ENGLISH

INSTRUCTION MANUAL

CONTENTS

1. SPECIFICATIONS 1

2. PREPARATION OF THE SEWING MACHINE 1

2-1. Installation 1
2-2. Lubrication 2
2-3. Attaching the needle 2
2-4. Attaching the needle bar cover 3
2-5. Attaching the button tray assembly 3
2-6. Threading the machine 3

3. ADJUSTMENT OF THE SAWING MACHINE 4

3-1. Thread tension adjustment 4
3-2. Adjustment of the thread pull-off lever 4
3-3. Adjusting the tension lever 4
3-4. Adjusting the nipper 5
3-5. Adjusting the thread tension guide on the face plate 5
3-6. Needle-to-looper relation 5
3-7. Position of the needle guide 6
3-8. Height of the button clamp 6
3-9. Work pressing force 6
3-10. Adjustment of the button clamp stop lever 6
3-11. Timing of thread tension release 7
3-12. Setting for 2- or 4-hole buttons 7
3-13. Setting a number of stitches 8
3-14. Adjusting the position of the stop-motion 8
3-15. Automatic thread trimmer 9
(1) Adjusting the position of the moving knife 9
3-16. Clearance between the button clamp lifting lever and the adjusting screw 9
3-17. How to set the L-shaped lifting rod 9
3-18. Knot-tying mechanisms 10
(1) Adjusting the knot-tying connecting plate 10
(2) Adjusting the knot-tying arm stopper 10
(3) Adjusting the knot-tying notch 10
(4) Changeover of with/without knot-tying 11

4. MAINTENANCE, SUBCLASS MODELS AND ATTACHMENTS 11

4-1. How to connect the metal fittings of the belt 11
4-2. Subclass models 11
4-3. Attachments 12
(1) Attachments for shank buttons (Pearl buttons) (Z033) 13
(2) Attachment for the first process of wrapped-around buttons (Z041) 13
(3) Attachment for the second process of wrapped-around buttons (Z035) 14
(4) Attachment for snaps (Z037) 14
(5) Attachment for metal buttons (Z038) 15
4-4. Motor pulley and belt 15

5. TROUBLES AND CORRECTIVE MEASURES 16

1. SPECIFICATIONS

	MB-1373	MB-1377
Sewing speed	Normal 1,300 rpm (Max. 1,500 rpm)	
Number of stitches	8, 16 and 32 stitches	
Feed amount	Lateral feed 2.5 to 6.5mm Longitudinal feed 0, 2.5 to 6.5mm	Lateral feed 2.5 to 6.5mm Longitudinal feed 0, 2.5 to 4.5mm
Button size	10 to 28 mm	
Needle used	TQx1 #16 (#14 to #20) TQx7 #16 (#14 to #20)	
Lubricating oil	JUKI New Defrix Oil No. 1	
Noise	Workplace-related noise at sewing speed n = 1,500 min–1 : Lpa ≦ 84 dB(A) Noise measurement according to DIN 45635-48-B-1.	

2. PREPARATION OF THE SEWING MACHINE

2-1. Installation

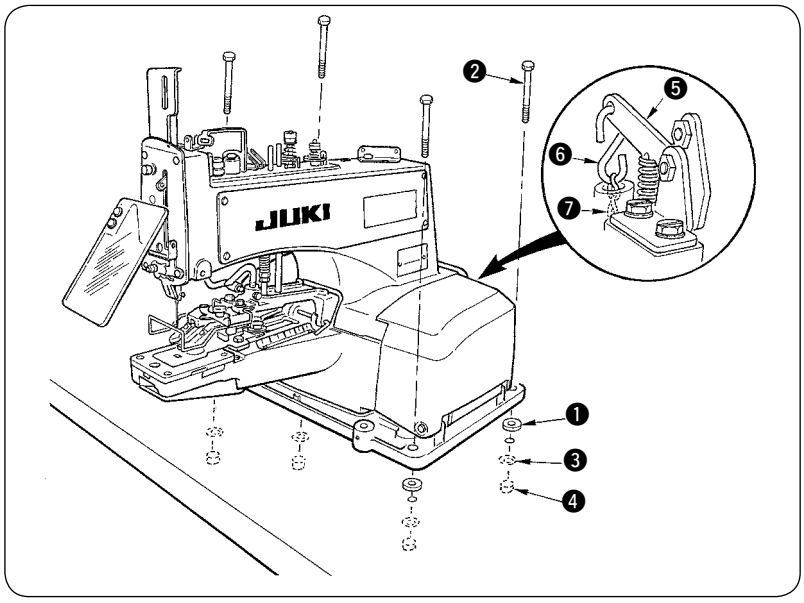

Put rubber cushion ❶ on the table, place the machine head on the rubber cushion and fix it to the table using screws ❷, plain washers ❸ and nuts ❹. Attach “S” chain hook ❻ and chain ❼ to stop motion trip lever ❺.

2-2. Lubrication

WARNING :
To protect against possible personal injury due to abrupt start of the machine, be sure to start the following work after turning the power off and ascertaining that the motor is at rest.

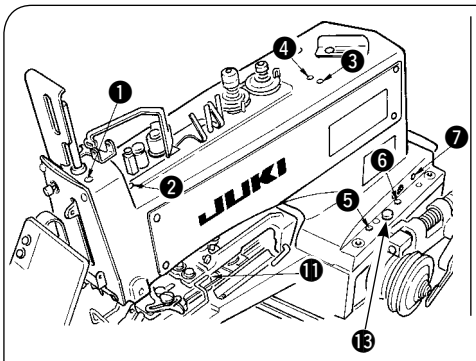

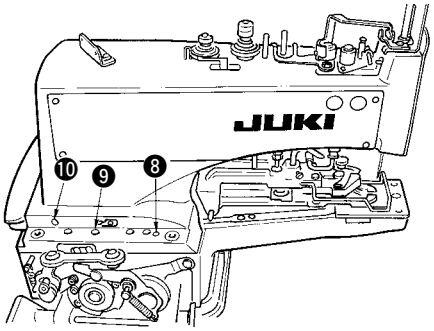

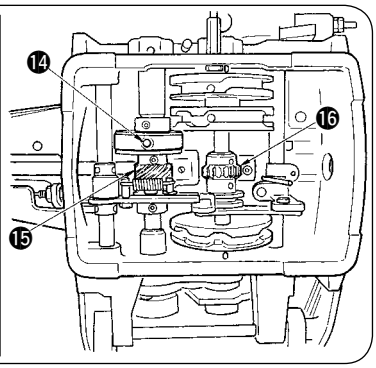

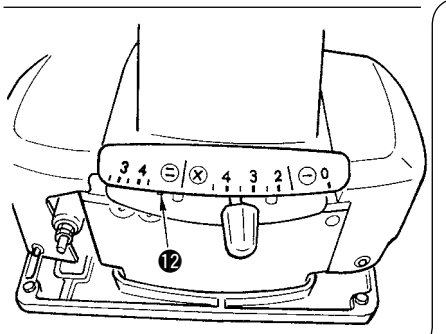

1) Open the side cover, and apply JUKI New Defrix Oil No. 1 to the portions shown by the red marks ❶ to ⓬ (❼ : MB-1377 only). (Apply approximately 1 cc of oil to the respective lubricating places one to two times a week.)
2) Loosen connecting screw ⓭, tilt the machine head backward and apply grease (JUKI designated grease) to crossed helical gear ⓯ and worm gear ⓰.
3) Check, approximately once a week, that oil amount is sufficient to reach the top of the oil felt placed inside the bed mounting base. If the amount of oil is insufficient, add an adequate amount of oil. At this time, also apply oil to crank rod ⓮.

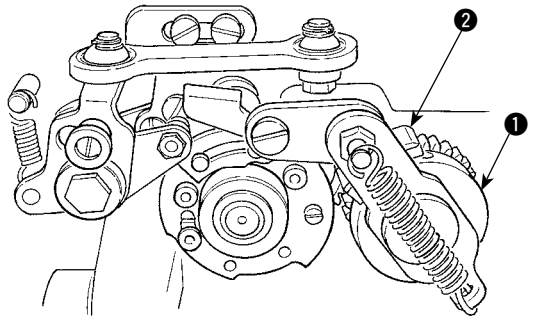

[Caution at the time of lubricating]

1. **Take care not to allow speed slowing friction wheel ❶ and friction plate ❷ to be clogged with oil to prevent them from the deterioration of retardation performance. In addition, when the components are clogged with oil, wipe the oil from them.**
2. **Take care not to allow the machine belt to be clogged with oil to prevent it from the deterioration.**

2-3. Attaching the needle

WARNING :
To protect against possible personal injury due to abrupt start of the machine, be sure to start the following work after turning the power off and ascertaining that the motor is at rest.

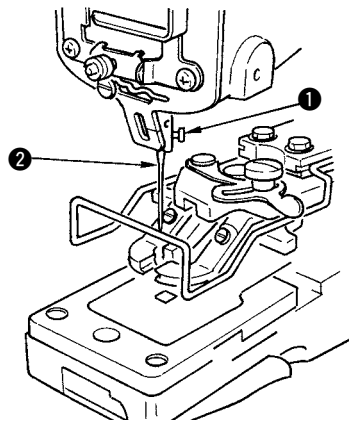

★ Use a standard needle of TQx1 #16.
Loosen setscrew ❶ and hold needle ❷ with the long groove facing toward you. Then fully insert it into the hole in the needle bar, and tighten setscrew ❶.

2-4. Attaching the needle bar cover

WARNING :
To protect against possible personal injury due to abrupt start of the machine, be sure to start the following work after turning the power off and ascertaining that the motor is at rest.

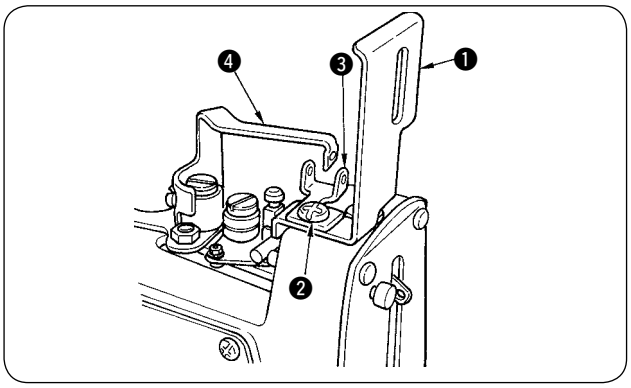

1) Loosen screw ❷ and remove thread guide ❸.
2) Place needle bar guard ❶ under thread guide ❸ and attach thread guide ❸ so that lever ❹ comes to the center of it at the start of the machine.
3) Fix the cover with screw ❷.

2-5. Attaching the button tray assembly

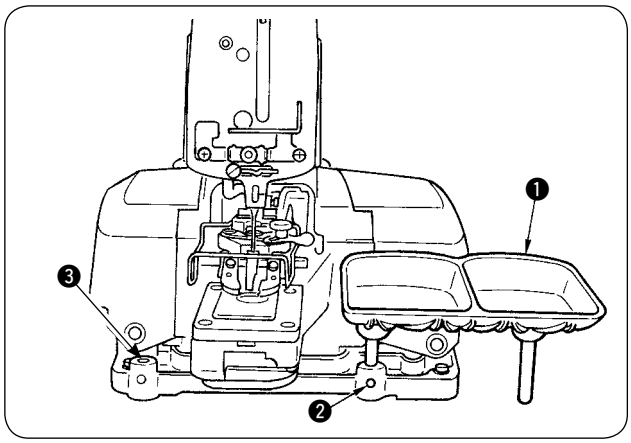

Insert the posts of button tray ❶ in hole on the right of the machine sub-base and tighten each setscrew ❷. If it is difficult for the operator to pick up the buttons on the right side, change it to hole ❸ on the left side.

2-6. Threading the machine

WARNING :
To protect against possible personal injury due to abrupt start of the machine, be sure to start the following work after turning the power off and ascertaining that the motor is at rest.

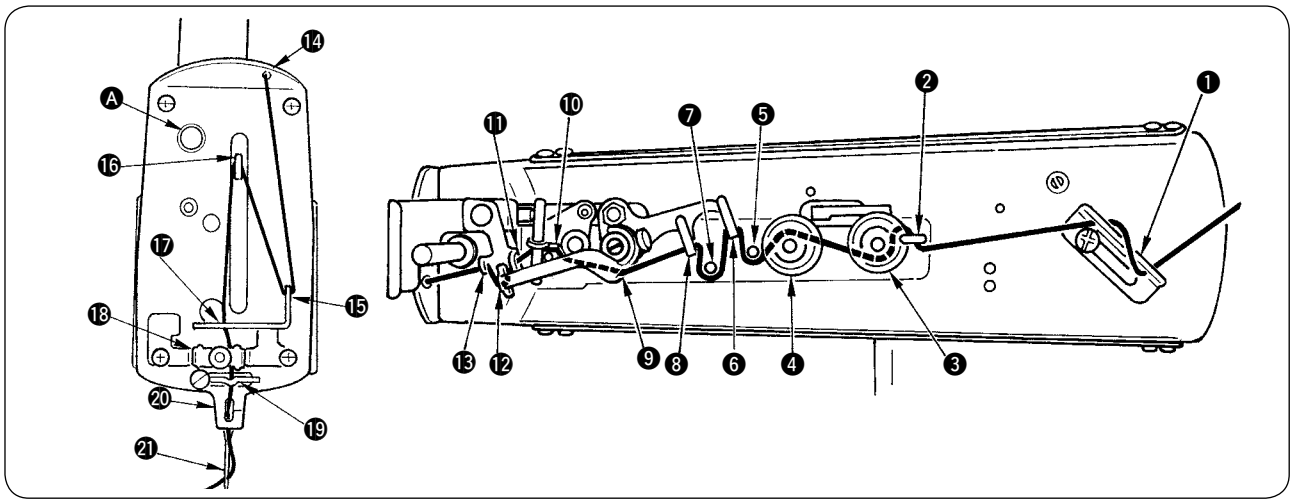

Thread the machine head in the order of ❶ to ㉑ as shown in the illustration given above. Then, pass the thread through the needle eye from the front for approximately 60 to 70 mm as you depress nipper releasing knurled thumb nut Ⓐ.

* Standard needle is TQ X 1 #16.

3. ADJUSTMENT OF THE SAWING MACHINE

3-1. Thread tension adjustment

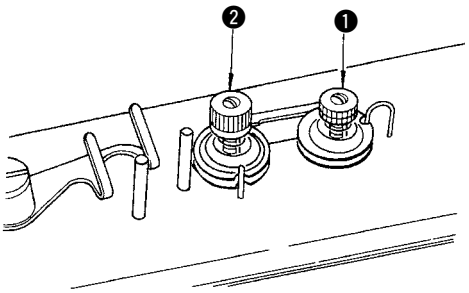

Tension post No. 1 ❶ is used to adjust the thread tension to sew on the button and a relatively low tension will be enough. Tension post No. 2 ❷ is used to adjust the thread tension applied to the root of the button sewing stitches. This tension must be determined according to the type of thread, fabric and thickness of the button and must be higher than that of tension post No. 1 ❶. Turn the tension nuts clockwise to increase or counterclockwise to reduce the thread tension.

3-2. Adjustment of the thread pull-off lever

WARNING :
To protect against possible personal injury due to abrupt start of the machine, be sure to start the following work after turning the power off and ascertaining that the motor is at rest.

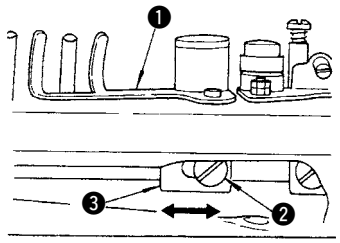

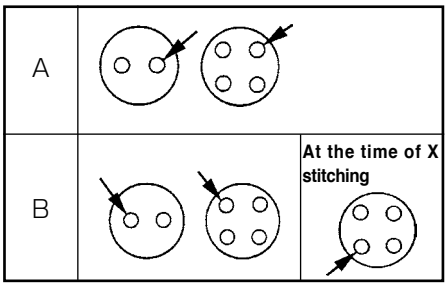

To adjust the thread pull-off lever ❶, insert a screwdriver through an opening in the machine arm side cover (left), loosen screw ❷ and adjust the position of nipper bar block (rear) ❸ to the left or the right. If the end of thread is drawn from arrow hole A in the button after sewing, change the position of nipper bar block (rear) ❸ to the left. Move the lever to the right when the thread end comes out from arrow hole B.

3-3. Adjusting the tension lever

WARNING :
To protect against possible personal injury due to abrupt start of the machine, be sure to start the following work after turning the power off and ascertaining that the motor is at rest.

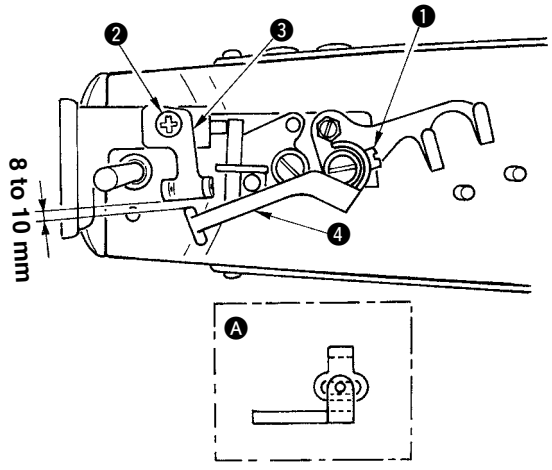

1) When the machine is in the stop-motion state, loosen screw ❶.
2) Tighten setscrew ❶ so that there is a clearance of 8 to 10 mm as a standard between the end of thread tension guide ❸ and end of lever ❹.

After the adjustment, make sure that the thread path is within the slot as illustrated in Fig. Ⓐ when the machine starts.
If the thread paths do not coincide with each other, loosen screw ❷ in the tension thread guide and adjust it properly.

3-4. Adjusting the nipper

WARNING :
To protect against possible personal injury due to abrupt start of the machine, be sure to start the following work after turning the power off and ascertaining that the motor is at rest.

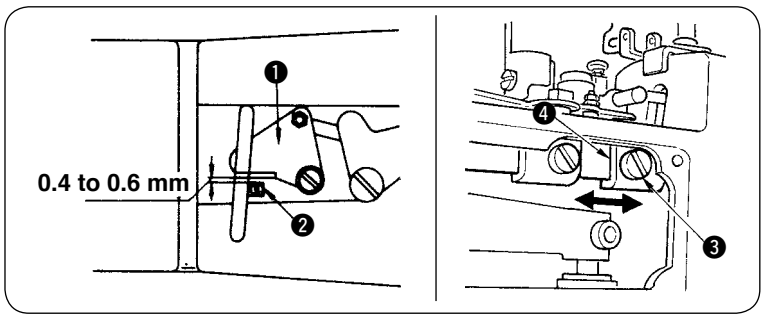

1) Provide a 0.4 to 0.6 mm clearance between nipper block ❷ and nipper ❶ to prevent the nipper ❶ from holding the thread while the machine is in operation.
2) Loosen screw ❸ and move nipper bar block ❹ to the right or the left.

3-5. Adjusting the thread tension guide on the face plate

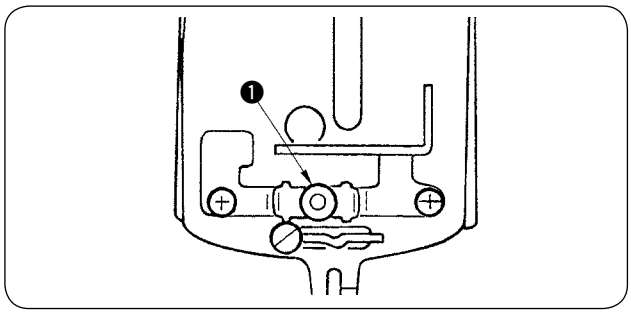

If the formation of seams at the start of sewing is failed and the seams are formed on the way even when the thread pull-off lever is adjusted, turn thumb nut ❶ (double nut) to decrease the thread tension.

3-6. Needle-to-looper relation

WARNING :
To protect against possible personal injury due to abrupt start of the machine, be sure to start the following work after turning the power off and ascertaining that the motor is at rest.

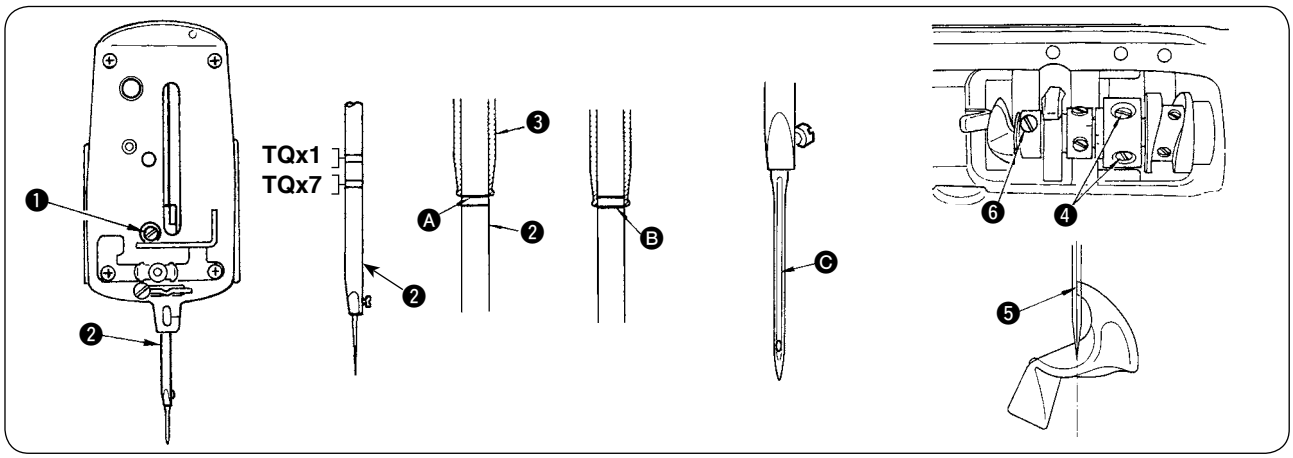

★ Adjust the needle-to-looper relation as follows :

1) Depress the pedal fully forward, turn the needle driving pulley in the normal sewing direction by hand to bring down the needle bar to the lowest position of its stroke and loosen screw ❶.

(Adjusting the needle bar height)

2) Adjust the height of the needle bar using the top two lines engraved on the needle bar ❷ for the TQx1 needle and using the bottom two lines for the TQx7 needle. Align the upper line Ⓐ with the bottom end face of needle bar bushing (lower) ❸ and tighten screw ❶. At this time, tighten the screw so that groove Ⓒ of the needle faces the front.

(Looper position)

3) Loosen screws ❹ and turn by hand the needle driving pulley until lower line Ⓑ of two lines aligns with the bottom end face of needle bar bushing (lower) ❸.
4) By keeping the machine in this state, align looper blade ❺ with the center of the needle and tighten screws ❹.
5) Loosen screws ❻ and provide a 0.01 to 0.1 mm clearance between the looper and the needle. Tighten screws ❻.

3-7. Position of the needle guide

WARNING :
To protect against possible personal injury due to abrupt start of the machine, be sure to start the following work after turning the power off and ascertaining that the motor is at rest.

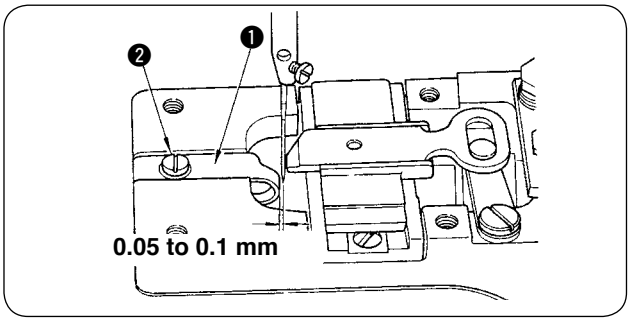

Loosen screw ❷ and provide a 0.05 to 0.1 mm clearance between the needle guide ❶ and the needle by moving the needle guide ❶ to the left or the right when the needle is in the lowest position.

3-8. Height of the button clamp

WARNING :
To protect against possible personal injury due to abrupt start of the machine, be sure to start the following work after turning the power off and ascertaining that the motor is at rest.

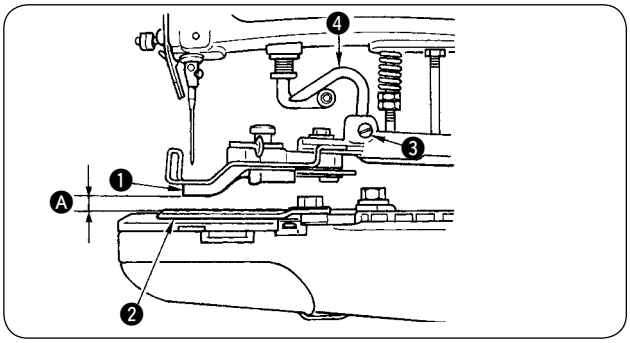

1) The standard clearance Ⓐ between the rear side of the bottom face of button clamp jaw lever ❶ and the top surface of feed plate ❷ is 8 mm at the position where the machine has stopped after sewing.
2) To adjust the height of the button clamp unit, loosen screw ❸ in the button clamp lifting hook and move button clamp lifting hook ❹ up or down.

3-9. Work pressing force

WARNING :
To protect against possible personal injury due to abrupt start of the machine, be sure to start the following work after turning the power off and ascertaining that the motor is at rest.

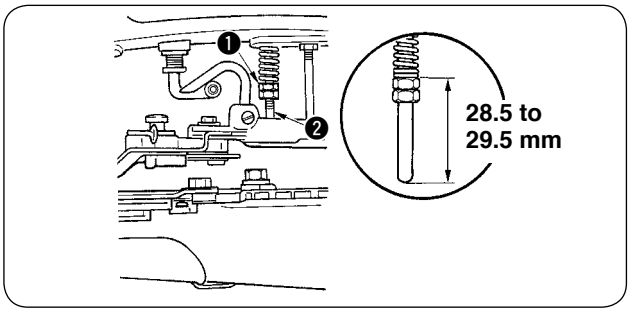

The standard work pressing force is by providing a 28.5 to 29.5 mm between the top end of nut ❶ and the bottom end of pressure adjusting bar ❷.
Turn nut ❶ to adjust it.

3-10. Adjustment of the button clamp stop lever

WARNING :
To protect against possible personal injury due to abrupt start of the machine, be sure to start the following work after turning the power off and ascertaining that the motor is at rest.

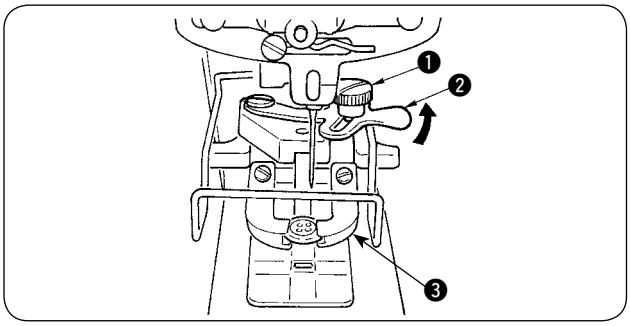

When clamp screw ❶ is loosened in the state of stop-motion, button clamp jaw levers ❸ opens/closes with button clamp stop lever ❷. Set a button to the correct position and fix button clamp stop lever ❷ at the position where taking in and out of the button is easily performed with clamp screw ❶.

3-11. Timing of thread tension release

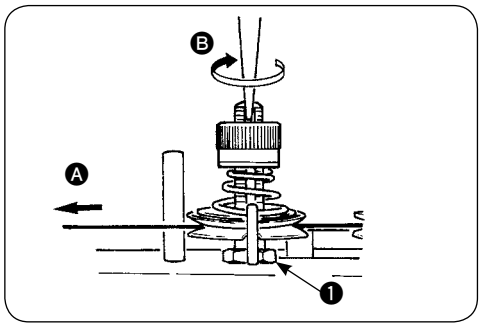

Turn the needle driving pulley as you draw the thread in the direction of arrow mark Ⓐ and you will find a point at which the tension discs on the tension post No. 2 release the thread. At this moment, the standard distance from the top end of the needle bar bushing (upper) to the top end of the needle bar is 44 to 47 mm (in case of the needle of TQ X 7, 54 to 57 mm).
Perform the following adjustments especially when the undermentioned troubles occur frequently.
Loosen nut ❶, insert the blade of a screwdriver to the top slot of the tension post No. 2 and turn it in the direction of arrow mark Ⓑ to lower the height of the thread floating bar and in the opposite direction to raise the height.

Phenomenon	Height of thread floating bar
1.When the stitch made on the wrong side of the workpiece is too loose ;	Make the needle bar slightly higher.
2.When the thread is broken at the time of stop-motion ;	Make the needle bar slightly lower.
3.When the thread is broken frequently ;	Make the needle bar slightly lower.

3-12. Setting for 2- or 4-hole buttons

WARNING :
To protect against possible personal injury due to abrupt start of the machine, be sure to start the following work after turning the power off and ascertaining that the motor is at rest.

MB-1377

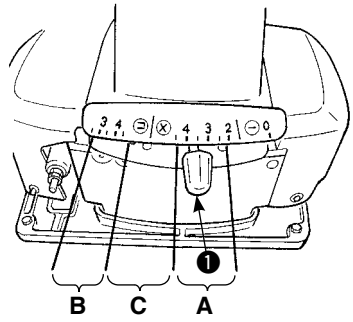

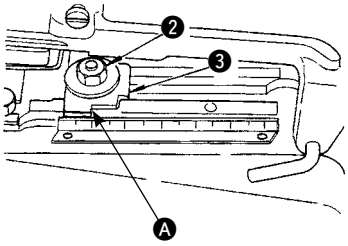

Perform the adjustment after confirming that the sewing machine is located at the position of the stop-motion (refer to "3-14. Adjusting the position of the stop-motion", p.8.).

Measure the distance between two holes in a button and set equally crosswise and lengthwise feed regulators for 4-hole buttons.

[In case of MB-1373]

★ Lengthwise feed

Push down lengthwise feed adjusting lever ❶ and set it to “0” for 2-hole buttons or a corresponding amount for 4-hole buttons.

★ Crosswise feed

Loosen nut ❷ and set section Ⓐ of pointer ❸ to a corresponding amount. Then tighten nut ❷.

[In case of MB-1377]

★ Lengthwise feed

Push down lengthwise feed adjusting lever ❶ and set it to "0" for -2-hole buttons or a corresponding amount for 4-hole buttons by the respective procedures below according to the sewing methods.

X stitch : Set the lengthwise feed adjusting lever to the position corresponding to the amount for the button within the range of **A**.

U-sharp stitch : Set the lengthwise feed adjusting lever to the position corresponding to the amount for button within the range of **B**.

When setting the lengthwise feed adjusting lever to the position of C (outside of range of setting the lever), not only the sewing cannot be performed but also trouble will be caused. Do not set the feed adjusting lever at the position of C.

★ Crosswise feed

Loosen nut ❷ and set section Ⓐ of pointer ❸ to a corresponding amount. Then tighten nut ❷.

Before operating the machine, ensure that the needle enters the center of each hole in the button.

3-13. Setting a number of stitches

WARNING :
To protect against possible personal injury due to abrupt start of the machine, be sure to start the following work after turning the power off and ascertaining that the motor is at rest.

To change the number of stitches, open the left-hand side cover and change the number of stitches using stitch number adjusting screw ❶ and stitch number adjusting lever ❹ (optional).

★ How to adjust 8 stitches

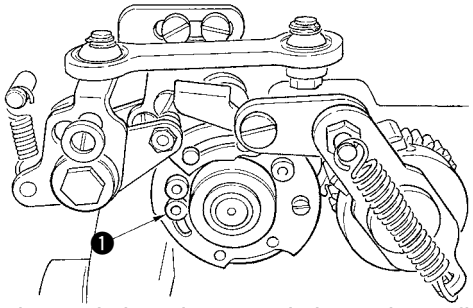

To make 8 stitches, loosen stitch number adjusting screw ❶ and fix it to the position as shown in the illustration.

★ How to adjust 16 stitches

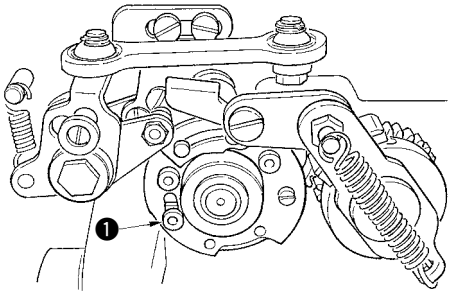

When stitch number adjusting screw ❶ being set for "8 stitches" has arrived at the left end, loosen stitch number adjusting screw ❶ and fix it to the position as shown in the illustration.

★ How to adjust 32 stitches

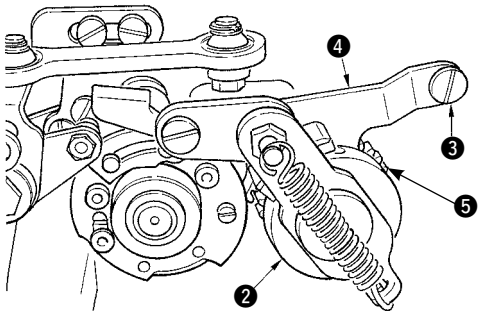

In the state of 16 stitches, stitch number adjusting gear roller ❷ which is attached to the large gear ❺ comes to the lower side, assemble stitch number adjusting lever ❹ (supplied as accessories) using hinge screw ❸ (supplied as accessories).

3-14. Adjusting the position of the stop-motion

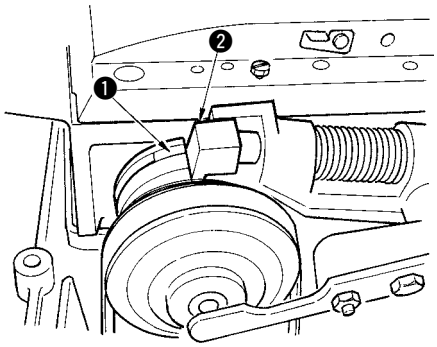

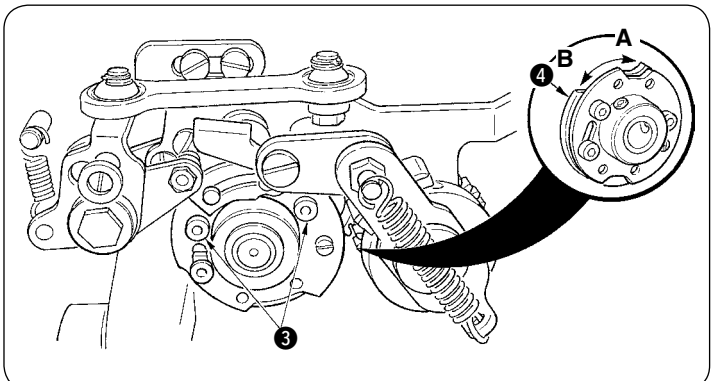

Adjust so that claw ❶ of the stop-motion cam comes in contact with stop-motion hook ❷ when the sewing machine completes the sewing and stops.

When replacing the motor pulley and changing the sewing speed from 1,300 rpm to 1,500 rpm, and vice versa, be sure to re-adjust the position of the stop-motion.

[Adjusting procedure]

- **When the stop-motion hook comes in contact with the stop-motion cam and rebounds, (When there is a clearance between claw ❶ and stop-motion hook ❷)**

loosen two stop-motion position adjusting screws ❸, turn stop-motion adjusting cam ❹ in the direction of **A**, and fix stop-motion position adjusting screws ❸.

- **When the stop-motion hook stops before it comes in contact with the stop-motion cam claw**

Loosen two stop-motion position adjusting screws ❸, turn stop-motion adjusting cam ❹ in the direction of **B**, and fix stop-motion position adjusting screws ❸.

3-15. Automatic thread trimmer

(1) Adjusting the position of the moving knife

WARNING :
To protect against possible personal injury due to abrupt start of the machine, be sure to start the following work after turning the power off and ascertaining that the motor is at rest.

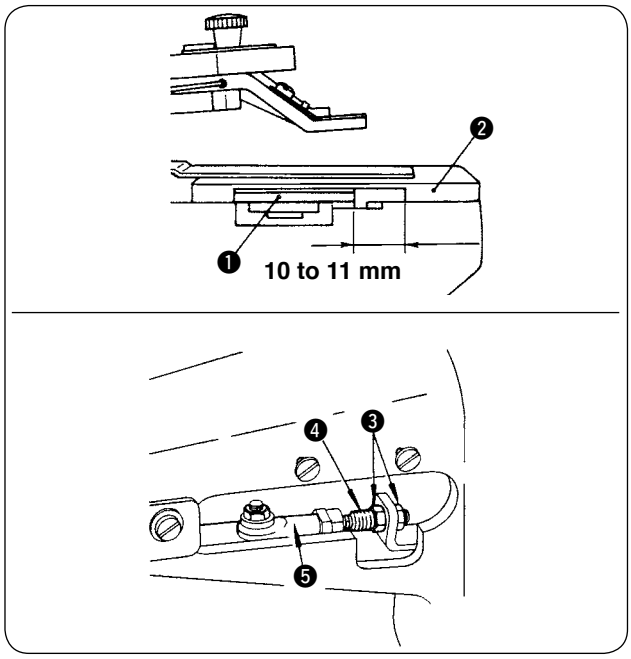

When the presser has completely lifted at the stop-motion position (**refer to "3-14. Adjusting the position of the stop-motion", p.8**), it is the standard that the clearance between thread trimming connecting plate (front) ❶ and the end face of the slit of throat plate ❷ is 10 to 11 mm. To adjust the aforementioned clearance, tilt the machine head, remove the oil shield, loosen two nuts ❸ and move connecting screw ❹ back or forth. When you tighten nuts ❸, ensure that joint ❺ stays in the horizontal position.

3-16. Clearance between the button clamp lifting lever and the adjusting screw

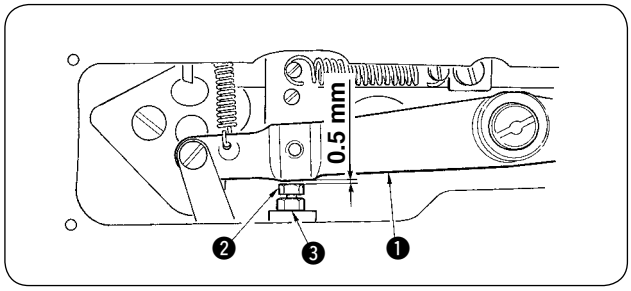

Provide a 0.5 mm clearance between the end face of button clamp lifting lever ❶ and adjusting screw ❷ at the stop-motion position (**refer to "3-14 Adjusting the position of the stop-motion", p.8**) and tighten with adjusting screw nut ❸.

3-17. How to set the L-shaped lifting rod

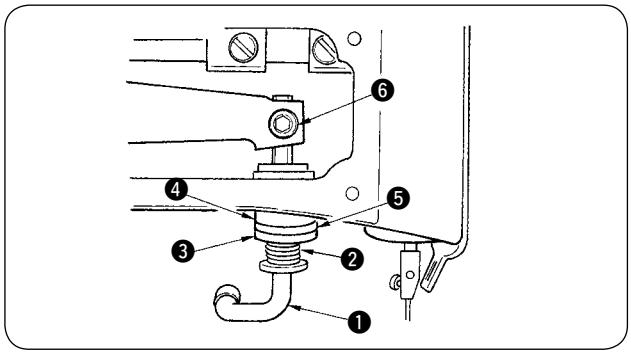

Put moving knife push-back spring ❷, stop-motion rubber cushion washer ❸, stop-motion rubber cushion ❹ and stop-motion rubber cushion washer ❺, in this order, to L-shaped lifting rod ❶. Make the jaw of the machine arm come into close contact with the end face of the stop-motion rubber cushion washer at the stop-motion position (**refer to "3-14 Adjusting the position of the stop-motion", p.8**) and set the L-shaped lifting rod without a play. Then tighten it with screw ❻.

3-18. Knot-tying mechanisms

WARNING :
To protect against possible personal injury due to abrupt start of the machine, be sure to start the following work after turning the power off and ascertaining that the motor is at rest.

(1) Adjusting the knot-tying connecting plate

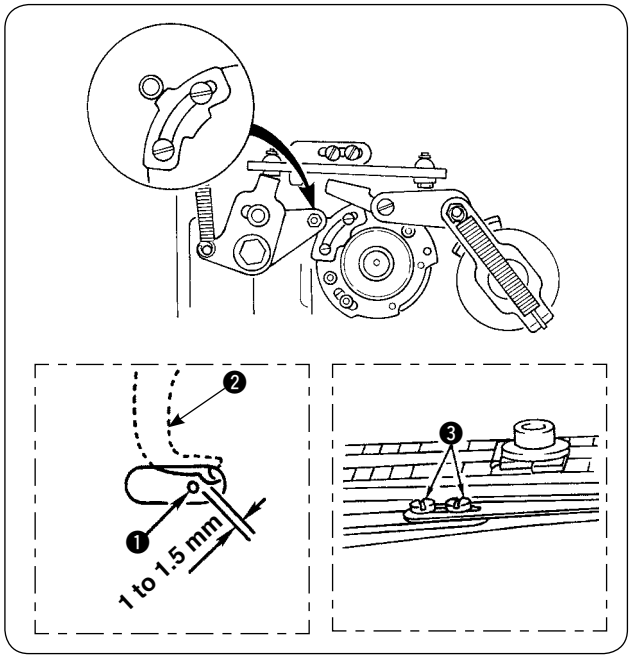

Loosen screws ❶ and adjust so that a clearance of 1 to 1.5 mm is provided between the needle ❷ and the knot tying plate ❸ when the roller of the knot-tying arm gets on the outmost periphery of the knot-tying notch.

After the adjustment, ascertain that the needle does not come in contact with the knot-tying plate.

(2) Adjusting the knot-tying arm stopper

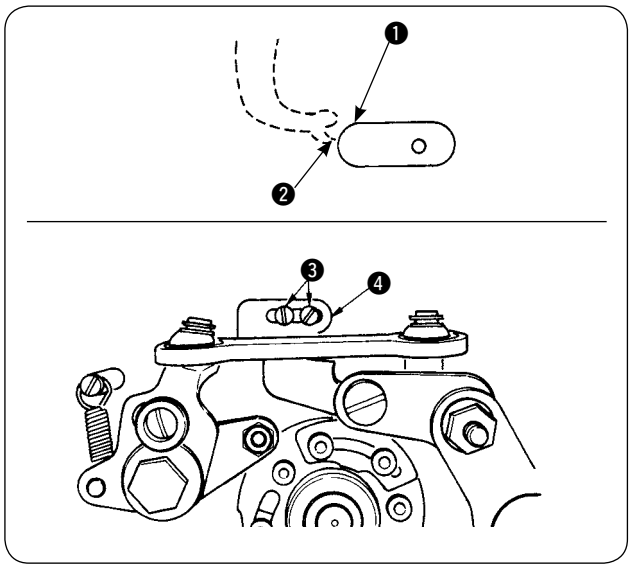

When starting the sewing machine and the roller of knot-tying arm does not come into contact with the knot-tying notch, loosen screws ❸ and adjust with stopper ❹ so that outside periphery ❶ of the needle hole almost aligns with top end ❷ of the knot-tying plate.

(3) Adjusting the knot-tying notch

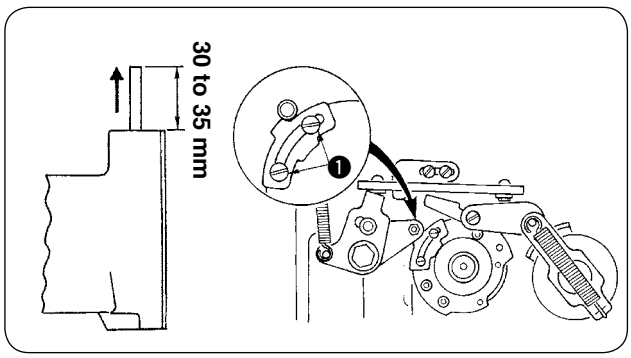

Loosen screws ❶ and adjust so that the roller of the knot-tying arm comes in contact with the knot-tying notch when the needle bar goes up at the fourteenth stitch as high as 30 to 35 mm (40 to 45 mm when a TQ x 7 needle is used) above the needle bar upper bushing.

If two knot-tying notches are to be installed (without crossover stitch), make the aforementioned adjustment at the 6th and 14th stitches.

(4) Changeover of with/without knot-tying

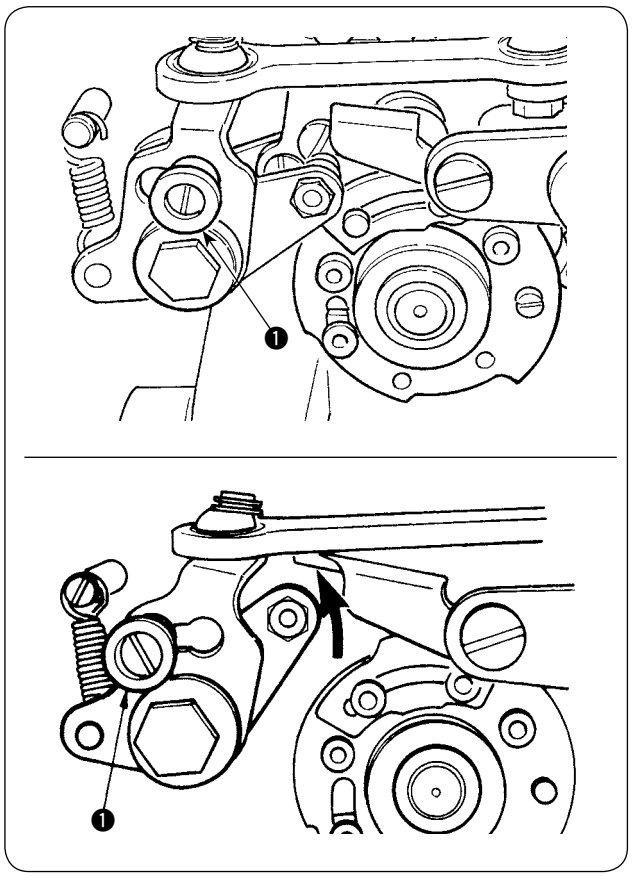

To make “with knot-tying”, pull knot-tying changeover knob ❶ toward the front and place it to the position in the figure.

To make “without knot-tying”, pull knot-tying changeover knob ❶ toward the front and place it to the position in the figure.

4. MAINTENANCE, SUBCLASS MODELS AND ATTACHMENTS

4-1. How to connect the metal fittings of the belt

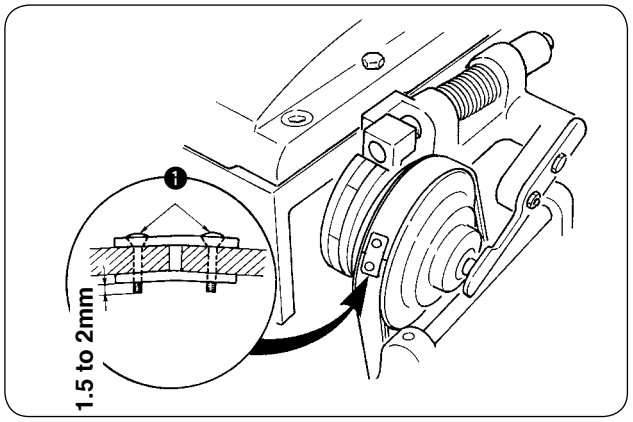

Tighten connecting screws ❶ of the belt so that the screws protrude approximately 1.5 to 2 mm from the reverse side as the standard.

1. When assembling the belt to the pulley and rotating the motor after closing the side cover, confirm that the side cover does not interfere with the metal fitting of the belt.
2. Take care not to allow the belt to be clogged with oil when assembling it.

4-2. Subclass models

MB-1373	MB-1373-11
8, 16, 32 stitches	8, 16, 32 stitches
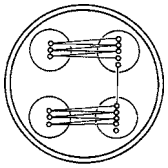	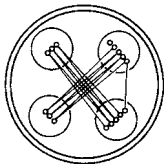

4-3. Attachments

WARNING :
To protect against possible personal injury due to abrupt start of the machine, be sure to start the following work after turning the power off and ascertaining that the motor is at rest.

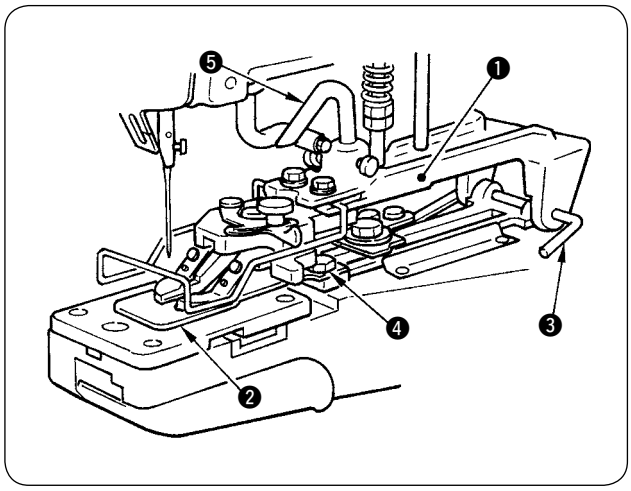

1) In order to install the attachment on the machine, you may have to remove button clamp mechanism ❶ or feed plate ❷.
2) Detach the snap ring from button clamp installing stud ❸, and you will be able to remove button clamp mechanism assembly ❶. Remove screw ❹, and you can remove feed plate ❷.

The only feature that makes the difference between the attachment of MB-373NS and that of MB-377NS is button clamp lifting hook ❺.

Use	Flat buttons		Shank buttons	Snaps
	Large-size	Medium-size	General	
MB-1373 MB-1377	Z201	Z202	Z033	Z037
Schematic drawing	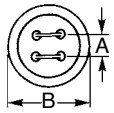	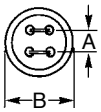	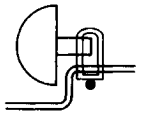	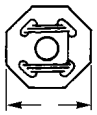
Remarks	Button size : A : 3 to 6.5 mm B : ø20 to ø28 mm	Button size : A : 3 to 5 mm B : ø12 to ø20 mm	Button diameter : Less than 16 mm Shank size : Thickness : 6 to 5 mm Width : 3 to 2.5 mm	Snap size : A : 8 mm

Use	Wrapped-around buttons		Metal buttons	Stay button	Labels
	First process	Second process	General		
MB-1373 MB-1377	Z041	Z035	Z038	Z039	Z044
Schematic drawing	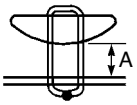	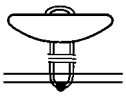	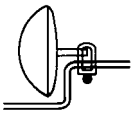	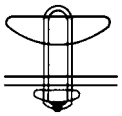	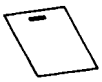
Remarks	Thread shank height A : 5.5 mm			Common to Z041	Stitch width : 3 to 6.5 mm

(1) Attachments for shank buttons (Pearl buttons) (Z033)

WARNING :
To protect against possible personal injury due to abrupt start of the machine, be sure to start the following work after turning the power off and ascertaining that the motor is at rest.

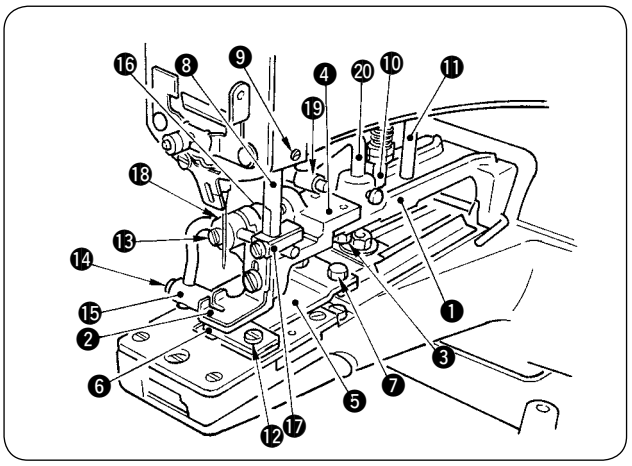

(INSTALLATION)

Remove both the button clamp mechanism assembly and the feed plate from the machine and install attachment ❶ in place. Loosen screws ❸ and adjust button clamp bracket ❹ to permit the needle to come down in the middle of the needle slot in shank button adaptor ❷. Attach button clamp feed plate ❺ using screws ❼ in the way that it permits the needle to come down in the middle of the needle slot in feed plate ❻. Insert the top end of button clamp stud ❽ into an opening in the jaw of the machine arm and fasten it by screw ❾.

(ADJUSTMENT AND OPERATION)

1) Loosen screw ⓬, let feed plate ❻ recede 0.5 to 1.0 mm from the left end of button clamp jaw lever ❷ and retighten screw ⓬.
2) Set a button in place, loosen screws ⓭ and ⓮ and align shank button holding clamp ⓯ with the center of the button.
3) Shank button holding clamp ⓯ must give proper pressure to the button so that the button stays steadily in position while being sewn. Loosen a setscrew in thrust collar ⓰ and rotate the thrust collar until shank button holding clamp ⓯ provides proper pressure.
4) You may fix button clamp block ⓱ in a convenient position for operation.

Caution

1. When you fix the thrust collar, ensure that button clamp rotating shaft ⓲ does not play axially in its bracket.
2. Adjust lifting hook ⓴ and stopper pin ⓫ so that L-shaped lifting rod roller ⓳ does not come in contact with button clamp bracket ❹.

(2) Attachment for the first process of wrapped-around buttons (Z041)

WARNING :
To protect against possible personal injury due to abrupt start of the machine, be sure to start the following work after turning the power off and ascertaining that the motor is at rest.

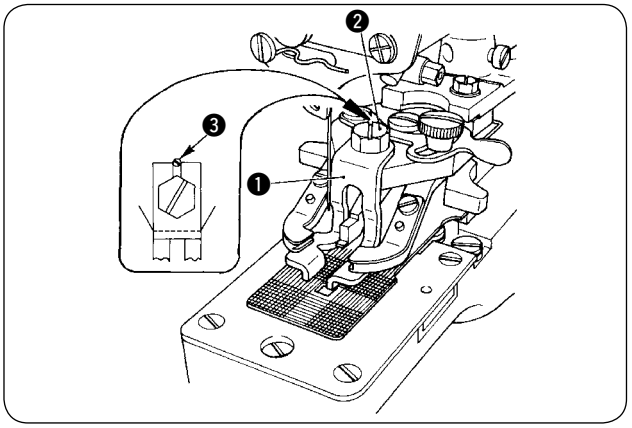

(INSTALLATION)

Attach wrapped-around button foot ❶ to the ordinary button clamp jaw levers using screw ❷ and guide pin screw ❸.
Align foot ❶ with the jaw levers so that they permit a button to rest in the middle.

(ADJUSTMENT AND OPERATION)

Adjustment and operation are almost same as those for the flat buttons, but you must adjust the thread pull-off lever to provide more amount of thread in order to make the thread loose below the button for thread shank formation. (**refer to "3-2. Adjustment of the thread pull-off lever", p.4**)

(3) Attachment for the second process of wrapped-around buttons (Z035)

WARNING :
To protect against possible personal injury due to abrupt start of the machine, be sure to start the following work after turning the power off and ascertaining that the motor is at rest.

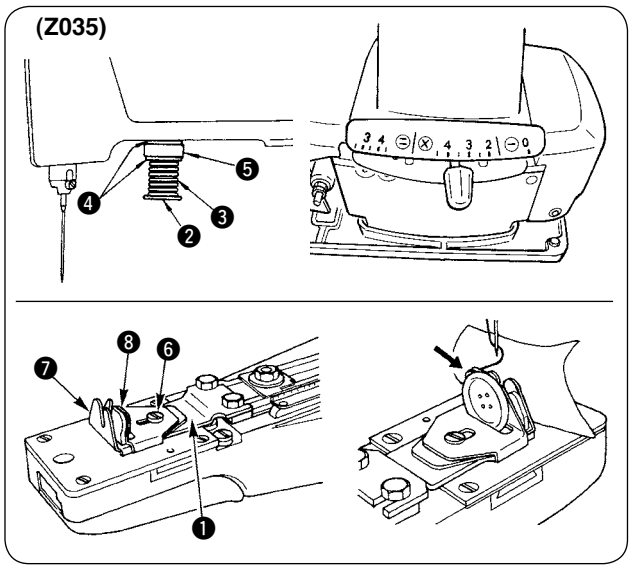

(INSTALLATION)

Remove the button clamp mechanism assembly, button clamp pressure adjusting bar and feed plate from the machine and install attachment for the second process of wrapped-around buttons ❶. When you install a Z035 attachment, you must remove also the L-shaped lifting rod.

Insert moving knife push-back spring ❸, washer ❹, cushion ❺ and washer ❹ in spring guide shaft ❷ in this order. Make certain that the stop-motion mechanism has completely engaged, and install the attachment assembly in place in the way that cushion ❺ comes in close contact with the surface of the machine arm without play.

(ADJUSTMENT AND OPERATION)

1) Loosen screw ❻ and adjust the thread shank length by moving guide (large) ❼ and guide (small) ❽ in line with the point of needle entry.
2) Set a button (tilt it slightly for easy insertion) and pass the thread as the arrow shows.
3) Set the lengthwise feed to “0”.

(4) Attachment for snaps (Z037)

WARNING :
To protect against possible personal injury due to abrupt start of the machine, be sure to start the following work after turning the power off and ascertaining that the motor is at rest.

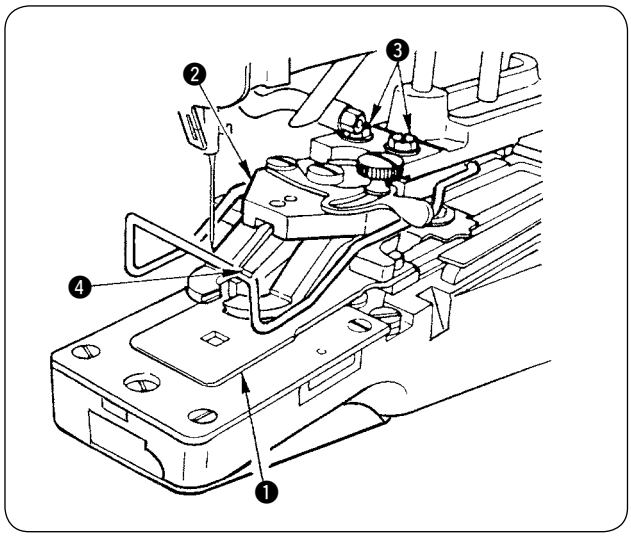

(INSTALLATION)

Remove the button clamp mechanism assembly and the feed plate. Set both the crosswise feed and lengthwise feed graduated plates to “4 mm”. Install snap clamp feed plate ❶ in the way that the needle drops evenly at four corners of its square opening. Install snap attachment assembly ❷ on the machine, place a snap on the snap clamp jaw levers and make sure that the needle drops accurately in each hole in the snap. If necessary. loosen hex head screws ❸ and adjust the position accurately. Lastly, make sure that the concave section on the bottom face of snap clamp slide guide ❹ accurately matches the convex section on snap clamp feed plate ❶.

(5) Attachment for metal buttons (Z038)

WARNING :
To protect against possible personal injury due to abrupt start of the machine, be sure to start the following work after turning the power off and ascertaining that the motor is at rest.

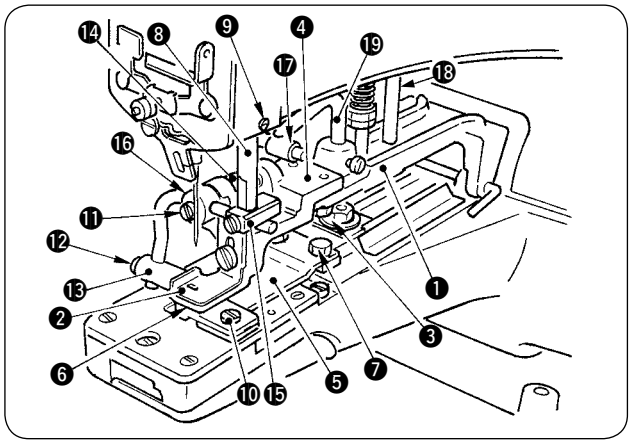

(INSTALLATION)

Remove both the button clamp mechanism assembly and the feed plate from the machine and install attachment ❶ in place. Loosen screws ❸ and adjust button clamp bracket ❹ to permit the needle to come down in the middle of the needle slot in metal button adaptor ❷. Attach button clamp feed plate ❺ using screws ❼ in the way that it permits the needle to come down in the middle of the needle slot in feed plate ❻. Insert the top end of button clamp stud ❽ into an opening in the jaw of the machine arm and fasten it by screw ❾.

(ADJUSTMENT AND OPERATION)

1) Loosen screw ⓾, let feed plate ❻ recede 1.0 to 1.5 mm from the left end of button clamp jaw lever ❷ and retighten screw ⓾.
2) Set a button in place, loosen screws ⓫ and ⓬ and align metal button holding clamp ⓭ with the center of the button.
3) Metal button holding clamp ⓭ must give proper pressure to the button so that the button stays steadily in position while being sewn. Loosen a setscrew in thrust collar ⓮ and rotate the thrust collar until metal button holding clamp ⓭ provides proper pressure.
4) You may fix button clamp block ⓯ in a convenient position for operation.

Caution
1. **When you fix the thrust collar, ensure that button clamp rotating shaft ⓰ does not play axially in its bracket.**
2. **Adjust lifting hook ⓳ and stopper pin ⓲ so that L-shaped liting rod roller ⓱ does not come in contact with button clamp bracket ❹.**

4-4. Motor pulley and belt

1) For this machine a single-phase or 3-phase 200 watts (1/4 HP) induction motor is used.
2) Use a V belt.
3) The sewing speed depends on the diameter of the motor pulley as listed below ;

Hz	rpm	Motor pulley part No.	mm 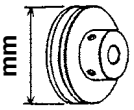
50	1500	40038291	ø 76
	1300	40038298	ø 64.5
60	1500	40038298	ø 64.5
	1300	40042229	ø 57

★ The pulley of 50Hz and 1,300 rpm is in common with that of 60Hz and 1,500 rpm.
★ The rotating direction of motor is counterclockwise when viewed from the motor pulley side. Be careful not to rotate in reverse direction.
★ When replacing the motor pulley and changing the sewing speed from 1,300 rpm to 1,500 rpm and vice versa, be sure to re-adjust the position of the stop-motion. (Refer to **"3-14. Adjusting the position of the stop-motion", p.8**.)

5. TROUBLES AND CORRECTIVE MEASURES

TROUBLES	CAUSES	CORRECTIVE MEASURES
1. Thread breakage	① The yoke slide does not move in the correct way.	○ Adjust the timing of forward, backward and sideways of the yoke slide.
	② The tension lever has been improperly adjusted.	○ Properly adjust the tension lever.
	③ The thread tension post No. 2 fails to release the thread at correct timing.	○ Make the thread release timing slightly earlier.
	④ Lifting amount of the button clamp jaw unit is excessive.	○ Adjust the lifting amount of the button clamp jaw lever to 8 mm.
	⑤ The thread nipper catches the thread. The nipper has been improperly adjusted. (The clearance is too small.)	○ Adjust the position of the nipper bar block.
	⑥ The needle does not enter the center of the holes in the button.	○ Adjust the button clamp jaw lever holder.
	⑦ The needle is too thick for the diameter of the hole in the button.	○ Replace the needle by a thinner one.
2. The machine forms a seam after it has run for a while instead of forming it from the start of sewing.	① The thread pull-off lever has been improperly adjusted.	○ Adjust the thread tension guide on the face plate so that it provides a lower tension.
	② Tension of the thread tension guide on the face plate is excessive.	○ Properly adjust the tension lever.
3. Buttons are not sewn tightly	① The yoke slide does not move in the correct way.	○ Adjust the timing of the motion of the yoke slide at each end.
	② The thread tension post No. 2 fails to release the thread at correct timing.	○ Make the thread release timing slightly later.
	③ The thread tension post No. 2 does not give sufficient tension.	○ Tighten the tension nut of tension post No. 2.
	④ The needle does not enter the center of the holes in the button.	○ Adjust the button clamp jaw lever holder.
	⑤ The work pressing force is too high or too low.	○ Adjust the work pressing force properly.
4. The last back-tack stitch is poorly tensed.	① The tension lever has been improperly adjusted.	○ Properly adjust the tension lever.
	② Timing of the knot-tying plate is incorrect.	○ Advance the timing of the knot-tying plate. (Adjustment of the knot-tying notch)
	③ The nipper has been improperly adjusted. (The clearance is too large.)	○ Adjust the nipper with the nipper bar block.
5. The first stitch trails relatively long thread from the right side of the button.	The thread pull-off lever does not work properly.	○ Adjust the thread pull-off lever by the nipper bar block (rear).
6. Thread trimming failure in the state of stop-motion	① The thread tension post No. 2 fails to release the thread at correct timing.	○ Make the thread release timing slightly later to give more tension to the stitches.
	② The needle hits the edge of the holes in the button.	○ Adjust the button clamp jaw lever holder.
	③ The thread nipper fails to press the thread.	○ Adjust the nipper bar block.
	④ The work pressing force is too high.	○ Adjust the work pressing force by the pressure adjusting nut.
7. Thread trimming failure	① The moving knife does not separate the thread on the fabric with its separation nail.	○ Adjust the position of the moving knife.
	② The needle does not enter the center of the holes in the button.	○ Adjust the button clamp jaw lever holders.
	③ The last stitch skips.	○ Adjust the looper.
	④ The moving knife thread separation nail is too high or too low.	○ Adjust the height of the moving knife thread separation nail.
8. The needle thread is cut in two places on the wrong side of the fabric.	① The moving knife is set in wrong place.	○ Adjust the position of the moving knife when the machine is in the stop-motion state.
	② The moving knife thread separation nail is too high or too low.	○ Adjust the height of the thread separation nail.
9. Button trails too long thread after thread trimming.	① Timing of the moving knife motion is wrong.	○ Adjust the position of the moving knife. when the machine is in the stop-motion state.
	② Lifting amount of the button clamp jaw unit is excessive.	○ Adjust the lifting amount of the button clamp jaw lever to 8 mm.
10. Length of thread remaining, after thread trimming, on the wrong side of the material varies.	① Position of the moving knife is not correct.	○ Adjust the position of the moving knife when the machine completes stop-motion. (10 to 11 mm)
	② Lifting amount of the button clamp jaw unit is excessive.	○ Adjust the lifting amount of the button clamp jaw lever to 8 mm.