PFAFF® Industrial

1163

ADJUSTMENT MANUAL

This Adjustment Manual is valid for machines from the following serial numbers onwards:
6 001 000 →

296-12-19 175/002
Justieranleitung engl. 03.12

The reprinting, copying or translation of PFAFF Service Manuals, whether in whole or in part, is only permitted with our previous authorization and with written reference to the source.

PFAFF Industriesysteme
und Maschinen AG

Hans-Geiger-Str. 12 - IG Nord
D-67661 Kaiserslautern

Contents .....Page

1	**Adjustment**	**4**
1.01	Notes on adjustment	4
1.02	Tools, gauges and other accessories for adjusting	4
1.03	Abbreviations	4
1.04	Explanation of the symbols	4
1.05	Adjusting the basic machine	5
1.05.01	Pre-adjusting the needle height	5
1.05.02	Setting the bottom feed dog at its neutral position	6
1.05.03	Bottom feed dog motion	7
1.05.04	Bottom feed dog position	8
1.05.05	Needle rise, hook clearance, needle height and bobbin case position finger	9
1.05.06	Thread check spring and thread regulator	10
1.05.07	Knee lever stop	11
1.05.08	Presser foot pressure	12
1.06	Adjusting the thread trimmer -900/93	13
1.06.01	Adjusting the synchronizer	13
1.06.02	Adjusting the control cam	14
1.06.03	Position of the stationary knife	15
1.06.04	Needle thread tension release	16
1.07	Adjusting the thread wiper -909/93	17
1.08	Adjusting the automatic presser foot lift -910/93	18
1.09	Adjusting the backtacking mechanism -911/93	19
1.10	Parameter settings (for MH-4-7W-215-CE)	20
2	**Block diagram PFAFF 1163 with MH-4-7W-215-CE**	**21**

1 Adjustment



Please observe all notes from Chapter **1** Safety of the instruction manual! In particular care must be taken to see that all protective devices are refitted properly after adjustment, see Chapter **1**.**06** Danger warnings of the instruction manual!
If not otherwise stated, the machine must be disconnected from the electrical power supply.
Danger of injury due to unintentional starting of the machine!

1.01 Notes on adjustment

All following adjustments are based on a fully assembled machine and may only be carried out by expert staff trained for this purpose. Machine covers, which have to be removed and replaced to carry out checks and adjustments, are not mentioned in the text.
The order of the following chapters corresponds to the most logical work sequence for machines which have to be completely adjusted. If only specific individual work steps are carried out, both the preceding and following chapters must be observed.
Screws, nuts indicated in brackets ( ) are fastenings for machine parts, which must be loosened before adjustment and tightened again afterwards.

1.02 Tools, gauges and other accessories for adjusting

- 1 set of screwdrivers with blade widths from **2** to **10 mm**
- 1 set of wrenches with jaw widths from **7** to **14 mm**
- 1 set of Allan keys from **1.5** to **6 mm**
- 1 metal rule, (Part No. **08-880 218-00**)
- Needle-rise gauge (Part No. **61-111 600-01**)
- Screw clamp (Part No. **61-111 600-35**

1.03 Abbreviations

TDC = top dead center
BDC = bottom dead center

1.04 Explanation of the symbols

In this adjustment manual, symbols emphasize operations to be carried out or important information. The symbols used have the following meaning:



Note, information

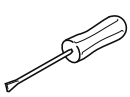

Service, repair, adjustment, maintenance
(work to be carried out by qualified staff only)

1.05 Adjusting the basic machine

1.05.01 Pre-adjusting the needle height

Requirement
With the needle bar at TDC, the distance between the needle point and the needle plate must be **16** mm.

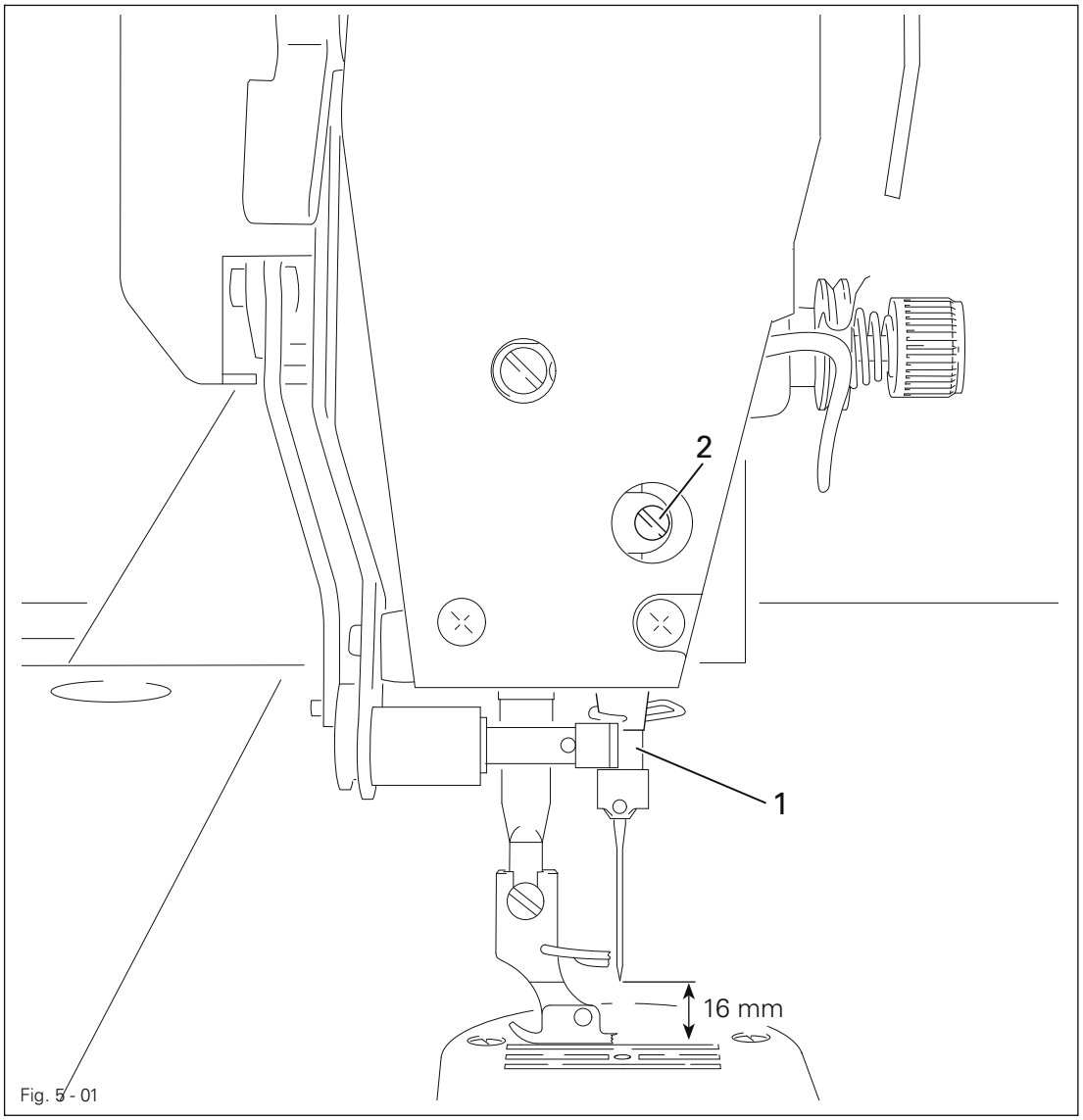

Fig. 5 - 01

- Without twisting it, adjust needle bar **1** (screw **2**) in accordance with the **requirement**.

1.05.02 Setting the bottom feed dog at its neutral position

Requirement
With the stitch length set at "**0**", cranks **1** and **3** should be in alignment, and there should be no feeding motion of the bottom feed dog when the balance wheel is turned.

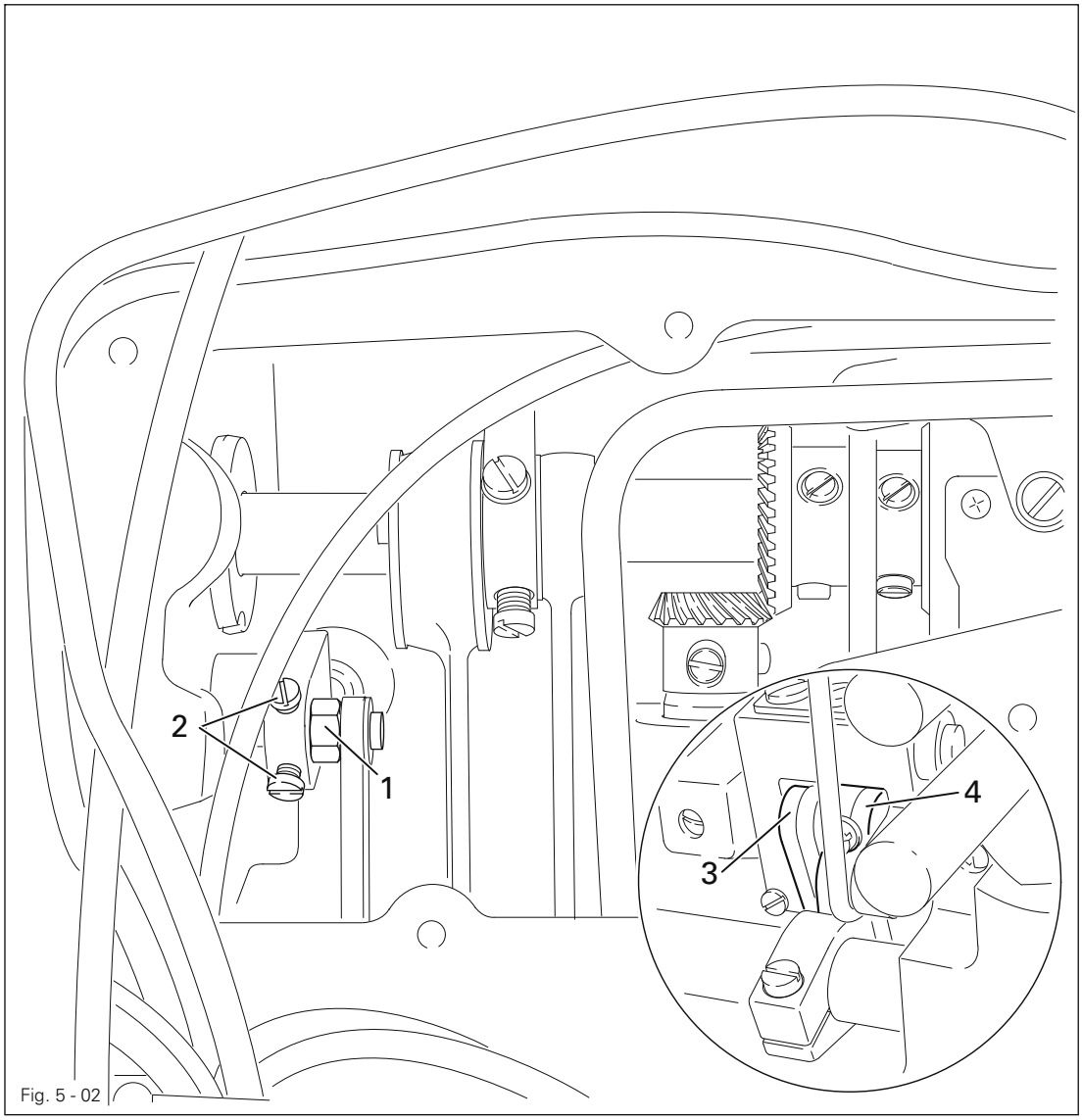

Fig. 5 - 02

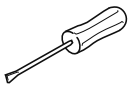

- Raise the presser foot and set the stitch length at "**0**".
- Adjust eccentric **1** (screw **2**) in accordance with the **requirement**.

1.05.03 Bottom feed dog motion

Requirement

1. When the needle bar is at its t.d.c., the bottom feed dog should be in its top point of reversal when the stitch length is set at "0".
2. When the needle bar is positioned 0.6 after t.d.c. and the largest stitch length is set, the bottom feed dog should not move when the reverse feed switch 3 is operated.

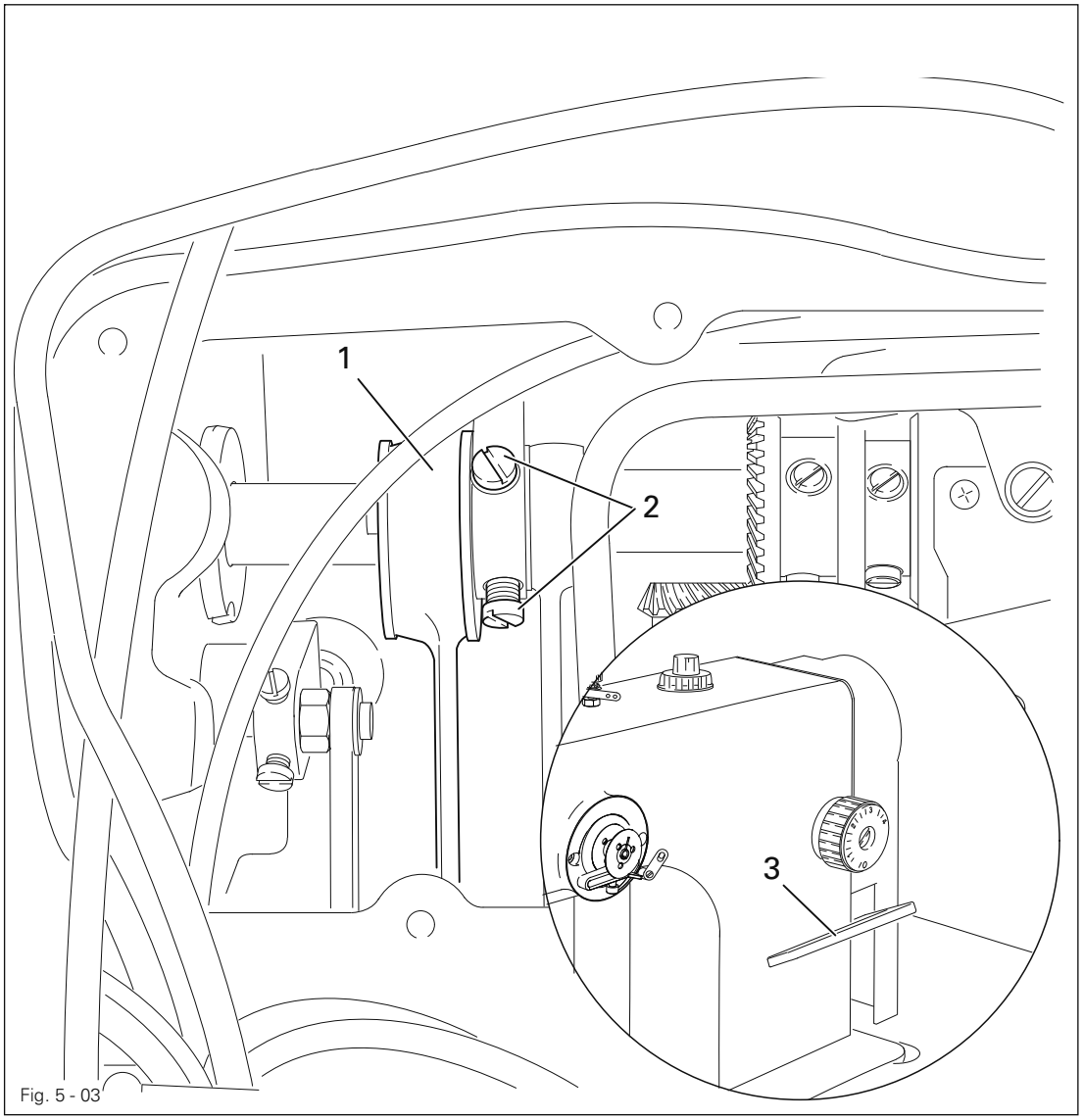

Fig. 5 - 03

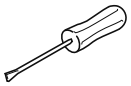

- Without moving it sideways, adjust eccentric 1 (screws 2) in accordance with the requirements.

1.05.04 Bottom feed dog position

Requirement

When the stitch length is set at "**0**" and the bottom feed dog **5** is at t.d.c., it should

1. Be positioned in the centre of the needle plate cutout in the feeding direction.
2. Its teeth should be **0.75 – 0.85 mm** parallel over the needle plate.

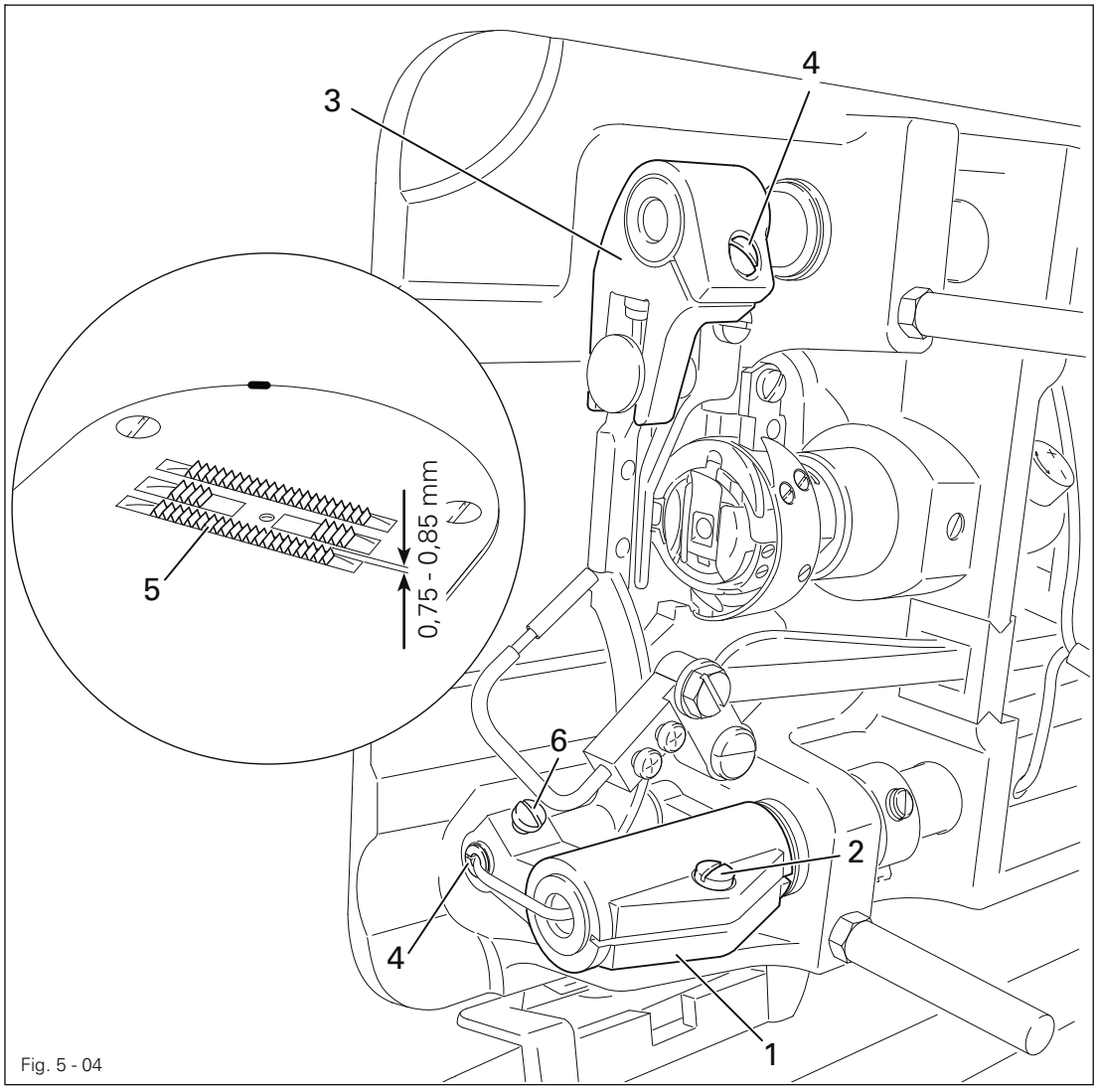

Fig. 5 - 04

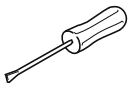

- Shift or turn crank **1** (screw **2**) in accordance with **requirement 1**.
- Turn crank **3** (screw **4**) and adjust eccentric **5** (screw **6** in accordance with **requirement 2**.

1.05.05 Needle rise, hook clearance, needle height and bobbin case position finger

Requirement

When the needle bar is positioned **1.8** mm above BDC,

1. the point of hook **1** should be centred to the needle and at a distance of **0.04 – 0.10 mm** from the groove of the needle, and
2. the top edge of the needle eye should be **0.8 mm** below the hook point.

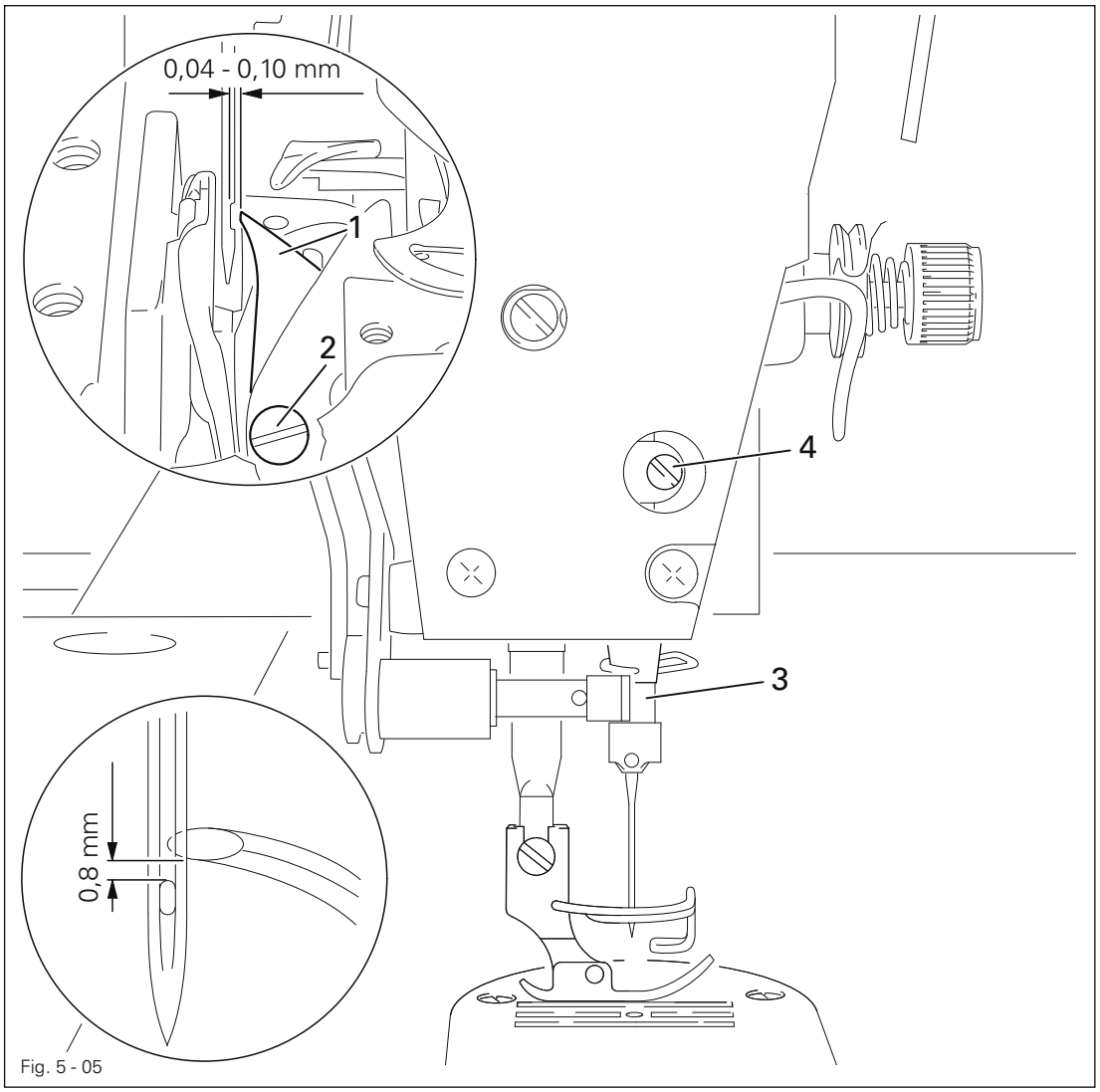

Fig. 5 - 05

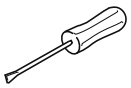

- Adjust the hook **1** (screws **2**) in accordance with **requirement 1**.
- Without twisting needle bar **3** (screw **4**), adjust it according to **requirement 2**.

1.05.06 Thread check spring and thread regulator

Requirement

1. 1. The movement of the thread check spring should be completed, when the needle point penetrates the material (spring stroke approx. 7 mm).
2. 2. When the thread is being looped round the hook and the loop is at its largest, the thread check spring should have moved approx. 1 mm.

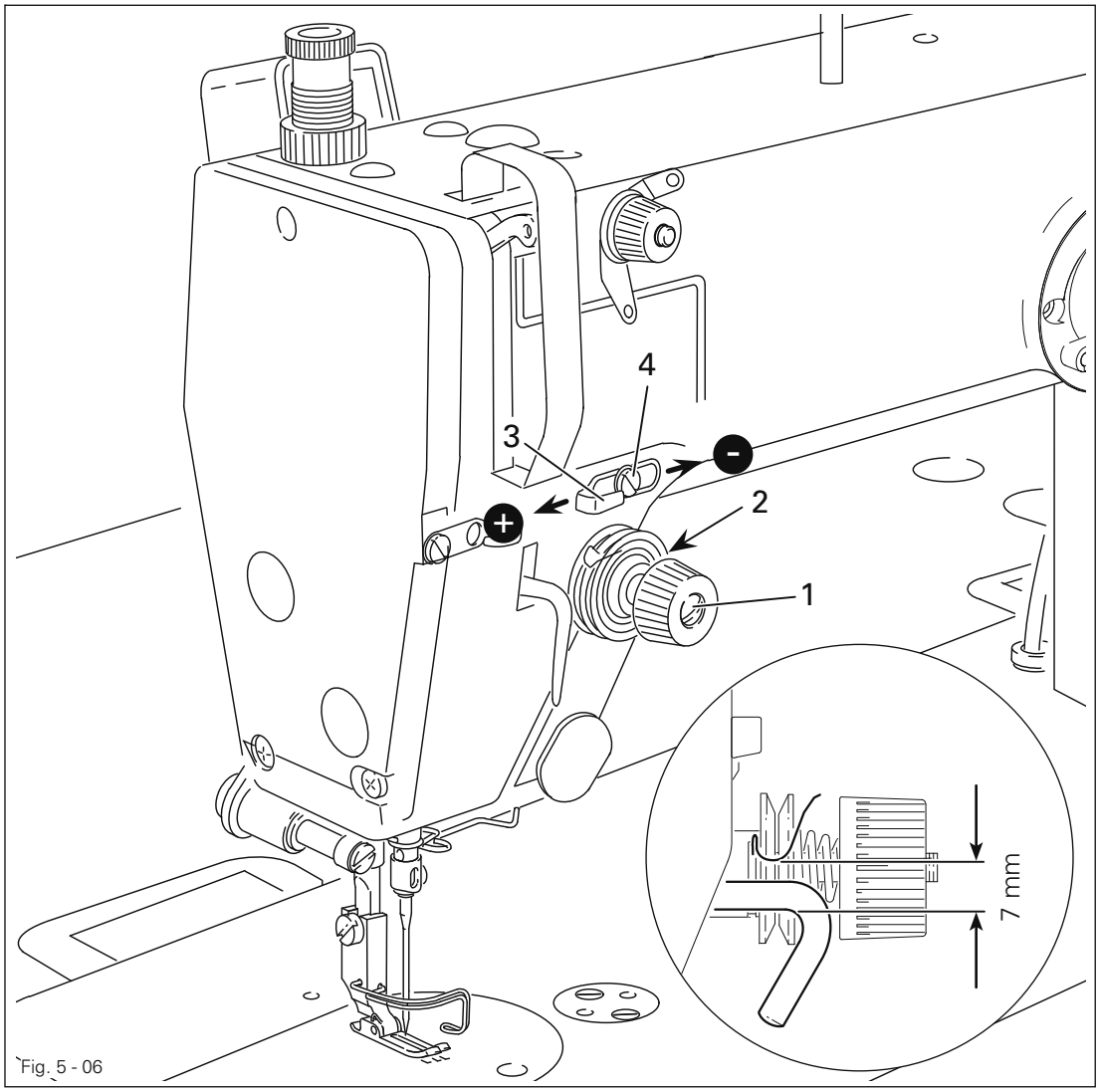

Fig. 5 - 06

- Adjust thread tension 1 (screw 2) in accordance with **requirement 1**.
- Adjust thread regulator 3 (screw 4) in accordance with **requirement 2**.

For technical reasons it may be necessary to alter the specified spring stroke:Turn thread regulator 1 (screw 2) towards "+" (= more thread) or towards "-" (= less thread).

1.05.07 Knee lever stop

Requirement
When knee lever **3** has been moved as far as possible, the presser foot should rise approx. **9 mm** above the needle plate.

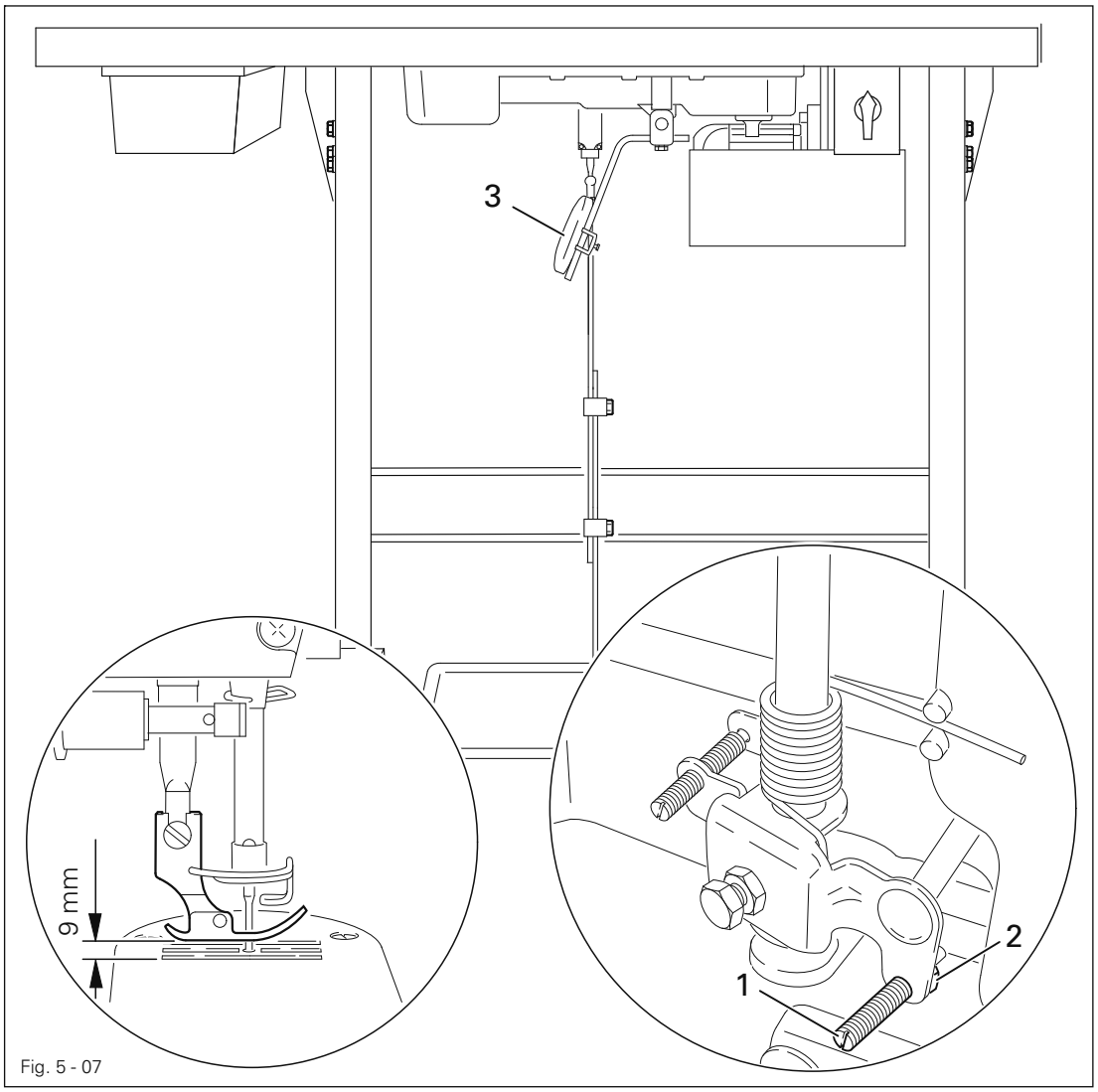

Fig. 5 - 07

- Adjust screw **1** (nut **2**) in accordance with the **requirement**.

1.05.08 Presser foot pressure

Requirement
The material should be fed without difficulty at all times and there should be no sign of pressure marks on the material.

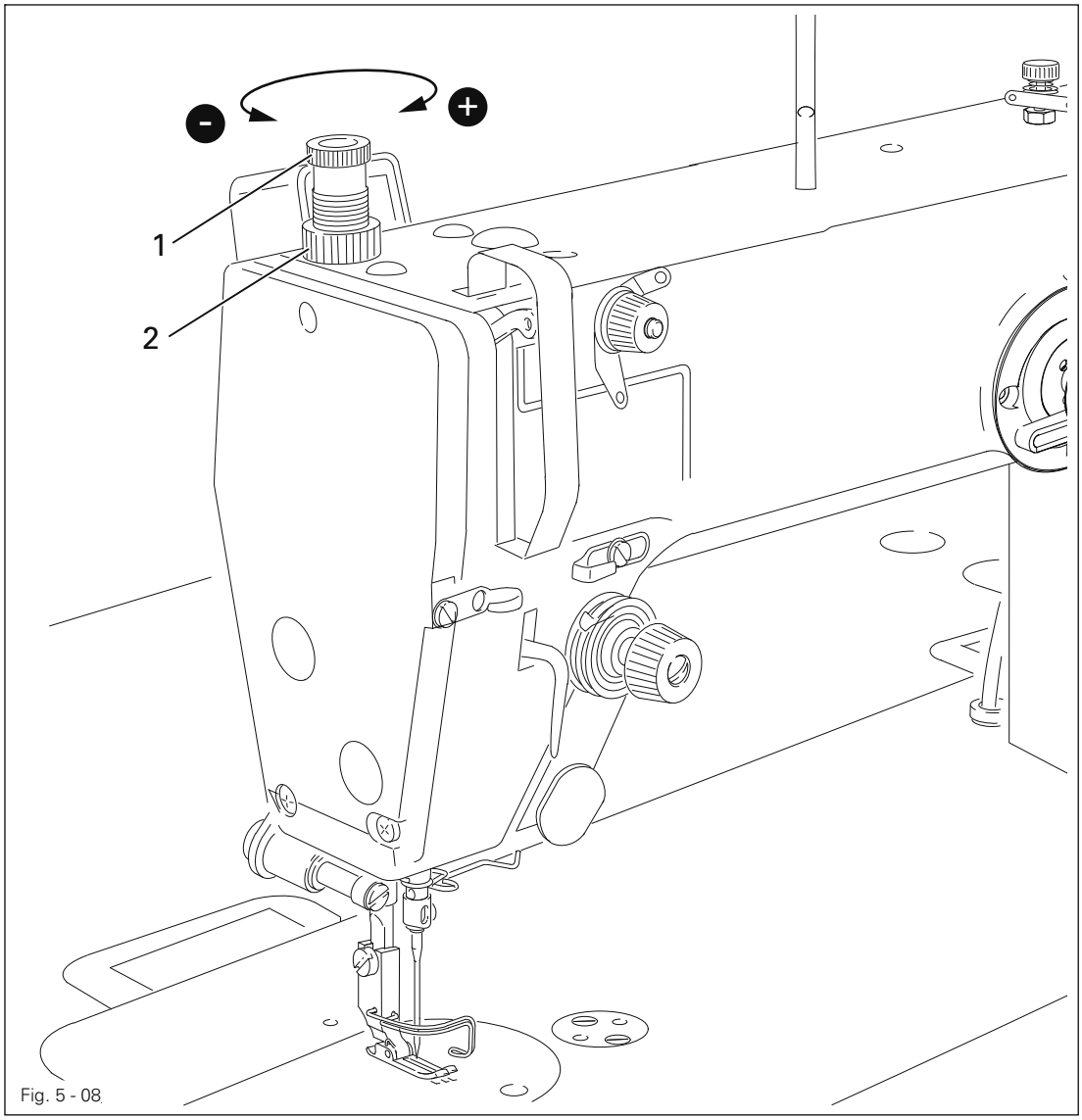

Fig. 5 - 08

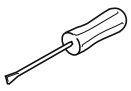

- Adjust milled screw **1** (milled nut **2**) in accordance with the **requirement**.

1.06 Adjusting the thread trimmer -900/93

1.06.01 Adjusting the synchronizer

Requirement

1. When the machine has stopped it should be positioned in b.d.c. needle bar.
2. After thread trimming the machine should be positioned in t.d.c. take-up lever.

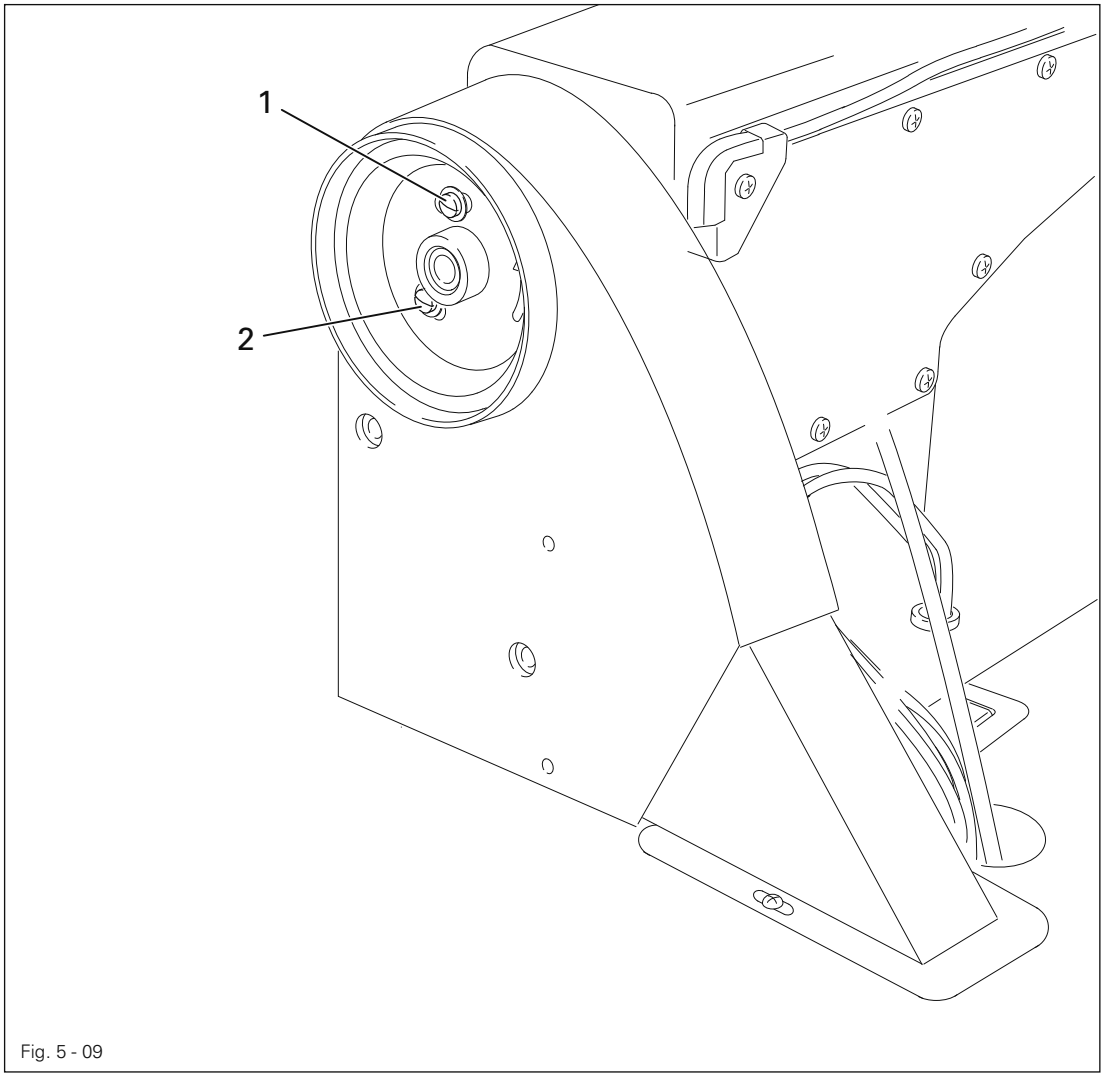

Fig. 5 - 09

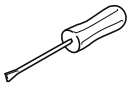

- Slightly loosen screw **1** and adjust it in accordance with **requirement 1**.
- Slightly loosen screw **2** and adjust it in accordance with **requirement 2**.



Only loosen screws **1** and **2**, do not remove them completely!

1.06.02 Adjusting the control cam

Requirement
When the take-up lever is at its t.d.c., the cutting operation should have been concluded (roller lever is pushed out of the control cam).

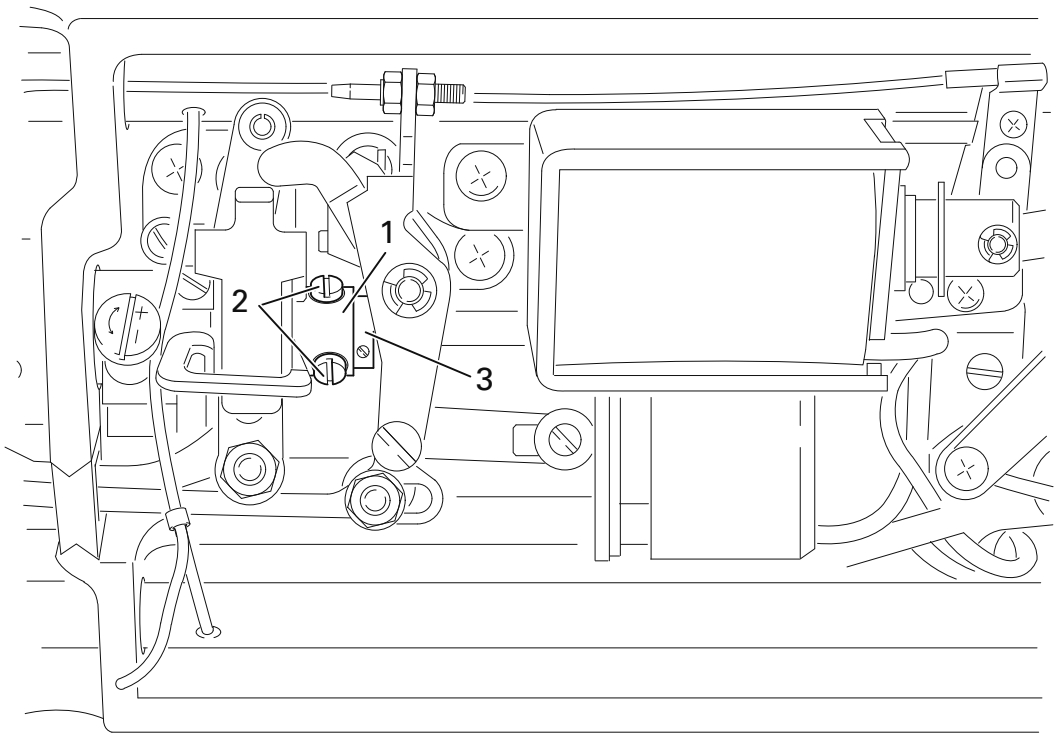

Fig. 5 - 10

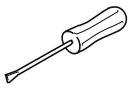

- Adjust control cam **1** (screws **2**) in accordance with the **requirement**.



Make sure that the control cam **1** is touching retaining collar **3**, when the screws **2** are tightened!

1.06.03 Position of the stationary knife

Requirement
The centre of the stationary knife **1** should be at needle hights and should have a distance of **3.5 mm** .

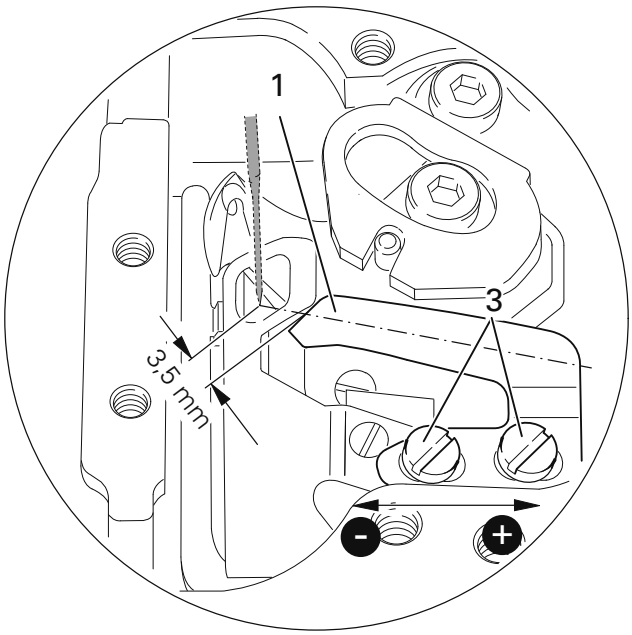

Fig. 5 - 11

- Adjust stationary knife **1** (screws **2**) in accordance with the **requirement**.

For technical reasons it may be necessary to alter the specified basic position: Move stationary knife **1** towards "**+**" (= more thread) or towards "**-**" (= less thread).

1.06.04 Needle thread tension release

Requirement
When magnets **3** are attracted, there should be a distance between the tension disks **4** of at least **0.5 mm**.

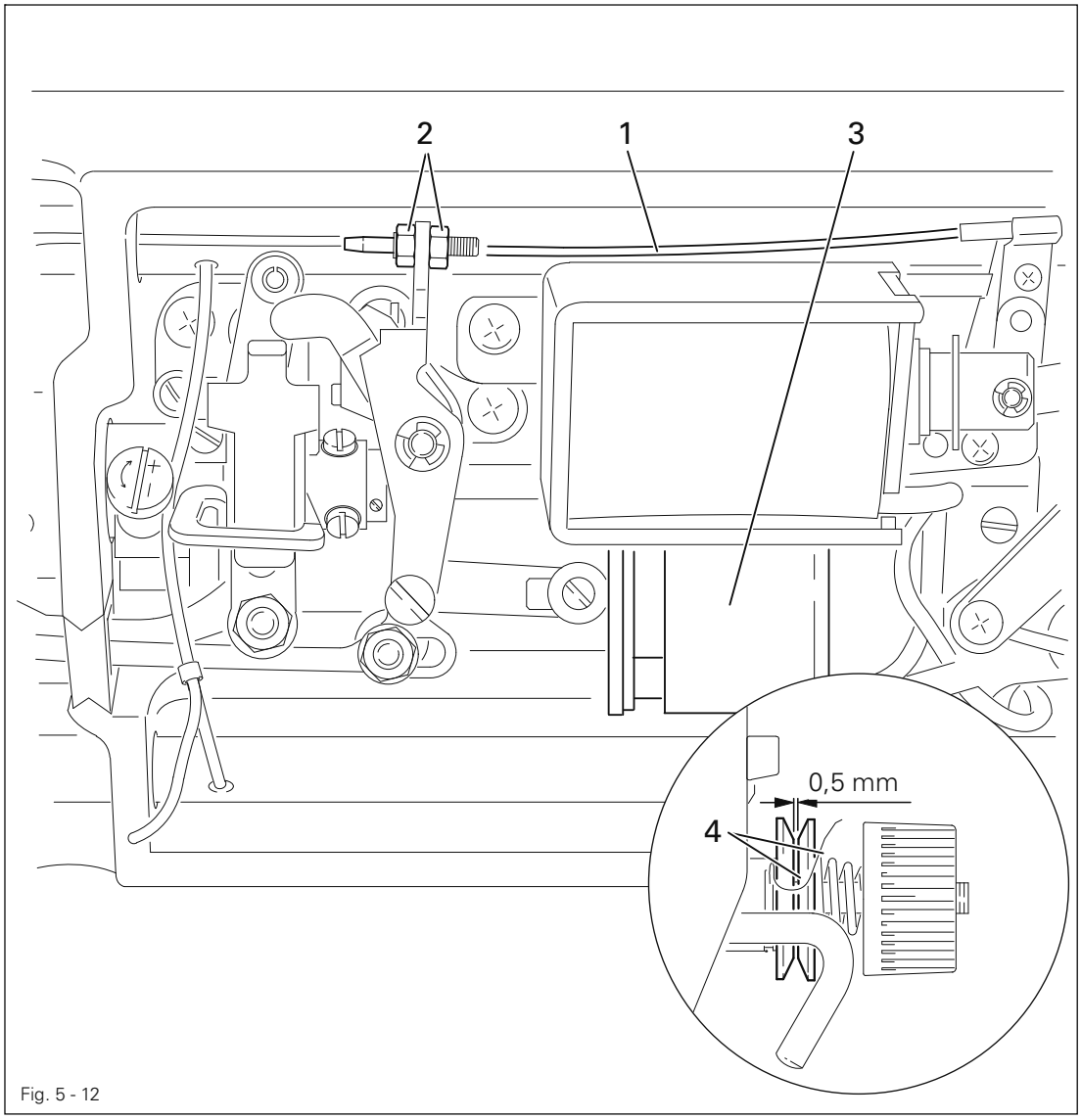

Fig. 5 - 12

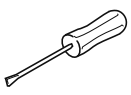

- Adjust tension cable **1** (nuts **2**) in accordance with the **requirement**.

1.07 Adjusting the thread wiper -909/93

Requirement

1. During its movement thread wiper **1** should not have any contact.
2. When the take-up lever is at its t.d.c., and the thread wiping device is switched on, the thread wiper **1** should pass behind the needle point with a clearance of approx. **1 mm** and under it with a clearance of approx. **2 mm**.

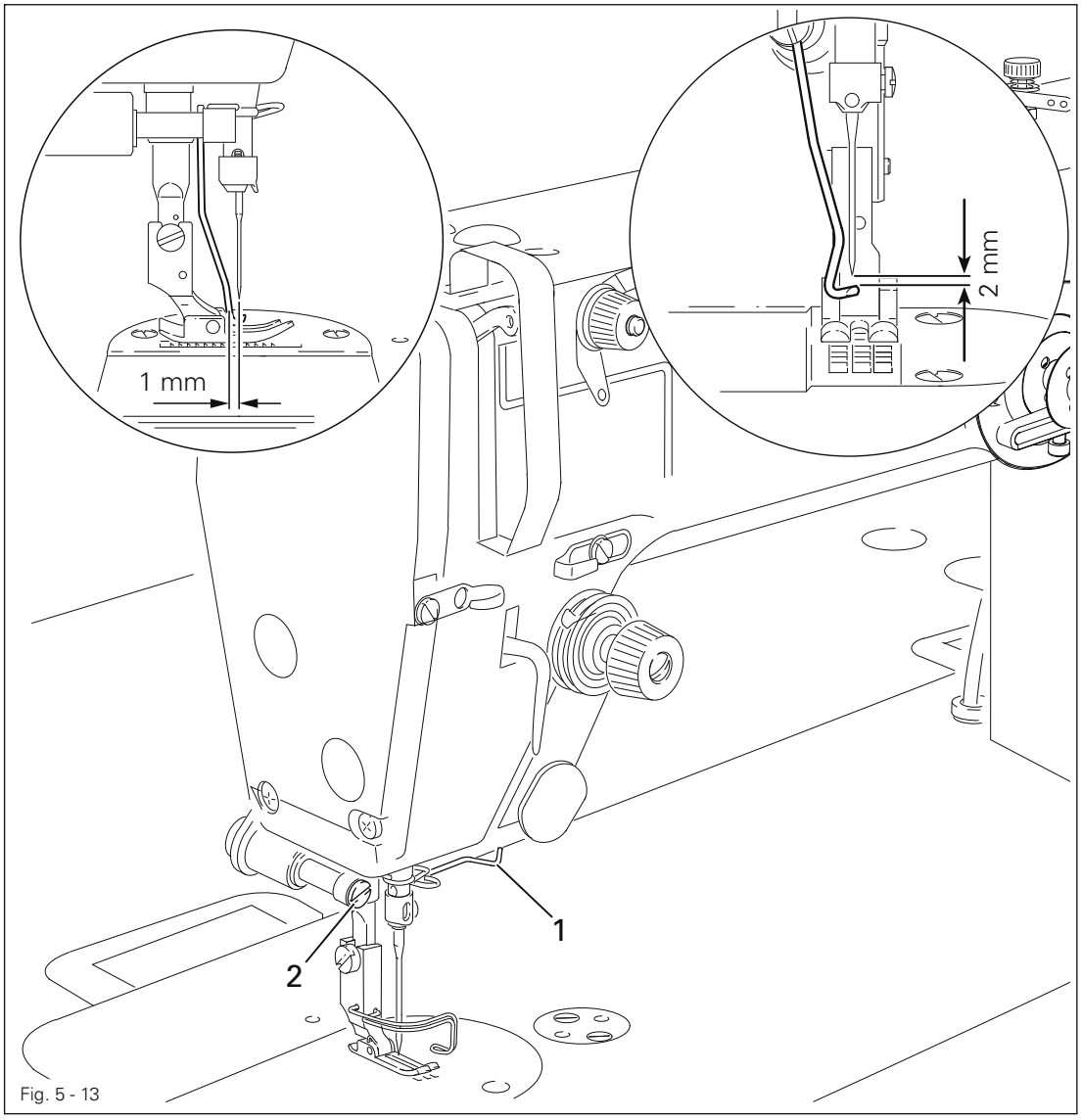

Fig. 5 - 13

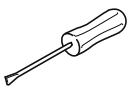

- Adjust the thread wiper **1** (screw **2**) in accordance with the **requirements**.

1.08 Adjusting the automatic presser foot lift -910/93

Requirement
When the automatic presser foot lift is operated, the presser foot should be **9 mm** above the needle plate.

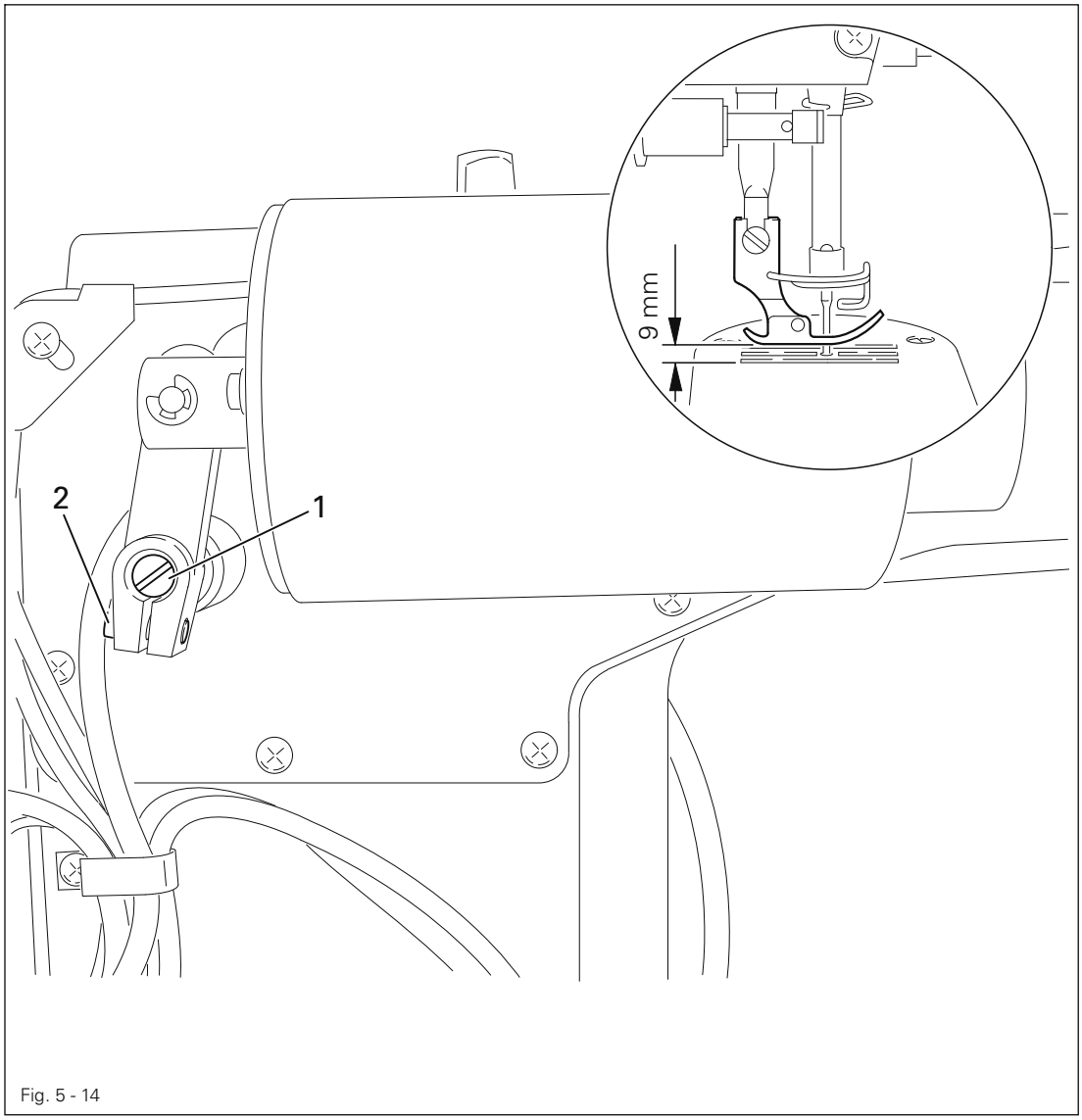

Fig. 5 - 14

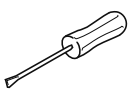

- Adjust shaft **1** (screw **2**) in accordance with the **requirement**.

1.09 Adjusting the backtacking mechanism -911/93

Requirement
When the reverse feed switch **3** (reverse sewing) is operated, the stitch length should be the same as during sewing.

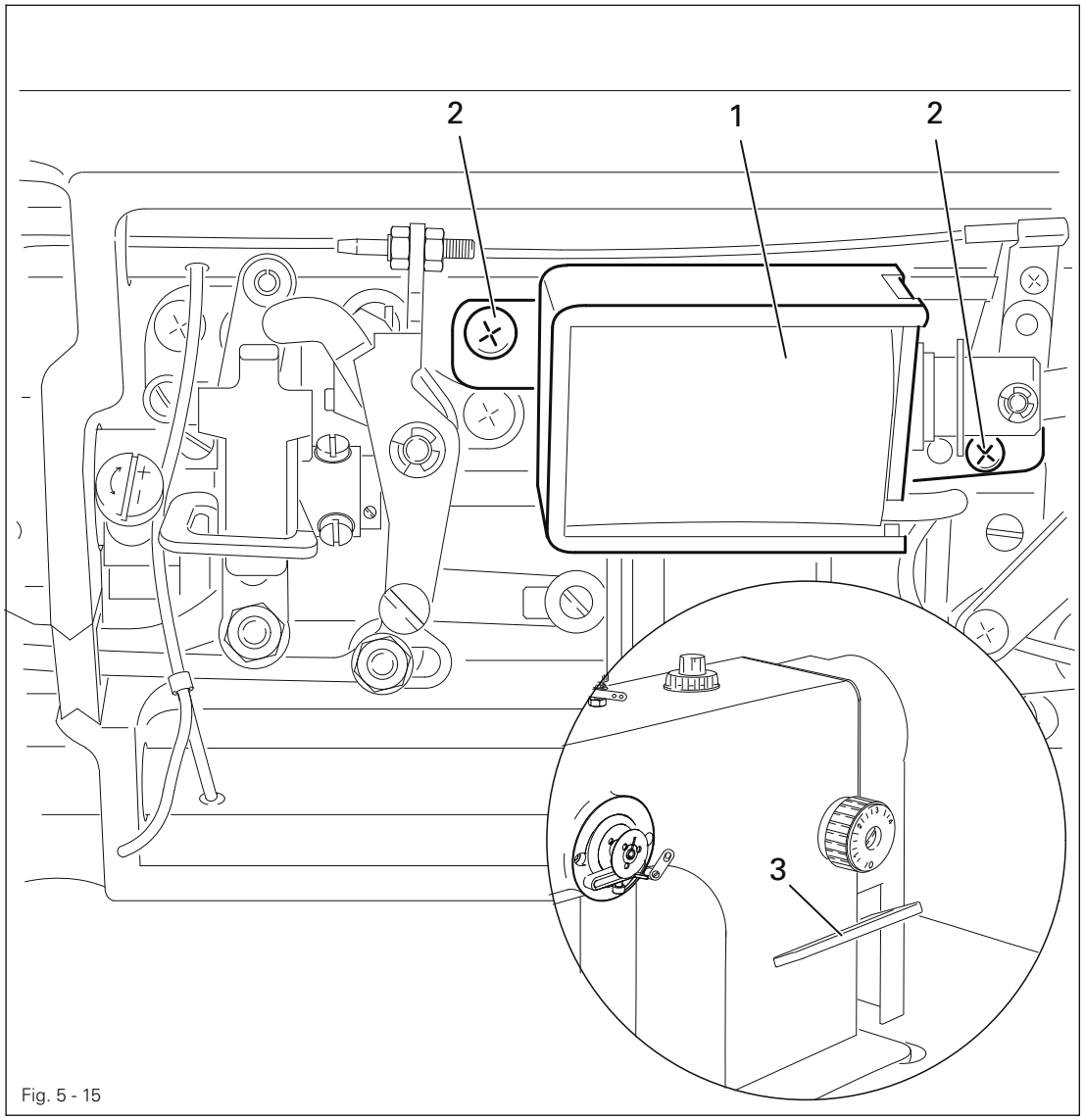

Fig. 5 - 15

- Adjust solenoid **1** (screws **2**) in accordance with the **requirement**.

1.10 Parameter settings (for MH-4-7W-215-CE)

- Parameter settings are described in the separate operations manual for the drive, and may only be changed by qualified technicians!

2 Block diagram PFAFF 1163 with MH-4-7W-215-CE

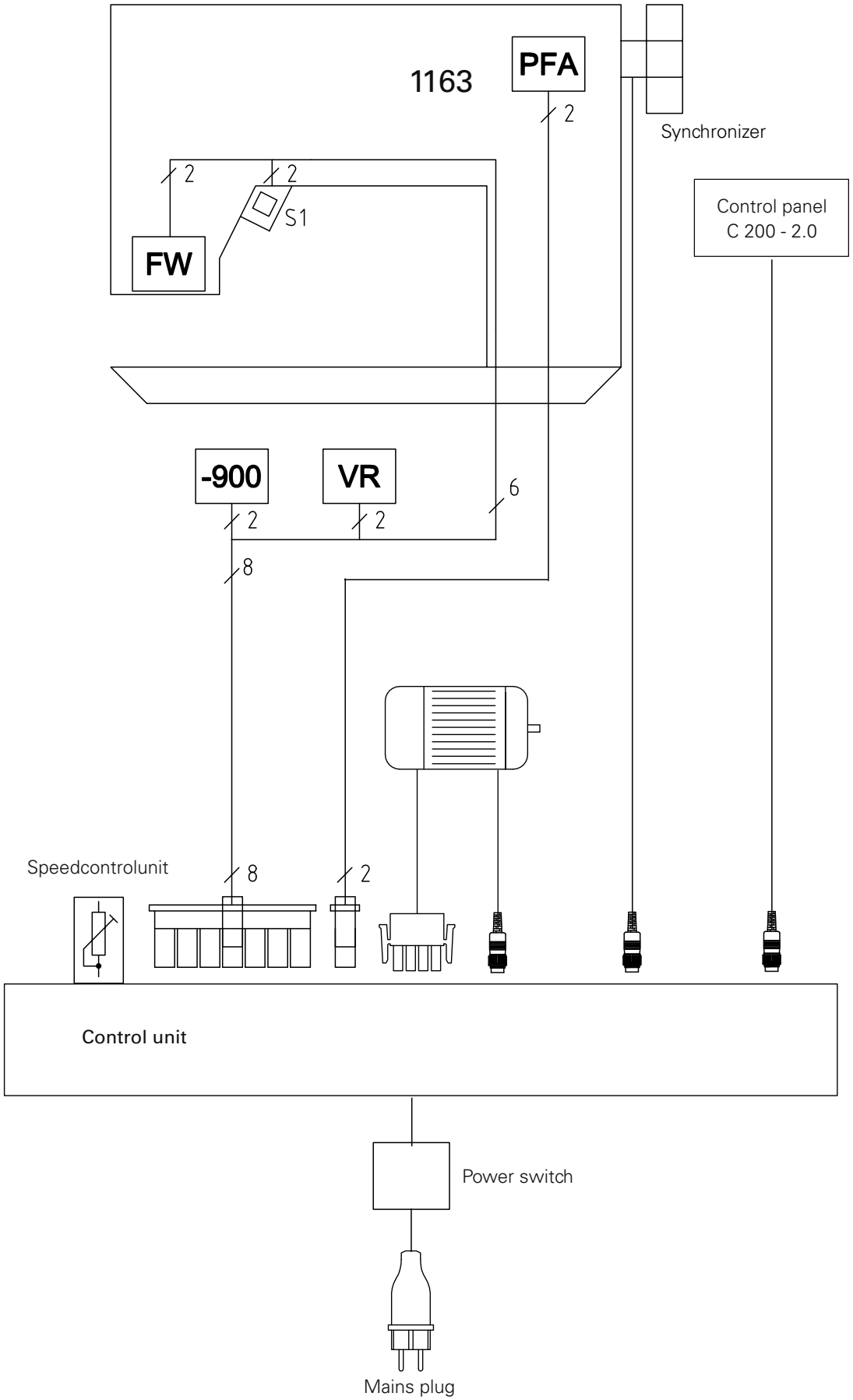

PFAFF® Industrial



Europäische Union
Wachstum durch Innovation – EFRE



PFAFF Industriesysteme
und Maschinen AG

Hans-Geiger-Str. 12 - IG Nord
D-67661 Kaiserslautern

Phone: +49-6301 3205 - 0
Fax: +49-6301 3205 1386
E-mail: info@pfaff-industrial.com

Hotlines:
Technical service: +49-175/2243-101
Application consultance: +49-175/2243-102
Spare-parts hotline: +49-175/2243-103

Printed in Germany

© PFAFF Industriesysteme und Maschinen AG 2009, PFAFF is the exclusive trademark of VSM Group AB.PFAFF Industriesysteme und Maschinen AG is an authorized licensee of the PFAFF trademark.