PFAFF® Industrial

1525
1525-S

ADJUSTMENT MANUAL

1525-G
1526

This Adjustment Manual is valid for machines from the following serial numbers onwards:
2 722 168 →

296-12-18 597/002
Justieranleitung engl. 09.11

The reprinting, copying or translation of PFAFF Adjustment Manuals, whether in whole or in part, is only permitted with our previous authorization and with written reference to the source.

PFAFF Industriesysteme
und Maschinen AG

Hans-Geiger-Str. 12 - IG Nord
D-67661 Kaiserslautern

Contents ..... Chapter - Page

13	**Adjustment**	**13 - 1**
13.01	Notes on adjustment	13 - 1
13.02	Tools, gauges and other equipment	13 - 1
13.03	Abbreviations	13 - 1
13.04	Explanation of the symbols	13 - 1
13.05	Adjusting the basic machine	13 - 2
13.05.01	Balance weight	13 - 2
13.05.02	Neutral position of unison feed	13 - 3
13.05.03	Feeding motion of the unison feed	13 - 4
13.05.04	Lifting motion of the bottom feed dog	13 - 5
13.05.05	Bottom feed-dog height	13 - 7
13.05.06	Needle in needle-hole centre	13 - 8
13.05.07	Feeding-stroke difference	13 - 9
13.05.08	Needle height (preliminary adjustment)	13 - 10
13.05.09	Needle rise, hook clearance, needle height (final adjustm.) and needle guard	13 - 11
13.05.10	Bobbin-case opener stroke	13 - 13
13.05.11	Top feed stroke	13 - 14
13.05.12	Top-feed lifting motion	13 - 15
13.05.13	Clearance between lifting presser and needle plate	13 - 16
13.05.14	Bobbin winder	13 - 17
13.05.15	Thread check spring and regulator on the PFAFF 1525	13 - 18
13.05.16	Thread check springs and regulators on the PFAFF 1526	13 - 19
13.05.17	Speed reduction when the stroke is increased	13 - 20
13.05.18	Needle-thread tension release	13 - 21
13.05.19	Presser foot pressure	13 - 22
13.05.20	Lubrication	13 - 23
13.05.21	Re-engaging the slip-clutch	13 - 24
13.06	**Adjusting the edge trimmer -731/02**	**13 - 25**
13.06.01	Neutral position of knife	13 - 25
13.06.02	Knife stroke	13 - 26
13.06.03	Cutting stroke	13 - 27
13.06.04	Actuating lever	13 - 28
13.06.05	Knife height	13 - 29
13.06.06	Knife position in sewing direction	13 - 30
13.06.07	Knife position crosswise to sewing direction	13 - 31
13.07	**Adjusting the thread trimmer 900/81 and -900/86**	**13 - 32**
13.07.01	Resting position of roller lever/radial position of control cam	13 - 32
13.07.02	Thread-catcher height	13 - 33
13.07.03	Thread catcher position	13 - 34
13.07.04	Knife height	13 - 35

Contents ..... Chapter - Page

13.07.05 Knife pressure ..... 13 - 36
13.07.06 Bobbin-thread retaining spring ..... 13 - 37
13.07.07 Thread catcher transmission crank (only on the PFAFF 1526) ..... 13 - 38
13.07.08 Tansmission linkage (only on the PFAFF 1526) ..... 13 - 39
13.07.09 Manual cutting test ..... 13 - 40

13.08 Adjusting the thread trimmer -900/82 ..... 13 - 41
13.08.01 Resting position of the roller lever/
Preliminary adjustment of the radial position of the control cam ..... 13 - 41
13.08.02 Thread catcher and knife height ..... 13 - 42
13.08.03 Knife mounting support ..... 13 - 43
13.08.04 Knife cutting position ..... 13 - 44
13.08.05 Thread catcher position ..... 13 - 45
13.08.06 Readjustment of the control cam ..... 13 - 46
13.08.07 Knife pressure ..... 13 - 47
13.08.08 Bobbin-thread retaining spring ..... 13 - 48
13.08.09 Manual cutting test ..... 13 - 49

13.09 Adjusting the bobbin-thread supply monitor -926/06 ..... 13 - 50

13.10 Parameter settings ..... 13 - 51
13.10.01 Parameter list ..... 13 - 51

14 Circuit diagrams ..... 14 - 1
14.01 Circuit diagrams (with Quick-EcoDrive and control unit P 70 EDx) ..... 14 - 1
14.02 Block diagram PFAFF 1525 S with control unit P41 PD-L ..... 14 - 7
14.03 Circuit diagrams (with Quick-PiccoDrive and control unit P41 PD-L) ..... 14 - 3

13 Adjustment



Please observe all notes from **Chapter 1 Safety** of the instruction manual! In particular care must be taken to see that all protective devices are refitted properly after adjustment, see **Chapter 1.06 Danger warnings** of the instruction manual!



Unless stated otherwise, during all adjustment work the machine must be disconnected from the electric and pneumatic power supply!
Danger of injury if the machine is started accidentally!



The illustrations in this chapter show the single-needle machine, **PFAFF 1525**. For the two-needle machine, **PFAFF 1526,** various adjustments have to be made twice, i.e. on the left- and right-hand sewing hooks. This is pointed out in the chapters concerned, and some of the illustrations have to be regarded in reverse.

13.01 Notes on adjustment

All following adjustments are based on a fully assembled machine and may only be carried out by expert staff trained for this purpose.
Machine covers, which have to be removed and replaced to carry out checks and adjustments, are not mentioned in the text.
The order of the following chapters corresponds to the most logical work sequence for machines which have to be completely adjusted. If only specific individual work steps are carried out, both the preceding and following chapters must be observed.
Screws, nuts indicated in brackets ( ) are fastenings for machine parts, which must be loosened before adjustment and tightened again afterwards.

13.02 Tools, gauges and other equipment

- Set of screwdrivers with 2 to 10 mm blade widths
- Set of open-ended spanners/wrenches, 7 to 14 mm across flats
- Set of allen keys from 2 to 6 mm
- Needle rise gauge (Part No. 61-111 600-01)
- Screw clamp (Part No. 61-111 600-35/001)
- 7.0 mm gauge for presser-foot height (part No. 61-111 633-61)
- 5.0 mm gauge for top feed stroke (part No. 61-111 633-60)
- Metal rule (part No. 08-880 218-00)

13.03 Abbreviations

t.d.c. = top dead centre
b.d.c. = bottom dead centre

13.04 Explanation of the symbols

In this adjustment manual, symbols emphasize operations to be carried out or important information. The symbols used have the following meaning:



Note, information

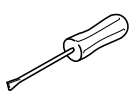

Service, repair, adjustment, maintenance
(work to be carried out by qualified staff only)

13.05 Adjusting the basic machine

13.05.01 Balance weight

Requirement
At needle bar t.d.c. the eccentric lobe of balance weight **1** must face downwards.

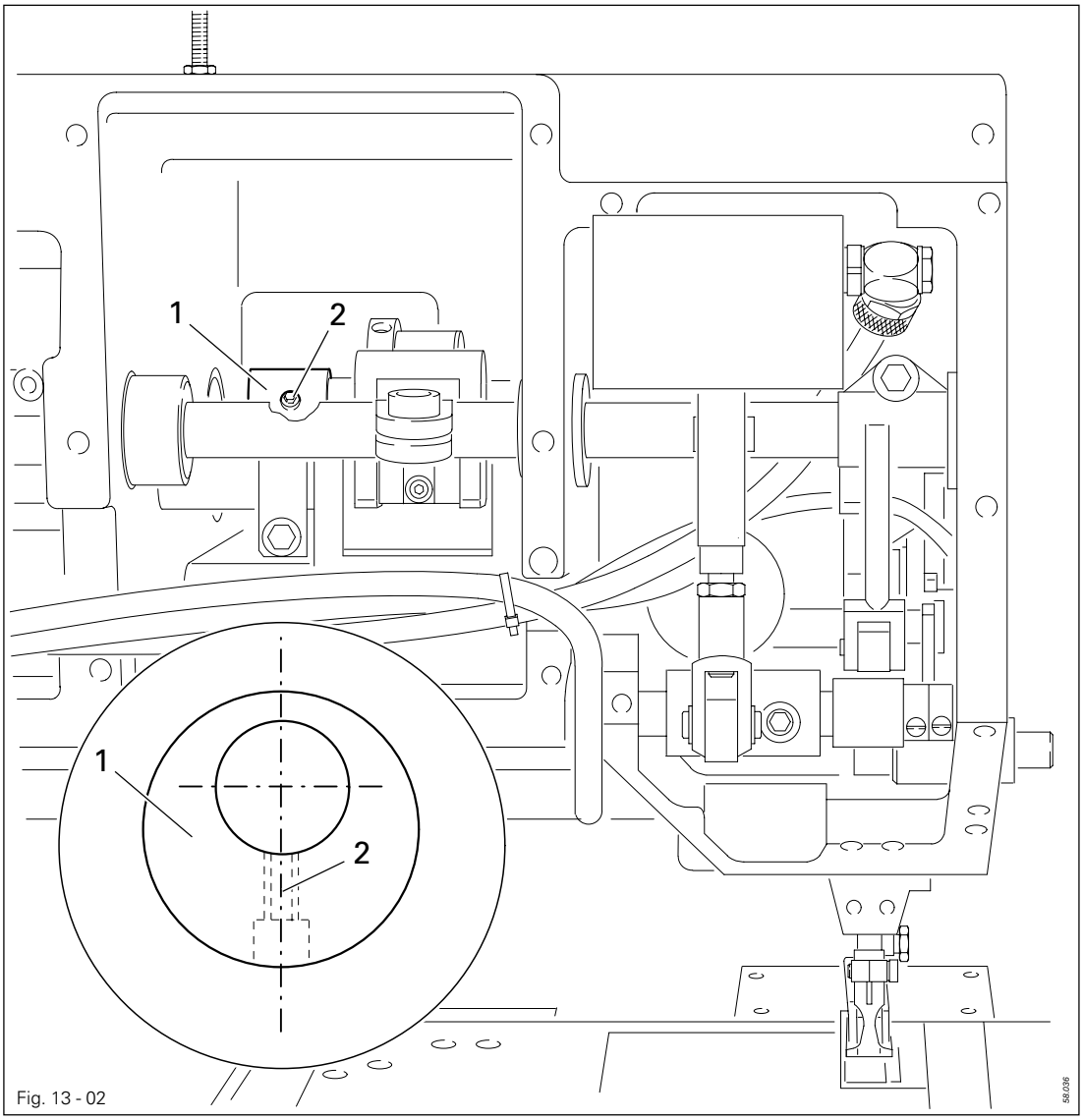

Fig. 13 - 02

- Adjust balance weight **1** (screw **2**) according to **Requirement**.

13.05.02 Neutral position of unison feed

Requirement
At stitch length setting " 0 " neither the top- and bottom feed dogs nor the needle bar must make any feeding movement.

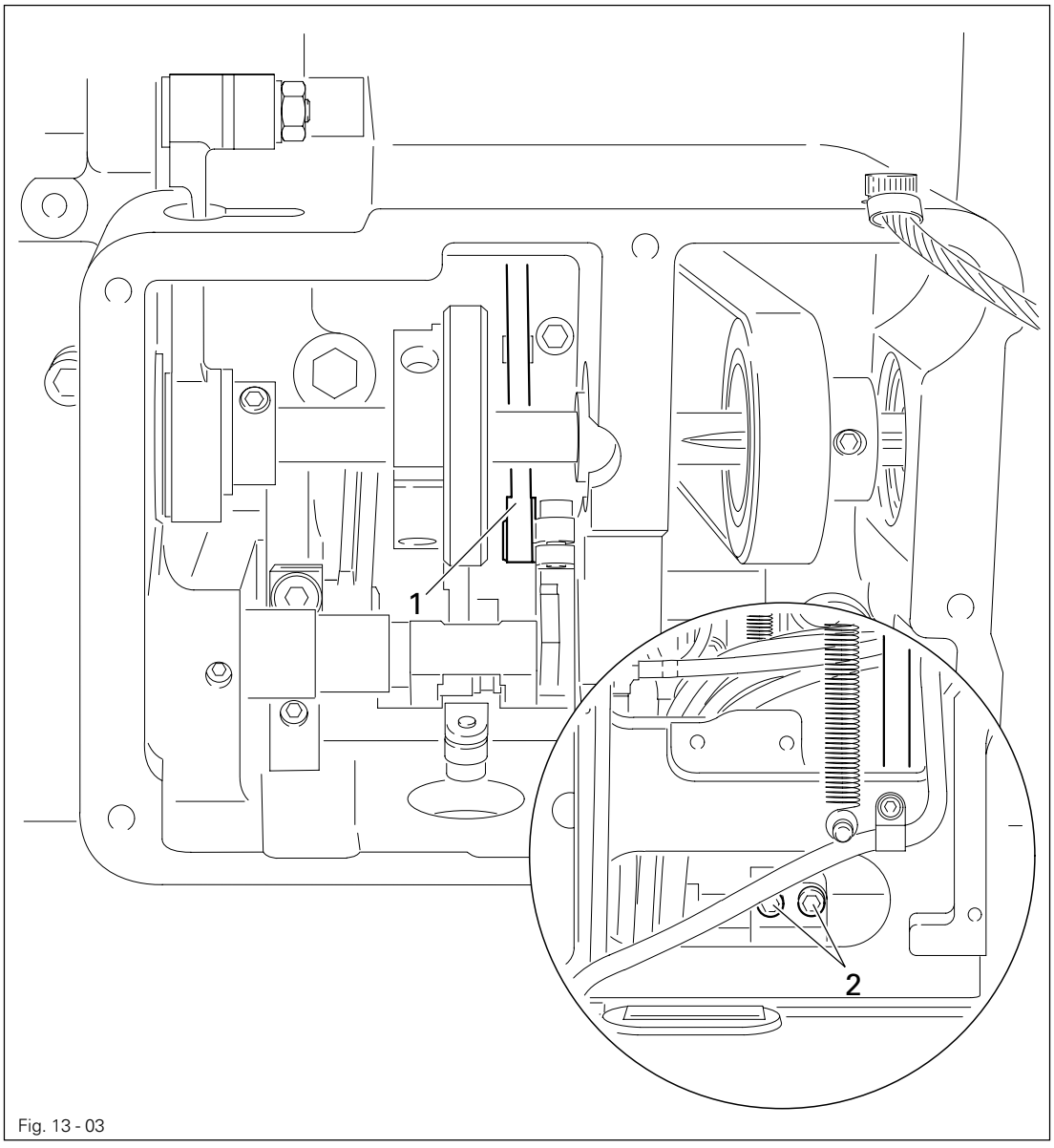

Fig. 13 - 03

- Re-position connecting rod **1** (screws **2**) according to **Requirement**.

13.05.03 Feeding motion of the unison feed

Requirement
At the longest stitch-length setting and at needle bar b.d.c. neither the top- and bottom feed dogs nor the needle bar must make any feeding motion when the reverse-feed lever is pressed.

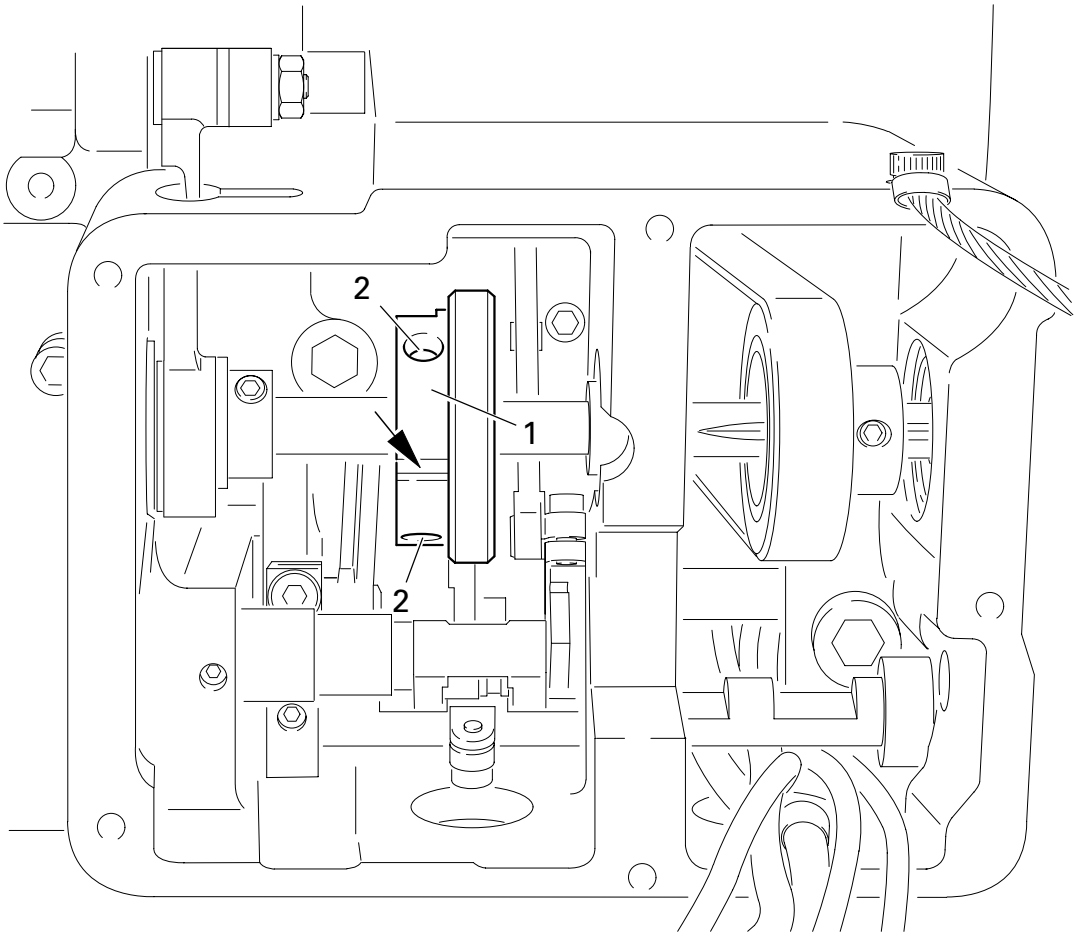

Fig. 13 - 04

- Adjust eccentric 1 (screws 2) according to **Requirement**. Make sure that cut-out (see arrow) is visible.

13.05.04 Lifting motion of the bottom feed dog

Requirement
With the needle bar at b.d.c. the feed dog must be at t.d.c.

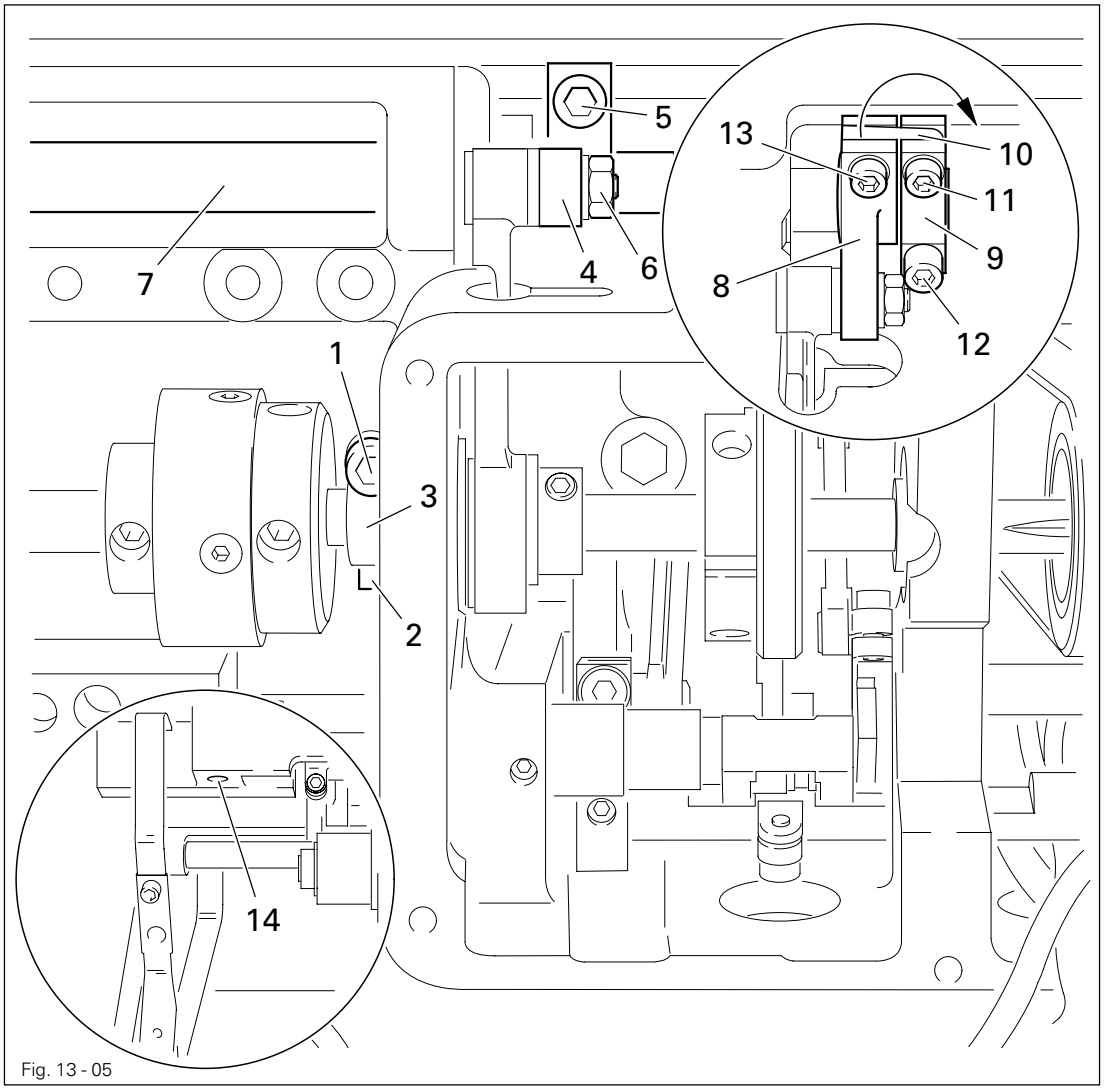

Fig. 13 - 05

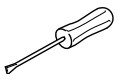

- Loosen screw **1** and undo screw **2** a half turn.
- Turn clamp collar **3** according to **Requirement** and first tighten screw **2,** then tighten screw **1**.



With kit No. 91-266 375-90 it is possible to disengage the lifting motion of the feed dog.

Fitting and adjusting the parts of the kit

- Remove link **4** (screw **5**, nut **6**).
- Loosen the parts secured to shaft **7** and push shaft **7** to the left a little.
- Place the pre-assembled parts **8** and **9** onto shaft **7**.

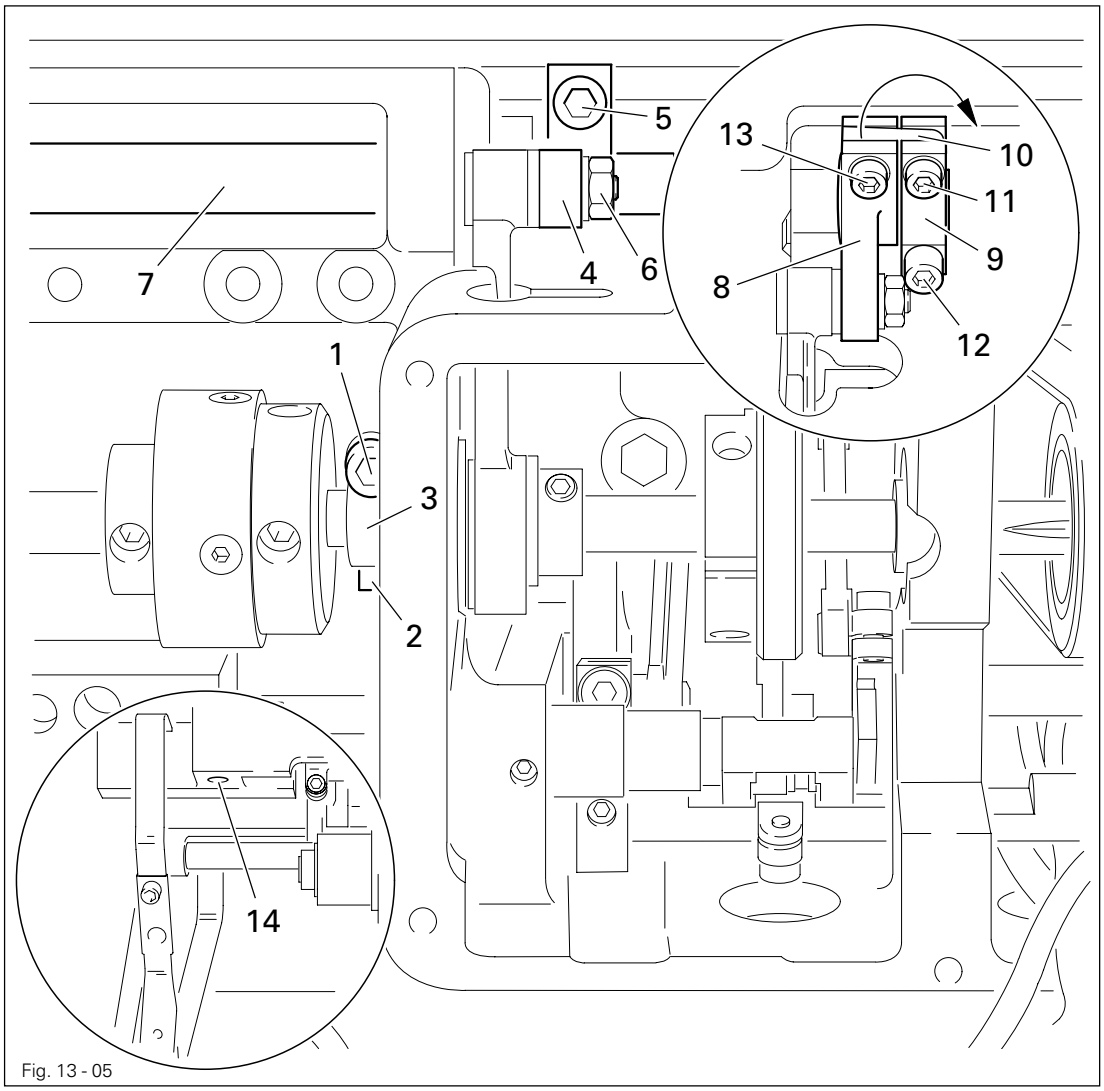

Fig. 13 - 05

Engaging the lifting motion

- The lifting motion is engaged when parts 8 to 13 are fitted as shown in the upper magnified view.

Disengaging the lifting motion

- Take out screw 13 and swing part 10 to the right (screw 11).
- Set the feed-dog teeth flush with the upper surface of the needle plate and fix shaft 7 in this position by inserting screw 13 into hole 14.
- When the lifting motion is engaged again, there is no need to adjust the bottom feed dog height.

13.05.05 Bottom feed-dog height

Requirement

1. When the needle bar is at b.d.c., the stitch length is set at "0" and crank **5** is at the bottom of the slotted lever (see arrow), the bottom feed dog must protrude from the top surface of the needle plate by **0.5 mm**.
2. The bottom feed dog must be centred in the needle-plate slot.

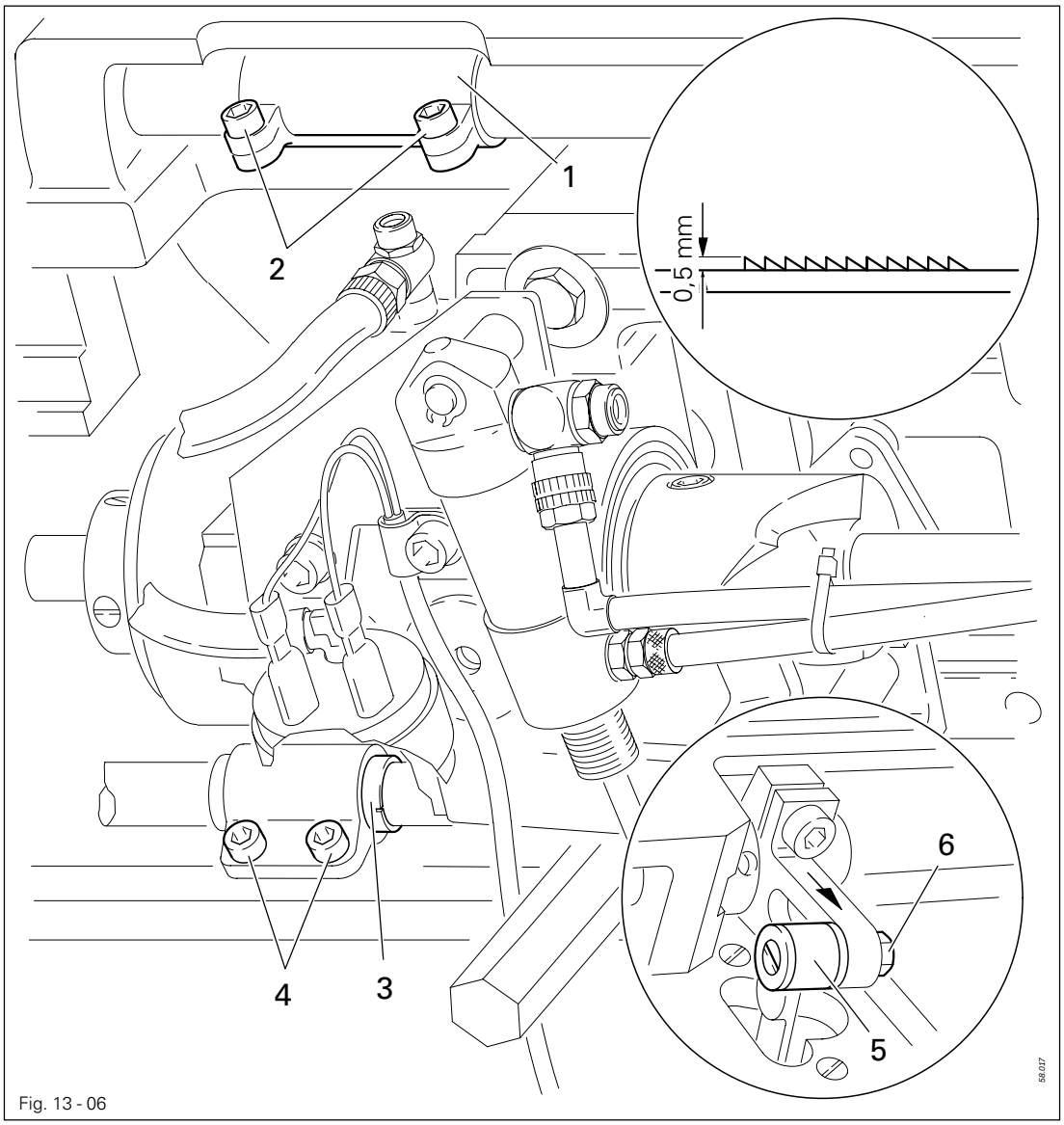

Fig. 13 - 06

- Turn lifting crank **1** (screws **2**) and eccentric sleeve **3** (screws **4**) according to **Requirement 1**, and set feed dog in centre of needle-plate slot as shown in **Requirement 2**.

The feed-dog height can also be increased by shifting crank **5** (nut **6**) upwards as required.

13.05.06 Needle in needle-hole centre

Requirement
At stitch length "0" the needle must enter exactly in the centre of the needle hole.

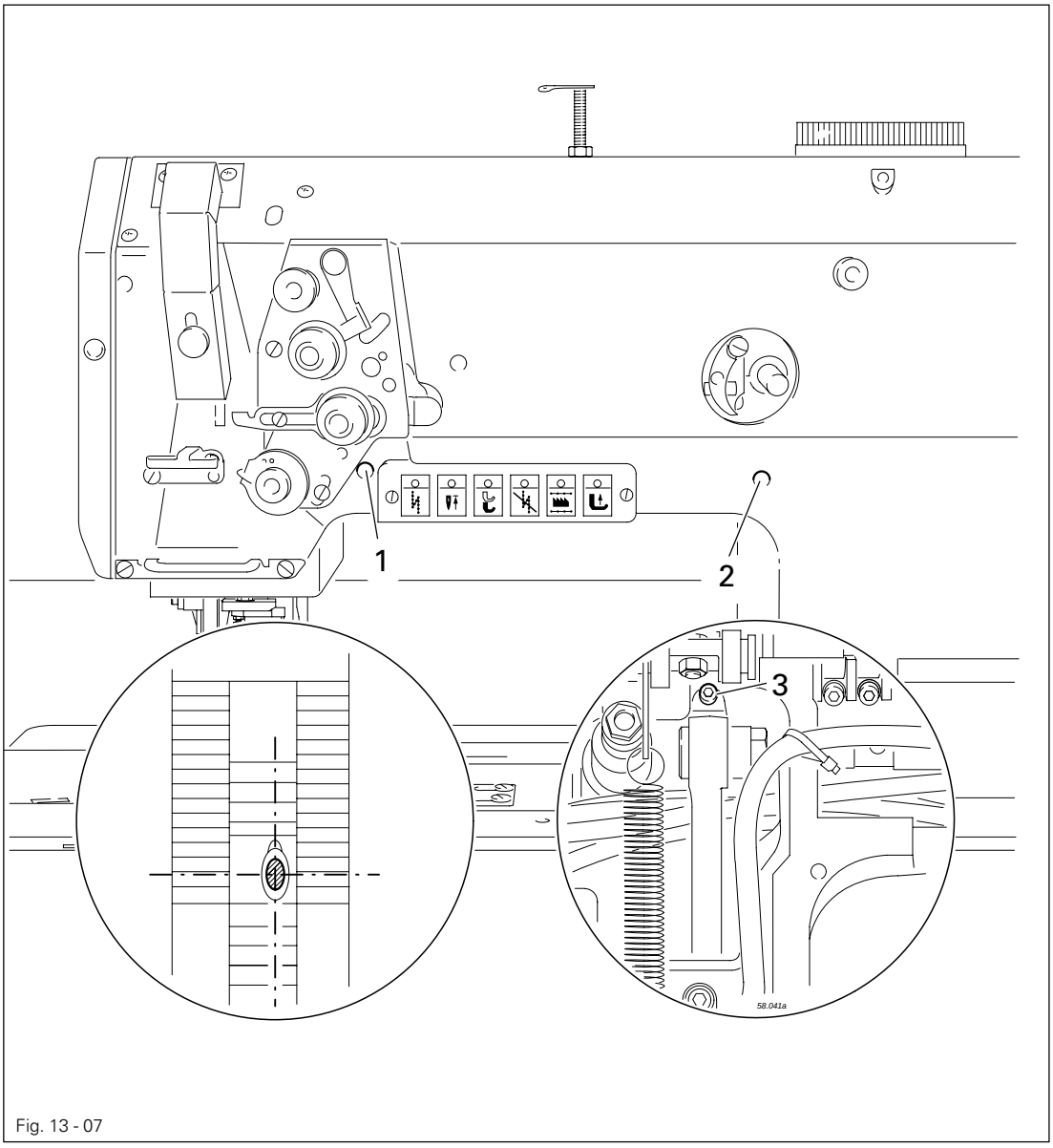

Fig. 13 - 07

- Position the needle-bar frame (screws **1**, **2** and **3**) according to **Requirement**.

13.05.07 Feeding-stroke difference

Requirement
At the longest stitch-length setting and when the balance wheel is turned, the feeding strokes of the needle bar and the bottom feed dog must be the same.

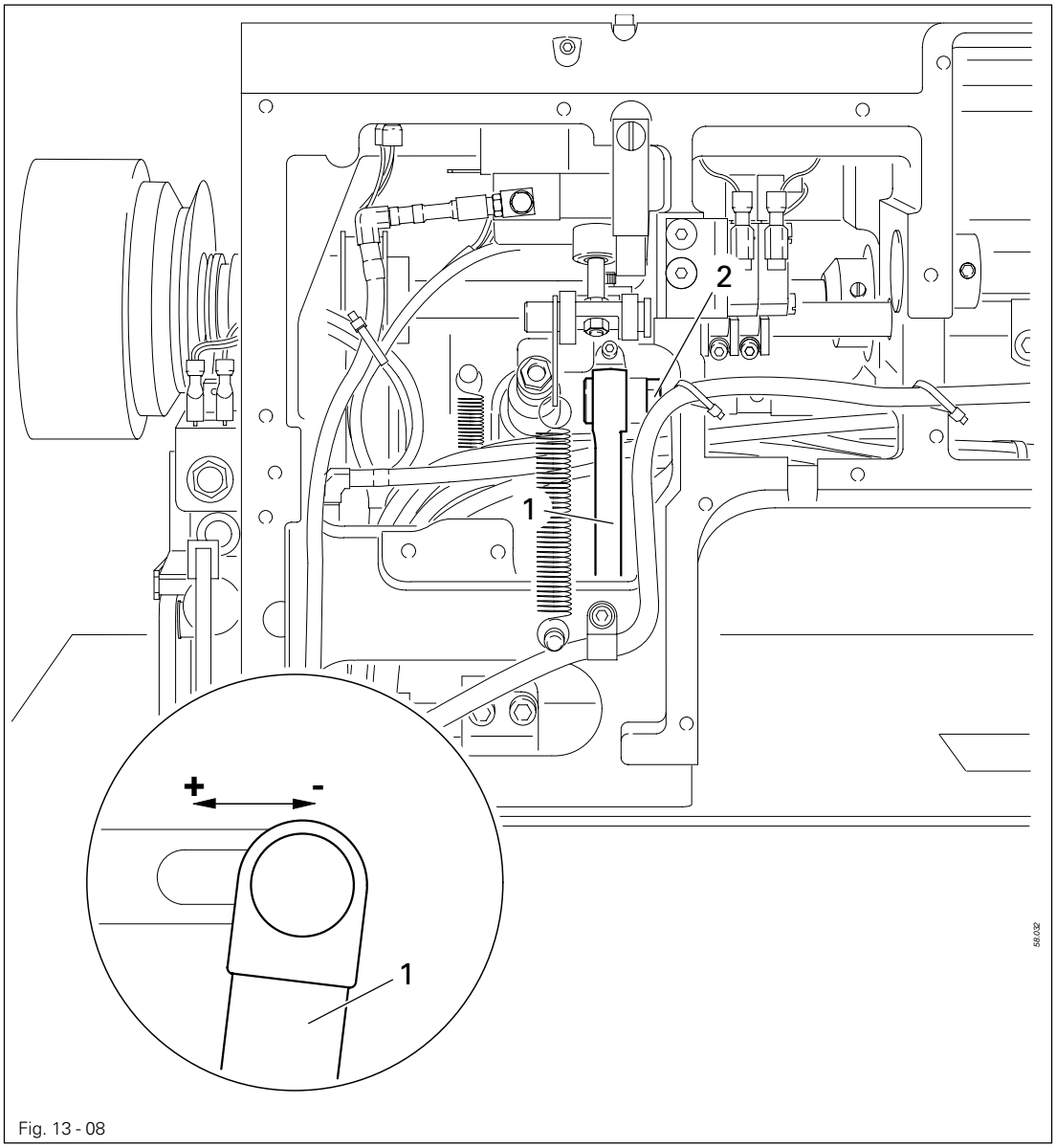

Fig. 13 - 08

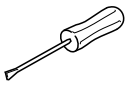

- Reposition connecting rod **1** (nut **2**) according to **Requirement**.
  Connecting rod to " + " = longer needle feeding stroke.
  to " – " = shorter needle feeding stroke.

13.05.08 Needle height (preliminary adjustment)

Requirement
At needle-bar t.d.c. the clearance between needle point and needle plate must be approx. **19 mm**.

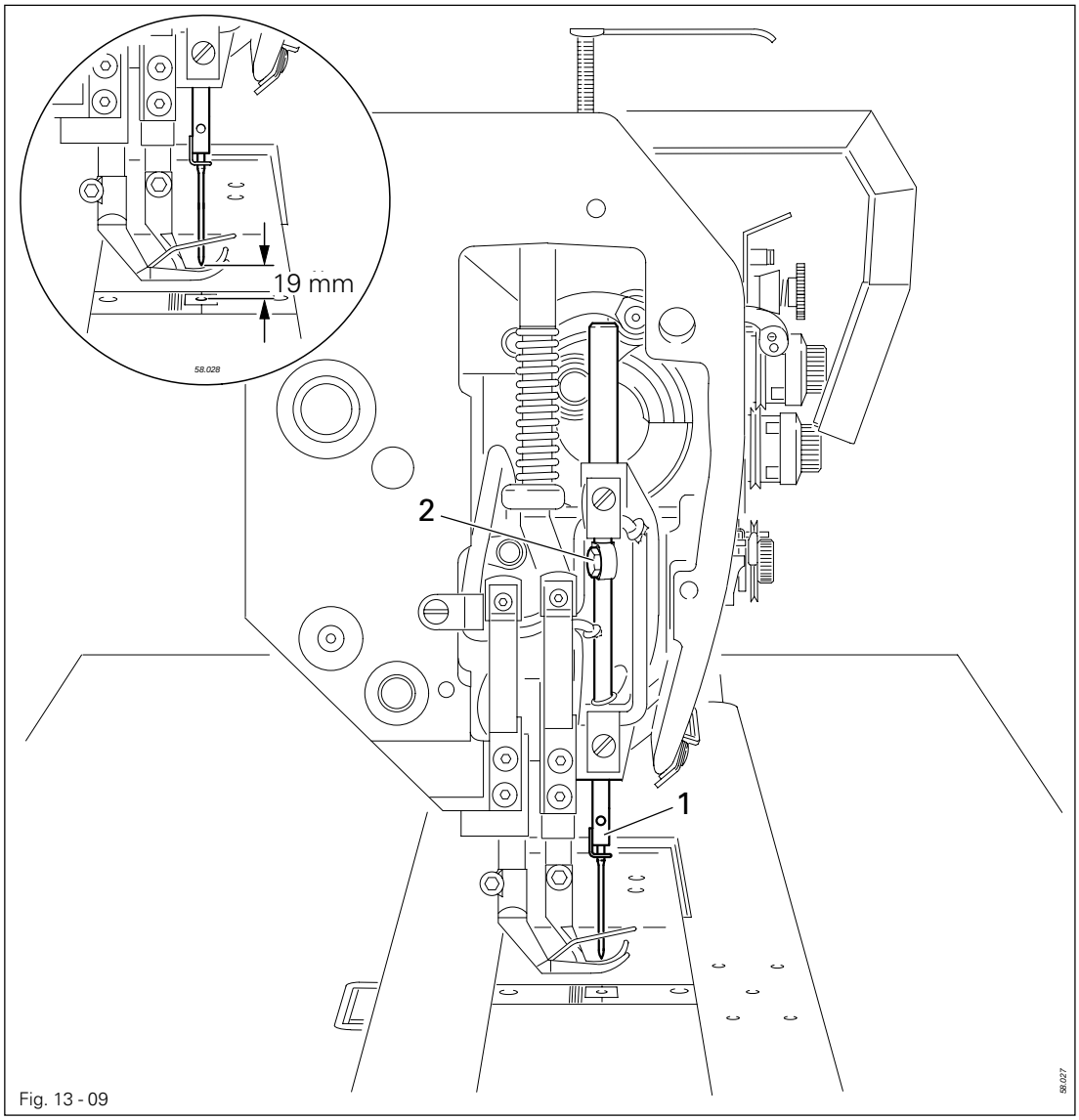

Fig. 13 - 09

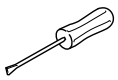

- Re-position needle bar **1** (screw **2**), without turning it, according to **Requirement**.

13.05.09 Needle rise, hook clearance, needle height (final adjustm.) and needle guard
(On the **PFAFF 1526** carry out this adjustment on both hooks)

Requirement
When the stitch length is set at "4" and with the needle rise position set (see table):
1. the hook point must be at "needle centre" with a hook-to-needle clearance of **0.05 to 0.1 mm**;
2. the top of the needle eye must be **0.8 mm** below the hook point;
3. and needle guard **9** must touch the needle just lightly.

Needle rise position:
Model B + C = 2.0 mm
Model C/D + D = 2.4 mm

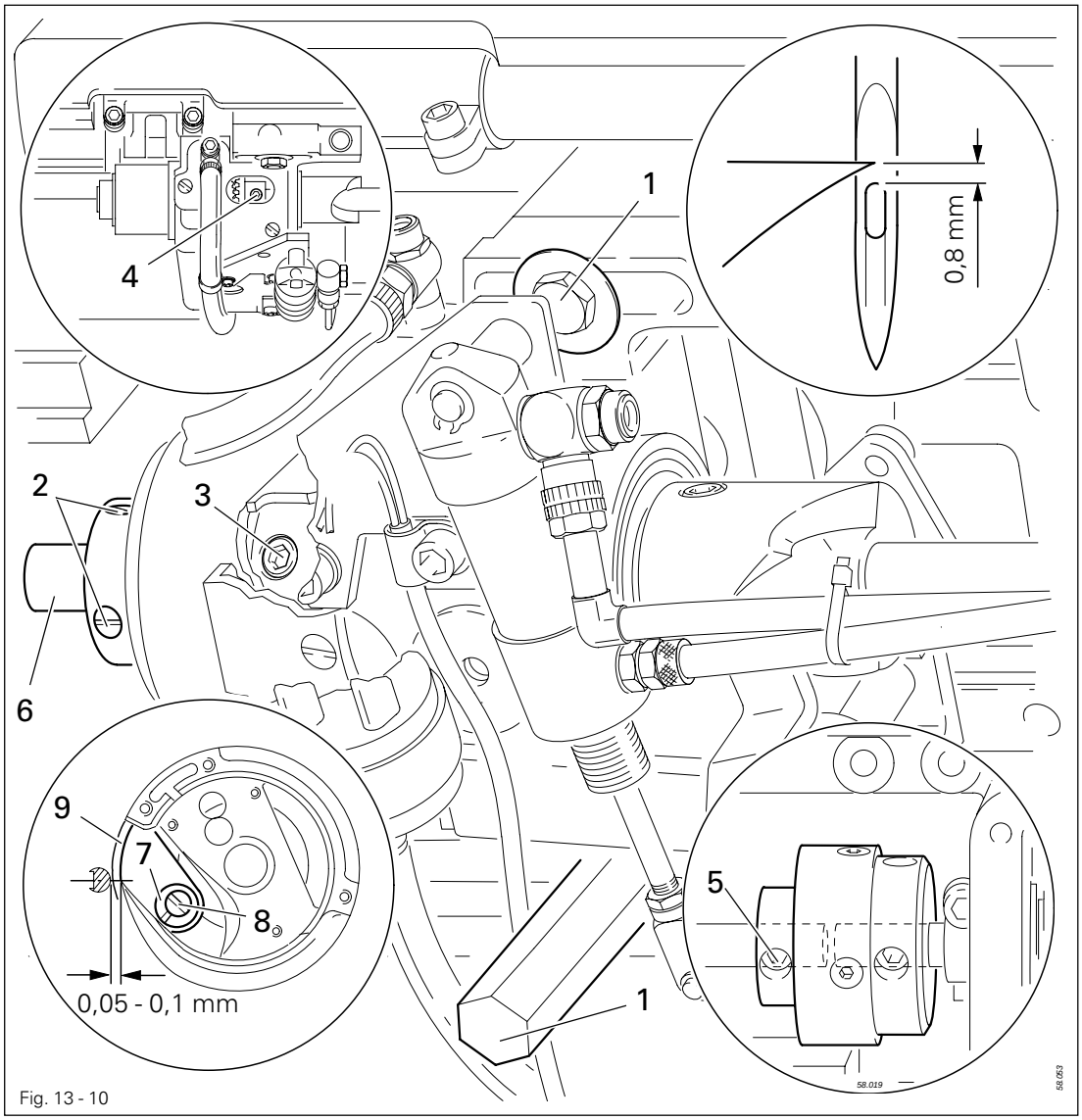

Fig. 13 - 10

- Set stitch length "4" and loosen screws **1**, **2**, **3** and **4**.
- Set needle bar at 2 mm past b.d.c. and set hook point at "needle centre."
- Set hook clearance according to **Requirement 1** and tighten screws **1**.
- Loosen screws **5** and turn shaft **6** so that the shafts in the coupling do not touch each other.

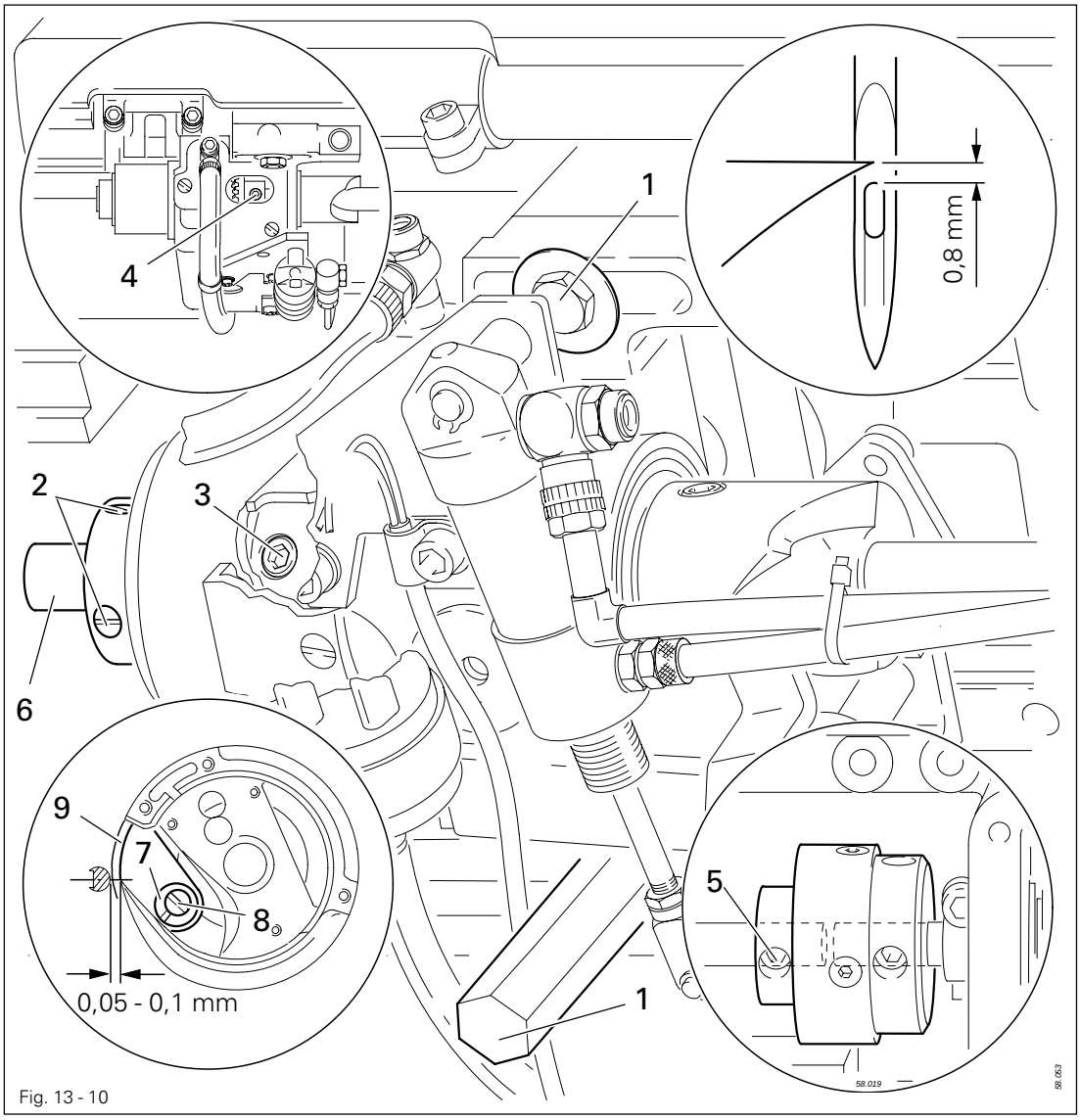

Fig. 13 - 10

- Tighten screws **2** and **5**.
- Making sure there is a slight play in the gear, move the collar up and tighten screws **3**.
- Set needle bar at 2 mm past b.d.c. (use screw clamp and needle-rise gauge).
- Set hook point at "needle centre" and tighten screws **4**.
- If necessary, readjust needle bar according to **Requirement 2.**
- Remove hook base and turn eccentric **7** (screw **8**) according to **Requirement 3**.

On the PFAFF 1526, also loosen screws **1**, **2**, **3** and **4** on the second hook and carry out the adjustments as described.

13.05.10 Bobbin-case opener stroke

(On the **PFAFF 1526** carry out this adjustment on both hooks)

Requirement

1. The front edge of retaining spring **1** and stop **7** must must be flush.
2. In the rearmost position of the bobbin-case opener, hook base **6** and retaining spring **1** must stand apart by **thread thickness X**.

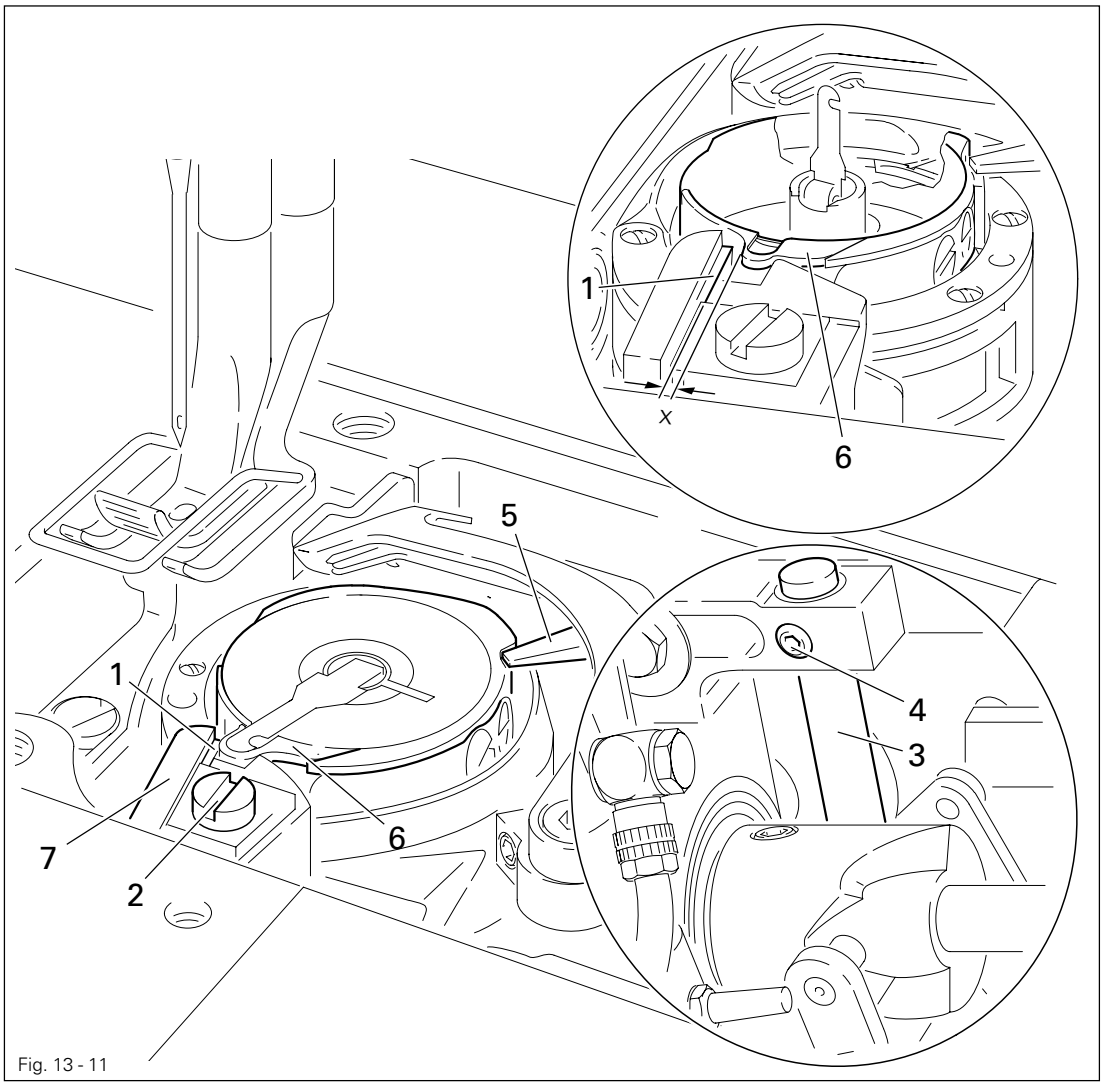

Fig. 13 - 11

- Position retaining spring **1** (screw **2**) according to **Requirement 1**.
- Re-position shaft **3** (screw **4**) according to **Requirement 2**.

13.05.11 Top feed stroke

Requirement

1. With knob **1** set at position "5", the top feed dog **10** and presser foot **11** should each rise by **5.0 mm.**
2. The standard stroke should be limited to **5 mm**.

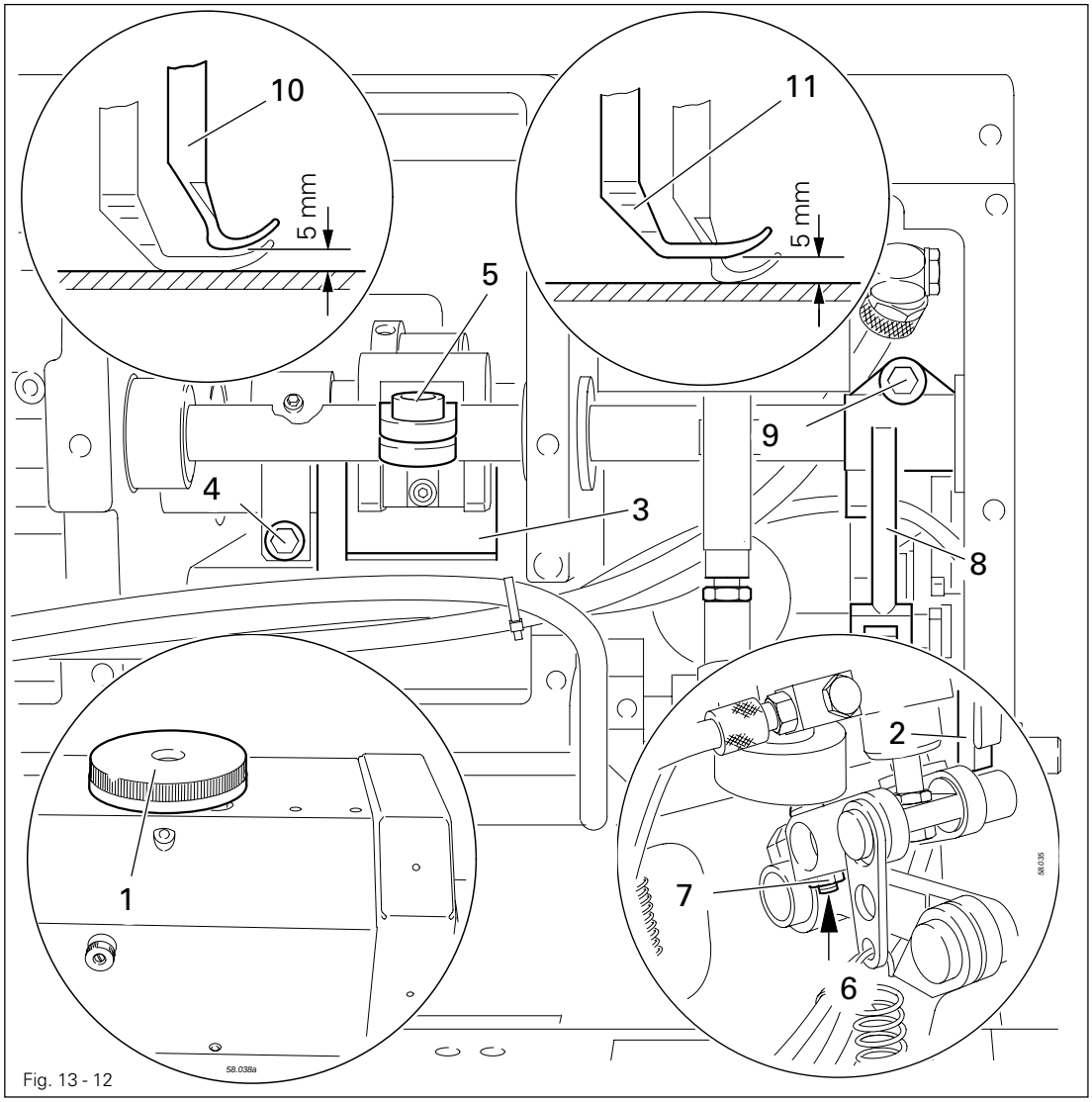

Fig. 13 - 12

- Remove the bottom feed dog and set knob **1** at "0".
- Unscrew the needle plate. Place the metal gauge over the opening of the needle plate cutout so that both sewing feet can rest on the metal gauge.
- Screw in stop screw **2** as far as possible.
- For pre-adjustment adjust crank **3** (screw **4**) so that crank **5** does not move when the balance wheel is turned.
- Set knob **1** at "5".
- For-adjustment turn ball stud **6** (locknut **7**) according to **requirement 1**.
- Adjust crank **8** (screw **9**) so that the top feed dog **10** and presser foot **11** are raised equally from the needle plate.
- Check **requirement 1** and readjust the ball stud **6** (nut **7**) if necessary.
- Turn stop screw **2** according to **requirement 2**.

13.05.12 Top-feed lifting motion

Requirement
When a lifting-presser stroke of **3 mm** is set and the descending needle is **3 mm** above the needle plate, the vibrating presser must just reach the needle plate.

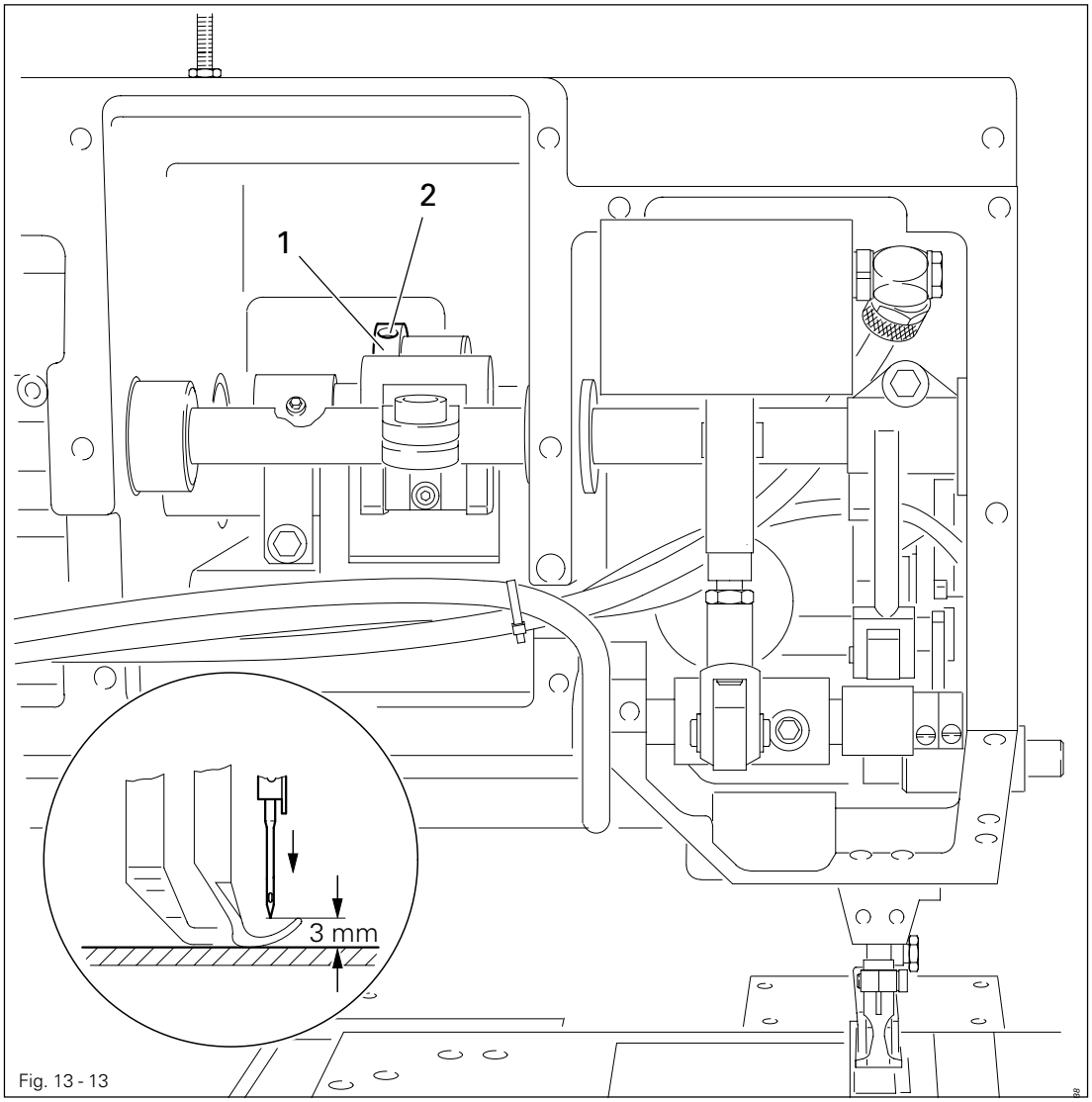

Fig. 13 - 13

- Turn eccentric **1** (screws **2**) according to **Requirement**.

13.05.13 Clearance between lifting presser and needle plate

Requirement
With the lifting presser raised there must be a clearance of approx. **18 mm** between lifting presser and needle plate.

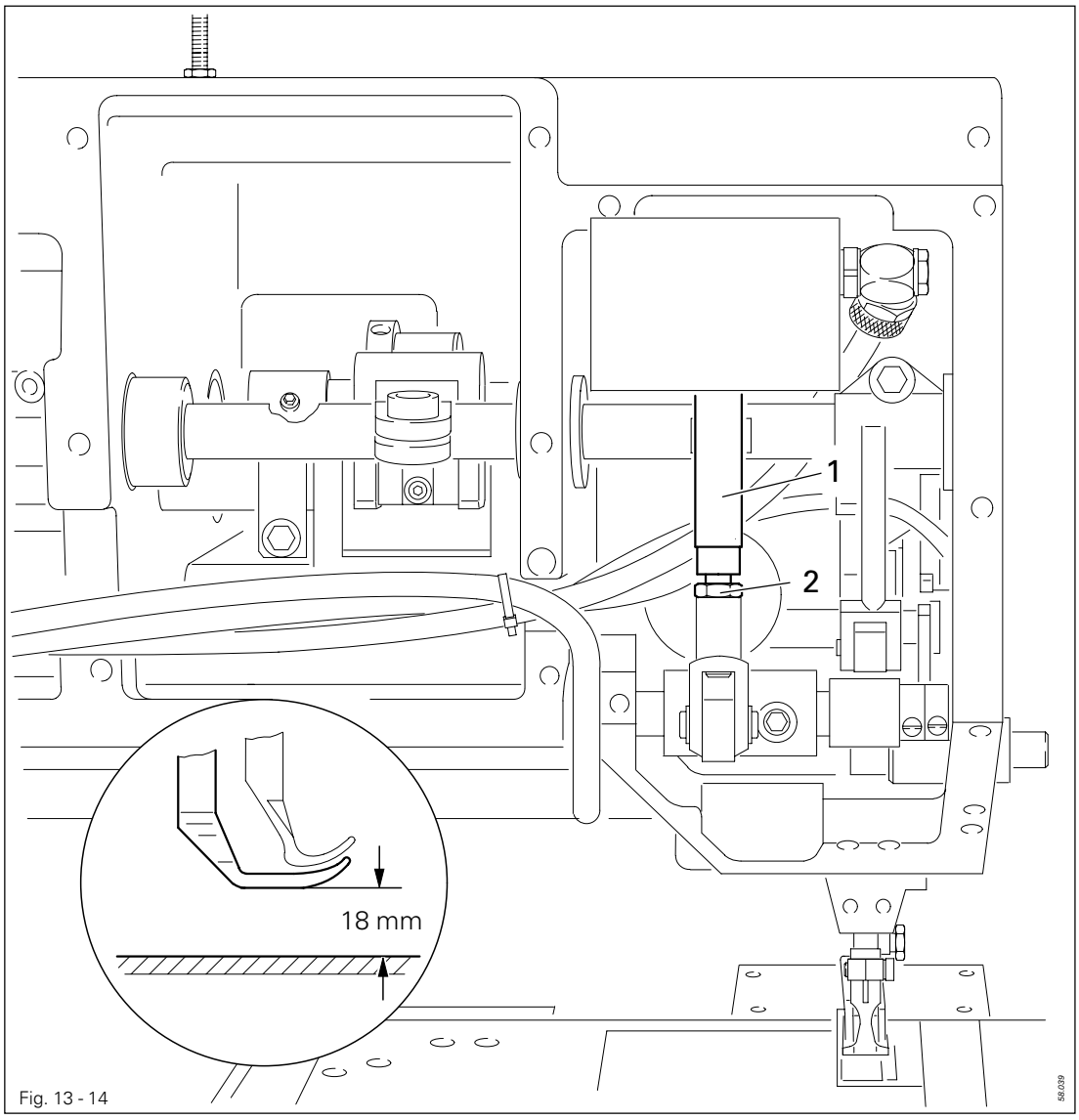

Fig. 13 - 14

- Raise the lifting presser and lock it with fixing key **1**.
- Turn plunger **1** (nut **2**) according to **Requirement**.

13.05.14 Bobbin winder

Requirement

1. When the bobbin winder is engaged, the winding spindle must be driven reliably; when it is disengaged, friction wheel **5** must not rest on driving wheel **1**.
2. The bobbin winder must wind evenly and switch itself off when the filled thread is about **1 mm** from the edge of the bobbin.

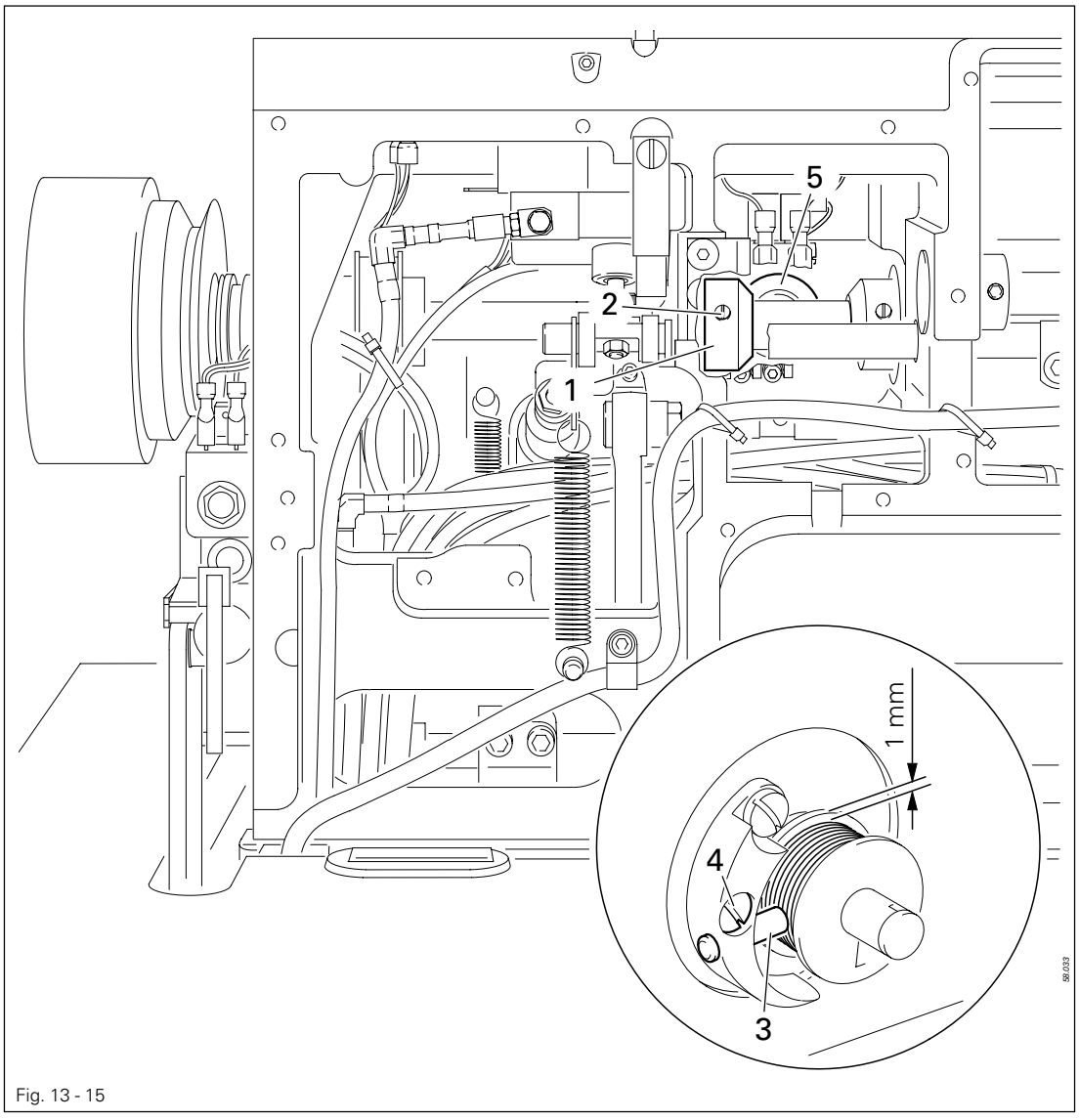

Fig. 13 - 15

- Position drive wheel **1** (screw **2**) according to **Requirement 1**.
- Position adjusting pin **3** (screw **4**) according to **Requirement 2**.

13.05.15 Thread check spring and regulator on the PFAFF 1525

Requirement

1. The movement of thread check spring **7** must be completed when the needle point enters the material.
2. When the thread loop is opened to its largest amount while being passed around the sewing hook, thread check spring **7** must rise slightly from rest **1**.

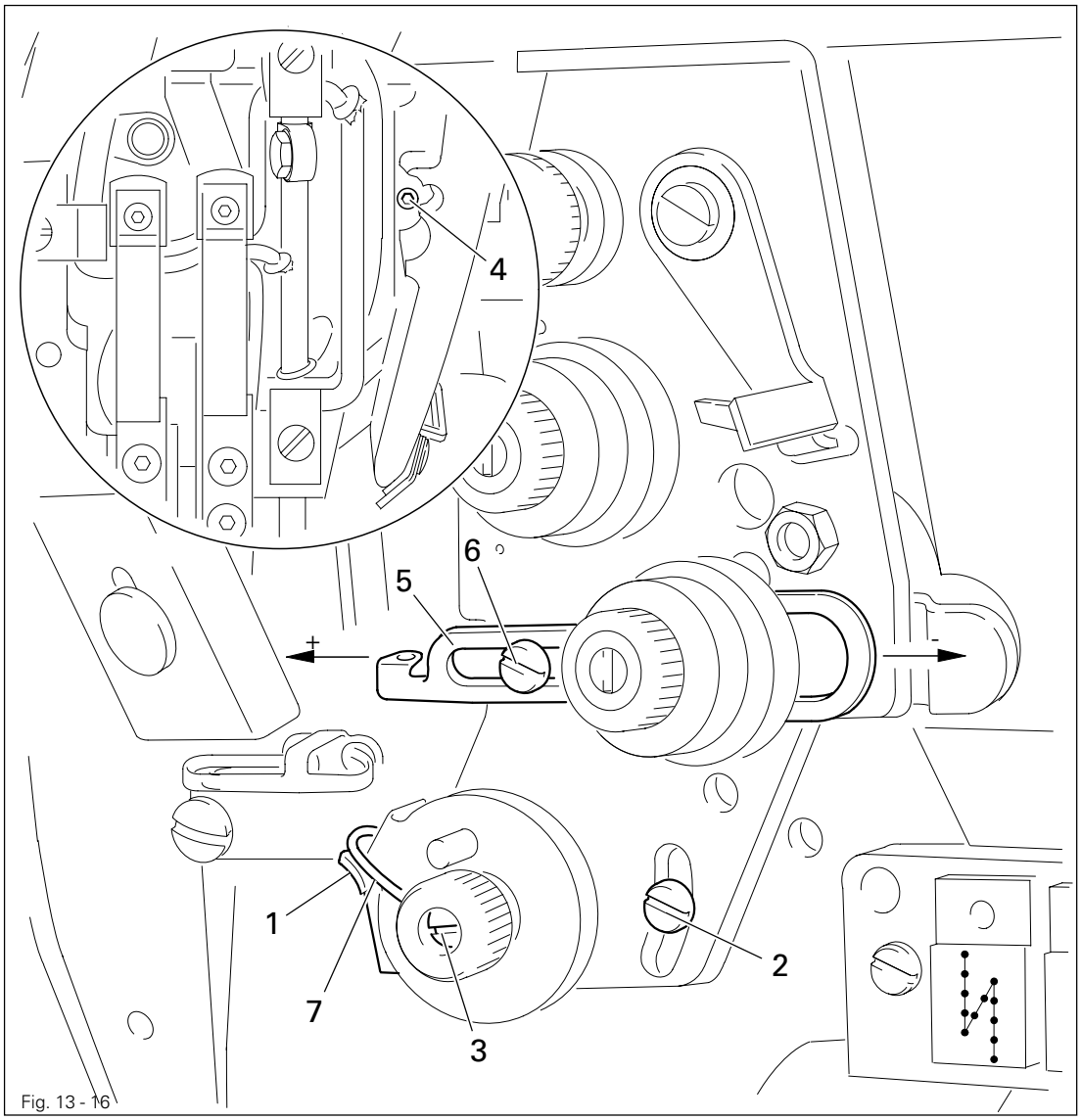

Fig. 13 - 16

- Position rest **1** (screw **2**) according to **Requirement 1**.
- To adjust the spring tension, turn screw **3** (screw **4**).
- Position thread regulator **5** (screw **6**) according to **Requirement 2**.

For technical sewing reasons it may be necessary to deviate from the indicated spring stroke or spring tension.
Move thread regulator **5** (screw **6**) to " + " (= more thread) or " - " (= less thread).

13.05.16 Thread check springs and regulators on the PFAFF 1526

Requirement

1. The movement of thread regulators **3** and **6** must be completed when the needle enters the material.
2. When the thread loop is opened to its largest amount while being passed around the sewing hook, thread check springs **3** and **6** must rise slightly from rests **1** and **9**.

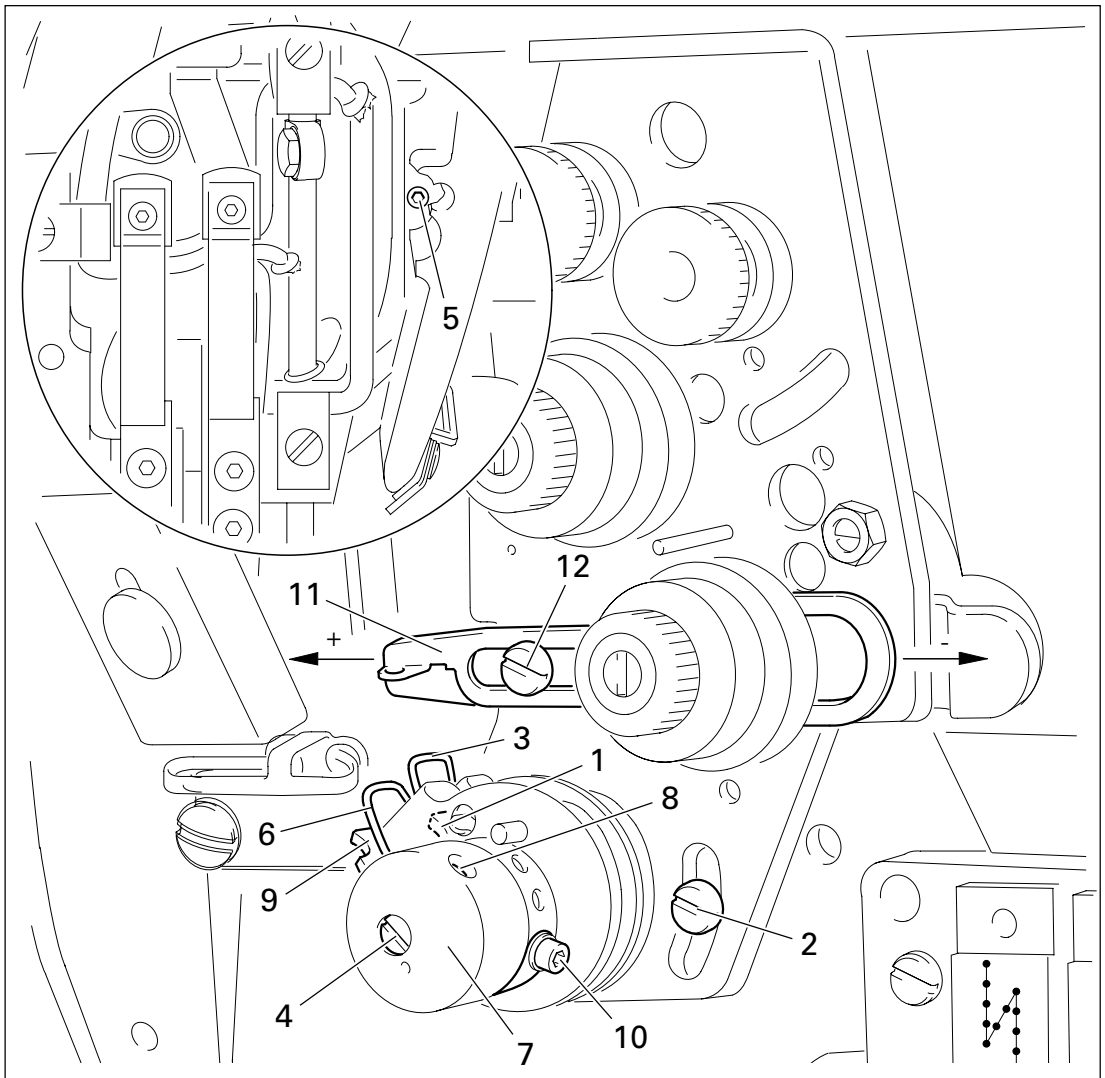

Fig. 13 - 17

- Position rest **1** (screw **2**) according to **Requirement 1**.
- To adjust the tension of thread check spring **3**, turn screw **4** (screw **5**).
- To adjust the tension of thread check spring **6**, turn sleeve **7** (screw **8**).
- Position rest **9** (screw **10**) according to **Requirement 1**. (If the adjustment range is too small, rest **9** can be screwed into another hole.)
- Position thread regulator **11** (screw **12**) according to **Requirement 2**.

For technical sewing reasons it may be necessary to deviate from the indicated spring stroke or spring tension.
Move thread regulator **11** (screw **12**) to " + " (= more thread) or " - " (= less thread).

13.05.17 Speed reduction when the stroke is increased

Requirement

1. With a lift of 2.5 mm the speed should be reduced to 2800 spm, or to 2700 spm on model "D"
2. With a 4.5 mm stroke the speed should be reduced to 2200 spm.

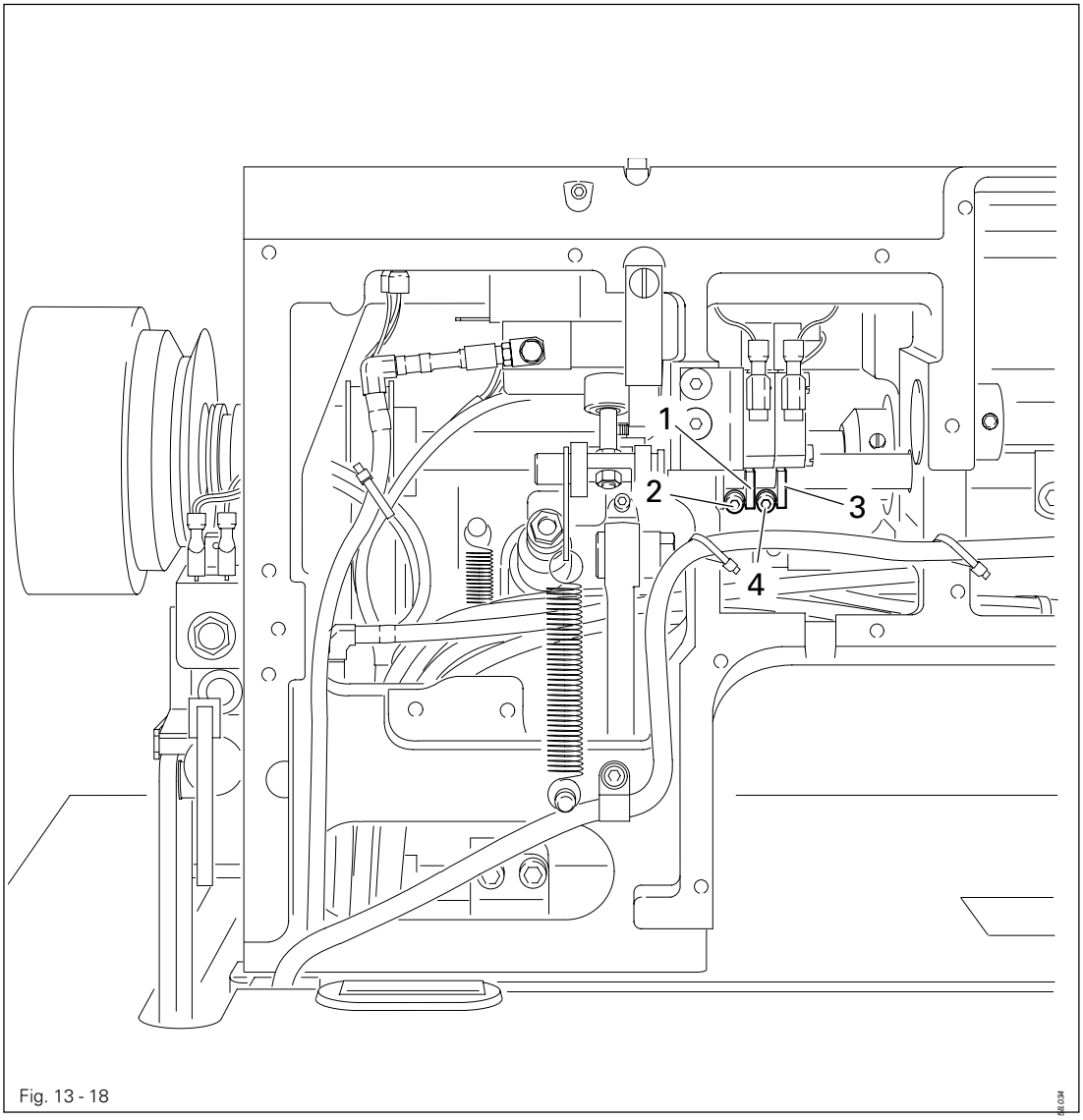

Fig. 13 - 18

- Adjust trip **1** (screw **2**) according to **requirement 1**.
- Adjust trip **3** (screw **4**) according to **requirement 2**.

The switch position of both switches can be controlled on the operating panel (see Hardware test in the motor instruction manual).

13.05.18 Needle-thread tension release

Requirement

1. When stop **4** is actuated by hand there must be a clearance of at least **0.8 mm** between tension discs **3**.
2. When stop **4** is in its resting position the tension must be engaged.

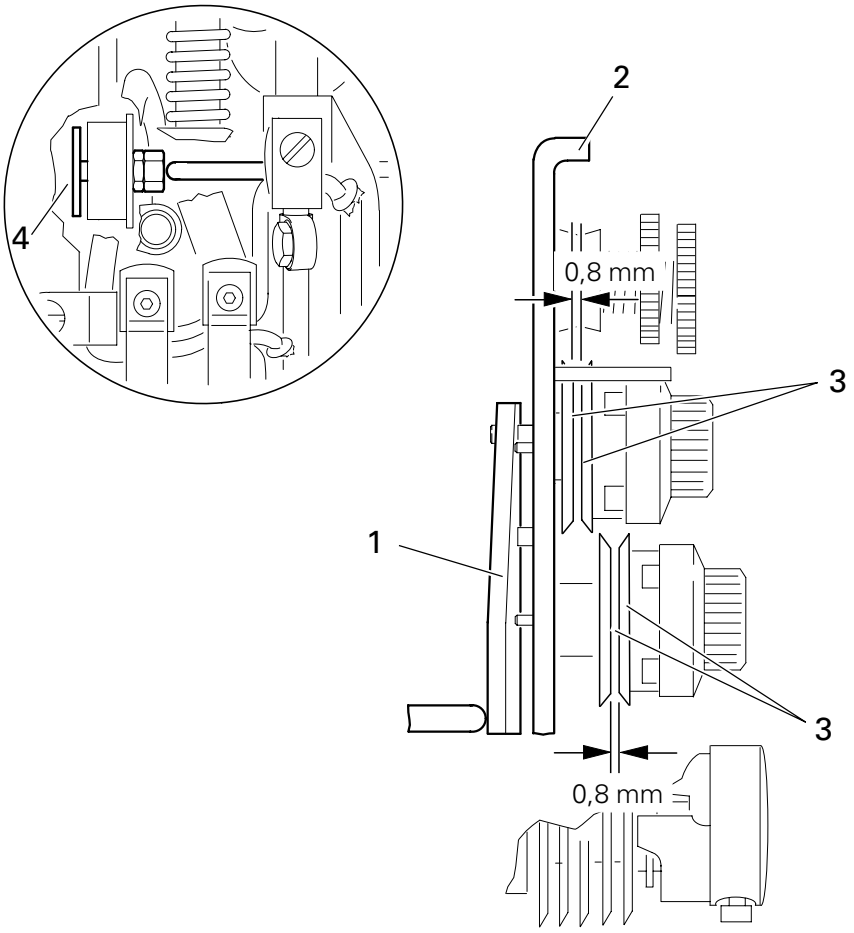

Fig. 13 - 19

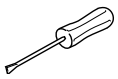

- Position pressure plate **1** behind tension mounting plate **2** according to **Requirement**.

13.05.19 Presser foot pressure

Requirement
The material must be reliably fed, even at the highest sewing speed.

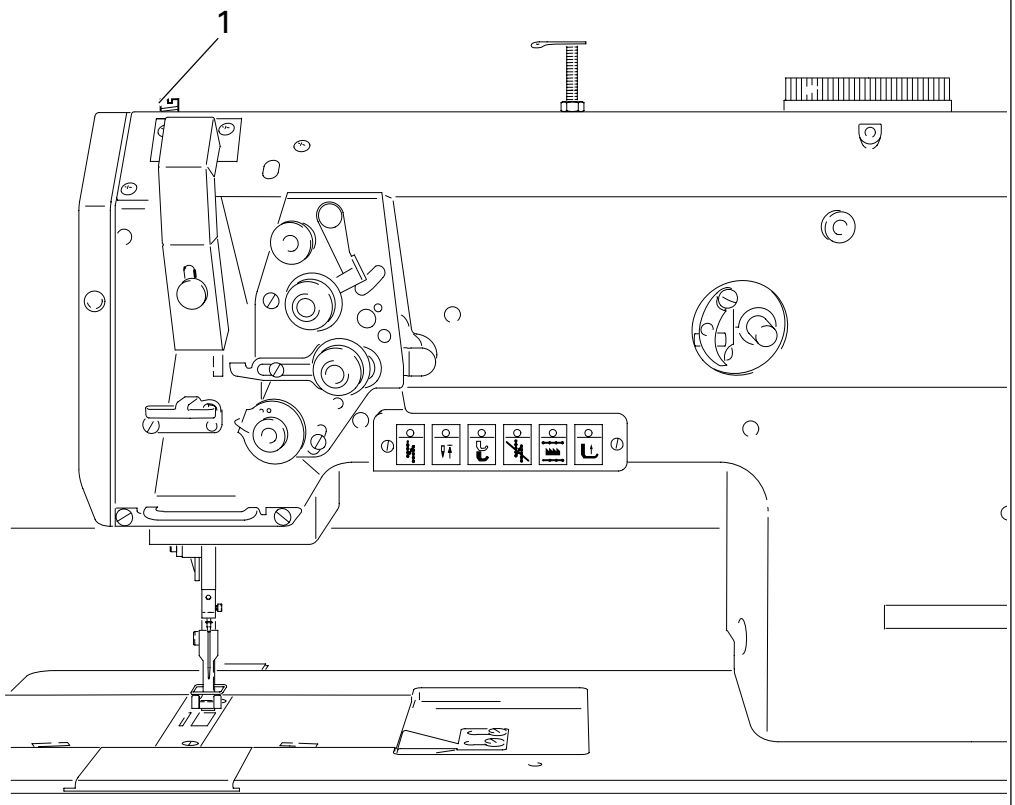

Fig. 13 - 20

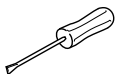

- Adjust screw **1** according to **Requirement**.

13.05.20 Lubrication

Requirement
After a running time of ten seconds a thin film of oil must appear on a paper strip **1** held at the side of the sewing hook.

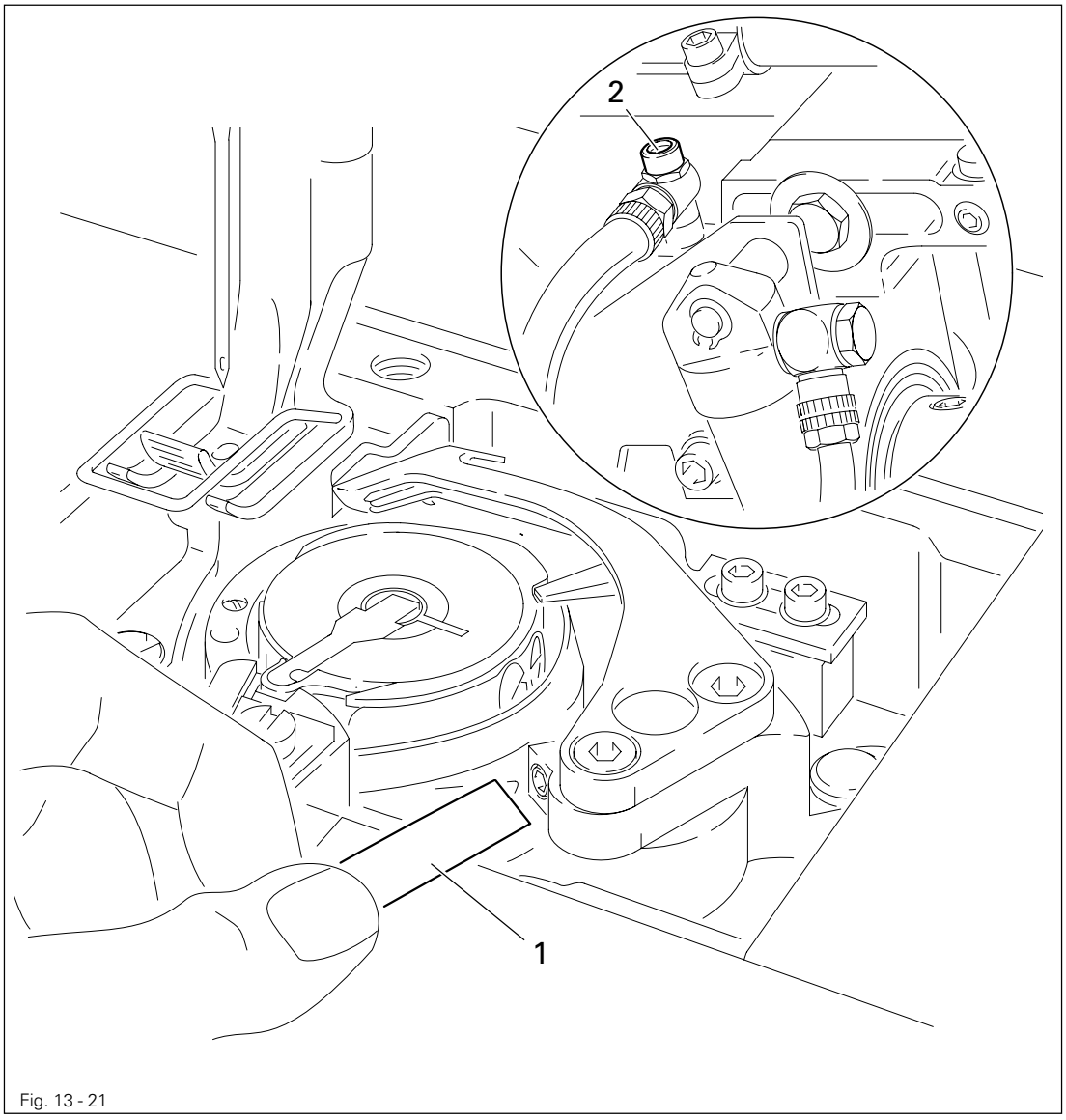

Fig. 13 - 21

- Check that machine has been filled with oil and that oil lines are free of air.
- Run the machine for **2 to 3 mins.**

Do not put your hands into the sewing area while the machine is running!
Danger of injury by moving parts!

- With the machine running, hold a paper strip **1** at the hook and check according to **Requirement**.
- If necessary, regulate oil on screw **2**.

13.05.21 Re-engaging the slip-clutch

Clutch **1** is adjusted at the works. In the case of a thread jamming, clutch **1** will disengage, in order to avoid damage to the hooks.
The following describes how to re-engage clutch **1**.

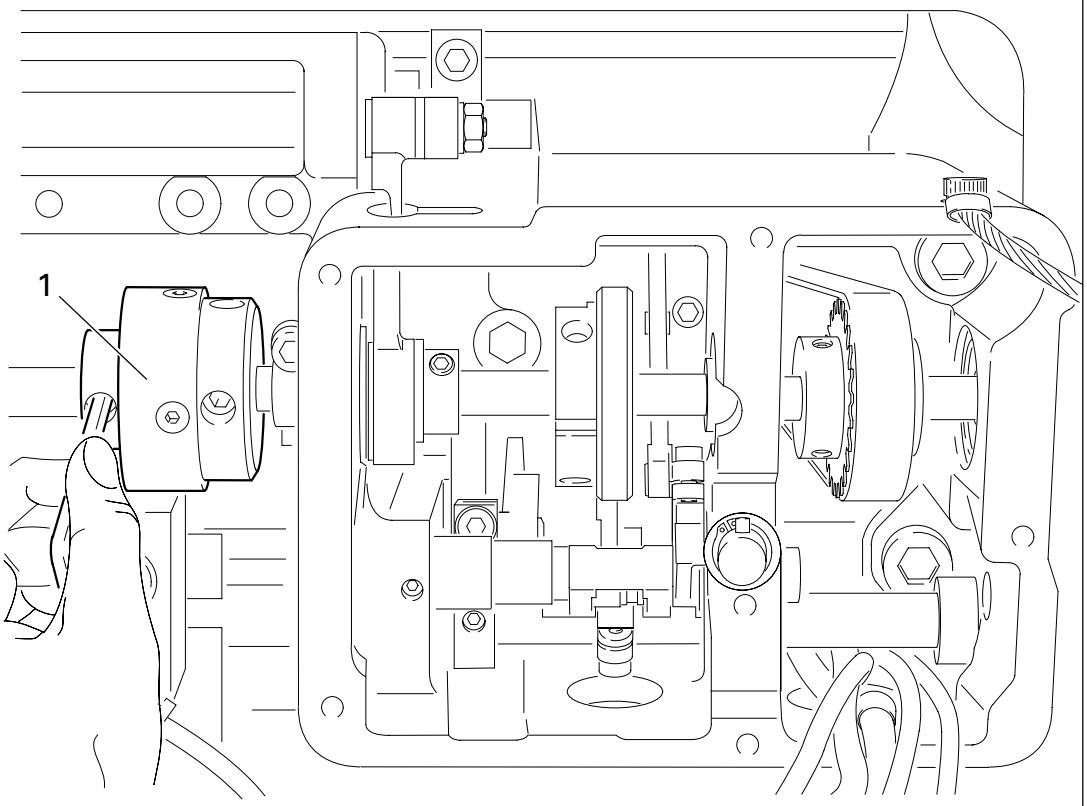

Fig. 13 - 22

- Remedy jammed thread fault.
- Hold clutch **1** firmly, as shown in **Fig. 13-22**, and turn the balance wheel until clutch **1** re-engages.

13.06 Adjusting the edge trimmer -731/02

13.06.01 Neutral position of knife

Requirement
When the edge trimmer is disengaged, the knife must not move when the balance wheel is turned.

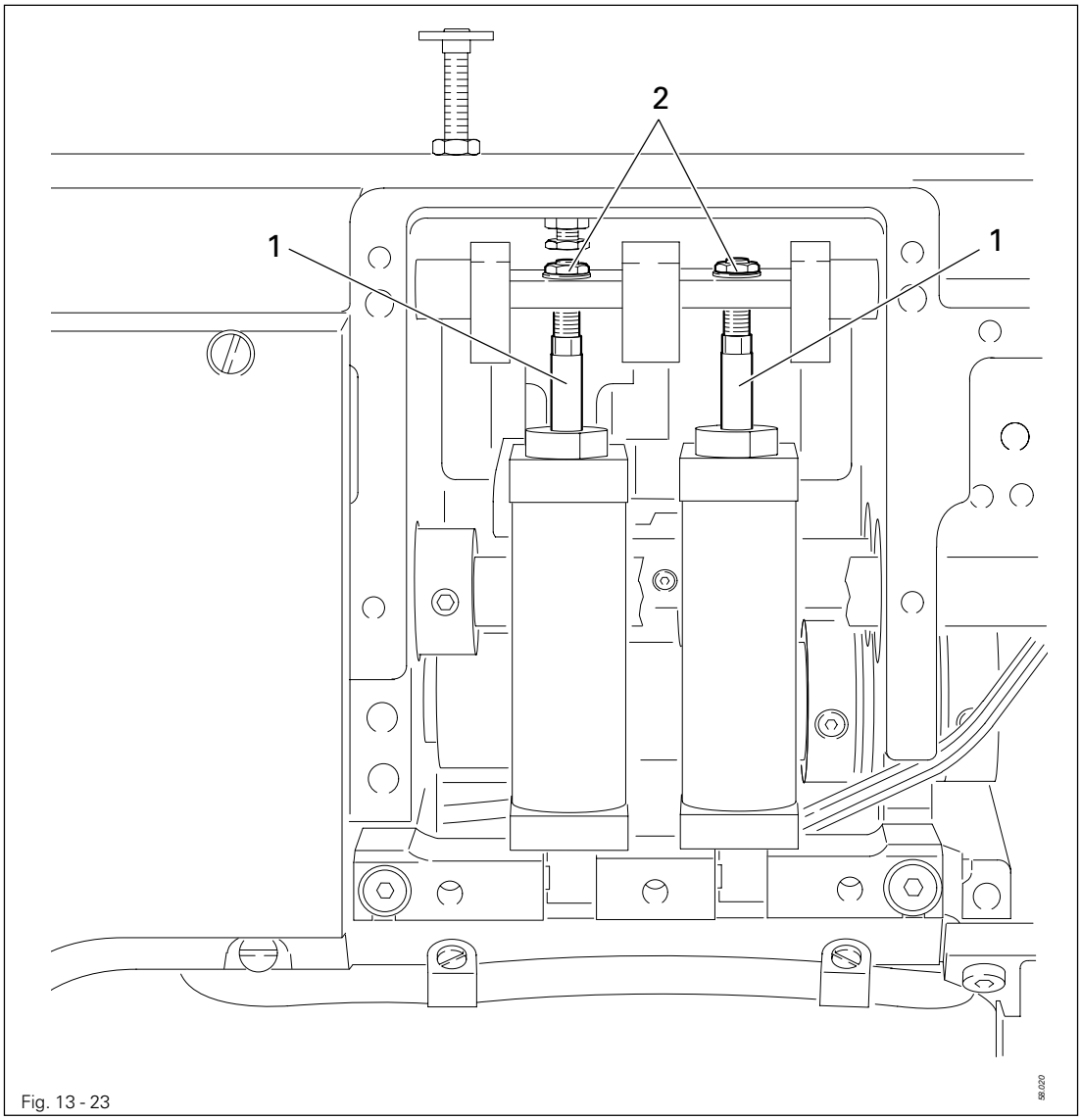

Fig. 13 - 23

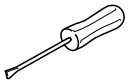

- Turn on compressed air and disengage edge trimmer.
- Turn cylinder plunger **1** (nut **2**) according to **Requirement**.

13.06.02 Knife stroke

Requirement
The maximum knife stroke must be **9 mm**

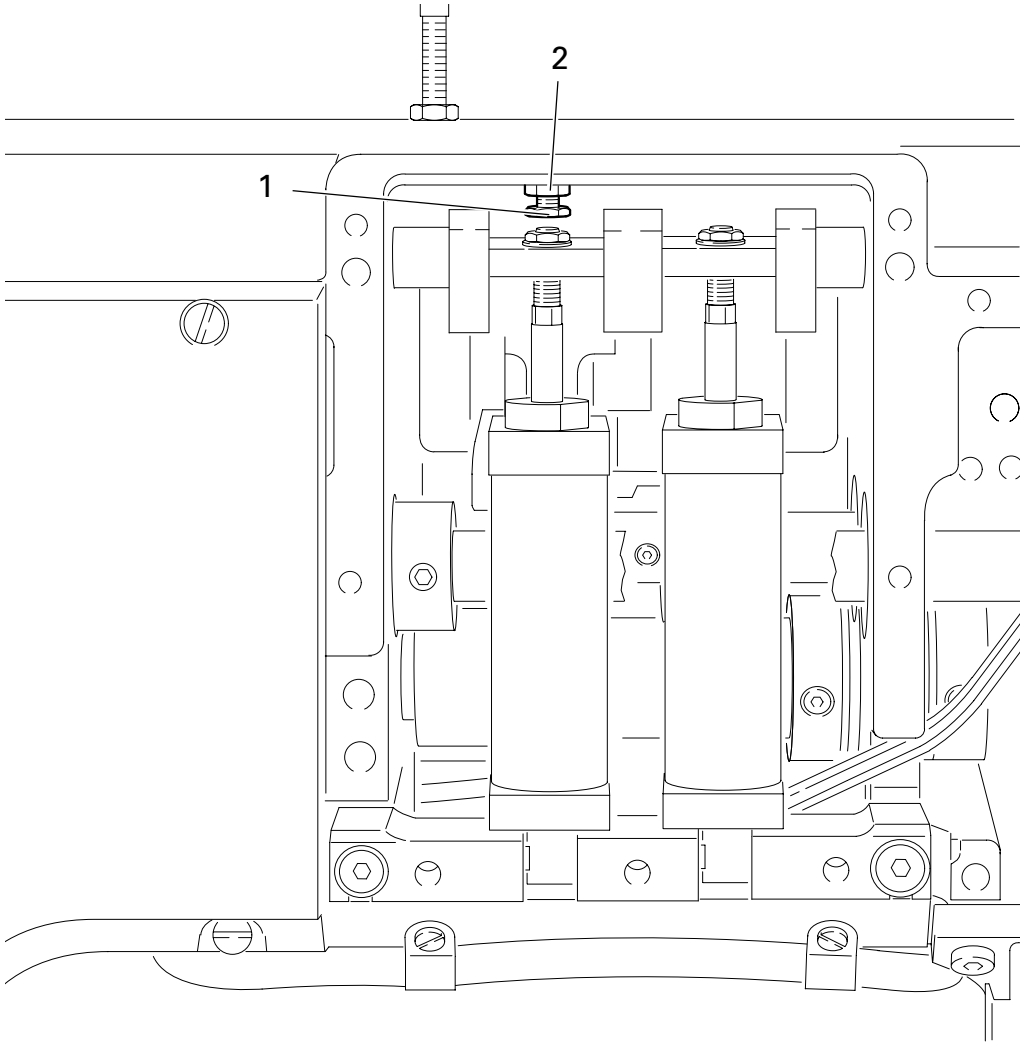

Fig. 13 - 24

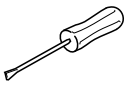

- Engage edge trimmer.
- Adjust screw **1** (nut **2**) according to **Requirement**.

13.06.03 Cutting stroke

Requirement
With the edge trimmer engaged and the needle bar at b.d.c. the knife must be at t.d.c.

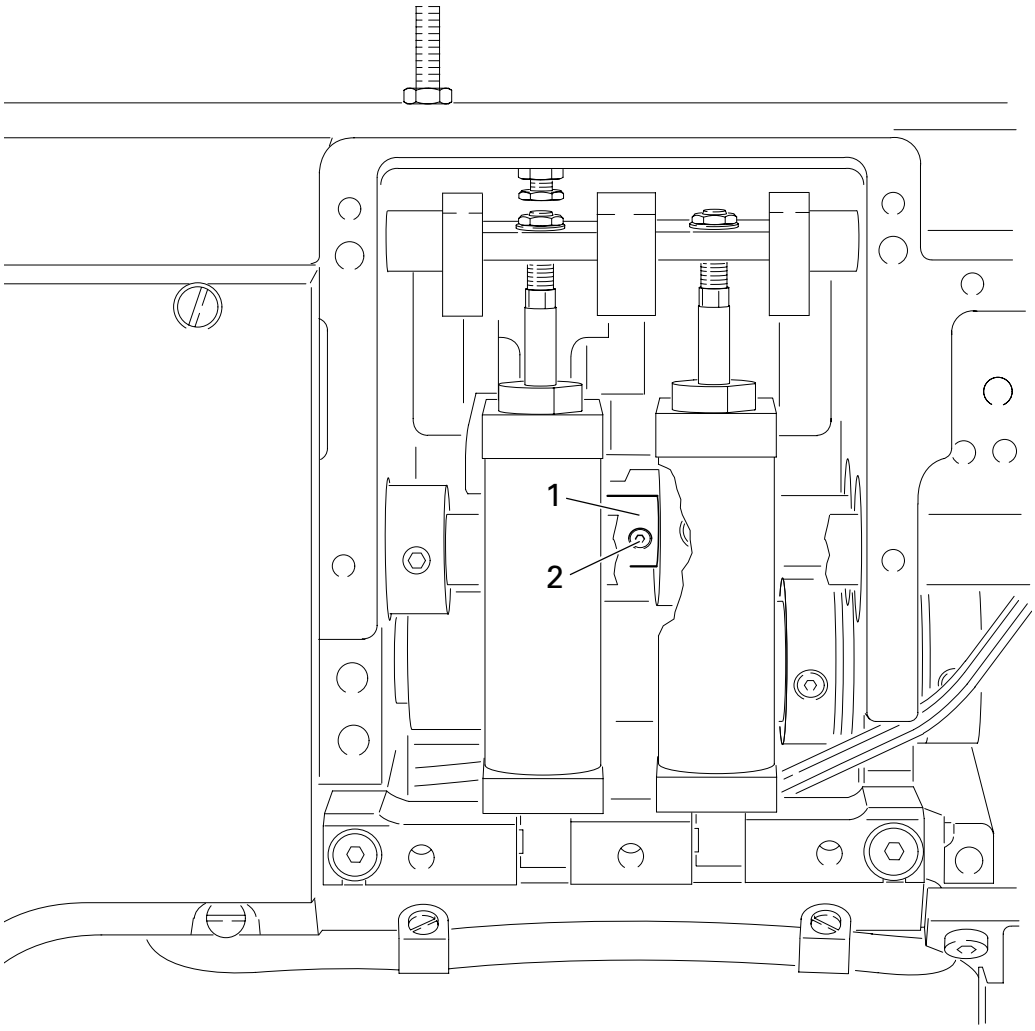

Fig. 13 - 25

- Engage edge trimmer and set needle bar at b.d.c.
- Turn eccentric **1** (two srews **2**) according to **Requirement**.

13.06.04 Actuating lever

Requirement
With the edge trimmer disengaged there must be a clearance of **0.5 mm** between base **3** and the housing.

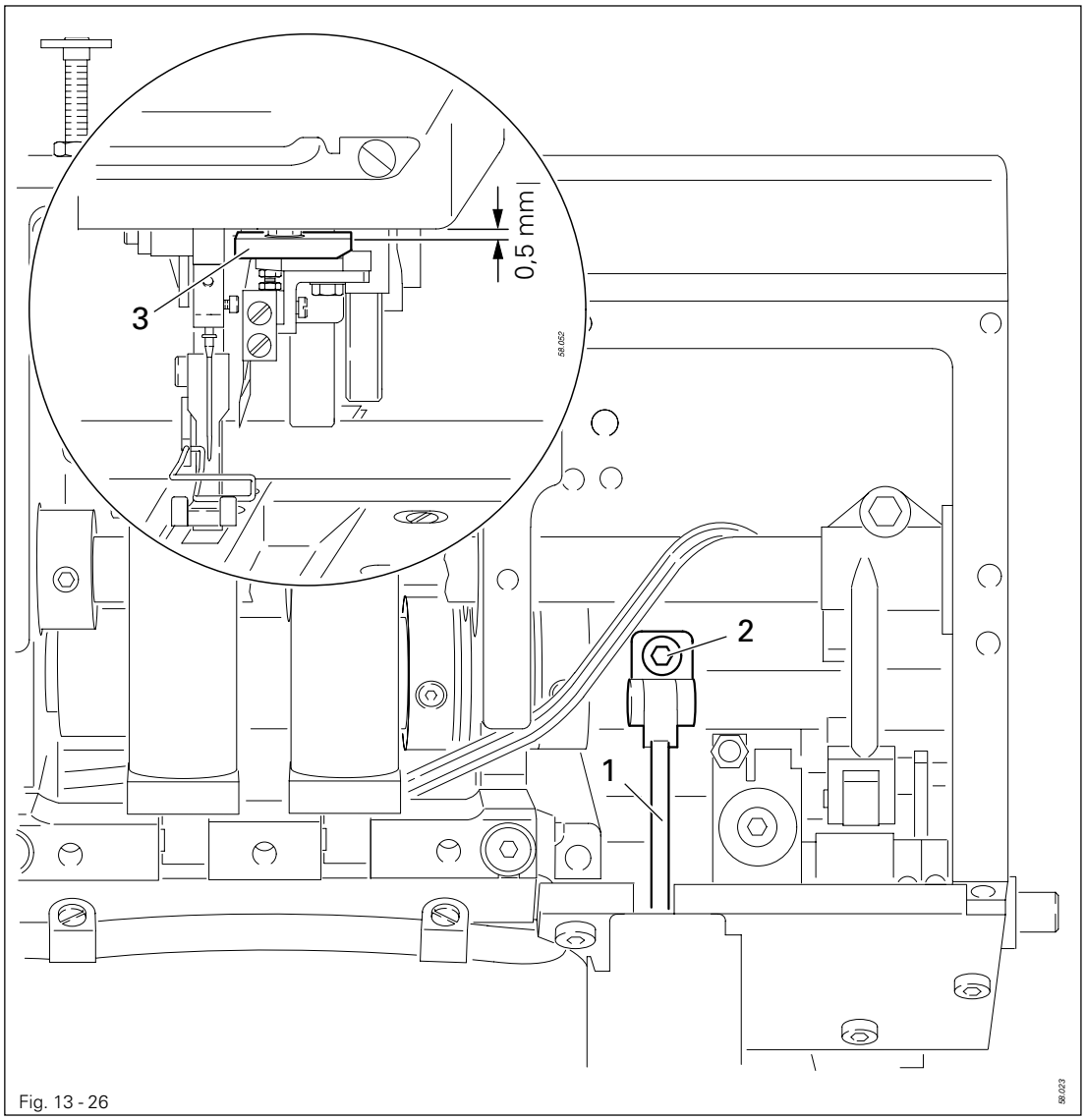

Fig. 13 - 26

- Re-position lever **1** (screw **2**) according to **Requirement**.

13.06.05 Knife height

Requirement
When the knife is at b.d.c. the front of the knife cutting edge must be about **0.5 mm** under the top edge of the stationary knife.

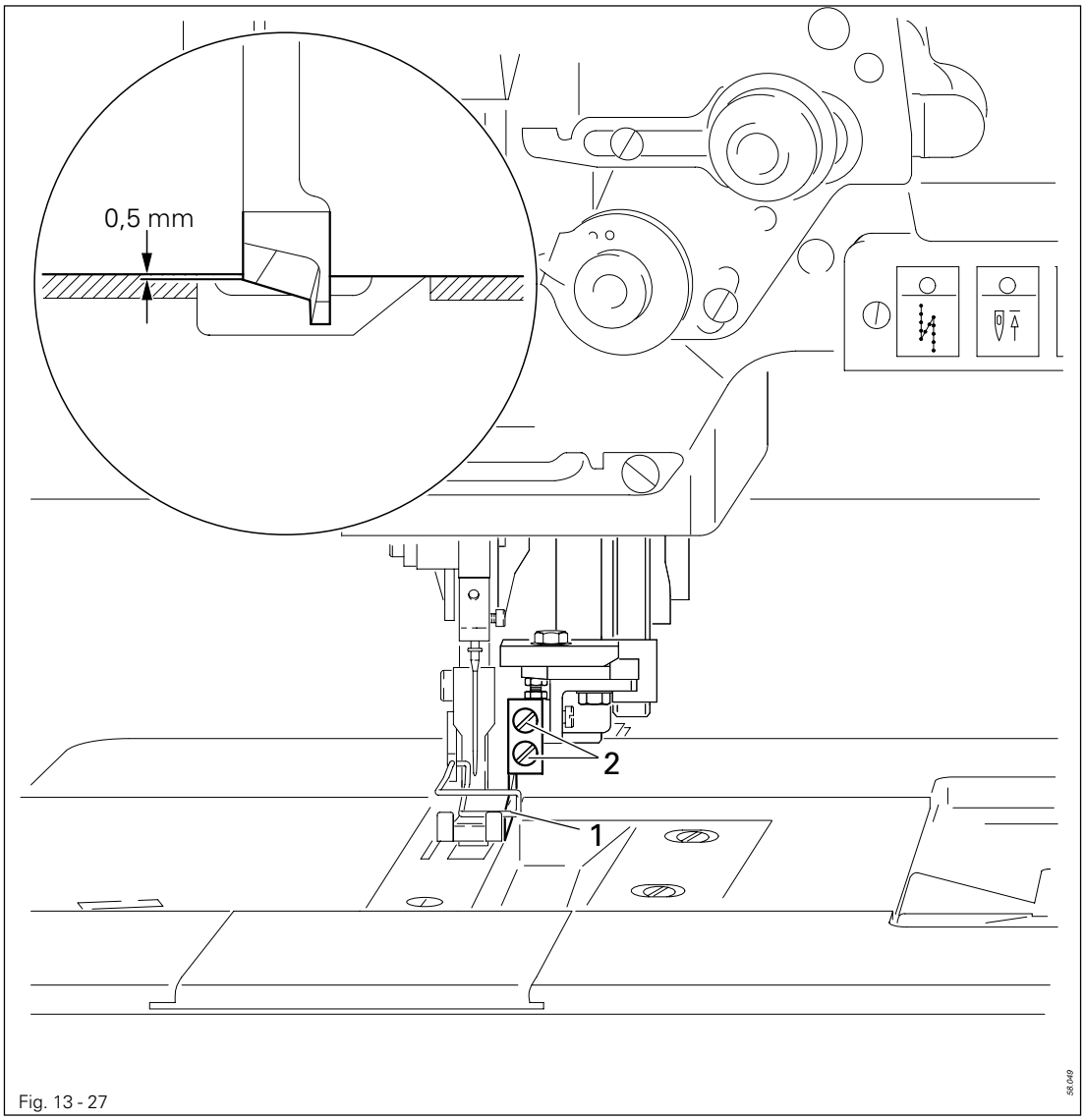

Fig. 13 - 27

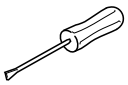

- Engage edge trimmer and set knife at its lowest position.
- Re-position knife **1** (screws **2**) according to **Requirement**.

13.06.06 Knife position in sewing direction

Requirement
With the needle bar at b.d.c. the middle of the knife must be at "needle centre."

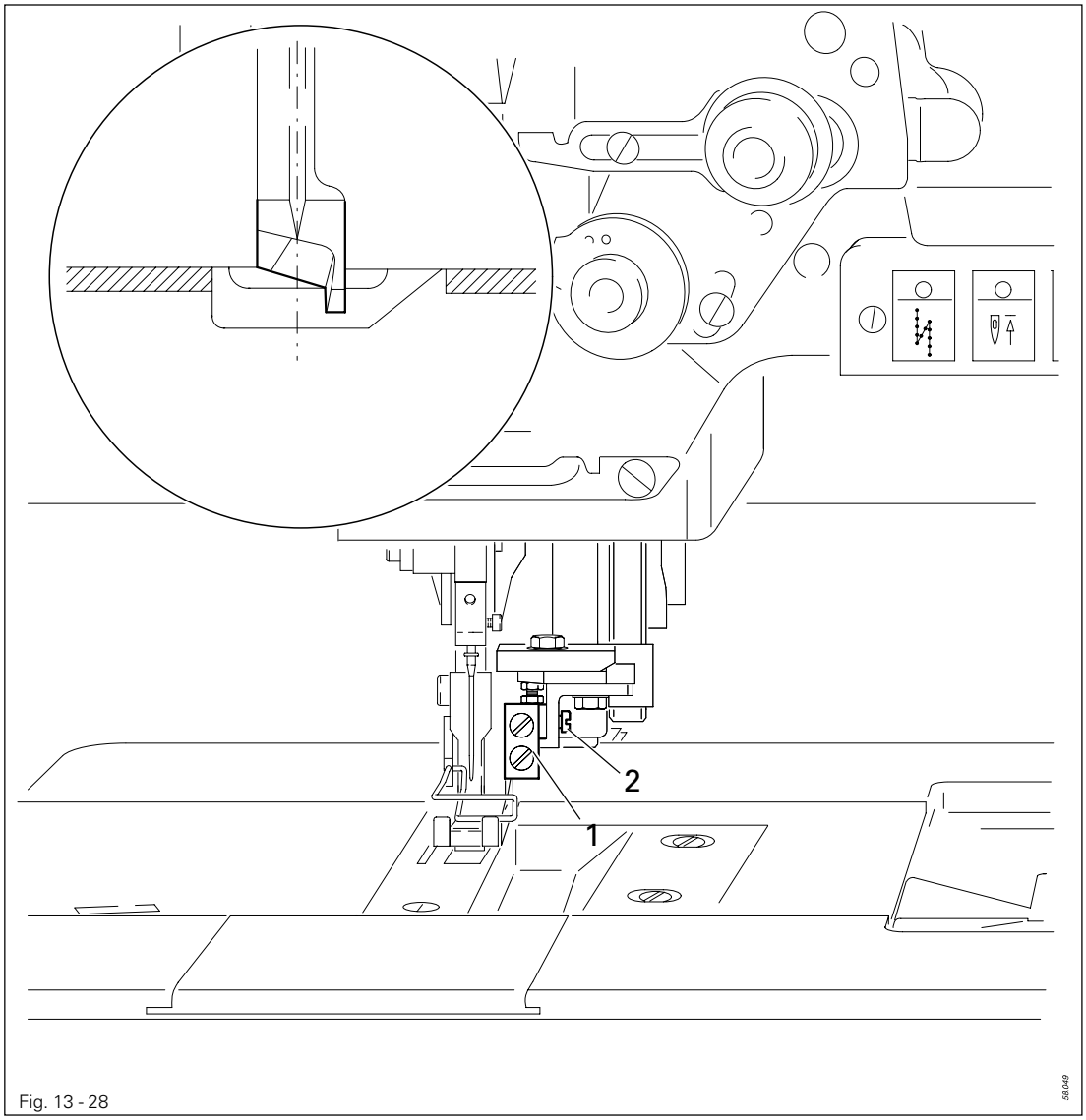

Fig. 13 - 28

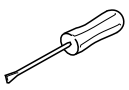

- Re-position knife mounting **1** (screw **2**) according to **Requirement**.

13.06.07 Knife position crosswise to sewing direction

Requirement

1. The knife must rest with light pressure against stationary knife **3**.
2. The knife must be at a slight angle to stationary knife **3** (shear action of approx. 2°).

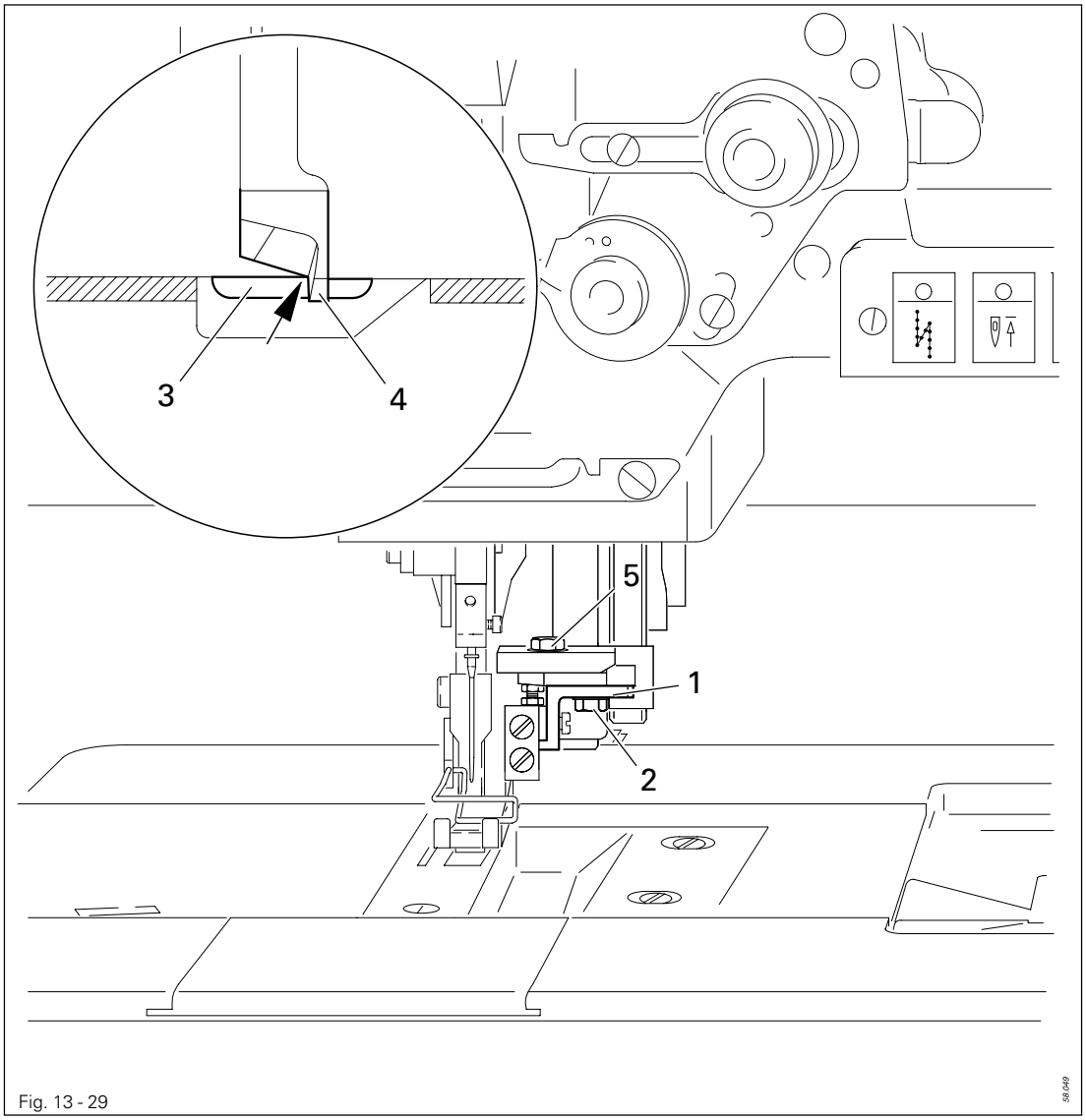

Fig. 13 - 29

- Adjust knife mounting **1** (screw **2**) acording to **Requirement 2**.
- Engage edge trimmer.
- Turn balance wheel to set rear of knife cutting edge in line with top edge of stationary knife **3** (see arrow).
- Set knife spur **4** (screw **5**) against stationary knife **3** without pressure.

During the cutting action the slight angular off-set of the knife to stationary knife **3** causes a slight pressure (**Requirement 1**).

- Set knife at its lowest position; there must then be a small clearance bewteen back edge of knife and stationary knife **3** (shear action).
- Repeat adjustment if necessary.

13.07 Adjusting the thread trimmer 900/81 and -900/86

13.07.01 Resting position of roller lever/radial position of control cam

Requirement

1. When cylinder plunger **1** is retracted there must be a clearance of **0.1 mm** between outer edge of control cam **6** and the roller of lever **5**.
2. When cylinder plunger **1** is retracted and the take-up lever is at t.d.c., control cam **6** must just move roller lever **5** to its resting position

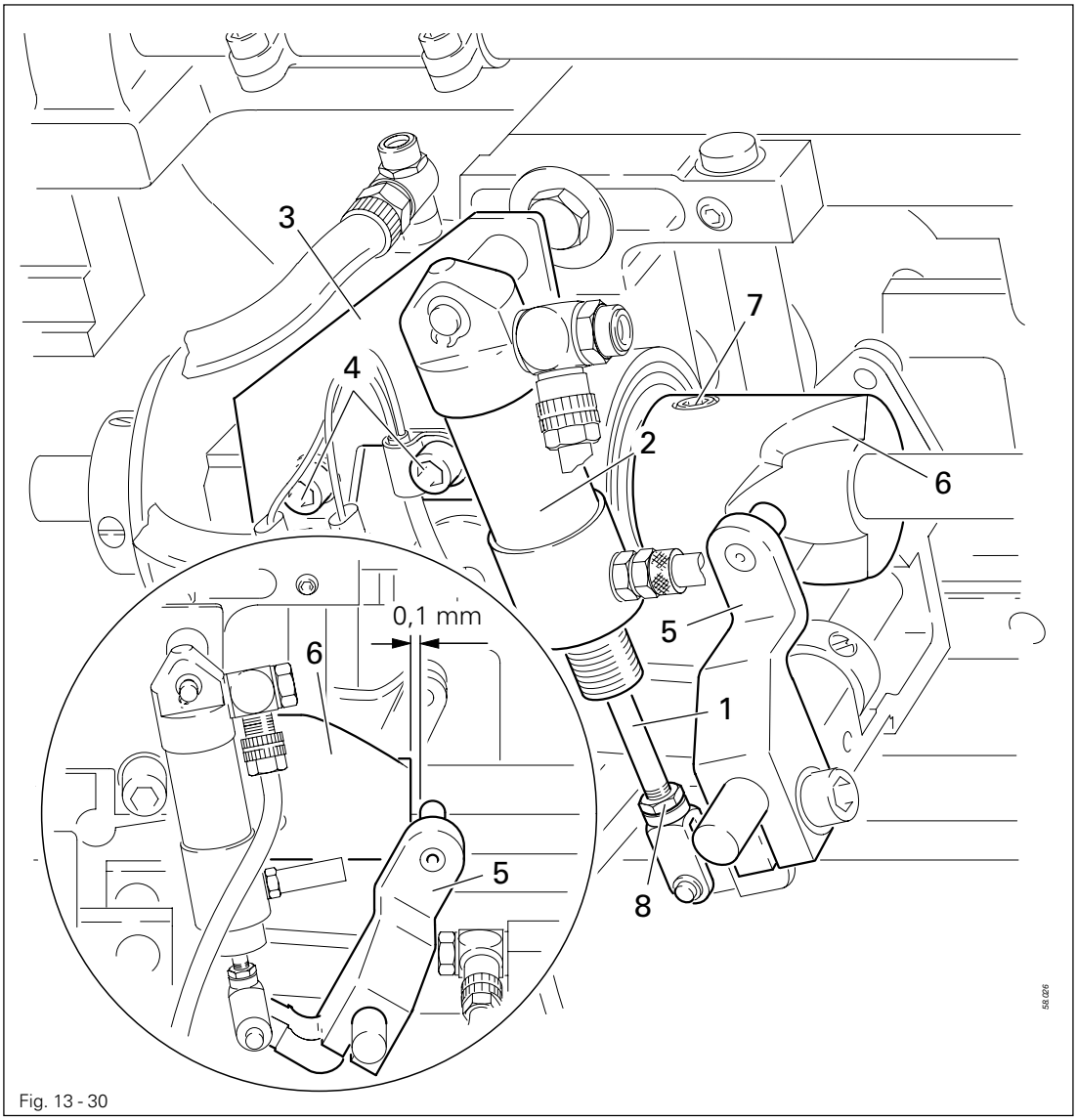

Fig. 13 - 30

- Fully retract plunger **1** into cylinder **2**.
- Re-position cylinder mounting **3** (screws **4**) according to **Requirement 1**.
- Push roller lever **5** into control cam **6**.
- Set take-up lever at t.d.c. and turn control **6** (screws **7**) according to **Requirement 2**.

On cylinder plunger **1,** about **1 mm** of thread must protrude above locknut **8**.

13.07.02 Thread-catcher height

Requirement

The lower edge of thread catcher **3** must clear bobbin **4** case by about **0.8 mm**.

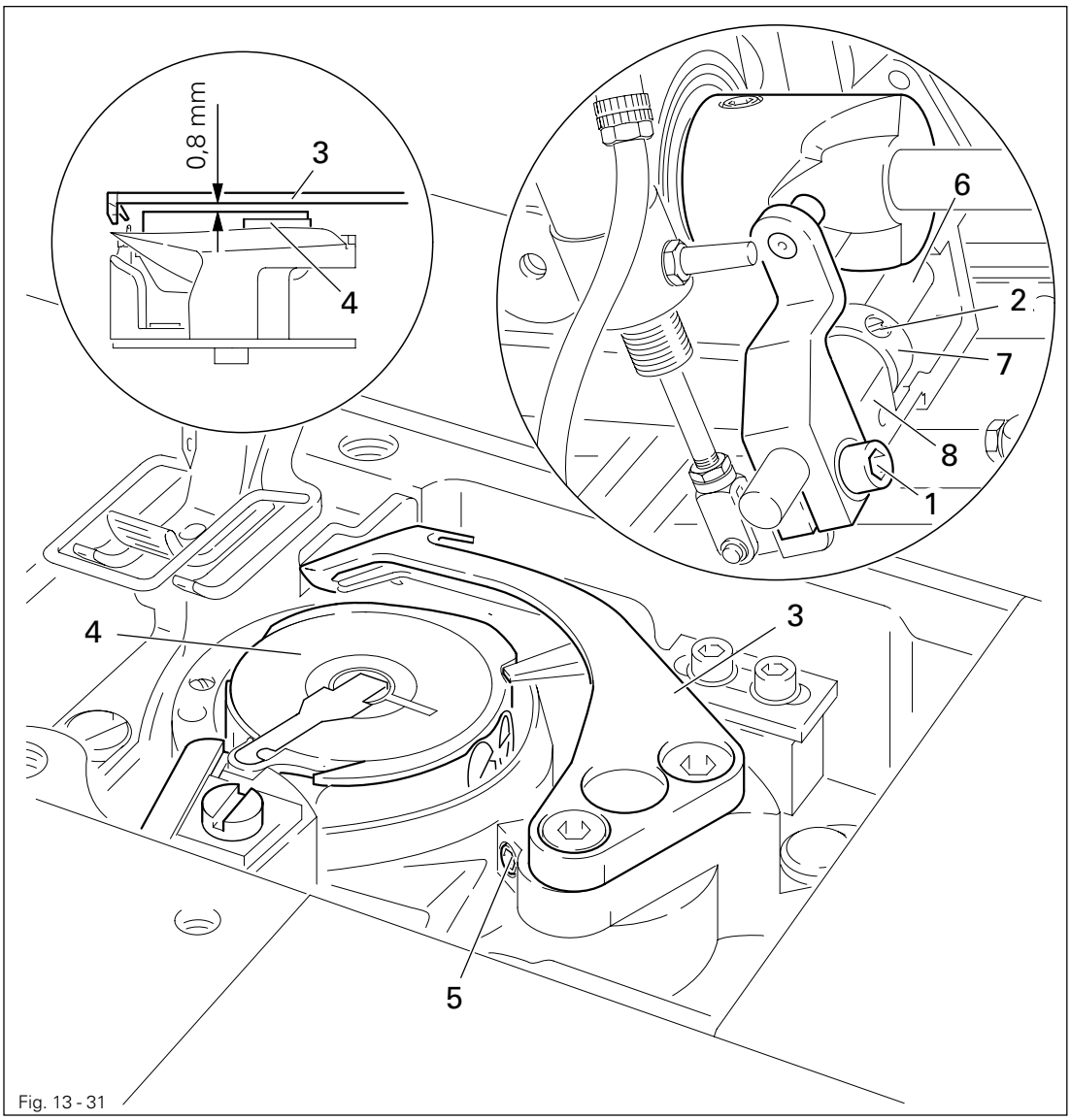

Fig. 13 - 31

- Loosen screws **1** and **2**.
- Set thread catcher **3** above bobbin case **4**.
- Re-position thread catcher **3** (screw **5**) according to **Requirement.**
- Balance out the vertical play of shaft **6**, set fixing collar **7** against bearing housing **8** and tighten screw **2**.

For further adjustments leave screw **1** untightened.

On the -900/86 the thread catcher model differs from the illustration.
The setting is the same.

13.07.03 Thread catcher position

Requirement
When the thread catcher is in its resting position, the edges of thread catcher **4** and knife **5** must be flush (see arrow).

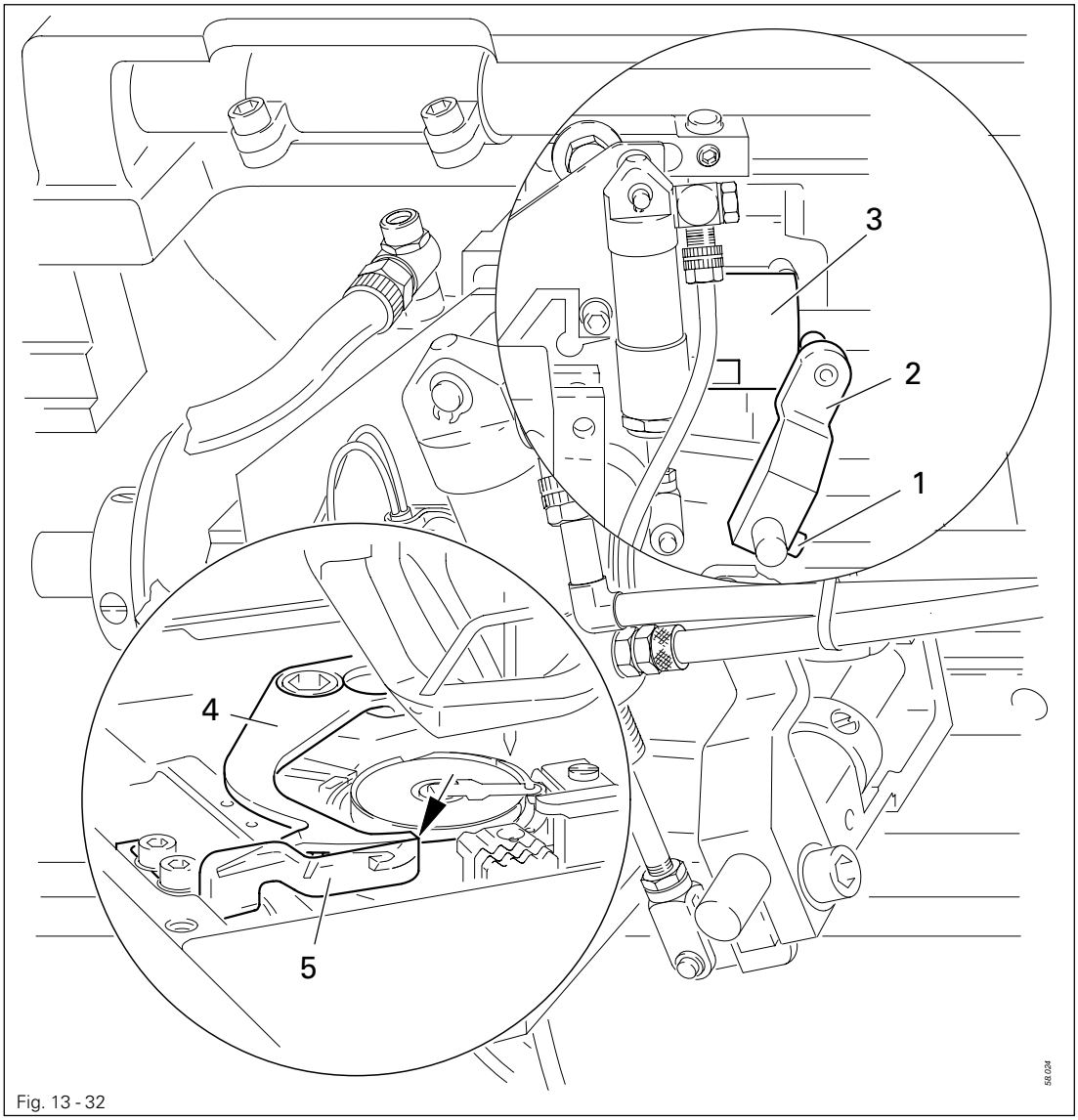

Fig. 13 - 32

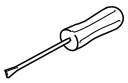

- Set needle bar at b.d.c. and push roller lever **2** against control cam **3**.
- Turn thread catcher **4** according to **Requirement**.
- Tighten screw **1**.



On the -900/86 the thread catcher model differs from the illustration.
The setting is the same.

13.07.04 Knife height

Requirement
With the thread trimmer in its resting position the edges of thread catcher **3** and knife **1** must be flush (see arrow).

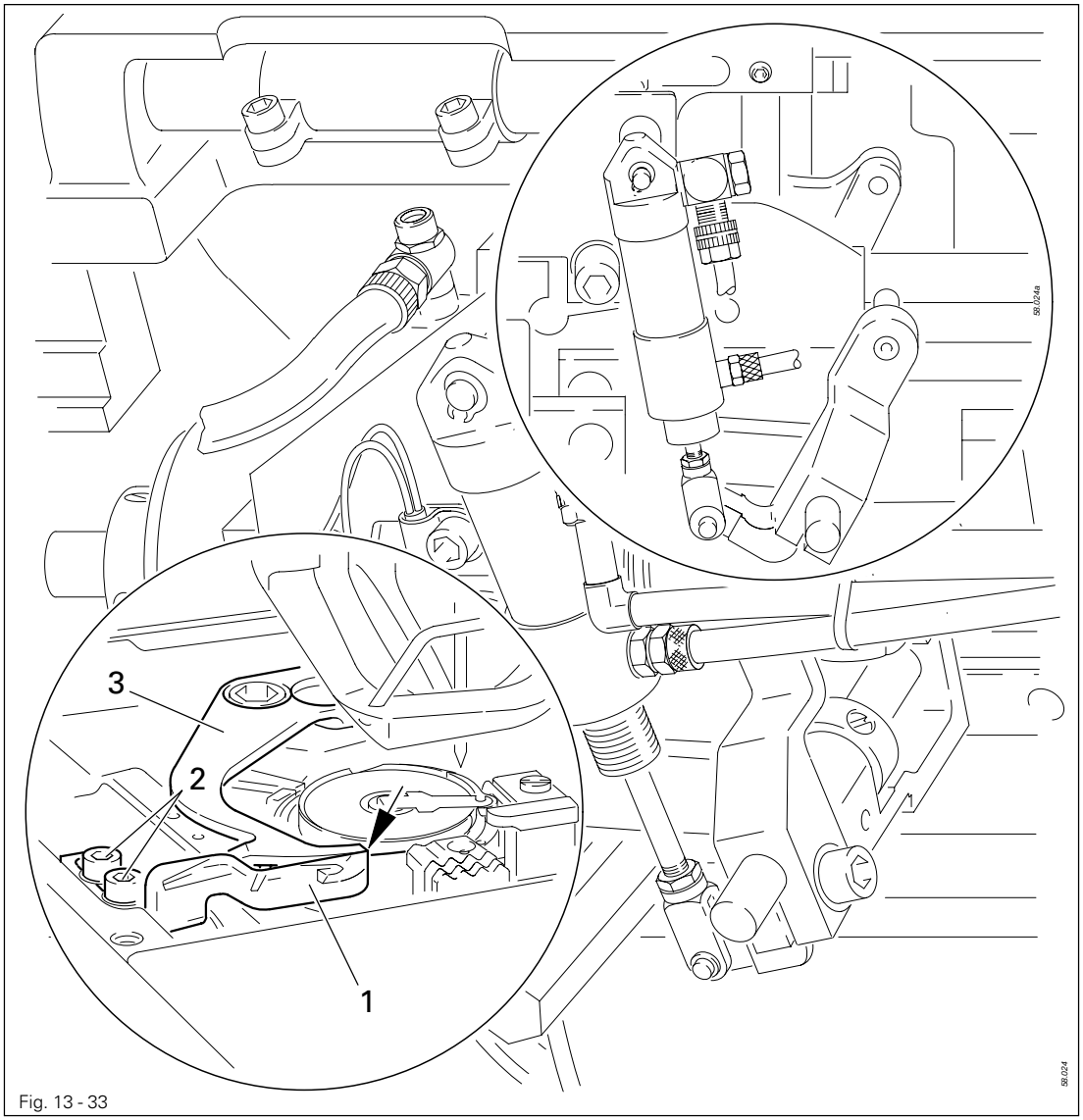

Fig. 13 - 33

- Check knife height according to **Requirement**.

To adapt the height of knife **1,** remove it (screws **2)** and fit shims (part No. 91-141 402-05) according to **Requirement** .

On the -900/86 the thread catcher model differs from the illustration. The setting is the same.

13.07.05 Knife pressure

Requirement
When the front edge of thread catcher **3** has passed the cutting edge by half, knife **4** must rest with light pressure on the edge of the catcher.

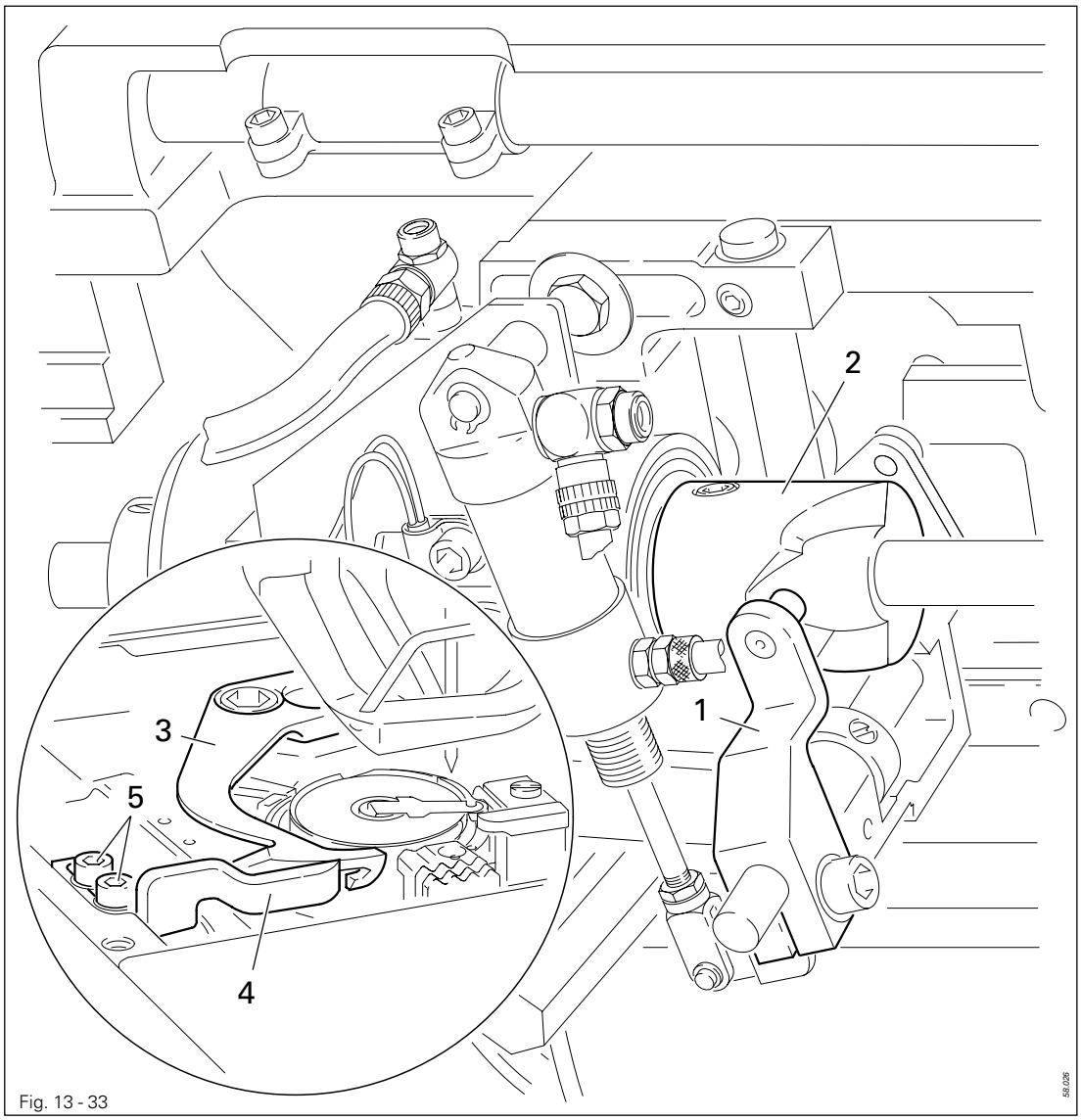

Fig. 13 - 33

- Set take-up lever at b.d.c. and push roller lever **1** into control cam **2**.
- Turn balance wheel until front edge of catcher **3** has passed cutting edge of knife **4** by half.
- Re-position knife **4** (screws **5**) according to **Requirement**.

After adjustment, check again according to **Chapter 13.07.03 Thread catcher position**.

On the -900/86 the thread catcher model differs from the illustration.
The setting is the same.

13.07.06 Bobbin-thread retaining spring

Requirement

Retaining spring **1** must

1. not be deflected during the thread catcher movement,
2. reliably retain bobbin thread **4** after cutting, and
3. not hinder removal and replacment of the bobbin case.

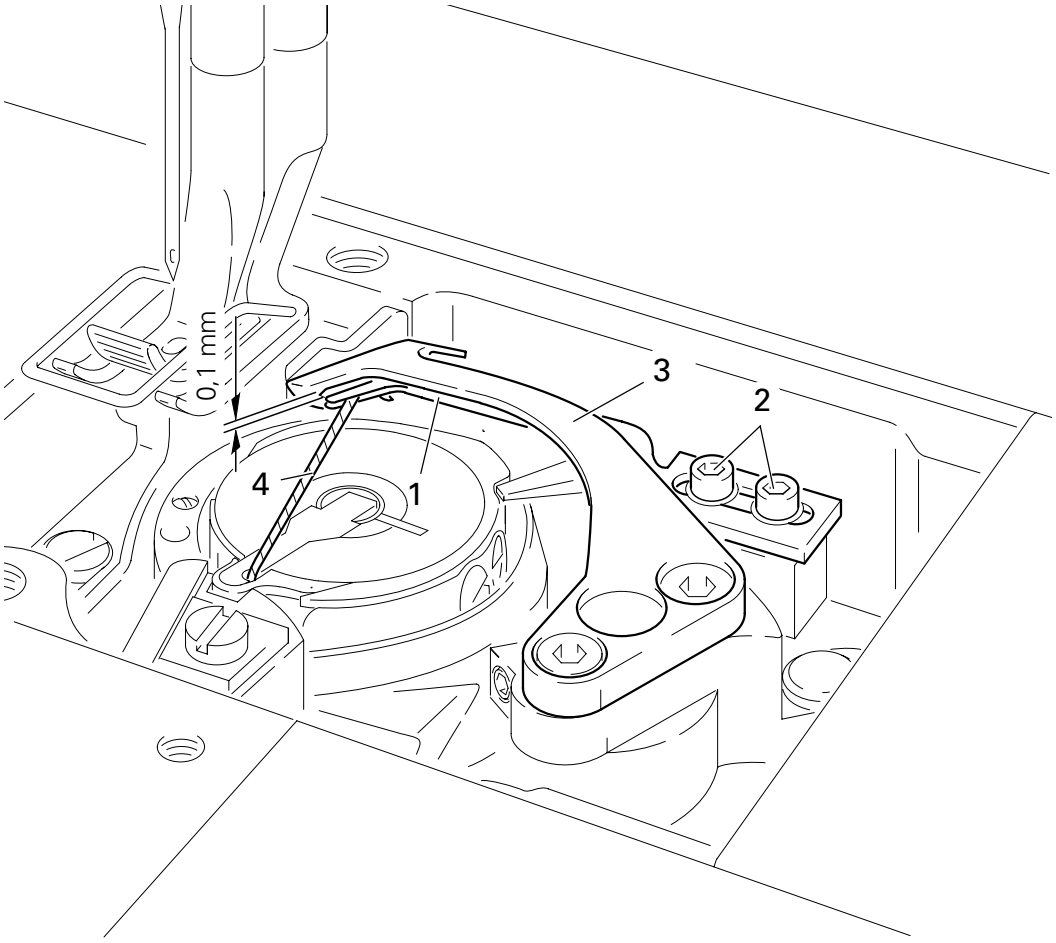

Fig. 13 - 35

- Set thread trimmer at its resting position.
- Position retaining spring **1** (screws **2**) so that the retaining lips are as close as possible to the inside wall and to the front edge of thread catcher **3**.
- Bend retaining spring **1** to set its height so that there is a clearance of about **0.1 mm** between top side of retaining spring **1** and thread catcher **3**.

On the -900/86 the thread catcher model differs from the illustration.
The setting is the same.

13.07.07 Thread catcher transmission crank (only on the PFAFF 1526)

Requirement
With the thread trimmer in its resting position the bearing points of roller **3**, roller lever **4** and ball-joint **5** must be aligned.

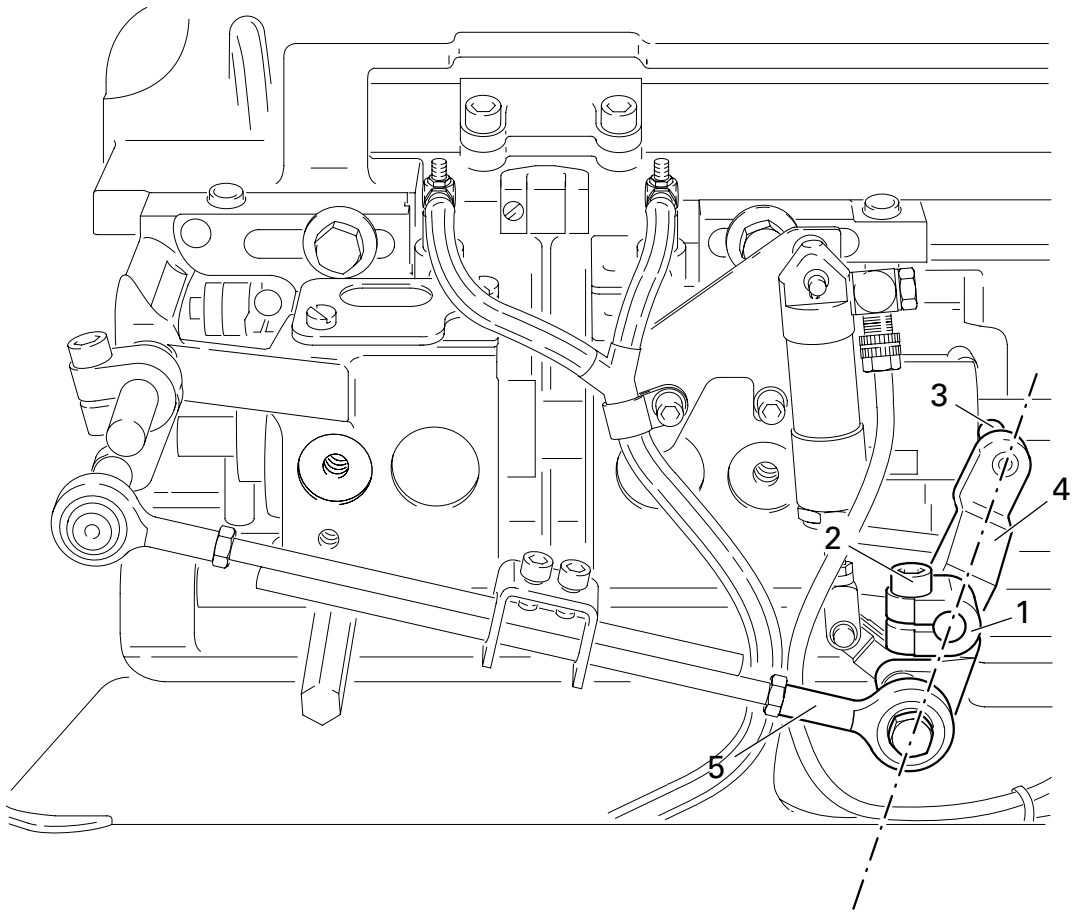

Fig. 13 - 36

- Set thread trimmer at resting position.
- Turn transmission crank **1** (screw **2**) according to **Requirement**.

13.07.08 Tansmission linkage (only on the PFAFF 1526)

Requirement
With the thread trimmer in its resting position, transmission cranks **3** and **4** must stand parallel with each other.

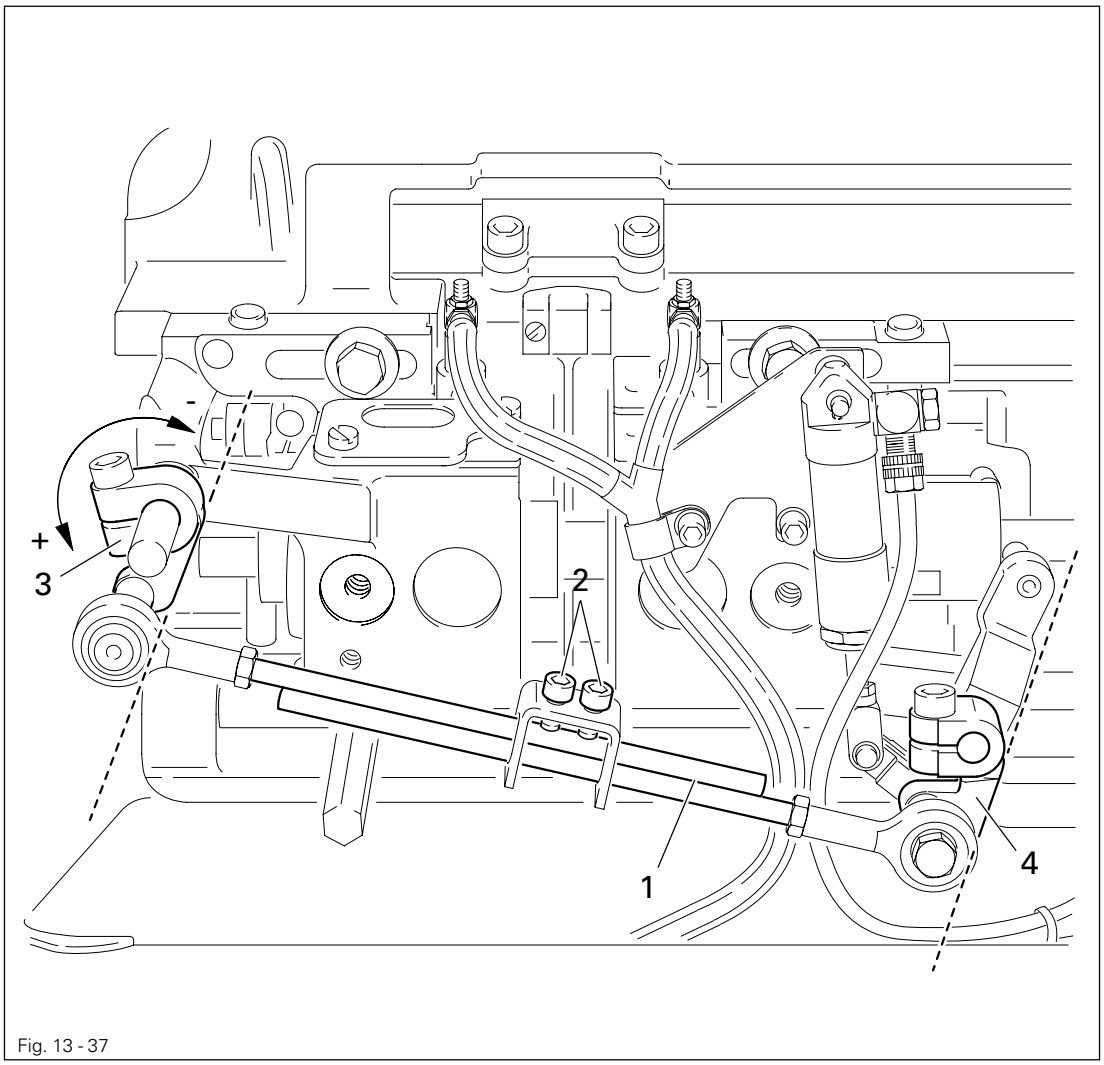

Fig. 13 - 37

- Set the thread trimmer at its resting position.
- Adjust transmission linkage **1** (screws **2**) according to **Requirement.**

If problems occur in thread catching on the left sewing hook, the catcher stroke can be increased (**+**) or decreased (**-**) by turning transmission crank **3**.

13.07.09 Manual cutting test

Requirement

1. When thread catcher **1** is on its forward stroke, it must not carry bobbin thread **3** forward too.
2. When thread catcher **1** is in its front position, the bobbin thread **3** must be positioned in the middle of the marked area (see arrow).
3. After the trimming action, both needle- and bobbin thread must be perfectly cut, and bobbin thread **3** retained.

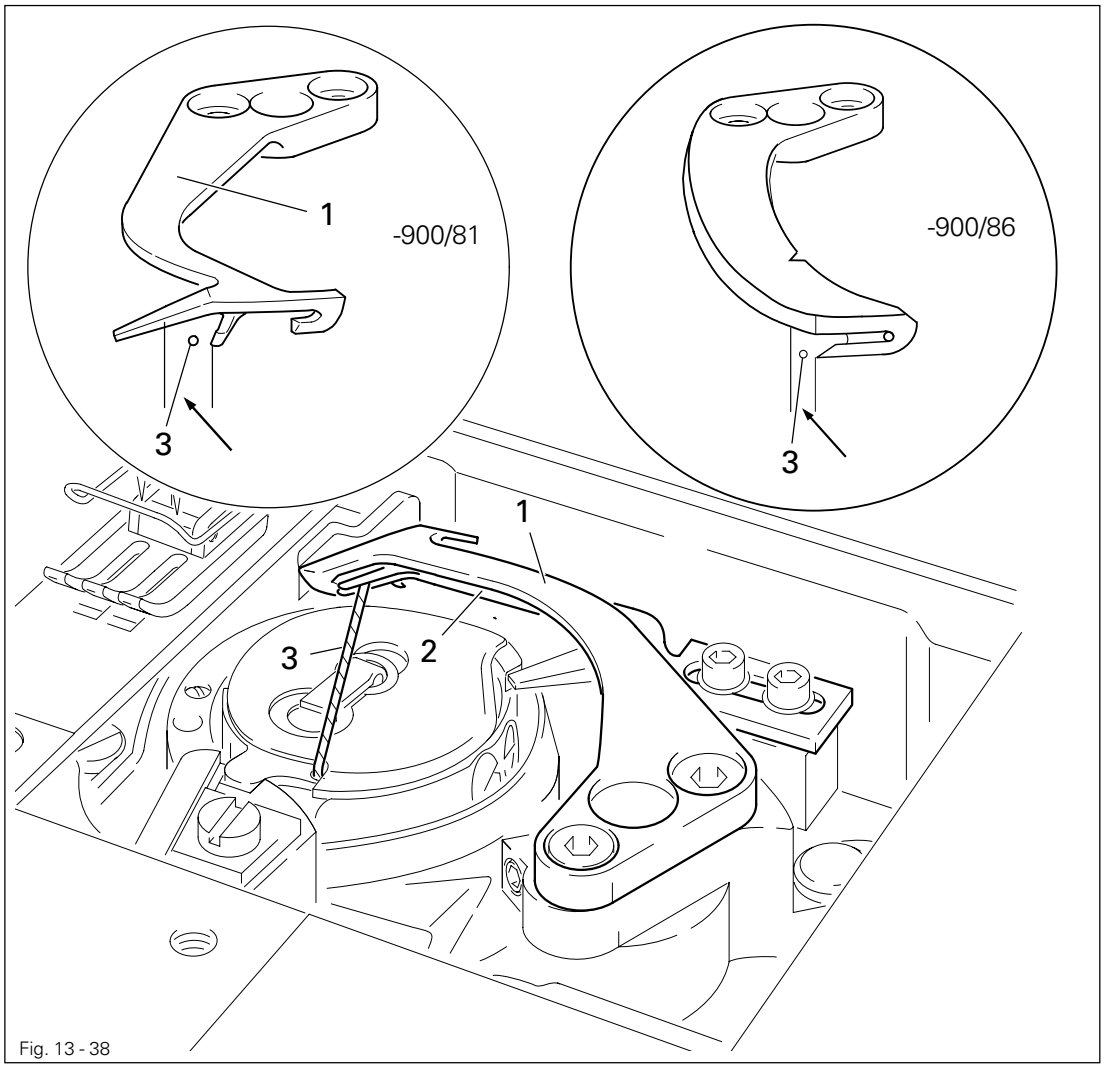

Fig. 13 - 38

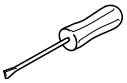

- Sew a few stitches.
- Turn off the on/off switch.
- Carry out cutting test manually.
- Check **Requirement 1** and readjust thread catcher **1** according to **Chapter 13.07.02 Thread-catcher height** if necessary.
- Check **Requirement 2** and readjust thread catcher **1** according to **Chapter 13.07.03 Thread-catcher position** if necessary.
- Check **Requirement 3** and readjust bobb-thread retaining spring **2** according to **Chapter 13.07.06 Bobbin-thread retaining spring** if necessary.

13.08 Adjusting the thread trimmer -900/82

13.08.01 Resting position of the roller lever/Preliminary adjustment of the radial position of the control cam

Requirement

1. When the cylinder plunger **1** is retracted, there must be a clearance of **0.1 mm** between the outer edge of control cam **6** and the roller of lever **5**.
2. When the take-up lever is at TDC, the control cam **6** must have moved roller lever **5** to its cutting position.

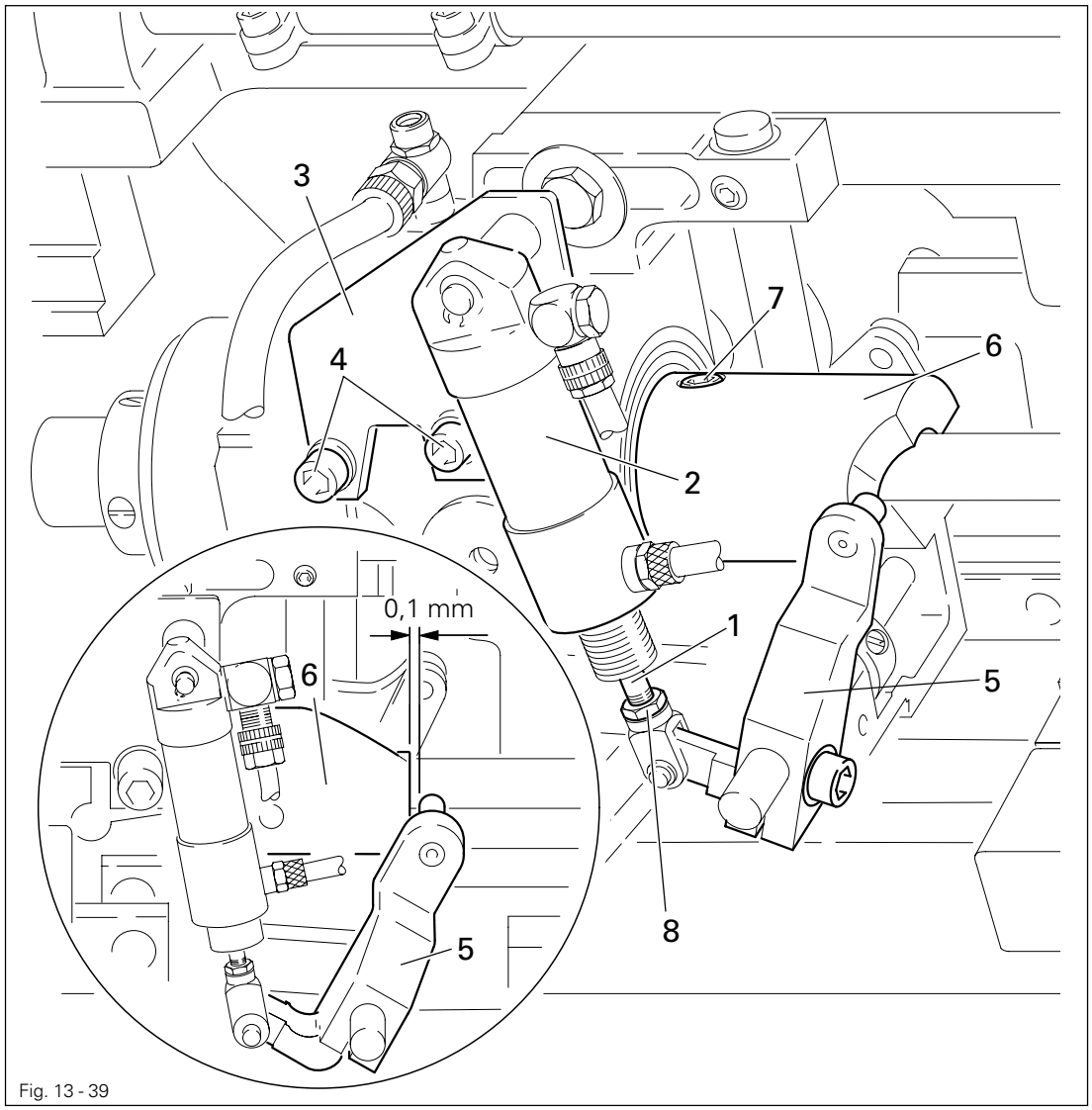

Fig. 13 - 39

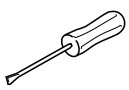

- Fully retract plunger **1** into cylinder **2**.
- Re-position cylinder mounting **3** (screws **4**) according to **Requirement 1**.
- Push roller lever **5** into control cam **6**.
- Set take-up lever at TDC.
- Turn control cam **6** (screws **7**) according to **Requirement 2**.



On cylinder plunger **1** about **1 mm** thread must protrude above locknut **8**.

13.08.02 Thread catcher and knife height

Requirement

1. There should be a clearance of **0.6 mm** between the lower edge of the thread catcher **1** and the bobbin case **2**.
2. When the thread trimmer is in its resting position the upper edges of knife **3** and thread catcher **1** should be at the same level.

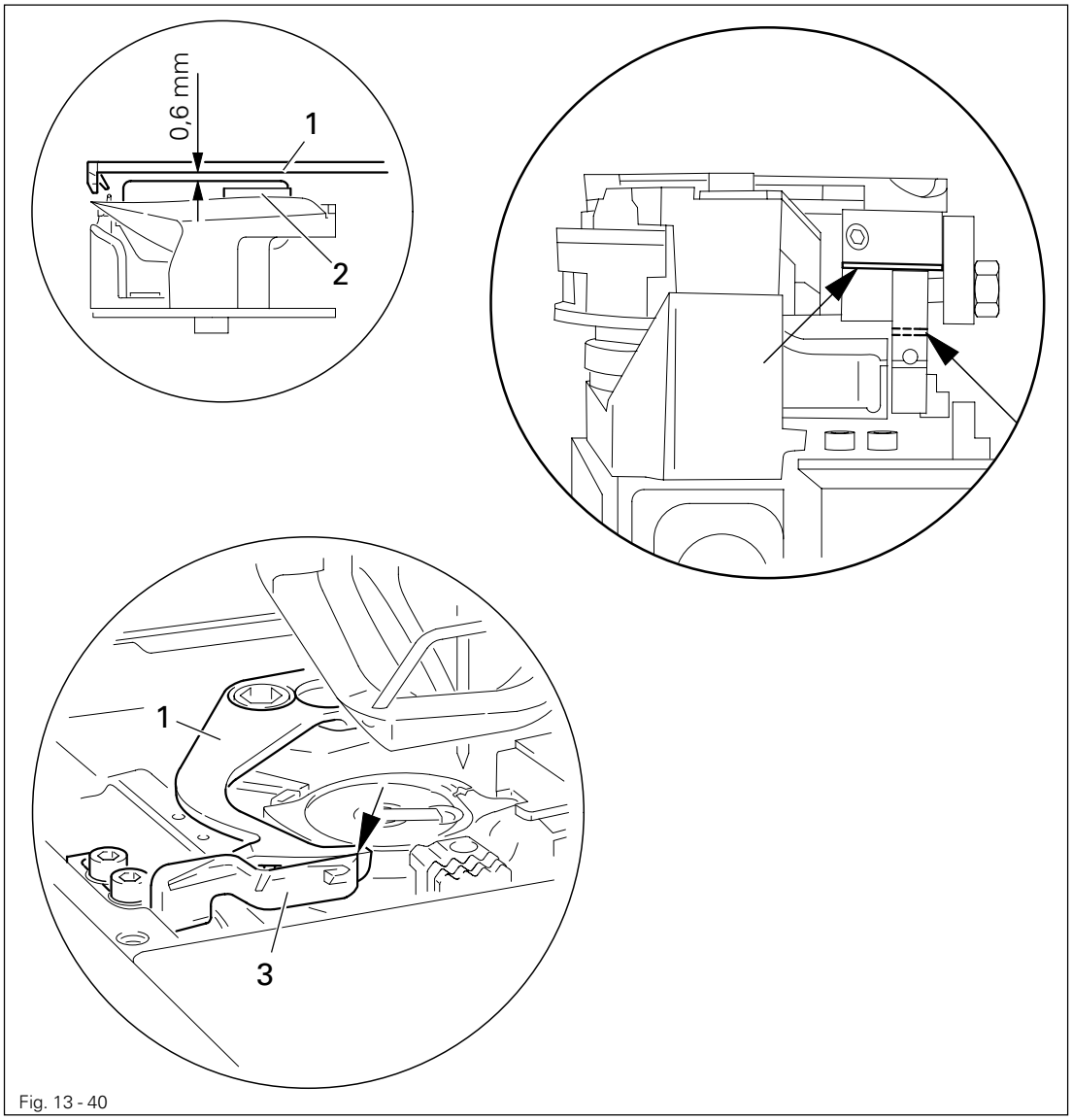

Fig. 13 - 40

The thread catcher and knife height is pre-set by the manufacturer and can only be corrected by placing washers under the thread catcher or knife mounting (see arrow).

13.08.03 Knife mounting support

Requirement
When the thread trimmer is in its cutting position, the knife mounting support **3** must be in contact with knife mounting **5**.

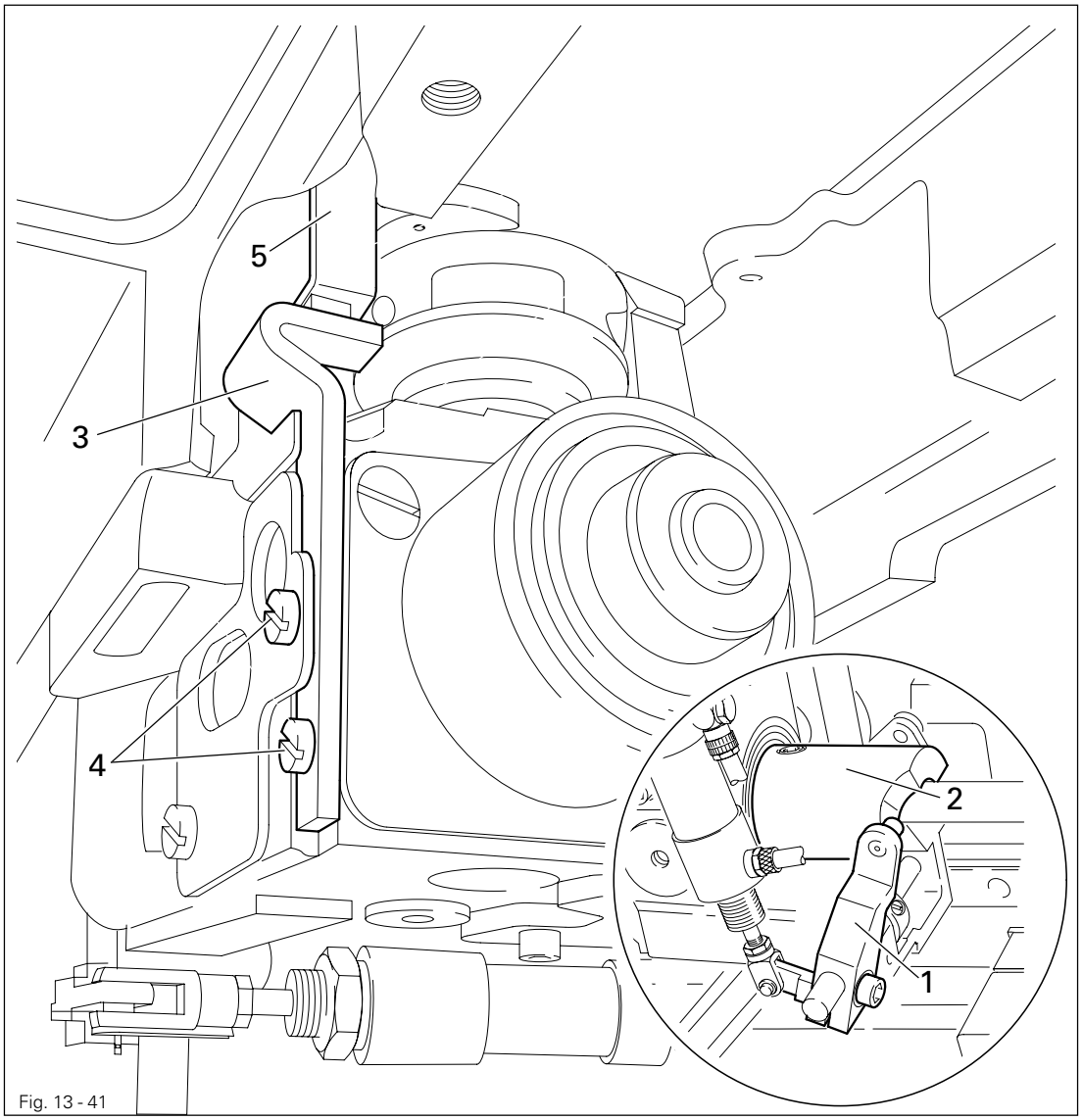

Fig. 13 - 41

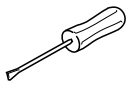

- Switch off master switch and turn off compressed air.
- Bring needle to BDC and press roller lever **1** against control cam **2**.
- Bring machine into cutting position.
- Adjust knife mounting support **3** (screws **4**) on the rear side of the hook bearing according to the **requirement**.

13.08.04 Knife cutting position

Requirement
When the knife is in its cutting position, there shold be a clearance of **35 mm** between the front edge of the knife and the front edge of the position stop **3**.

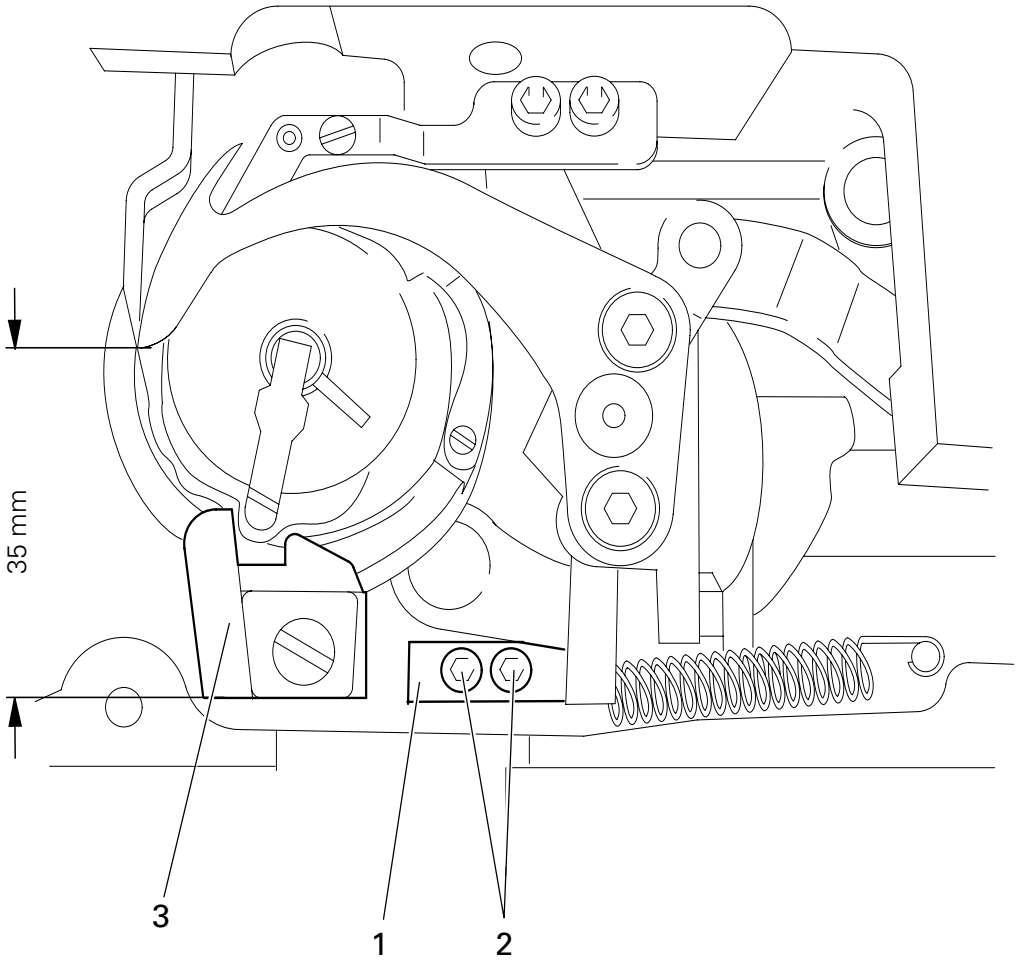

Fig. 13 - 42

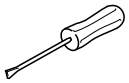

- Adjust position stop **1** (screws **2**) according to the **requirement**.

13.08.05 Thread catcher position

Requirement

1. When the thread trimmer is in its cutting position, the edges of the thread catcher **4** and knife **8** must be flush (see arrow).
2. In this position screw **1** must be touching the knife mounting support (see arrow).

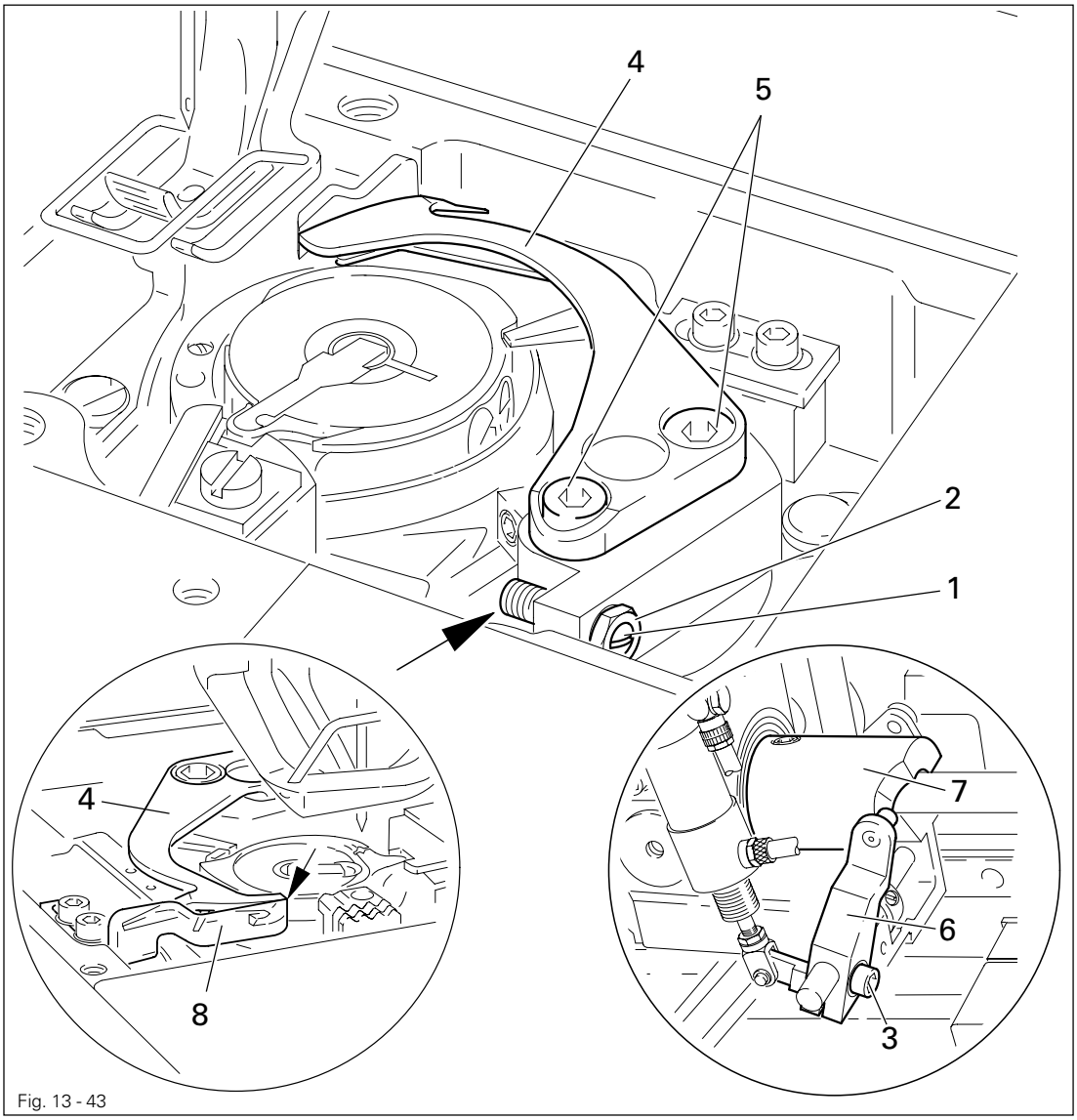

Fig. 13 - 43

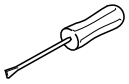

- Turn screw **1** (nut **2**) about three turns.
- Loosen screw **3**.
- Bring thread catcher **4** (screws **5**) to the middle of its adjustment range.
- Bring needle to BDC and press roller lever **6** against control cam **7**.
- Bring machine into cutting position.
- Turn thread catcher **4** according to **requirement 1**.
- Tighten roller lever **6** until it is resting against control cam **7** and tighten screw **3**.
- Adjust screw **1** (nut **2**) according to **requirement 2**.

13.08.06 Readjustment of the control cam

Requirement
When the take-up lever is at TDC, the cutting process should just have ended.

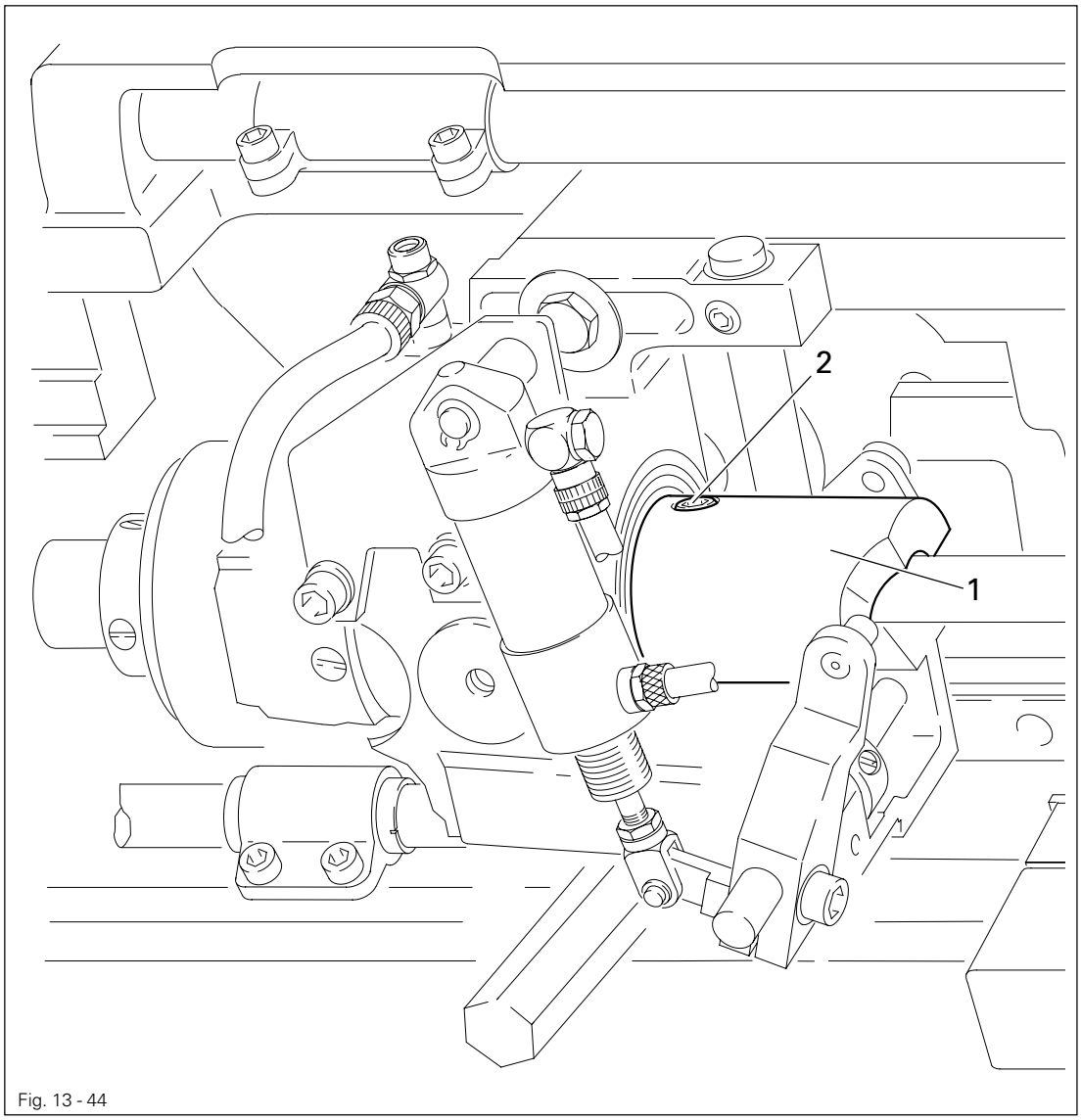

Fig. 13 - 44

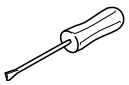

- Adjust control cam **1** (screws **2**) according to the requirement.

13.08.07 Knife pressure

Requirement
When the front edge of thread catcher **3** has passed the cutting edge by half, the cutting edge of the knife **4** must rest with light pressure on the edge of the catcher.

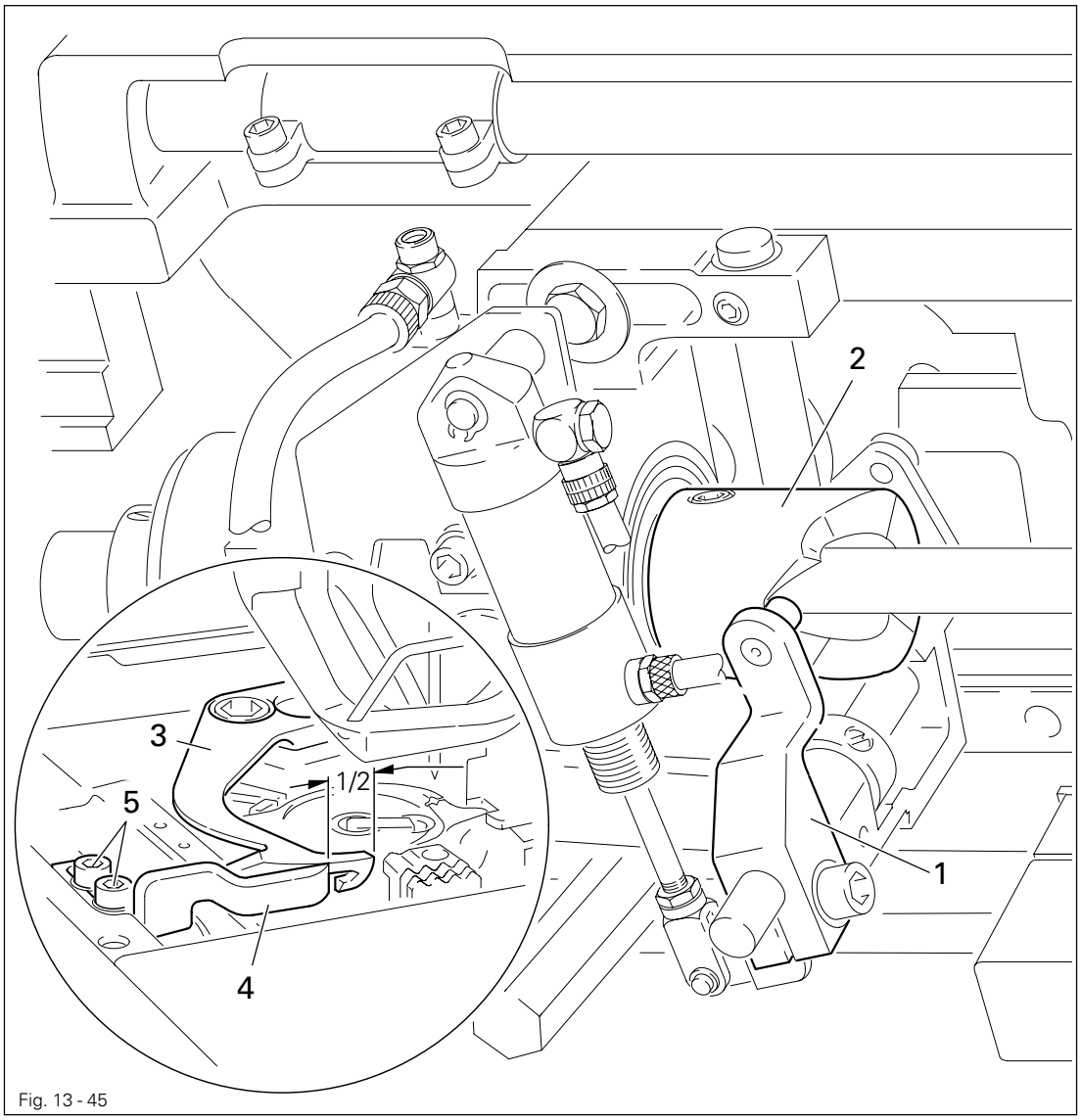

Fig. 13 - 45

- Set take-up lever at BDC and push roller lever **1** into control cam **2**.
- Turn balance wheel until front edge of thread catcher **3** has passed the cutting edge of the knife **4** by half.
- Re-position knife **4** (screws **5**) according to the **requirement**.

The knife pressure must be kept as low as possible, so that the position of the knife does not change during cutting.

13.08.08 Bobbin-thread retaining spring

Requirement

The retaining spring **1** must

1. reliably retain the bobbin thread after cutting and
2. neither hinder the thread return nor the removal and replacement of the bobbin case.

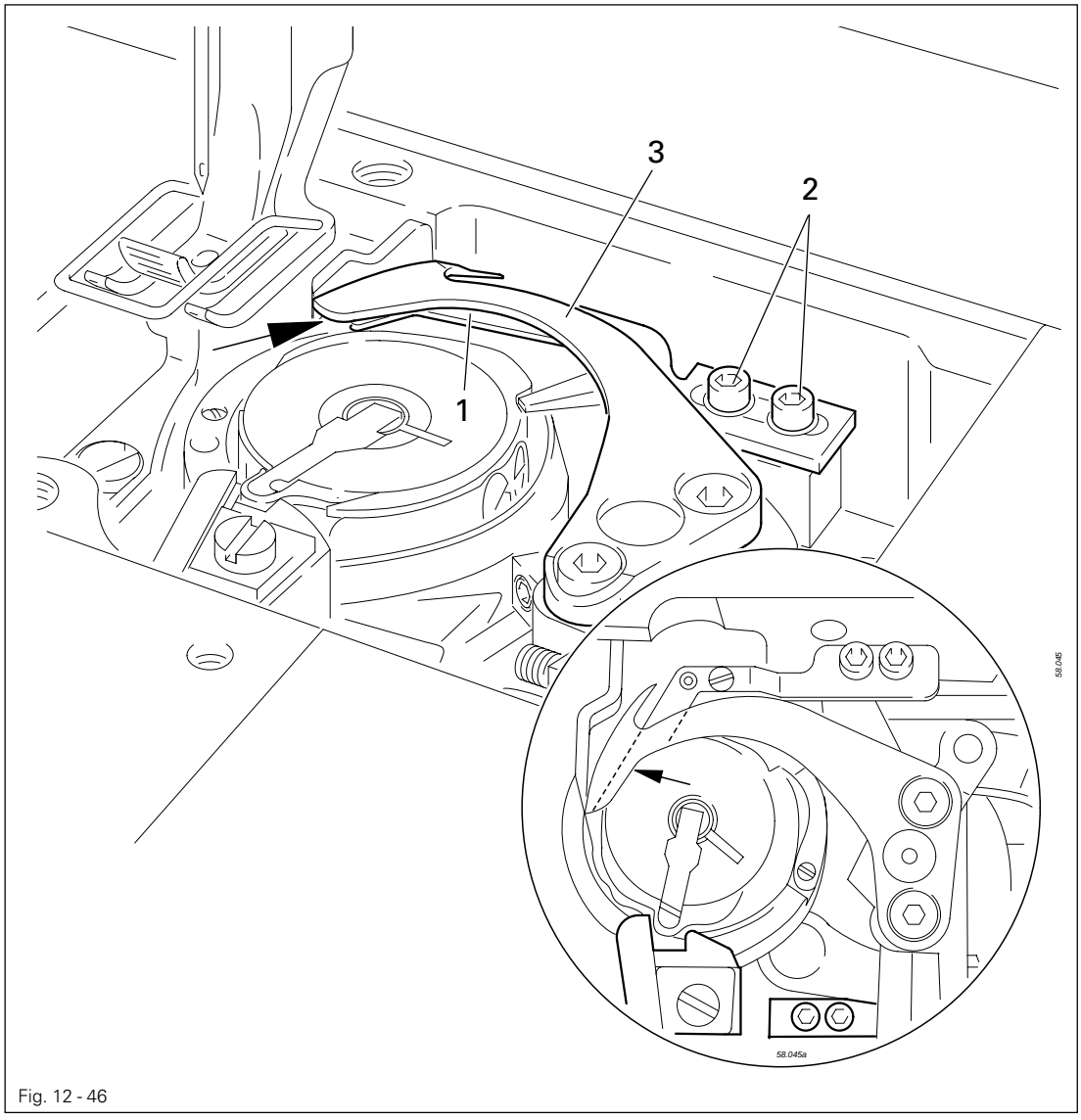

Fig. 12 - 46

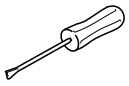

- Set thread trimmer at its resting position.
- Adjust retaining spring **1** (screws **2**) so that the interior edge of the retaining spring is flush with the thread catcher **3** and as close as possible to the front edge of the thread catcher (see arrow).
- By bending retaining spring **1**, adjust its height, so that the retaining spring **1** touches the bottom side of the thread catcher **3** (see arrow).

13.08.09 Manual cutting test

Requirement

1. When thread catcher **1** is on its forward stroke, it must not carry bobbin thread **3** forward too.
2. When thread catcher **1** is in its front position, the bobbin thread **3** must be positioned in the middle of the marked area (see arrow).
3. After the trimming action, both needle and bobbin thread must be perfectly cut, and bobbin thread **3** retained.

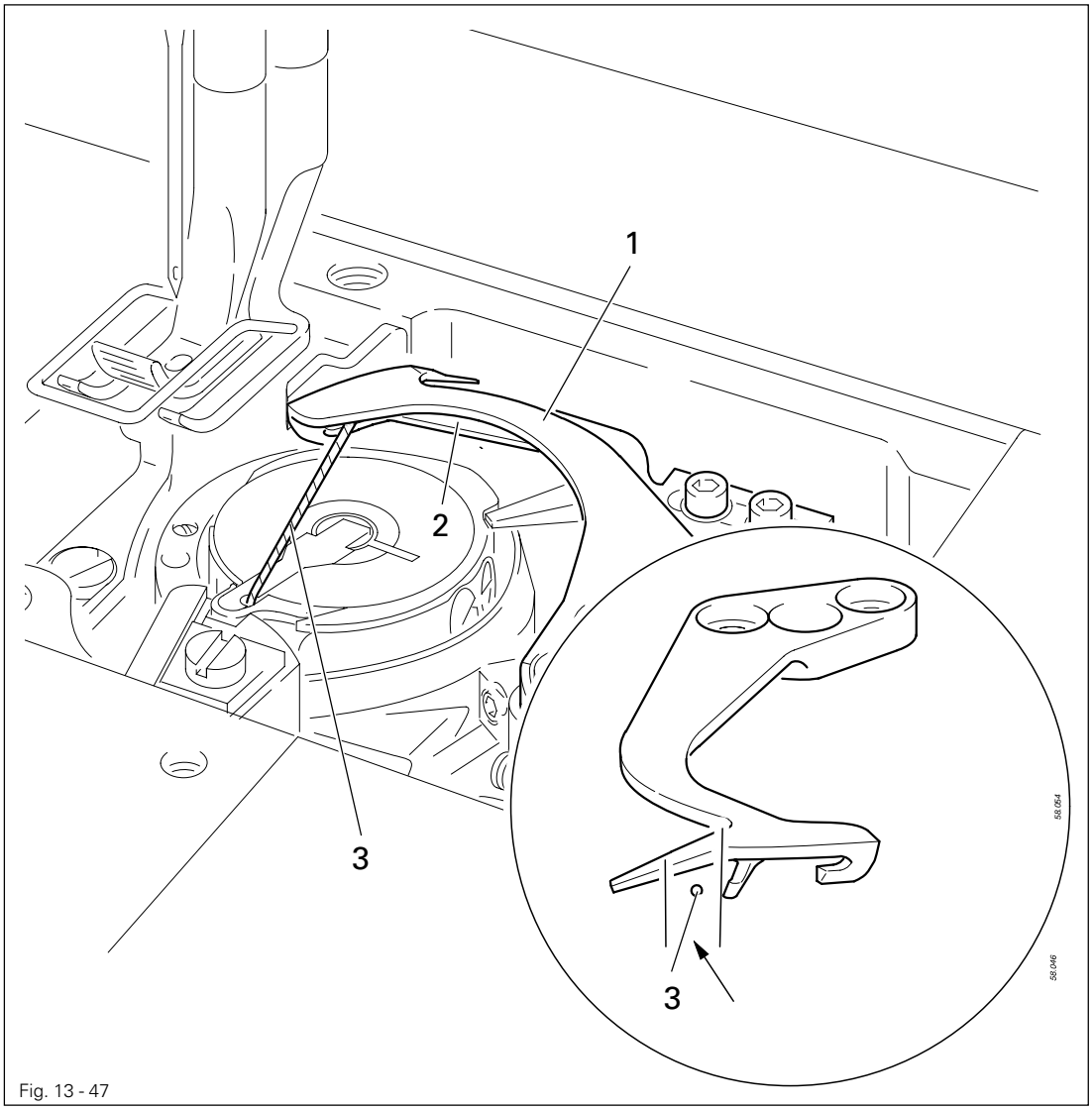

Fig. 13 - 47

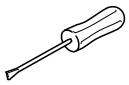

- Sew a few stitches.
- Turn off the master switch and the compressed air.
- Carry out cutting test manually.
- Check **requirement 1** and readjust thread catcher **1** according to **Chapter 13.08.02 Thread catcher height** if necessary.
- Check **requirement 2** and readjust thread catcher **1** according to **Chapter 13.08.05 Thread catcher position** if necessary.
- Check **requirement 3** and readjust bobbin thread retaining spring **2** according to **Chapter 13.08.08 Bobbin thread retaining spring** if necessary.

13.09 Adjusting the bobbin-thread supply monitor -926/06

(On the **PFAFF 1526** carry out this adjustment on both hooks)

Requirement
When the reflection surface is positioned at the transmitting and receiving unit, the luminous diode on the amplifier must light up and the highest possible voltage applied.

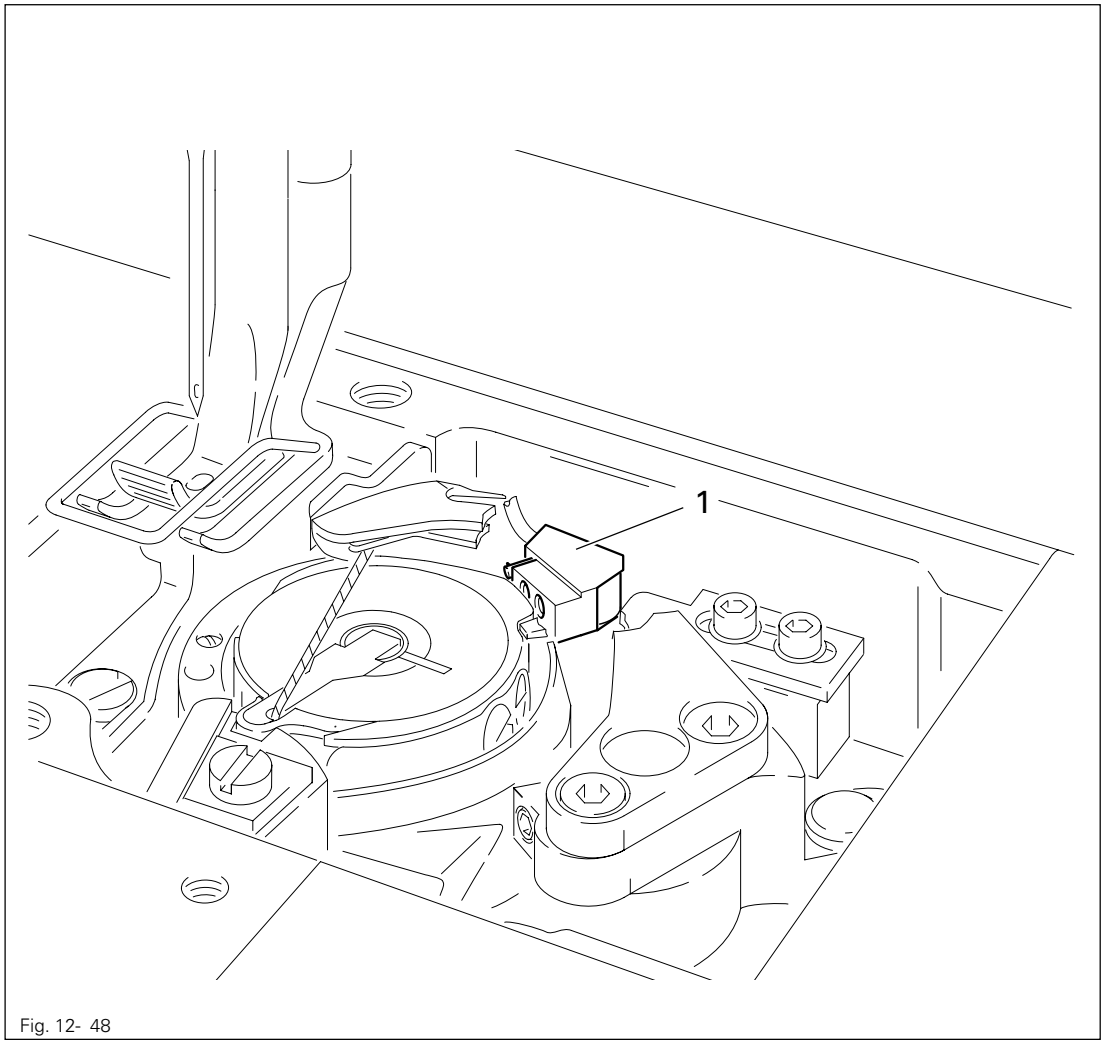

Fig. 12- 48

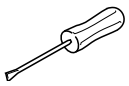

- Wind thread onto bobbin core without covering the bobbin reflection surfaces.
- Insert bobbin in hook.
- Connect amplifier on control box.
- Turn rotary potentiometer on regulator amplifier, part No. 71-8500-0091 to set highest voltage (P_{max}).
- Connect multiple tester (measuring range DC 6.5 V) to measuring sockets of amplifier. Switch on tester.
- To position the bobbin reflection surface at transmitting and receiving unit **1**, pull the bobbin thread slowly until luminous diode on amplifier lights up.
- Position transmitting and receiving unit **1** by bending it so that the voltage reading is at its highest.
- If the voltage rises above **6.5 V**, reduce it to **3 V** and repeat this procedure until the highest possible voltage is obtained.

13.05 Parameter settings

(only on machines with Quick-EcoDrive and control unit P70ED or Quick-PicoDrive and control unit P41 PD-L)

- The selection of the user level and the alteration of parameters is described in the separate instruction manual for the drive unit.

13.05.01 Parameter list

Group	Parameter	Description	User lever	Setting range	Set value P70 ED	Set value P41 PD-L
6	607	Speed max.	B, C	300 - 6000	▲	▲
	660	Bobbin monitor function 0 = 0ff I = by sensor (-926/06) II = by stitch counting	B, C	0 -II	0	-
7	700	Needle position 0, Needle reference position	B, C	0 - 255		
	702	Needle position 1 (needle lowered) on the1525 and 1526 on the1526-G	 B, C B, C	 0 - 255 0 - 255	 80 25	 85
	703	Needle position 2 (take-up lever raised) on the -900/81 on the -900/82 on the1525-G-900/86	 B, C B, C B, C	 0 - 255 0 - 255 0 - 255	 213 225 230	 234
	705	Needle position 5 (end cutting signal 1) on the -900/81and -900/86 on the -900/82	 B, C B, C	 0 - 255 0 - 255	 175 225	 186
	707	Needle position 6 (Start tension release signal 2) on the1525 and 1526 on the1525-G	 B, C B, C	 0 - 255 0 - 255	 180 200	 192
	727	Counter for bobbin monitoring brings ON= stop and signal at output Y36 OFF = signal at output Y36 without stop	B, C	ON - OFF	0	-
	760	Multiplier for the fixed value (200) for stitch count	A, B, C	0 - 250	10	-

▲ See Chapter 3 Specifications

Group	Parameter	Description	User lever	Setting range	Set value P70 ED	Set value P41 PD-L
7	799	Selected machine class	C	1 - 4	3	-
			C	1 - 5	-	5
8	800	Rotating direction of the motor	C	0 - 1	1	1
9	989	Thread trapper at beginning of seam 0 = OFF I = ON II = ON and raise presser foot	C	0 - 2	0	0



Further parameters and the description for an internet update of the machine software and reset /cold start of the machine can be found in the instruction manual for the control panel.

14.01 Circuit diagrams (with EcoDrive and control unit P 70 EDx)

Reference list for the Circuit diagrams

A1	Control unit P70 ED
A2	Control panel S3
A14	Sewing head recognition system (OTE)
H1	Sewing lamp
H8	-926/07 LED stitch counting
M1	Sewing motor
Q1	Main switch
S1.1	Pedal speed control unit
S1	Key 1 other function depending on parameter
S2	Key 2 other function depending on parameter
S3	Key 3 other function depending on parameter
S4	Key 4 other function depending on parameter
S5	Key 5 other function depending on parameter
S6	Key 6 other function depending on parameter
S7	Key 7 other function depending on parameter
S13	Speed 1
S15	Speed 2
S17	Knee switch lift adjustment
V1	LED 1 (2) other function depending on parameter
V2	LED 2 (3) other function depending on parameter
V3	LED 3 (4) other function depending on parameter
V4	LED 4 (5) other function depending on parameter
V5	LED 5 (6) other function depending on parameter
V6	LED 6 (7) other function depending on parameter
V7	LED 7 (1) other function depending on parameter
X0	PC-interface (RS 232)
X1	Sewing motor
X1B	A14 Sewing head recognition
X2	Incremental transducer
X2.1	Incremental transducer
X2.2	Synchronizer PD 3
X2B	S3 control panel
X3	Speed control unit
X7	Light barrier plug (optional))

X11	Bobbin thread monitor (optional)
X12	Plug key row
X13	Output-input plug 1
X14	Output-input plug 2
XH8	-926/07 reverse stitch counting
XY2	-900/.. thread trimmer
XY2.1	-900/82 short thread trimmer
XY3	-909/.. thread wiper
XY4	-910/.. automatic foot lift
XY5	-911/.. backtacking device
XY6	-918/.. lift adjustment or -720/.. right needle
XY9	-918/.. second top stitch length or -720/.. left needle
XY10	Thread tension release
XY12	-918/.. second bottom stitch length
XY13	-748/.. lift puller
XY14	Thread tension switchover (optional)
XY15	-748/.. lift puller on automatic foot lift and backtacking device
XY37	Oil valve open while machine running
XY38	Clean hook X11 bobbin thread monitor (optional)

Y2	-900/.. thread trimmer
Y2.1	-900/82 thread trimmer
Y3	-909/.. thread wiper
Y4	-910/.. automatic foot lift
Y5	-911/.. backtacking device
Y6	-918/.. lift adjustment or -720/.. right needle
Y9	-918/.. second top stitch length or -720/.. left needle
Y10	Thread tension release
Y12	-918/.. second bottom stitch length
Y13	-748/.. lift puller
Y14	Zero stitch - cut (optional)
Y15	-748/.. lift puller on automatic foot lift and backtacking device
Y37	Oil valve open while machine running
Y38	Clean hook X11 bobbin thread monitor (optional)

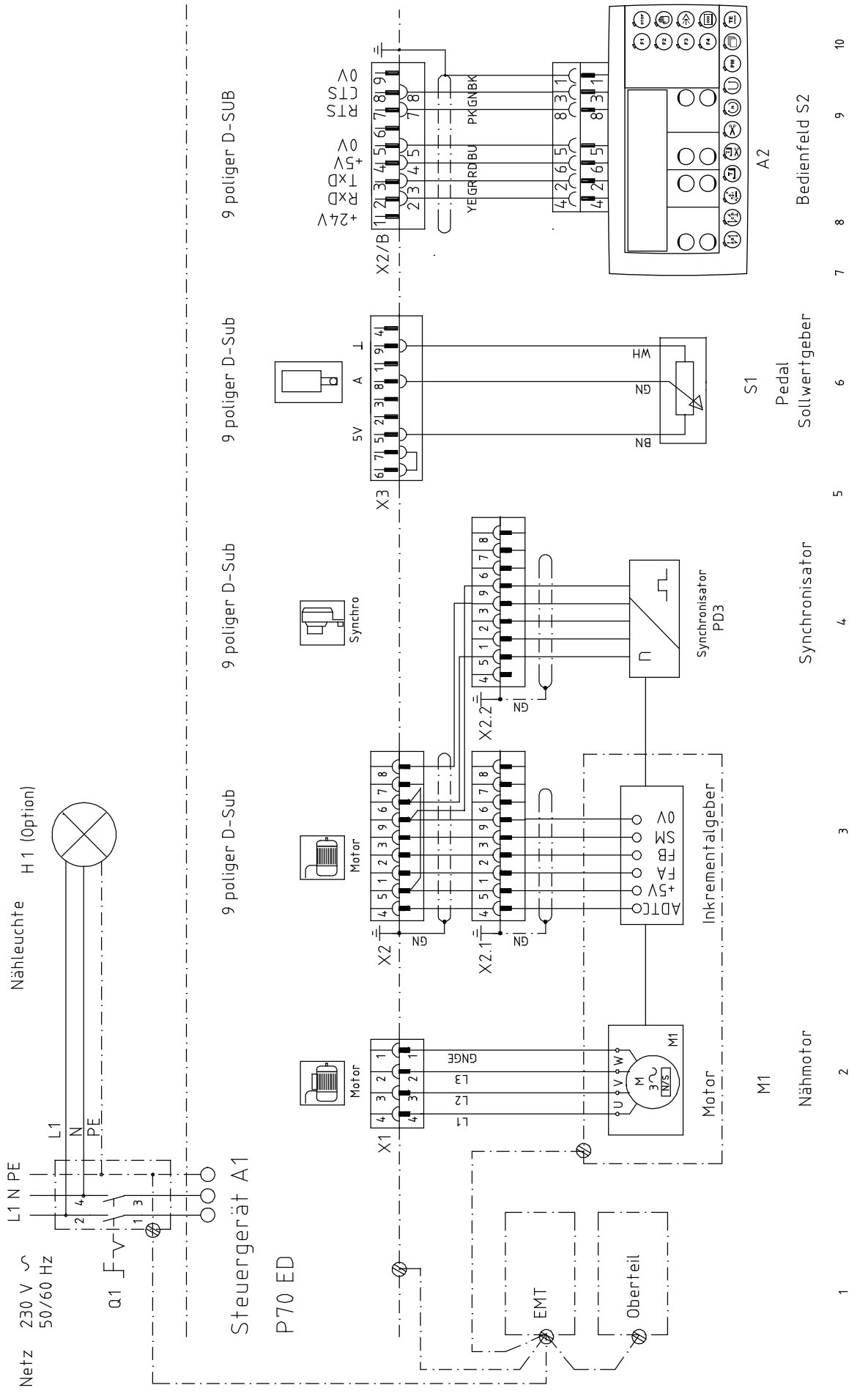
Netz 230 V ~ 50/60 Hz
L1 N PE
Q1
Steuergerät A1
P70 ED
Nähleuchte H 1 (Option)
9 poliger D-SUB
9 poliger D-Sub
X1
X2
X2.1
X2.2
X2/B
X3
Motor
Synchro
EMT
Oberteil
Synchronisator PD3
Inkrementalgeber
A2
Bedienfeld S2
S1
Pedal
Sollwertgeber
M1
Nähmotor
Synchronisator

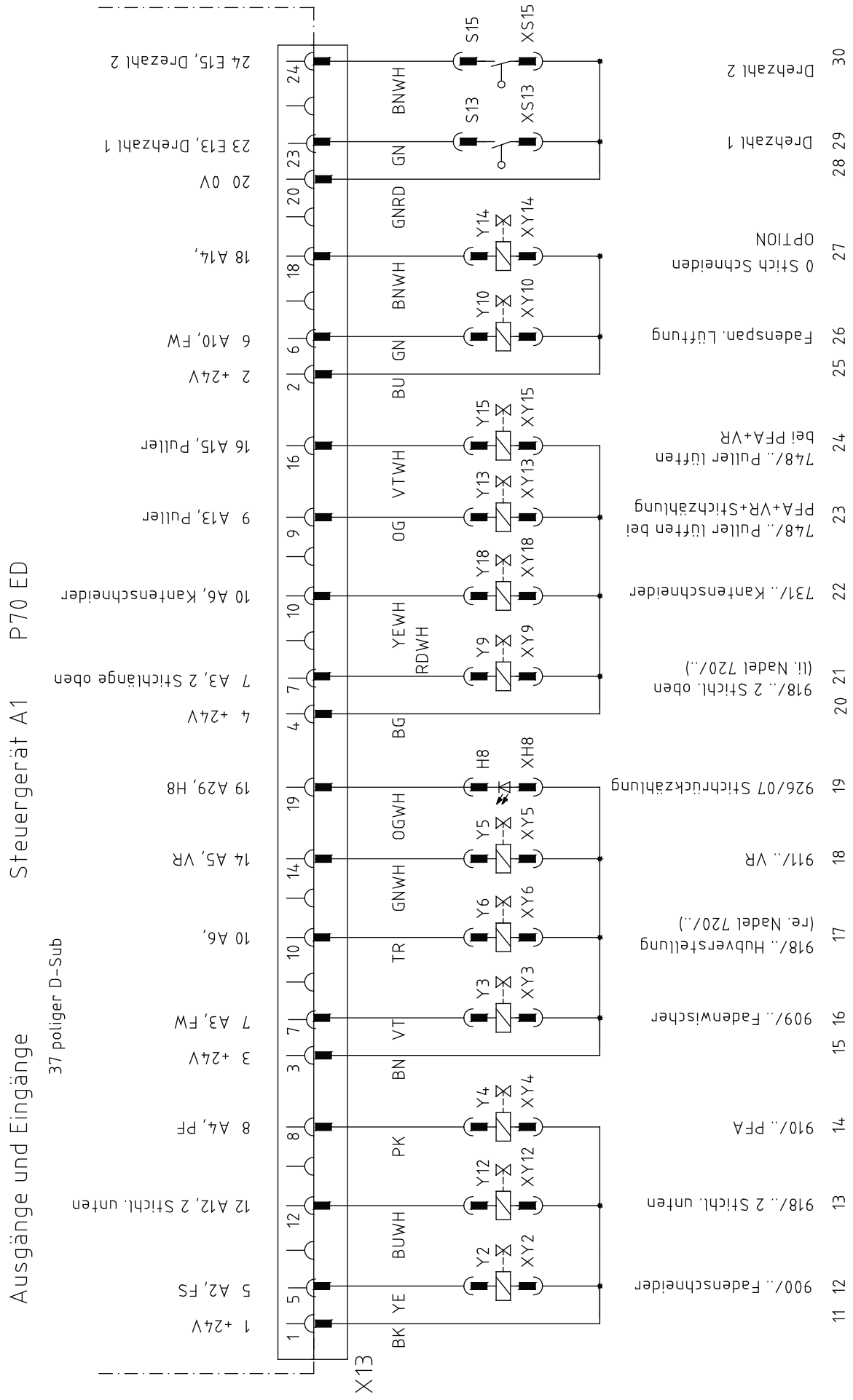
Ausgänge und Eingänge
Steuergerät A1
P70 ED
37 poliger D-Sub
X13
1 +24V
5 A2, FS
12 A12, 2 Stichl. unten
8 A4, PF
3 +24V
7 A3, FW
10 A6,
14 A5, VR
19 A29, H8
4 +24V
7 A3, 2 Stichlänge oben
10 A6, Kantenschneider
9 A13, Puller
16 A15, Puller
2 +24V
6 A10, FW
18 A14,
20 0V
23 E13, Drehzahl 1
24 E15, Drezahl 2
BK YE BUWH PK BN VT TR GNWH OGWH BG YEWH RDWH OG VTWH BU GN BNWH GNRD GN BNWH
S15 S13 XS15 XS13
Drehzahl 2
Drehzahl 1
0 Stich Schneiden OPTION
Fadenspan. Lüftung
748/.. Puller lüften bei PFA+VR
748/.. Puller lüften bei PFA+VR+Stichzählung
731/.. Kantenschneider
918/.. 2 Stichl. oben (li. Nadel 720/..)
926/07 Stichrückzählung
911/.. VR
918/.. Hubverstellung (re. Nadel 720/..)
909/.. Fadenwischer
910/.. PFA
918/.. 2 Stichl. unten
900/.. Fadenschneider

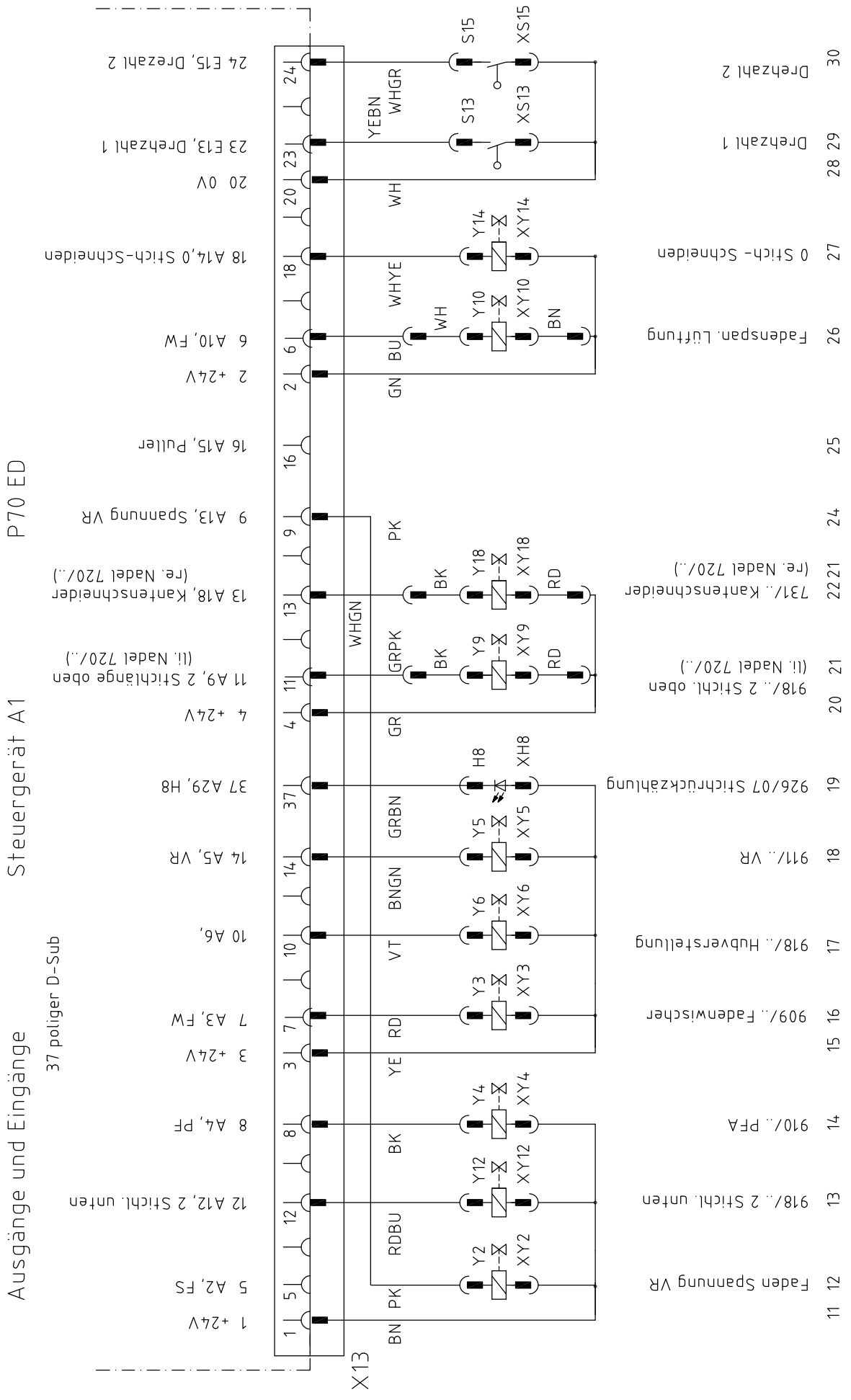
Ausgänge und Eingänge
Steuergerät A1
P70 ED
37 poliger D-Sub
1 +24V
5 A2, FS
12 A12, 2 Stichl. unten
8 A4, PF
3 +24V
7 A3, FW
10 A6,
14 A5, VR
37 A29, H8
4 +24V
11 A9, 2 Stichlänge oben (li. Nadel 720/..)
13 A18, Kantenschneider (re. Nadel 720/..)
9 A13, Spannung VR
16 A15, Puller
2 +24V
6 A10, FW
18 A14,0 Stich-Schneiden
20 0V
23 E13, Drehzahl 1
24 E15, Drezahl 2
X13
BN
PK
RDBU
BK
YE
RD
VT
BNGN
GRBN
GR
GRPK
WHGN
GN
BU
WH
WHYE
YEBN
WHGR
Y2
XY2
Y12
XY12
Y4
XY4
Y3
XY3
Y6
XY6
Y5
XY5
H8
XH8
Y9
XY9
Y18
XY18
Y10
XY10
Y14
XY14
S13
XS13
S15
XS15
Faden Spannung VR
918/.. 2 Stichl. unten
910/.. PFA
909/.. Fadenwischer
918/.. Hubverstellung
911/.. VR
926/07 Stichrückzählung
918/.. 2 Stichl. oben (li. Nadel 720/..)
731/.. Kantenschneider (re. Nadel 720/..)
Fadenspan. Lüftung
0 Stich- Schneiden
Drehzahl 1
Drehzahl 2
11 12 13 14 15 16 17 18 19 20 21 22 21 24 25 26 27 28 29 30

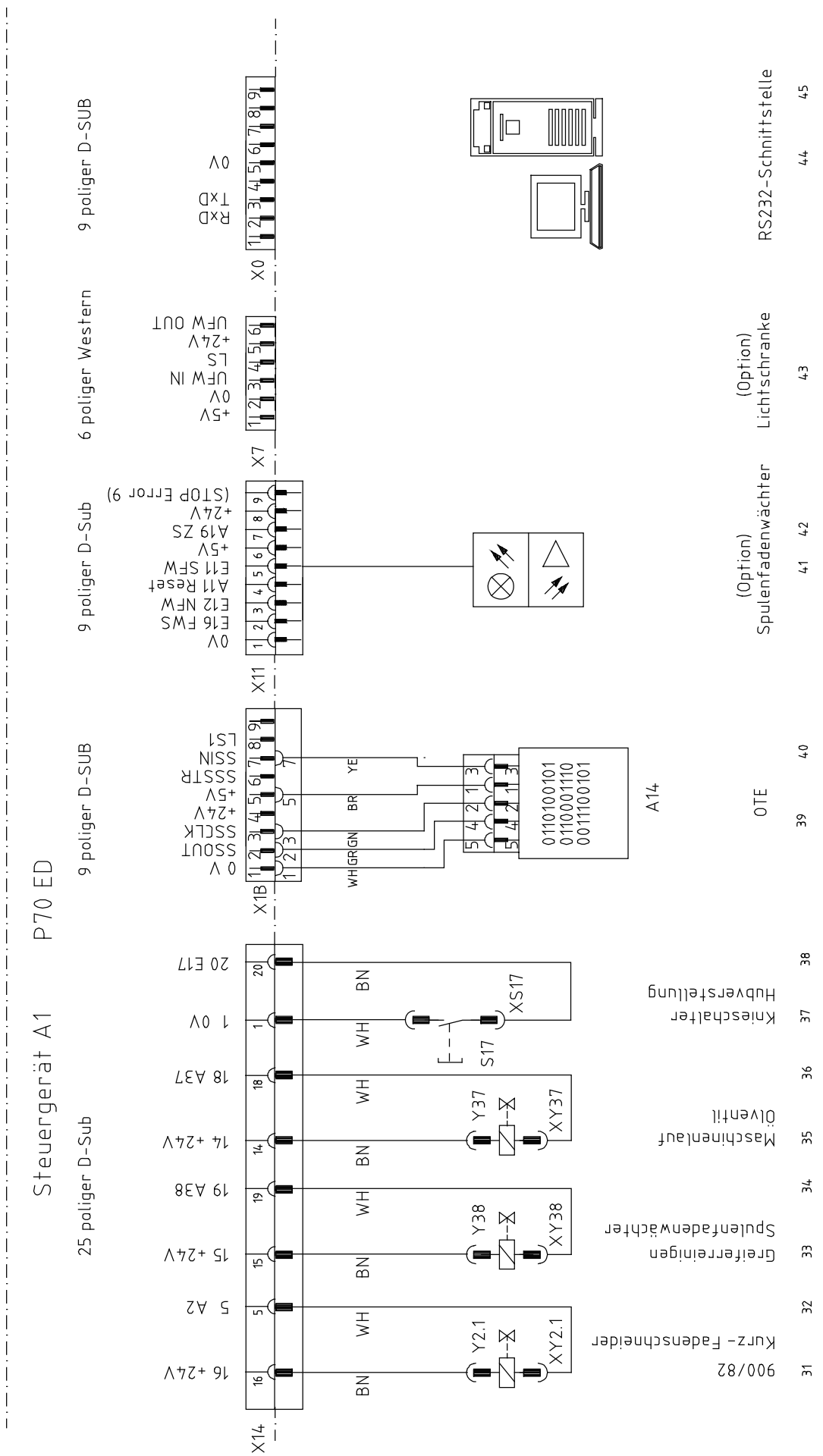
Steuergerät A1 P70 ED
25 poliger D-Sub
9 poliger D-SUB
6 poliger Western
9 poliger D-SUB
9 poliger D-Sub
X14
X1B
X11
X7
X0
16 +24V
5 A2
15 +24V
19 A38
14 +24V
18 A37
1 0V
20 E17
0 V
SSOUT
SSCLK
+24V
+5V
SSSTR
SSIN
LS1
0V
E16 FWS
E12 NFW
A11 Reset
E11 SFW
+5V
A19 ZS
+24V
(STOP Error 9)
+5V
0V
UFW IN
LS
+24V
UFW OUT
RxD
TxD
0V
Y2.1
XY2.1
Y38
XY38
Y37
XY37
S17
XS17
BN
WH
GN
BR
YE
0110100101
0110001110
0011100101
A14
OTE
900/82
Kurz- Fadenschneider
Greiferreinigen
Spulenfadenwächter
Maschinenlauf
Ölventil
Knieschalter
Hubverstellung
(Option)
Spulenfadenwächter
(Option)
Lichtschranke
RS232-Schnittstelle
31
32
33
34
35
36
37
38
39
40
41
42
43
44
45

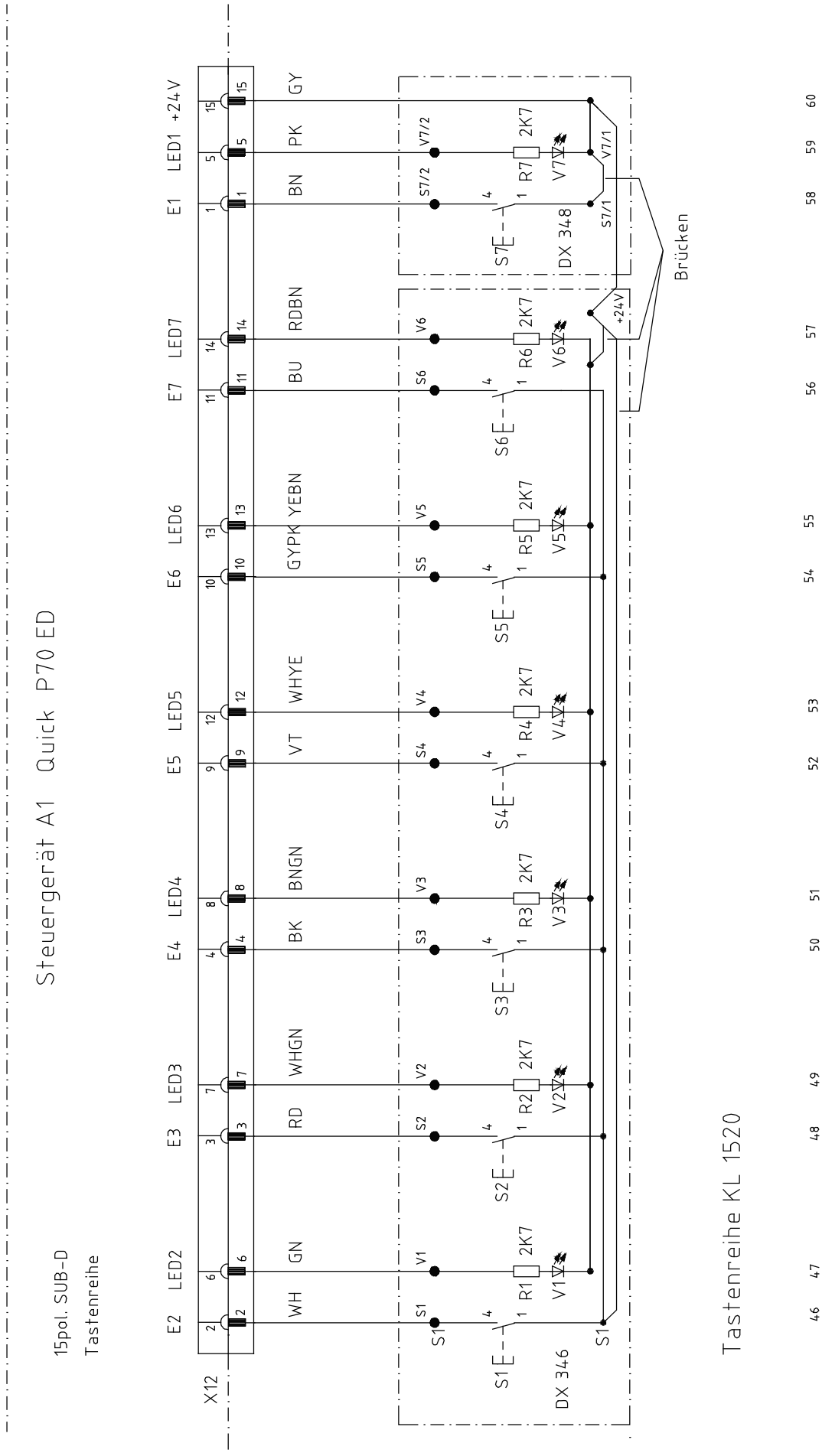
Steuergerät A1 Quick P70 ED
15pol. SUB-D
Tastenreihe
X12
E2 LED2 WH GN
E3 LED3 RD WHGN
E4 LED4 BK BNGN
E5 LED5 VT WHYE
E6 LED6 GYPK YEBN
E7 LED7 BU RDBN
E1 LED1 +24V BN PK GY
S1 S2 S3 S4 S5 S6 S7
R1 R2 R3 R4 R5 R6 R7 2K7
V1 V2 V3 V4 V5 V6 V7
S7/2 S7/1 V7/2 V7/1
DX 346
DX 348
+24V
Brücken
Tastenreihe KL 1520

14.02 Block diagram PFAFF 1525 S with control unit P41 PD-L

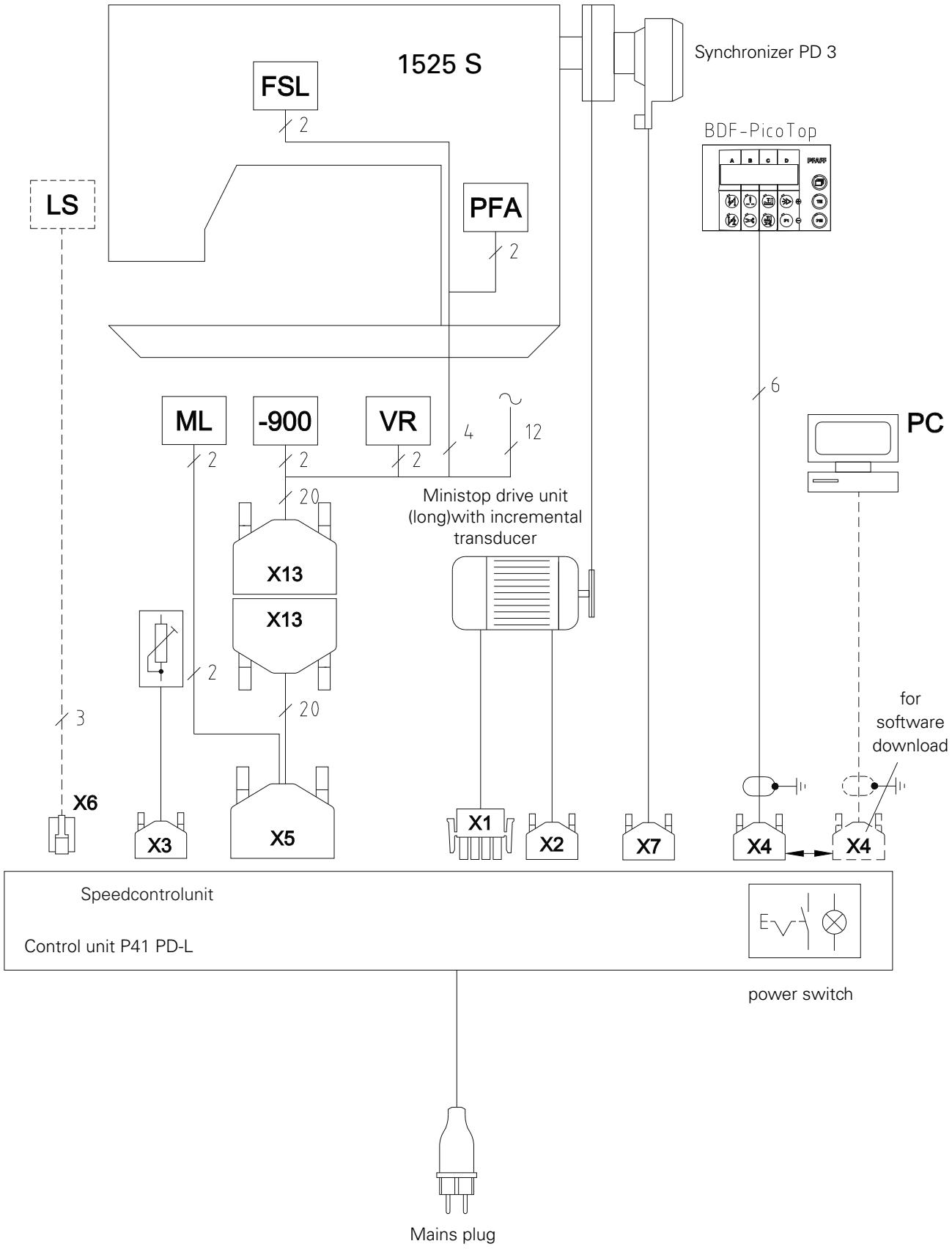

14.03 Circuit diagrams (with PiccoDrive and control unit P41 PD-L)

Reference list for the Circuit diagrams 91-191 518-95

A1	Control unit P41PD-L
A2	Control panel Pico-Top
HQ1	Main switch-lamp
M1	Sewing motor with incremental transmitter
Q1	Main switch
S1	Pedal speed control unit
X1	M1 Sewing motor
X2	M1 Incremental transducer
X3	S1 Speedcontrolunit
X4	A2 Control panel Pico-Top or PC-interface (RS 232)
X5	Output-input plug
X8	Light barrier plug (optional)
X9	Synchronizer PD 3
X13	Adapter lead plug
XY1	-910/.. automatic foot lift
XY2	-911/.. backtacking device
XY3	Lubrication hook (ML)
XY4	Thread tension release FSL
XY5	-900/.. thread trimmer
Y1	-910/.. automatic foot lift
Y2	-911/.. backtacking device
Y3	Lubrication hook (ML)
Y4	Thread tension release (FSL)
Y5	-900/.. thread trimmer

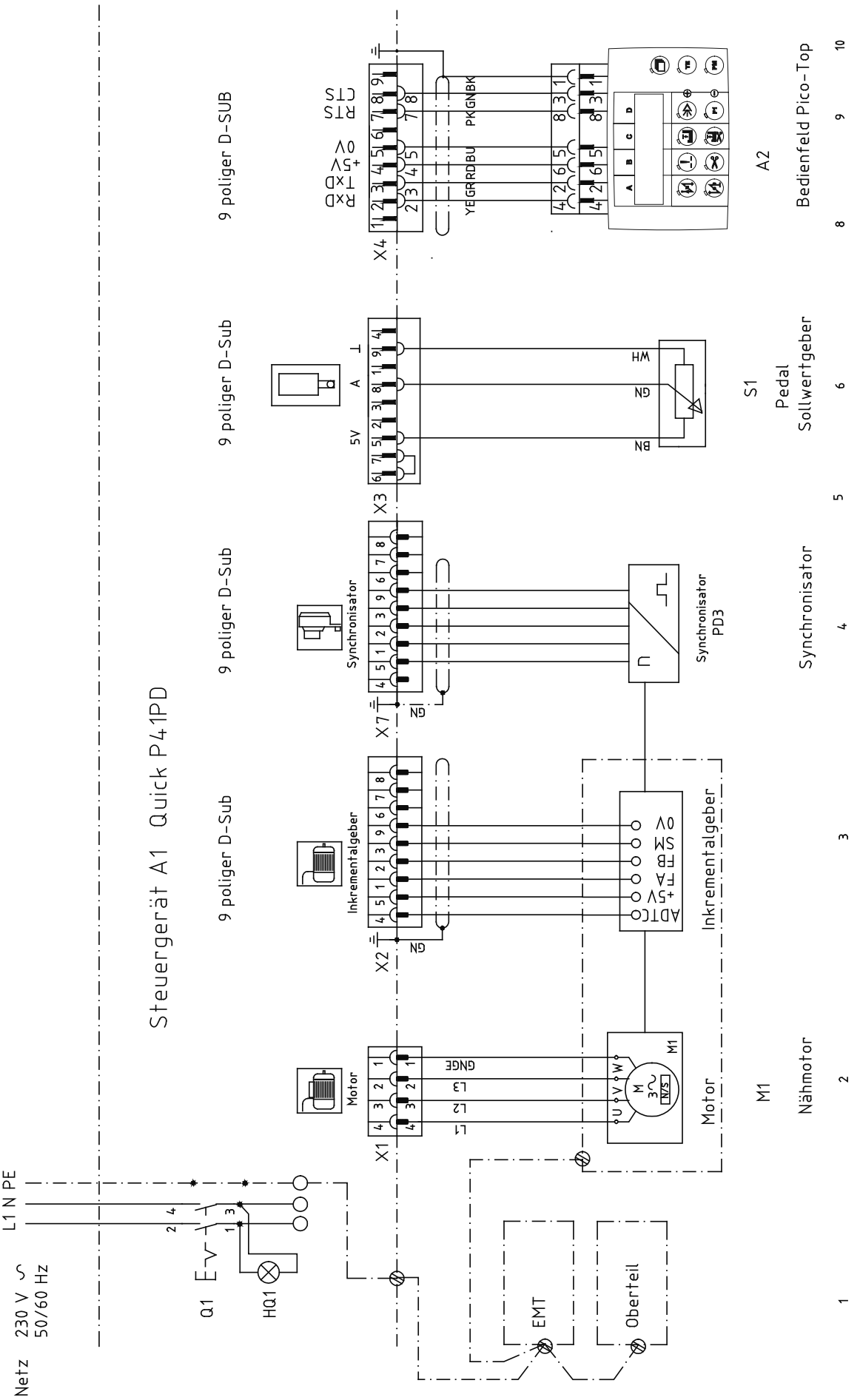
Steuergerät A1 Quick P41PD
Netz 230 V ∿ 50/60 Hz
L1 N PE
Q1
HQ1
EMT
Oberteil
X1
X2
X3
X4
X7
9 poliger D-SUB
Motor
Inkrementalgeber
Synchronisator
Synchronisator PD3
Bedienfeld Pico-Top
Pedal Sollwertgeber
Synchronisator
Inkrementalgeber
Motor
Nähmotor
A2
S1
M1
GNGE
L3
L2
L1
YE GR RD BU PK GN BK
WH
GN
BN
1
2
3
4
5
6
7
8
9
10

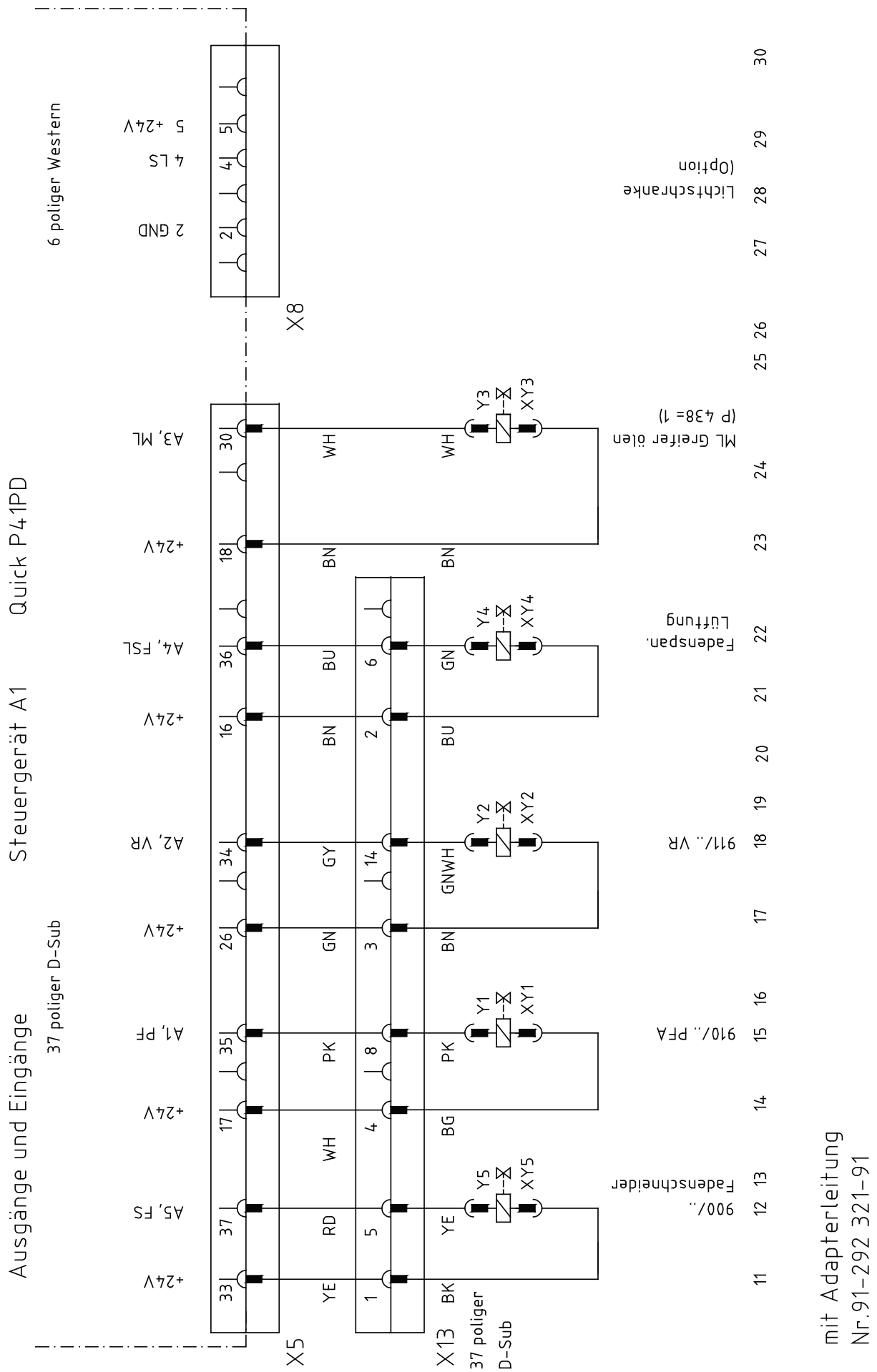
Steuergerät A1 Quick P41PD
Ausgänge und Eingänge
37 poliger D-Sub
X5
X13
37 poliger D-Sub
X8
6 poliger Western
2 GND
4 LS
5 +24V
A3, ML
A4, FSL
A2, VR
A1, PF
A5, FS
+24V
ML Greifer öffen (P 438= 1)
Fadenspan. Lüftung
911/.. VR
910/.. PFA
900/.. Fadenschneider
Lichtschranke (Option)
Y1
Y2
Y3
Y4
Y5
XY1
XY2
XY3
XY4
XY5
mit Adapterleitung Nr.91-292 321-91

PFAFF® Industrial



Europäische Union
Wachstum durch Innovation – EFRE



PFAFF Industriesysteme
und Maschinen AG

Hans-Geiger-Str. 12 - IG Nord
D-67661 Kaiserslautern

Phone: +49-6301 3205 - 0
Fax: +49-6301 3205 1386
E-mail: info@pfaff-industrial.com

Hotlines:

Technical service:	+49-175/2243-101
Application consultance:	+49-175/2243-102
Spare-parts hotline:	+49-175/2243-103

Printed in Germany

© PFAFF Industriesysteme und Maschinen AG 2009, PFAFF is the exclusive trademark of VSM Group AB.PFAFF Industriesysteme und Maschinen AG is an authorized licensee of the PFAFF trademark.