PFAFF® Industrial

1571
1574

INSTRUCTION MANUAL

1591

This instruction manual applies to machines from the following serial numbers onwards:
2 620 574 →

296-12-18 725/002
Betriebsanleitung engl. 06.09



This Instruction Manual is valid for all models and subclasses listed in the chapter "Specifications ".

The reprinting, copying or translation of PFAFF Instruction Manuals, whether in whole or in part, is only permitted with our previous authorization and with written reference to the source.

PFAFF Industriesysteme
und Maschinen AG

Hans-Geiger-Str. 12 - IG Nord
D-67661 Kaiserslautern

Contents ..... Chapter - Page

1	**Safety**	1 - 1
1.01	Directives	1 - 1
1.02	General notes on safety	1 - 1
1.03	Safety symbols	1 - 2
1.04	Important points for the user	1 - 2
1.05	Operating and specialist personnel	1 - 3
1.05.01	Operating personnel	1 - 3
1.05.02	Specialist personnel	1 - 3
1.06	Danger	1 - 4
2	**Proper use**	2 - 1
3	**Specifications**	3 - 1
3.01	PFAFF 1571, 1574, 1591	3 - 1
3.02	Needles and threads	3 - 2
3.03	Possible models and subclasses	3 - 2
4	**Disposal of Machine**	4 - 1
5	**Transportation, packing and storage**	5 - 1
5.01	Transportation to customer's premises	5 - 1
5.02	Transportation inside the customer's premises	5 - 1
5.03	Disposal of packing materials	5 - 1
5.04	Storage	5 - 1
6	**Explanation of symbols**	6 - 1
7	**Controls**	7 - 1
7.01	Main switch	7 - 1
7.02	Keys on the machine head	7 - 1
7.03	Bobbin thread monitoring with stitch counting	7 - 2
7.04	Pedal	7 - 2
7.05	Knee switch	7 - 3
7.06	Knee lever	7 - 3
7.07	Lever for raising the roller presser	7 - 4
7.08	Swing out roller presser	7 - 4
7.09	Edge trimmer -725/04 for 1571	7 - 5
7.10	Edge trimmer -725/04 for PFAFF 1574 and 1591	7 - 6
7.11	Edge trimmer -726/05 for PFAFF 1591	7 - 7
7.12	Control panel	7 - 8
7.12.01	Displays on the screen	7 - 8
7.12.02	Function keys	7 - 8
8	**Installation and commissioning**	8 - 1
8.01	Installation	8 - 1

Contents ..... Chapter - Page

8.01.01	Adjusting the table height	8 - 1
8.01.02	Fitting the tilt lock	8 - 2
8.01.03	Fitting the machine cover	8 - 2
8.02	Mounting the flange motor	8 - 3
8.02.01	Mounting the flange motor to the bearing plate	8 - 3
8.02.02	Mounting the flange motor to the machine	8 - 3
8.02.03	Connecting the plug-in connections and earth cables	8 - 4
8.02.04	Mounting the toothed belt / Basic position of the machine drive unit on the 1571 and 1591	8 - 5
8.02.05	Mounting the toothed belt / Basic position of the machine drive unit on the 1574	8 - 7
8.02.06	Mounting the belt guard of the flange motor	8 - 9
8.02.07	Connecting the safety switch	8 - 10
8.02.08	Checking the function of the start inhibitor	8 - 10
8.03	Tilted work base	8 - 11
8.04	Table top cutout	8 - 12
8.05	Fitting the reel stand	8 - 13
8.06	Commissioning	8 - 13
8.07	Switching the machine on/off	8 - 13
9	**Setting up**	**9 - 1**
9.01	Inserting the needle on model PFAFF 1571 and 1591	9 - 1
9.02	Inserting the needle on model 1574	9 - 1
9.03	Winding the bobbin thread; adjusting the primary thread tension	9 - 2
9.04	Removing/Inserting the bobbin case	9 - 3
9.05	Threading the bobbin case/Adjusting the bobbin thread tension	9 - 3
9.06	Threading the needle thread and regulating its tension on model 1571 and 1591	9 - 4
9.07	Threading the needle thread and regulating its tension on model 1574	9 - 5
9.08	Entering the stitch length	9 - 6
9.08.01	Entering the standard stitch length	9 - 6
9.08.02	Entering a second stitch length or amount of fullness	9 - 6
9.09	Entering the start and end backtacks	9 - 7
9.10	Entering/changing the code number	9 - 8
9.11	Setting the stitch count function for bobbin thread control	9 - 10
10	**Sewing**	**10 - 1**
10.01	Manual sewing	10 - 1
10.02	Programmed sewing	10 - 2
10.03	Program interruption	10 - 3
10.04	Error messages	10 - 4
11	**Input**	**11 - 1**
11.01	Summary of the functions in the input mode	11 - 1
11.01.01	Summary of the parameter functions	11 - 1
11.01.02	Summary of the seam program inputs	11 - 2

Contents ..... Chapter - Page

11.02	Seam program input variants	11 - 4
11.03	Altering existing seam programs	11 - 5
11.04	Deleting seam programs	11 - 8
11.05	Seam programming examples	11 - 9
11.05.01	An example for seam program input	11 - 9
11.05.02	Seam input example using the Teach In method	11 - 16
12	**Care and maintenance**	**12 - 1**
12.01	Cleaning	12 - 1
12.02	Oiling the hook	12 - 2
12.03	Checking the oil levels	12 - 2
12.04	Filling the oil reservoir of the thread lubrication unit	12 - 3
12.05	Oiling the edge trimmer -726/05	12 - 3
12.06	Lubricating the bevel gears	12 - 4
13	**Adjustment**	**13 - 1**
13.01	Notes on adjustment	13 - 1
13.02	Tools, gauges and other accessories	13 - 1
13.03	Abbreviations	13 - 1
13.04	Adjusting the basic machine	13 - 2
13.04.01	Needle position in the direction of sewing on the PFAFF 1571 and 1591	13 - 2
13.04.02	Positioning the needle in the direction of sewing PFAFF 1574	13 - 3
13.04.03	Limiting the needle bar frame on the PFAFF 1591 and 1571	13 - 4
13.04.04	Preadjusting the needle height	13 - 5
13.04.05	Needle rise, hook clearance, needle height and needle guard on the PFAFF 1571	13 - 6
13.04.06	Needle rise, hook clearance, needle height and needle guard on the PFAFF 1574	13 - 8
13.04.07	Needle rise, hook clearance, needle height and needle guard on the PFAFF 1591	13 - 10
13.04.08	Needle position crosswise to sewing direction on the PFAFF 1571	13 - 12
13.04.09	Needle position crosswise to sewing direction on the PFAFF 1574	13 - 13
13.04.10	Needle position crosswise to sewing direction on the PFAFF 1591	13 - 14
13.04.11	Height and stroke of the bobbin case opener	13 - 15
13.04.12	Height of the feed wheel on the PFAFF 1571	13 - 16
13.04.13	Height of the feed wheel on the PFAFF 1574	13 - 17
13.04.14	Height of the feed wheel on the PFAFF 1591	13 - 18
13.04.15	Clearance between roller presser and feed wheel	13 - 19
13.04.16	Roller-presser	13 - 20
13.04.17	Retainer (only on the PFAFF 1574)	13 - 21
13.04.18	Automatic presser-foot lifter	13 - 22
13.04.19	Knee lever	13 - 23
13.04.20	Tension release	13 - 24
13.04.21	Thread check spring (PFAFF 1571 and 1591)	13 - 25
13.04.22	Thread check springs (PFAFF 1574)	13 - 26
13.04.23	Bobbin winder	13 - 27
13.04.24	Roller-presser pressure	13 - 28
13.04.25	Lubrication	13 - 29

Contents ..... Chapter - Page

13.04.26 Re-engage safety coupling ..... 13 - 30

13.05 Adjusting the edge trimmer -725/04 ..... 13 - 31
13.05.01 Position of the knife holder on model 1571 ..... 13 - 31
13.05.02 Position of the knife holder on models 1574 and 1591 ..... 13 - 32
13.05.03 Knife stroke on model 1571 ..... 13 - 33
13.05.04 Knife stroke on models 1574 and 1591 ..... 13 - 34
13.05.05 Cutting stroke on model 1571 ..... 13 - 35
13.05.06 Cutting stroke on models 1574 and 1591 ..... 13 - 36
13.05.07 Knife position ..... 13 - 37

13.06 Adjusting the thread trimmer -726/05 on model 1591 ..... 13 - 38
13.06.01 Position of the knife to the needle plate ..... 13 - 38
13.06.02 Knife position crosswise to sewing direction ..... 13 - 39
13.06.03 Knife height ..... 13 - 40
13.06.04 Cutting stroke ..... 13 - 41
13.06.05 Knife stroke ..... 13 - 42

13.07 Adjusting the thread trimmer -900/81 ..... 13 - 43
13.07.01 Resting position of the roller lever / radial position of the control cam ..... 13 - 43
13.07.02 Position of the thread catcher holder ..... 13 - 44
13.07.03 Distance between thread catcher and needle plate ..... 13 - 45
13.07.04 Position of the thread catcher ..... 13 - 46
13.07.05 Knife position and knife pressure ..... 13 - 47
13.07.06 Bobbin thread retaining spring ..... 13 - 48
13.07.07 Manual cutting test ..... 13 - 49
13.07.08 Linkage rod (only for the PFAFF 1574) ..... 13 - 50

13.08 Parameter settings ..... 13 - 51
13.08.01 Parameter input example ..... 13 - 51
13.08.02 List of parameters ..... 13 - 52

13.09 Explanation of the error messages ..... 13 - 55

13.10 Warning messages ..... 13 - 55

13.11 Carrying out a cold start ..... 13 - 56

13.12 Internet update of the machine software ..... 13 - 57

14 Wearing parts ..... 14 - 1

15 Circuit diagrams ..... 15 - 1

1 Safety

1.01 Directives

This machine is constructed in accordance with the European regulations contained in the conformity and manufacturer's declarations.
In addition to this Instruction Manual, observe also all generally accepted, statutory and other regulations and legal requirements and all valid environmental protection regulations!
The regionally valid regulations of the social insurance society for occupational accidents or other supervisory organisations are to be strictly adhered to!

1.02 General notes on safety

- This machine may only be operated by adequately trained operators and only after the Instruction Manual has been completely read and understood!
- All Notes on Safety and Instruction Manuals of the motor manufacturer are to be read before operating the machine!
- The danger and safety instructions on the machine itself are to be followed!
- This machine may only be used for the purpose for which it is intended and may not be operated without its safety devices. All safety regulations relevant to its operation are to be adhered to.
- When exchanging sewing tools (e.g. needle, roller presser, needle plate or bobbin), when threading the machine, when leaving the machine unattended and during maintenance work, the machine is to be separated from the power supply by switching off the On/Off switch or by removing the plug from the mains!
- Everyday maintenance work is only to be carried out by appropriately trained personnel!
- Repairs and special maintenance work may only be carried out by qualified service staff or appropriately trained personnel!
- Work on electrical equipment may only be carried out by appropriately trained personnel!
- Work is not permitted on parts and equipment which are connected to the power supply! Exceptions to this are only to be found in the regulations EN 50110.
- Modifications and alterations to the machine may only be carried out under observance of all the relevant safety regulations!
- Only spare parts which have been approved by us are to be used for repairs! We expressly point out that any replacement parts or accessories, which are not supplied by us, have not been tested and approved by us. The installation and/or use of any such products can lead to negative changes in the structural characteristics of the machine. We shall not be liable for any damage which may be caused by non-original parts.

1.03 Safety symbols



Danger!
Points to be observed.



Danger of injury for operating and specialist personnel!



Caution

Do not operate without finger guard and safety devices. Before threading, changing bobbin and needle, cleaning etc. switch off main switch.

1.04 Important points for the user

- This Instruction Manual is a component part of the machine and must be available to the operating personnel at all times.
- The Instruction Manual must be read before operating the machine for the first time.
- The operating and specialist personnel is to be instructed as to the safety equipment of the machine and regarding safe work methods.
- It is the duty of the user to only operate the machine in perfect running order.
- It is the obligation of the user to ensure that none of the safety mechanisms are removed or deactivated.
- It is the obligation of the user to ensure that only authorized persons operate and work on the machine.

Further information can be obtained from your PFAFF agent.

1.05 Operating and specialist personnel

1.05.01 Operating personnel

Operating personnel are persons responsible for the equipping, operating and cleaning of the machine as well as taking care of faults arising in the sewing area.

The operating personnel is obliged to observe the following points and must:

- always observe the Notes on Safety in the Instruction Manual!
- never use any working methods which could limit the level of safety in using the machine!
- not wear loose-fitting clothing or jewellery such as chains or rings!
- also ensure that only authorized persons have access to the potentially dangerous area around the machine!
- always immediately report to the person responsible any changes in the machine which may limit its safety!

1.05.02 Specialist personnel

Specialist personnel are persons with a specialist education in the fields of electrics, electronics and mechanics. They are responsible for the lubrication, maintenance, repair and adjustment of the machine.

The specialist personnel is obliged to observe the following points and must:

- always observe the Notes on Safety in the Instruction Manual!
- switch off the On/Off switch before carrying out adjustments or repairs and ensure that it cannot be switched on again unintentionally!
- never work on parts which are still connected to the power supply! Exceptions are contained only in the regulations EN 50110.
- replace the protective coverings and close the electrical control box after all repairs or maintenance work!

1.06 Danger

A working area of 1 meter is to be kept free both in front of and behind the machine while it is in operation so that it is always easily accessible.

Never reach into the sewing area while sewing! Danger of injury by the needle!

Never leave objects on the table while adjusting the machine settings!
Objects can become trapped or be slung away! Danger of injury!

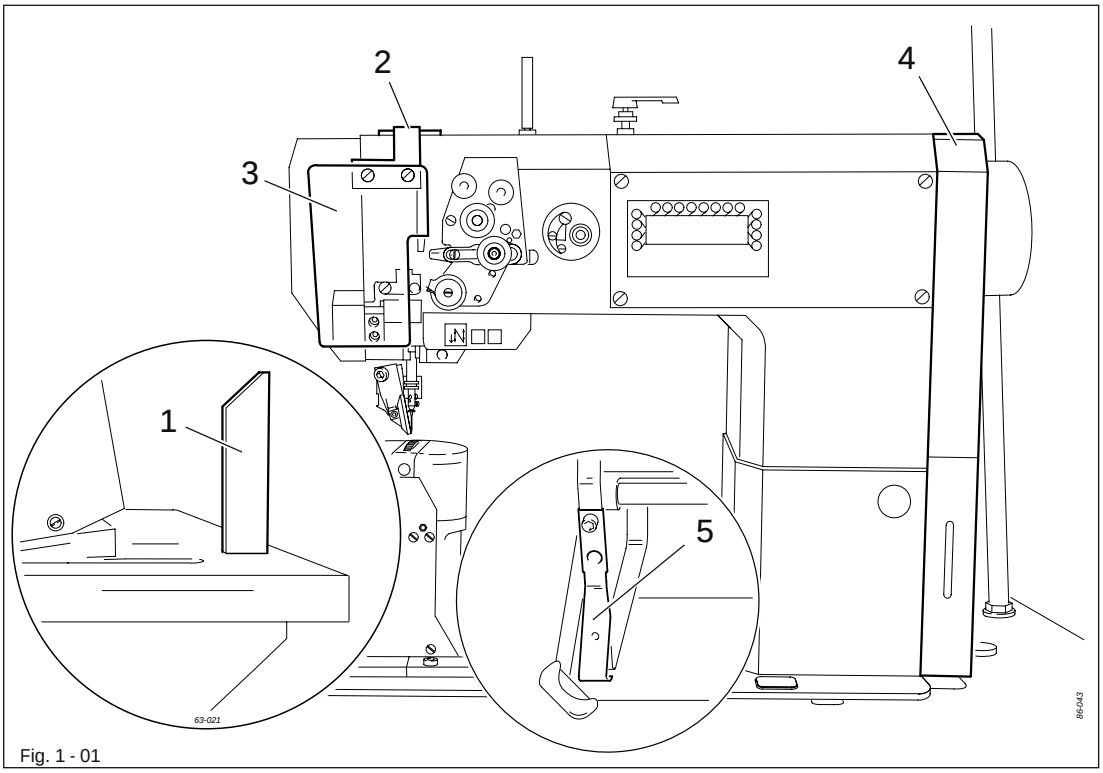

Fig. 1 - 01

Do not operate the machine without support 1! Danger due to top-heavy sewing head! Machine can tip over backwards when tilted!

Do not operate the machine without its take-up-lever guard 2!
Danger of injury due to the motion of the take-up lever!

Only operate the machine if eye shield 3 has been pulled down!
Eye shield 3 is a protection against oil particles from the thread lubrication.

Do not operate the machine without machine cover 4!
Danger of injury from moving parts!

Do not operate the machine without tilt lock 5!
Danger of crushing between the machine head and table top!

2 Proper use

The PFAFF 1571 and PFAFF 1591 are high-speed, single-needle postbed sewing machines with a forwards and reverse feeding feed wheel and roller presser and needle feed.
PFAFF 1571 Post to the left of the needle.
PFAFF 1591 Post to the right of the needle.

The PFAFF 1574 is a high-speed, two-needle postbed sewing machines with a forwards and reverse feeding feed wheel and roller presser.

The machines are used for sewing lockstitch seams in the leather and upholstery industries.



Any use of these machines which is not approved by the manufacturer shall be considered as improper use! The manufacturer shall not be liable for any damage arising out of improper use! Proper use shall also be considered to include compliance with the operation, adjustment, service and repair measures specified by the manufacturer!

3 Specifications

3.01 PFAFF 1571, 1574, 1591 ▲

Stitch type: ..... 301 (lockstitch)

Clearance under roller presser: ..... 7 mm
Clearance width: ..... 245 mm
Clearance height: ..... 115 mm
Post height: ..... 180 mm

Sewing head dimensions:
Length: ..... approx. 615 mm
Width: ..... approx. 240 mm
Height (above table): ..... approx. 500 mm
Bedplate dimensions: ..... 518 x 177 mm

Max. speed:
PFAFF 1571, 1574, 1591 Model A + B ..... 3500 spm ◆
PFAFF 1574 Model A + B ..... 2600 spm ◆
PFAFF 1574, 1591 Model C ..... 2000 spm ◆

Max. stitch length: ..... 5.0 mm
Cutting depth (for –725/..): ..... 0.8 – 2.5 mm
Cutting speed (for –725/..): ..... 2800 cuts/min.

Connection data:
Operating voltage: ..... 230 V ± 10%, 50/60 Hz
Max. power consumption: ..... 1.2 kVA
Fuse protection: ..... 1 x 16 A, inert

Noise data::
Emission level at workplace at appropriate speed
(Noise measurement in accordance with DIN 45 635-48-A-1, ISO 11204, ISO 3744, ISO 4871)
PFAFF 1571 and 1591, model A + B at a speed of 2800 spm.: ..... L_{pA} = 80 dB(A) ■
PFAFF 1574 model B at a speed of 2800 spm.: ..... L_{pA} = 81 dB(A) ■
PFAFF 1574 and 1591,model C at a speed of 1600 spm.: ..... L_{pA} = 74 dB(A) ■

Net weight of sewing head: ..... approx. 61 kg
Gross weight of sewing head: ..... approx. 71 kg

▲ Subject to alteration

◆ Dependent on material, work operation and stitch length

■ K_{pA} = 2,5 dB

3.02 Needles and threads

Model	Thread thickness▲ (Nm) max. synthetic	Needle thickness in 1/100 mm	Needle system for PFAFF 1571	Needle system for PFAFF 1574	Needle system for PFAFF 1591
A	60/3	70	134	-	134
B	40/3	100	134	134 - 35	134
C	15/3	130	-	134 - 35	134

▲ or similar strengths of other types of thread

3.03 Possible models and subclasses

PFAFF 1571, 1591
Model A ..... For sewing lightweight materials

PFAFF 1571, 1574, 1591
Model B ..... For sewing medium-weight materials

PFAFF 1574, 1591
Model C ..... For sewing medium-heavy materials

Additional equipment:
Subclass -725/04 ..... Edge trimmer
Subclass -726/05 ..... Edge trimmer
Subclass -900/81 ..... Thread trimmer
Subclass -910/15 ..... Automatic presser foot lifter

4 Disposal of Machine

- Proper disposal of the machine is the responsibility of the customer.
- The materials used for the machine are steel, aluminium, brass and various plastic materials.
  The electrical equipment comprises plastic materials and copper.
- The machine is to be disposed of according to the locally valid pollution control regulations; if necessary, a specialist ist to be commissioned.



Care must be taken that parts soiled with lubricants are disposed of separately according to the locally valid pollution control regulations!

5 Transportation, packing and storage

5.01 Transportation to customer's premises

The machines are delivered completely packed.

5.02 Transportation inside the customer's premises

The manufacturer cannot be made liable for transportation inside the customer's premises nor to other operating locations. It must be ensured that the machines are only transported in an upright position.

5.03 Disposal of packing materials

The packing materials of this machine comprise paper, cardboard and VCE fibre. Proper disposal of the packing material is the responsibility of the customer.

5.04 Storage

If the machine is not in use, it can be stored as it is for a period of up to six months, but It should be protected against dust and moisture.
If the machine is stored for longer periods, the individual parts, especially the surfaces of moving parts, must be protected against corrosion, e.g. by a film of oil.

6 Explanation of symbols

In this instruction manual, work to be carried out or important information is accentuated by symbols. These symbols have the following meanings:



Note, information



Cleaning, care



Lubrication

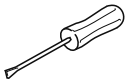

Maintenance, repairs, adjustment, service work
(only to be carried out by technical staff)

7 Controls

7.01 Main switch

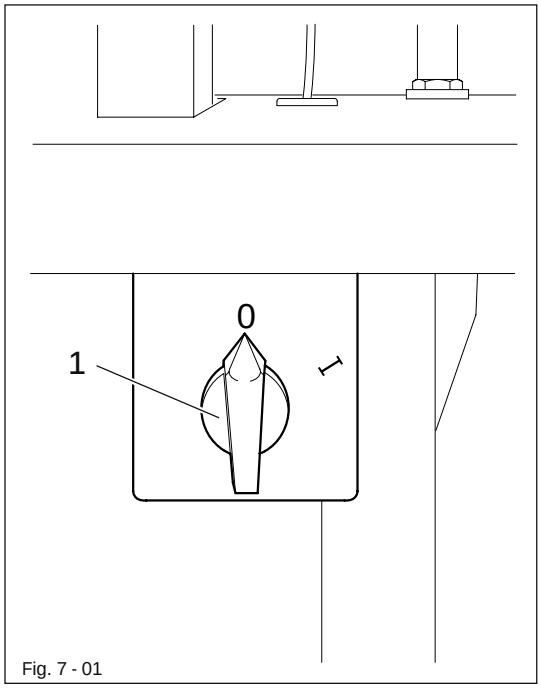

Fig. 7 - 01

- Turn the machine on and off by turning main switch 1.

7.02 Keys on the machine head

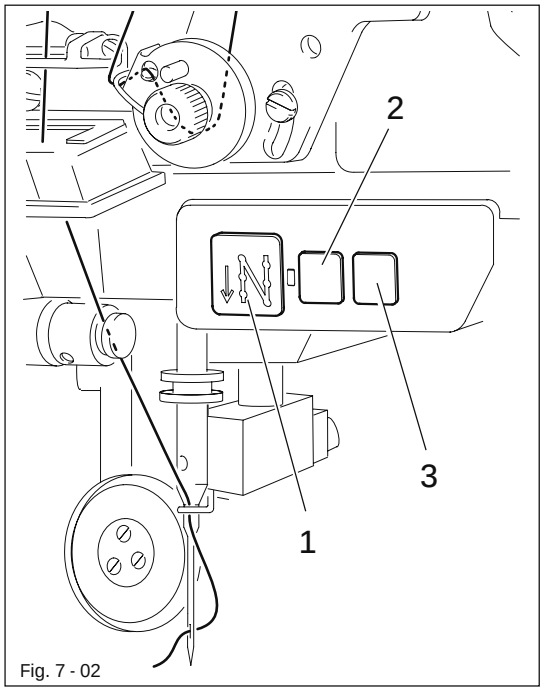

Fig. 7 - 02

- As long as key 1 is pressed in the sewing mode, the machine sews in reverse.
- With parameters "203" and "204" functions can be allotted to the keys 2, see Chapter 13.08 Parameter settings.

7.03 Bobbin thread monitoring with stitch counting

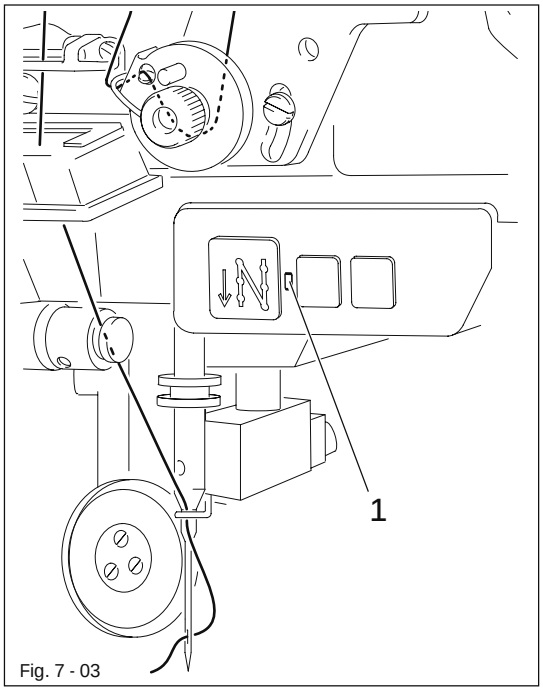

Fig. 7 - 03

- About 100 stitches before reaching the preset number of stitches, LED 1 flashes.
- After the thread has been trimmed and the bobbin changed, the stitch counting begins anew.

Presetting the number of stitches, see Chapter 9.10 Setting the stitch counting function for bobbin thread monitoring.

7.04 Pedal

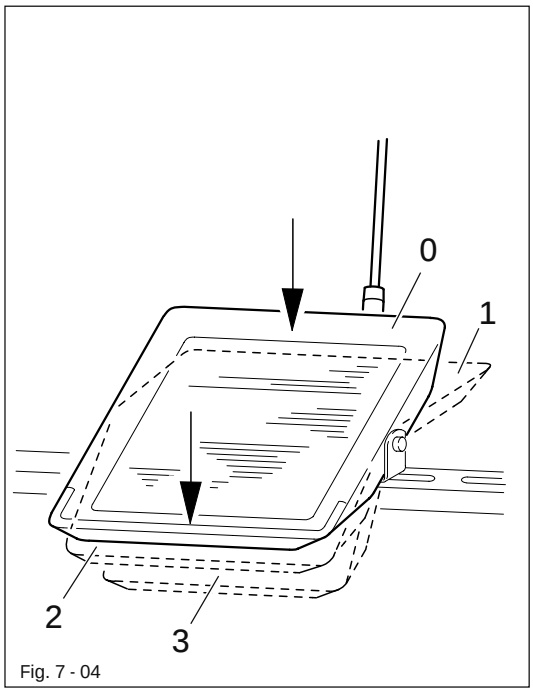

Fig. 7 - 04

0 = Machine stop

1 = Sew

2 = Raise roller presser

3 = Trim thread and raise roller presser

Other pedal functions can be set with the programming function, see Chapter 10 Sewing.

7.05 Knee switch

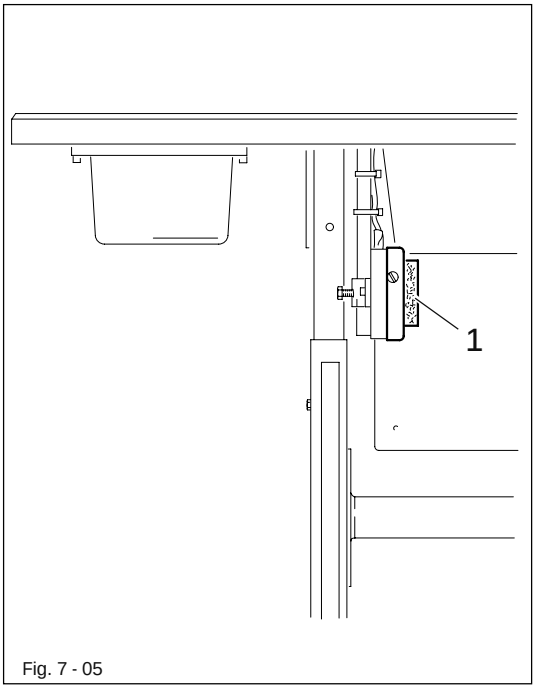

Fig. 7 - 05

- By operating knee switch 1 it is possible to choose between 2 preset amounts of fullness or 2 stitch lengths.
- In the programmed sewing mode it is possible to switch to the next seam section with knee switch 1.

The function of knee switch 1 must be switched on with the control panel (see chapter 10 Sewing)

7.06 Knee lever

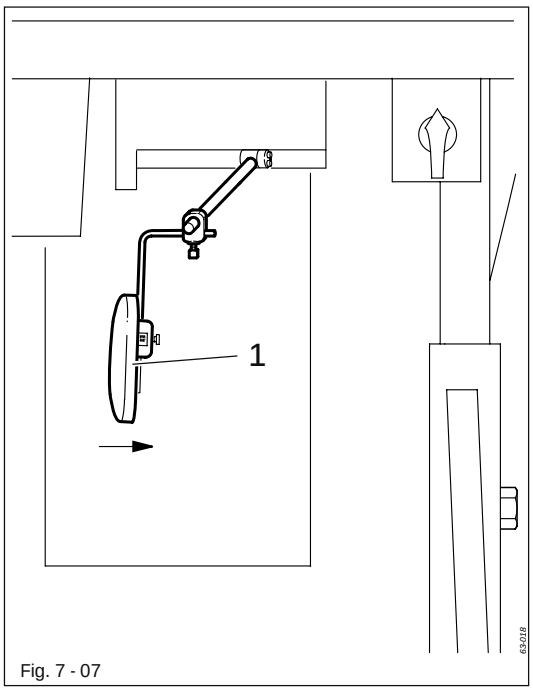

Fig. 7 - 07

- The roller presser can be raised by pressing the knee lever 1 in the direction of the arrow.

7.07 Lever for raising the roller presser

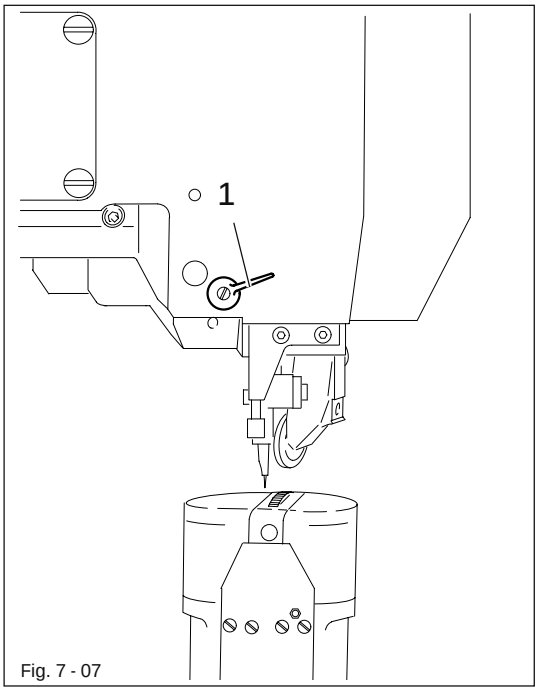

Fig. 7 - 07

- The roller presser is raised by turning lever 1**.**

Fig. 7-07 shows the 1574.

7.08 Swing out roller presser

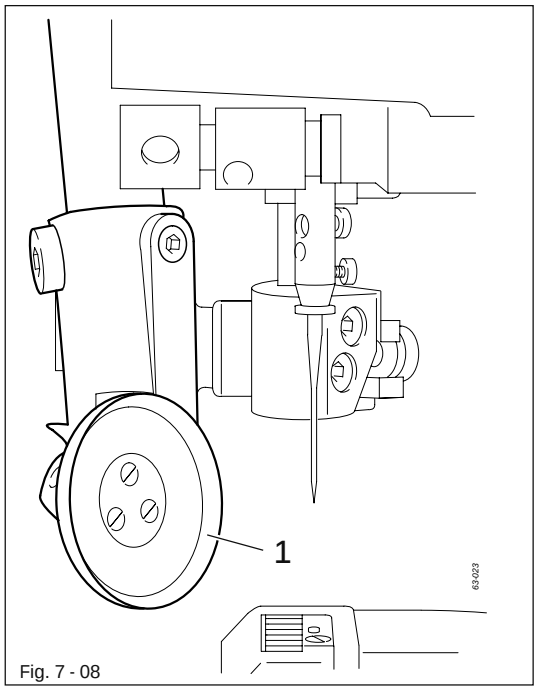

Fig. 7 - 08

- When roller presser 1 is raised, it is possible to disengage it by pulling it down slightly.

7.09 Edge trimmer -725/04 for 1571

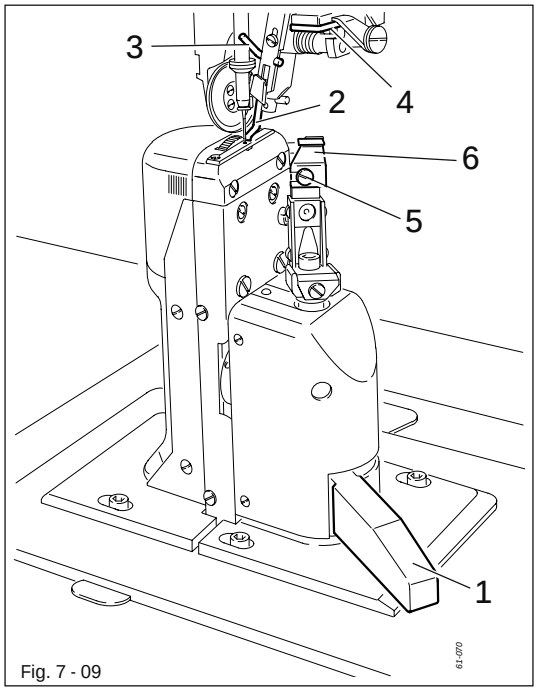

Fig. 7 - 09



Keep your hands away from the moving knife! Danger of injury!

Switch on knife drive:

- Move lever 1 backwards. The knife moves into operating position.

Switch off knife drive:

- Press lever 1. The knife swings backwards.

Switch on edge guide:

- Swing edge guide 2 into position by hand and press lever 3. The edge guide 2 moves into its operating position.

Switch off edge guide:

- Raise edge guide 2 and let it click into position. The edge guide 2 is out of operation.
- Raise lever 4. The edge guide swings backwards.

Changing the knife:



The following work may only be carried out by technical staff or by persons who have been properly instructed.

- Switch off the machine.
- Loosen screw 5 and remove knife 6.
- Insert new knife and slightly tighten screw 5.
- Adjust the knife according to Chaper 13.05.05 Cutting stroke and tighten screw 5.

7.10 Edge trimmer -725/04 for PFAFF 1574 and 1591

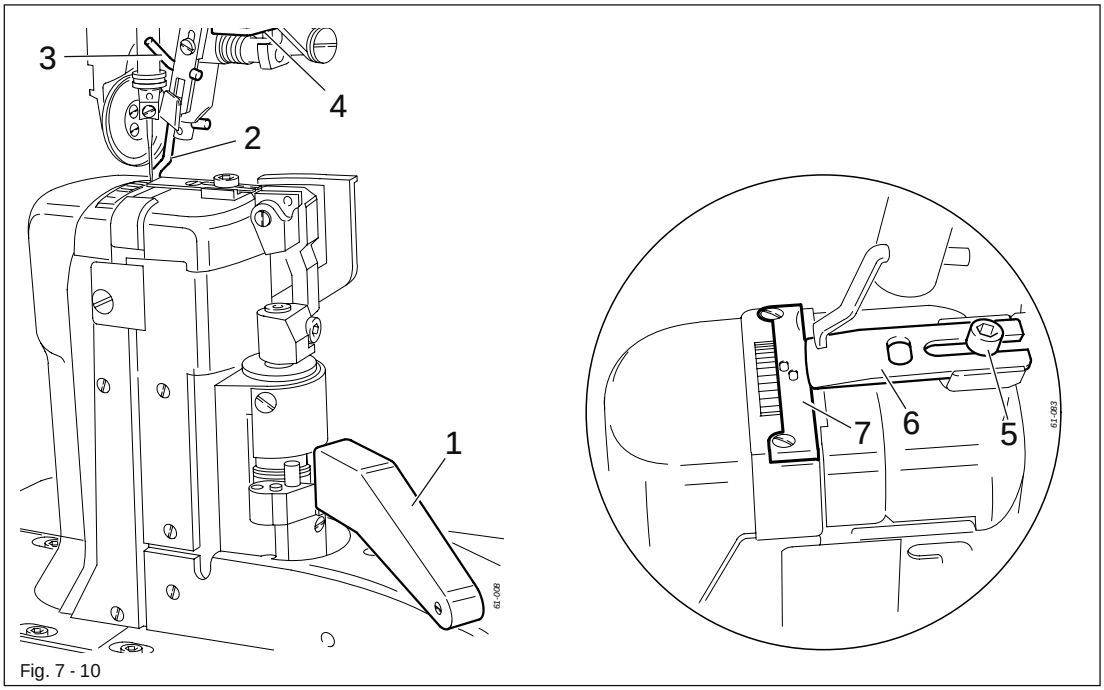

Fig. 7 - 10

Keep your hands away from the moving knife! Danger of injury!

Switch on knife drive:

- Move lever 1 backwards. The knife moves into operating position.

Switch off knife drive:

- Press lever 1. The knife swings backwards.

Switch on edge guide:

- Swing edge guide 2 into position by hand and press lever 3. The edge guide 2 moves into its operating position.

Switch off edge guide:

- Raise edge guide 2 and let it click into position. The edge guide 2 is out of operation.
- Raise lever 4. The edge guide swings backwards.

Changing the knife:

The following work may only be carried out by technical staff or by persons who have been properly instructed.

- Switch off the machine.
- Loosen screw 5 and remove knife 6.
- Insert new knife and push it close to needle plate insert 7.
- Slightly tighten screw 5.
- Adjust the knife according to Chaper 13.05.07 Knife position and tighten screw 5.

7.11 Edge trimmer -726/05 for PFAFF 1591

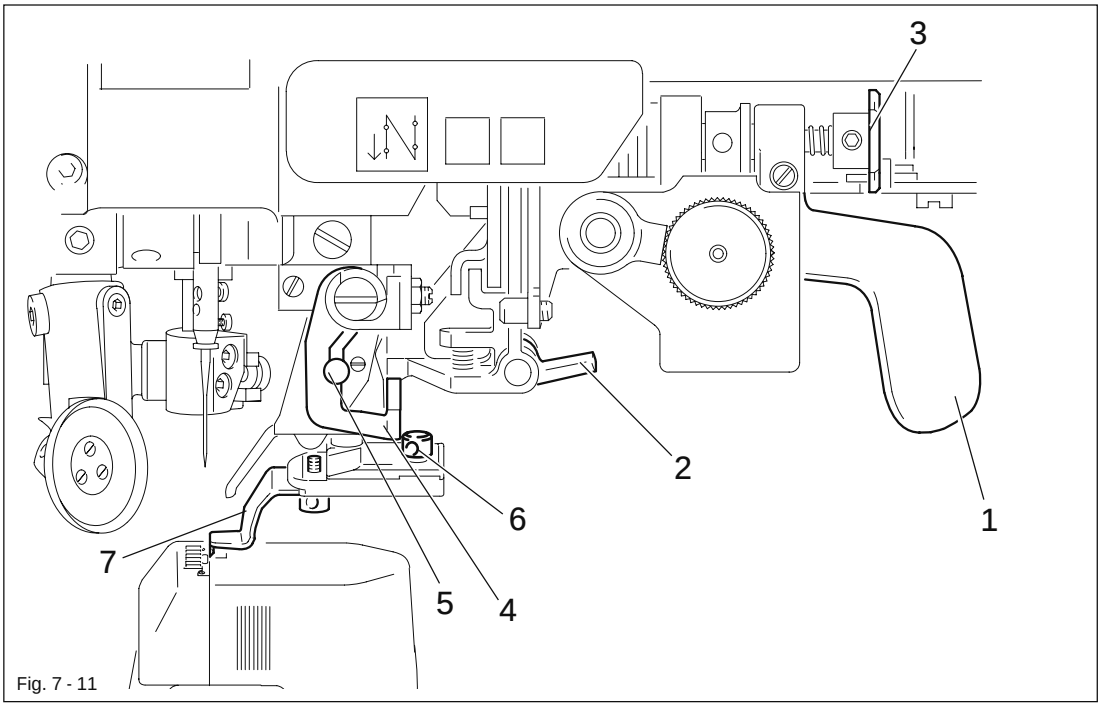

Fig. 7 - 11

Keep your hands away from the moving knife! Danger of injury!

Switch on knife drive:

- By turning lever 1 the knife is moved into its operating position.

Switch off knife drive:

- By pressing lever 2 or key 3 the knife is put out of operation.

Switch on edge guide:

- After lever 4 has been pressed, the edge guide moves into its starting position.

Switch off edge guide:

- By raising lever 5, the edge guide is put out of operation.

Changing the knife:

The following work may only be carried out by technical staff or by persons who have been properly instructed.

- Switch off the machine.
- Loosen screw 6 and remove knife 7.
- Insert new knife and push it close to needle plate insert.
- Tighten screw 6.
- Adjust the knife according to Chapter 13.06.01 Position of the knife to the needle plate and Chapter 13.06.02 Knife crosswise to sewing direction.

7.12 Control panel

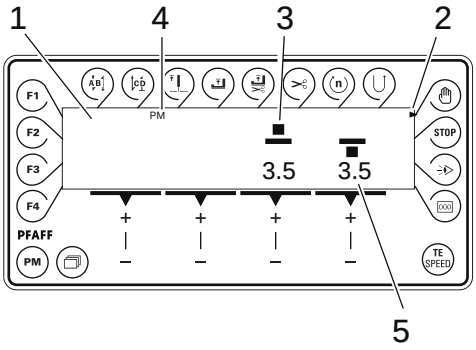

The control panel consists of display **1** and the function keys described below. Display **1** consists of a two-row, alpha-numerical display with 16 symbols per row. The special symbols **3** and texts **4** show the respective status of the function keys and the operating modes of the machine.
During the power-on phase the control panel automatically switches on all LCD segments and a beep tone for a short time. Afterwards the lettering PFAFF appears on the display, until the higher-ranking control unit sends commands to the control panel.

7.12.01 Displays on the screen

- Connected functions are shown with a triangular symbol 2 below or next to the respective function key.
- In sewing mode all relevant sewing data is displayed and can be changed directly depending on the machine status, also see Chapter 10 Sewing.
- When entering the parameters, the selected parameter number with the corresponding parameter value is displayed, see Chapter 13.08.01 Parameter input.
- When entering the seam programs, the data is entered in corresponding input menus, see Chapter 11 Input.

7.12.02 Function keys

The function keys described below are used basically to switch the machine functions on and off.

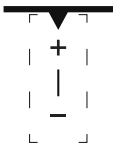

If a value must be given for the activated function, this is entered with the relevant +/- key. By pressing down the relevant +/- key the corresponding value 5 is changed slowly. If the +/- key is held down longer, the values change more quickly.



Start backtacks

- By pressing this key, the backtacking function at the beginning of the seam (start backtacks) is switched on or off. The number of forward stitches (A) or reverse stitches (B) for the start backtacks can be changed in each case by pressing the +/- key underneath. To convert from double backtacks to single backtacks the relevant number of stitches for the seam segment is set at zero.
- When entering the code number, the key corresponds to the number 1.



End backtacks

- By pressing this key, the backtacking function at the end of the seam (end backtacks) is switched on or off. The number of reverse stitches (C) or forward stitches (D) can be changed in each case by pressing the +/- key underneath. To convert from double backtacks to single backtacks the relevant number of stitches for the seam segment is set at zero.
- When entering the code number, the key corresponds to the number 2.



Needle position

- By pressing this key the function "Needle raised after sewing stop" is switched on or off. When the function is switched on, the needle positions at t.d.c. after sewing stops.
- When entering the code number, the key corresponds to the number 3.



Foot position after stop

- By pressing this key the function "Foot raised after sewing stop" is switched on or off. When the function is switched on, the sewing foot is raised after sewing stops.
- When entering the code number, the key corresponds to the number 4.



Foot position after trimming

- By pressing this key the function "Foot raised after thread trimming" is switched on or off. When the function is switched on, the sewing foot is raised after sewing thread trimming.
- When entering the code number, the key corresponds to the number 5.



Thread trimmer

- By pressing this key the thread trimming function is switched on or off.
- When entering the code number, the key corresponds to the number 6.



Speed

- With this key for each seam section a maximum speed can be set, which is only activated in the relevant seam section.
- When entering the code number, the key corresponds to the number 7.



Reverse sewing

- By pressing this key the reverse sewing function is switched on or off.
- When entering the code number, the key corresponds to the number 8.



Program interruption

- By pressing this key the automatic processing of a sewing program is interrupted. The stitch count function is switched off and some of the sequences are changed.
- When entering the code number, the key corresponds to the number 9.



Stop

- By pressing this key the corresponding function is switched on or off. If the function is activated, in the programmed sewing mode the machine stops automatically at the end of the seam section.
  In the manual sewing mode, if this function is activated, the roller presser and feel wheel drive are switched off, in order to e.g. wind the bobbin outside the sewing operation.
- When entering the code number, this key corresponds to the number 0.



Sensor

- By pressing this key the corresponding function is switched on or off. When the function is switched on, the sensor moves on to the next seam section.



Stitch counting

- By pressing this key the corresponding function is switched on or off. When the function is switched on, the machine moves to the next sewing section after the number of stitches entered have been sewn.



TE/Speed

- By pressing this key once the speed limitation for sewing mode is activated.
- By pressing the key twice (within 5 seconds) the machine switches from sewing mode to input mode.



Scrolling

- When this key is pressed, it is possible to scroll through the input menus on the display.



PM

- By pressing this key the Programmed Sewing function is switched on or off. When the function is switched on, the lettering "PM" appears in the display of the control panel. The parameters of the programs are shown in the alpha-numerical section of the display.



F1

- When this key is pressed, the stitch placement function at the beginning of the seam is switched on or off. The corresponding needle position is set on the keyboard and by turning the balance wheel.



F2

- This key is not assigned at present.



F3

- When this key is pressed the corresponding function is switched on or off. When the function is activated, the machine moves to the next seam section with the use of the knee switch



F4

- After this key has been pressed, the next bartack is not sewn.

8 Installation and commissioning

The machine must only be installed and commissioned by qualified personnel!
All relevant safety regulations must be strictly adhered to!

If the machine is delivered without a table, be sure to use a stand and table top that can hold the weight of the machine with its motor.
It is very important to ensure that the stand of the machine is firm and steady, also during sewing.

8.01 Installation

The site where the machine is installed must be provided with suitable connections for electric current.
It must be ensured that the standing surface of the machine site is firm and horizontal, and that sufficient lighting is provided for.

For packing and transportation reasons the table top is in the lowered position.
The table height is adjusted as described below.

8.01.01 Adjusting the table height

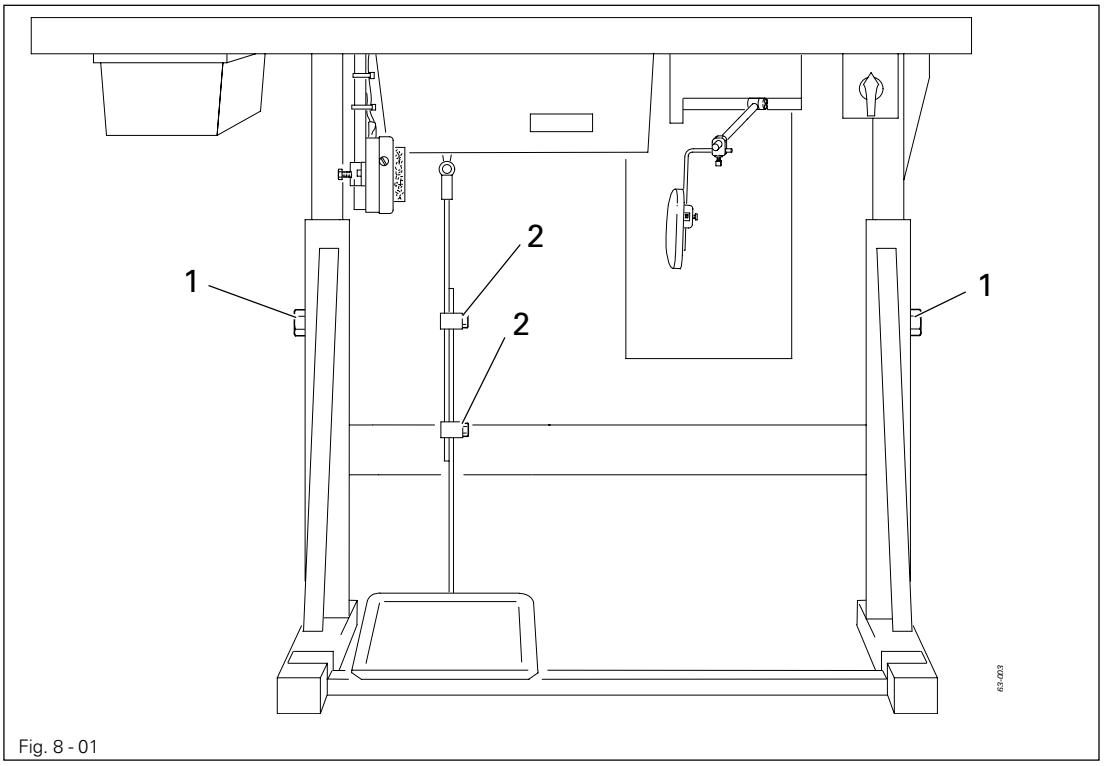

Fig. 8 - 01

- Loosen screws **1** and **2** and set the table height as required.
- Firmly tighten screw **1**.
- Set the required pedal position and tighten screw **2**.

8.01.02 Fitting the tilt lock

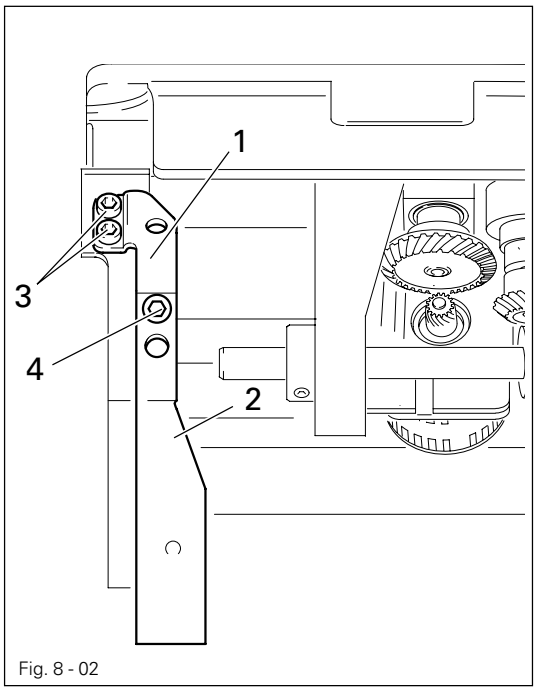

Fig. 8 - 02



Switch off the machine! Danger of injury if the machine is the machine is started accidentally!

- Screw on tilt lock parts **1** and **2**, provided in the accessories, using screws **3** and **4.**



Do not operate the machine without tilt lock **1**. Danger of crushing between sewing head and table top!

8.01.03 Fitting the machine cover

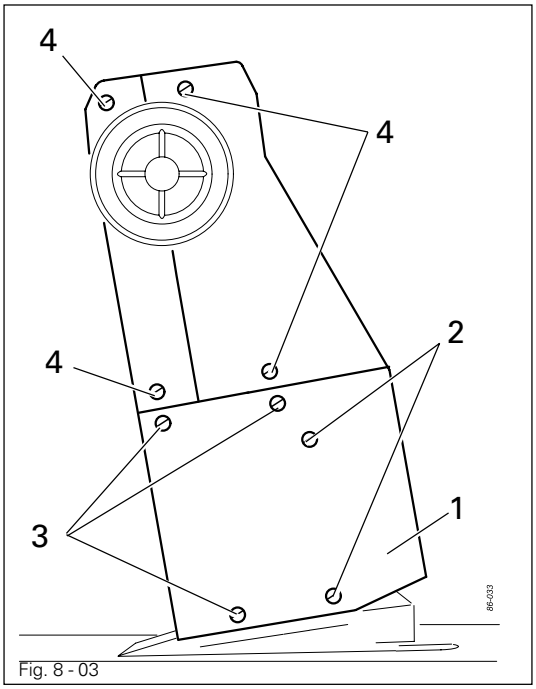

Fig. 8 - 03

- Slide the slots of bottom cover **1** behind the heads of fastening screws **2** and attach with screws **3**. Then tighten screws **2** through the boreholes.
- Attach the right and left cover with screws **4**.

8.02 Mounting the flange motor

8.02.01 Mounting the flange motor to the bearing plate

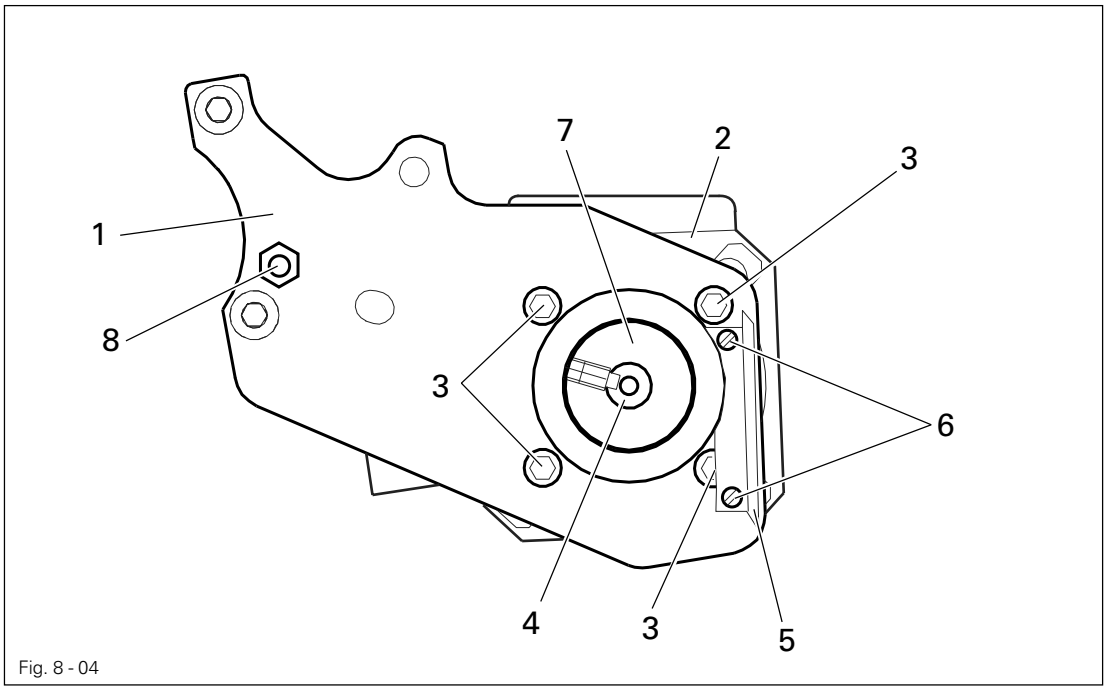

Fig. 8 - 04

- Attach bearing plate **1** to motor **2** with screws **3** as shown in **Fig. 8 - 04**.
- Remove the wedge from motor shaft **4**.
- Attach angle bracket **5** with screws **6**.
- Fit toothed belt wheel **7** to the motor shaft **4**, so that the point of the screw is located in the groove of the motor shaft.
- Screw threaded stud **8** into the bearing plate **1.**

8.02.02 Mounting the flange motor to the machine

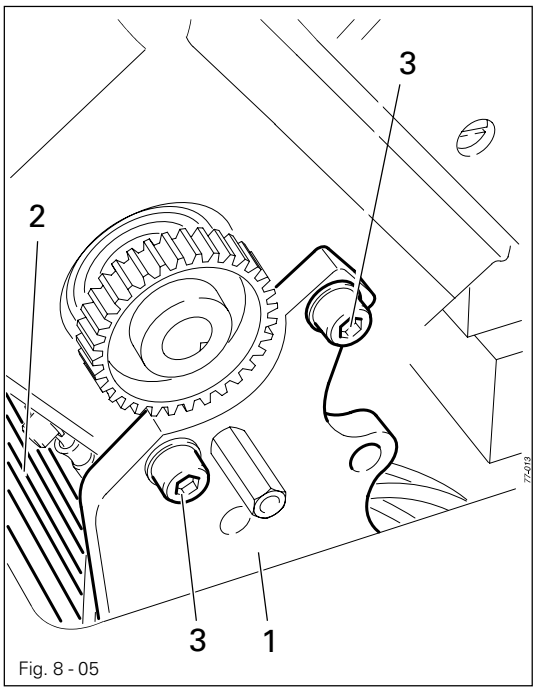

Fig. 8 - 05

- Attach bearing plate **1** of motor **2** to the machine case with screws **3** (only tighten screws **3** slightly).

8.02.03 Connecting the plug-in connections and earth cables

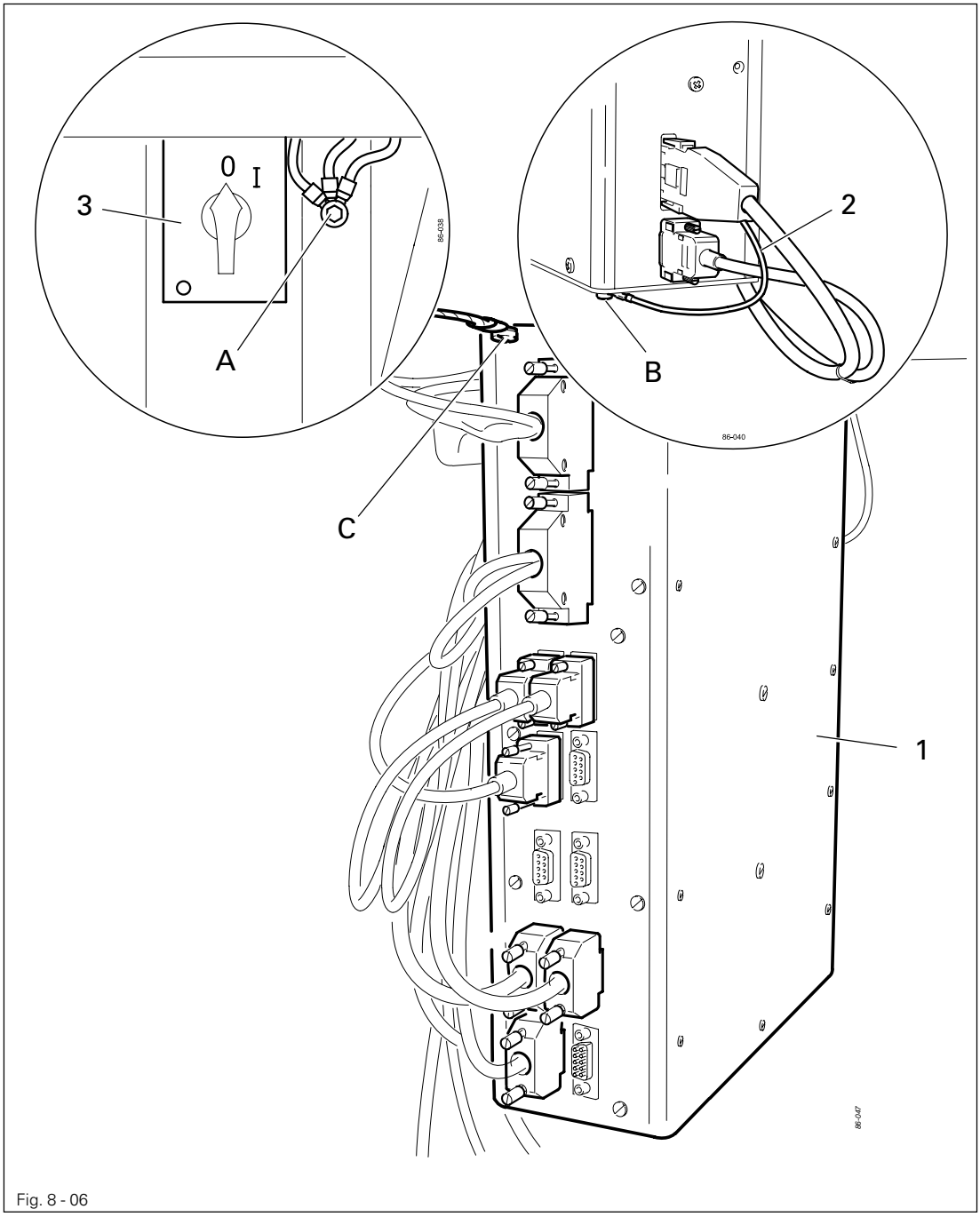

Fig. 8 - 06

- Connect all plugs as labelled to the control box **1**.
- On the PFAFF 1574 an adapter cable must be plugged into socket **X3** (also see Fig. 8 - 09).
- Screw the earth cable from the sewing head to earth point **A**.
- Screw the earth cable **2** from the motor to earth point **B**.
- Connect earth point **C** and earth point **A** with an earth cable.
- Fasten the earth cable of the main switch **3** to earth point **A**.

8.02.04 Mounting the toothed belt /
Basic position of the machine drive unit on the 1571 and 1591

- Switch on the machine.

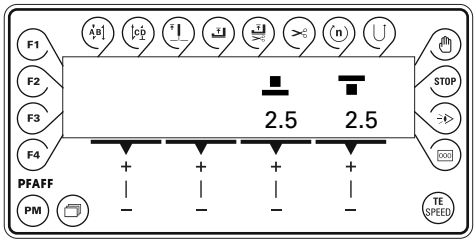

2 x TE SPEED

- Press **TE/Speed** key twice to select the input mode.

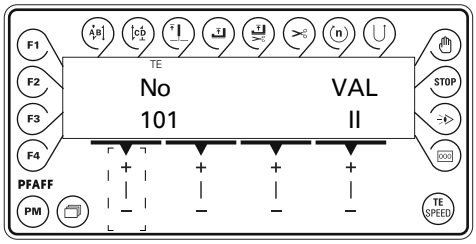

No

- Select the parameter group "600" by pressing the corresponding **+/- key.**

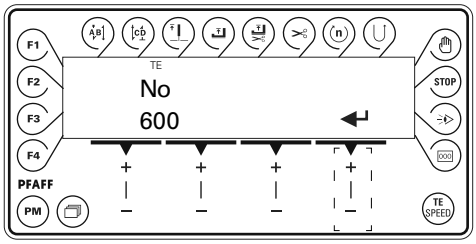

↵

- Confirm the selection by pressing the corresponding **+/- key**.
- Enter the code number, see **Chapter 9.10 Entering/changing the code number.**

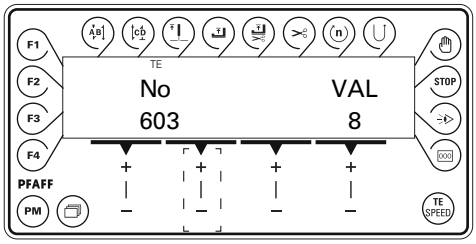

↵

- Select the parameter group "603" by pressing the corresponding **+/- key**.
- Turn the motor shaft by hand until value „8“ appears in the display.
- Turn the balance wheel in sewing direction until the needle point descending from above, is level with the top edge of the needle plate.
- Taking care not to turn the motor shaft **4** (Fig. 8 - 07) or the machine, fit synchronous belt **5**.

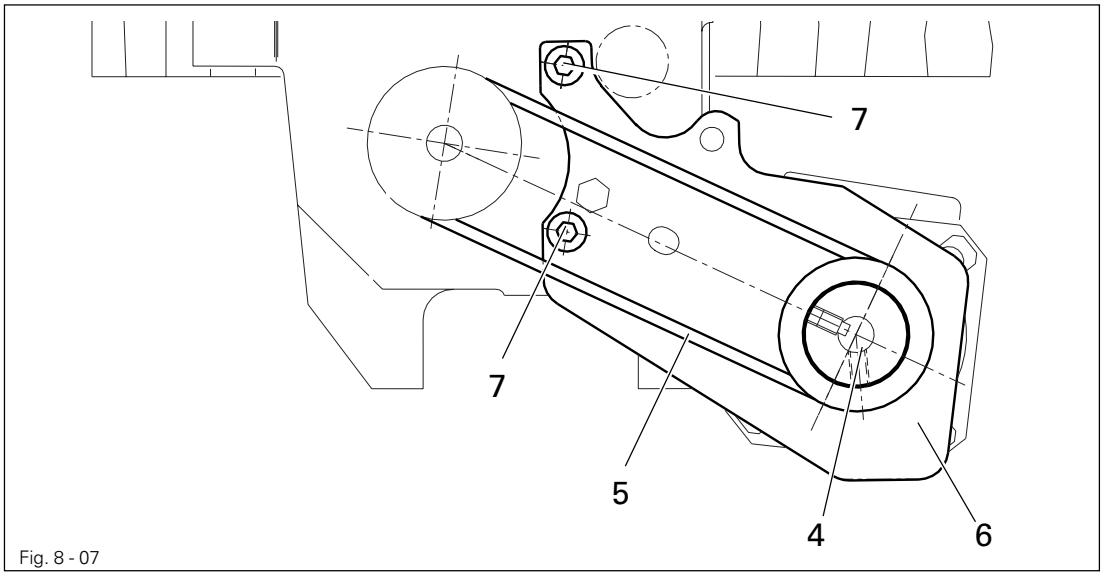

Fig. 8 - 07

- Swing the bearing plate **6** of the motor, so that the belt **5** is tightened.
- In this position tighten screws **7**.
- Turn the balance wheel in sewing direction until the needle point descending from above, is level with the top edge of the needle plate and re-check the value. A tolerance of **± 2 increments** is allowed.
- Conclude the adjustment of the sewing motor by pressing the **TE/Speed** key.

8.02.05 Mounting the toothed belt / Basic position of the machine drive unit on the 1574

- In this position fit toothed belt **5 (Fig. 8 - 07)**.
- Swing the bearing plate **6** of the motor, so that the toothed belt **5** is tensioned.
- In this position tighten screws **7**.

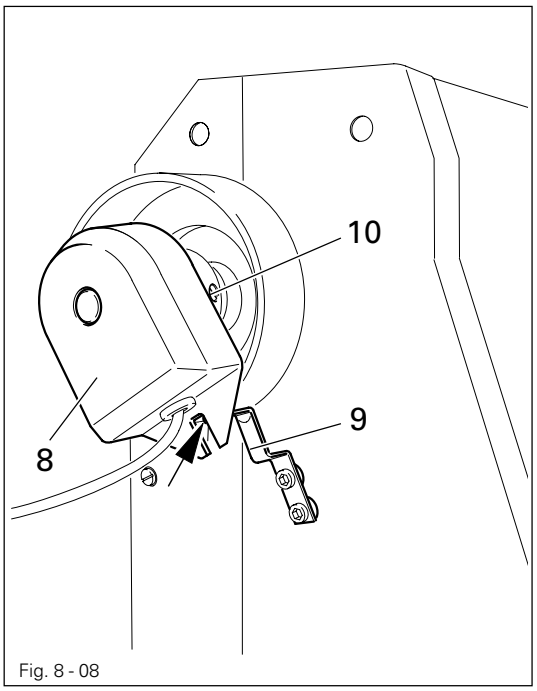

Fig. 8 - 08

- Push synchronizer **8** onto the shaft so that stop **9** is standing in the slot on the synchronizer (see arrow)
- Tighten screws **10**.
- Plug adapter cable **11** to socket **X3** on the control box.
- Connect synchronizer **12** to plug **S**.
- Connect motor to plug **R**.
- Connect earth cable **13** to the case.

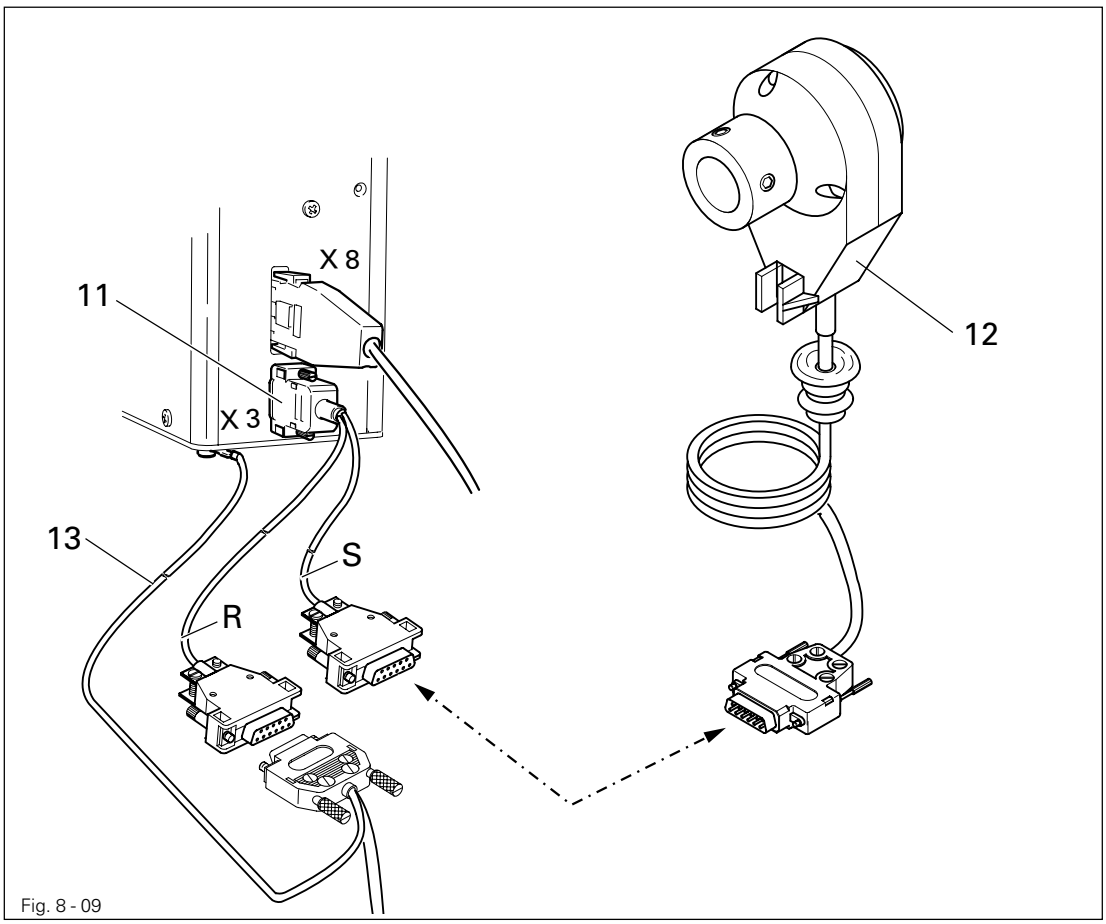

Fig. 8 - 09

- Switch on the machine.

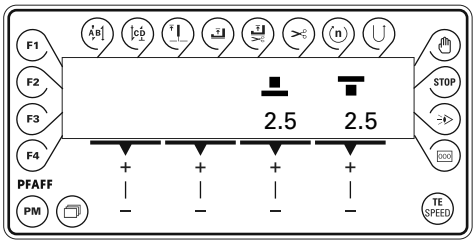

2 x TE SPEED

- Press TE/Speed key twice to select the input mode.

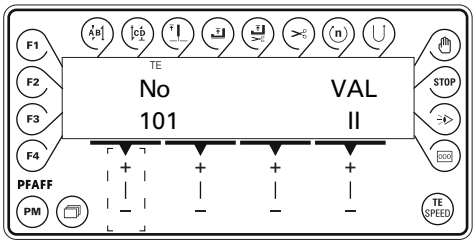

No

- Select the parameter group "600" by pressing the corresponding +/- key.

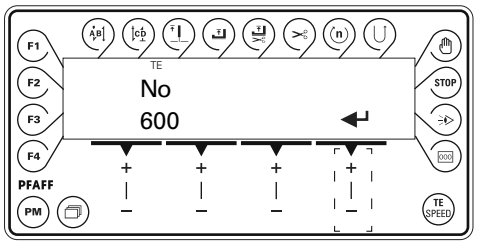

↵

- Confirm the selection by pressing the corresponding +/- key.
- Enter the code number, see Chapter 9.10 Entering/changing the code number.

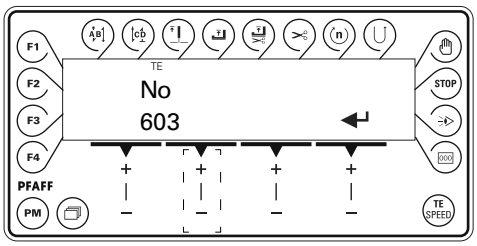

↵

- Select the parameter group "603" by pressing the corresponding +/- key.

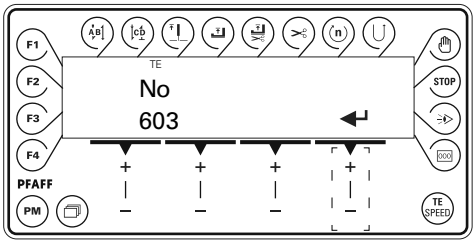

- Let the machine carry out one revolution by pressing the corresponding +/- key.
- Check the needle bar position.

- Loosen screws **10** of the synchronizer. Hold the synchronizer shaft and turn the balance wheel in sewing direction until the needle point, descending from above, is level with the top edge of the needle plate.
- Tighten the screws of the synchronizer.
- By pressing the corresponding **+/- key** let the machine carry out another revolution and check the setting – if necessary repeat the adjustment operation.



- Conclude the adjustment of the sewing motor by pressing the **TE/Speed** key.

8.02.06 Mounting the belt guard of the flange motor

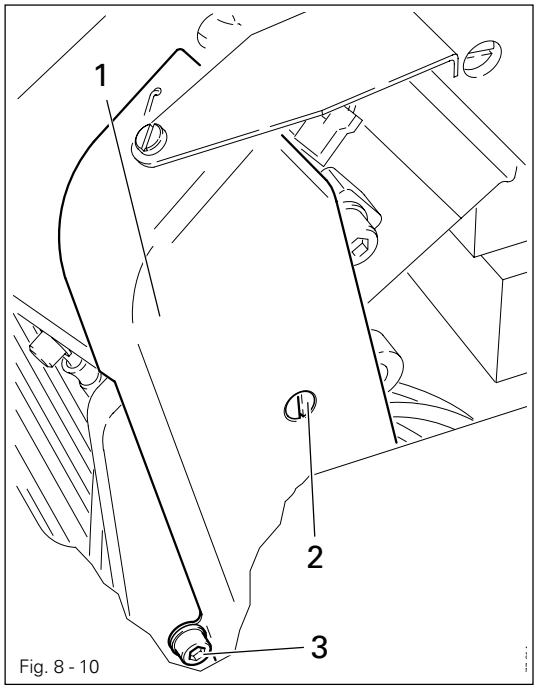

Fig. 8 - 10

- Attach belt guard **1** with screws **2** and **3**.

8.02.07 Connecting the safety switch

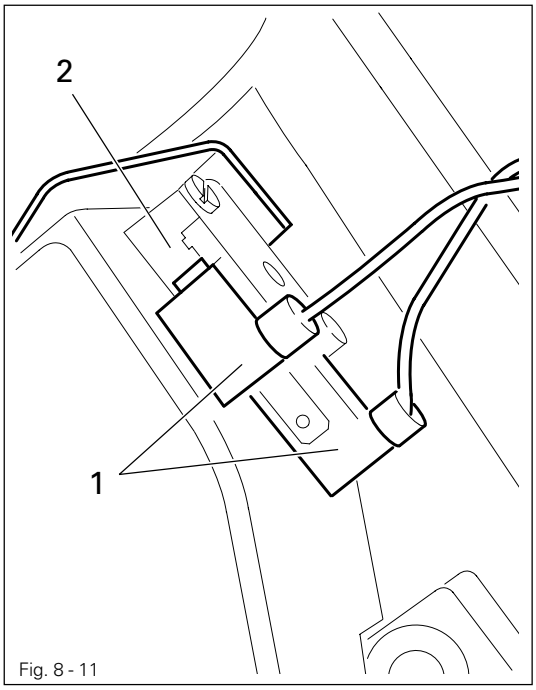

Fig. 8 - 11

- Connect plug 1 of safety switch 2 as shown in Fig. 8-11.

When the machine head is tilted back,the safety switch prevents the machine from starting when the main switch is on.

8.02.08 Checking the function of the start inhibitor

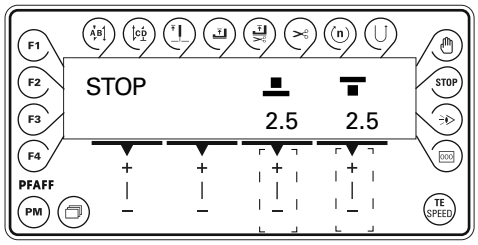

- Switch the machine on at the main switch and tilt back the sewing head.
  The error message "STOP" must appear on the control panel.
- If the message does not appear, check the setting of switch 2.
- After the sewing head has been set upright, the machine is ready for operation again.

8.03 Tilted work base

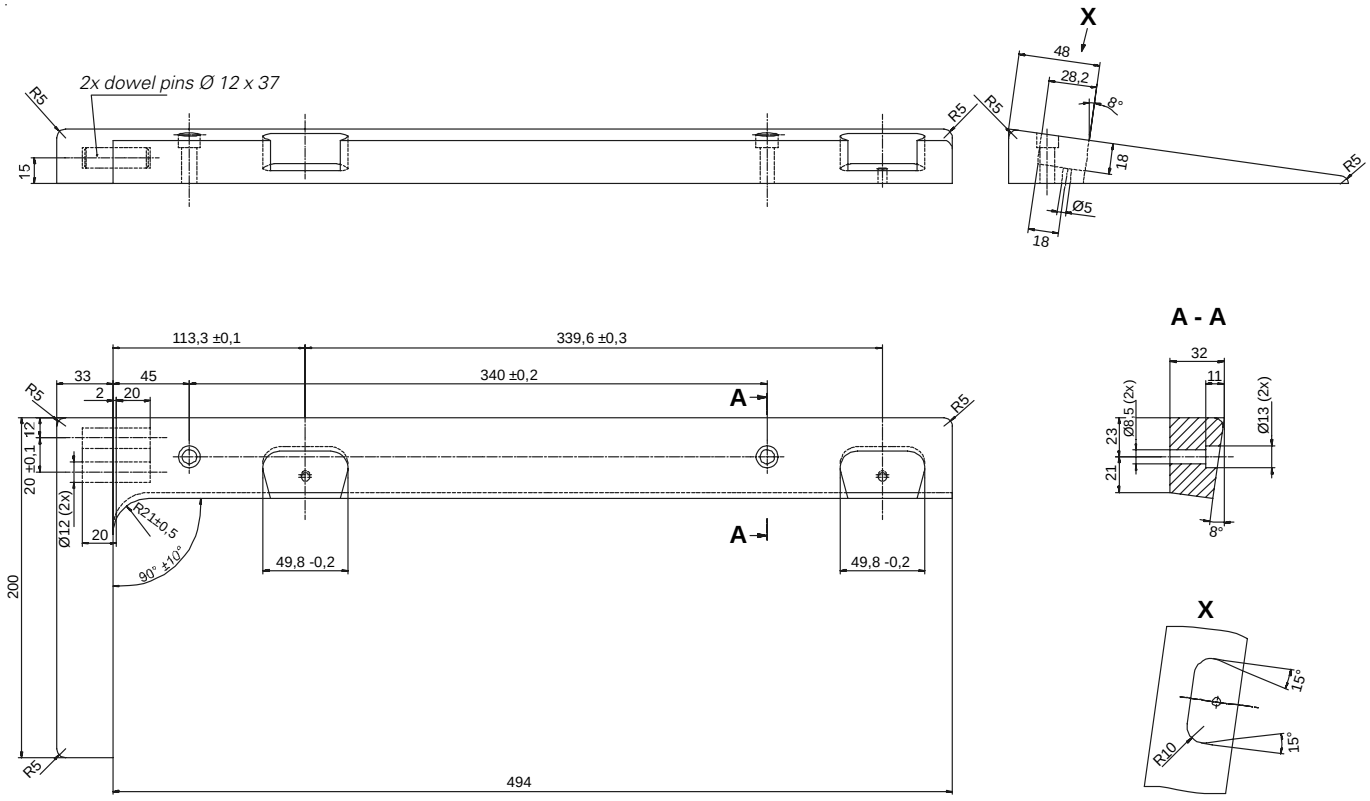

8.04 Table top cutout

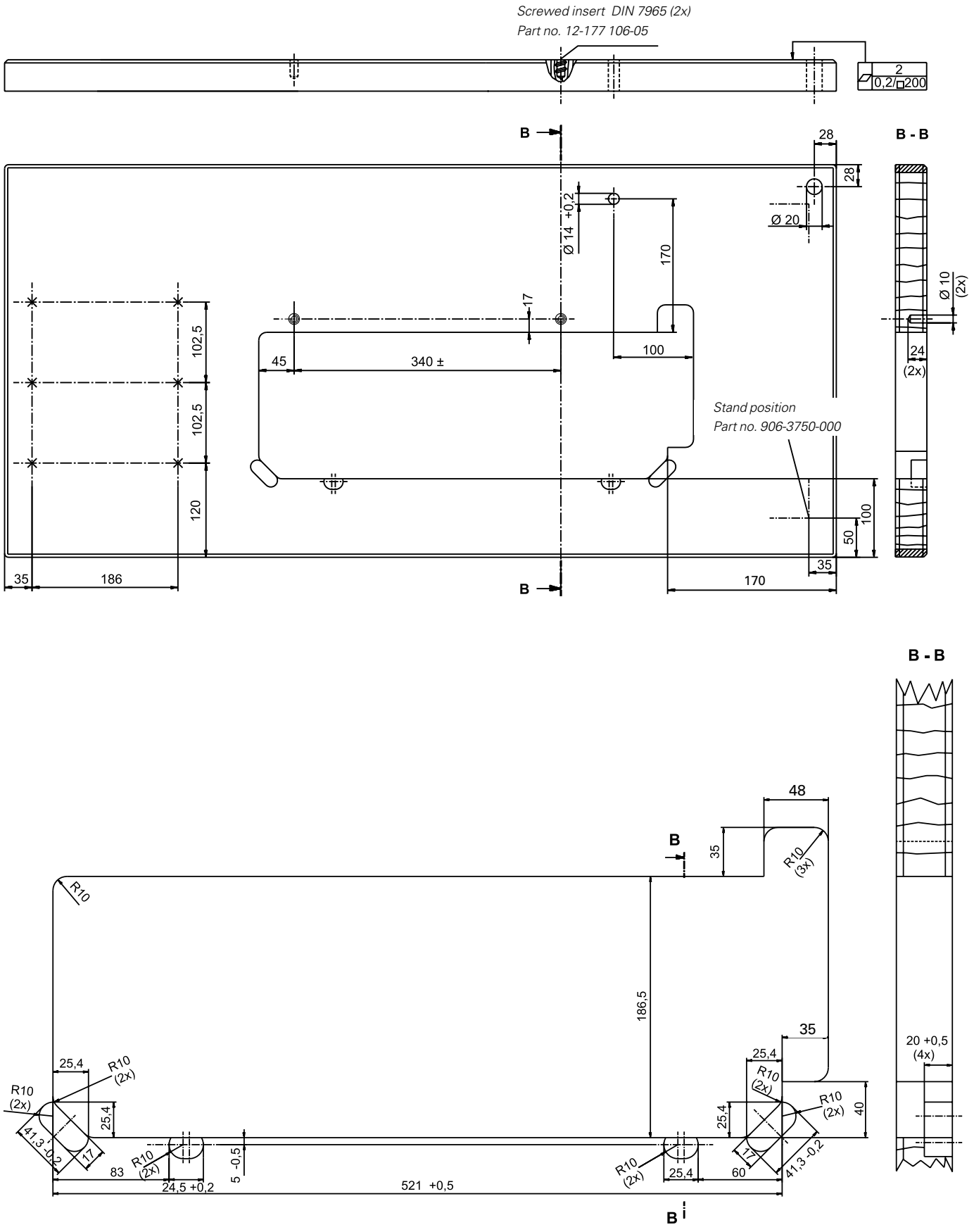

8.05 Fitting the reel stand

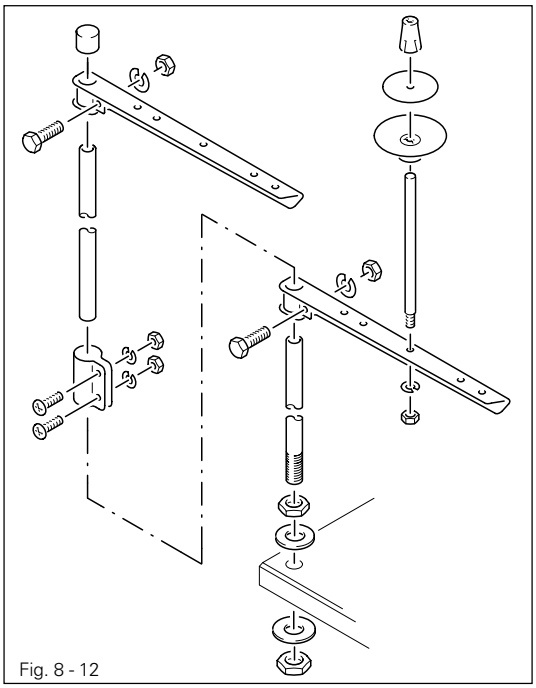

Fig. 8 - 12

- Fit the reel stand as shown in **Fig. 8-12**
- Afterwards insert the stand in the hole in the table top and secure it with the nuts provided.

8.06 Commissioning

- Check the machine, particularly the electrical wiring, for any damage.
- Clean the machine thoroughly and then oil it or fill in oil (see **Chapter 12 Care and maintenance**).
- Have a mechanic check whether the motor of the machine can be operated with the available power supply, and that the motor is correctly connected in the junction box. If there are any discrepancies the machine **must not be operated under any circumstances.**

8.07 Switching the machine on/off

- Switch the machine on or off (see **Chapter 7.01 On/off switch**).

9 Setting up

All instructions and regulations in this instruction manual must be observed. Special attention must be paid to all safety regulations!

All setting-up work must only be carried out by personnel with the appropriate training. For all setting-up work the machine must be disconnected from its power supply by turning off the on/off switch, or removing the plug from the electric power socket.

9.01 Inserting the needle on model PFAFF 1571 and 1591

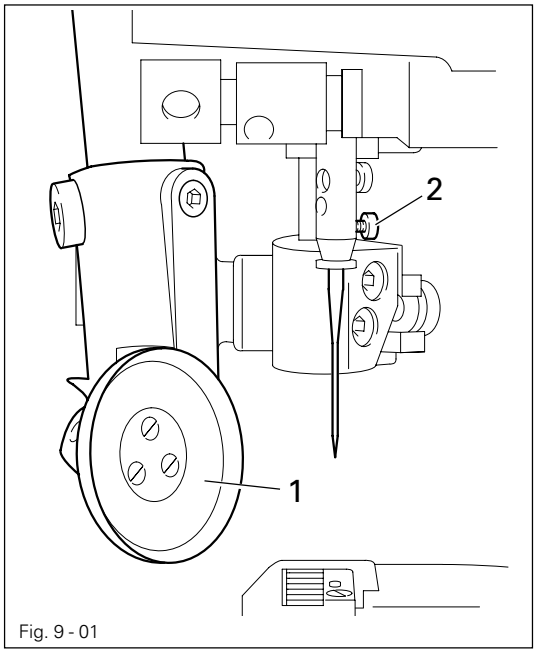

Fig. 9 - 01

Switch the machine off! Danger of injury if the machine is started accidentally!

Only use needles of system **134**.

- Raise the roller presser **1** and swing it out.
- Loosen screw **2** and insert the needle as far as possible. The long groove must face to the right on model 1571 and to the left on model 1591.
- Tighten screw **2** and swing roller presser **1** back into position.

9.02 Inserting the needle on model 1574

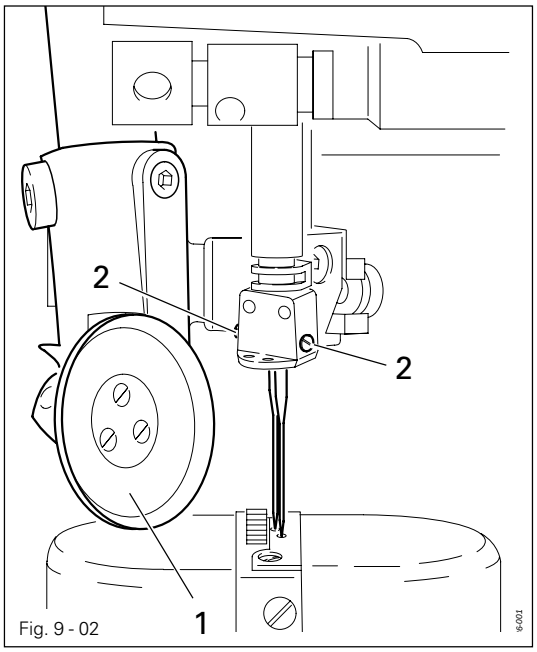

Fig. 9 - 02

Switch the machine off! Danger of injury if the machine is started accidentally!

Only use needles of system **134-35**.

- Raise the roller presser **1** and swing it out.
- Loosen screws **2** and insert the needles so that the long groove of the left needle is facing right, and that of the right needle is facing left.
- Tighten screws **2** and swing roller presser **1** back into position.

9.03 Winding the bobbin thread; adjusting the primary thread tension

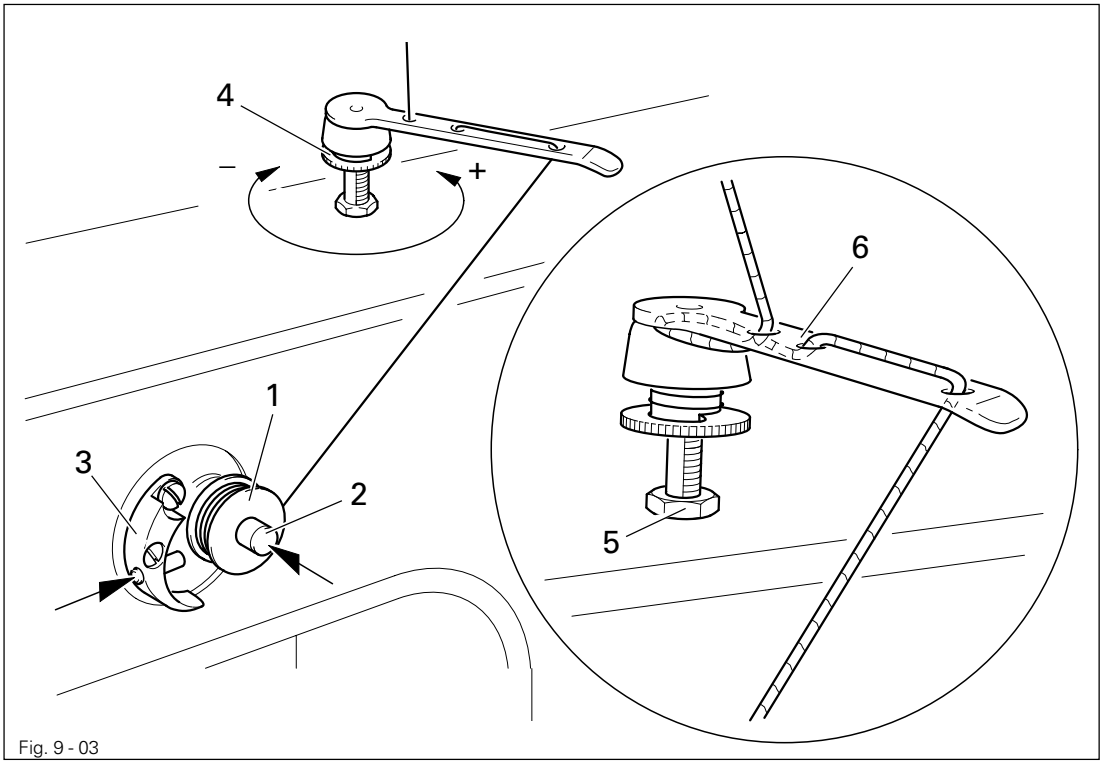

Fig. 9 - 03

- Place an empty bobbin **1** onto bobbin winder spindle **2**.
- Thread the bobbin as shown in **Fig. 9 - 03** and wind it clockwise around bobbin **1** a few times.
- Switch on the bobbin winder while at the same time pressing bobbin winder spindle **2** and lever **3**.

The bobbin is filled up during sewing.

- The thread tension on bobbin **1** can be adjusted using knurled screw **4**.
- The bobbin winder stops automatically when bobbin **1** is full.

If the thread is wound unevenly:

- Loosen nut **5**.
- Turn thread guide **6** accordingly.
- Tighten nut **5**.

9.04 Removing/Inserting the bobbin case

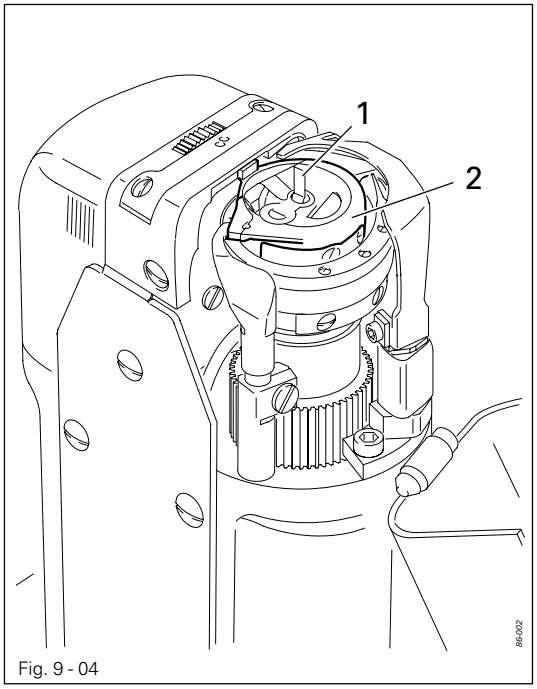

Fig. 9 - 04

Switch the machine off!
Danger of injury if the machine is started accidentally!

Removing the bobbin case:
- Open the post cap.
- Raise latch **1** and remove bobbin case **2**.

Inserting the bobbin case:
- Insert bobbin case **2**.
- Close the latch and close the post cap.

1574 is shown in **Fig. 9 - 04**.

9.05 Threading the bobbin case/Adjusting the bobbin thread tension

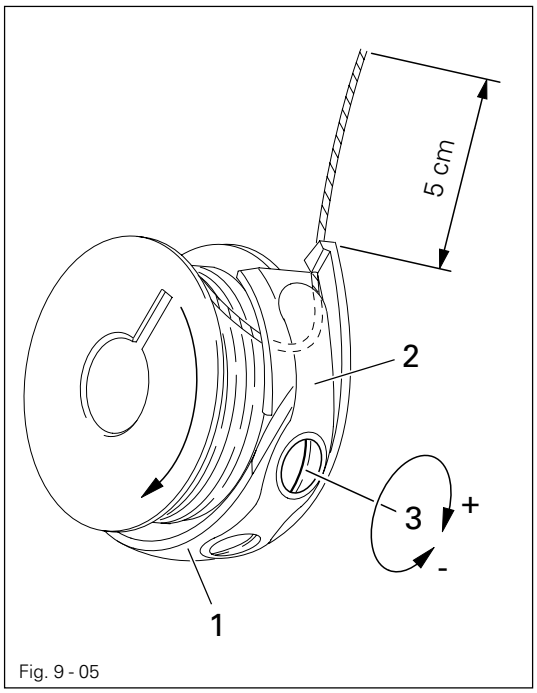

Fig. 9 - 05

- Insert the bobbin into the bobbin case **1**.
- Pass the thread through the slot under spring **2**.
- Pass the thread through the notch.
- Adjust the thread tension by turning screw **3**.

When the thread is pulled, the bobbin must rotate in the direction of the arrow.

9.06 Threading the needle thread and regulating its tension on model 1571 and 1591

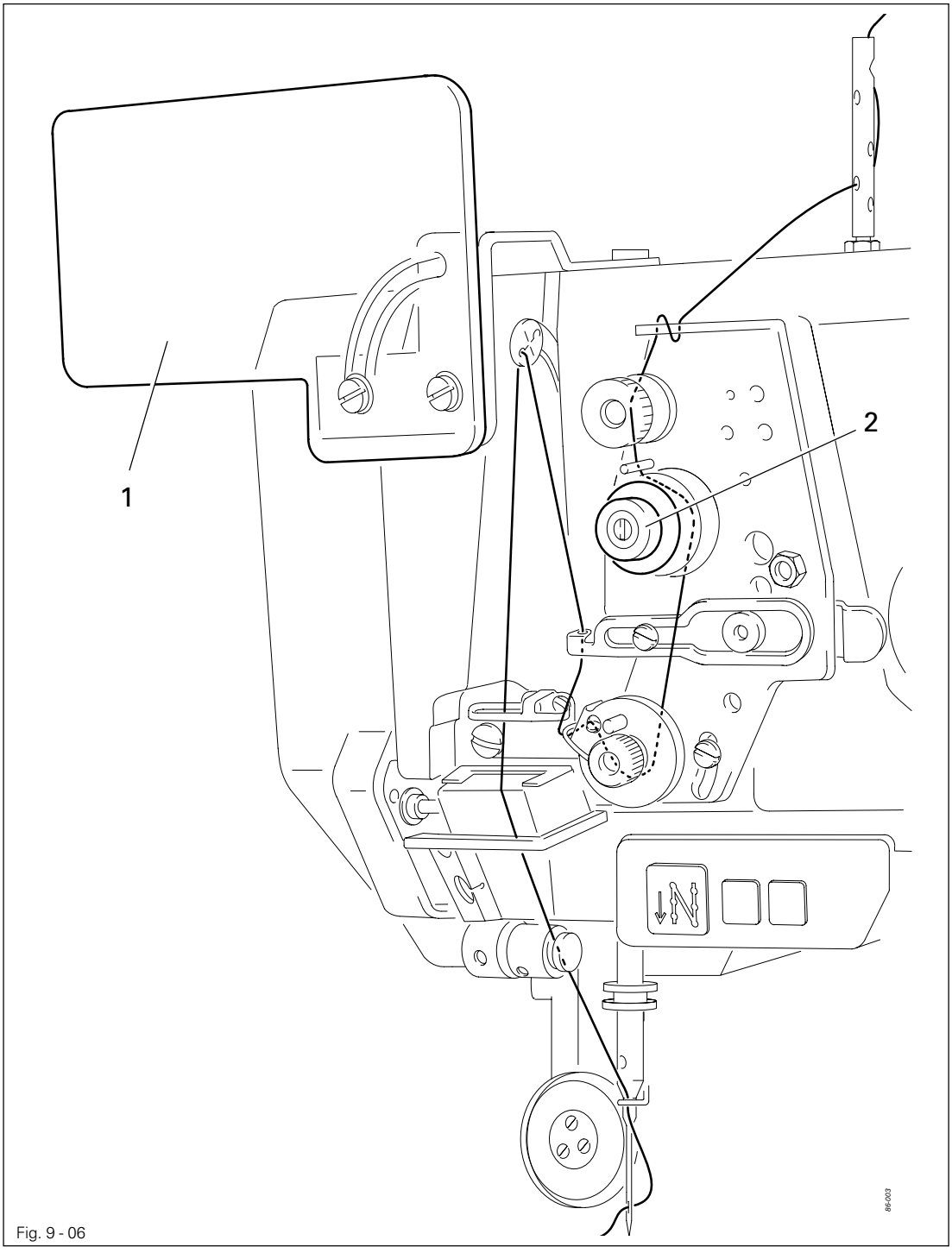

Fig. 9 - 06



Switch the machine off!
Danger of injury if the machine is started accidentally!
eye guard 1.

- Thread the needle thread as shown in **Fig. 9-06**.
- On model 1571 the needle is threaded from the right to the left, and on model 1591 from the left to the right.
- Adjust the needle thread tension by turning milled screw **2**.

9.07 Threading the needle thread and regulating its tension on model 1574

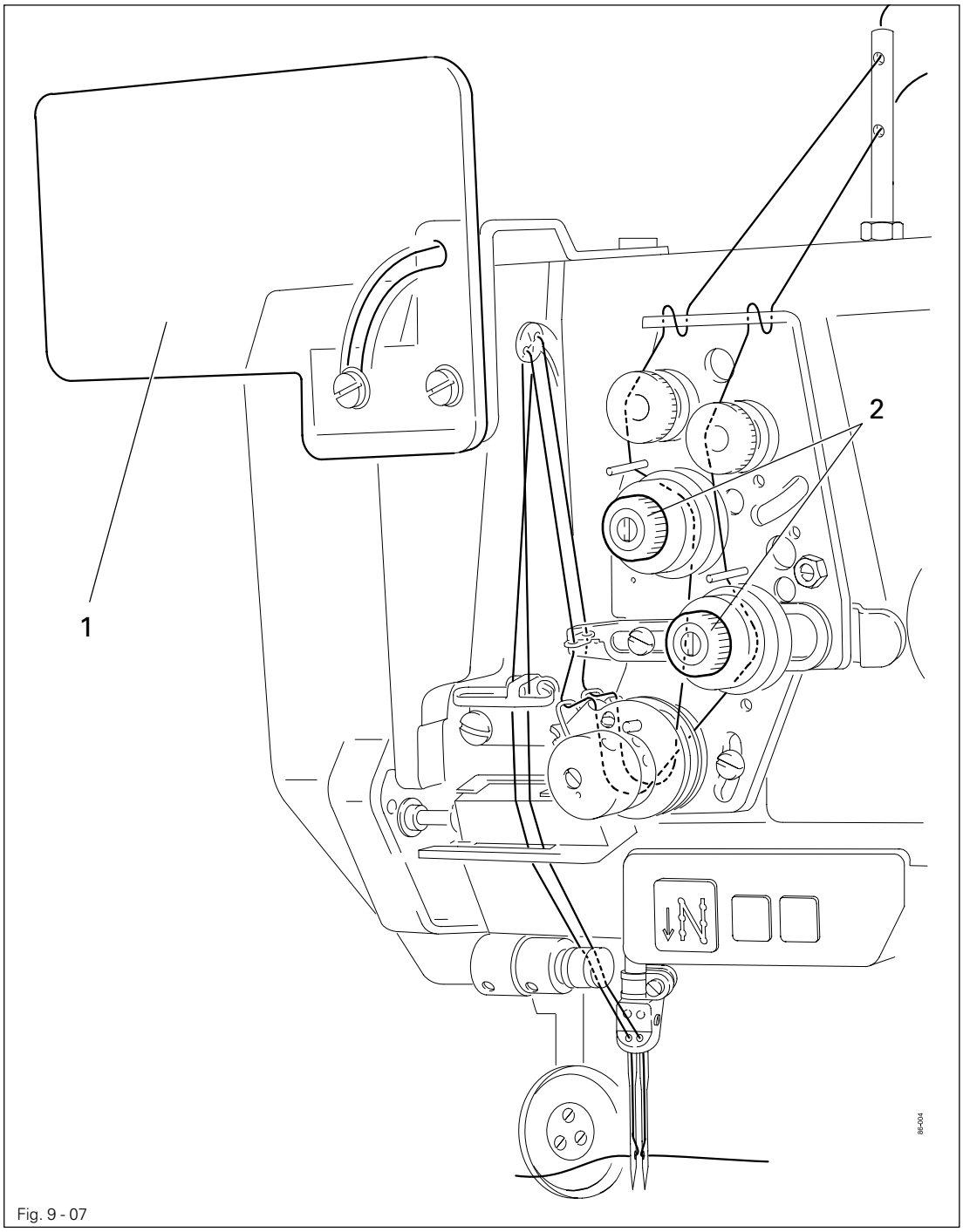

Fig. 9 - 07

Switch the machine off!
Danger of injury if the machine is started accidentally!

- Tilt up the eye guard **1**.
- Thread both needle threads as shown in **Fig. 9-07**.
- The left needle is threaded from the right to the left, and the right needle from the left to the right.
- Adjust the needle thread tensions by turning milled screws **2**.

9.08 Entering the stitch length

The stitch length is set by adjusting the feed strokes of the roller presser and the feed wheel. For the application of fullness, the feed stroke of the roller presser must be larger or smaller than the feed stroke of the feed wheel.

9.08.01 Entering the standard stitch length

- Switch on the machine.
  After the machine has been switched on the current values of the stitch lengths for roller presser and feed wheel are displayed.

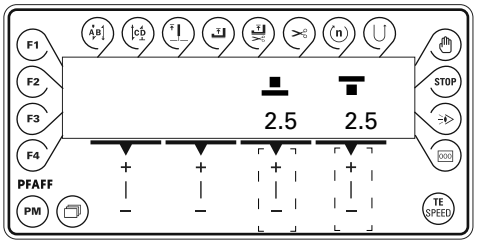

- Adjust the stitch length (feed stroke) for the roller presser by pressing the corresponding +/- key.

- Adjust the stitch length (feed stroke) for the feed wheel by pressing the corresponding +/- key.

9.08.02 Entering a second stitch length or amount of fullness

With the use of the **PM** key, a second stitch length or fullness setting can be set in addition to the standard stitch length. By operating the knee switch it is possible to switch from one setting to the other in the programmed sewing mode (**Text "PM" on display**).

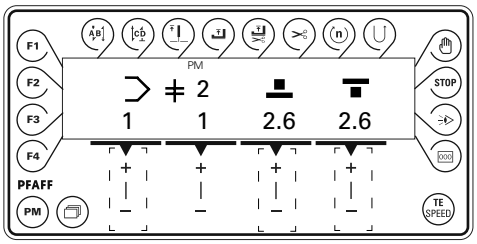

- Switch on the machine.

- Press the **PM** key to move into the programmed sewing mode.

- Select the program number (1 or 2) by pressing the corresponding +/- key.

- Sew 1 – 2 stitches and operate the knee switch, also see **Chapter 7.05 Knee switch**.

- Set the stitch length (feed stroke) for the roller presser by pressing the corresponding +/- key.

- Set the stitch length (feed stroke) for the feed wheel by pressing the corresponding +/- key.

9.09 Entering the start and end backtacks

- Switch on the machine.

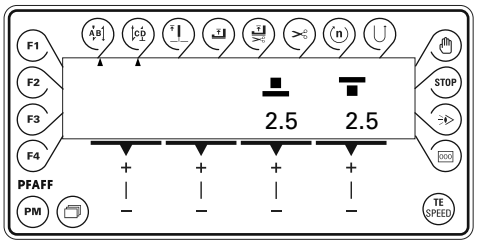

- Switch on the relevant function by pressing the **Start backtack** and/or **End backtack** keys. (Arrow appears under the corresponding function key)

- By pressing the **Scroll key** switch to the input menu for the start and end backtacks.

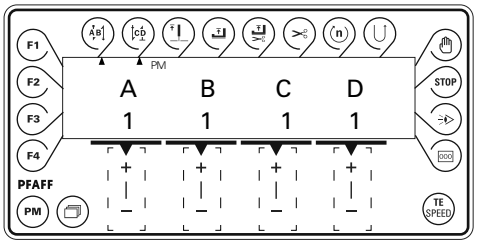

A
- By pressing the corresponding **+/- key** select the desired value for the number of forward stitches (A) of the start backtack.

B
- By pressing the corresponding **+/- key** select the desired value for the number of reverse stitches (B) of the start backtack.

C
- By pressing the corresponding **+/- key** select the desired value for the number of reverse stitches (C) of the end backtack.

D
- By pressing the corresponding **+/- key** select the desired value for the number of forward stitches (D) of the end backtack.

- Switch back to the stitch length input menu by pressing the **Scroll** key.

9.10 Entering/changing the code number

- Switch on the machine.

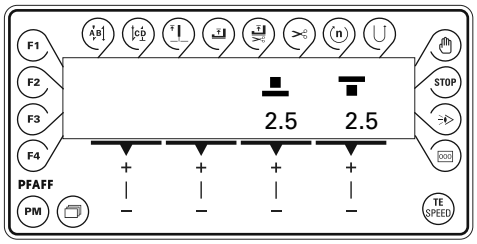

2 x TE SPEED

- Select the input mode by pressing the **TE/Speed** key twice.

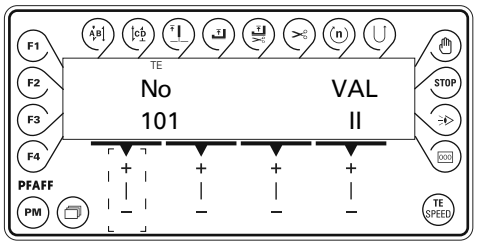

No

- By pressing the corresponding **+/- key** select the parameter group "800".

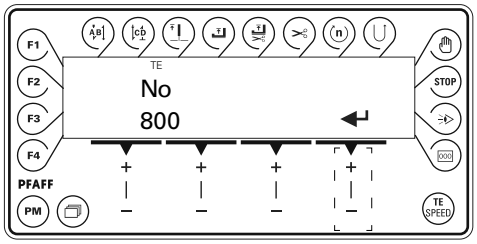

↵

- Confirm the selection by pressing the corresponding **+/- key**.

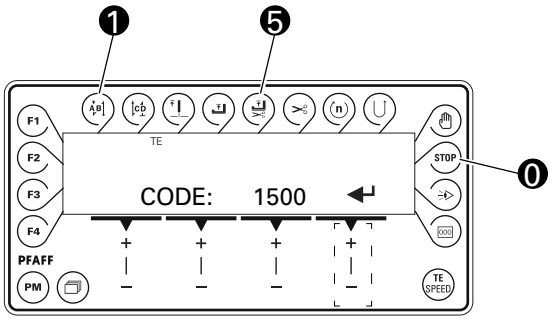

- Enter the code number by pressing the corresponding keys (factory code setting is "1500"), also see **Chapter 7.12.02 Key functions**.

↵

- Conclude code input by pressing the corresponding **+/- key**.

The code input is stored until the machine is switched off at the main switch. As long as the machine is not switched off, there is free access to all parameters without having to enter the code number again.

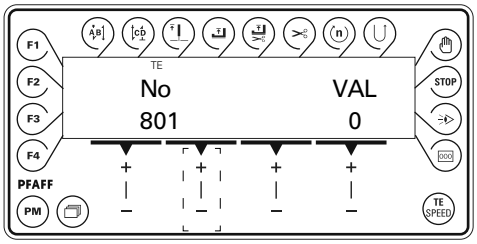

No ● By pressing the corresponding +/- key select the parameter "810".

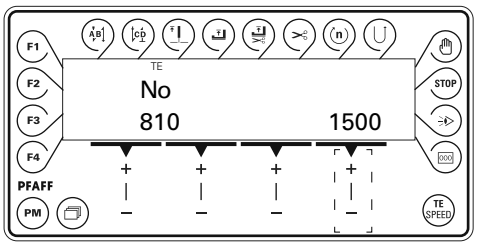

↵ ● Confirm the selection by pressing the corresponding +/- key.

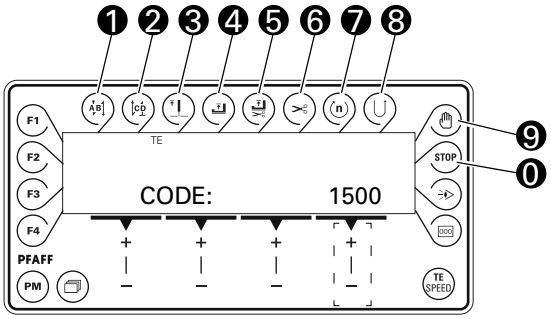

● Enter the desired code by pressing the corresponding keys, also see Chapter 7.09.02 Key functions.

↵ ● Conclude the input by pressing the corresponding +/- key, through which the new code number is stored and the sewing mode selected.

9.11 Setting the stitch count function for bobbin thread control

- Switch on the machine.

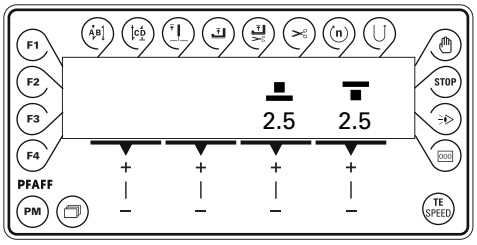

2 x TE SPEED

- Select the input mode by pressing the **TE/Speed** key twice.

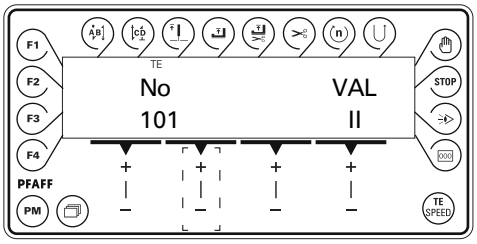

No

- By pressing the corresponding **+/- key** select the parameter "105".

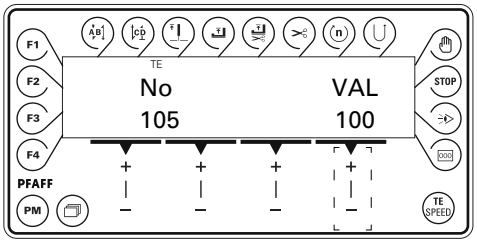

VAL

- Set the number of stitches to be sewn with one bobbin by pressing the corresponding **+/- keys.**

TE SPEED

- Conclude the input by pressing the **TE/Speed** key. The value entered is then stored and the sewing mode selected.

To activate the stitch count function the value of parameter "104" must be set at "1".

10 Sewing

In the sewing mode all settings relating to the sewing operation are shown on the display. Functions can be switched on and off by pressing a key. Values for start backtacks and end backtacks or stitch placement can be changed directly.
In this mode a difference is made between manual sewing and programmed sewing.
The change from manual to programmed sewing is effected by pressed the PM key. In programmed sewing the text "PM" appears on the display. Under the program numbers 1 – 2, fixed programs are deposited, which are programmed in the machine memory. The program numbers 3 – 99 can be used for free programming of seams.

10.01 Manual sewing

After the machine has been switched on (Chapter 7.01 Main switch) and manual sewing has been selected with the PM key, the display appears for entering the stitch length, also see Chapter 9.08 Entering the stitch length.

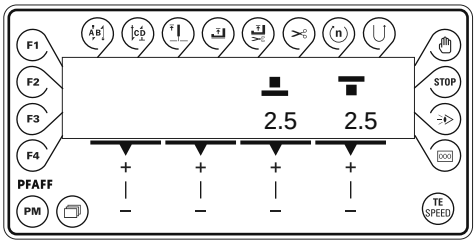

When the bartacking function is switched on, the display appears for entering the bartack values, also see Chapter 9.09 Entering the start and end backtacks.
It is possible to switch from one display to another by pressing the Scroll key.

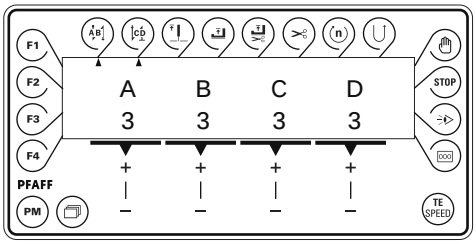

Other manual sewing functions, also see Chapter 7.12.02 Function keys:

F1	Stitch placement function on/off		Raised needle position on/off
F4	Backtack suppression		Raised roller presser on/off
	Start backtack on/off		Raised roller presser after thread trimming on/off
	End backtack on/off		Thread trimming on/off

Sewing ensues with pedal functions, see Chapter 7.04 Pedal.

10.02 Programmed sewing

In the programmed sewing mode a difference is made between fixed programs (program numbers 1 and 2) and freely programmable seam programs (program numbers 3-99). The fixed programs are used for the quick and easy production of seams with different stitch lengths or amounts of fullness. With the knee switch function it is possible to move to each of the 2 or 3 seams sections, also see Chapter 7.05 Knee switch. The fixed programs are designed as cyclic running programs and are terminated with the pedal function, also see Chapter 7.04 Pedal.

The freely programmable seam programs (program numbers 3 – 99) can be entered, changed or deleted as required, see Chapter 11 Input.



After the machine has been switched on (Chapter 7.01 Main switch) and programmed sewing has been selected with the PM key, the display appears for selecting the program number, seam section and stitch length.

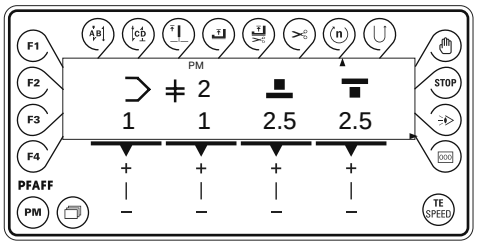



If other functions, such as backtack function, maximum seam section speed or stitch counting are activated, the Scroll key can be used to switch to other displays for entering the corresponding values, e.g. to display the value for seam section speed and stitch counting.

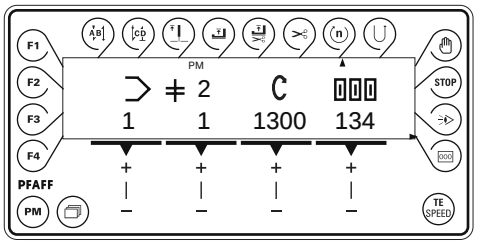

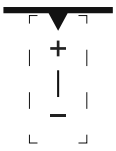

The values can be entered by pressing the corresponding +/- key.

Other programmed sewing functions, also see Chapter 7.09.02 Function keys:

F1	Stitch placement function on/off		Raised roller presser after thread trimming on/off
F3	Knee switch function on/off		Thread trimming on/off
F4	Backtack suppression	n	Seam section speed on/off
AB	Start backtack on/off		Reverse sewing direction on/off
CD	End backtack on/off		Program interruption
	Raised needle position on/off	STOP	Programmed stop on/off
	Raised roller presser on/off		Sensor on/off
		000	Stitch counting on/off

Sewing ensues with pedal functions, see Chapter 7.04 Pedal.

10.03 Program interruption

If a seam program sequence is interrupted (e.g. due to thread breakage), the program interruption function must be selected.

- After the program interruption key has been pressed, the seam program sequence is interrupted. It is possible to continue sewing manually, in which case the stitch length values are taken over from the current seam program.

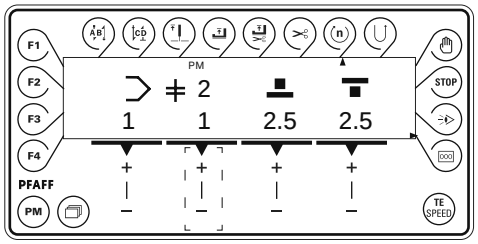

- With the corresponding +/- key it is possible to select the seam section, in which the seam program is to be continued.

- By pressing the program interruption key again, the program enters the selected seam section and the programmed sewing is continued.

10.04 Error messages

If an error occurs, the text "ERROR" appears on the display, together with an error code and short instructions. An error message is caused by incorrect settings, defective elements or seam programs and by overload conditions. For an explanation of the error codes see Chapter 13.09 Explanation of the error messages.

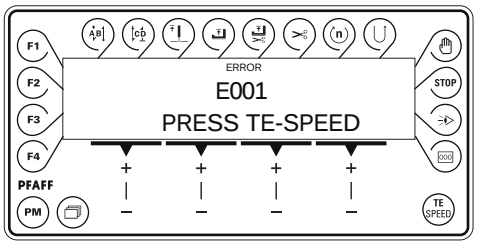

- Eliminate the error.
- Confirm error elimination by pressing the TE/Speed key.



11 Input

11.01 Summary of the functions in the input mode

2x TE SPEED The input mode is selected by pressing the TE/Speed key twice. In the input mode a difference is made between parameter input and seam program input.

PM After selecting the input mode, use the PM key to move into the seam program input.

11.01.01 Summary of the parameter functions

2x TE SPEED

+ / – Select the parameter group (corresponding +/- key)

- 100 Operator level
- 200 Technician level
- 300 Sewing motor positions
- 400 Times
- 500 Counters and speeds
- 600 Service
- 700 Sewing motor
- 800 Rights of access

PM Selecting the seam program input, see Chapter 11.01.02 Summary of the seam program inputs

For a more detailed explanation of the parameter functions, see Chapter 13.08 Parameter settings.

11.01.02 Summary of the seam program inputs

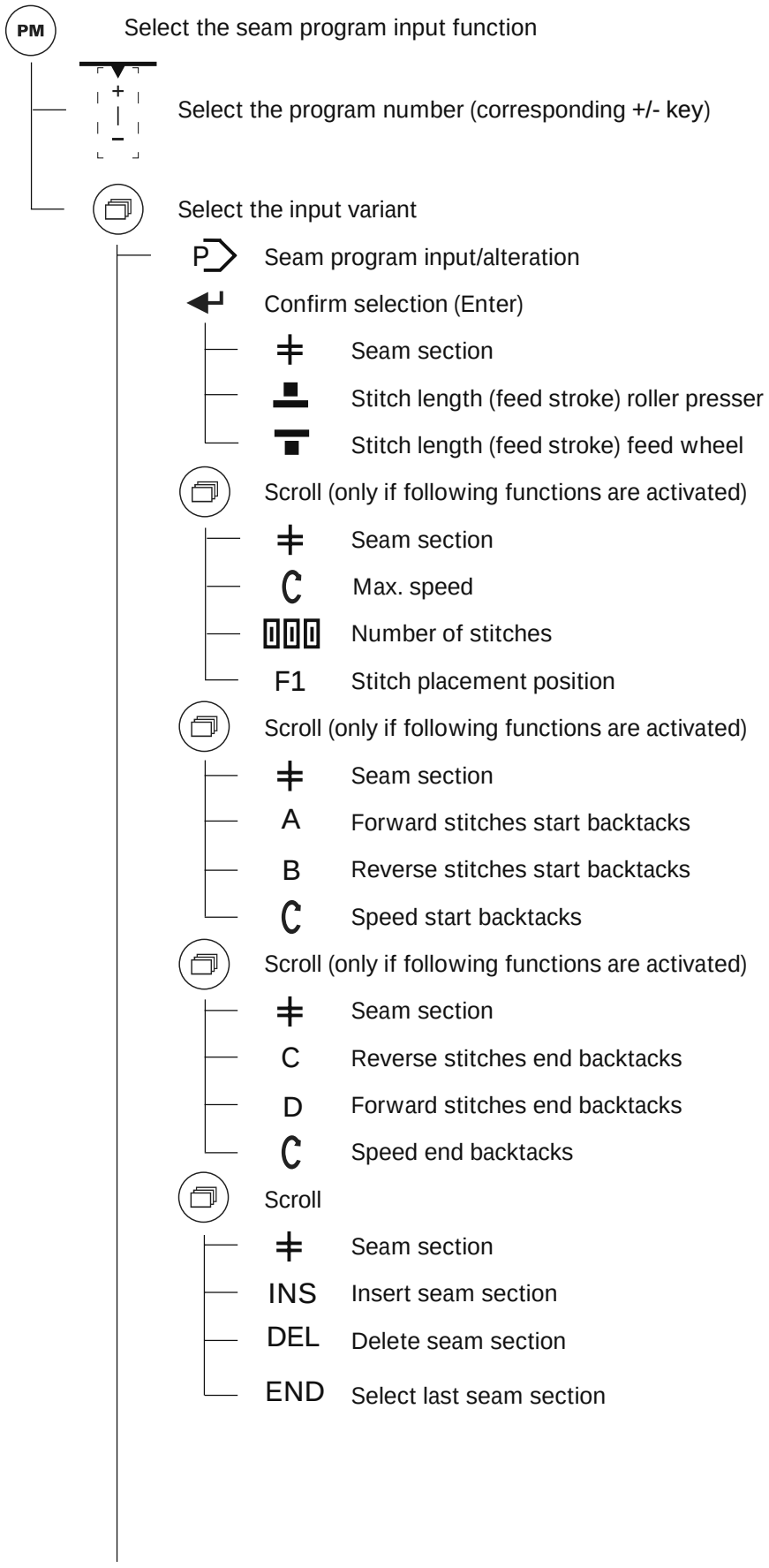

- Select the input variant
  - T — Seam input with Teach In
  - ↵ — Confirm selection (Enter)
    - Seam section
    - Stitch length (feed stroke) roller presser
    - Stitch length (feed stroke) feed wheel
  - Scroll (only if following functions are activated)
    - Seam section
    - C — Max. speed
    - F1 — Stitch placement position
  - Scroll (only if following functions are activated)
    - Seam section
    - A — Forward stitches start backtacks
    - B — Reverse stitches start backtacks
    - C — Speed start backtacks
  - Scroll (only if following functions are activated)
    - Seam section
    - C — Reverse stitches end backtacks
    - D — Forward stitches end backtacks
    - C — Speed end backtacks
  - After operating the pedal
    - Seam section
    - Number of stitches sewn
    - END — Select last seam section
- Select input variant
  - DEL — Delete seam programs

For the explanation of other functions see Chapter 7.12.02 Function keys.

11.02 Seam program input variants

To enter, change or delete seam programs there are basically three possible input variants

- Seam program input/alteration (input of values),
- Seam input with Teach In and
- Deleting seam programs.

The required input variant is selected as follows:

- Switch on the machine

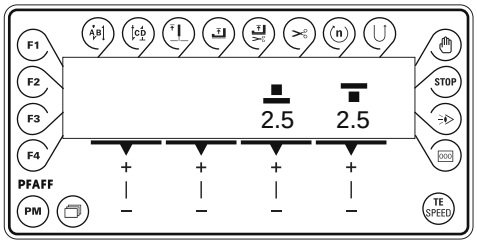

2x TE SPEED

- Select input mode by pressing TE/Speed key twice.

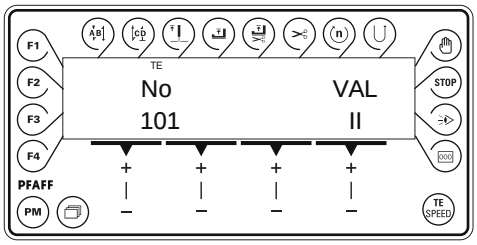

PM

- Press PM to select the seam program input function.
- Enter the code number, see Chapter 9.10 Entering/changing the code number.

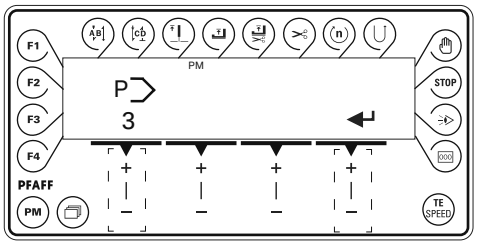

- Select the required program number with the corresponding +/- key.

- Select the required input variant with the Scroll key.

- Confirm the selection made with the corresponding +/- key.

TE SPEED

- Carry out the desired inputs and then conclude the seam program input by pressing the TE/speed key.

11.03 Altering existing seam programs

The following description assumes that a seam program with all the necessary parameters has already been created.

- Switch on the machine.
- Select the input variant "seam program input/alteration", see Chapter 11.02 Seam program input variants.

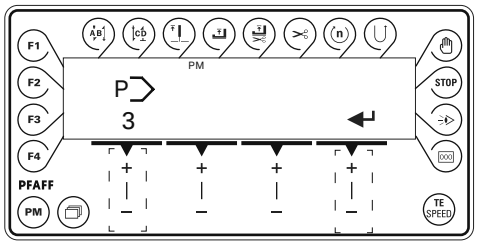

- Select the desired program number with the corresponding +/- key.

- After confirming the selection by pressing the corresponding +/- key, the first of up to five input menus appears, in which the parameters of the selected program can be altered as described below.

Each of the five input menus can be selected individually by pressing the Scroll key. Only the input menus of activated functions are displayed. To return to the program selection menu, press the PM key.

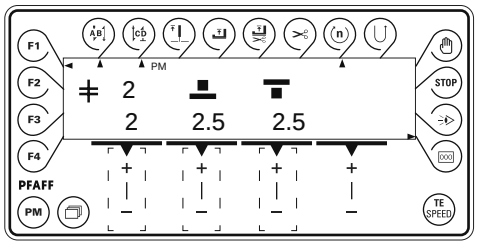

- Select the desired seam section by pressing the corresponding +/- key.

- Select the desired value for the stitch length of the roller presser by pressing the corresponding +/- key.

- Select the desired value for the stitch length of the feed wheel by pressing the corresponding +/- key.

- Press the Scroll key to select the next input menu.

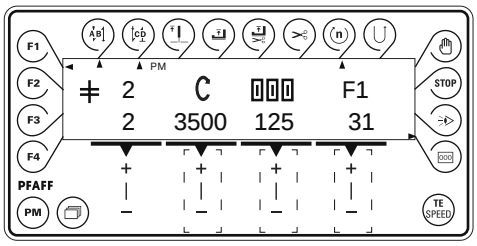

To achieve the illustrated input menu, the following functions must be activated:

F1 F1 (Placement stitch) – and/or

n Speed (speed limitation) – and/or

000 Stitch count.

C ● Select the desired speed value for the current seam section by pressing the corresponding +/- key.

000 ● Select the desired speed value for the number of stitches in the current seam section by pressing the corresponding +/- key.

F1 ● Set the stitch placement position by turning the balance wheel or by pressing the corresponding +/- key.

● Select the next input menu by pressing the Scroll key.

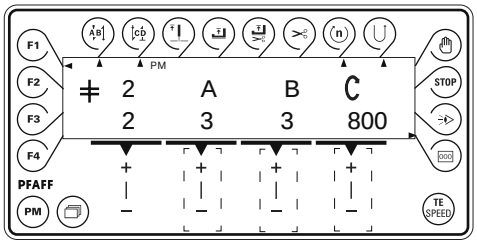

AB This input menu can only be selected if the start backtack function is activated.

A ● By pressing the corresponding +/- key select the desired value for the number of forward stitches (A) of the start backtack for the current seam section.

B ● By pressing the corresponding +/- key select the desired value for the number of reverse stitches (B) of the start backtack for the current seam section.

C ● By pressing the corresponding +/- key select the desired value for the start backtack speed of the current seam section. In parameter 101 it is possible to stipulate whether the start backtack is sewn with a fixed speed or dependent on the pedal.

● Select the next input menu by pressing the Scroll key.

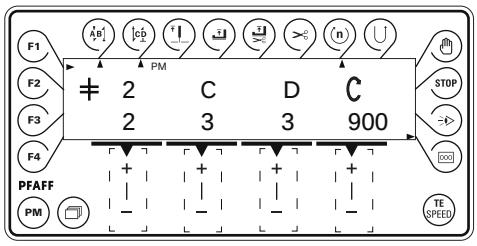

This input menu can only be selected if the end backtack function is activated.

C
- By pressing the corresponding +/- key select the desired value for the number of reverse stitches (C) of the end backtack for the current seam section.

D
- By pressing the corresponding +/- key select the desired value for the number of forward stitches (D) of the end backtack for the current seam section.

C
- By pressing the corresponding +/- key select the desired value for the end backtack speed of the current seam section.

- Select the next input menu by pressing the Scroll key.

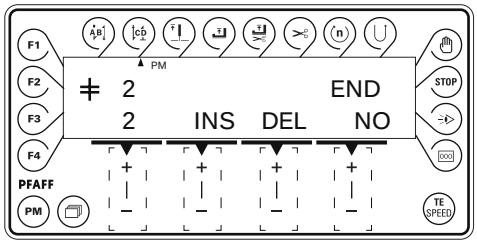

INS
- By pressing the corresponding +/- key a new seam section is inserted.

DEL
- By pressing the corresponding +/- key the current seam section is deleted.

END
- By pressing the corresponding +/- key it is possible to stipulate whether the selected seam section is the last one in the program ("YES") or whether another seam section should be added ("NO").

- By pressing the Scroll key, the first input menu is selected again
or
change to programmed sewing by pressing the TE/Speed key. In this case the values entered are stored.

11.04 Deleting seam programs

- Switch on the machine

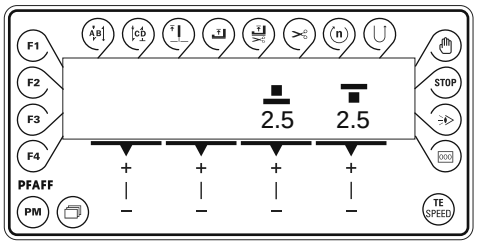

2x TE SPEED

- Select input mode by pressing TE/Speed key twice.

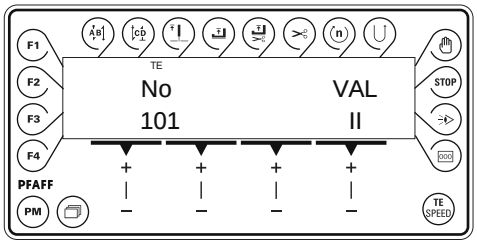

PM

- Press PM to select the seam program input function.
- Enter the code number, see Chapter 9.10 Entering/changing the code number.

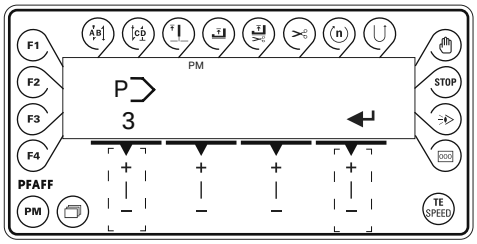

- Select the required program number with the corresponding +/- key.

- Select the input variant "Deleting seam programs" with the Scroll key, see Chapter 11.02 Seam program input variants.

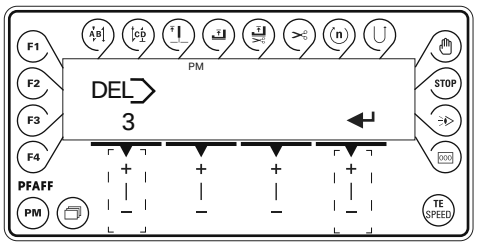

- Confirm the deletion of the program with the corresponding +/- key.

TE SPEED

- Conclude the seam program input by pressing the TE/speed key.

11.05 Seam programming examples

The procedure for creating seam programs using the seam program input function and the Teach In function is described below with the help of examples.

The display settings shown in the examples only appear like this if no seam program has been entered under the selected program number.

11.05.01 An example for seam program input

The seam to be programmed should
- have 5 seam sections
- be stored under program number 7.

- Switch on the machine

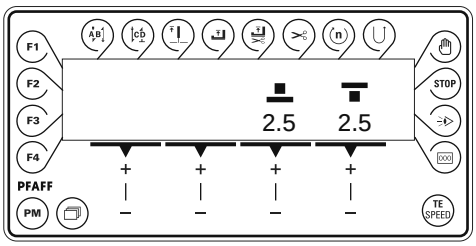

2x TE SPEED
- Select input mode by pressing TE/Speed key twice.

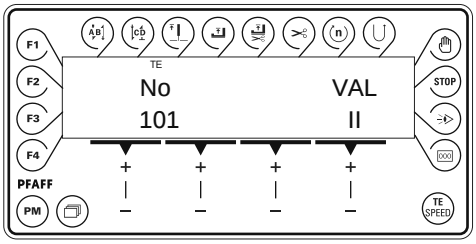

PM
- Press PM to select the seam program input function.
- Enter the code number, see Chapter 9.10 Entering/changing the code number.

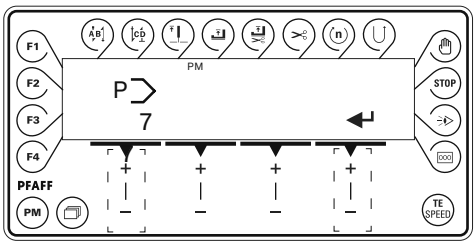

- Select the program number "7" with the corresponding +/- key.

- Confirm the selection made with the corresponding +/- key.
- The display changes for the input of the first seam section.

The first seam section should have
- a double start backtack (2 forward and 2 reverse stitches)
- backtack speed of 700 spm
- stitch count (5 stitches)
- a 3.5 mm stitch length (for roller presser and feed wheel).

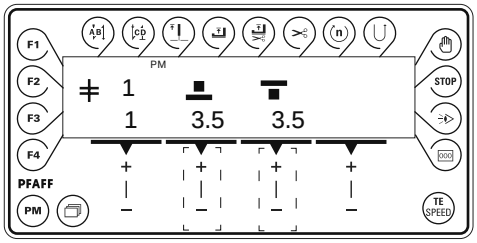

- By pressing the corresponding +/- key set the stitch length for the roller presser at "3.5".

- By pressing the corresponding +/- key set the stitch length for the feed wheel at "3.5".

- By pressing the start backtack key, switch on the corresponding function.
  The display changes for the input of the start backtack values.

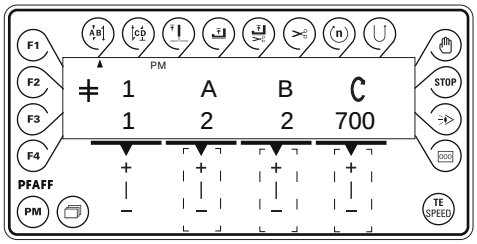

A
- By pressing the corresponding +/- key set the number of forward stitches at "2 ".

B
- By pressing the corresponding +/- key set the number of reverse stitches at "2 ".

C
- By pressing the corresponding +/- key set the backtack speed at "700".

- By pressing the stitch count key, switch on the corresponding function.
  The display changes for the input of the number of stitches.
- If the stitch count function is already switched on, change by pressing the Scroll key.

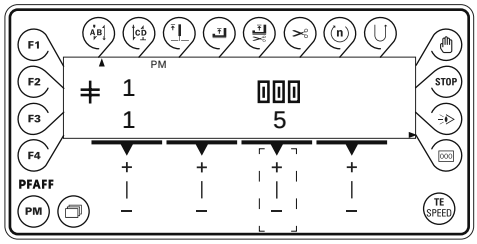

- By pressing the corresponding +/- key set the number of stitches at"5".

● By pressing the Scroll key, select the following display on the screen.

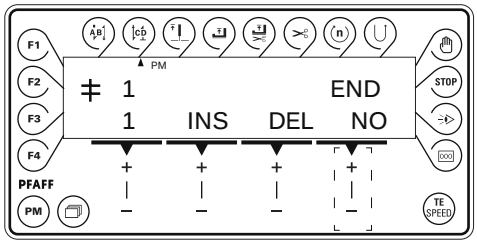

END ● By pressing the corresponding +/- key select "NO" to add further seam sections.

● By pressing "+" on the corresponding +/- key change to the second seam section.

In the second seam section
- the stitch length (for roller presser and feed wheel) should be 2.5 mm
- and a stitch count should be carried out (1 stitch).

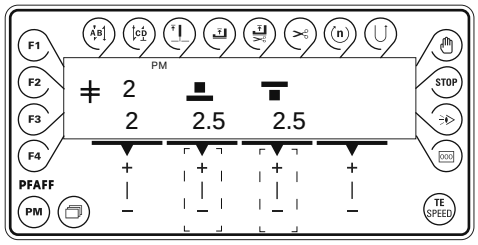

● By pressing the corresponding +/- key set the stitch length for the roller presser at "2.5 ".

● By pressing the corresponding +/- key set the stitch length for the feed wheel at "2.5".

● By pressing the stitch count key, switch on the corresponding function.
The display changes for the input of the number of stitches.

● If the stitch count function is already switched on, change by pressing the Scroll key.

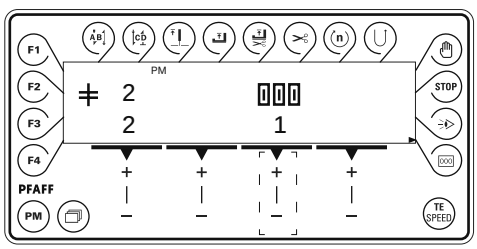

● By pressing the corresponding +/- key set the number of stitches at "1".

- By pressing "+" on the corresponding +/- key change to the third seam section.

In the third seam section
- the stitch length (for roller presser and feed wheel) should be 3 mm
- a stitch count should be carried out (2 stitches),
- and the seam should be sewn in reverse.

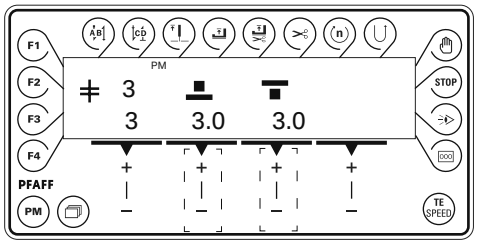

- By pressing the corresponding +/- key set the stitch length for the roller presser at "3.0 ".

- By pressing the corresponding +/- key set the stitch length for the feed wheel at "3.0".

- By pressing the stitch count key, switch on the corresponding function. The display changes for the input of the number of stitches.

- If the stitch count function is already switched on, change by pressing the Scroll key.

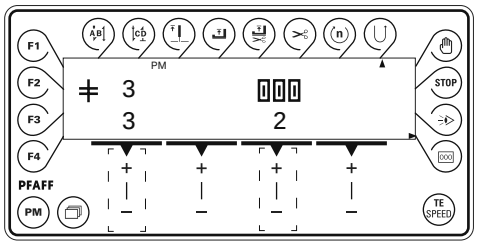

- By pressing the corresponding +/- key set the number of stitches at "2".

- By pressing the corresponding key, switch on the reverse sewing function.

- By pressing "+" on the corresponding +/- key change to the fourth seam section.

In the fourth seam section
- the stitch length (for roller presser and feed wheel) should be 5 mm
- a stitch count should be carried out (1 stitch).

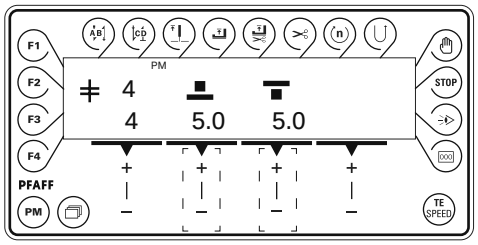

- By pressing the corresponding +/- key set the stitch length for the roller presser at "5.0 ".

- By pressing the corresponding +/- key set the stitch length for the feed wheel at "5.0".

- By pressing the stitch count key, switch on the corresponding function. The display changes for the input of the number of stitches.

- If the stitch count function is already switched on, change by pressing the Scroll key.

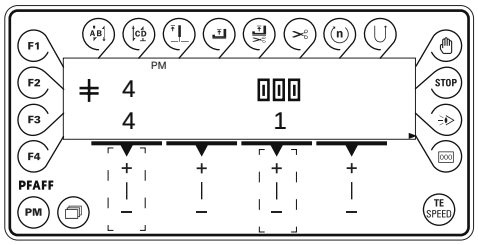

- By pressing the corresponding +/- key set the number of stitches at "1".

- - By pressing "+" on the corresponding +/- key change to the fifth seam section.

The fifth seam section should have
- a double end backtack
- a 5 mm stitch length (for roller presser and feed wheel)
- backtack speed of 700 spm
- a stitch count (1 stitch)
- and the thread trimming function at the end of the seam section.

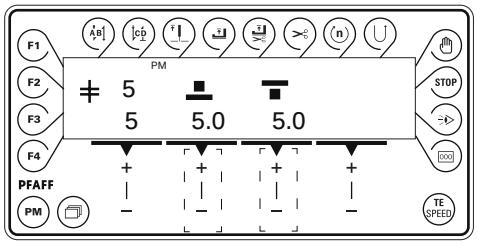

- By pressing the corresponding +/- key set the stitch length for the roller presser at "5.0 ".

- By pressing the corresponding +/- key set the stitch length for the feed wheel at "5.0".

By pressing the end backtack key, switch on the corresponding function.
The display changes for the input of the number of stitches for the end backtack

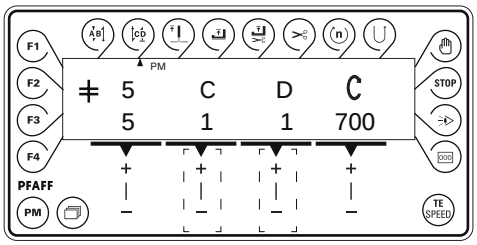

C
- By pressing the corresponding +/- key set the number of reverse stitches at "1".

D
- By pressing the corresponding +/- key set the number of forward stitches at "1".

- By pressing the corresponding +/- key set the backtack speed at "700".

- By pressing the stitch count key, switch on the corresponding function.
The display changes for the input of the number of stitches.

- If the stitch count function is already switched on, change by pressing the Scroll key.

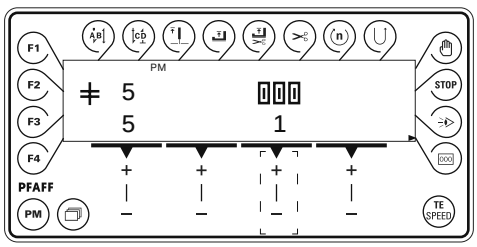



- By pressing the corresponding +/- key set the number of stitches at "1".



- By pressing the thread trimming key, switch on the corresponding function for the seam section end.



- By pressing the Scroll key, select the following screen display.

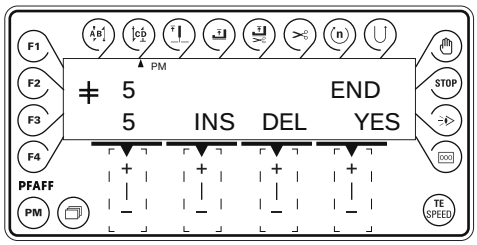

END

- By pressing the corresponding +/- key select "YES" to conclude the seam input.



- By pressing the TE/Speed key the selected values are taken over and the program changes into the programmed sewing mode.

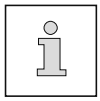

If no end of seam section function is activated, the end of the seam section can be set with the pedal function, see Chapter 7.04 Pedal.

11.05.02 Seam input example using the Teach In method

The seam to be programmed should
- have 3 seam sections
- and be stored under program number 8.

- Switch on the machine

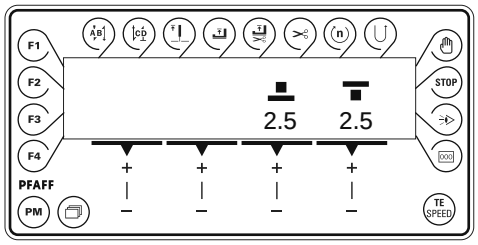

2x TE SPEED
- Select input mode by pressing TE/Speed key twice.

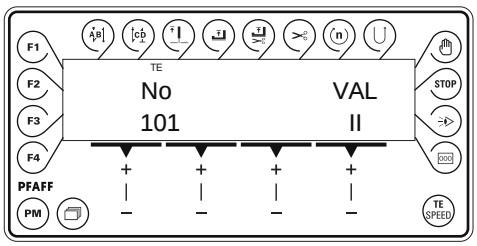

PM
- Press PM to select the seam program input function.
- Enter the code number, see Chapter 9.10 Entering/changing the code number.

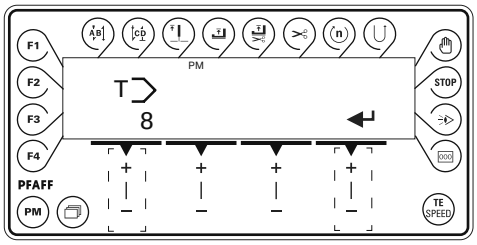

- By pressing the Scroll key, select the input variant "Seam input with Teach In", see Chapter 11.02 Seam program input variants.

- Select the program number "8" with the corresponding +/- key.

- Confirm the selection made with the corresponding +/- key.
  The display changes for the input of the first seam section.

The first seam section should have
- the knee switch function at the end of the seam section
- and a 2.8 mm stitch length (for roller presser and feed wheel).

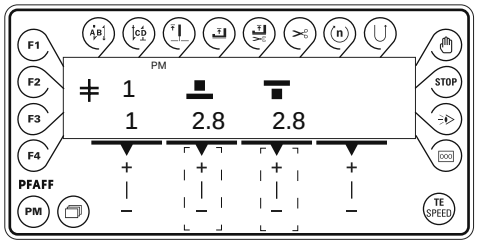

- By pressing the corresponding +/- key set the stitch length for the roller presser at "2.8 ".

- By pressing the corresponding +/- key set the stitch length for the feed wheel at "2.8".

- Sew the first seam section manually.

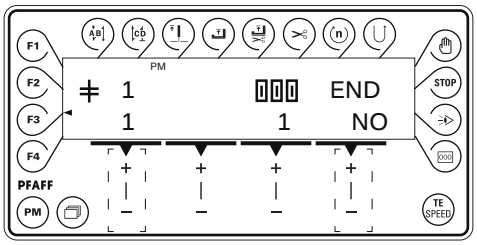

F3

- After the machine has stopped the seam section end must be entered.
  By pressing the knee switch or the F3 key, switch on the end of section with knee switch function.

END

- After sewing the section press "NO" on the corresponding +/- key, to enable the input of more seam sections.

- By pressing "+" on the corresponding +/- key change to the second seam section.

The second seam section should have
- the knee switch function at the end of the seam section
- and a 2.4 mm stitch length (for roller presser and feed wheel).

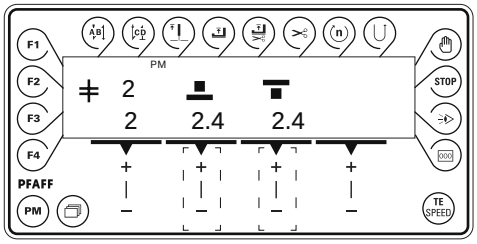

- By pressing the corresponding +/- key set the stitch length for the roller presser at "2.4 ".

- By pressing the corresponding +/- key set the stitch length for the feed wheel at "2.4".

- Sew the second seam section manually.

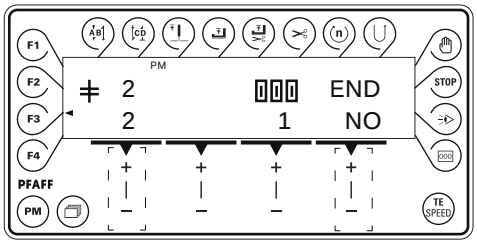

F3

- After the machine has stopped the seam section end must be entered.
  By pressing the knee switch or the F3 key, switch on the end of section with knee switch function.

- By pressing "+" on the corresponding +/- key change to the third seam section.

The third seam section should have
- the thread trimming function at the end of the seam section
- a 2.8 mm stitch length (for roller presser and feed wheel).

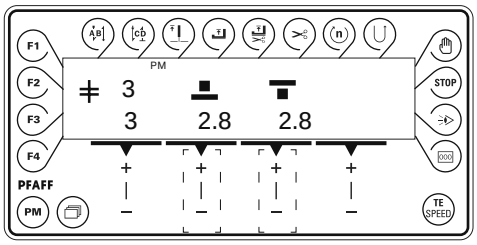

- By pressing the corresponding +/- key set the stitch length for the roller presser at "2.8 ".

- By pressing the corresponding +/- key set the stitch length for the feed wheel at "2.8".

- Sew the third seam section manually.

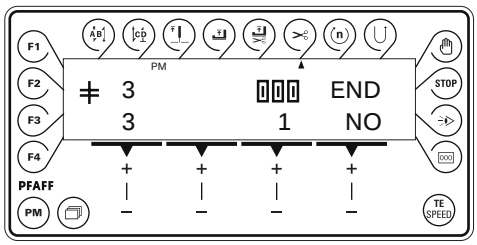

- After the machine has stopped the seam section end must be entered.
  By pressing the pedal in position "2" activate the seam section end by pedal, see Chapter 7.04 Pedal.

- By pressing the thread trimming key, switch on the corresponding function for the seam section.

END
- By pressing the corresponding +/- key select "YES", to conclude the seam input.

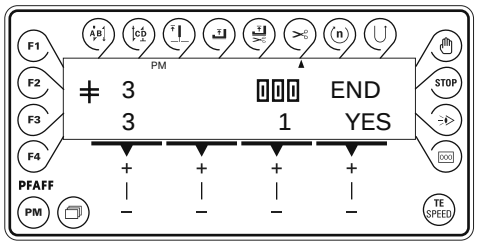

TE SPEED
- The Teach In programming of he seam with the three seam sections is then finished.
  By pressing the TE/Speed key, the thread is trimmed and the selected values are taken over. The program then changes to the sewing mode.

If no end of seam section function is switched on, the end of the seam section will be set with the pedal function, see Chapter 7.04 Pedal.

12 Care and maintenance

Cleaning	daily, several times if in continuous operation
Oil level (hook and needle head parts)	daily, before use
Lubricating the hook	daily, before use
Greasing the bevel gears	once a year

These maintenance intervals are calculated for the average running time of a single shift operation. If the machine is operated more than this, shorter intervals are recommended.

12.01 Cleaning

Clean the hook, hook compartment and toothed wheel 3 daily, several times if in continuous use.



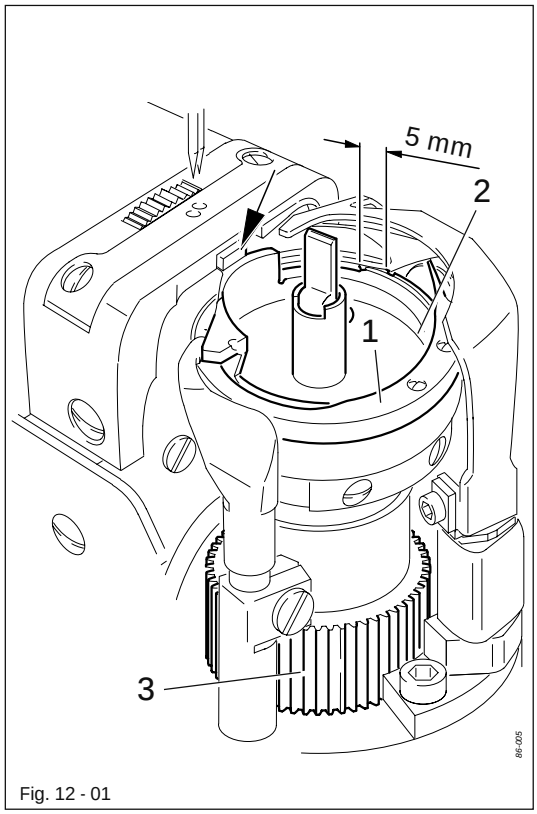

Fig. 12 - 01



Switch the machine off!
Danger of injury if the machine is started accidentally!

- Bring the needle bar to its highest position.
- Open the post cap and remove the bobbin case cap and the bobbin.
- Unscrew hook gib 1.
- Turn the handwheel until the point of bobbin case 2 penetrates into the groove of the hook race approx. 5 mm.
- Remove bobbin case 2.
- Clean the hook race with paraffin.
- When inserting the bobbin case 2, ensure that the horn of the bobbin case 2 engages in the groove of the needle plate.
- Screw hook gib 1 back.
- Insert bobbin case with the bobbin and close the post cap

12.02 Oiling the hook

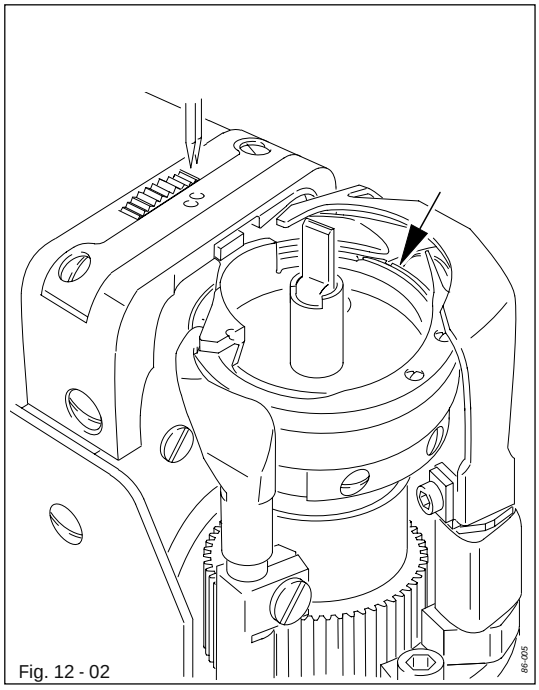

Fig. 12 - 02

Switch the machine off!
Danger of injury if the machine is started accidentally!

- Before commissioning the machine, and after long periods out of operation, pour a few drops of oil into the hook race (see arrow).

12.03 Checking the oil levels

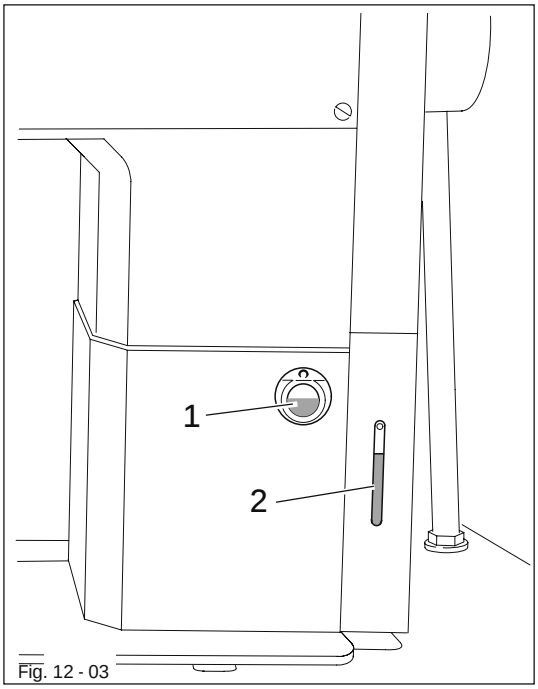

Fig. 12 - 03

Before each operation check the oil levels.
Oil must always be visible in the reserve tanks 1 and 2.

- If necessary, fill in oil through the respective hole of the reserve tank.

Only use oil with a mean viscosity of 22.0 mm²/s at 40ºC and a density of 0.865 g/cm³ at 15ºC.

We recommend PFAFF sewing machine oil, part number 280-1-120 144.

12.04 Filling the oil reservoir of the thread lubrication unit

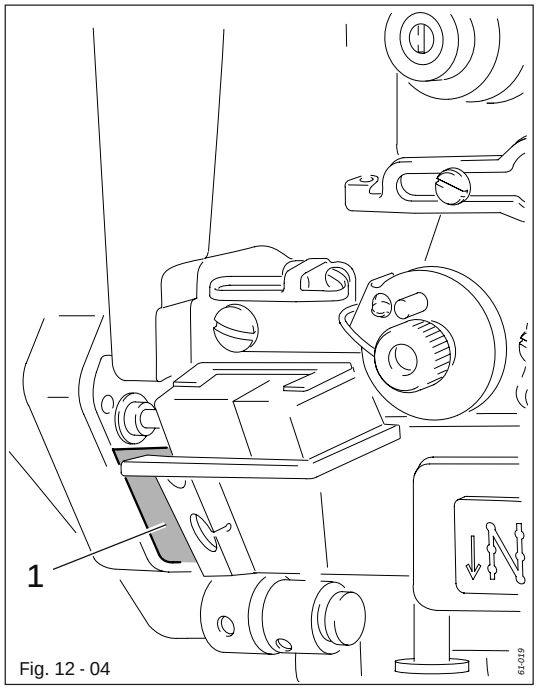

Fig. 12 - 04

Control the oil level before each use.

There must always be oil in the reservoir 1.

- If necessary, fill oil up to mark through hole.

We recommend
PFAFF thread lubricating oil,
Order No. 280-1-120 217.

12.05 Oiling the edge trimmer -726/05

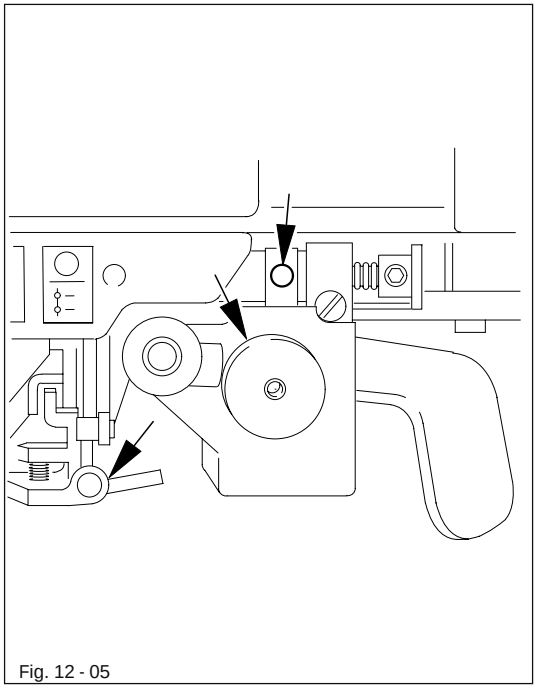
Fig. 12 - 05

- All moving parts and bearings marked with arrows in Fig. 12-05 are to be supplied with oil twice a week.

Use only oil with a mean viscosity of 22.0 mm^2/s at 40°C and a density of 0.865 g/cm^3 at 15°C.

We recommend
PFAFF sewing machine oil
Best.-Nr. 280-1-120 144.

12.06 Lubricating the bevel gears

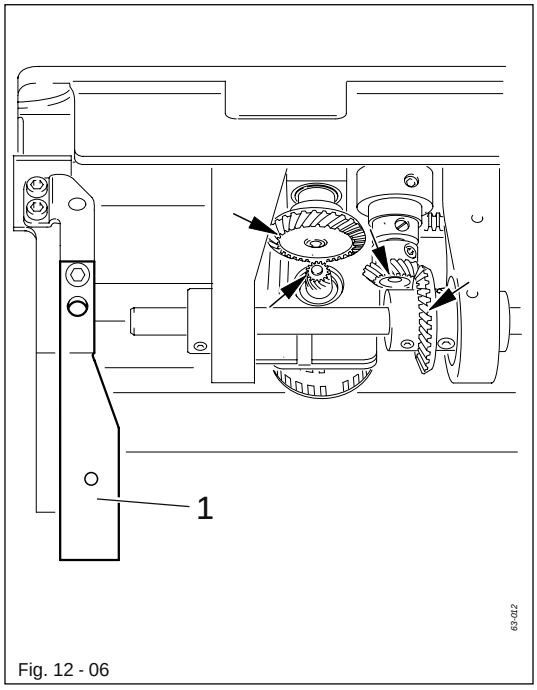

Fig. 12 - 06

Switch the machine off!
Danger of injury if the machine is started accidentally!

- All bevel gears must be supplied with new grease once a year.
- Tilt the sewing head back onto the support.

Fig. 12-06 shows the bevel gears of the 1591.

- Apply grease to all the tooth flanks and the rack (see arrows).
- To set the sewing head upright, press tilt lock 1 backwards and set the sewing head upright using both hands.

Use both hands to set the sewing head upright!
Danger of crushing between the sewing head and the table top!

We recommend PFAFF sodium grease with a dripping point of approx. 150C, Order No. 280-1-120 243.

13 Adjustment



Unless stated otherwise, during all adjustment work the machine must be disconnected from the electric and pneumatic power supply!
Danger of injury if the machine is started accidentally!

13.01 Notes on adjustment

All following adjustments are based on a fully assembled machine and may only be carried out by expert staff trained for this purpose.
Machine covers, which have to be removed and replaced to carry out checks and adjustments, are not mentioned in the text.
The order of the following chapters corresponds to the most logical work sequence for machines which have to be completely adjusted. If only specific individual work steps are carried out, both the preceding and following chapters must be observed.
Screws, nuts indicated in brackets ( ) are fastenings for machine parts, which must be loosened before adjustment and tightened again afterwards.

13.02 Tools, gauges and other accessories

- 1 set of screwdrivers with blade widths from 2 to 10 mm
- 1 set of wrenches with jaw widths from 7 to 13 mm
- 1 set of Allan keys from 1.5 to 6 mm
- 1 metal ruler (Part no. 08-880 218-00)
- 1 adjustment pin (needle position in direction of sewing Part no. 61-111 641-46)
- 1 adjustment gauge (Part No. 08-880 136-01)
- 1 adjustment gauge (Part No. 61-111 643-33)
- 1 locking pin for needle bar rise (Part No. 61-111 641-39)

13.03 Abbreviations

t.d.c. = top dead centre
b.d.c. = bottom dead centre

13.04 Adjusting the basic machine

13.04.01 Needle position in the direction of sewing on the PFAFF 1571 and 1591

Requirement
With the stitch length set at "5", in its front and rear point of reversal the needle should be the same distance from the inside edges of the needle hole.

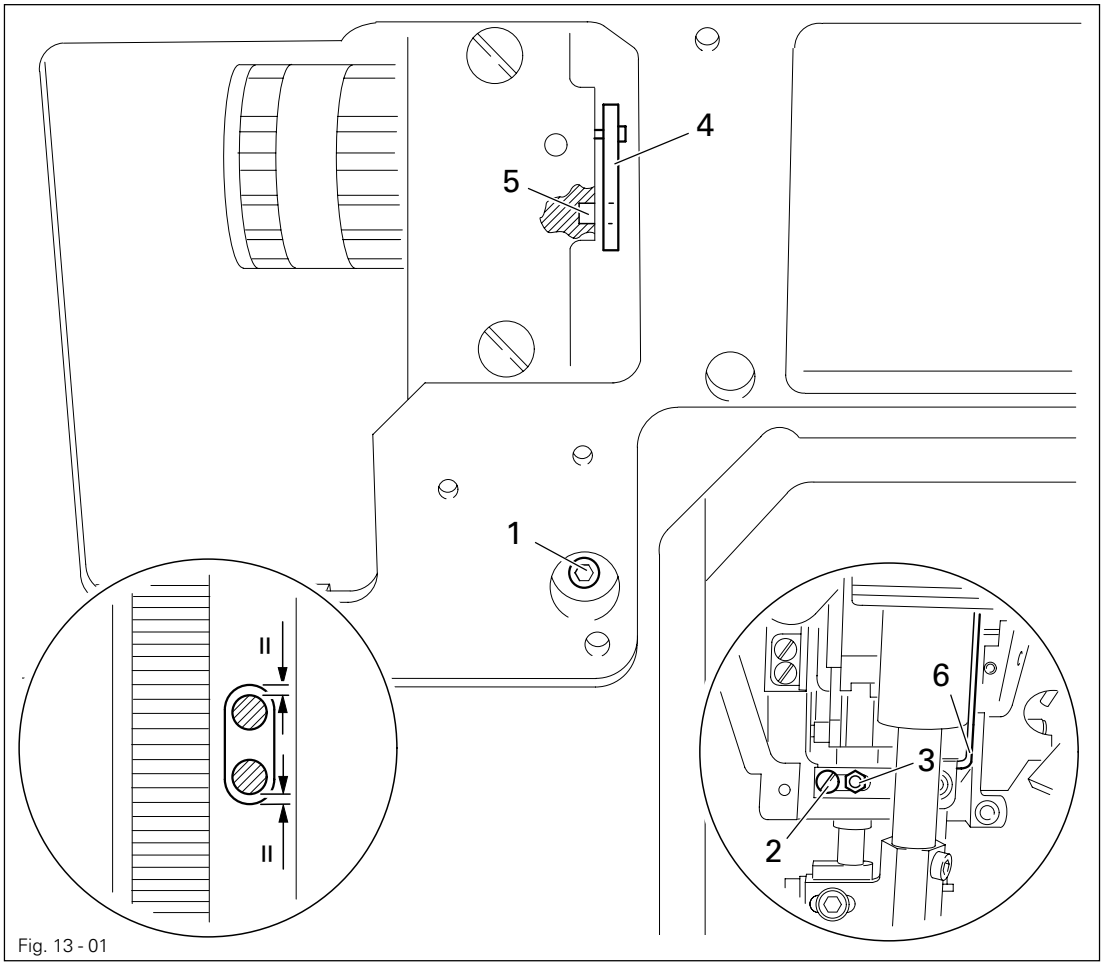

Fig. 13 - 01

- Switch on the machine and set the stitch length at "5".
- Switch the machine off and on (synchronization of the needle bar to the stitch length).
- Sew one stitch and check the rear position of the needle in accordance with the requirement.
- Press the reverse feed key, sew one stitch and check the front position of the needle in accordance with the requirement.
- Switch off the machine.
- To carry out the adjustment, loosen screw **1** through the hole on the back of the case.
- Loosen screw **2** and nut **3**.
- Guide the bent part of the adjustment pin through the elongated hole on the rear side of the case and insert it into hole **5** through the hole in lever **4**.
- Adjust the needle bar frame **6** (screw **1**) in accordance with the requirement.

Screw **2** and nut **3** remain loosened for the next adjustment

- Carry out a check in accordance with the **requirement**.

13.04.02 Positioning the needle in the direction of sewing PFAFF 1574

Requirement
The needle must penetrate the middle of the needle hole as viewed in the direction of sewing.

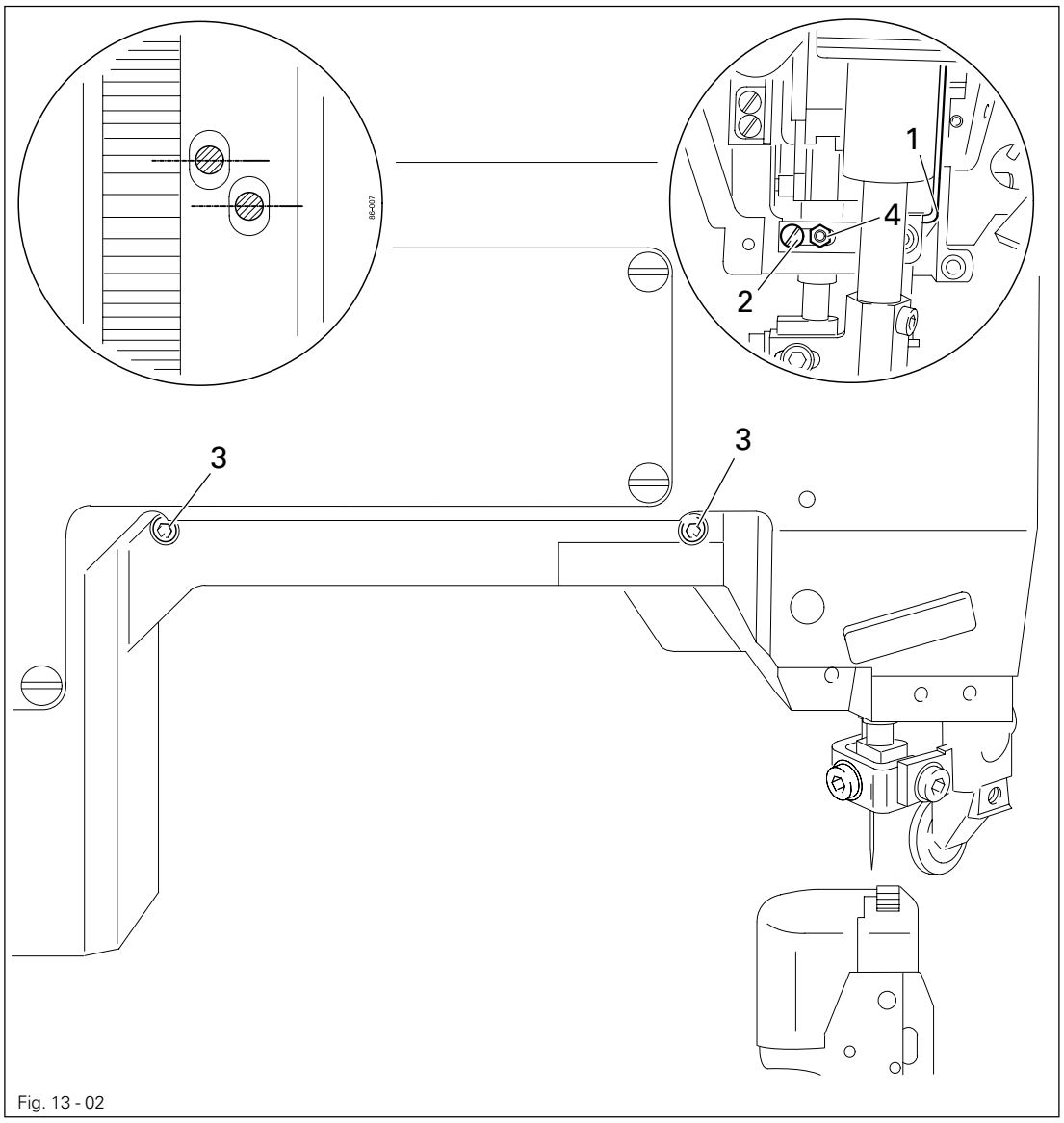

Fig. 13 - 02

- Move the needle bar frame **1** (screws **2** and **4** and nut **3**) in accordance with the **requirement.**

Screws **4** are accessible through the holes on the back of the housing.

13.04.03 Limiting the needle bar frame on the PFAFF 1591 and 1571

Requirement
With the stitch length set at "5", when the needle is in its front and rear point of reversal screw **4** should be the same distance from the inside edge of its hole.

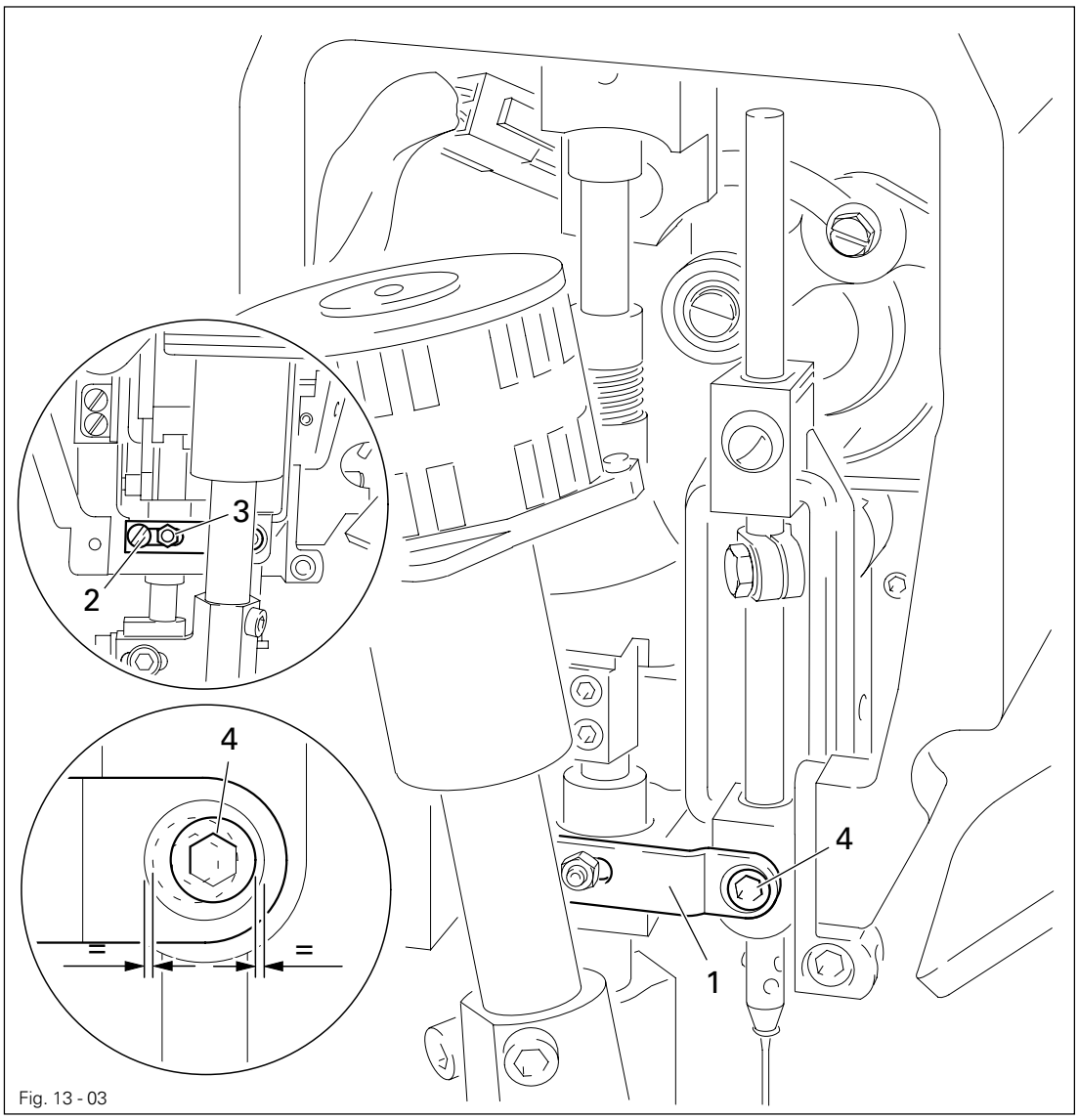

Fig. 13 - 03

- Switch on the machine and set the stitch length at "5".
- Sew one stitch and check the rear position of screw **4** in accordance with the **requirement.**
- Operate the reverse feed key, sew one stitch and check the front position of screw **4** in accordance with the **requirement.**
- To carry out the adjustment shift plate **1** (screw **2** and nut **3**) in accordance with the **requirement**.

13.04.04 Preadjusting the needle height

Requirement
With the needle bar at TDC there must be approx. **21 mm** between the point of the needle and the needle plate.

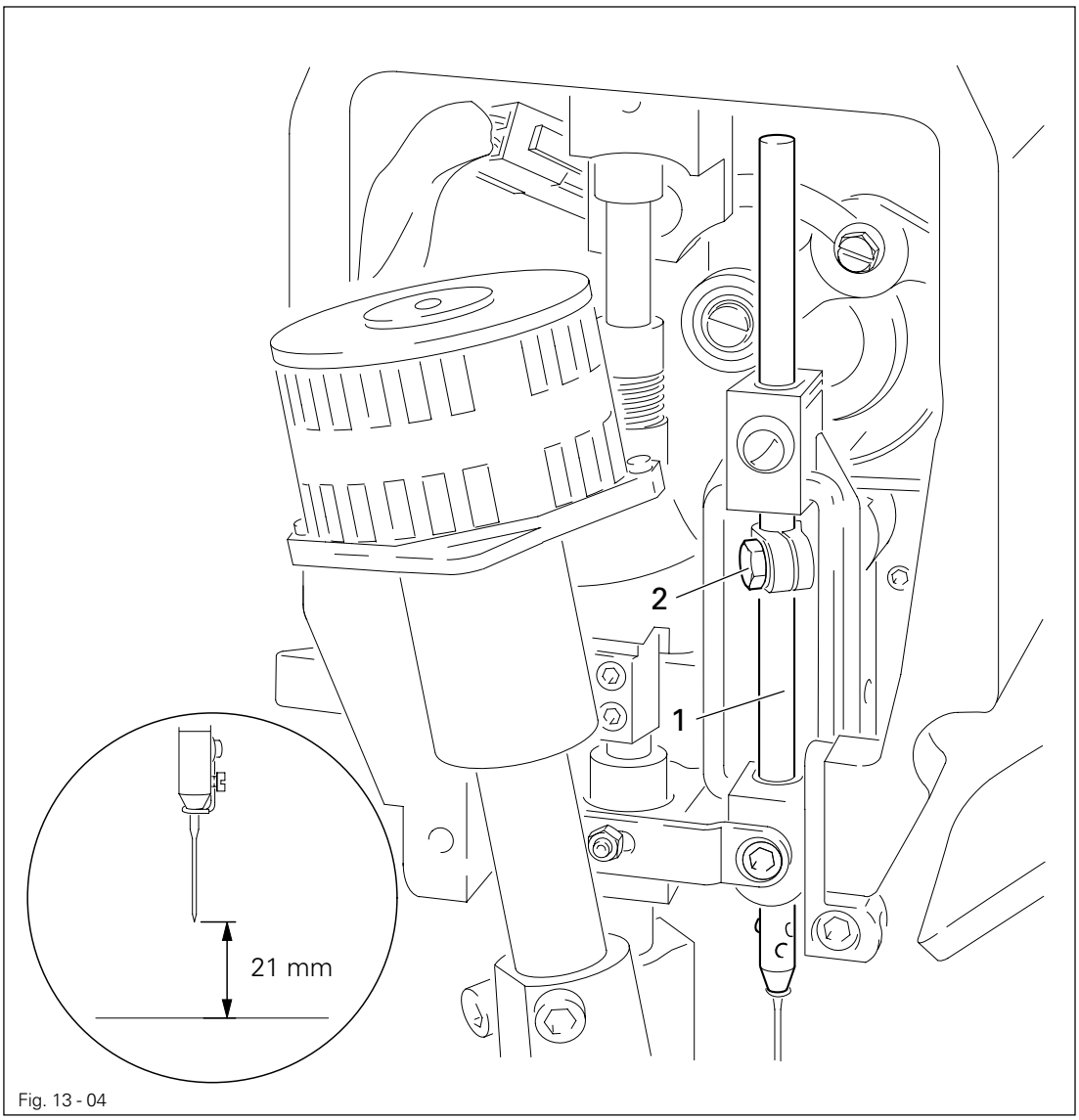

Fig. 13 - 04

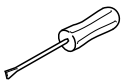

- Move the needle bar **1** (screw **2**) in accordance with the **requirement** without turning it.

13.04.05 Needle rise, hook clearance, needle height and needle guard on the PFAFF 1571

Requirement

With the needle bar positioned **2.0 mm after BDC** and the stitch length set at "0.8"

1. the hook point must be at needle centre with a hook-to-needle clearance of **0.05** to **0.1 mm**;
2. the top of the needle eye must be **0.8** to **1.0** mm below the hook point;
3. the needle guard **6** must touch the needle lightly.

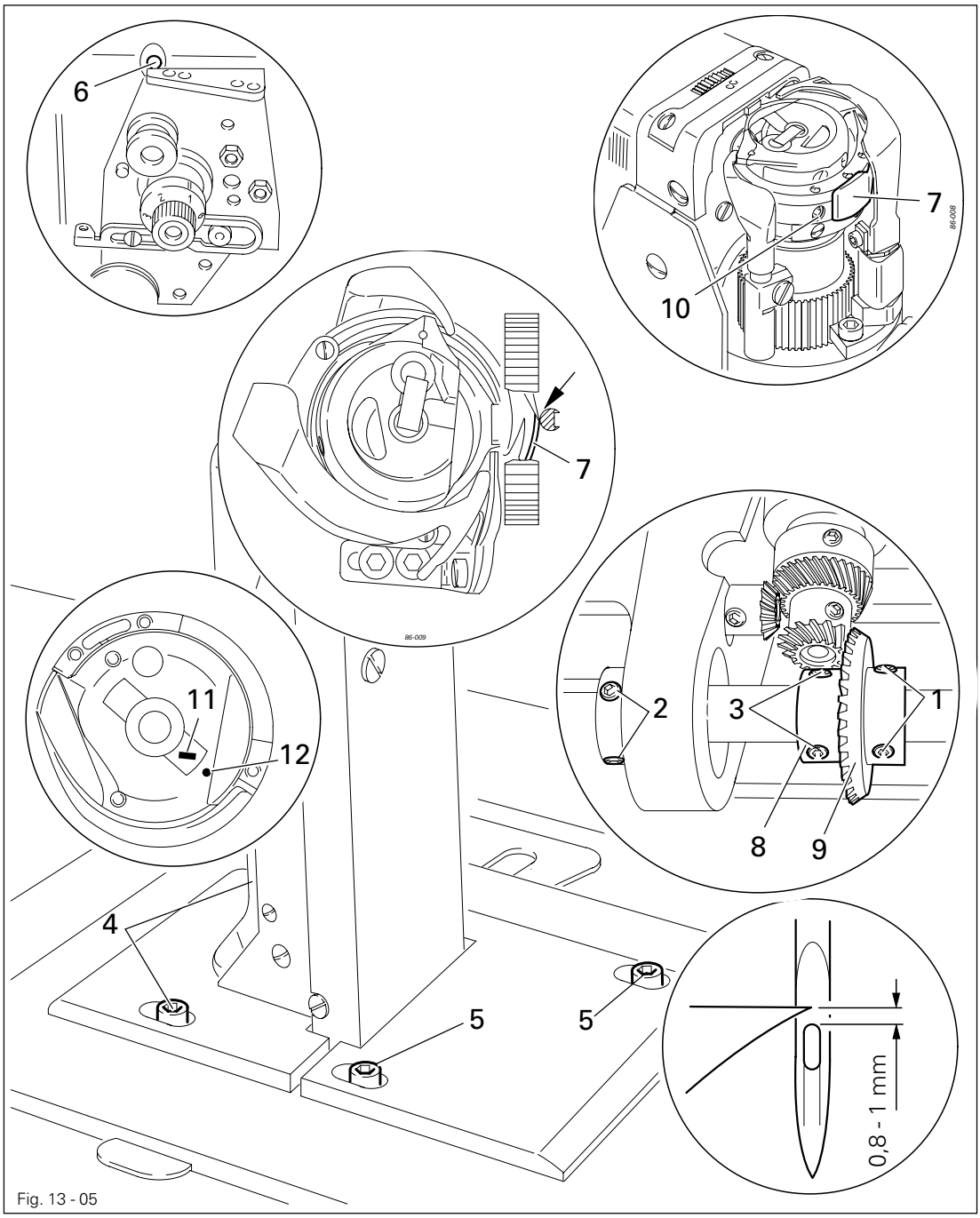

Fig. 13 - 05

- Set stitch length at "0.8".
- Loosen both screws **1, 2, 3, 4** and **5**.

- Bring the needle bar to 2.0 mm after b.d.c. and place the locking pin for the needle bar rise (part no. 61-111 641-39) in hole 6.
- Set the hook point to the centre of the needle, taking care to see that the needle is not deflected by needle guard 7.
- Set the needle height in accordance with requirement 2, compare Chapter 13.04.04 Pre-adjusting the needle height.
- Adjust hook post in accordance with requirement 1 and tighten screws 4 and 5.
- Taking the play of the bevel gear into consideration, tighten screws 1.
- Move adjustment ring 8 against bevel gear 9 and tighten screws 2 and 3.
- Adjust needle guard 7 (screw 10) in accordance with requirement 3.



When the hook is changed, make sure that markings 11 and 12 are on one side.

13.04.06 Needle rise, hook clearance, needle height and needle guard on the PFAFF 1574

Requirement

With the needle bar positioned **2,0 mm after BDC** on both hooks

1. the hook point must be at needle centre with a hook-to-needle clearance of **0.05** to **0.1 mm**;
2. the top of the needle eye must be **0.8** to **1.0** mm below the hook points;
3. the needle guard **9** must touch the needle lightly.

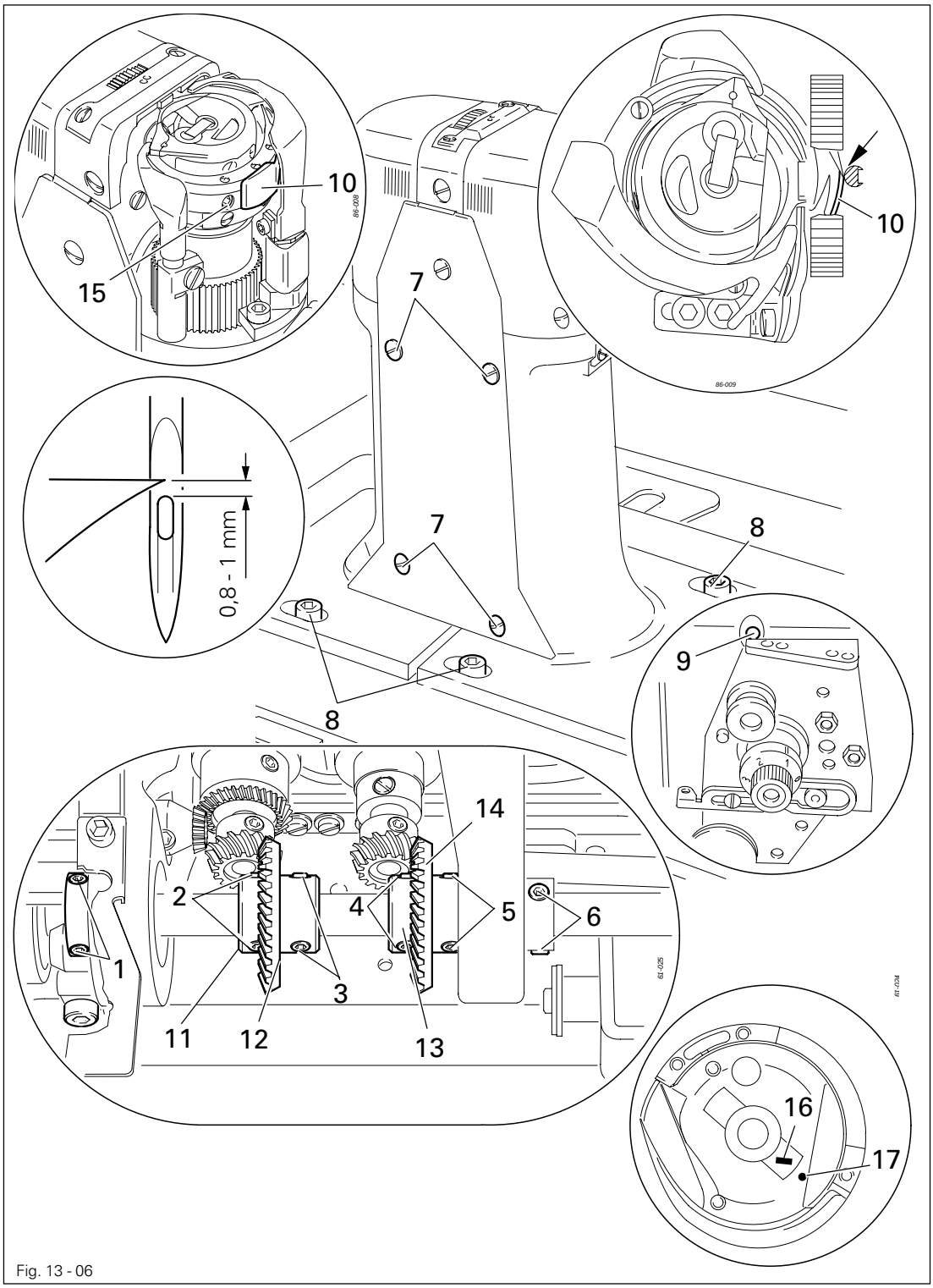

Fig. 13 - 06

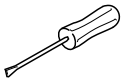

- Loosen screws 1, 2, 3, 4, 5, 6 and 7.
- Loosen screws 8 slightly.
- Bring the needle bar to 2.0 mm after b.d.c. and place the locking pin for the needle bar rise (part no. 61-111 641-39) in hole 9.
- Set both hook points to the centre of the needle, taking care to see that the needles are not deflected by needle guard 10.
- Set the needle height in accordance with requirement 2, compare Chapter 13.04.04 Pre-adjusting the needle height.
- Adjust both hook posts in accordance with requirement 1 and tighten screws 8.
- Tighten screws 1 and 6.
- Taking the play of the bevel gear into consideration, tighten screws **3** and **5**.
- Move adjustment ring 11 against bevel gear 12 and tighten screws 2.
- Move adjustment ring 13 against bevel gear 14 and tighten screws 4.
- Tighten screws 7 on both sides of the post.
- Adjust needle guard 10 (screw 15) on both hooks in accordance with requirement 3.



When the hook is changed, make sure that markings 16 and 17 are on one side.

13.04.07 Needle rise, hook clearance, needle height and needle guard on the PFAFF 1591

Requirement

With the needle bar positioned **2.0 mm after BDC** and the stitch length set at "0.8"

1. the hook point must be at needle centre with a hook-to-needle clearance of **0.05** to **0.1 mm**;
2. the top of the needle eye must be **0.8** to **1.0** mm below the hook point;
3. the needle guard **6** must touch the needle lightly.

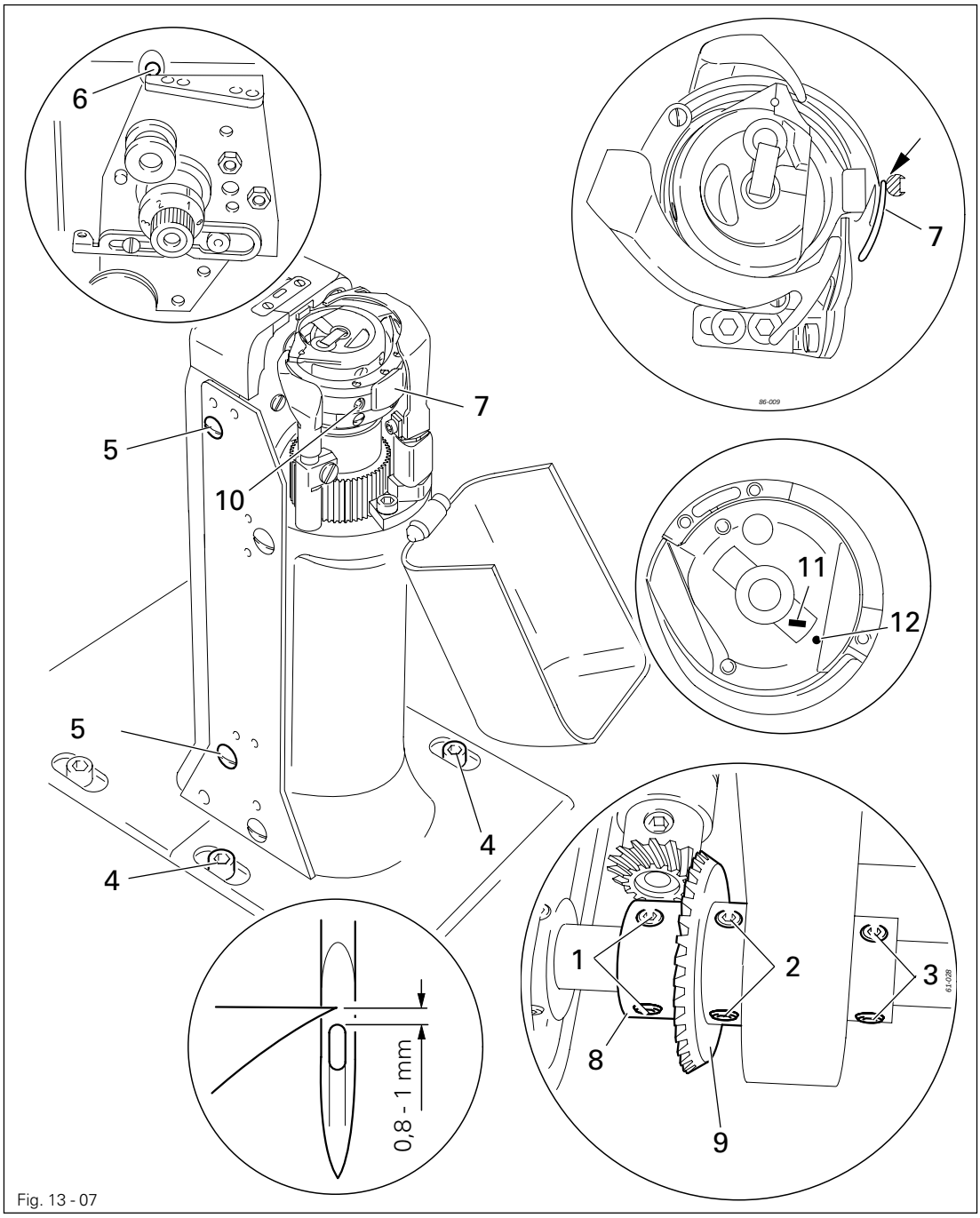

Fig. 13 - 07

- Set the stitch length at „0.8“.
- Loosen screws **1, 2, 3** and **4**, as well as screws **5** on both sides of the post.

- Bring the needle bar to 2.0 mm after b.d.c. and place the locking pin for the needle bar rise (part no. 61-111 641-39) in hole **6**.
- Set the hook point to the centre of the needle, taking care to see that the needle is not deflected by needle guard **7**.
- Set the needle height in accordance with **requirement 2**, compare **Chapter 13.04.04 Pre-adjusting the needle height.**
- Adjust hook post in accordance with **requirement 1** and tighten screws **4**.
- Taking the play of the bevel gear into consideration, tighten screws **2**.
- Move adjustment ring **8** against bevel gear **9** and tighten screws **1**.
- Screws **5** remain loosened for further adjustments.
- Adjust needle guard **7** (screw **10**) in accordance with **requirement 3**.



When the hook is changed, make sure that markings **11** and **12** are on one side.

13.04.08 Needle position crosswise to sewing direction on the PFAFF 1571

Requirement
When the stitch length is set at its maximum, the needle must be positioned in the centre of the needle hole when entering and coming out of the needle plate.

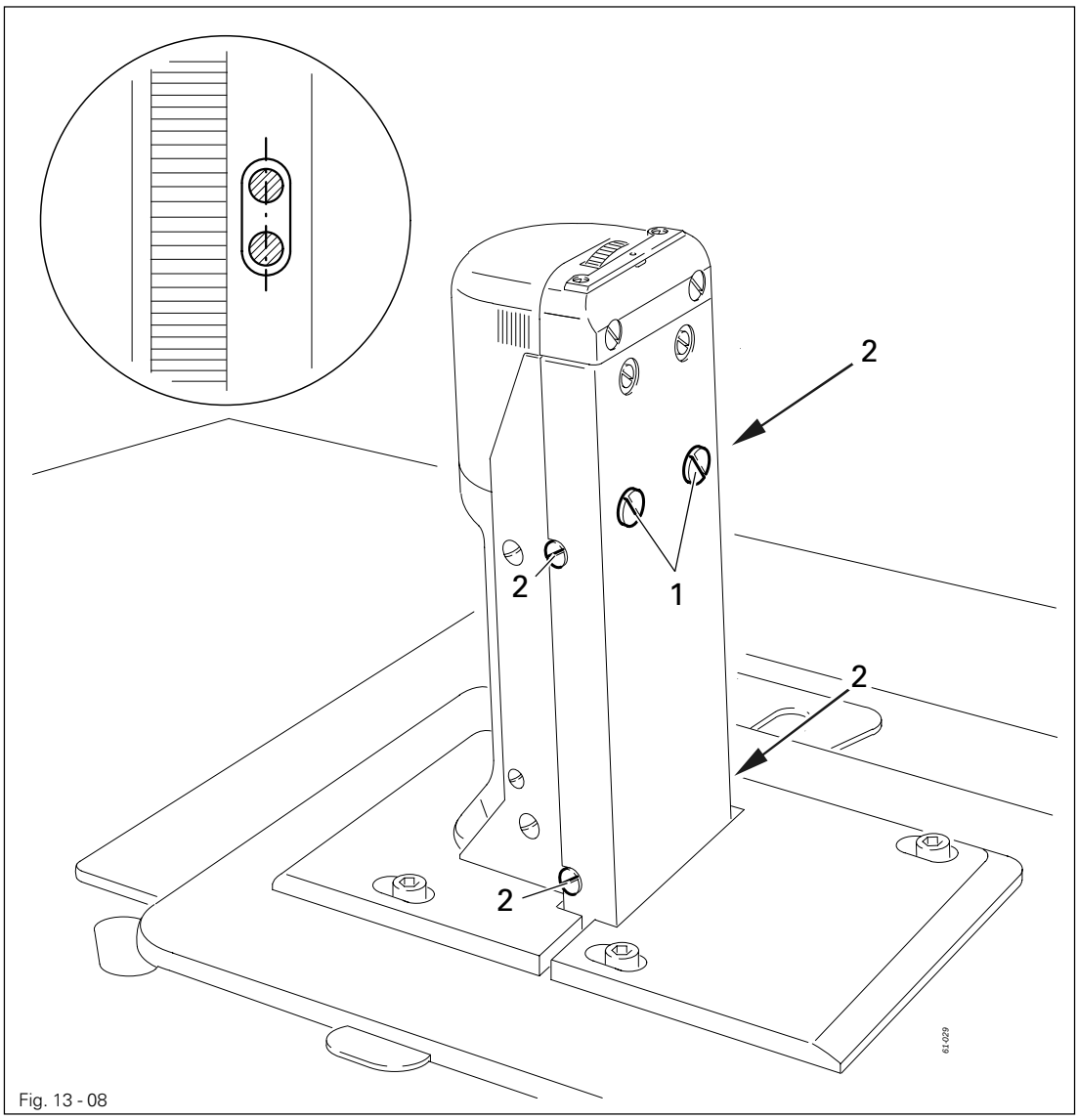

Fig. 13 - 08

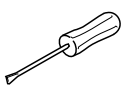

- Turn screws **1** (screws **2**, on both sides of the post) according to the **requirement.**

13.04.09 Needle position crosswise to sewing direction on the PFAFF 1574

Requirement
As seen crosswise to the sewing direction, the needles must penetrate in the centre of their needle holes.

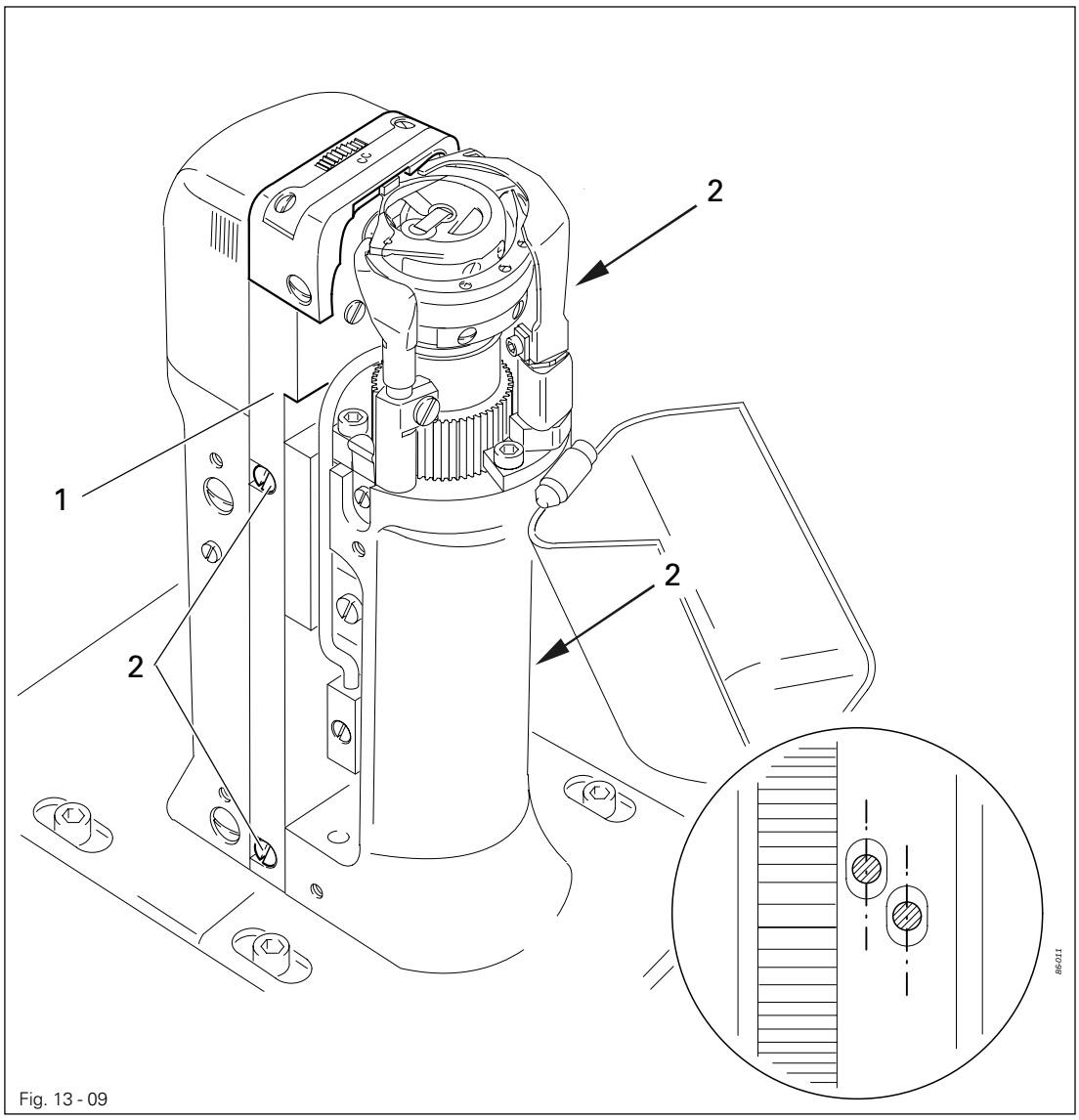

Fig. 13 - 09

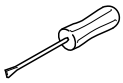

- Shift bearing plate **1** (screws **2**, on both sides of the post) according to the **requirement.**

13.04.10 Needle position crosswise to sewing direction on the PFAFF 1591

Requirement
As seen crosswise to the sewing direction, the needle must penetrate in the centre of the needle hole.

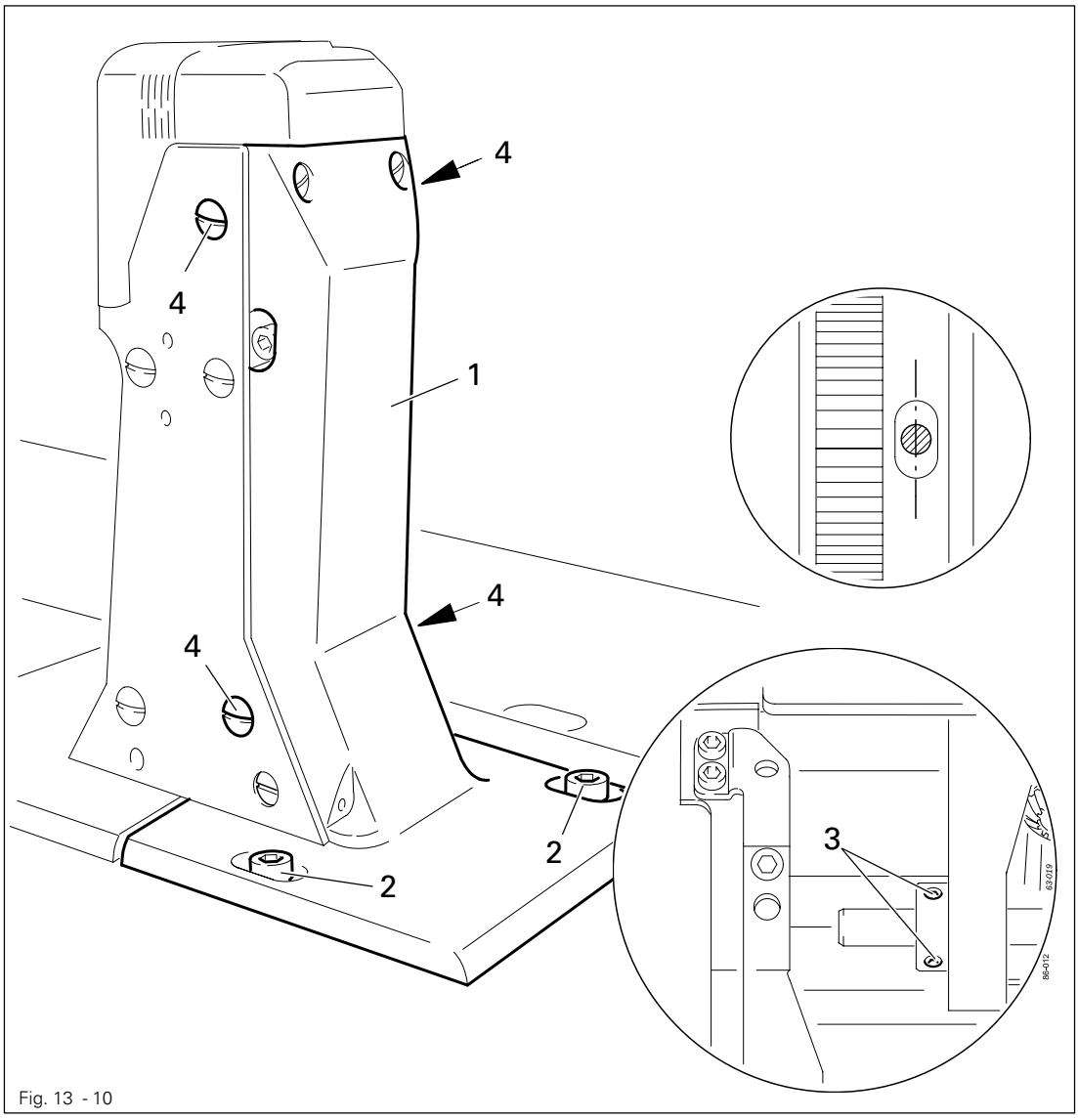

Fig. 13 - 10

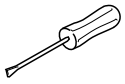

- Adjust feed wheel post **1** (screws **2, 3** and **4**) according to the **requirement.**

13.04.11 Height and stroke of the bobbin case opener

Requirement

1. The top edges of the bobbin case opener **1** and bobbin case base **3** should be on one level.
2. When the bobbin case opener **1** has deflected the bobbin case to its furthest point, the catch of the bobbin case should be **0.3 - 0.5 mm** from the back edge of the needle plate recess.

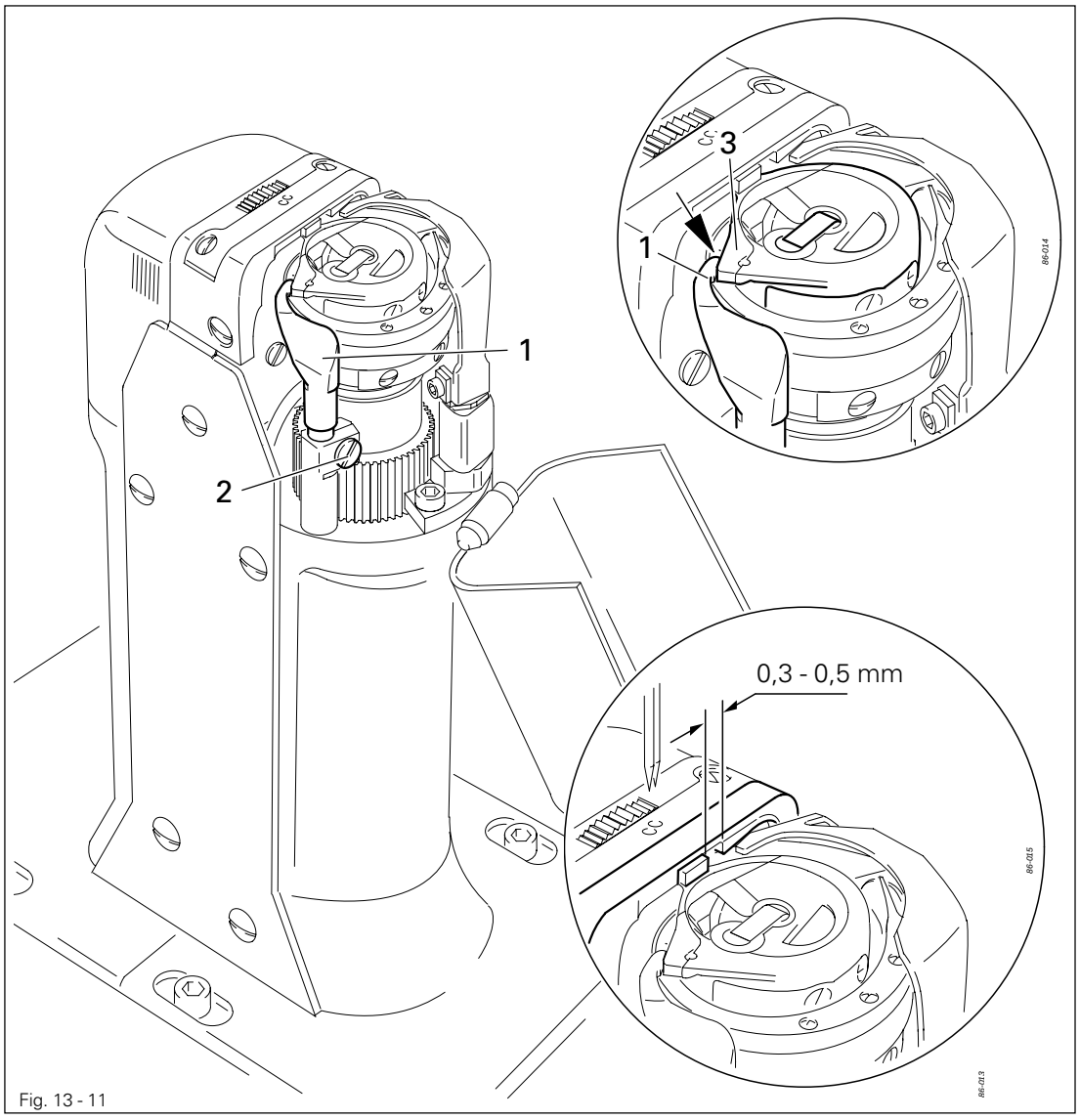

Fig. 13 - 11

- Adjust bobbin case opener **1** (screw **2**) in accordance with **requirement 1.**
- Turn the balance wheel until the bobbin case opener has deflected the bobbin case to its furthest point.
- Adjust bobbin case opener **1** (screw **2**) in accordance with **requirement 2.**

On the PFAFF 1574 these adjustments must be repeated on the right post. Depending on the thread size, a variation of the setting in **Requirement 2** is permitted.

13.04.12 Height of the feed wheel on the PFAFF 1571

Requirement

1. When pressure is applied to the feed wheel **4**, it should protrude from the needle plate by tooth height (approx. **0.8 mm**)
2. When no pressure is applied to the feed wheel **4** , it should have a vertical play of approx. **0.3 mm**.

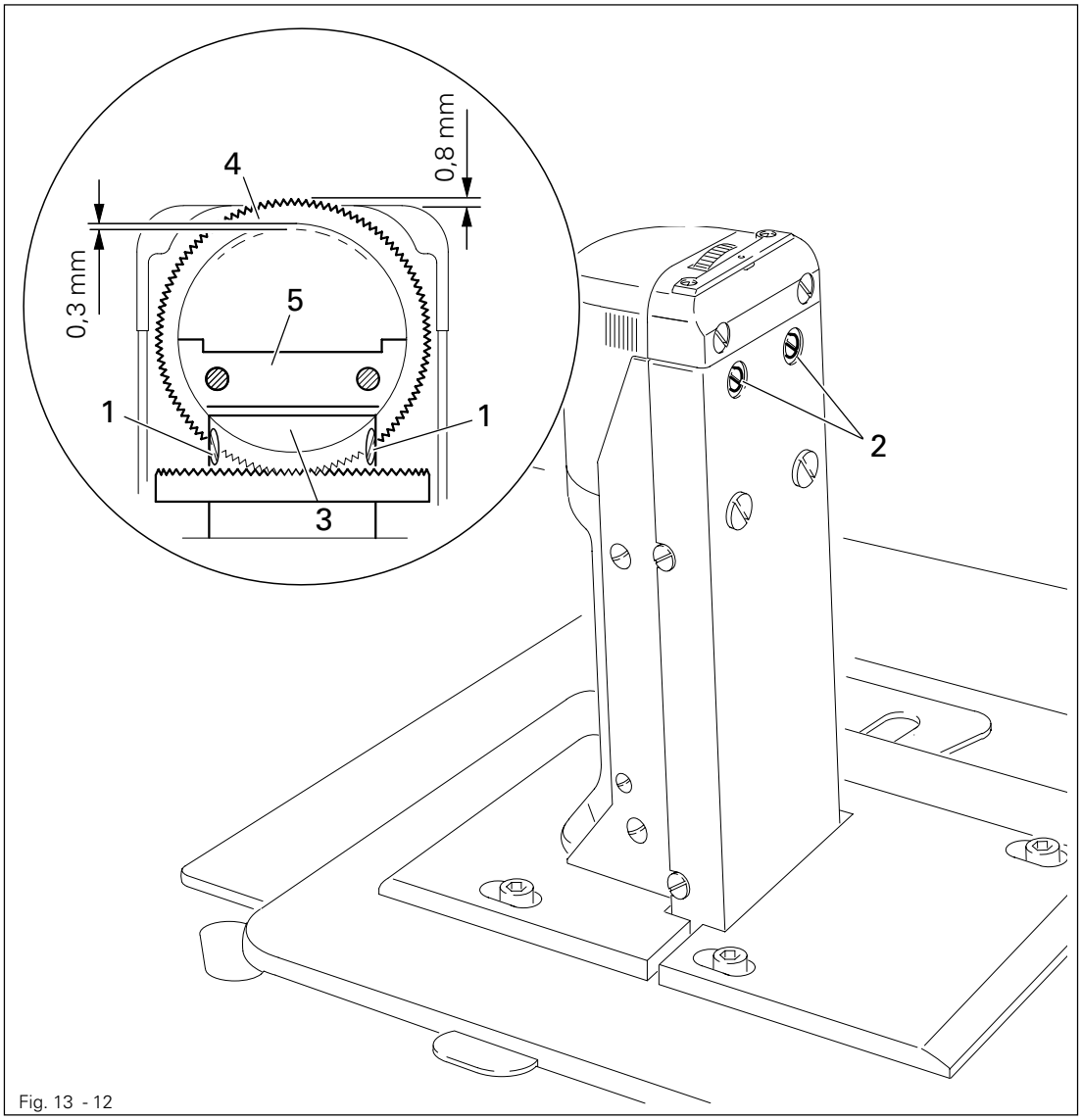

Fig. 13 - 12

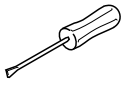

- Swing out the roller presser.
- Loosen screws **1** and **2**.
- Adjust drive wheel **3** according to **requirement 1**, taking care to see that the teeth of drive wheel **3** and feed wheel **4** lock into each other properly.
- Tighten screws **1**.
- Adjust guide **5** according to **requirement 2** and tighten screws **2**.

13.04.13 Height of the feed wheel on the PFAFF 1574

Requirement

1. When pressure is applied to the feed wheel **4**, it should protrude from the needle plate by tooth height (approx. **0.8 mm**)
2. When no pressure is applied to the feed wheel **4** , it should have a vertical play of approx. **0.3 mm**.

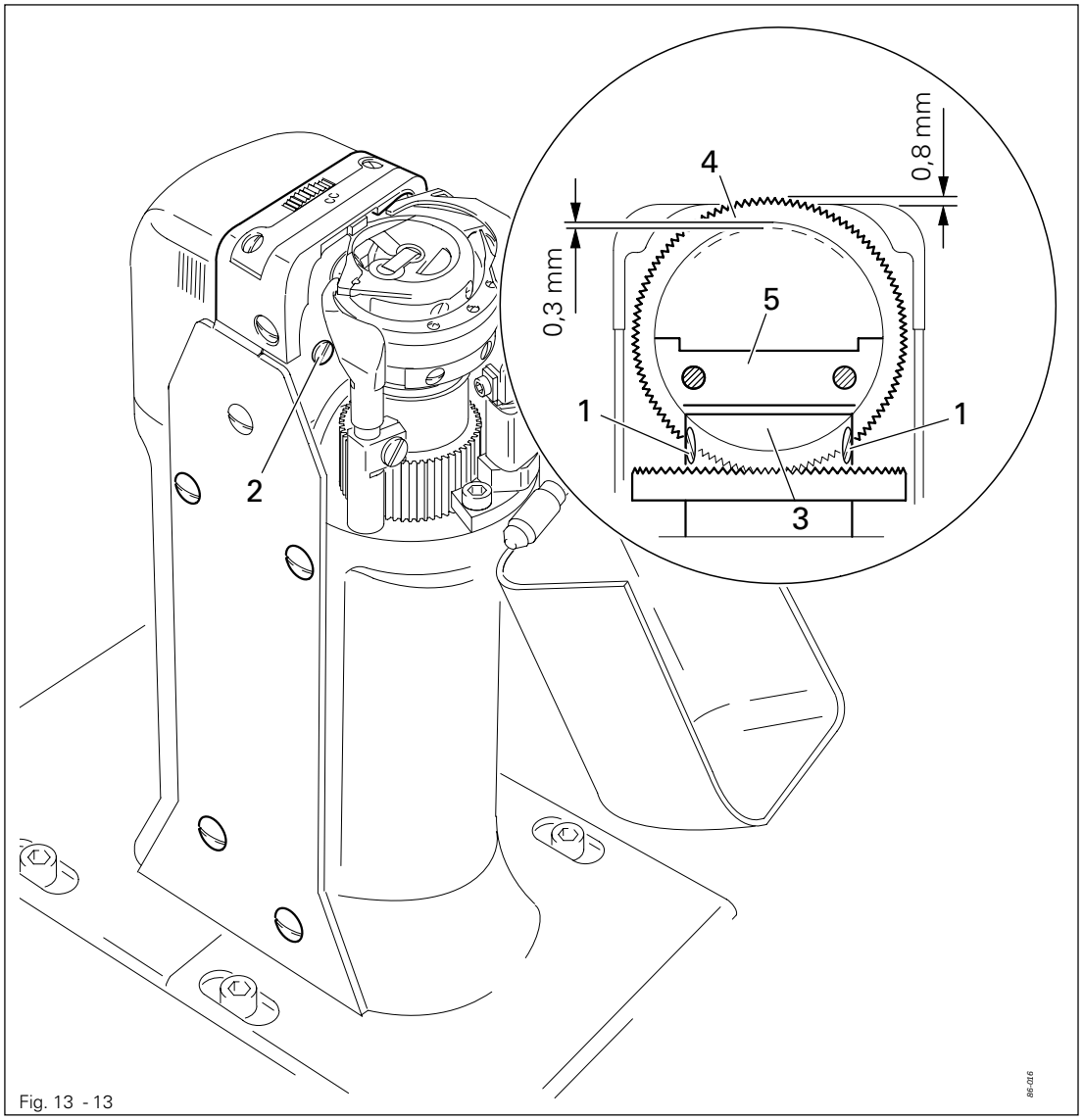

Fig. 13 - 13

- Swing out the roller presser.
- Loosen screws **1** and **2** (two screws each).
- Adjust drive wheel **3** according to **requirement 1**, taking care to see that the teeth of drive wheel **3** and feed wheel **4** lock into each other properly.
- Tighten screws **1**.
- Adjust guide **5** according to **requirement 2** and tighten screws **2**.

13.04.14 Height of the feed wheel on the PFAFF 1591

Requirement
The feed wheel should protrude from the needle plate by tooth height (approx. **0.8 mm**)

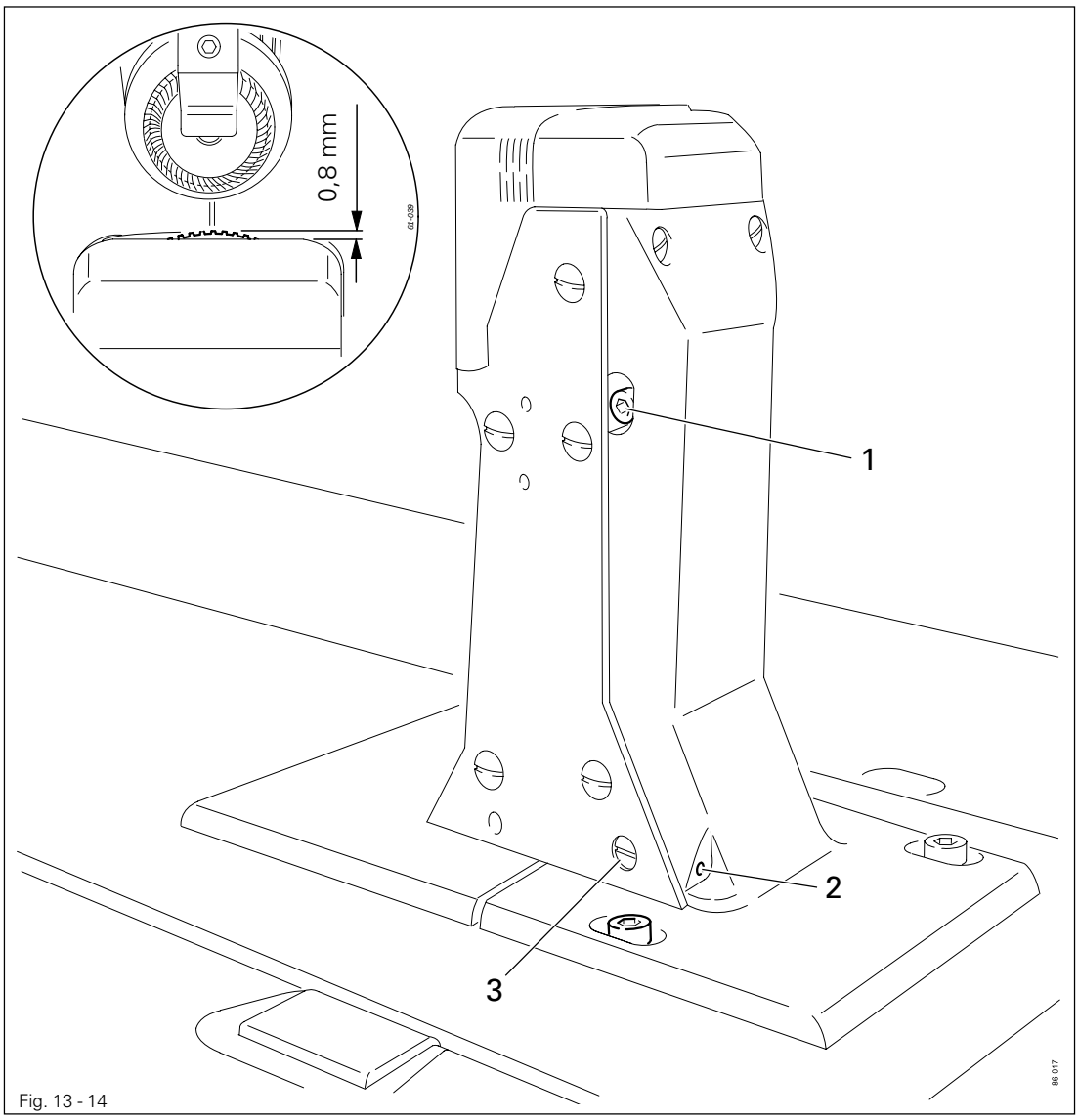

Fig. 13 - 14

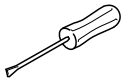

- Swing out the roller presser.
- Loosen screws **1.**
- Adjust eccentric **3** (fastening screw accessible through hole **2**) according to the **requirement.**
- Tighten screws **1**.

13.04.15 Clearance between roller presser and feed wheel

Requirement
With lever **1** raised the clearance between the roller presser and the feed wheel must be **7 mm**.

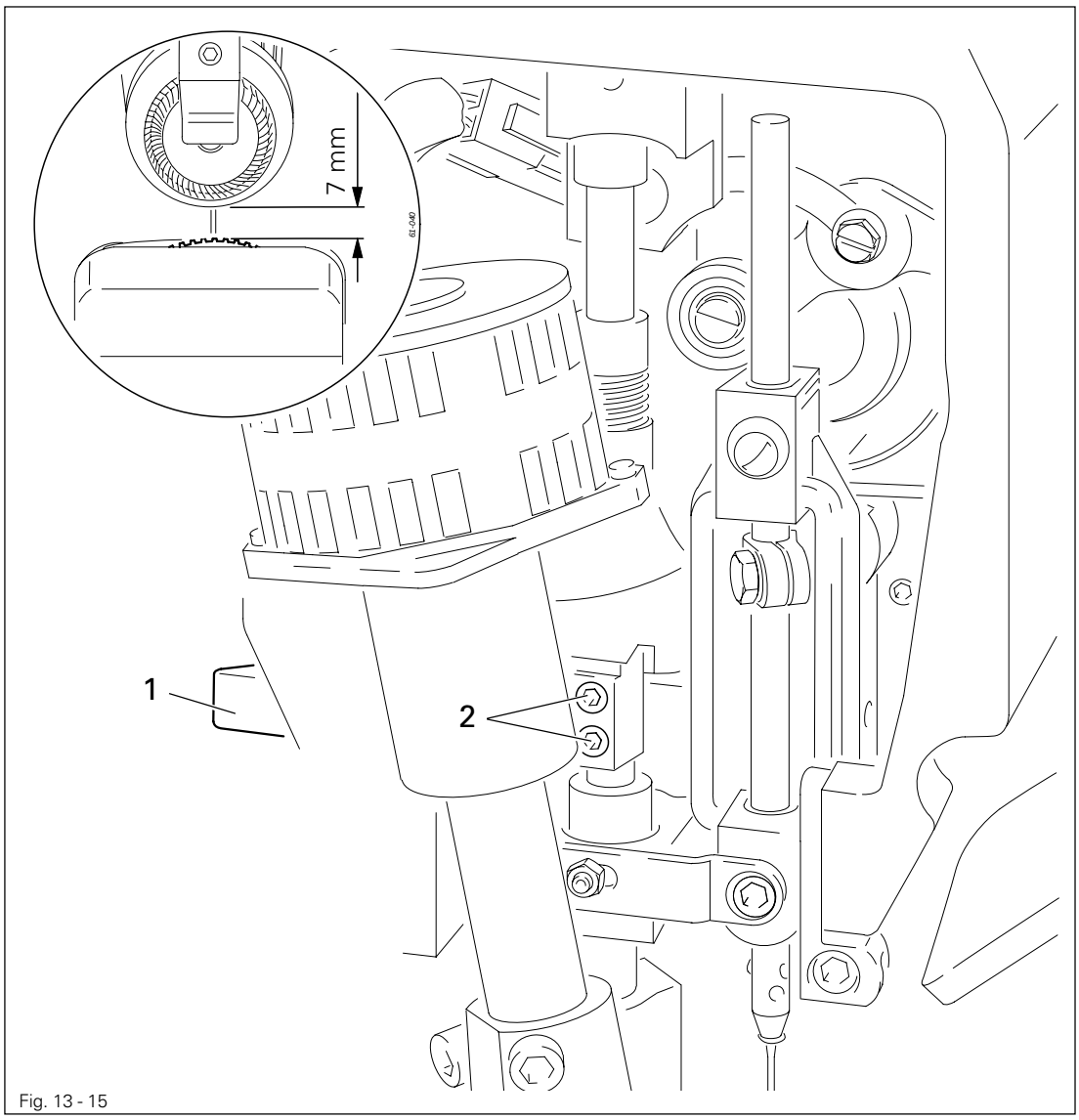

Fig. 13 - 15

- Raise lever **1**.
- Move the presser foot bar (screws **2**) in accordance with the **requirement**. Take care to ensure that the roller presser is parallel to the feed wheel.

13.04.16 Roller-presser

Requirement

When the roller-presser **1** is resting on the feed wheel **5** it must

1. be parallel to the feed wheel **5** when viewed in the direction of sewing,
2. be in the middle of the (left) needle when viewed in the direction of sewing and
3. be as close as possible to the (left) needle when viewed in transverse direction of sewing.

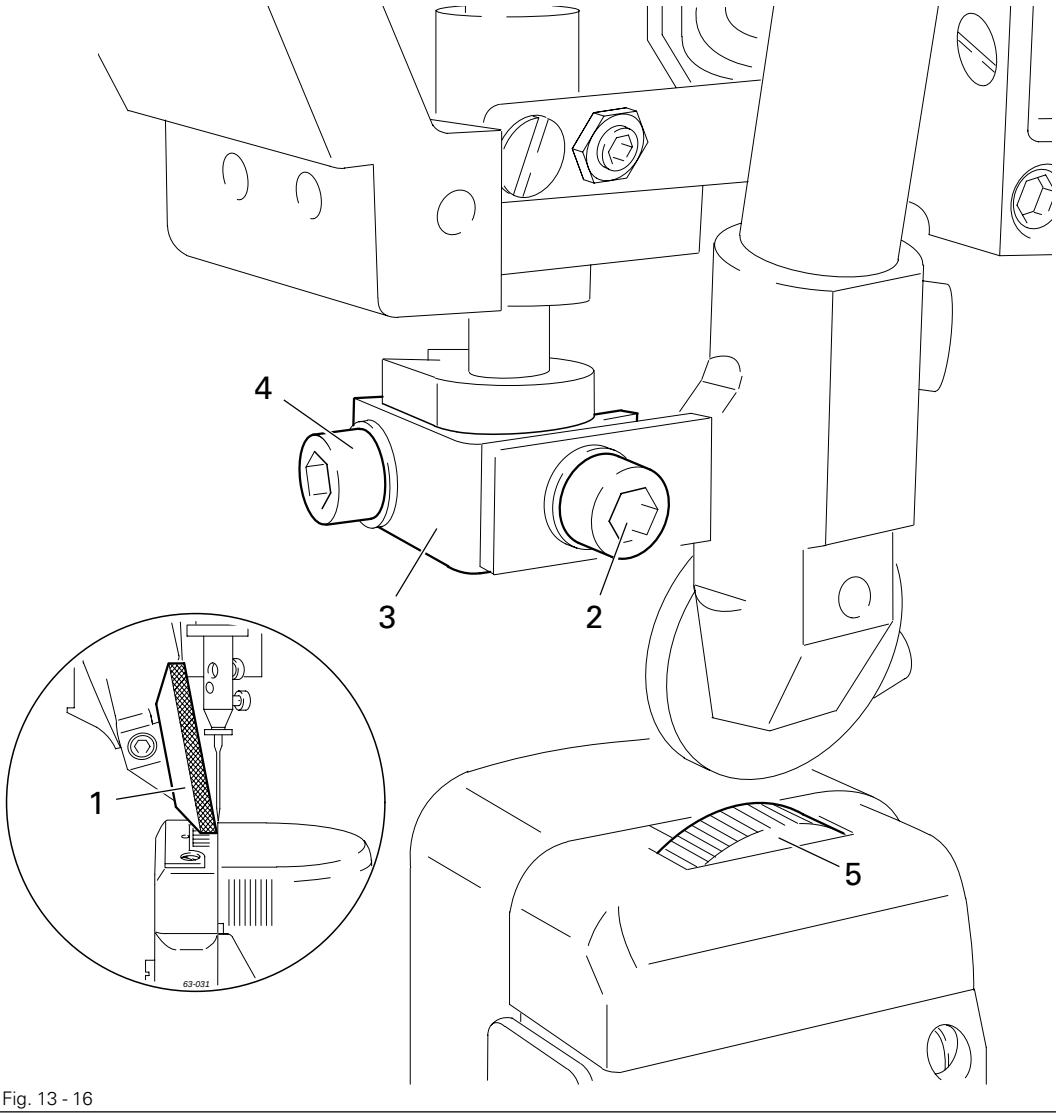

Fig. 13 - 16

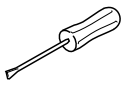

- Raise the roller-presser **1**.
- Always observe **requirement 1** when carrying out the following adjustments.
- Move the roller-presser **1** (screw **2**) in accordance with **requirement 2**.
- Allow the roller-presser **1** to come to rest on the feed wheel **5**.
- Move the roller-presser bracket **3** (screw **4**) in accordance with **requirement 3.**

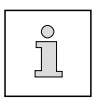

When sewing very tight curves the roller-presser **1** should be moved toward the operator slightly.

13.04.17 Retainer (only on the PFAFF 1574)

Requirement

Retainer **1** should

1. Be as near to the needle as possible, seen in the direction of sewing, and
2. Centred to the needle, seen crosswise to the direction of sewing.
3. When the roller presser is lowered, the clearance between the retainer **1** and the workpiece should be **0.2 - 0.3 mm**.

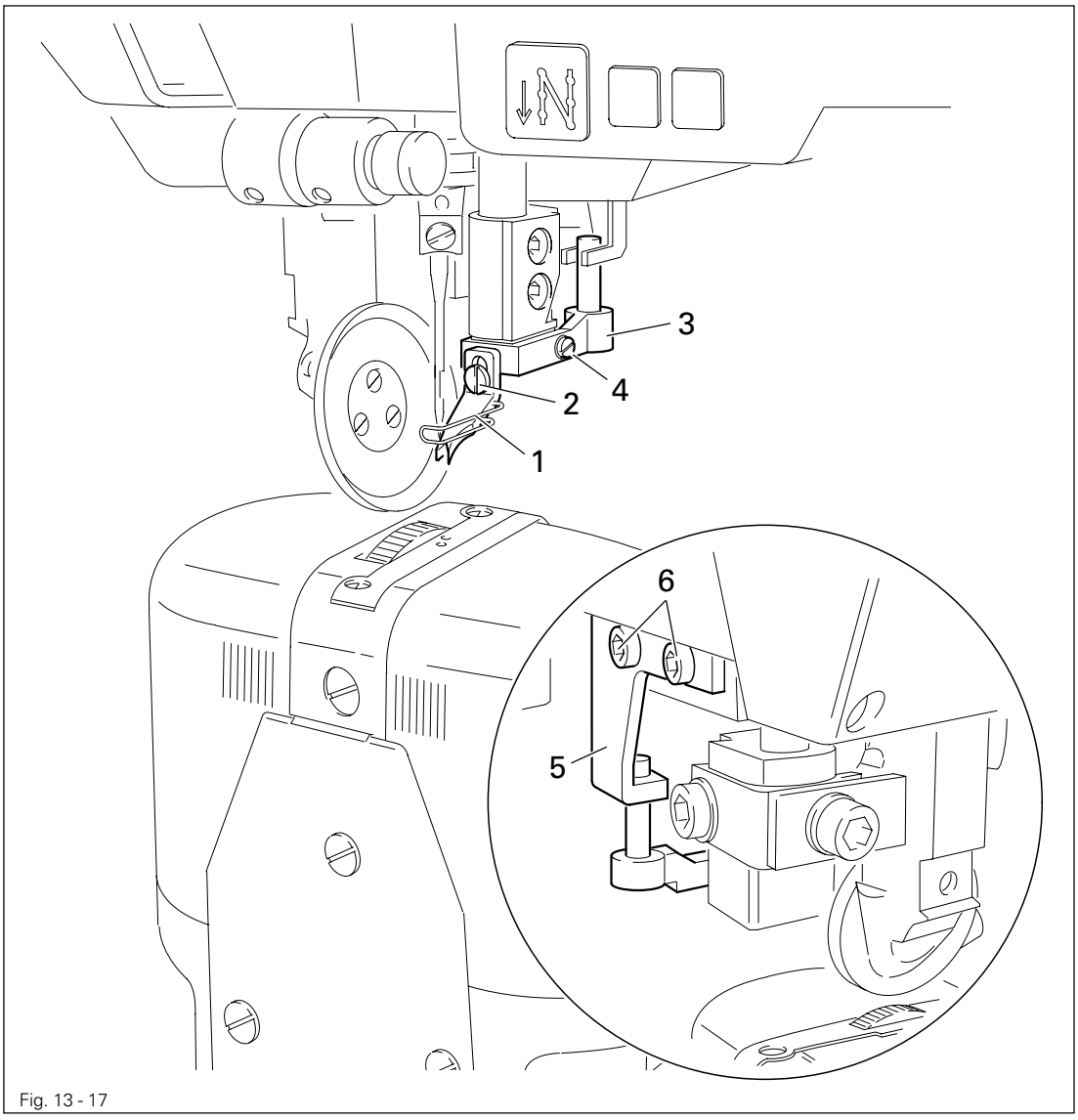

Fig. 13 - 17

- Adjust retainer **1** (screw **2**) in accordance with **requirement 3.**
- Adjust holder **3** (screw **4**) in accordance with **requirement 1**.
- Adjust holder **5** (screws **6**) in accordance with **requirement 2**.

13.04.18 Automatic presser-foot lifter

Requirement
When solenoid **1** is activated, lever **3** for the roller-presser must drop automatically.

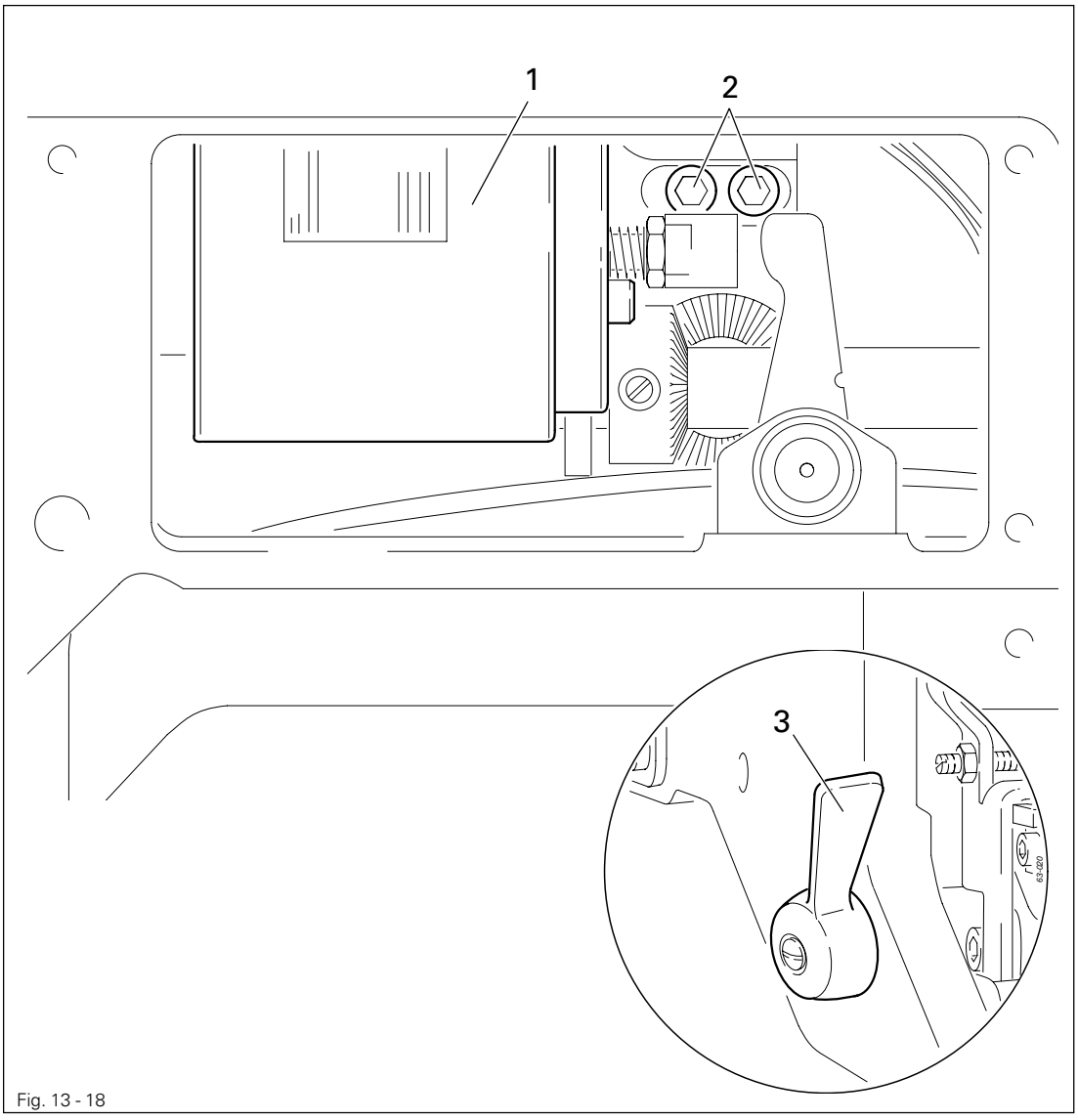

Fig. 13 - 18

- Move solenoid **1** (screws **2**) in accordance with the **requirement.**
- Turn the machine on and check the **requirement.**
- Turn the machine off.

Depending on the thickness of the material, the clearance between the roller-presser and the feed wheel can be increased to a maximum of **10 mm** by moving the solenoid **1** to the right.

13.04.19 Knee lever

Requirement

1. The knee lever must have a little play before the roller-presser is raised.
2. The lever for the roller-presser must drop automatically when the knee lever is pressed as far as it will go.
3. Bar **5** of the knee lever must be at an angle of approx. **75°** to the bedplate.

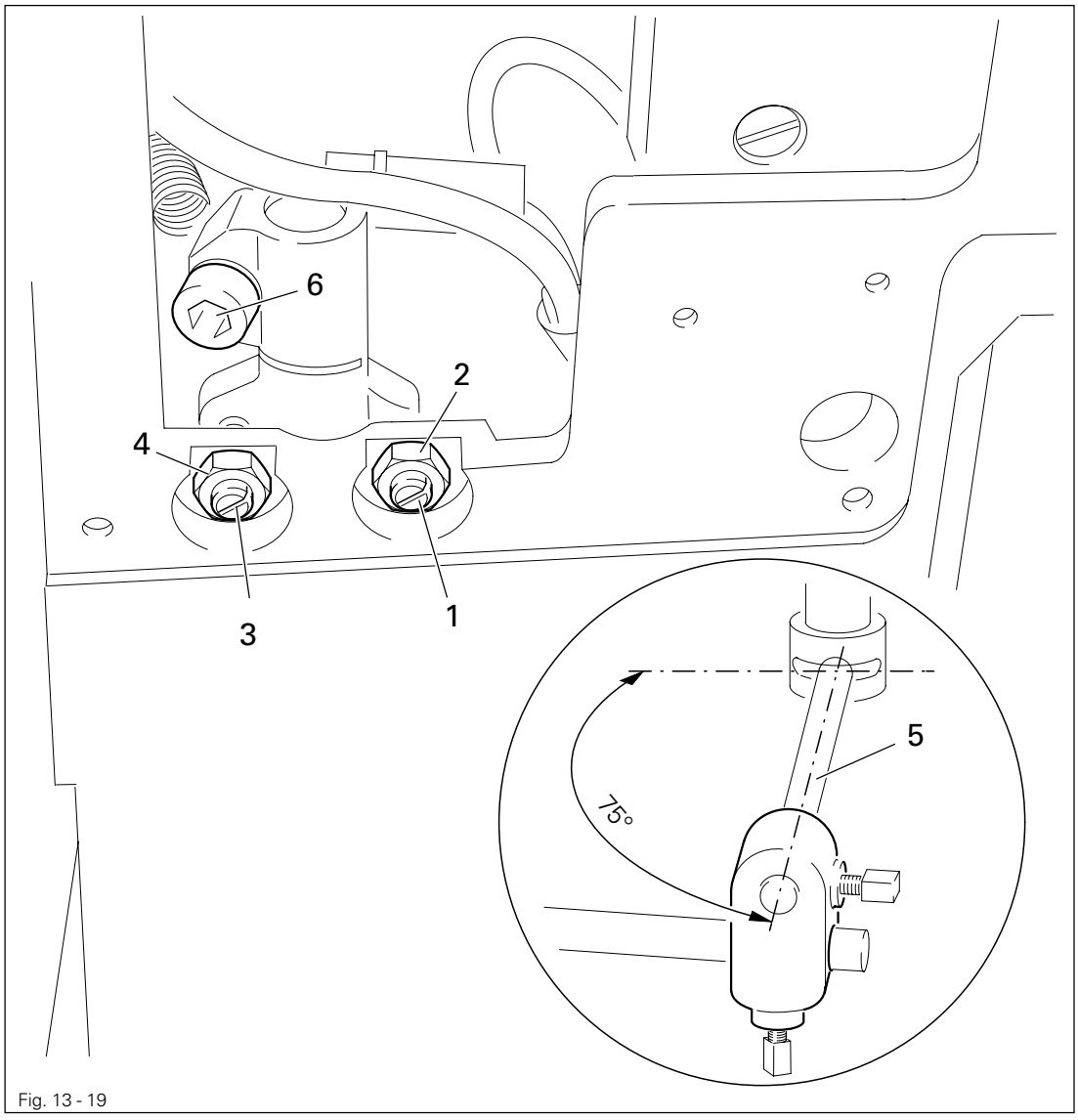

Fig. 13 - 19

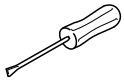

- Turn screw **1** (nut **2**) in accordance with **requirement 1**.
- Turn screw **3** (nut **4**) in accordance with **requirement 2.**
- Adjust bar **5** (screw **6**) in accordance with **requirement 3.**

13.04.20 Tension release

Requirement

The two tension disks **8** should be at least **0.5 mm** apart

1. when lever **1** is raised,
2. when the automatic presser foot lift is operated or
3. when solenoid **6** is pressed.

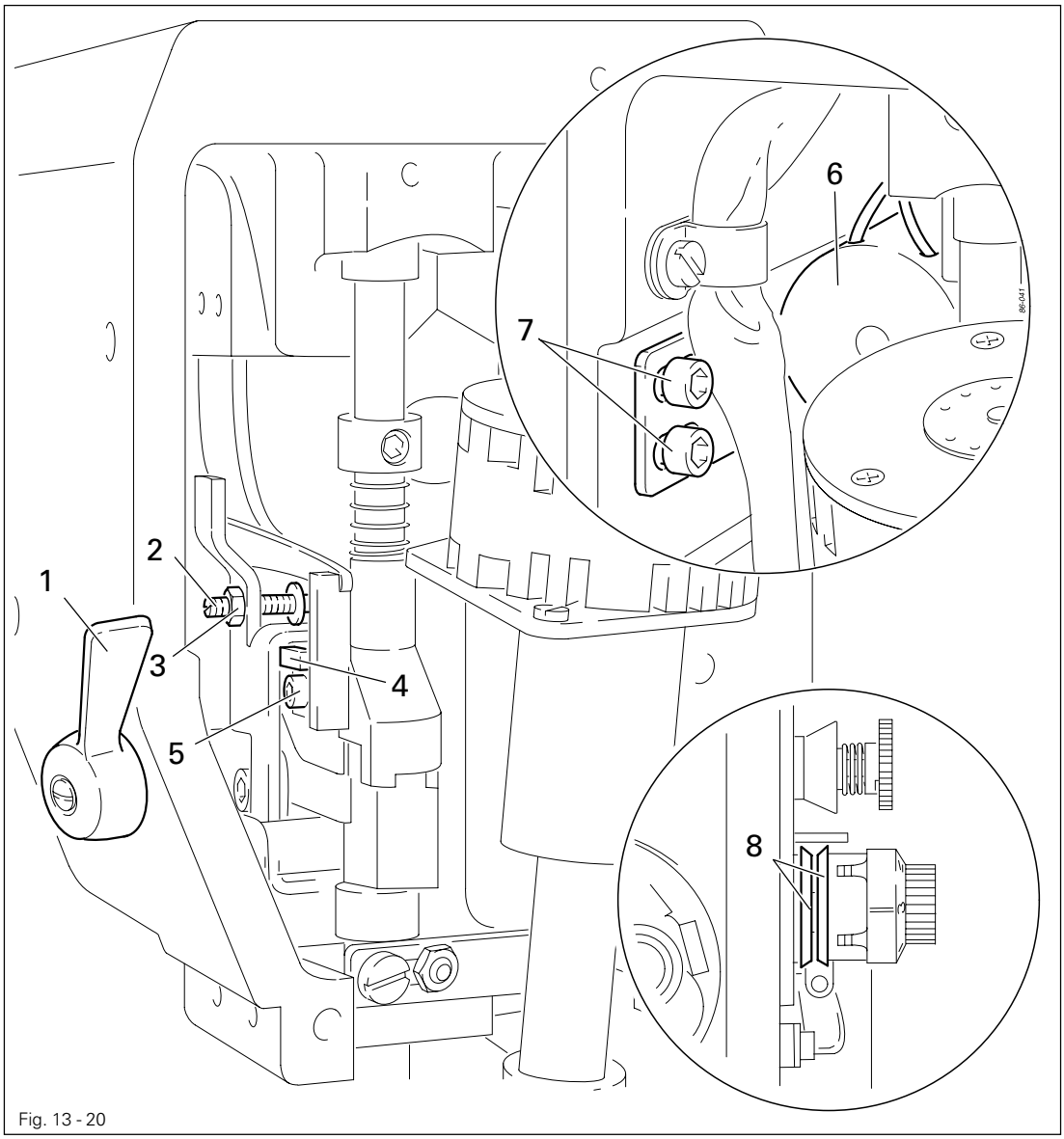

Fig. 13 - 20

- Raise lever **1** and adjust screw **2** (nut **3**) in accordance with **requirement 1.**
- Raise the roller presser with the automatic presser foot lift or with the knee lever and adjust catch **4** (screw **5**) in accordance with **requirement 2**.
- Press solenoid **6** as far as possible.
- Adjust solenoid **6** (screws **7**) in accordance with **requirement 3**.

The point of time when the tensioned is released by solenoids 6 can be set with the service functions, see **Chapter 13.08 Parameter settings**.

13.04.21 Thread check spring (PFAFF 1571 and 1591)

Requirement

1. The movement of thread check spring **7** should be completed when the needle point penetrates the fabric (spring stroke approx. **7 mm**).
2. When the largest thread loop is formed while the thread is passed around the hook, the thread check spring **7** should rise slightly from its support

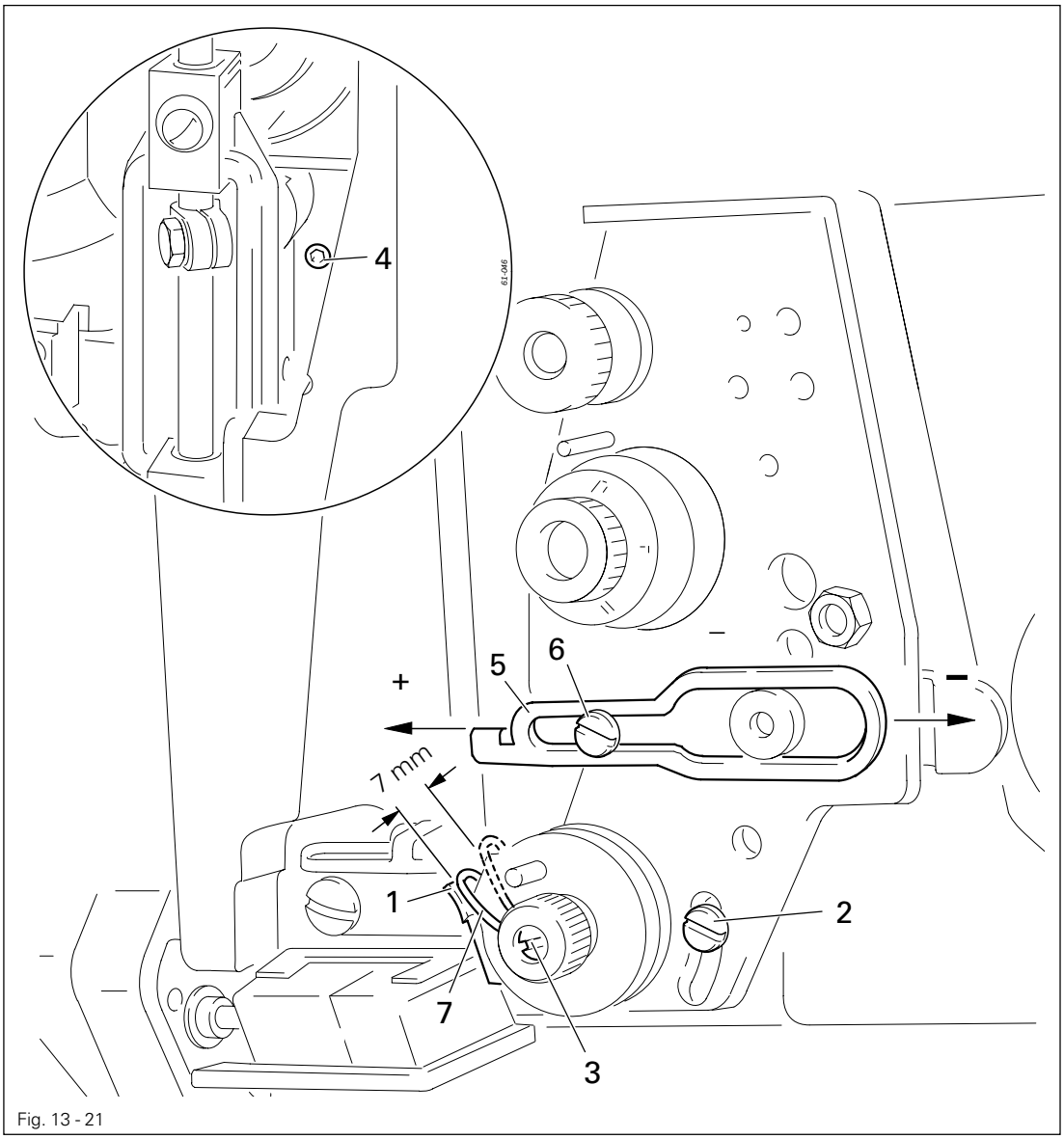

Fig. 13 - 21

- Adjust support **1** (screw **2**) according to **requirement 1.**
- To adjust the spring tension turn screw **3** (screw **4**).
- Adjust the thread regulator **5** (screw **6**) according to **requirement 2.**

For technical reasons it may be necessary to deviate from the specified spring stroke or spring tension.
Move the thread regulator **5** (screw **6**) towards "**+**" (= more thread) or "**-**" (= less thread).

13.04.22 Thread check springs (PFAFF 1574)

Requirement

1. The movement of thread check springs **3** and **6** should be completed when the needle points penetrate the fabric (spring stroke approx. **7 mm**).
2. When the largest thread loop is formed while the thread is passed around the hook, the thread check springs **3** and **6** should rise slightly from supports **1** and **9**.

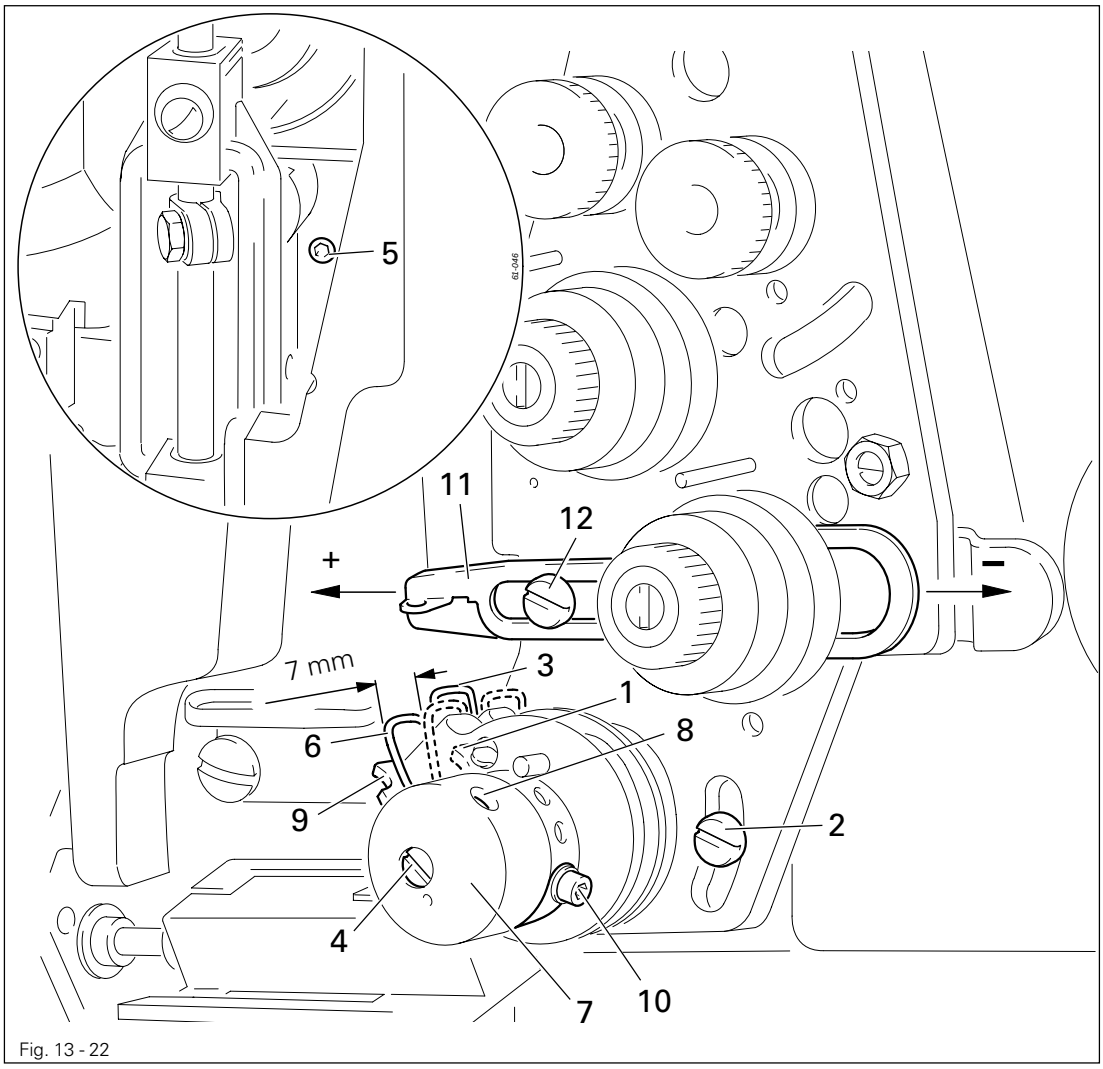

Fig. 13 - 22

- Adjust support **1** (screw **2**) according to **requirement 1**.
- To adjust the spring tension of thread check spring **3** turn screw **4** (screw **5**).
- To adjust the spring tension of thread check spring **6** turn bush **7** (screw **8**).
- Adjust support **9** (screw **10**) according to **requirement 1**. (If the adjustment range is too low, support **9** can be screwed into another hole).
- Adjust the thread regulator **11** (screw **12**) according to **requirement 2**.

For technical reasons it may be necessary to deviate from the specified spring stroke or spring tension.
Move the thread regulator **11** (screw **12**) towards "**+**" (= more thread) or "**-**" (= less thread).

13.04.23 Bobbin winder

Requirements

1. When the bobbin winder is engaged, the winding spindle must be driven reliably. When the bobbin winder is disengaged, the friction wheel **5** must not be moved by drive wheel **1.**
2. The bobbin winder must switch itself off, when the filled thread is about **1 mm** from the edge of the bobbin.

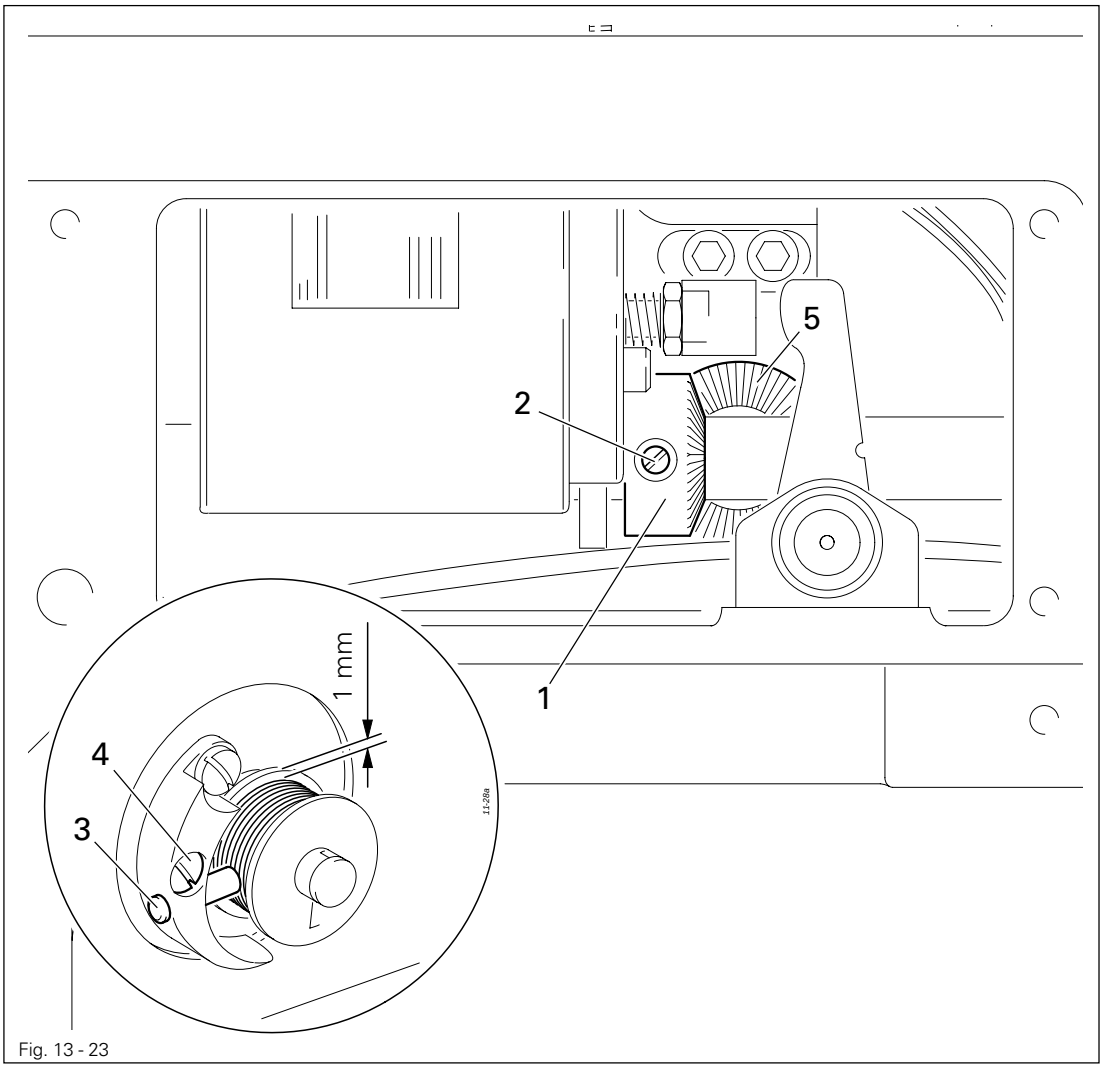

Fig. 13 - 23

- Position drive wheel **1** (screws **2**) according to **requirement 1**.
- Position bolt **3** (screw **4**) according to **requirement 2**.

13.04.24 Roller-presser pressure

Requirement
The material must be fed reliably. No pressure marks may be made on the material.

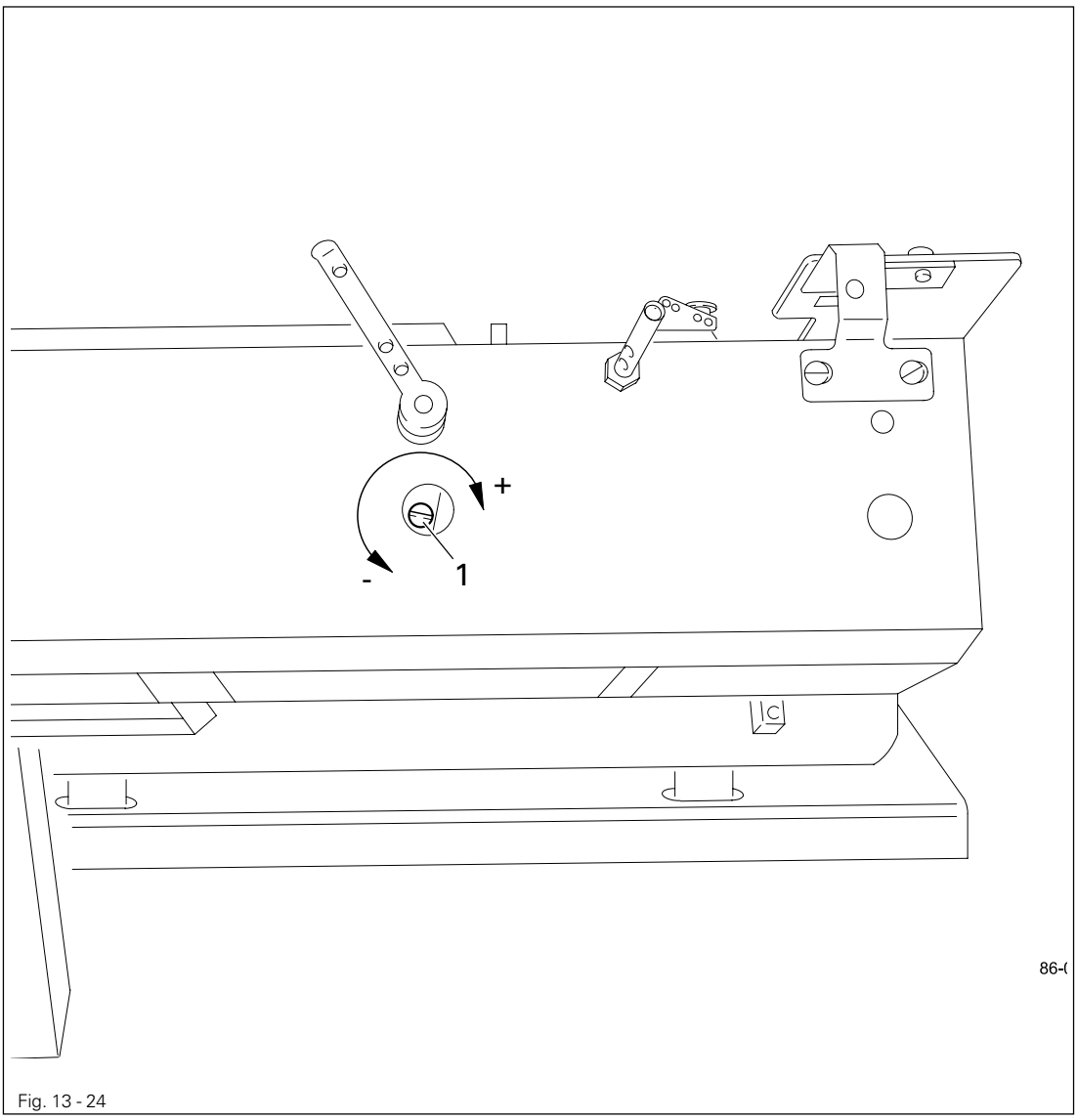

Fig. 13 - 24

- Adjust the presser foot pressure with screw **1** in accordance with the **requirement**.

Screw **1** is located under a cover.

If the presser foot pressure is low, the lowering speed of the presser foot can be increased with parameter **„202“**, see **Chapter 13.08 Parameter settings**.

13.04.25 Lubrication

Requirement
After a running time of 10 seconds a fine line of oil should form on a strip of paper held next to the hook.

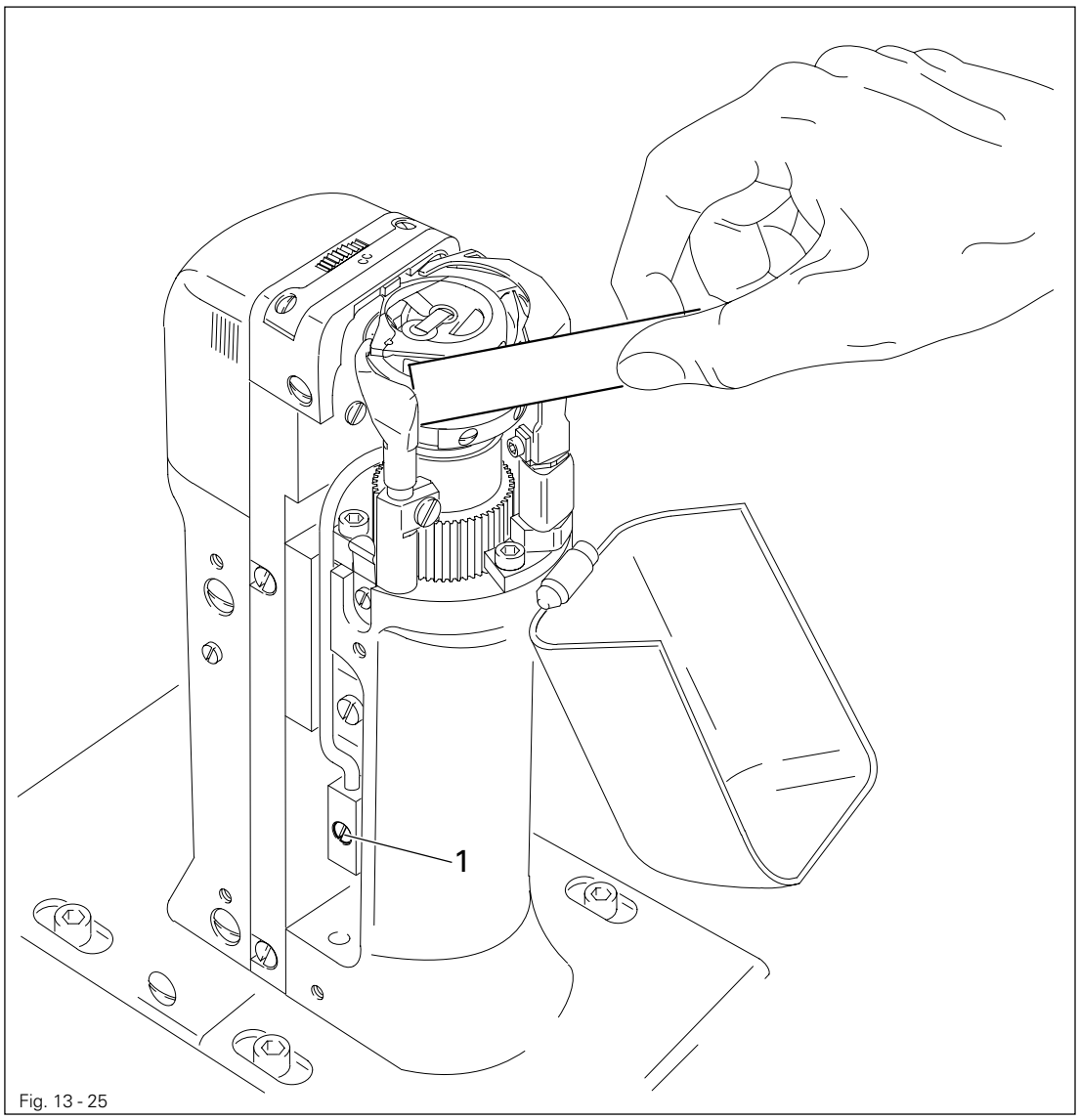

Fig. 13 - 25

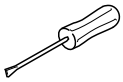

- Check whether oil has been filled in and that there is no air in the oil lines.
- Let the machine run for **2-3 min.**.



While the machine is running do not place hands in the needle or hook area!
Danger of injury from moving parts!

- With the machine running hold a strip of paper on the hook and check the **requirement.**
- If necessary, adjust the oil flow on screw **1**.

13.04.26 Re-engage safety coupling

The coupling **1** is set by the manufacturer. When the thread jams, the coupling **1** disengages in order to avoid damage to the hooks.
A description of how to engage the coupling follows.

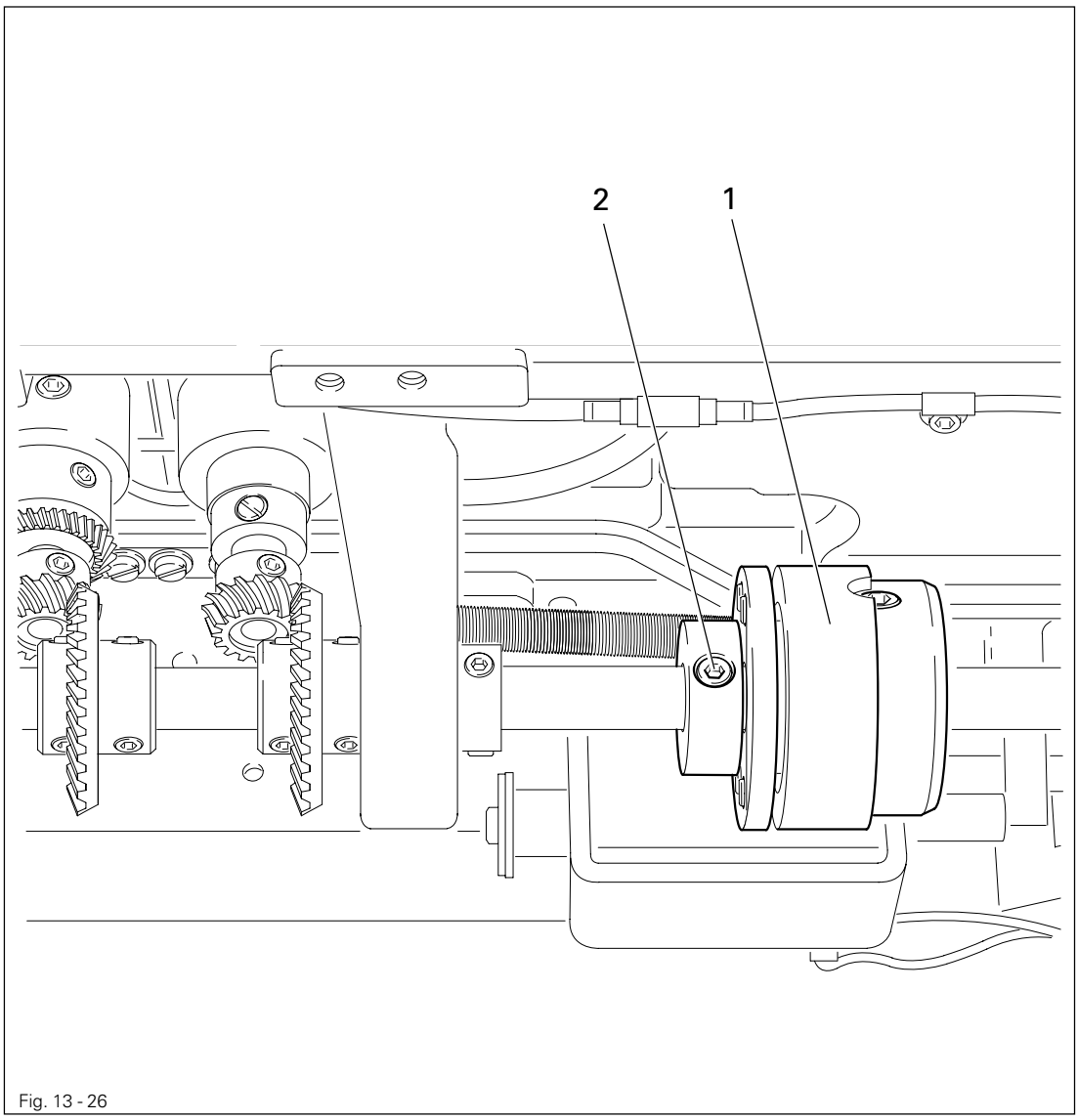

Fig. 13 - 26

- Remove jammed thread.
- Hold coupling **1** with screw **2** and turn the balance wheel, until you feel coupling **1** snap back into place again.

13.05 Adjusting the edge trimmer -725/04

13.05.01 Position of the knife holder on model 1571

Requirements

When the thread trimmer is engaged and the adjusting wheel has been turned to its highest position

1. the knife holder **2** must be parallel to the post and
2. the top edge of the needle plate must be in the centre of the angular knife opening.

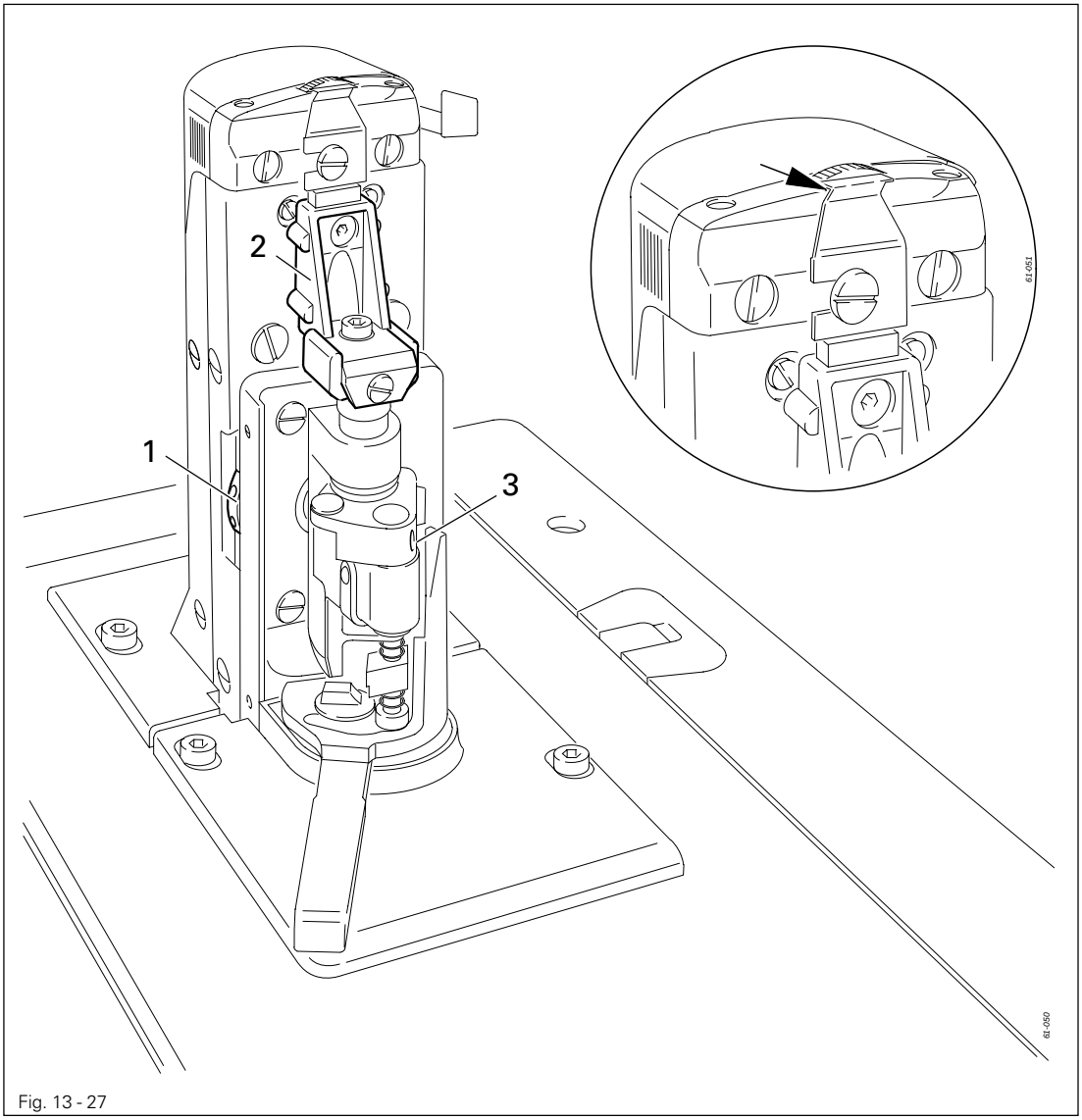

Fig. 13 - 27

- Turn the adjusting wheel **1** to its highest position and engage edge trimmer.
- Adjust knife holder **2** (screw **3**) according to the **requirements**.

13.05.02 Position of the knife holder on models 1574 and 1591

Requirement
When the thread trimmer is engaged, the centre of the angular knife opening must be level with the top edge of the needle plate.

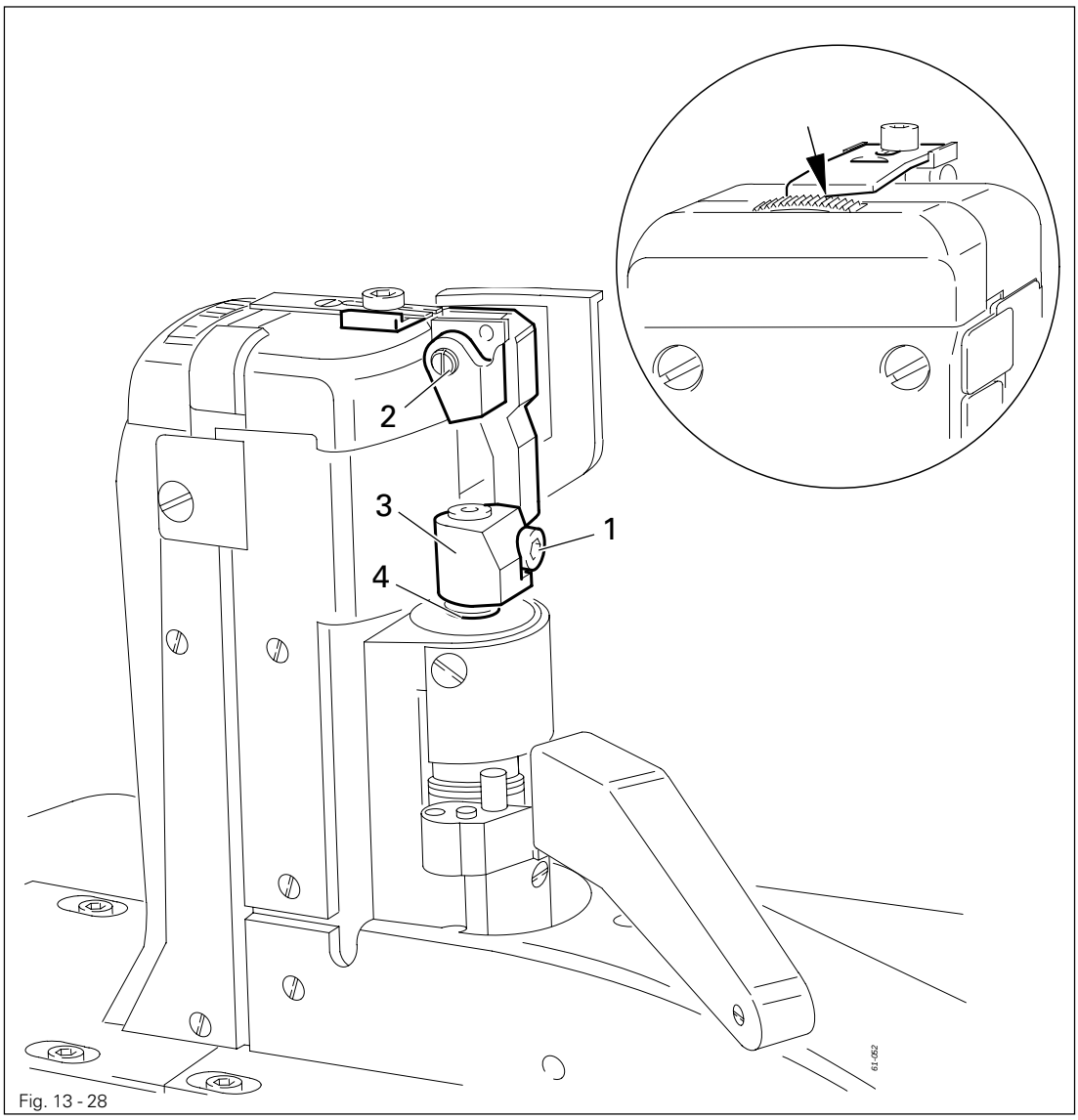

Fig. 13 - 28

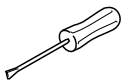

- Switch off the machine and engage the edge trimmer.
- Loosen screw **1**.
- By turning sccentric **2**, position the knife in the centre of its adjustment range.
- Adjust knife holder **3** according to the **requirement** and tighten screw **1**.
- Position locking ring **4** on the knife holder **3**.



Depending on the material thickness, changes in the basic setting of eccentric **2** are possible.

13.05.03 Knife stroke on model 1571

Requirement
The knife stroke can be adjusted over a range from 1.0 to 3.5 mm, allowing the best possible adaption to all materials used.

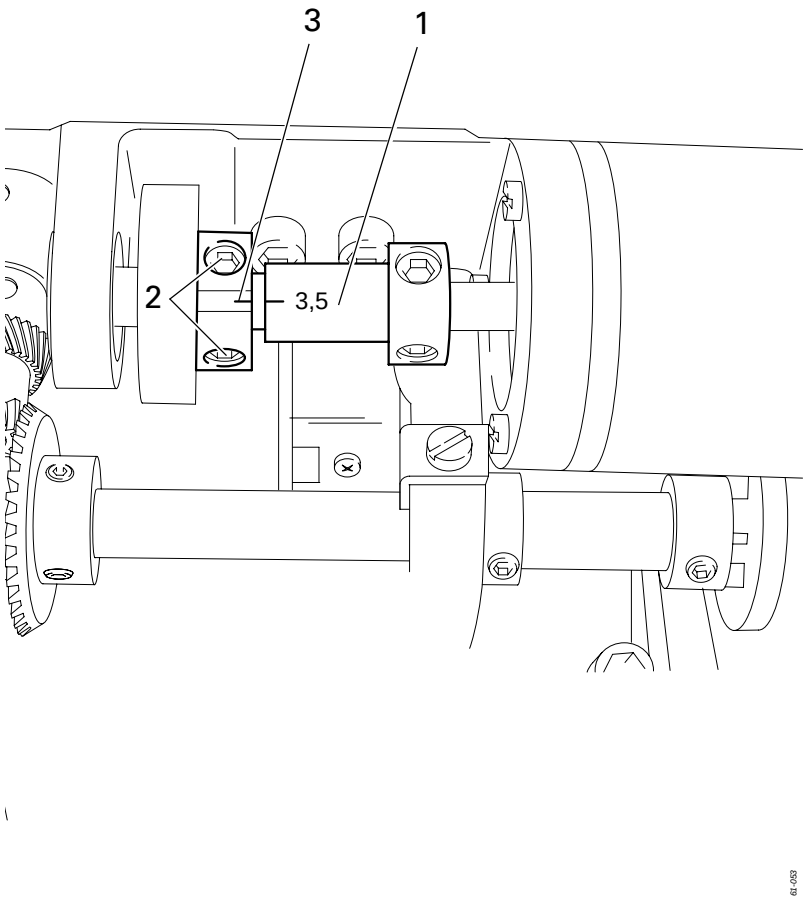

Fig. 13 - 29

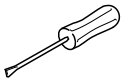

- Turn eccentric **1** (screws **2**) so that the marking of the desired cutting stroke is opposite the marking on clamp collar **3**.

13.05.04 Knife stroke on models 1574 and 1591

Requirement
The knife stroke can be adjusted over a range from **2.0** to **3.5 mm**, allowing the best possible adaption to all materials used.

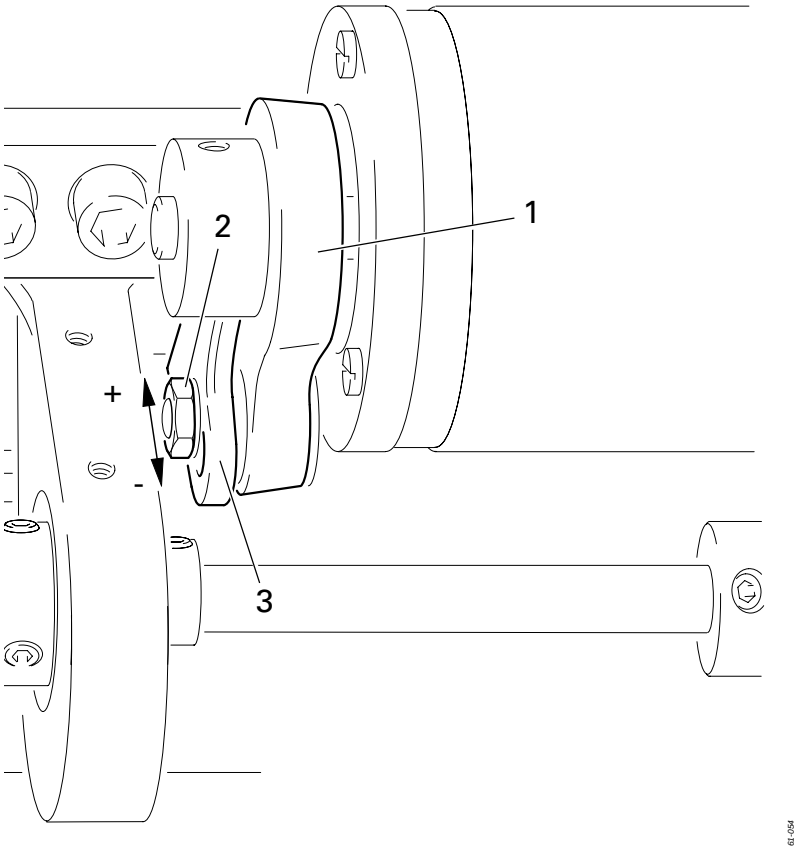

Fig. 13 - 30

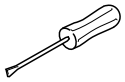

- Adjust crank **1** (nut **2**) in slotted lever **3** according to the **requirement**.

13.05.05 Cutting stroke on model 1571

Requirement
When the edge trimmer is engaged and the needle is in the needle hole, the stroke of knife **1** should be half in front of and half behind the needle, when the motor shaft is turned by hand.

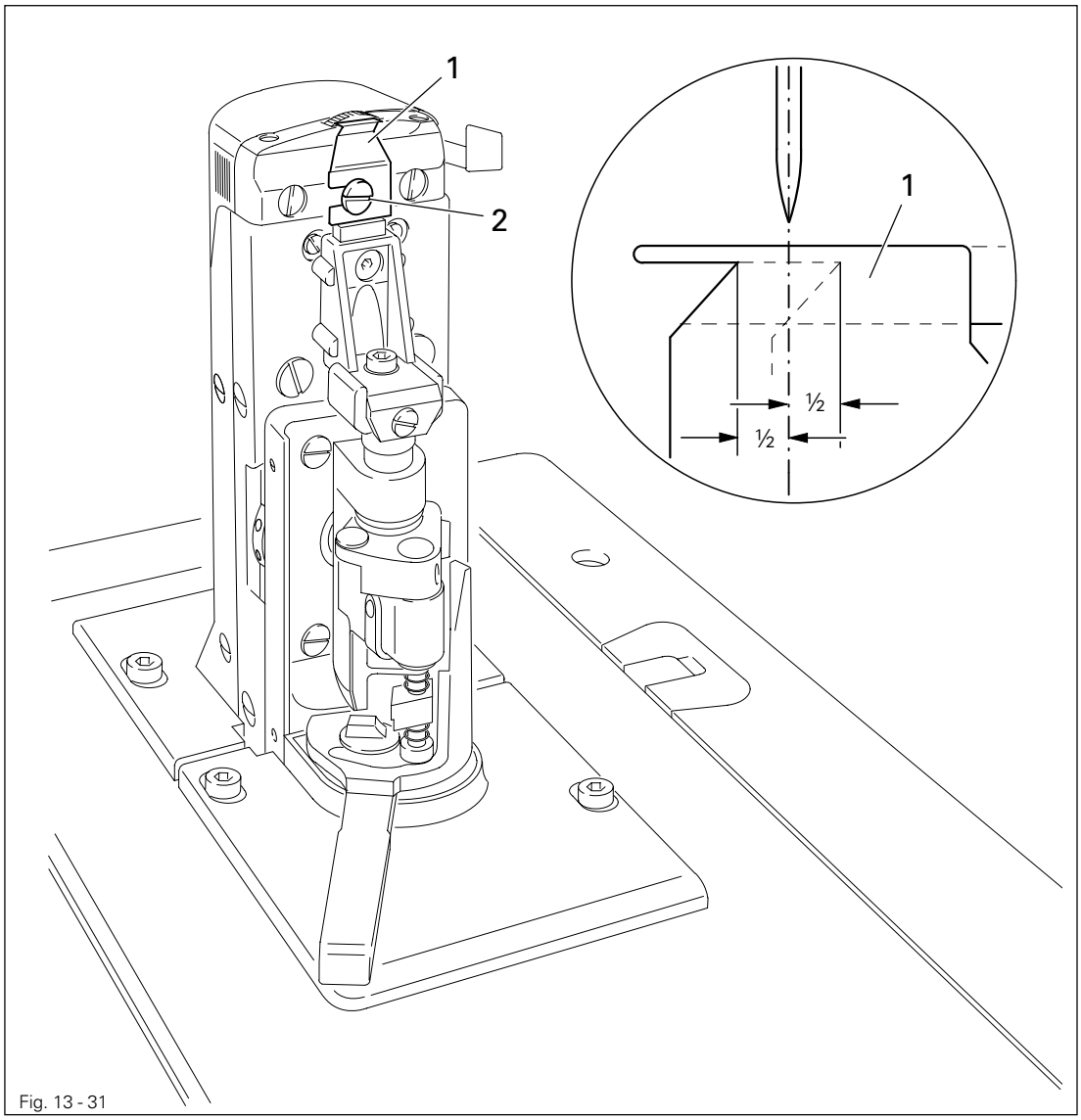

Fig. 13 - 31

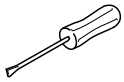

- Switch off the machine and engage the edge trimmer.
- Adjust knife **1** (screw **2**) according to the **requirement**.

13.05.06 Cutting stroke on models 1574 and 1591

Requirement
When the edge trimmer is engaged and the needle is in the needle hole, the stroke of knife **3** should be half in front of and half behind the needle, when the motor shaft is turned by hand.

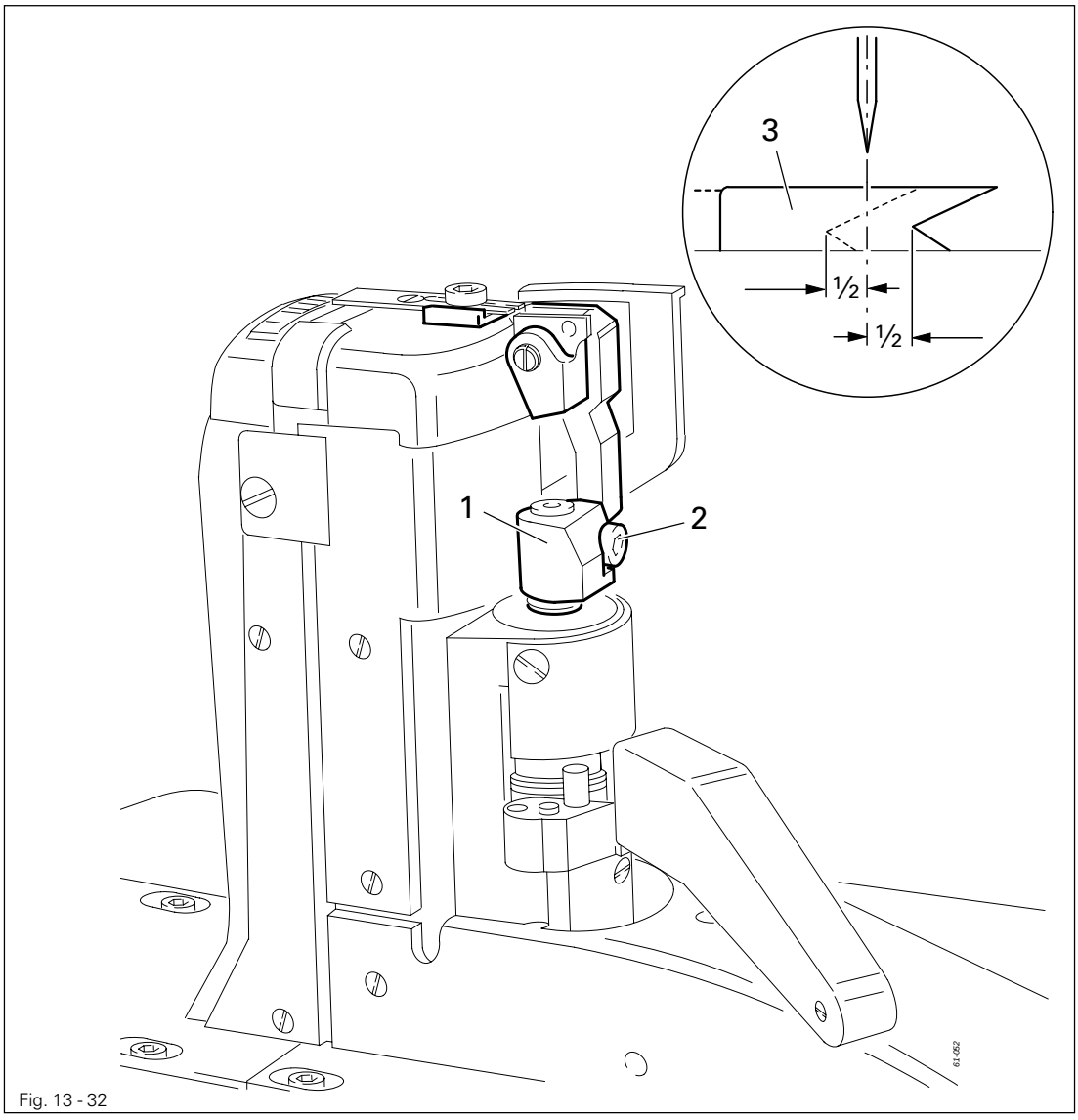

Fig. 13 - 32

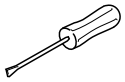

- Switch off the machine and engage the edge trimmer.
- Adjust knife holder **1** (screw **2**) according to the **requirement**.

13.05.07 Knife position

Requirement
When the edge trimmer is engaged, the knife should rest lightly on the needle plate insert, but no whistling sound should occur during trimming.

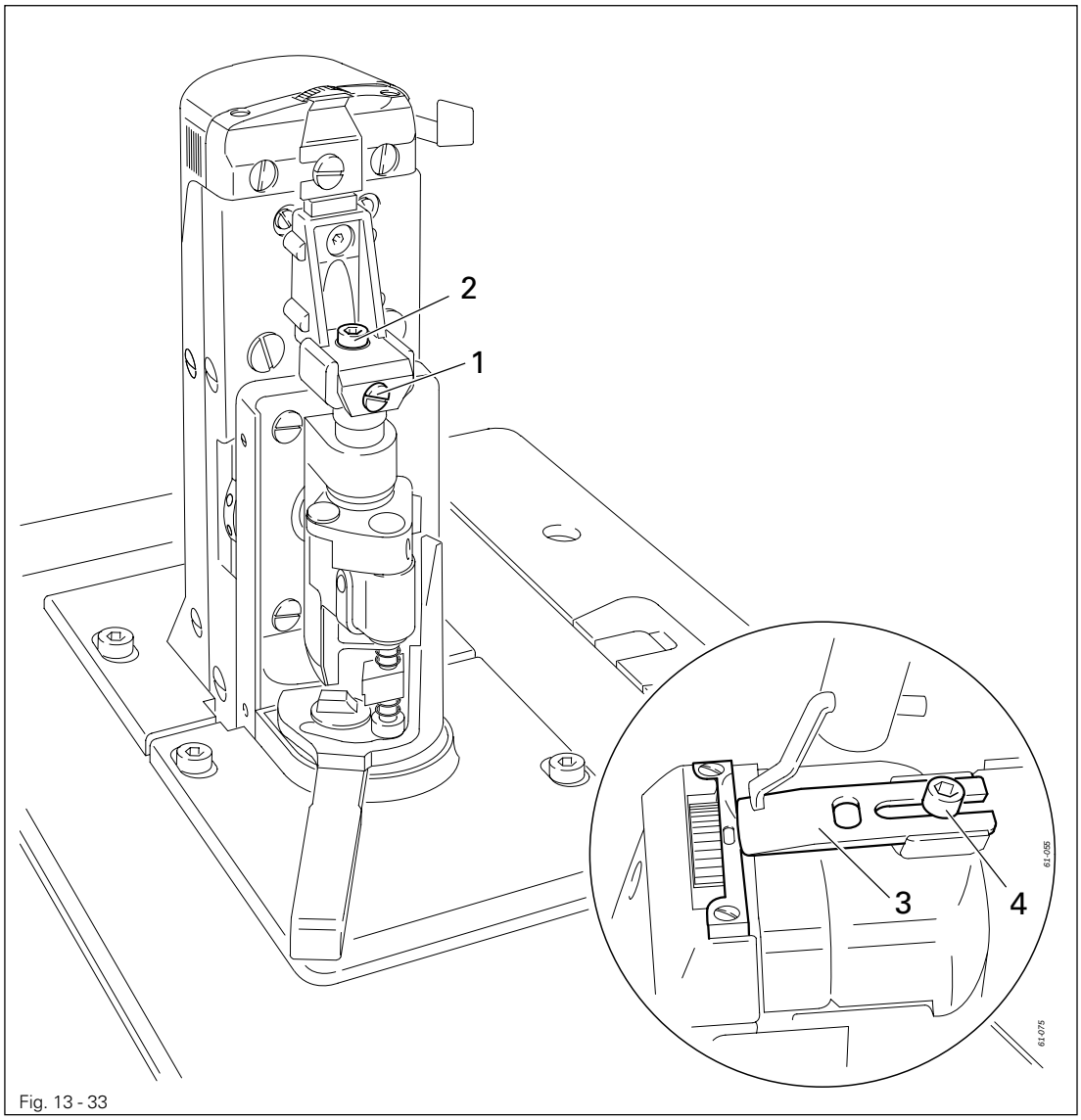

Fig. 13 - 33

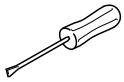

1571

- Adjust screw **1** (screw **2**) according to the **requirements**.
- Carry out a cutting test and repeat adjustment if necessary.

1574 and 1591

- Adjust knife **3** (screw **4**) according to the **requirements**.
- Carry out a cutting test and repeat adjustment if necessary.

13.06 Adjusting the thread trimmer -726/05 on model 1591

13.06.01 Position of the knife to the needle plate

Requirement
When the edge trimmer is engaged, the knife **2** must be parallel to the needle plate insert.

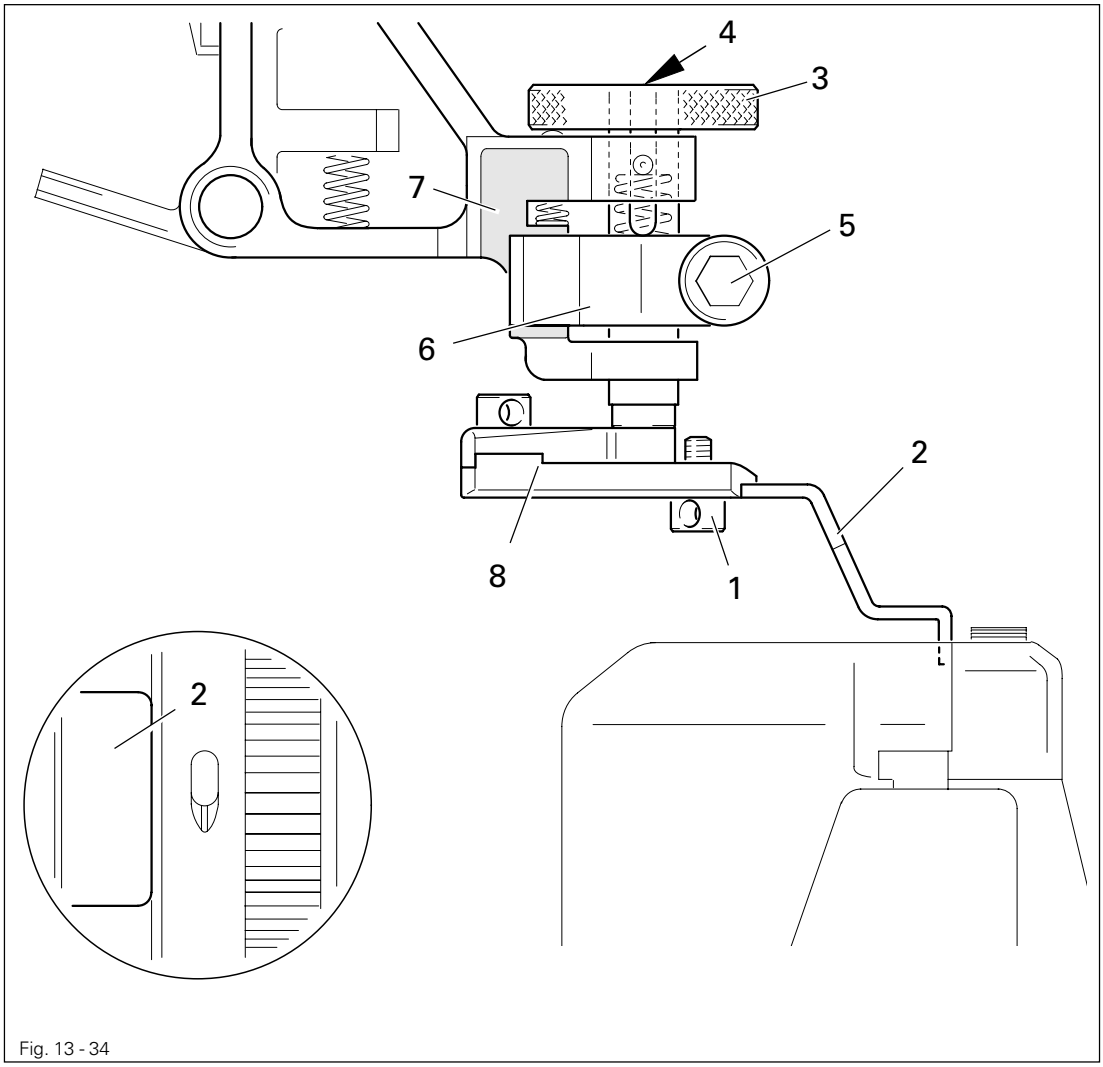

Fig. 13 - 34

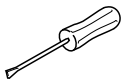

- Switch off the machine and engage the edge trimmer.
- Loosen screw **1** and push back knife **2** slightly.
- Turn milled screw **3** until its top edge is flush with the top edge of the cylindrical guide **4.**
- Loosen screw **5**, position guide **6** in the centre of guide **7** and slightly tighten screw **5**.
- Adjust knife holder **8** according to the **requirement** and tighten screw **5**.



Screw **1** remains loosened for further adjustments.

13.06.02 Knife position crosswise to sewing direction

Requirement
When the edge trimmer is engaged, knife **2** must be vertical and rest lightly on the needle plate insert.

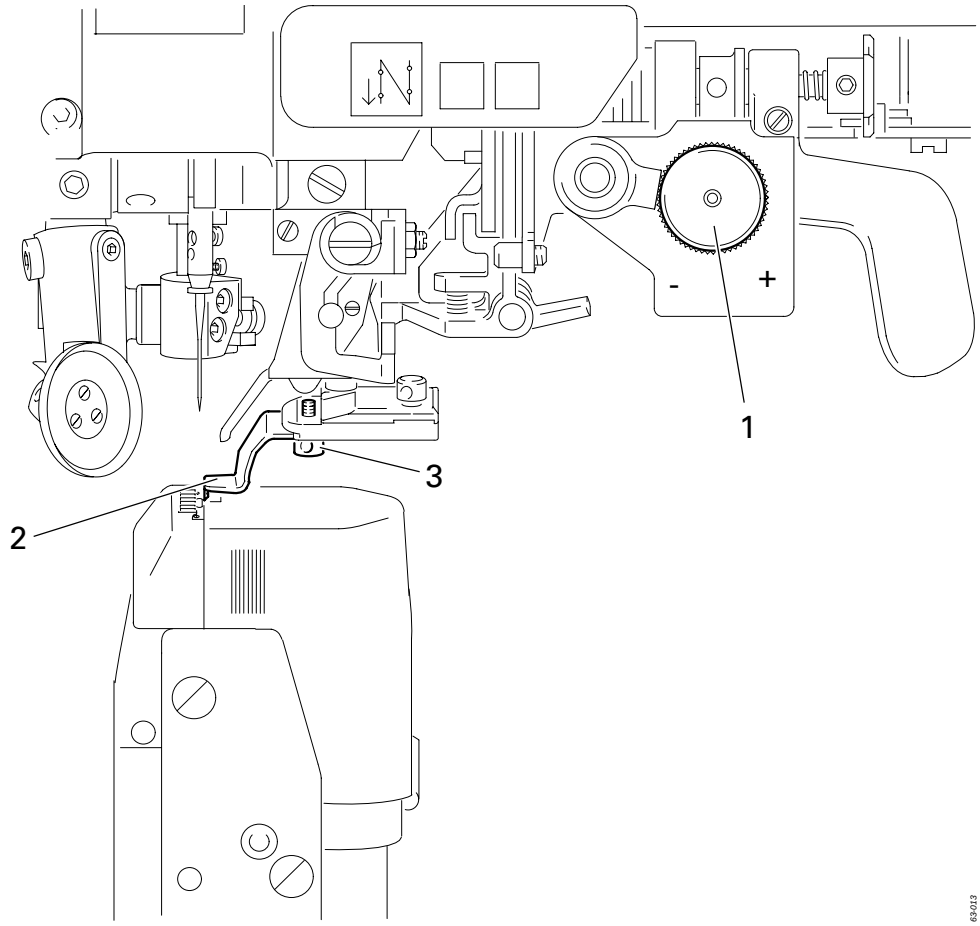

Fig. 13 - 35

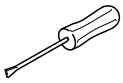

- Switch off the machine and engage the edge trimmer.
- Bring the knife into a vertical postion by turning milled screw **1.**
- Bring knife **2** into light contact with the needle plate insert and tighten screw **3**.

The cutting pressure can be adapted to the material used with milled screw **1**.

13.06.03 Knife height

Requirement
When the edge trimmer is engaged, the centre of the angular knife opening must be at the same height as the upper edge of the needle plate.

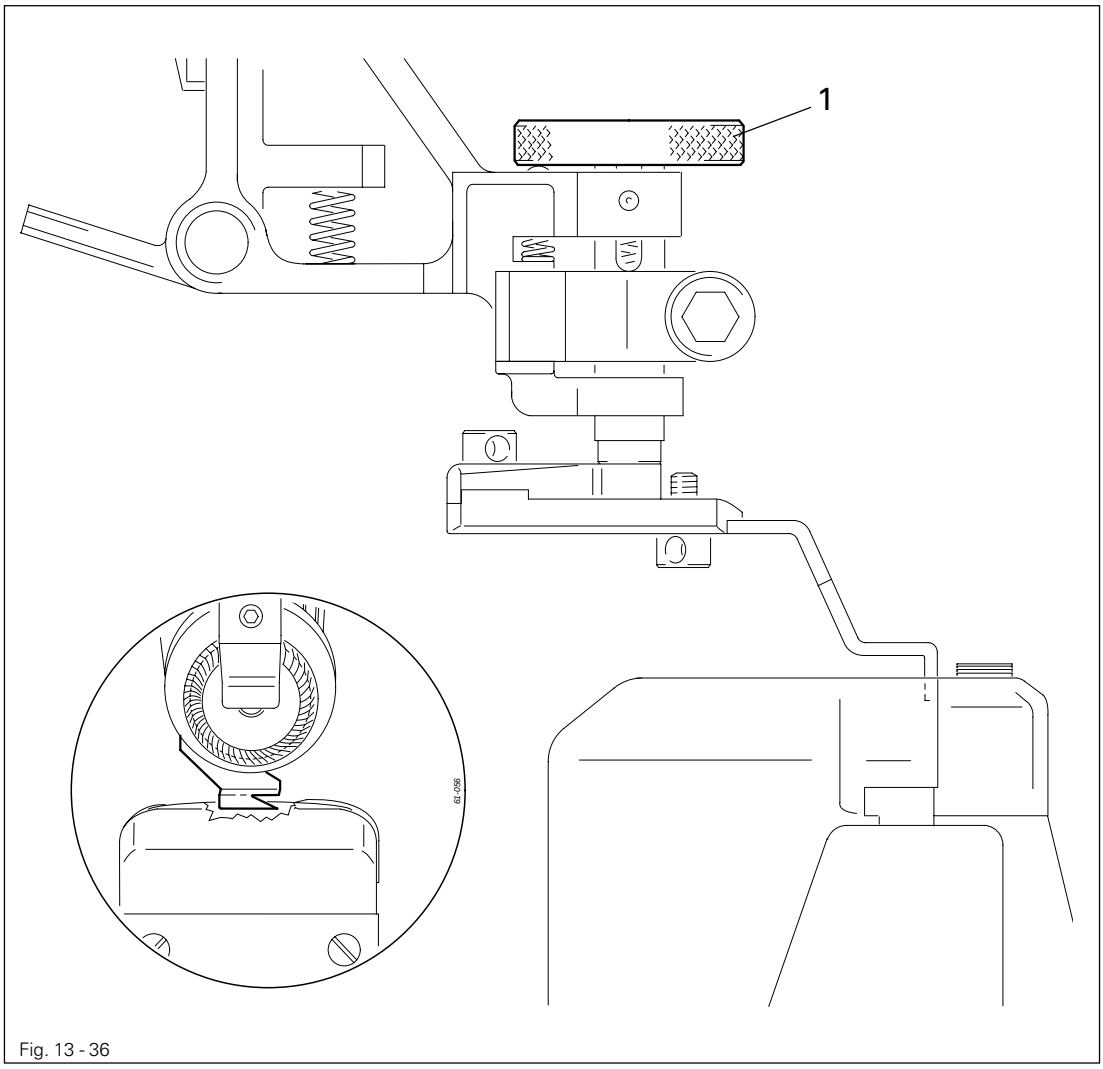

Fig. 13 - 36

- Switch off the machine and engage the edge trimmer.
- Adjust milled screw **1** according to the **requirement.**

The basic setting may be changed depending on the material thickness.

13.06.04 Cutting stroke

Requirement
When the edge trimmer is engaged and the needle is in the needle hole, the stroke of knife **3** should be half in front of and half behind the needle, when the motor shaft is turned by hand.

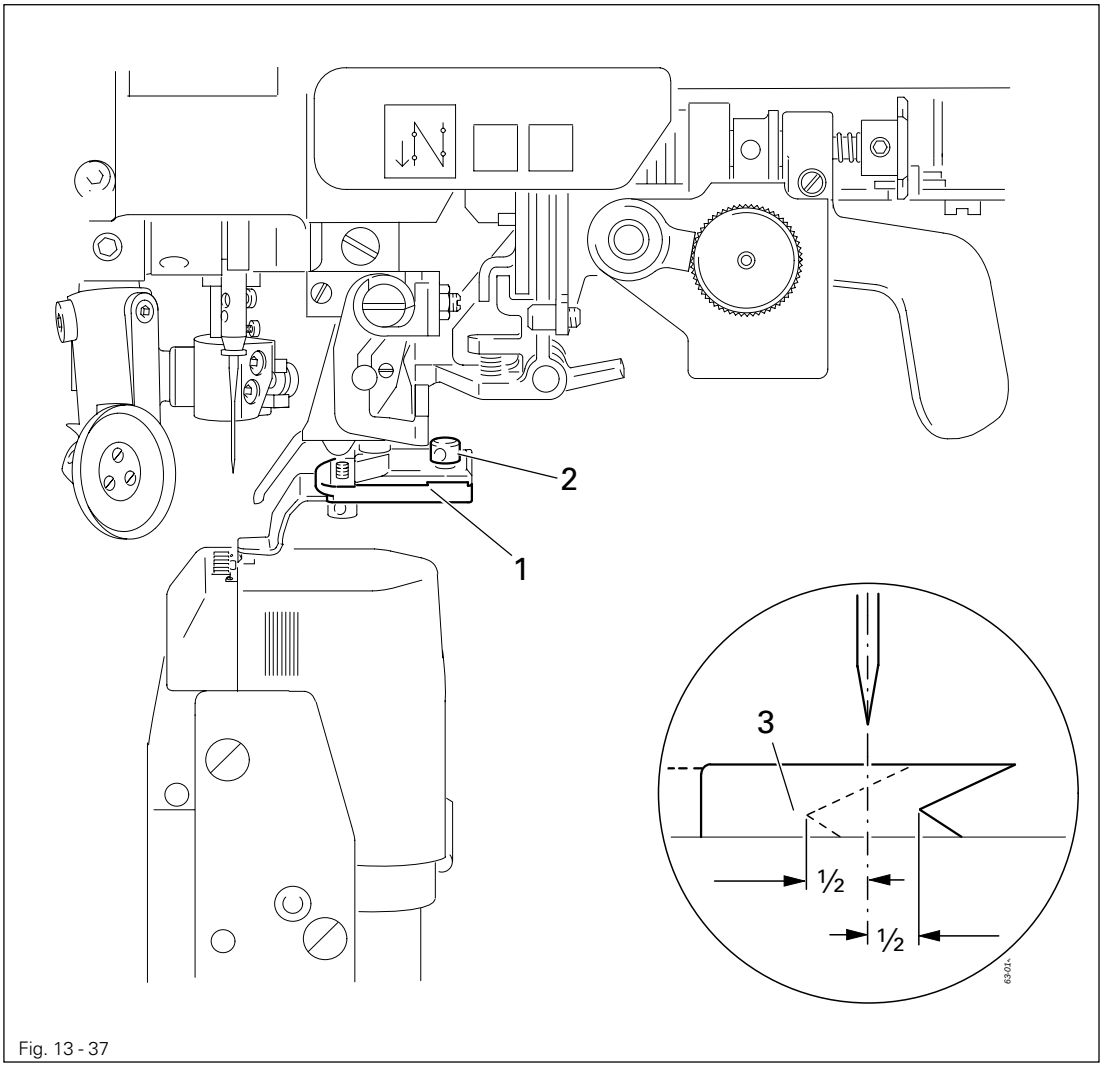

Fig. 13 - 37

- Switch off the machine and engage the edge trimmer.
- Adjust knife holder **1** (screw **2**) according to the **requirement**.

13.06.05 Knife stroke

Requirement
The knife stroke can be adjusted over a range from **1.0** to **3.5 mm**, allowing the best possible adaption to all materials used.

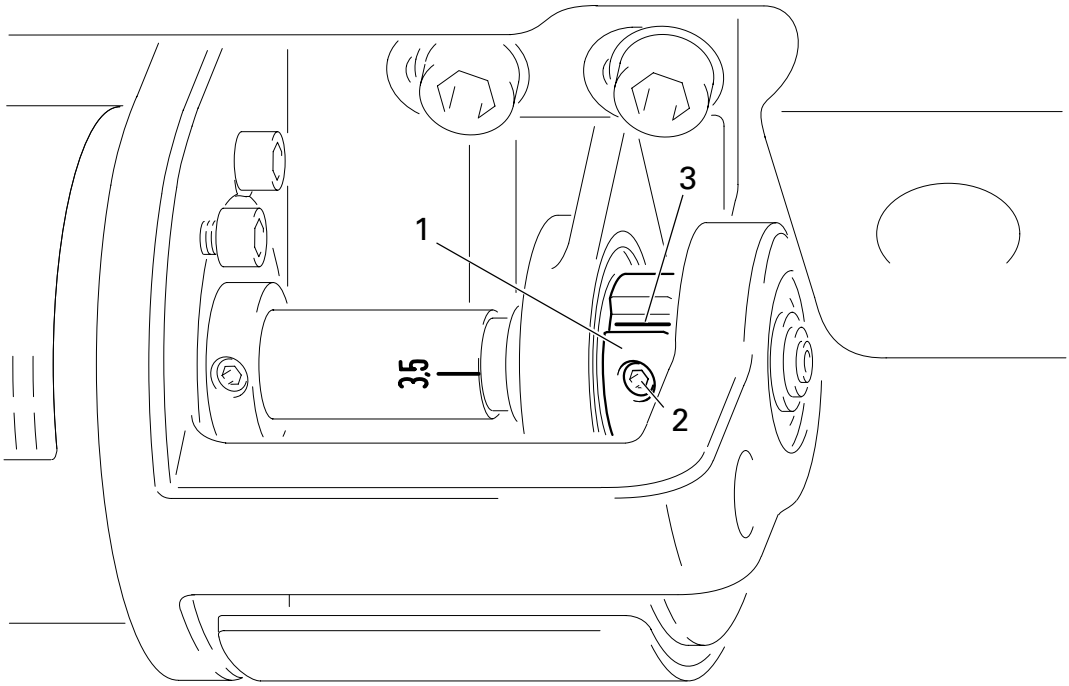

Fig. 13 - 38

- Turn eccentric **1** (screws **2**) on the back of the sewing head so that the marking of the desired cutting stroke is opposite marking **3**.

13.07 Adjusting the thread trimmer -900/81

13.07.01 Resting position of the roller lever / radial position of the control cam

Requirement

1. When the thread trimmer is in is resting position, lever **5** should be touching piston **6** and the roller of roller lever **7** should be **0.3 mm** away from control cam **3**.
2. When the take-up lever is at t.d.c., control cam **3** should just have placed roller lever **7** in its resting position.

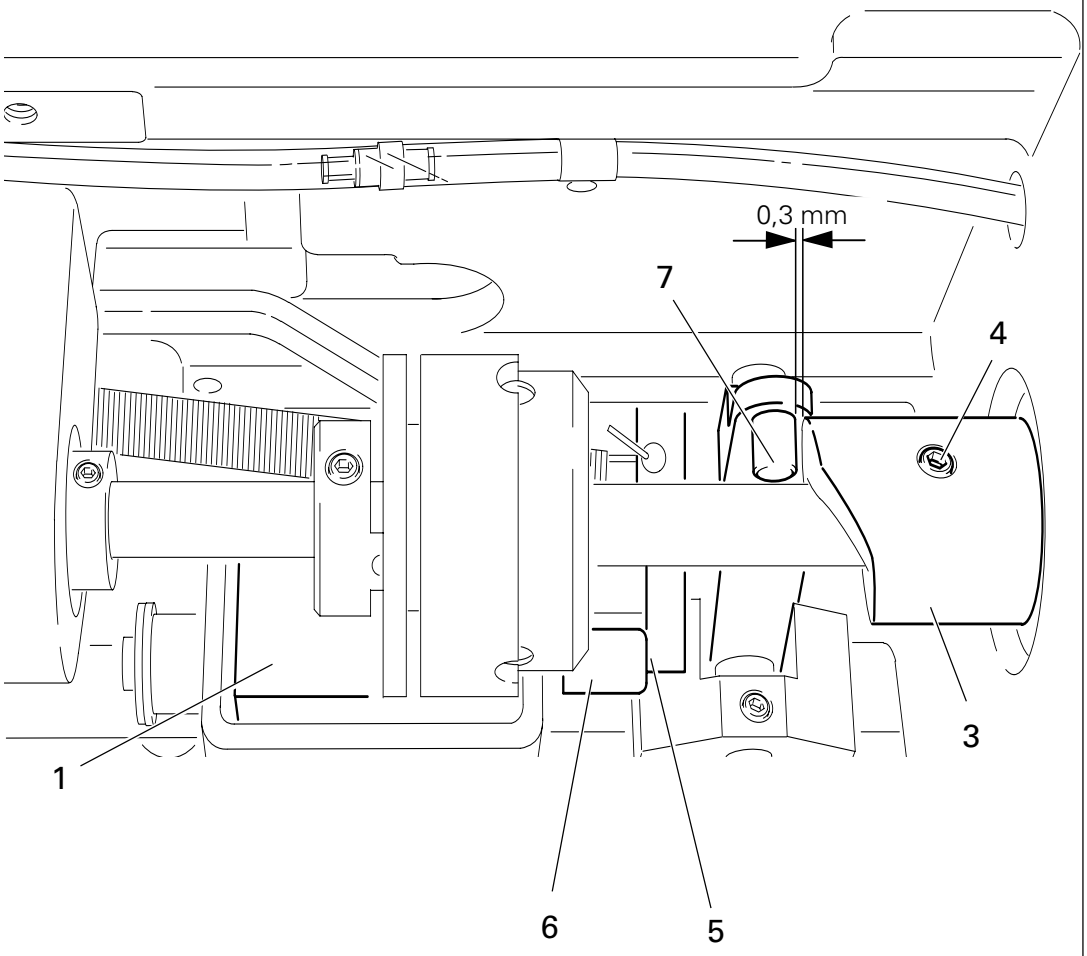

Fig. 13 - 39

- Having made sure that piston **6** is positioned against the left stop, adjust magnet **1** (2 screws) in accordance with **requirement 1**.
- Adjust control cam **3** (screws **4**) in accordance with **requirement 2**.

13.07.02 Position of the thread catcher holder

Requirement

1. There should be a minimum amount of play between toothed wheel **3** and toothed segment **4**.
2. Both in the neutral position and the foremost position of the catcher, the distance between the toothed segment **4** and the outer edge of the thread catcher holder **1** should be the same (see arrow).

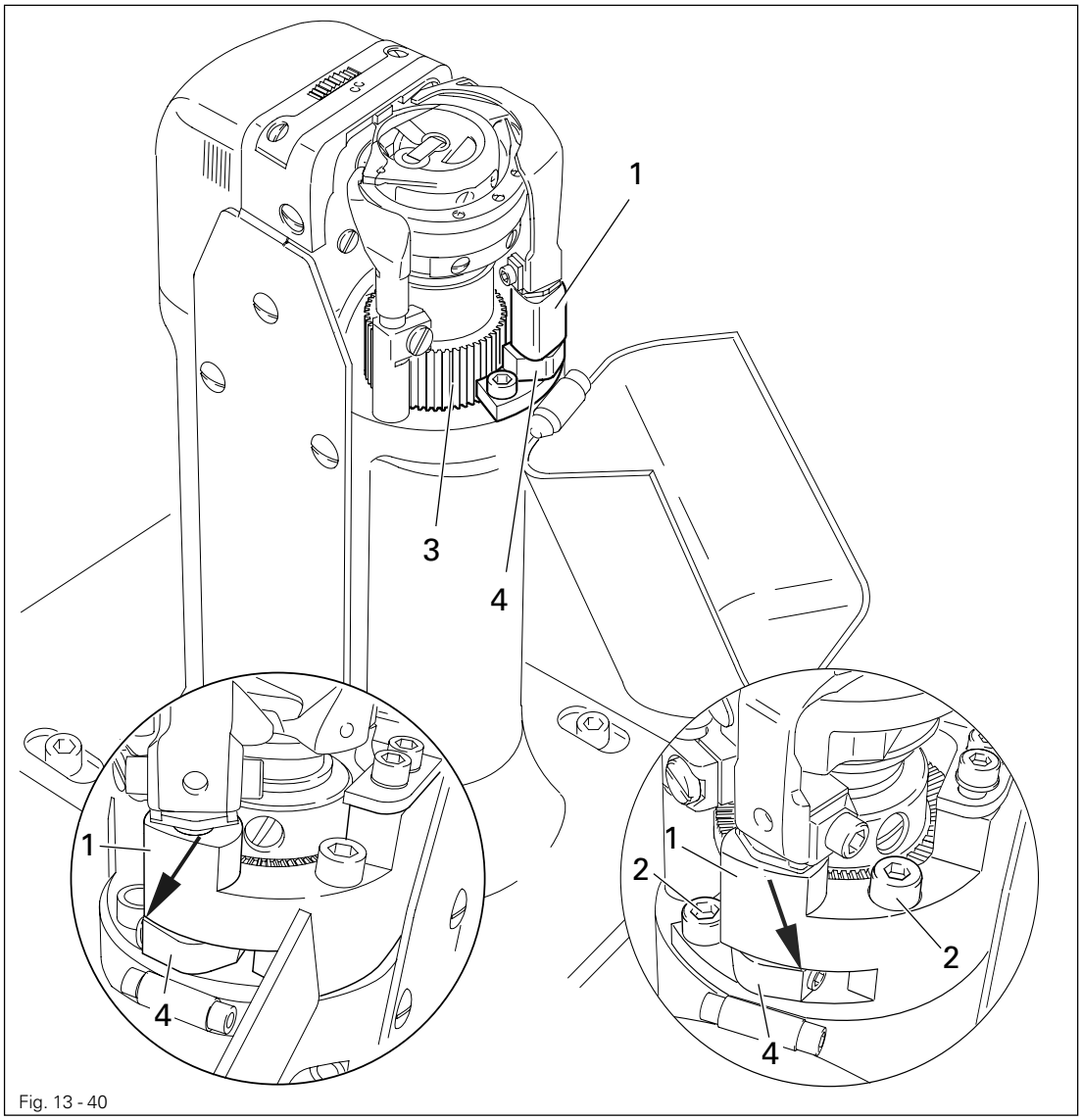

Fig. 13 - 40

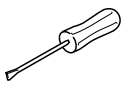

- Adjust the thread catcher holder **1** (screws **2**) according to the **requirements.**



If requirement 2 cannot be fulfilled, loosen screw **2** and move the toothed segment **4** by one tooth.

13.07.03 Distance between thread catcher and needle plate

Requirement
During its swivel movement thread catcher **1** should not pass the edge of the needle plate (see arrow).

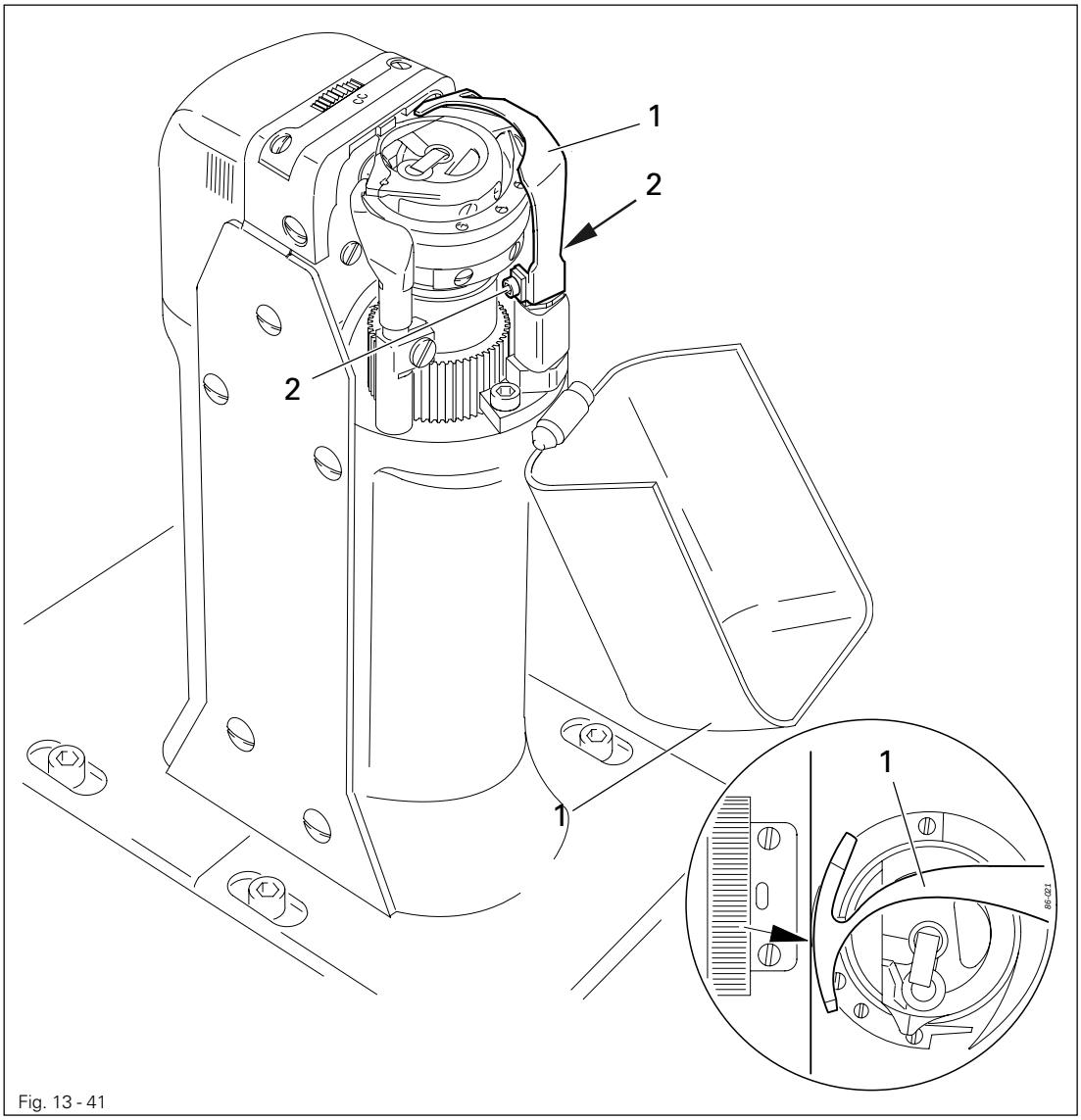

Fig. 13 - 41

- Move thread catcher **1** (screws **2, two screws**) parallel to the thread catcher holder in accordance with the **requirement**.

13.07.04 Position of the thread catcher

Requirement

1. The bottom edge of the thread catcher **1** should be at a distance of **0.1 mm** from the positioning finger of the bobbin case **5**.
2. When the thread trimmer is in its neutral position, the rear edge of thread catcher should be positioned **approx. 2.5 - 3 mm** behind the edge of the knife.

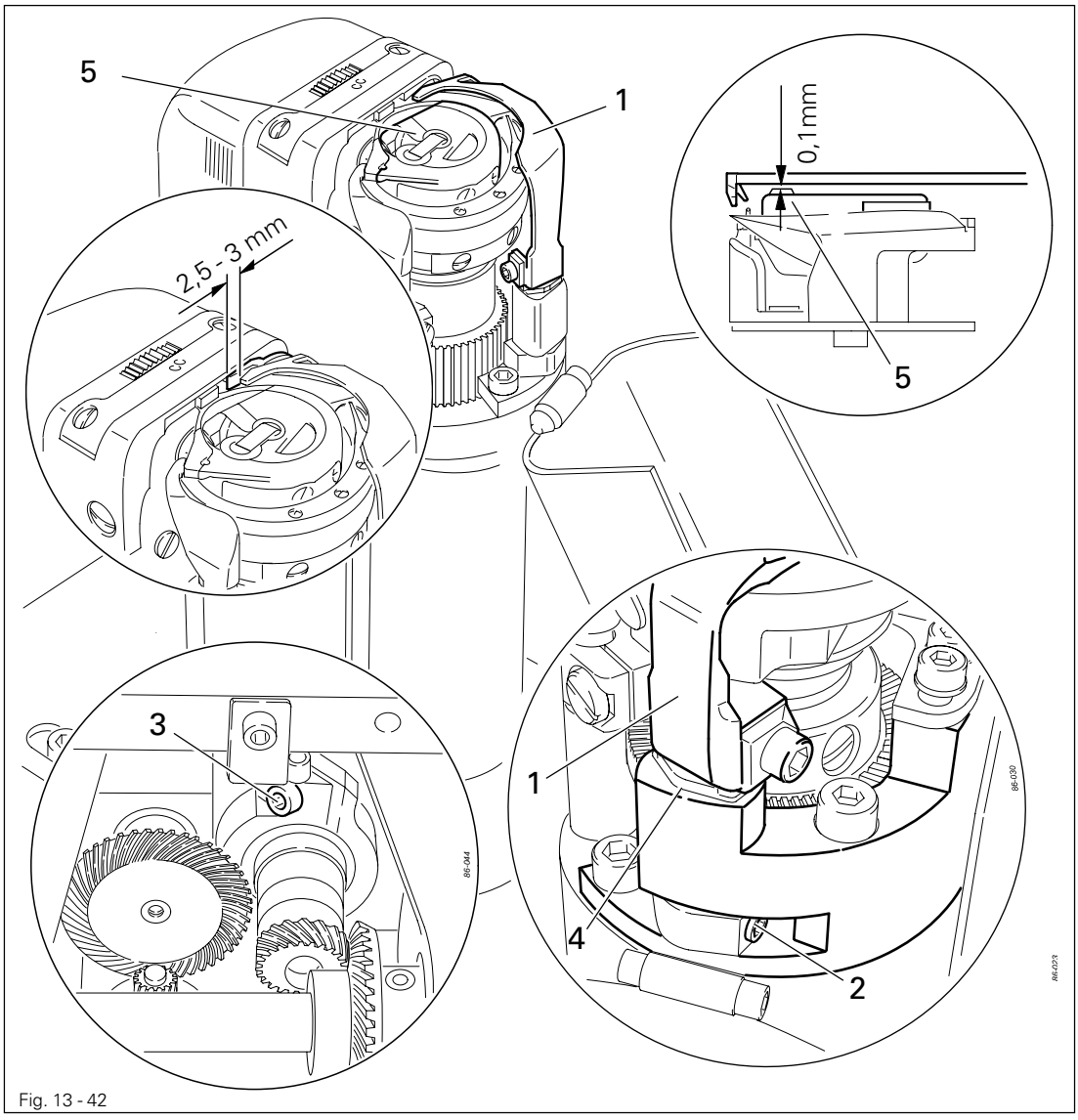

Fig. 13 - 42

- Move thread catcher **1** (screws **2**, **two screws**) in accordance with **requirement 1**.
- Turn thread catcher **1** (screw **3**) in accordance with **requirement 2**.

Thread catcher **1** must be parallel to the surface of the thread catcher holder **4**.

13.07.05 Knife position and knife pressure

Requirement

1. The knife **1** should be touching the needle plate.
2. The knife pressure should be set as low as possible but the cutting operation should still be carried out reliably.

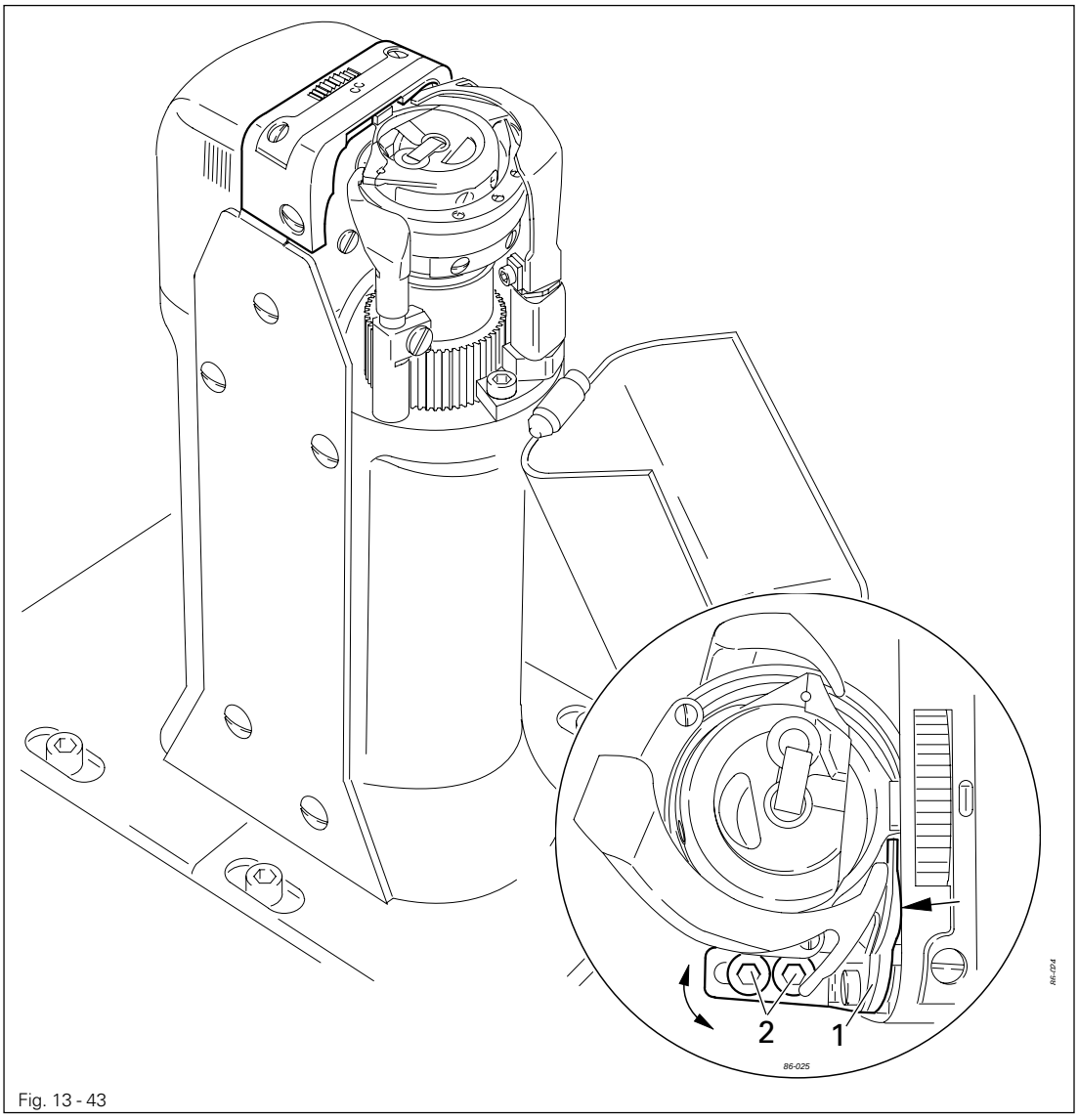

Fig. 13 - 43

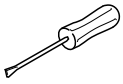

- Move knife **1** (screws **2**) in accordance with **requirement 1** or swivel it in accordance with **requirement 2**.

13.07.06 Bobbin thread retaining spring

Requirement

1. The bobbin thread clamp spring should be guided reliably in the thread groove of the thread catcher **3**.
2. The tension of the bobbin thread spring clamp should be as low as possible, but the bobbin thread should be held reliably after the cutting operation.

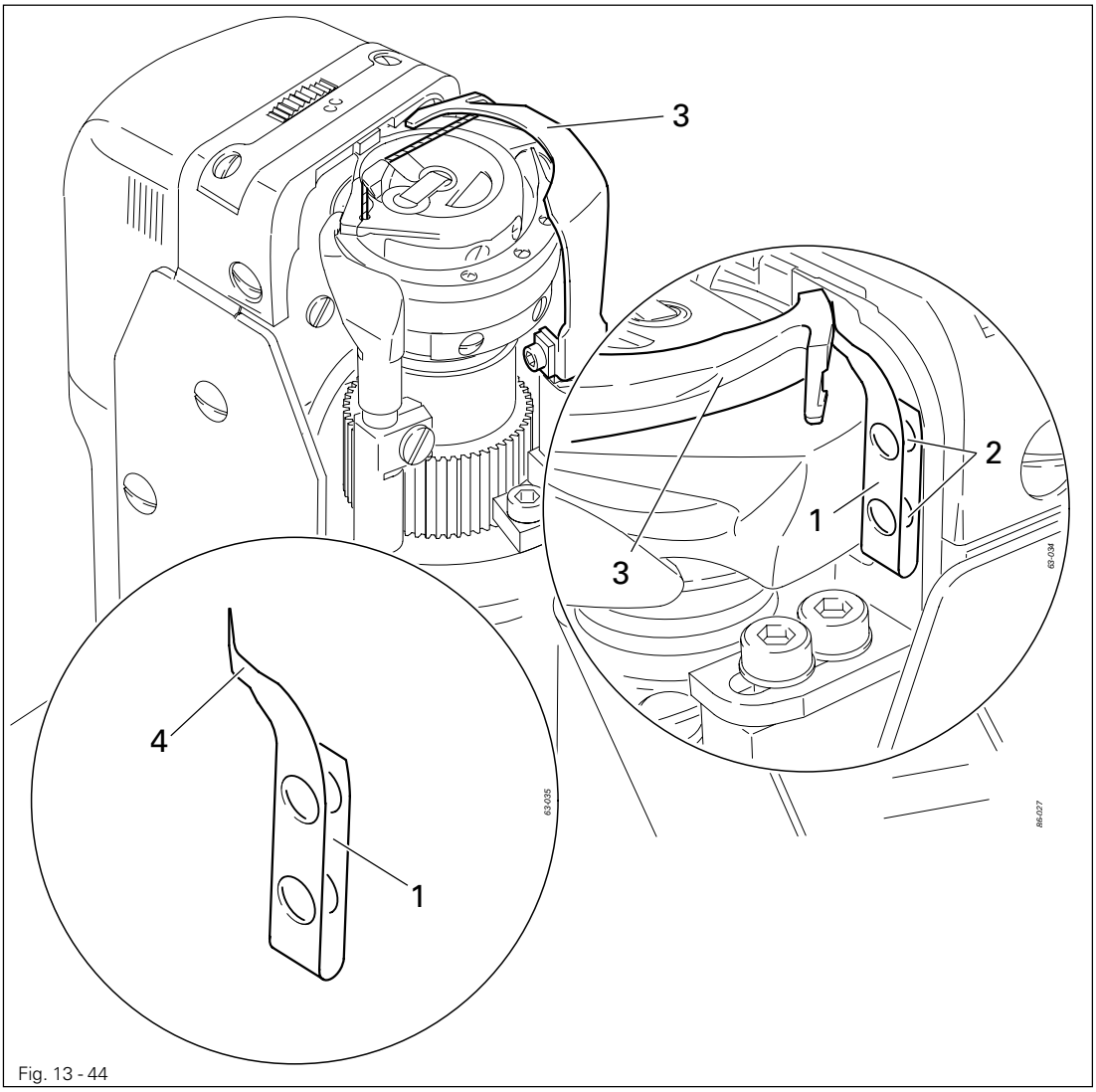

Fig. 13 - 44

- Adjust bobbin thread clamp spring **1** (screws **2**) in accordance with **requirement 1**.
- Adjust the tension in accordance with **requirement 2** by bending side **4** of the bobbin thread clamp spring **1**.

Control - requirement 1

- Switch off the machine and bring the take-up lever to its b.d.c.
- Engage and disengage the thread catcher **3** by hand and check **requirement 1**. Adjust if necessary.

Control - requirement 2

- After the thread has been cut, sew a few stitches by turning the balance wheel, checking whether the bobbin thread is drawn out of the bobbin thread clamp spring between the 1st and 3rd stitches. If necessary, correct the tension.

13.07.07 Manual cutting test

Requirement

1. When thread catcher **1** is on its forward stroke, it must not carry bobbin thread **3** forward too.
2. When thread catcher **1** is in its front position, bobbin thread **3** must be held reliably by hook **4.**
3. After the trimming action, both the needle thread and the bobbin thread must be perfectly cut and bobbin thread **3** retained.

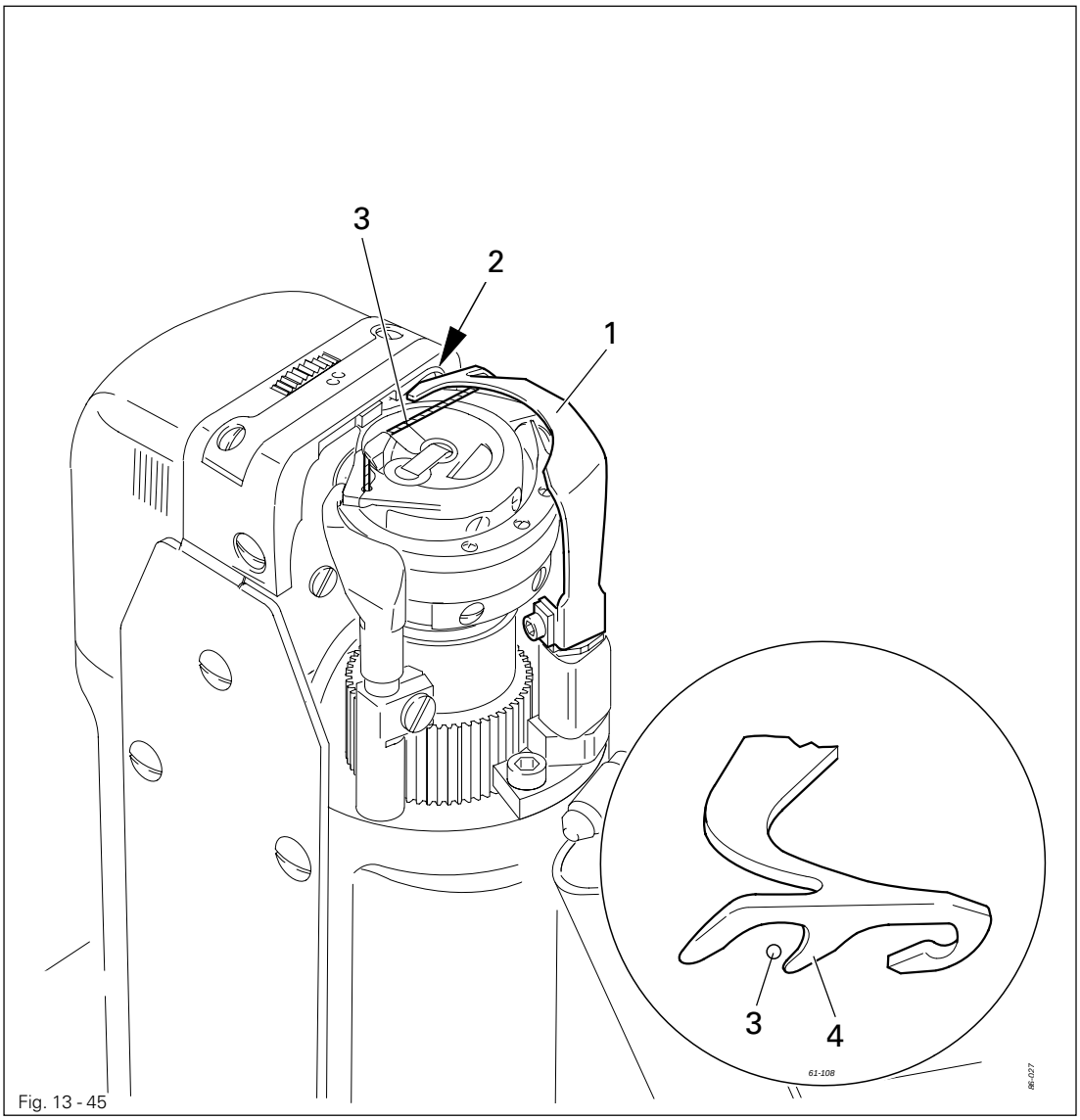

Fig. 13 - 45

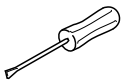

- Sew a few stitches.
- Turn off the on/off switch.
- Carry out the cutting operation manually.
- Check **requirement 1** and **2**, and if necessary readjust thread catcher **1** in accordance with **Chapter 13.07.04 Position of the thread catcher.**
- Check **requirement 3**, and if necessary readjust the bobbin thread retaining spring **2** in accordance with **Chapter 13.07.06 Bobbin thread retaining spring**.

13.07.08 Linkage rod (only for the PFAFF 1574)

Requirement
When the thread trimmer is in its resting position, the drive levers **1** must be parallel.

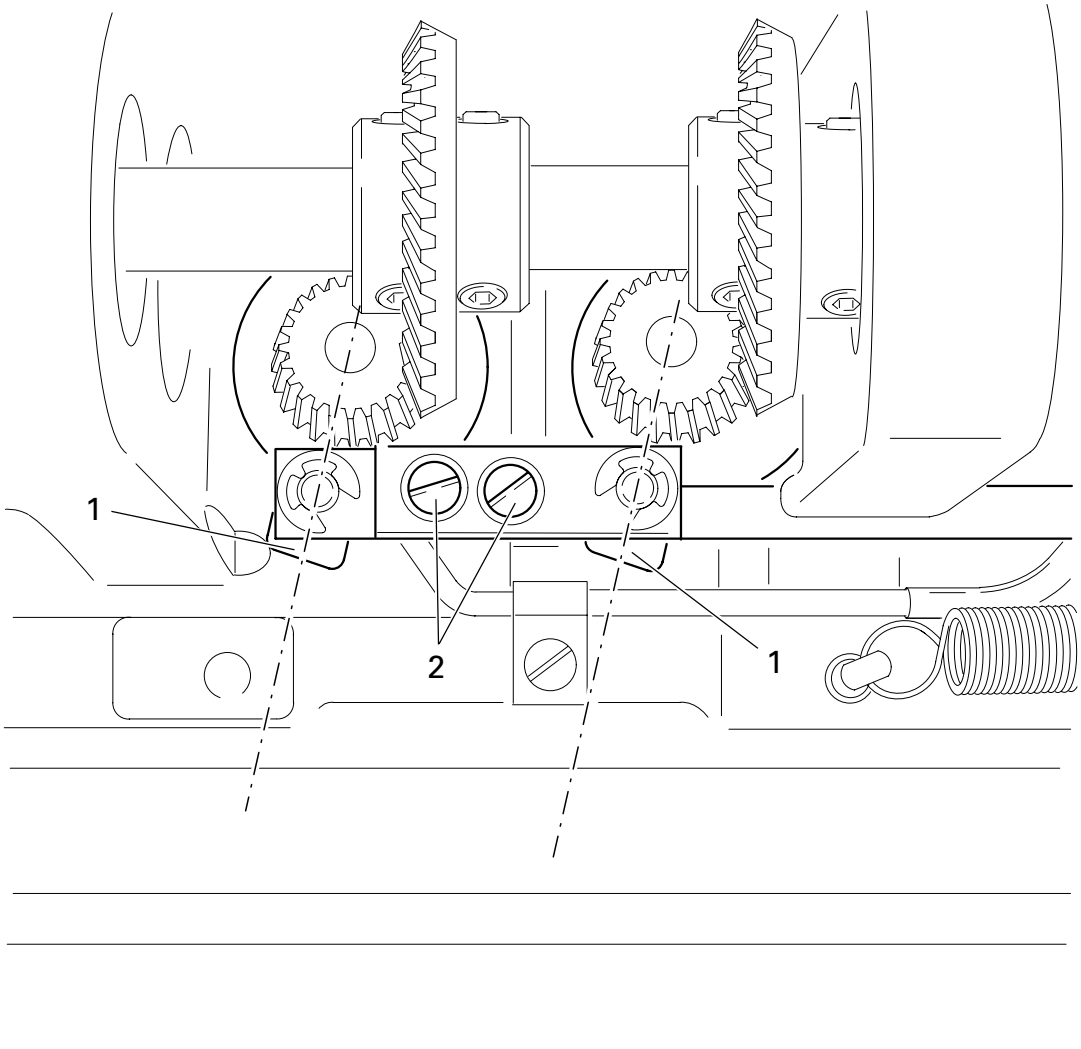

Fig. 13 - 46

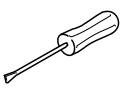

- Adjust drive levers **1** (screws **2**) in accordance with the **requirement.**

13.08 Parameter settings

13.08.01 Parameter input example

- Switch on the machine

2 x TE SPEED

- Select input mode by pressing **TE/Speed** key twice.

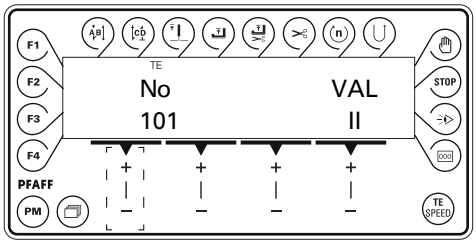

No

- Select parameter group "500" by pressing the corresponding **+/- key.**

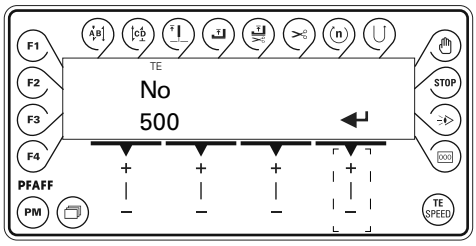

↵

- Confirm selection by pressing the corresponding **+/- key**.
- Enter the code number, see **Chapter 9.10 Entering/changing the code number**.

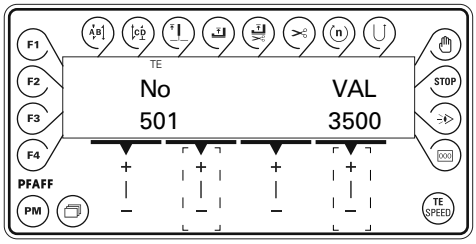

No

- Select the desired parameter, e.g. "501" by pressing the corresponding **+/- key.**

VAL

- Set the desired parameter value by pressing the corresponding **+/- key.**

TE SPEED

- By pressing the **TE/speed** key, the value is taken over and the machine changes to the sewing mode.

13.08.02 List of parameters



The operator has free access to the "100" parameters. Parameters "200" - "800" can only be changed after entering a code number and many only be changed by authorised personnel.

Group	Parameter	Description	Setting range	Set value 1574	Set value 1571/1591
1	101	Start backtack, pedal-controlled (I = OFF, II = ON)	I -II	I	I
	102	Reversing (I = OFF, II = ON)	I -II	I	I
	103	Stitch placement (I = OFF, II = ON)	I - II	I	I
	104	Bobbin thread monitoring (0 = OFF, I = reverse counter, 2 = thread monitor)	0 - 2	0	0
	105	Bobbin thread reverse counter	0 - 99999	12000	12000
	106	Remaining bobbin thread counter	0 - 999	100	100
	108	Display software version of main processor	0329/…		
	109	Display software version of stepping motor processor			0305/....
	110	Display software version of the control panel	V004H202		
	111	Display software version of the sewing drive	V35		
	112	Key tone of the control panel I = off, II = on	I - II	II	II
	113	Beep tone for section change I = off, II = on	I - II	I	I
2	201	Machine configuration 1 = 1571 + 1591, 2 = 1571 + 1591 with sensor 6 = 1574, 7 = 1574 with sensor	1 - 7	1	1
	202	Lowering speed roller presser I = slow, II = quick	I - II	I	I
	203	Allocation single stitch key I = single stitch, II = needle raised	I - II	I	I
	204	Allocation semi-stitch key I = semi-stitch, II = needle raised	I - II	I	I
3	301	Position take-up lever t.d.c.	0 - 191 0 - 127	3 -	- 125

Group	Parameter	Description	Setting range	Set value 1574	Set value 1571/1591
3	302	Position needle lowered	0 - 127	35	17
	303	Position cutting solenoid "on"	0 - 127	35	17
	304	Position cutting solenoid "tacting"	0 - 127	155	100
	305	Position cutting solenoid "off"	0 - 127	185	120
	306	Reverse position	0 - 127	155	100
	307	Placement stitch position	0 - 127	7	7
	308	Position thread tension release	0 - 127	170	98
4	401	Delay time lifting roller presser (s)	0.01 - 1.50	0.02	0.02
	402	Start delay after lowering roller presser (s)	0.01 - 1.50	0.15	0.15
	403	Set lift roller presser (s)	0.01 - 0.20	0.03	0.03
	404	Tact thread cutting solenoid (%)	10 - 50	35	35
	405	Time for cleaning thread monitor (s)	0.01 - 1.50	0.25	0.25
5	501	Maximum speed	100 - 3500	2600	3500
	502	Speed start backtack	100 - 1500	700	700
	503	Speed end backtack	100 - 1500	700	700
	504	Speed soft start	100 - 3500	1500	700
	505	Soft start stitches	0 - 15	0	0
6	601	Move stepping motor roller presser and feed wheel			
	602	Display inputs 0123456789ABCDEF 0: Centre position needle(1571, 1591) E16 1: End position needle(1571, 1591) E15) 2: Coding intermittent (E14) 3: not assigned (E13) 4: not assigned (E12) 5: not assigned (E11) 6: not assigned (E10) 7: not assigned (E9) 8: not assigned (E8) 9: Bobbin thread error (E7) A:Knee switch (E6) B:Sensor (E5) C:Start inhibitor (E4) D:Single stitch key on machine head (E3) E:Semi-stitch key on machine head (E2) F:Reverse stitch key on machine head (E1)			

Group	Parameter	Description	Setting range	Set value 1574	Set value 1571/1591
	603	Basic position of the machine drive unit (see Chap. 8.02.04 and 8.02.05)		-	(8±3)
	604	Carry out cold start (see Chap. 13.11)			
	605	Stitch formation check by turning the balance wheel			
7	701	P-quota speed controller	1 - 50	20	30
	702	I-quota speed controller	0 - 100	50	50
	703	P-quota position controller	1 - 50	20	20
	704	D-quota position controller	1 - 100	30	30
	705	Time for position controller	0 - 100	25	25
	706	P-quota position controller for rest brake	1 - 50	25	25
	707	D-quota position controller for rest brake	1 - 50	15	15
	708	Maximum moment for rest brake	0 - 100	0	0
	709	Minimum machine speed	3 - 64	6	6
	710	Maximum machine speed	1 - 35	26	35
	711	Maximum motor speed	1 - 35	40	35
	712	Positioning speed	3 - 25	18	18
	713	Acceleration ramp	1 - 50	35	35
	714	Brake ramp	1 - 50	30	30
	715	Reference position	0 - 127	35	17
	716	Time-out	0 - 255	40	40
	717	Starting current motor	3 - 10	8	8
	718	Anti-vibration filter	1 - 10	6	6
	719	Rotation direction allocation	0 - 1	0	0
	720	Reference position correction	1 - 127	64	64
8	801	Right of access function group 100	0 - 1	0	0
	802	Right of access function group 200	0 - 1	1	1
	803	Right of access function group 300	0 - 1	1	1
	804	Right of access function group 400	0 - 1	1	1

Group	Parameter	Description	Setting range	Set value 1574	Set value 1571/1591
8	805	Right of access function group 500	0 – 1	1	1
	806	Right of access function group 600	0 – 1	1	1
	807	Right of access function group 700	0 – 1	1	1
	808	Right of access function group 800	0 – 1	1	1
	809	Right of access program creation	0 – 1	1	1
	810	Enter access code	0 – 9999	1500	1500

13.09 Explanation of the error messages

Message	Description
Error 1:	System error
Error 2:	Sewing motor
Error 3:	Section
Error 4:	End of section
Error 5:	Pedal activated when machine switched on
Error 6:	Communication error with stepping motor processor
Error 7:	End of ramp
Error 8:	End position of needle drive not found
Error 9:	Centre position of needle drive not found
Error 10:	Error of stepping motor processor
Error 11:	Stepping motor stepping frequency too high
Error 12:	Error in sewing start deflection
Error 13:	Error in docu-seam system
Error 14:	Incorrect program number (larger than 99)
Error 15:	Incorrect section number
Error 16:	Memory full
Error 17:	Incorrect stitch length
Error 19:	Interface to external controller
Error 21:	Power supply unit overloaded
Error 22:	Mains voltage
Error 23:	Power supply 24V too high/too low

13.10 Warning messages

Message	Description
Warning 2	Bobbin thread error

13.11 Carrying out a cold start

- Switch on the machine.

2 x TE SPEED

- Press the **TE/Speed** key twice to select the input mode.

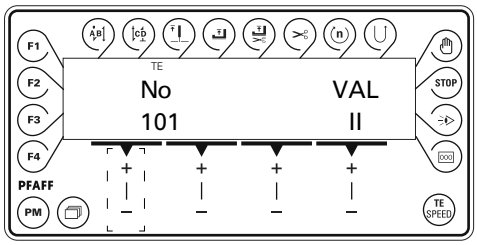

No

- Select parameter group "600" by pressing the corresponding **+/- key**.

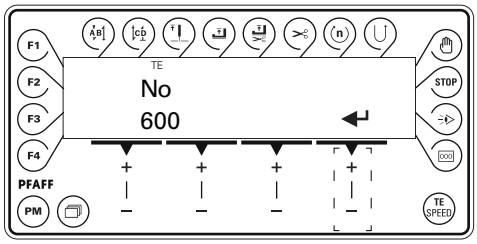

↵

- Confirm selection by pressing the corresponding **+/- key**.
- Enter the code number, see **Chapter 9.10 Entering/changing the code number**.

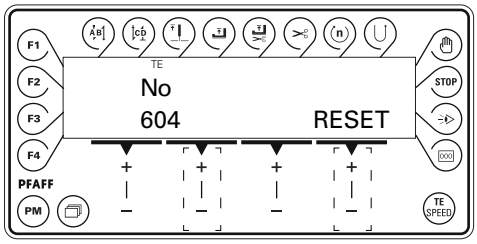

No

- Select parameter "604" by pressing the corresponding **+/- key.**

RESET

- Carry out cold start by pressing the corresponding **+/- key.**
- Switch off the machine.



After a cold start all programmed values are reset to their status at the time of delivery.

13.12 Internet update of the machine software

The machine software can be updated with PFAFF flash programming. For this purpose the PFP boot program and the appropriate control software for the machine type must be installed on a PC. To transfer the data to the machine, the PC and the machine control unit must be connected with an appropriate null modem cable (part no. 91-291 998-91).

The PFP boot program and the control software of the machine type can be downloaded from the PFAFF-homepage using the following path:
www.pfaff-industrial.de/de/service/download/steuerungssoftware.html

To update the machine software carry out the following steps:

While the machine software is being updated, no setting up, maintenance or adjustment work may be carried out on the machine!

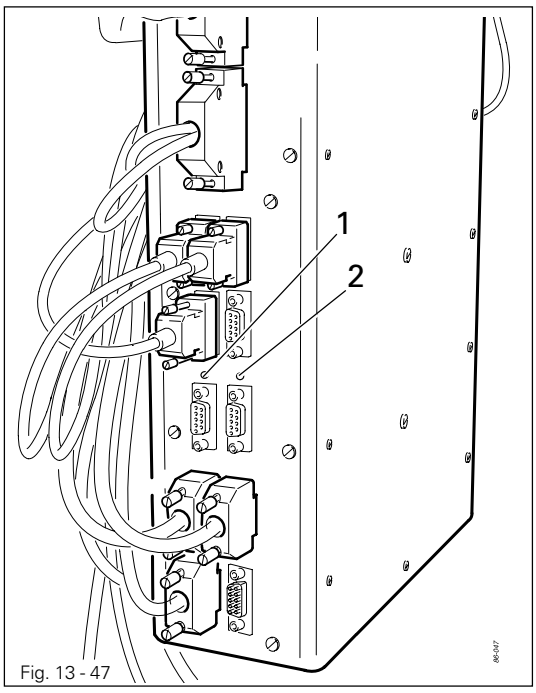

Fig. 13 - 47

- Switch off the machine.
- Connect the PC (serial interface or appropriate USB-adapter) and the machine control unit (RS232). To do so disconnect the plug of the control panel.
- Switch on the PC and start the PFP boot program.
- Select the machine type.
- Press the "programming" button.
- Depending on which software is to be up-dated, hold down boot key **1** or **2** and switch on the machine.
  1 = for machine controller
  2 = for stepping motors
  (The PFAFF 1574 has only one boot key for both functions).
- Press the "OK" button.
  The software update is carried out, the update progress is shown on the bar display of the PFP boot program.
- During the up-dating procedure the machine must not be switched off.
- When the update has been completed, switch off the machine and end the PFP boot program.
- End the connection between the PC and the machine control unit and reconnect the control panel to the machine control unit.
- Switch on the machine.
  A plausibility control is carried out and, if necessary, a cold start.

More information and assistance is at your disposal in the file "PFPHILFE.TXT", which can be called up from the PFP boot program by pressing the "help" button.

14 14Wearing parts

This list indicates the most important wearing parts.
You can request a detailed parts list for the complete machine under parts number 296-12-18 725.

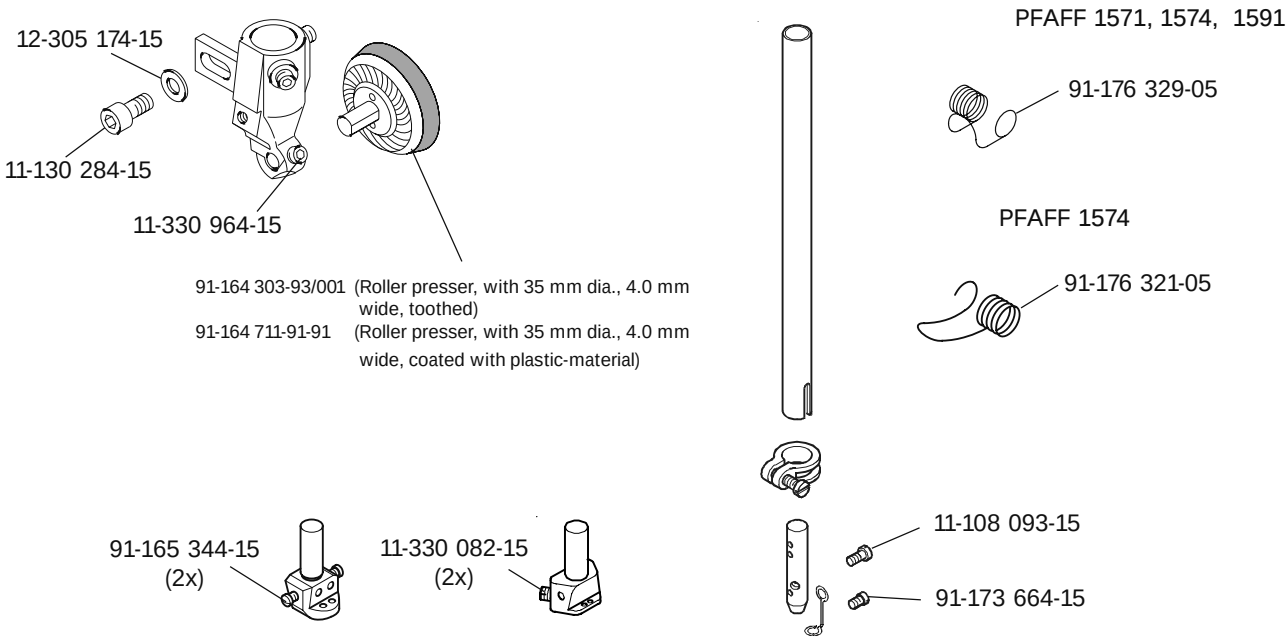

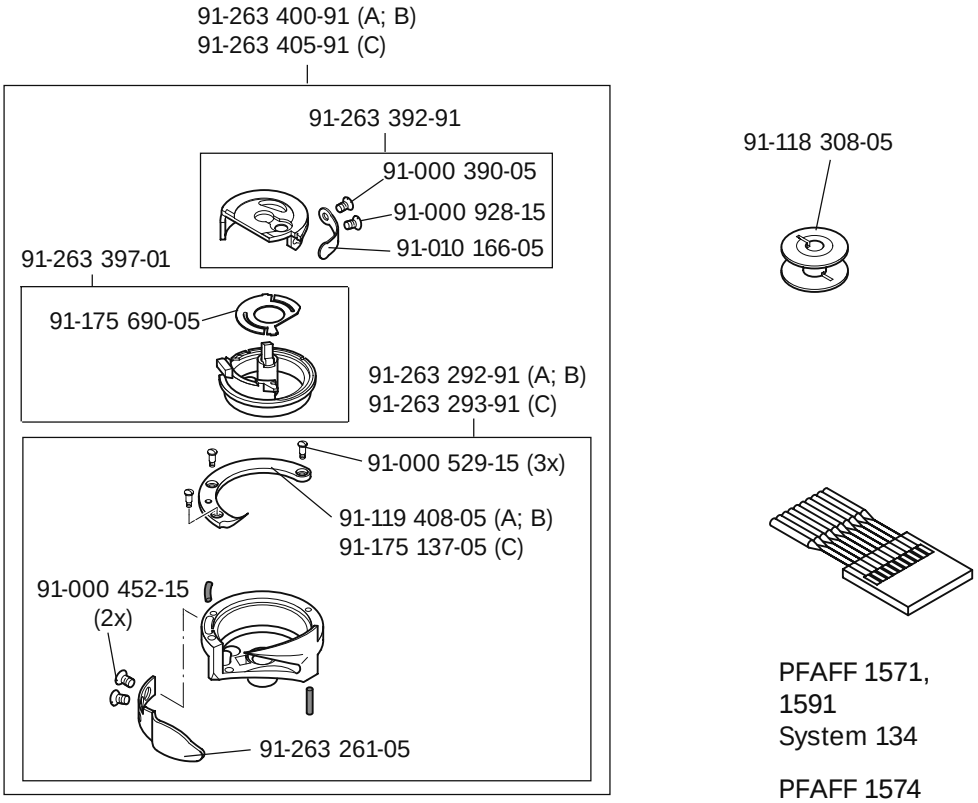

PFAFF 1571, 1591
System 134

PFAFF 1574
System 134-35

For sub-class -900/81

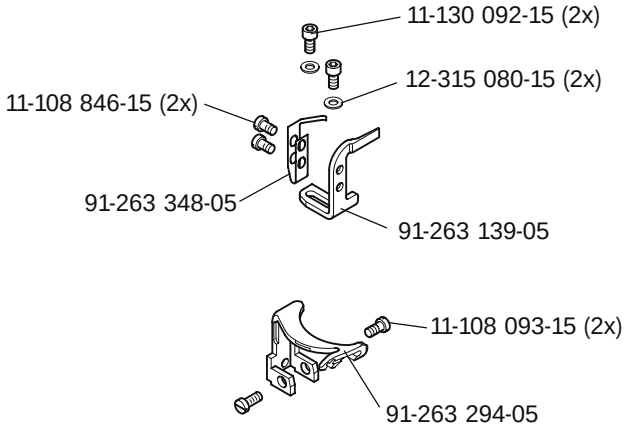

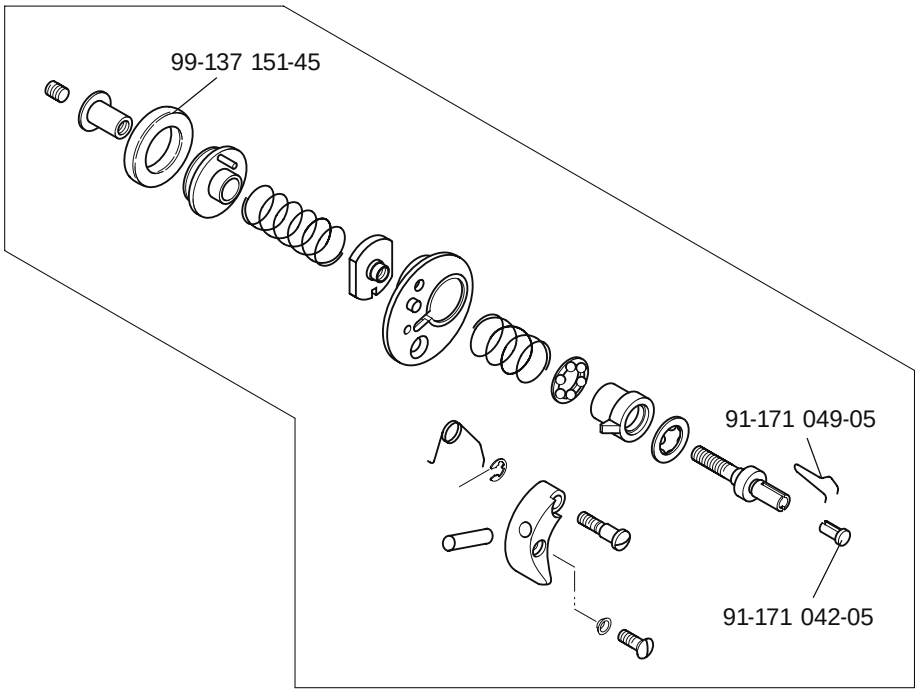

1571-725/04

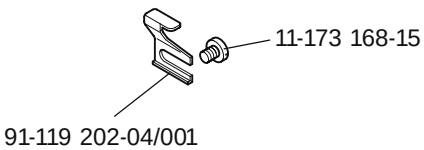

1574-725/04; 1591-725/04

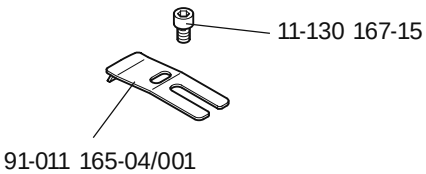

1591-726/05

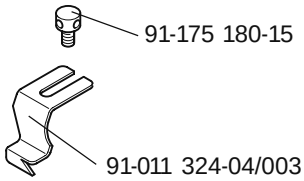

15 Circuit diagrams

Reference list for circuit diagrams

A1	Controller Quick P 320MS (P 321 MS)
A2	Control panel S2
A3	Sewing head identification
DX355	Needle pendulum (only with P321 MS)
H1	Sewing lamp
H20	LED Stitch counter
M1	Sewing motor
M2	Stepping motor feed wheel
M3	Stepping motor roller presser
M4	Stepping motor needle (only with P321 MS)
PDE	Synchronizer PD 3
Q1	Main switch
S1	Pedal set value transmitter
S20	Knee switch (program)
S21	Manual backtacking key
S22	Single stitch switch
S23	Needle position change switch
S24	Start inhibitor switch
X1	Mains plug
X1A	RS232 – interface 1 Control panel S2
X1B	VSS sewing head identification
X3	Incremental transmitter (sewing motor)
XR3	Incremental transmitter (sewing motor) PFAFF 1574
X4A	Stepping motor feed wheel
X4B	Stepping motor roller presser
X5	Inputs
X6A	Stepping motor needle (only with P321 MS)
X6B	RS232 – interface 2 (only with P321 MS)
X8	Sewing motor
X11A	CAN interface
X11B	Pedal set value transmitter
X13	Outputs
Y1	-910/..Automatic presser foot lift
Y2	-900/..Thread trimmer
Y3	Thread tension
Y4	Thread tension
Y6	-926/04 Bobbin thread monitor

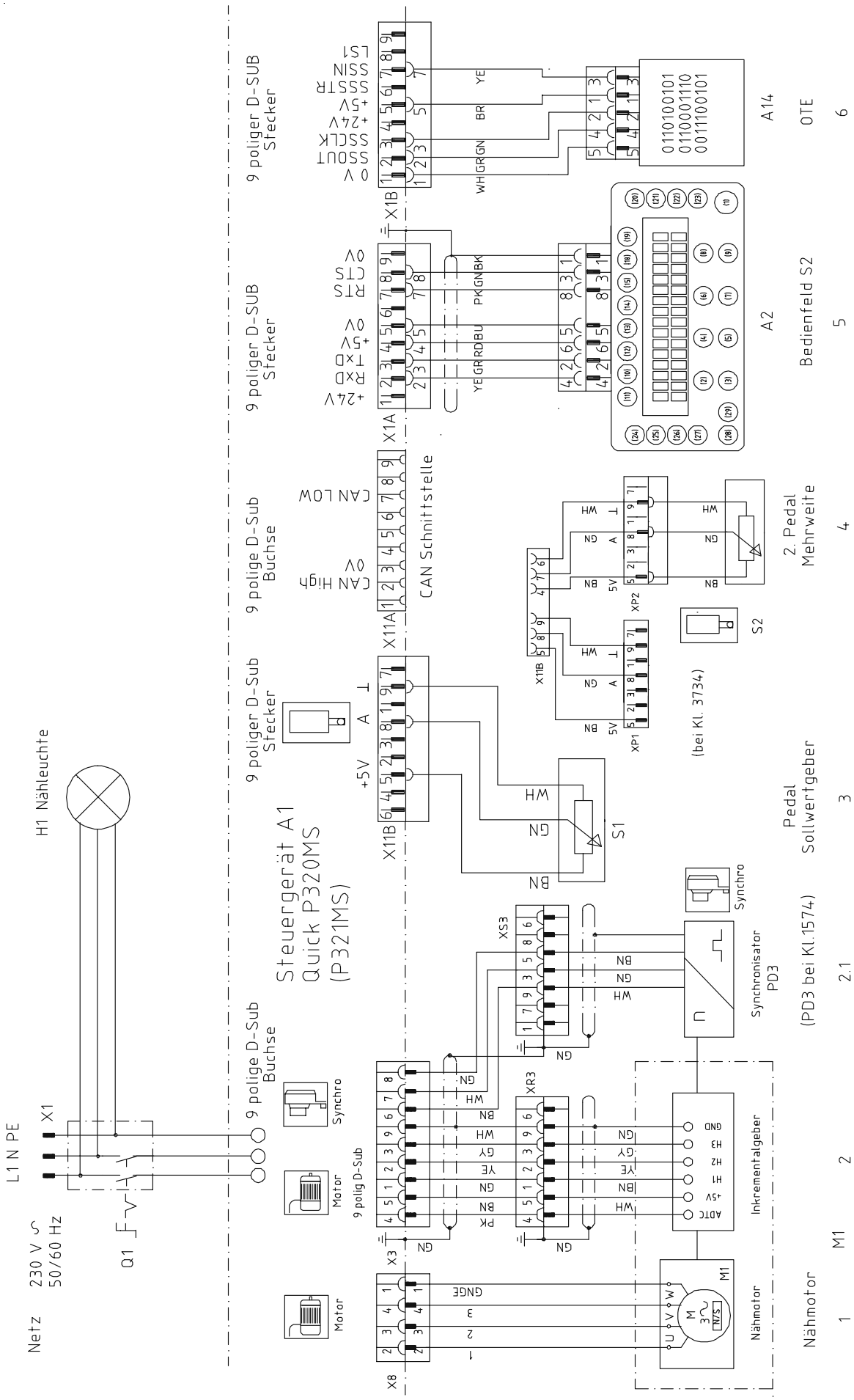
Netz 230 V 50/60 Hz
L1 N PE
X1
Q1
H1 Nähleuchte
Steuergerät A1
Quick P320MS
(P321MS)
9 poliger D-Sub Stecker
9 polige D-Sub Buchse
X11A
X11B
X1A
X1B
X3
X8
CAN Schnittstelle
CAN High
CAN LOW
0V
+5V
A
⊥
S1
S2
2. Pedal
Mehrweite
Pedal
Sollwertgeber
(bei Kl. 3734)
(PD3 bei Kl.1574)
Synchronisator
PD3
Synchro
Motor
9 polig D-Sub
Inkrementalgeber
Nähmotor
M1
A2
Bedienfeld S2
A14
OTE
XS3
XR3
XP1
XP2
1
2
2.1
3
4
5
6

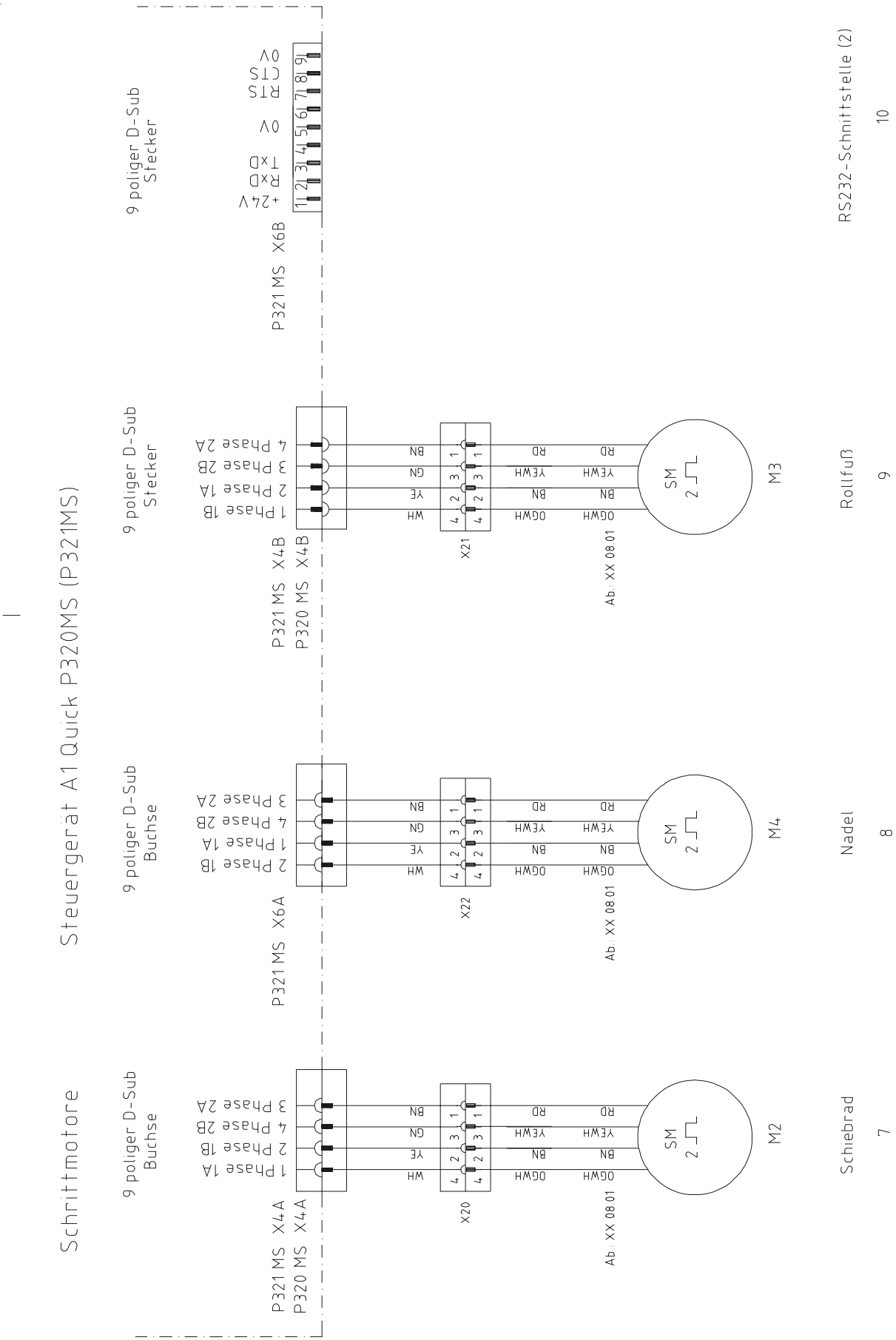
Steuergerät A1 Quick P320MS (P321MS)
Schrittmotore
P321 MS X4A
P320 MS X4A
9 poliger D-Sub Buchse
1 Phase 1A
2 Phase 1B
3 Phase 2A
4 Phase 2B
X20
Ab: XX 08 01
SM
M2
Schiebrad
7
P321 MS X6A
9 poliger D-Sub Buchse
1 Phase 1B
2 Phase 1A
3 Phase 2A
4 Phase 2B
X22
Ab: XX 08 01
SM
M4
Nadel
8
P321 MS X4B
P320 MS X4B
9 poliger D-Sub Stecker
1 Phase 1B
2 Phase 1A
3 Phase 2B
4 Phase 2A
X21
Ab: XX 08 01
SM
M3
Rollfuß
9
P321 MS X6B
9 poliger D-Sub Stecker
+24V
RxD
TxD
0V
RTS
CTS
0V
RS232-Schnittstelle (2)
10

General plan - circuit diagrams

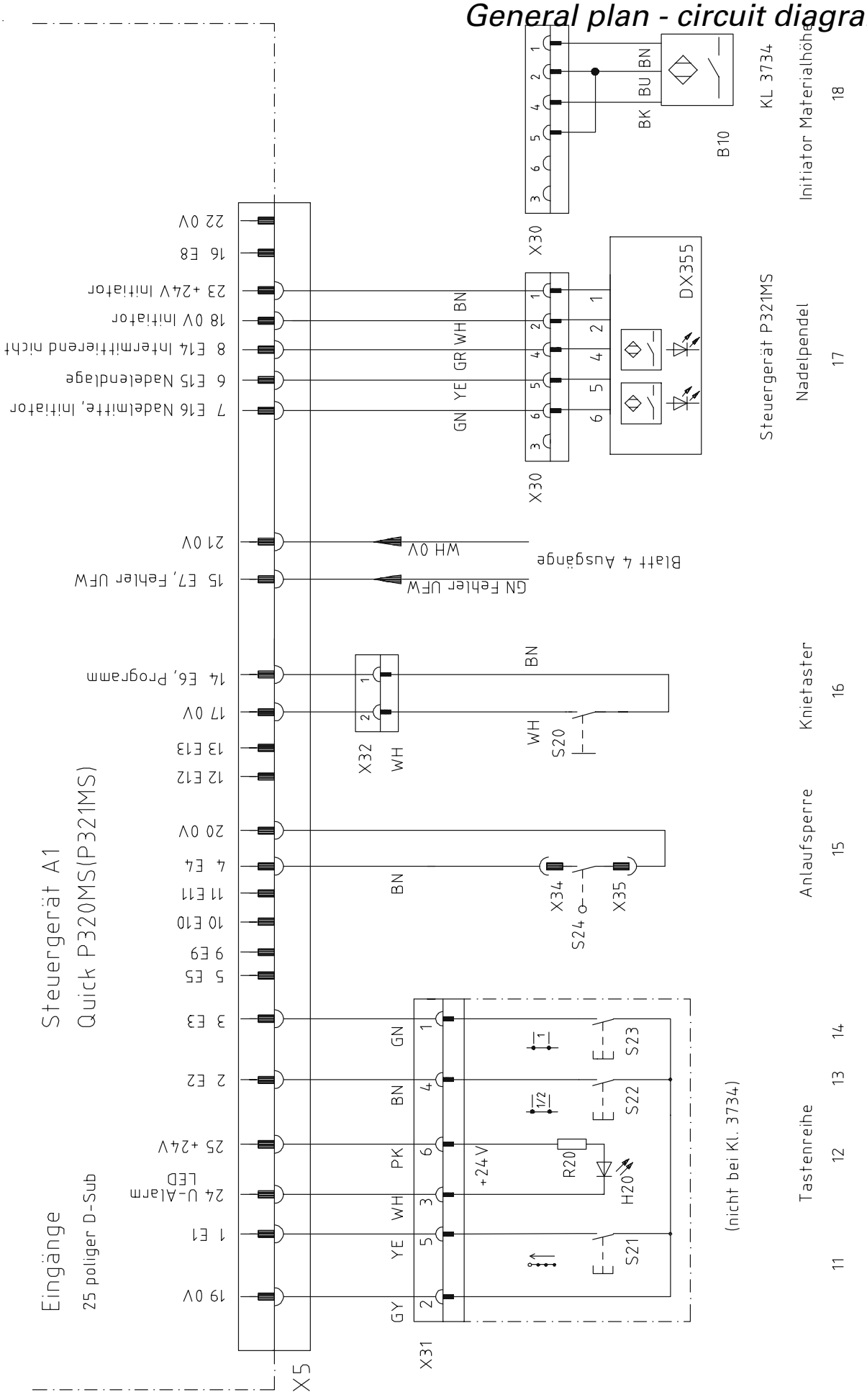

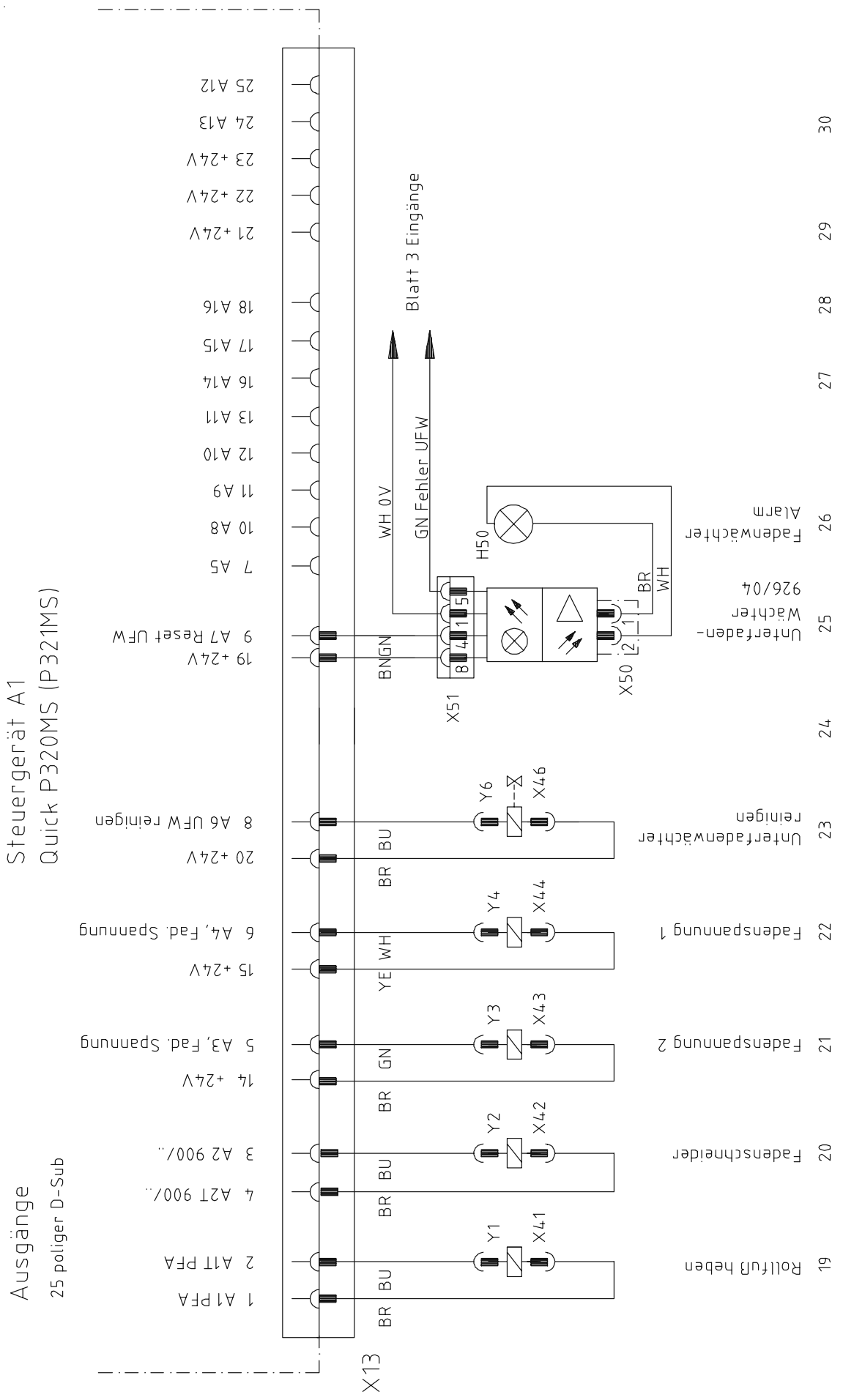
Steuergerät A1
Quick P320MS (P321MS)
Ausgänge
25 poliger D-Sub
X13
1 A1 PFA
2 A11 PFA
4 A21 900/..
3 A2 900/..
14 +24V
5 A3, Fad. Spannung
15 +24V
6 A4, Fad. Spannung
20 +24V
8 A6 UFW reinigen
19 +24V
9 A7 Reset UFW
7 A5
10 A8
11 A9
12 A10
13 A11
16 A14
17 A15
18 A16
21 +24V
22 +24V
23 +24V
24 A13
25 A12
BR
BU
BR
BU
BR
GN
YE
WH
BR
BU
BNGN
WH 0V
GN Fehler UFW
Blatt 3 Eingänge
Y1
X41
Y2
X42
Y3
X43
Y4
X44
Y6
X46
X51
X50
H50
BR
WH
Rollfuß heben
Fadenschneider
Fadenspannung 2
Fadenspannung 1
Unterfadenwächter reinigen
Unterfaden-Wächter 926/04
Fadenwächter Alarm
19
20
21
22
23
24
25
26
27
28
29
30

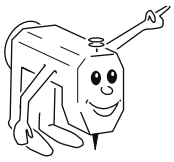

Note

PFAFF® Industrial



Europäische Union
Wachstum durch Innovation – EFRE



PFAFF Industriesysteme
und Maschinen AG

Hans-Geiger-Str. 12 - IG Nord
D-67661 Kaiserslautern

Phone: +49-631 200-0
Fax: +49-631 17202
E-mail: info@pfaff-industrial.com

Hotlines:
Technical service: +49-175/2243-101
Application consultance: +49-175/2243-102
Spare-parts hotline: +49-175/2243-103

Printed in Germany