PFAFF® Industrial

POWERLine

2235

ADJUSTMENT MANUAL

This Adjustment Manual is valid for machines from the following serial numbers onwards:

2 799 145 ⟶

296-12-19 218/002
Justieranleitung engl. 09.12

The reprinting, copying or translation of PFAFF Adjustment Manuals, whether in whole or in part, is only permitted with our previous authorization and with written reference to the source.

PFAFF Industriesysteme
und Maschinen AG

Hans-Geiger-Str. 12 - IG Nord
D-67661 Kaiserslautern

Contents ..... Page

1	**Adjustment**	**4**
1.01	Notes on adjustment	4
1.02	**Tools, gauges and other accessories for adjusting**	**4**
1.03	Abbreviations	4
1.04	Explanation of the symbols	4
1.05	Adjusting the basic machine	5
1.05.01	Basic position of the balance wheel (adjustment aid)	5
1.05.02	Balance weight	6
1.05.03	Zero position of the unison feed	7
1.05.04	Feeding motion of the unison feed	8
1.05.05	Lifting motion of the bottom feed dog	9
1.05.06	Height of the bottom feed dog	11
1.05.07	Feeding stroke difference	12
1.05.08	Preliminary adjustment of the needle height	13
1.05.09	Needle rise, hook clearance and needle height	14
1.05.10	Top feed stroke	15
1.05.11	Top-feed lifting motion	16
1.05.12	Adjusting the potentiometer for speed reduction	17
1.05.12.01	On machines with drive **P45 PD2-L and P74 ED-L**	17
1.05.12.02	On machines with drive **PF 321**	17
1.05.13	Machine drive home position	18
1.05.13.01	On machines with drive **P45 PD2-L**	18
1.05.13.02	On machines with drive **P74 ED-L**	18
1.05.13.03	On machines with drive **AB 321**	19
1.05.13.04	On machines with drive **PF 321**	19
1.05.14	Bobbin winder	20
1.05.15	Thread check spring and thread regulator	21
1.05.16	Sewing foot pressure	22
1.05.17	Lubrication	23
1.05.18	Limiting the stitch length	24
1.06	Adjusting the thread trimmer -900/91	25
1.06.01	Basic position of the thread trimmer	25
1.06.02	Control cam to roller lever clearance (resting position)	26
1.06.03	Adjusting the control cam	27
1.06.04	Knife pressure	28
1.06.05	Manual cutting test	29
2	**Circuit diagrams**	**30**
2.01	Block diagram PFAFF 2235 PLUS with control pack P45 PD-L	30
2.02	Block diagram PFAFF 2235 PLUS with AB 321	31
2.03	Circuit diagrams	32

1 Adjustment



Please observe all notes from Chapter **1 Safety** of the instruction manual!
In particular care must be taken to see that all protective devices are refitted properly after adjustment, see Chapter **1.06 Danger warnings** of the instruction manual!



If not otherwise stated, the machine must be disconnected from the electrical power supply. Danger of injury due to unintentional starting of the machine!

1.01 Notes on adjustment

All following adjustments are based on a fully assembled machine and may only be carried out by expert staff trained for this purpose.
Machine covers, which have to be removed and replaced to carry out checks and adjustments, are not mentioned in the text.
The order of the following chapters corresponds to the most logical work sequence for machines which have to be completely adjusted. If only specific individual work steps are carried out, both the preceding and following chapters must be observed.
Screws, nuts indicated in brackets ( ) are fastenings for machine parts, which must be loosened before adjustment and tightened again afterwards.

1.02 Tools, gauges and other accessories for adjusting

- Screwdrivers with blade width from **2** to **10 mm**
- Spanners (wrenches) with jaw width from **7** to **14 mm**
- **1** set Allen keys from **1.5** to **6 mm**
- **1** gauge for the top feed stroke **5.0 mm** (Part No. **61-111 633-60**)
- **1** feed dog adjustment gauge, Part No. **61-111 689-04**
- Metal rule (part No. **08-880 218-00**)
- Sewing thread and test materials

1.03 Abbreviations

t.d.c. = top dead centre
b.d.c. = bottom dead centre

1.04 Explanation of the symbols

In this adjustment manual, symbols emphasize operations to be carried out or important information. The symbols used have the following meaning:



Note, information

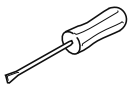

Service, repair, adjustment, maintenance
(work to be carried out by qualified staff only)

1.05 Adjusting the basic machine

1.05.01 Basic position of the balance wheel (adjustment aid)

Requirement
When the needle bar is positioned at t.d.c., the marking "**0**" on the scale should be level with the top edge of the belt guard (see arrow).

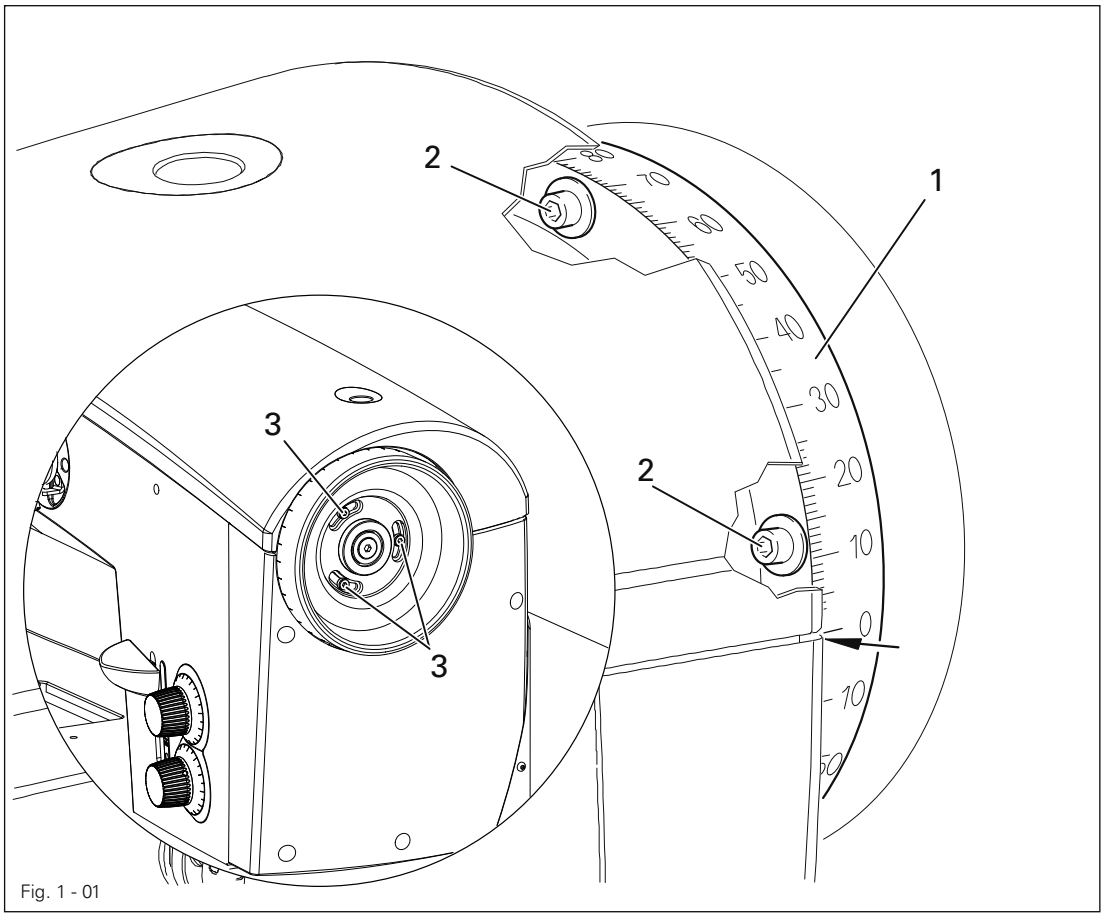

Fig. 1 - 01

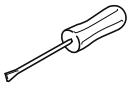

- Adjust the scale dial **1** (depending on model screws **2** or **3**) in accordance with the requirement.

1.05.02 Balance weight

Requirement
When the needle bar is positioned at b.d.c. (balance wheel position **180**°) the largest eccentricity of the balance weight **1** should be at the top.

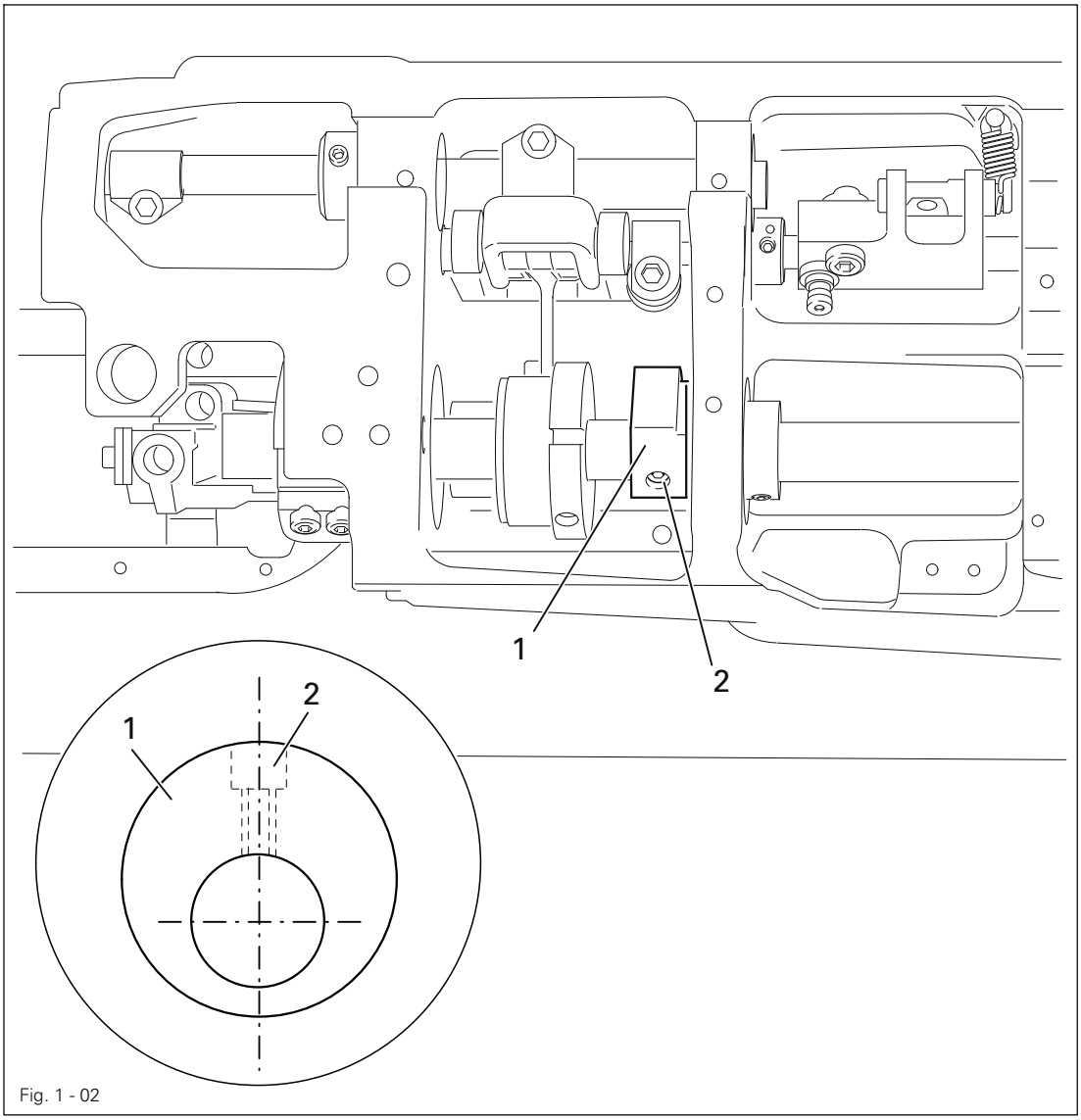

Fig. 1 - 02

- Adjust balance weight **1** (screw **2**) in accordance with the **requirement**.

1.05.03 Zero position of the unison feed

Requirement
When the stitch length is set at "**0**", the top and bottom feed dogs and the needle bar should not make any feeding motion when the balance wheel is turned.

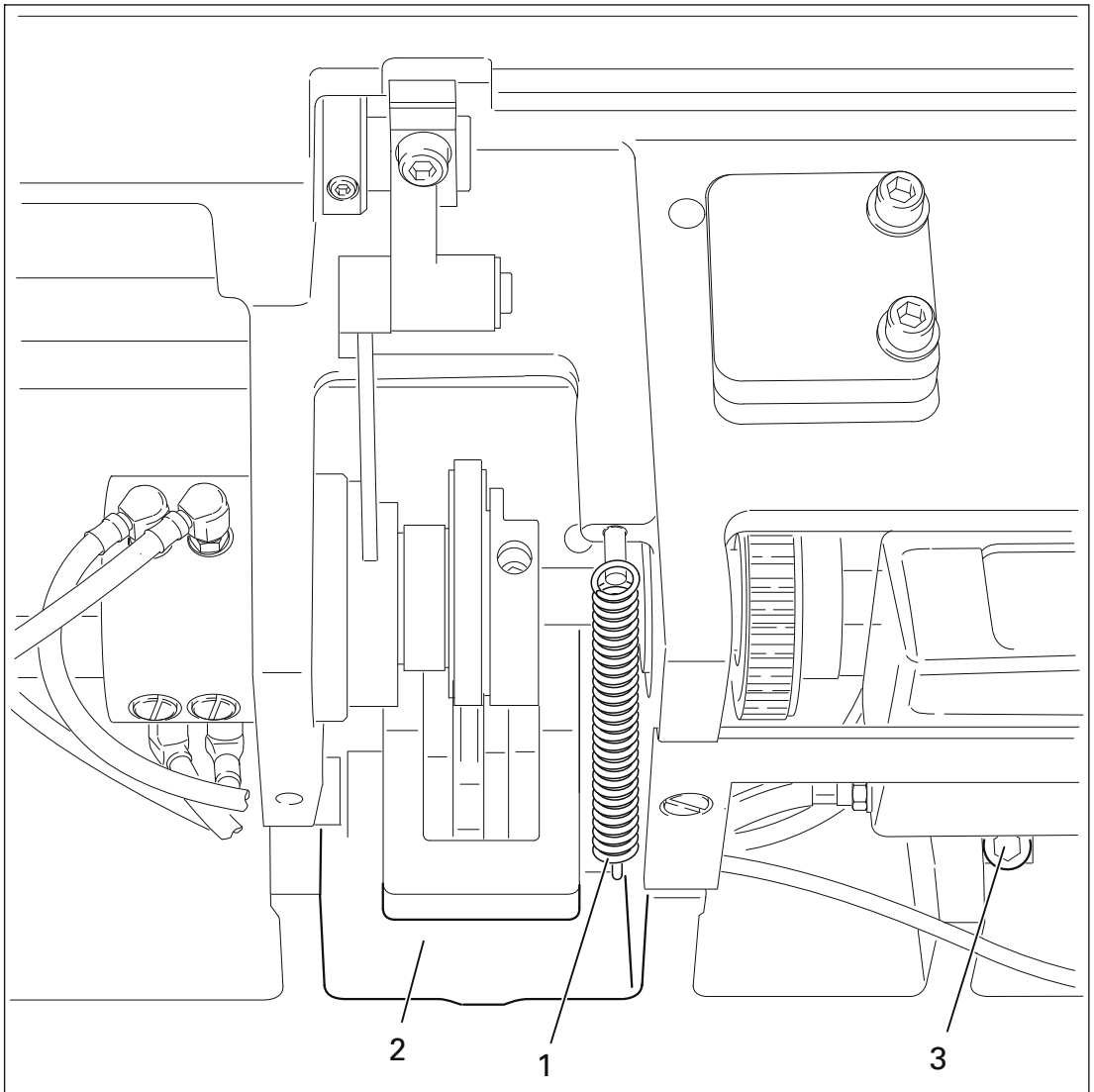

Fig. 1 - 03

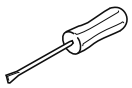

- Remove spring **1**.
- Adjust crank **2** (screw **3**) in accordance with the **requirement**.
- Replace the spring **1**.

1.05.04 Feeding motion of the unison feed

Requirement
When the needle bar is positioned at b.d.c. (balance wheel position **180**°), and the maximum stitch length is set, the top and bottom feed dogs and the needle bar should not make any feeding motion when the reverse-feed lever is pressed.

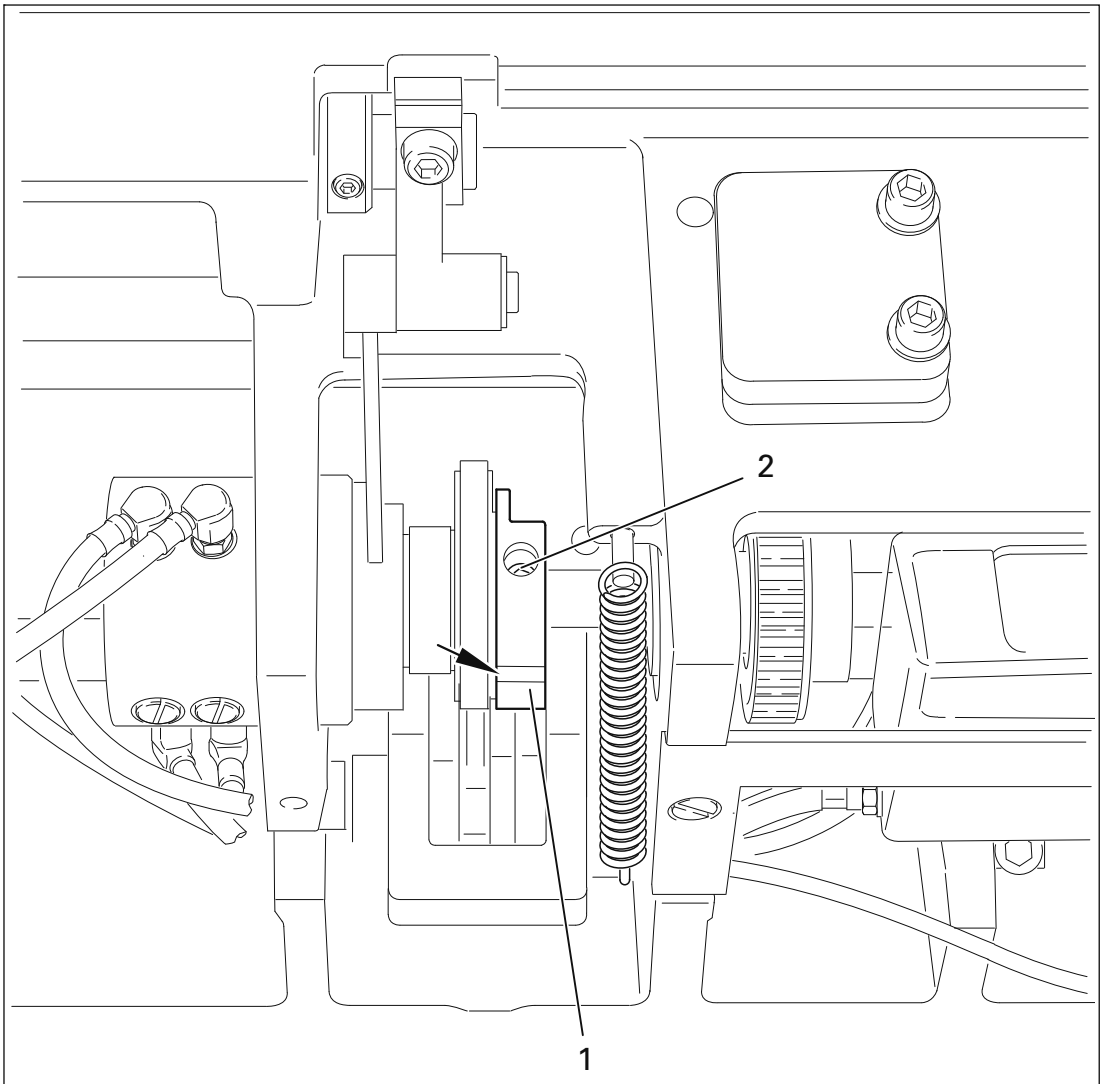

Fig. 1 - 04

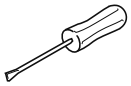

- Adjust eccentric **1** (screws **2**) in accordance with the **requirement**. Make sure that the cut-out (see arrow) is visible.

1.05.05 Lifting motion of the bottom feed dog

Requirement
When the balance wheel is positioned at **180°**, the feed dog should be at t.d.c.

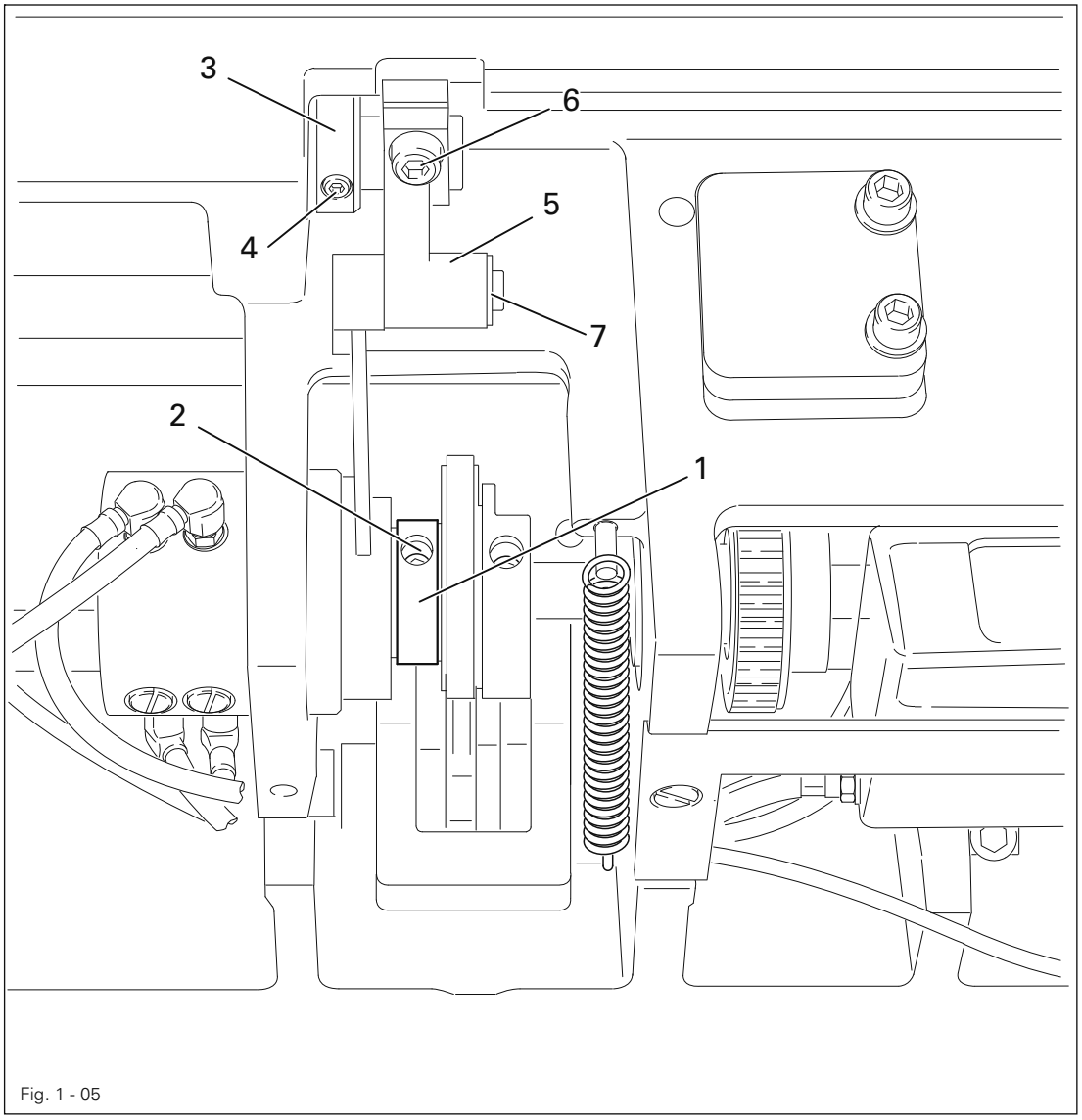

Fig. 1 - 05

- Adjust eccentric **1** (screws **2**) in accordance with the **requirement**.

Use the kit with the Order No. **91-501 398-90** to deactivate the transporter lifting movement.

- Install assembly and adjust
- Remove collar **3** (screws **4**) and crank **5** (screw **6**, snap-ring **7**).
- Mount the preassembled parts of the kit as shown in figures 1 - 05a.
- Adjust bottom transporter height and stroke movement where required.

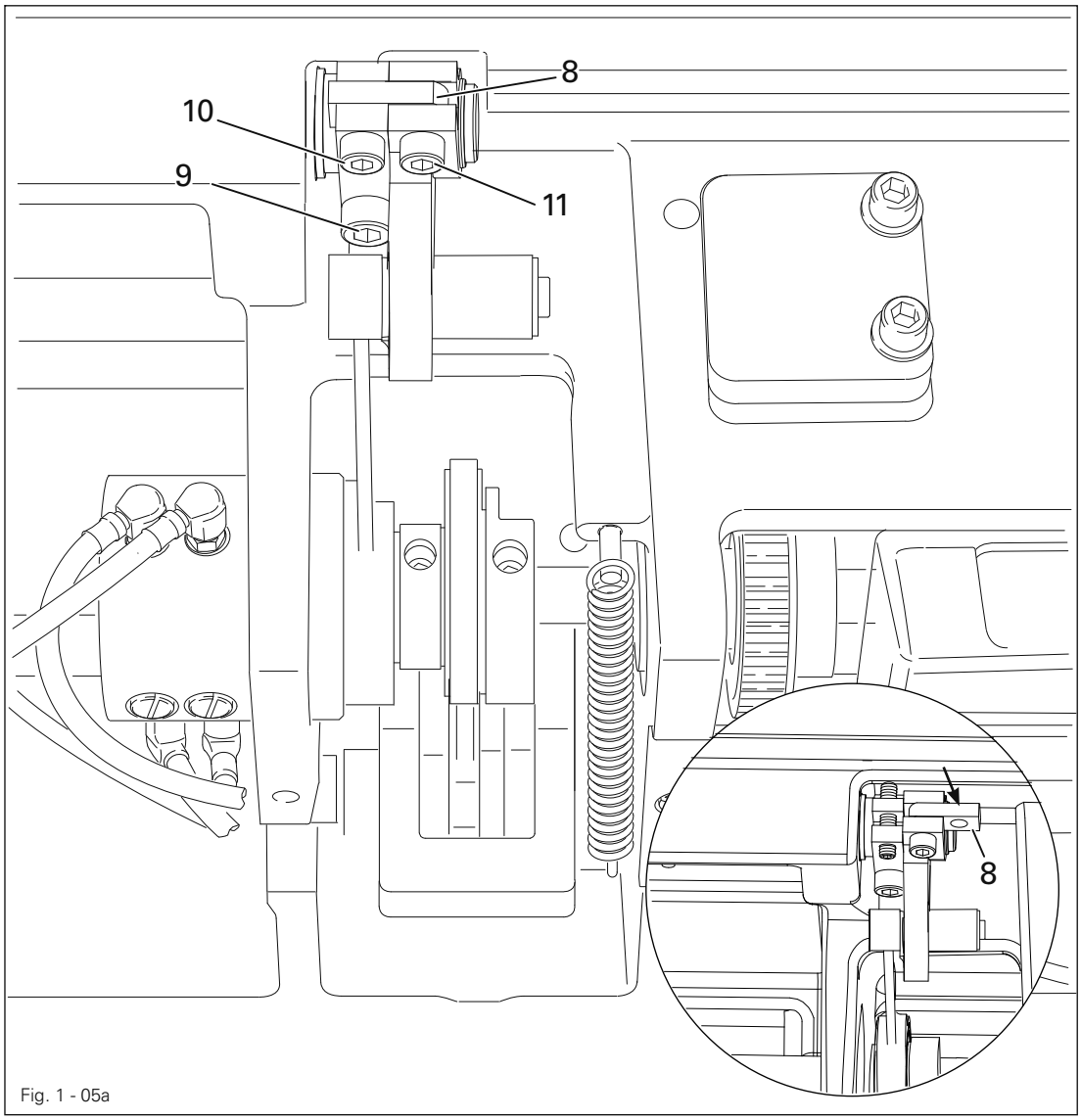

Fig. 1 - 05a

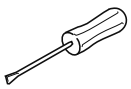

Activate lifting movement

- Lifting movement is activated if connection part **8** is swiveled in as shon in figures **1** - **05**a, and screws **9** (M**6** x **16**) and **10** (M**5** x **1**6) have been attached.

Deactivate lifting movement

- Remove screws **9** and **10** and swivel connection part **8** (screw **11**) towards the right.
- Replace screw **9** with a screw M**6** x **25**.
- Replace screw **10** with a threaded pin M**5** x **25** and tighten to stop.



Adjust transporter height with deactivated stroke movement so that the upper edge of the transporte is at the height of the upper edge of the needle plate. Adjust the transporter height once again with the stroke movement activated, as described in chapter **1**.**05**.0**6**.

1.05.06 Height of the bottom feed dog

Requirement

1. When the stitch length is set at "**0**" and the needle bar is positioned at b.d.c. (balance wheel position **180**°), the bottom feed dog should be positioned **0.5 mm** horizontally above the top edge of the needle plate.
2. In the direction of sewing, the bottom feed dog should be positioned in the centre of the needle plate slot.

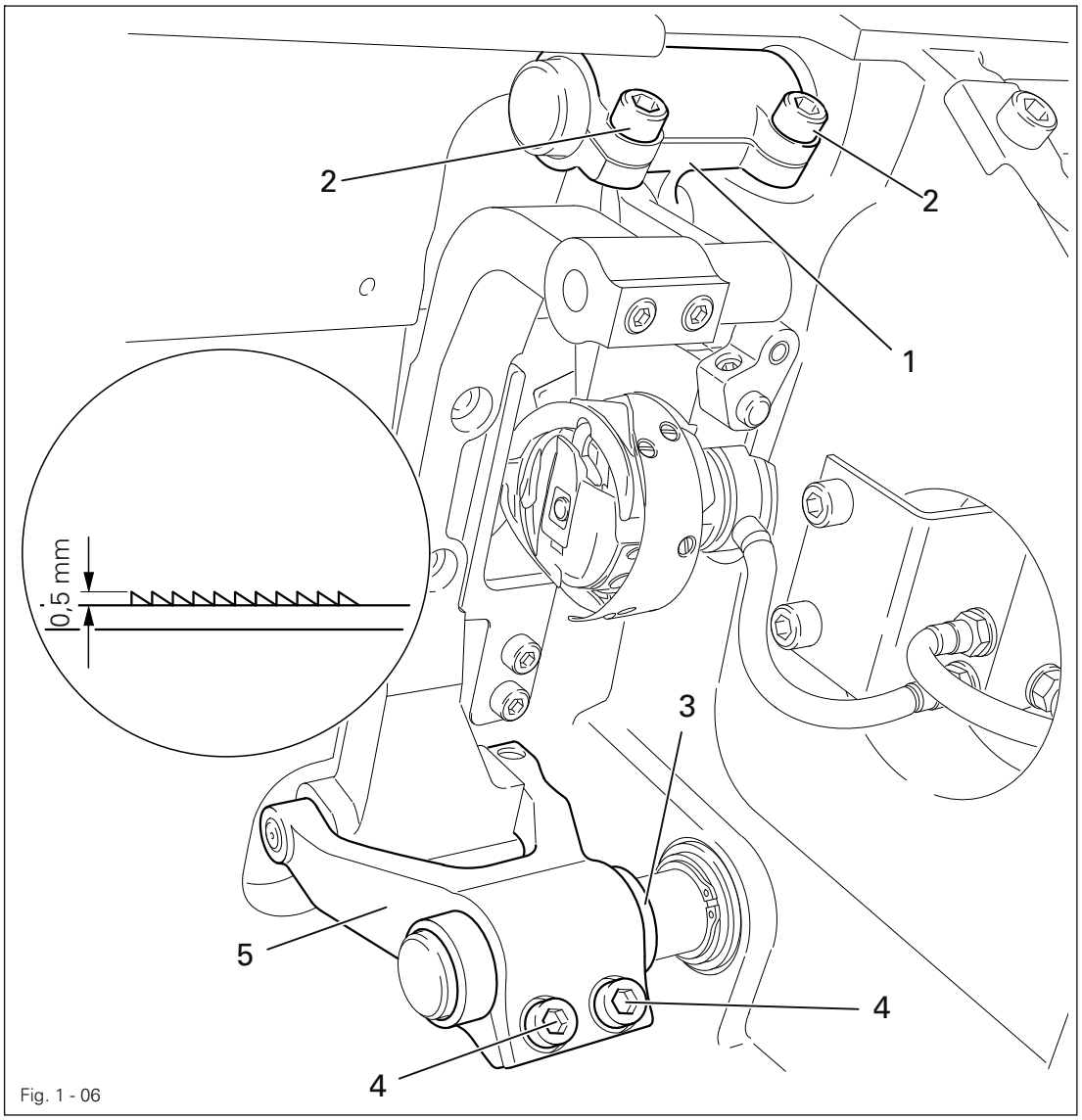

Fig. 1 - 06

- Turn lifting crank **1** (screws **2**) and eccentric sleeve **3** (screws **4**) in accordance with **requirement 1**.
- Adjust feed bar **5** (screws **4**) in accordance with **requirement 2**.

1.05.07 Feeding stroke difference

Requirement
With the maximum stitch length set, when the balance wheel is turned the feeding strokes of the needle and the bottom feed dog should be the same.

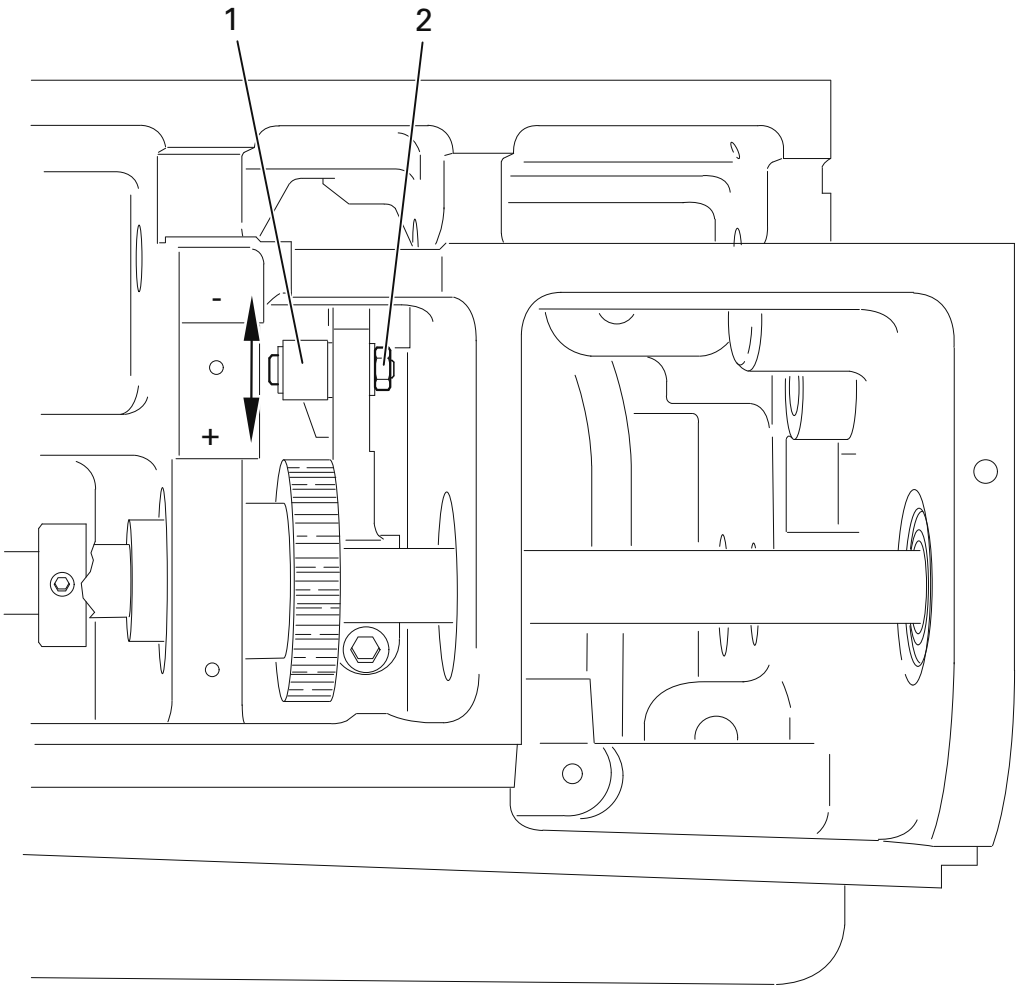

Fig. 1 - 07

- With connecting rod **1** (nut **2**) increase ("**+**") or reduce (**-**) the needle feed stroke in accordance with the **requirement**.

1.05.08 Preliminary adjustment of the needle height

Requirement
When the needle bar is positioned at t.d.c. (balance wheel position **0**°), the clearance between the needle point and the needle plate should be **22 mm**.

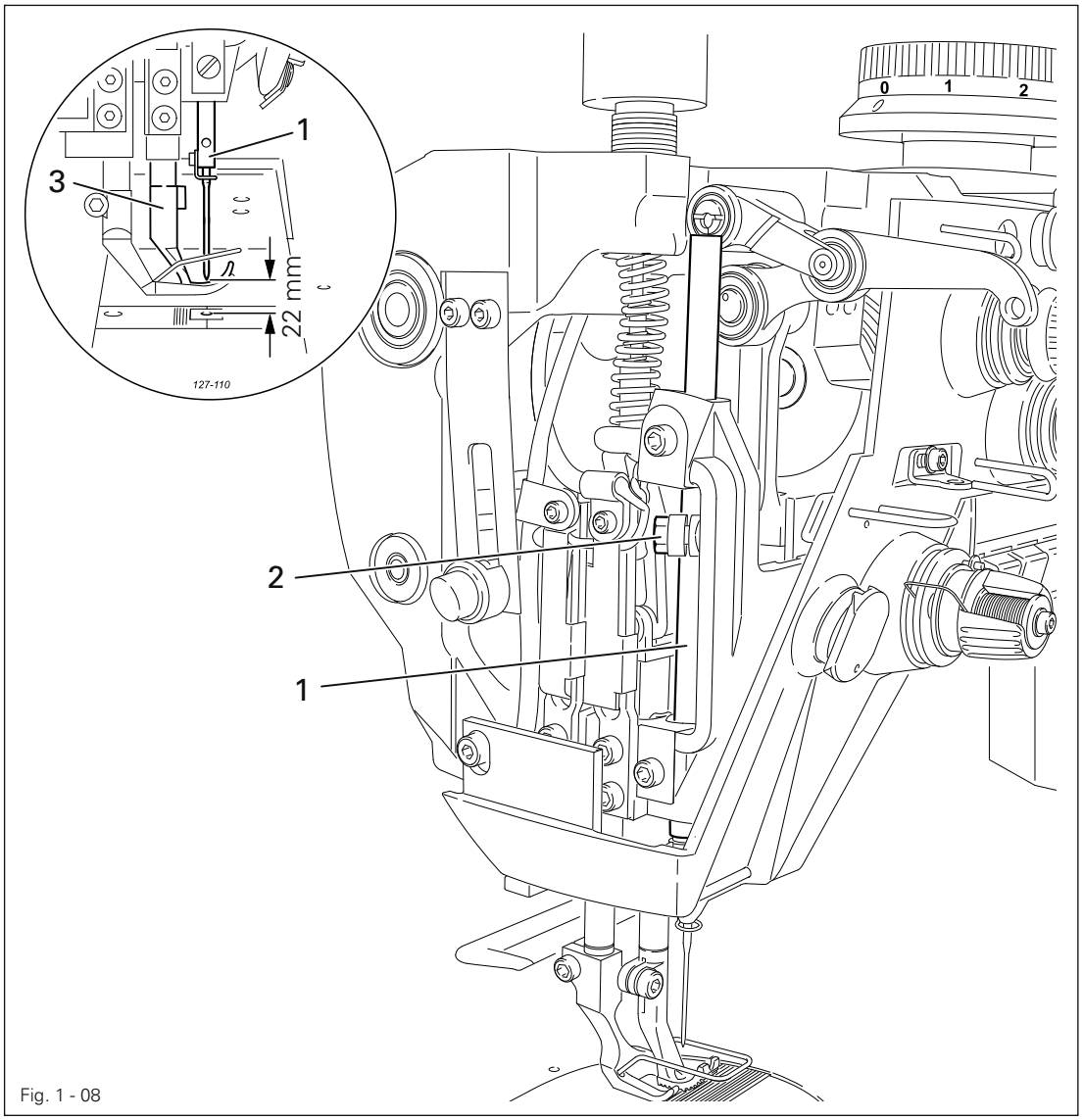

Fig. 1 - 08

- Without turning it, re-position needle bar **1** (screw **2**) in accordance with the **requirement**.

Make sure that needle bar **1** and foot **3** do not collide.

1.05.09 Needle rise, hook clearance and needle height

Requirement

With the stitch length set at "**4.5**" and in the needle rise position (see table)

1. The hook point **5** should be positioned at "needle centre" with a hook-to-needle clearance of **0.05 – 0.10 mm**.
2. The top of the needle eye should be positioned **0.8 mm** below hook point **5**.

Needle rise position

Model **C**: Balance wheel position **202° / 2.0 mm**

Model **C/D**: Balance wheel position **204° / 2.4 mm**

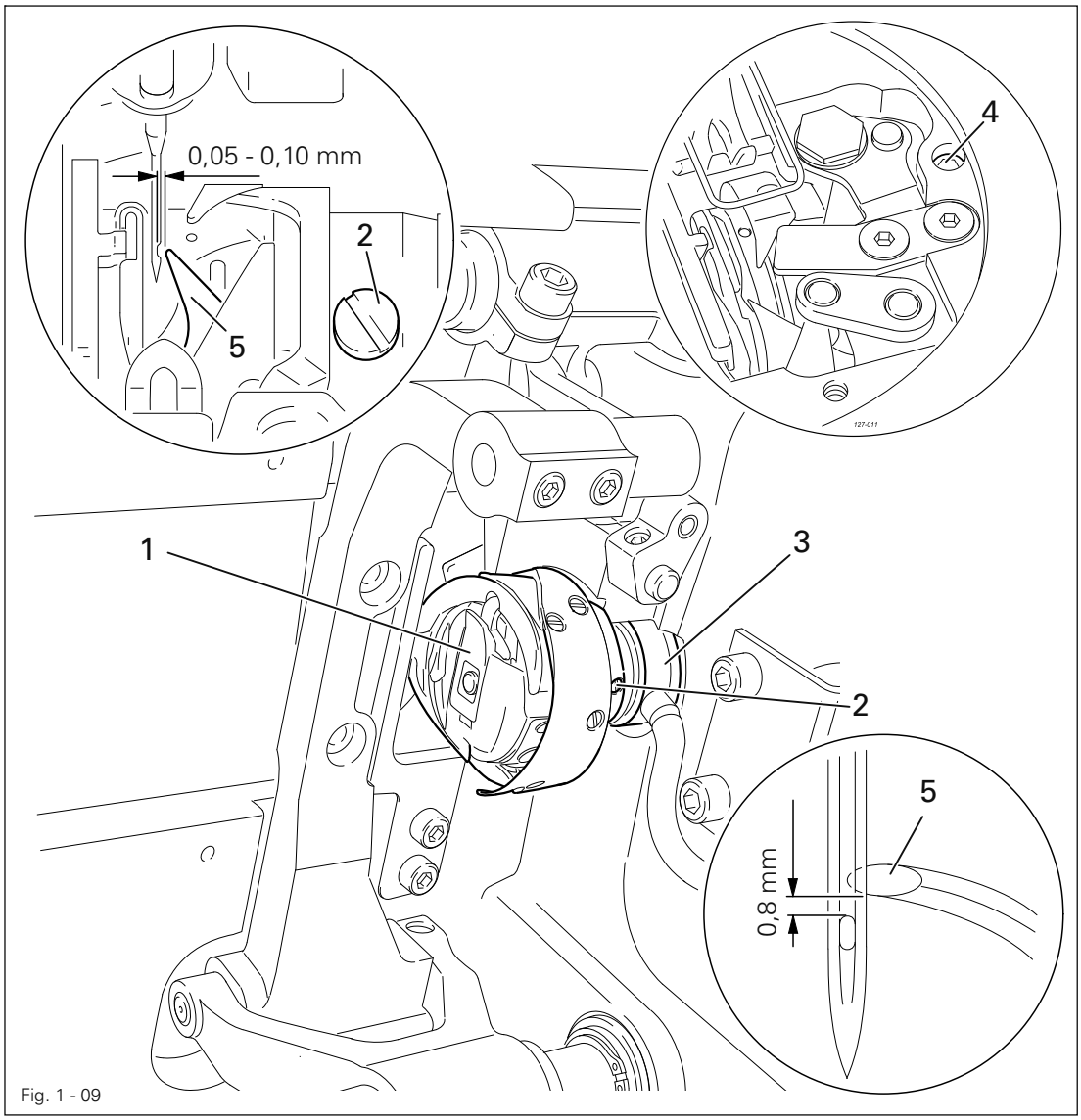

Fig. 1 - 09

- Set stitch length "**4.5**" and bring the balance wheel into the needle rise position.
- Adjust hook **1** (screws **2**) in accordance with **requirement 1**.
- Bring oil distributor ring **3** (screw **4**) into contact with hook **1**.
- Without turning it, re-position the needle bar in accordance with the **requirement 2**.

1.05.10 Top feed stroke

Requirement
With adjustment wheel **1** set at "**5**", the top feed dog **7** and presser foot **4** should each rise by **5.0 mm**.

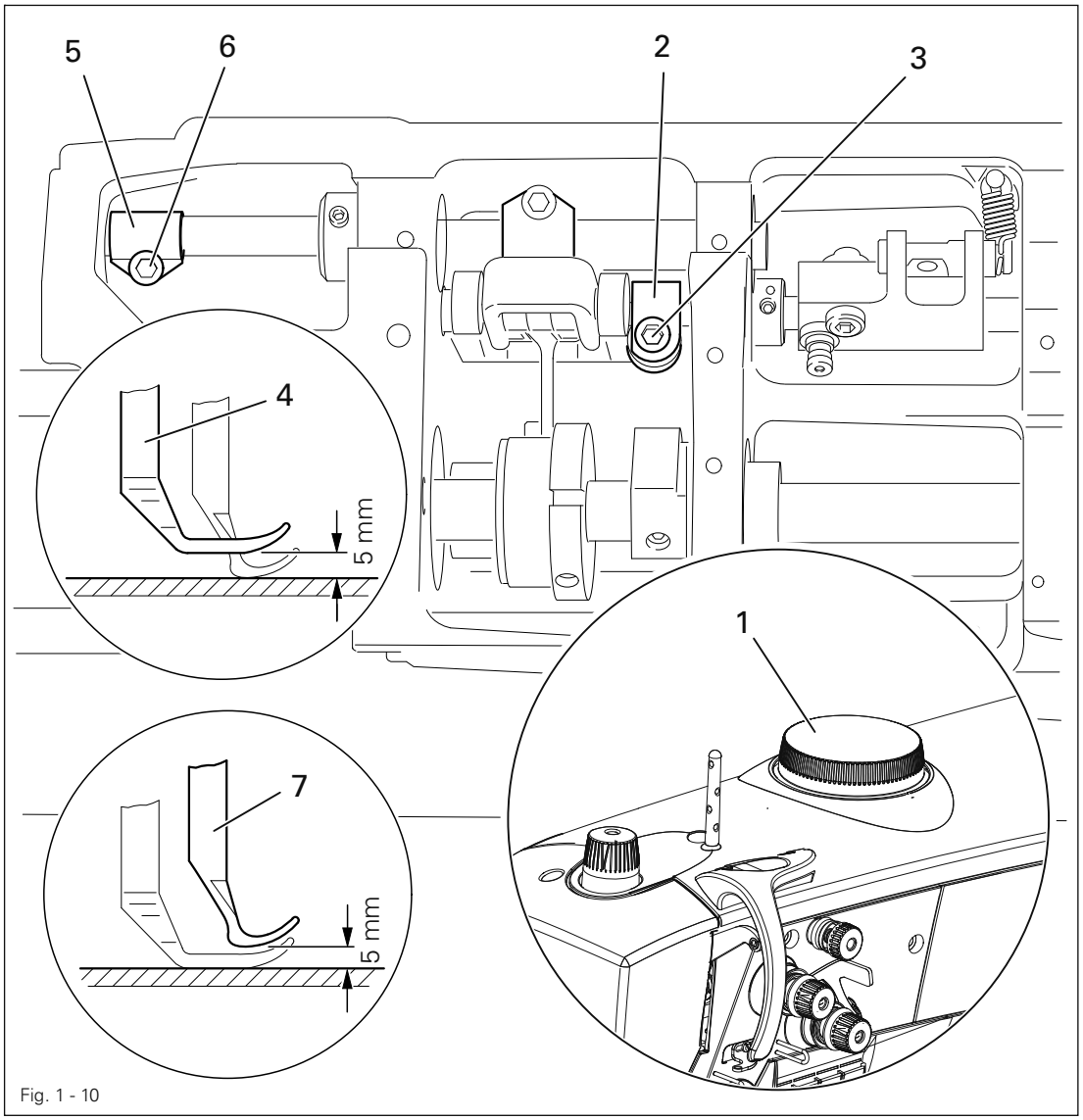

Fig. 1 - 10

- Remove the bottom feed dog and set adjustment wheel **1** at "**5**".
- Loosen the screws of the needle plate, place the metal gauge over the opening of the needle plate slot so that both sewing feet can be lowered onto the metal gauge.
- For the preliminary adjustment, adjust crank **2** (screw **3**) so that there is a clearance of **5 mm** between presser foot **4** and the needle plate.
- Adjust crank **5** (screw **6**) so that top feed dog **7** and presser foot **4** have the same stroke.
- Check the adjustment in accordance with the **requirement**, and correct if necessary.

1.05.11 Top-feed lifting motion

Requirement
The top feed dog should just have reached the needle plate when the presser foot lift is set at **5 mm** and the needle descending from above is **2 mm** above the needle plate.

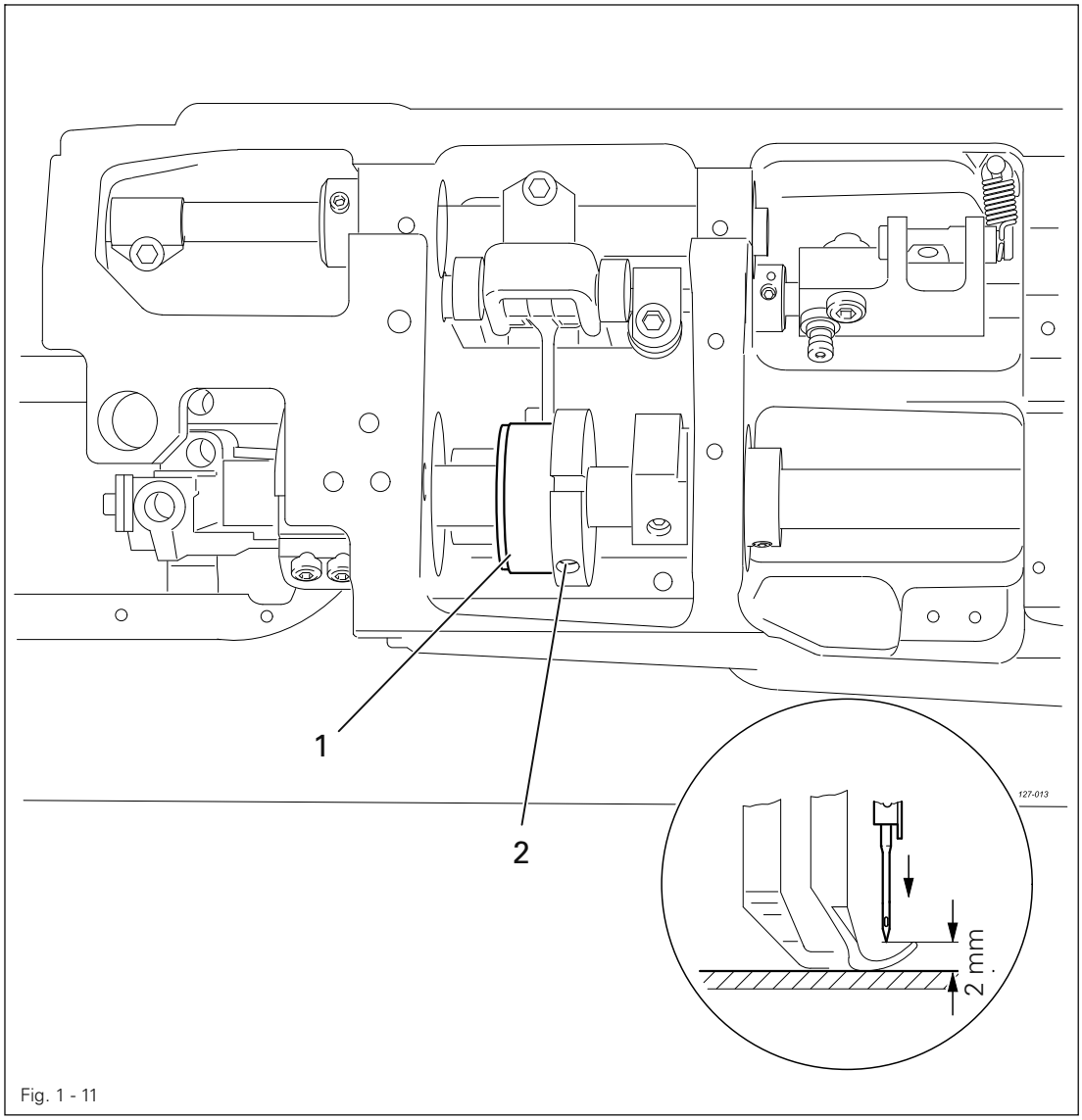

Fig. 1 - 11

- Turn eccentric **1** (screw **2**) in accordance with the **requirement**.

1.05.12 Adjusting the potentiometer for speed reduction

1.05.12.01 On machines with drive P45 PD2-L and P74 ED-L

- Switch on the machine
- Set the smallest stroke "**0**".
- Using the stroke adjustment function, call up the smallest stroke (LED off), see the Control Panel Instruction Manual.
- Call up parameter "**501**" and press key "C+" to save the bottom value.
- Set the inner adjustment wheel at maximum stroke "**9**".
- Using the stroke adjustment function, call up the largest stroke (LED on), see the Control Panel Instruction Manual.
- Call up parameter "**502**" and press key "C+" to save the top value.



The speed is adjusted in accordance with Chapter **3.03 Maximum Speed in the Instruction Manual.**

1.05.12.02 On machines with drive PF 321

- Press "P" on the control panel, while simultaneously switching the machine on.
- Enter the code **3112** via the numbered keys and confirm by pressing "**E**".
- Select parameter **501** via the numbered keys and confirm by pressing "**E**".
- Set the smallest stroke "**0**".
- Using the stroke adjustment function, call up the small stroke (LED off), see instruction manual.
- Take over the value displayed under parameter **501** by pressing "**+**".
- Select parameter **502** via the numbered keys.
- Set the largest stroke "**0**".
- Using the stroke adjustment function, call up the large stroke (LED on).
- Take over the value displayed under parameter **502** by pressing "**+**".
- Press "**P**" twice to quit the input level
- The new values are taken over when sewing is started, and these are maintained evenafter the machine is switched off.



The speed is adjusted in accordance with Chapter **3.03 Maximum Speed** in the instruction manual.
Under parameter **1**17 the speed at max. stroke adjustment can be reduced again.

1.05.13 Machine drive home position

1.05.13.01 On machines with drive P45 PD2-L

- Switch on the machine.
- When the machine is commissioned, "**Pulley**" appears on the display.
- Call up the parameter input by pressing the scroll key.
- Press the **TE key** to switch the function keys to input function (LED in the **TE key** is illuminated).
- Press the corresponding **+/- keys** to select parameter "**798**" and select the service level **C**, see chapter Selecting the User Level in the separate instruction manual for the control panel.
- Select parameter "**800**" by pressing the corresponding **+/- keys**.
- Check whether the value is set at "**1**" (balance wheel turns towards operator) and alter if necessary.
- Press the **scroll key** until "**Pulley**" appears on the display.
- If the pedal is operated, the control unit carries out a teach-in operation.
- The machine runs at low speed until the teach-in operation is completed.
- This operation cannot be interrupted.
- After the teach-in operation, the "**Pulley**" disappears from the screen - display returns to standard.
- Select parameter "**700**" by pressing the **+/- keys**.
- Sew one stitch by operating the pedal.
- Turn the balance wheel in the direction of rotation until the needle point, **descending from above**, is flush with the top edge of the needle plate.
- Conclude the adjustment of the sewing motor by pressing the **scroll key**.

1.05.13.02 On machines with drive P74 ED-L



On machines with EcoDrive **P74 ED-L** it is not necessary to check the basic position of the machine drive unit.
These machines are equipped with an automatic sewing head recognition function.

1.05.13.03 On machines with drive AB 321

- Press button "P" on the control panel, while simultaneously switching the machine on.
- Enter code 3112 via the numbered keys and confirm by pressing "E".
- Enter parameter 290 via the numbered keys and confirm by pressing "E".
- Select mode 42 by pressing the +/- buttons.
- Press "P" twice to quit the input level.
- The new values are taken over when sewing is started, and these are maintained even after the machine is switched off.

1.05.13.04 On machines with drive PF 321

- Press button "P" on the control panel, while simultaneously switching the machine on.
- Enter code 3112 via the numbered keys and confirm by pressing "E".
- Enter parameter 290 via the numbered keys and confirm by pressing "E".
- Select mode 00 by pressing the +/- buttons.
- Press "P" twice to quit the input level.
- The new values are taken over when sewing is started, and these are maintained even after the machine is switched off.

1.05.14 Bobbin winder

Requirement

1. When the bobbin winder is engaged, the winding spindle must be driven reliably. When it is disengaged, friction wheel **3** should not be touching drive wheel **1**.
2. When it is switched off, the bobbin winder must click securely into its end position (knife raised).

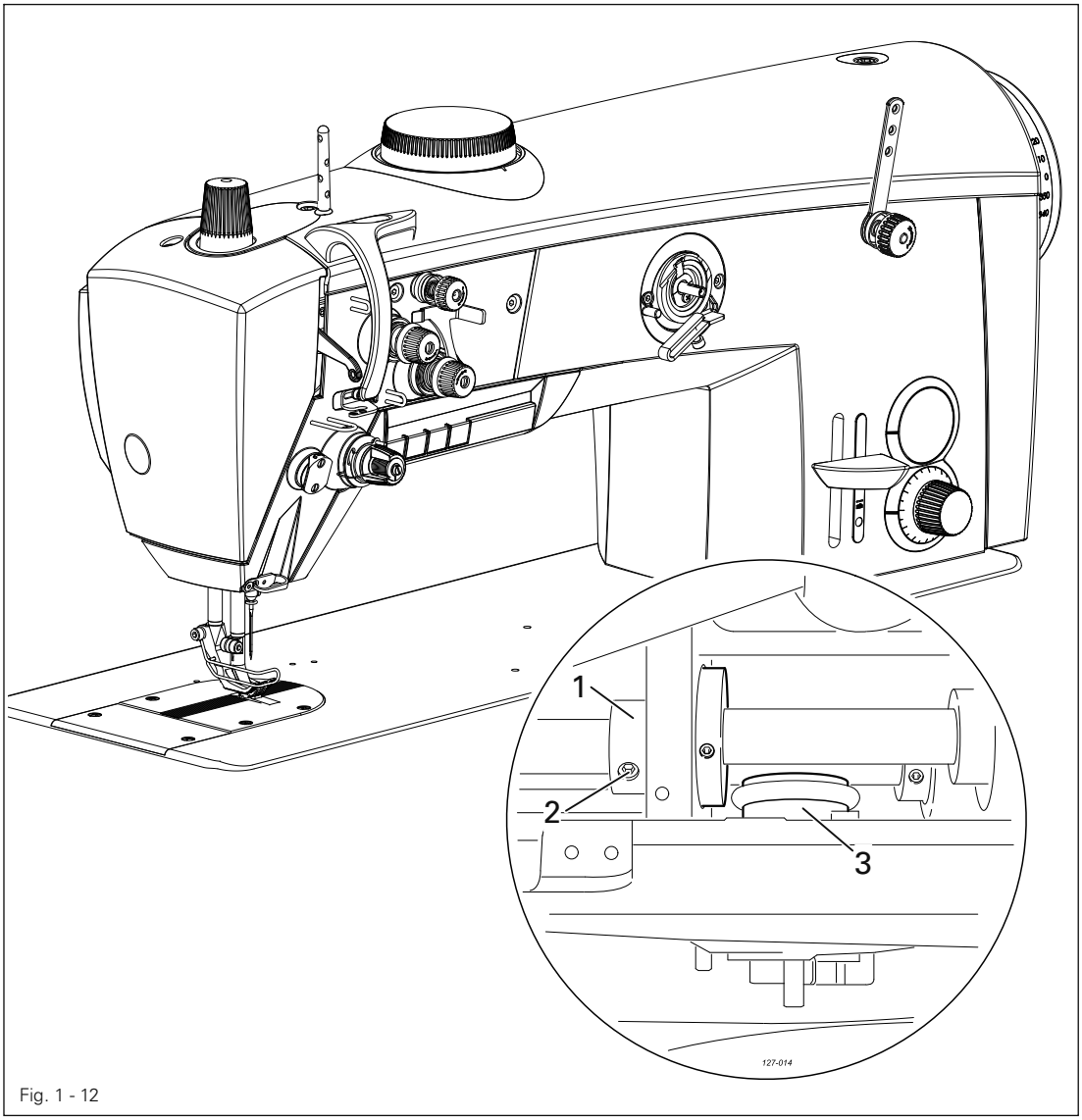

Fig. 1 - 12

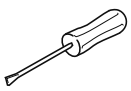

- Adjust drive wheel **1** (screw **2**) in accordance with the **requirement**.

1.05.15 Thread check spring and thread regulator

Requirement

1. The movement of thread regulator **3** must be completed when the needle point enters the material.
2. When the thread loop is at its largest while being passed around the hook, the check thread spring **3** should rise slightly from the rest **1**.

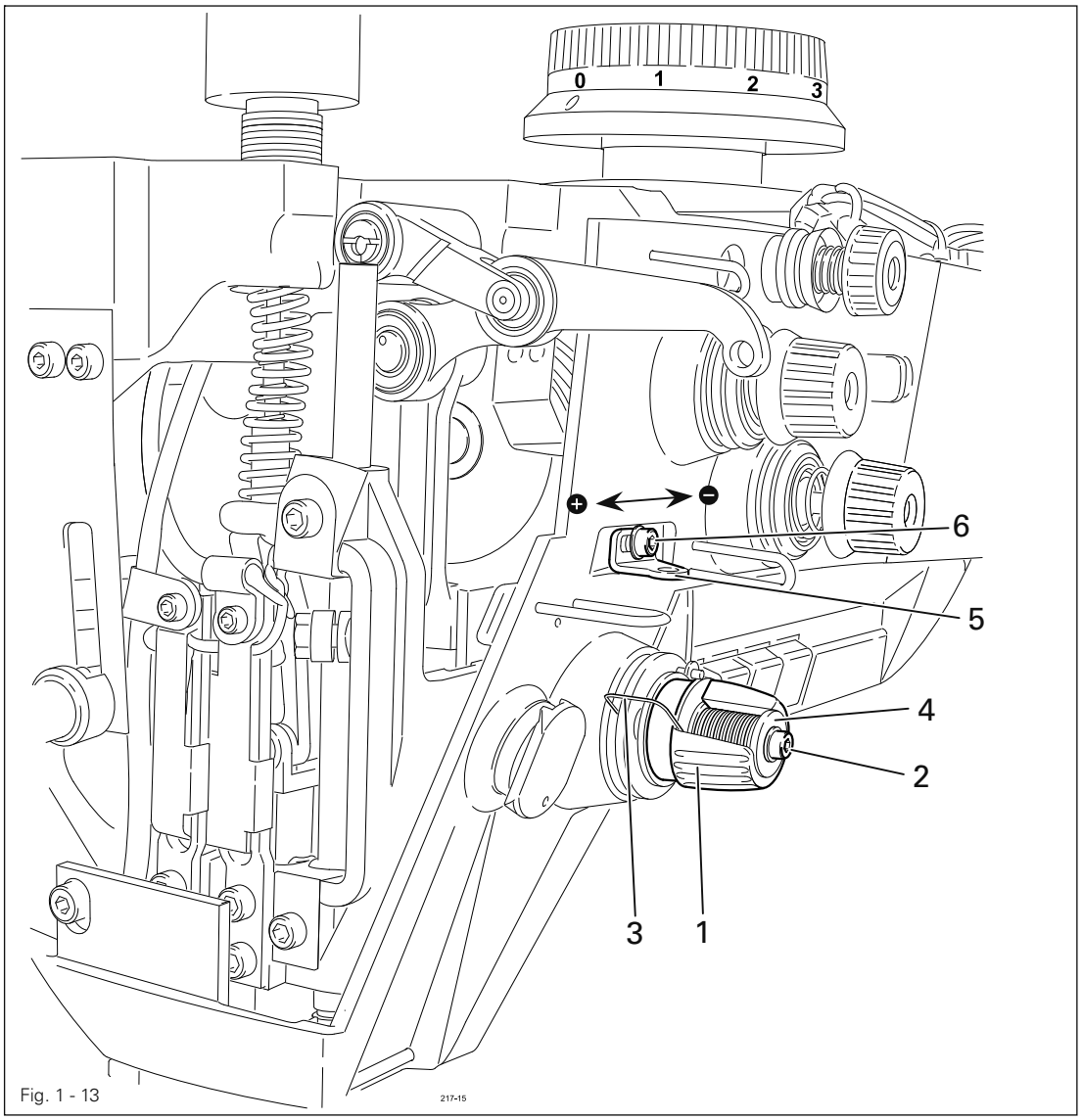

Fig. 1 - 13

- Position rest **1** (screw **2**) in accordance with **requirement 1**.
- Turn sleeve **4** (screw **2**) to adjust the tension of thread check spring **3**.
- Position thread regulator **5** (screw **6**) in accordance with **requirement 2**.

For technical reasons it may be necessary to deviate from the indicated spring stroke or spring tension.
Move thread regulator **5** (screw **6**) towards ("+") (= more thread) or ("-") (= less thread).

1.05.16 Sewing foot pressure

Requirement
The material should be fed properly even at maximum speed and with the smallest stroke.

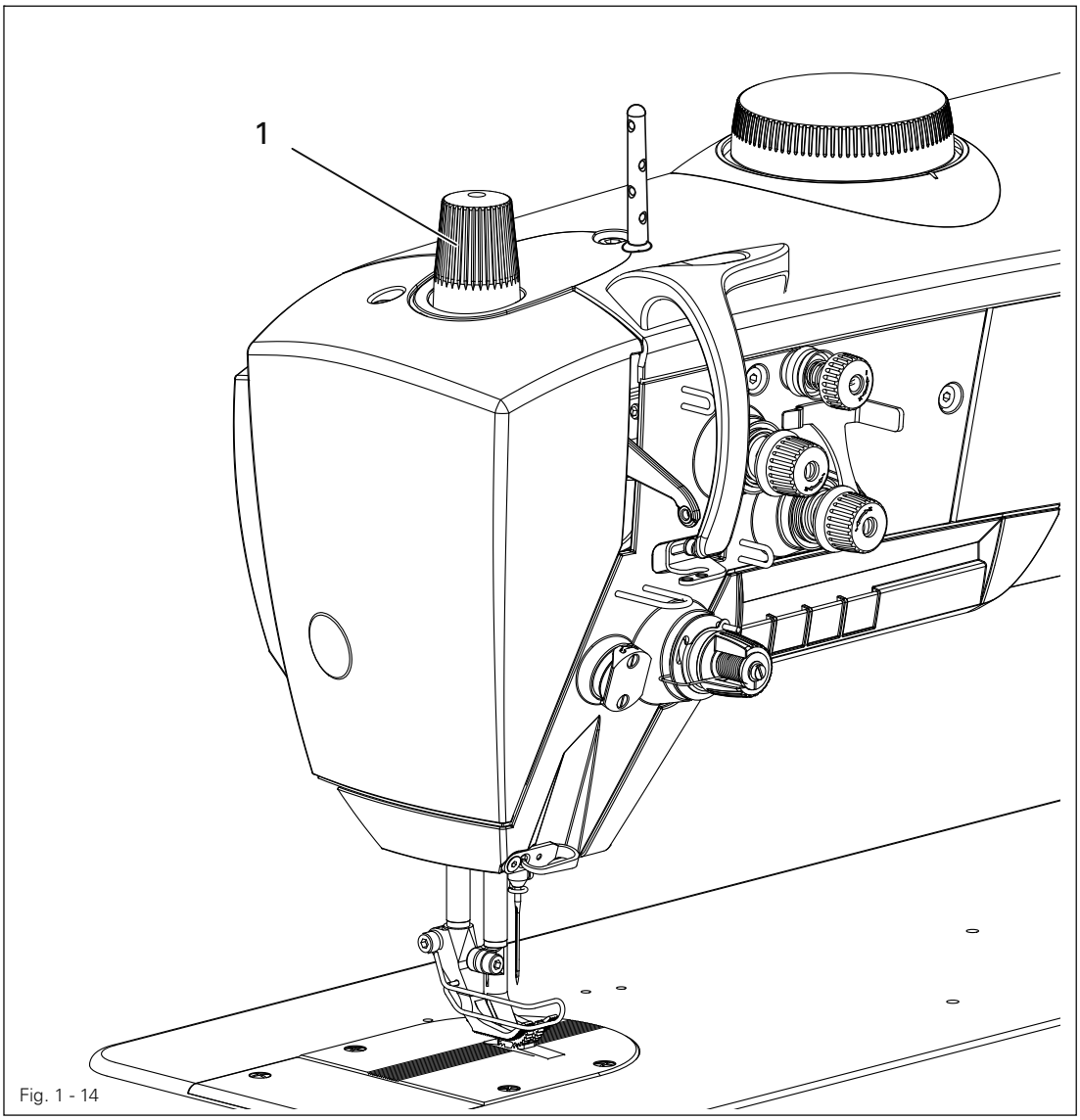

Fig. 1 - 14

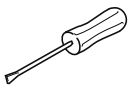

- Turn adjustment wheel **1** in accordance with the **requirement**.

1.05.17 Lubrication

Requirement
After a running time of **10** seconds a thin film of oil should be visible on paper strip **1** when this is held over the hook.

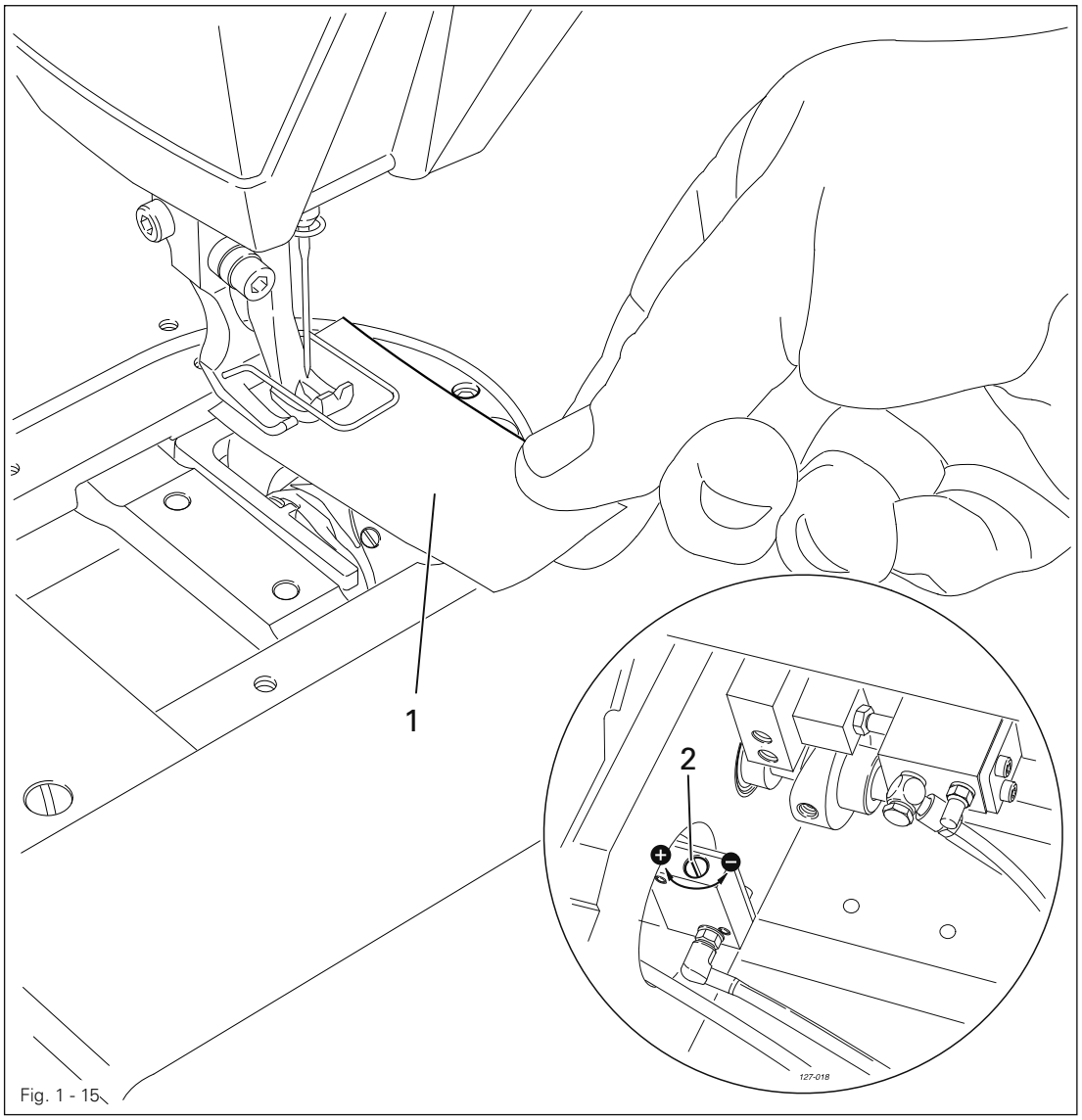

Fig. 1 - 15

- Check that the machine is filled with oil and that the oil lines are free of air.
- Run the machine for **2 – 3 min**.

Do not put your hands into the needle area when the machine is running!
Danger of injury from moving parts!

- With the machine running, hold paper strip **1** against the hook and check the **requirement**.
- If necessary, regulate amount of oil with screw **2**.

1.05.18 Limiting the stitch length

When exchanging the parts kit with stitch lengths differing from the as-delivered state of the machine, limit the max. stitch length using stitch adjuster **4**.

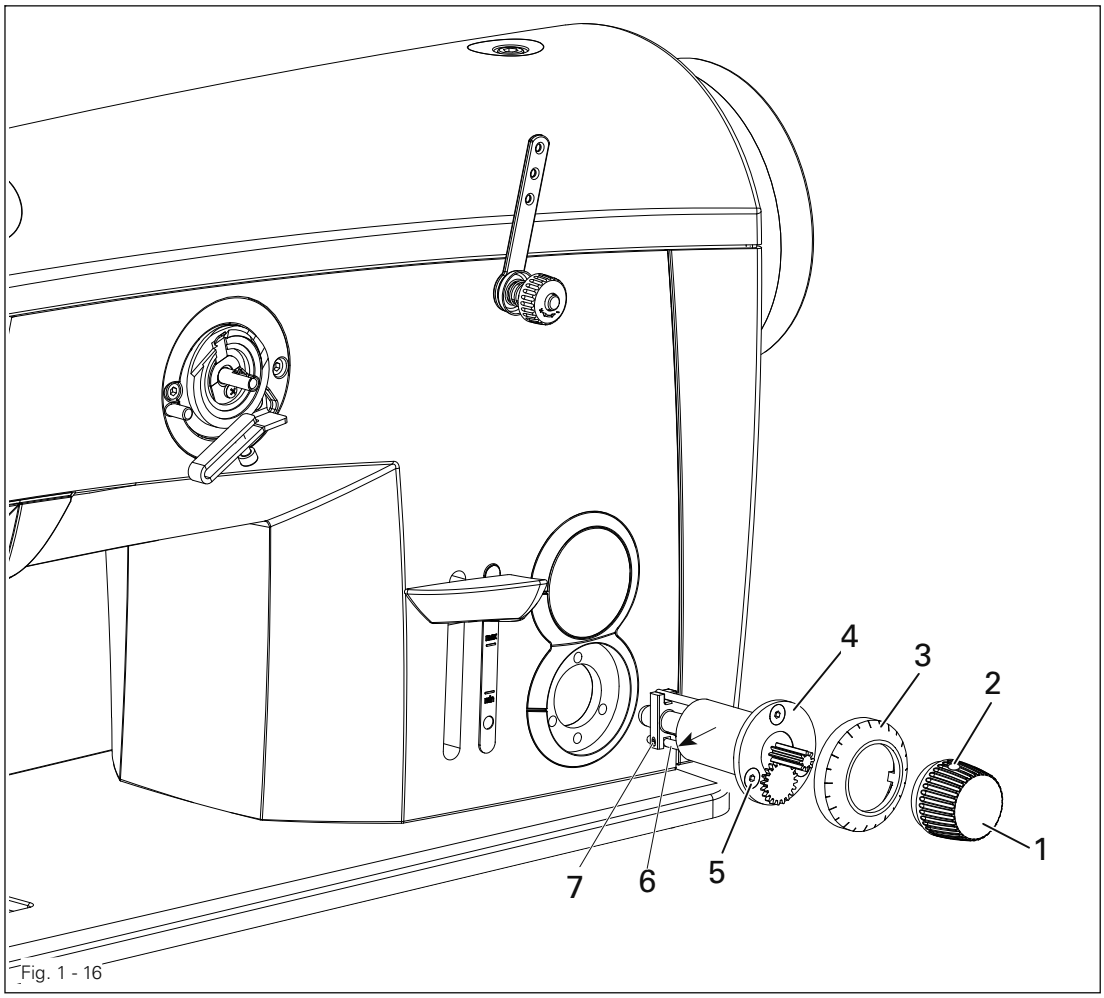

Fig. 1 - 16

- Set the desired max. stitch length at control button **1**
  (on model CN = **6.0** mm, on model CN**9** + C/DN**9** = **9** mm)
- Remove adjustment knob **1** (screws **2**) and scale dial **3**.
- Remove adjustment unit **4** (screws **5**).
- Bring lineal **6** (screw **7**) to the unit using stitch adjuster **4** (see arrow).
- Replace adjustment unit **4**, scale dial **3** and adjustment knob **1**.

1.06 Adjusting the thread trimmer -900/91

1.06.01 Basic position of the thread trimmer

Requirement

1. When the thread trimmer is in its resting position (cylinder extended), the point of thread catcher **6** should be flush with the cutting edge of knife **7** (see arrow).
2. The roller lever **3** should have a clearance of **1 mm** to the connecting piece.

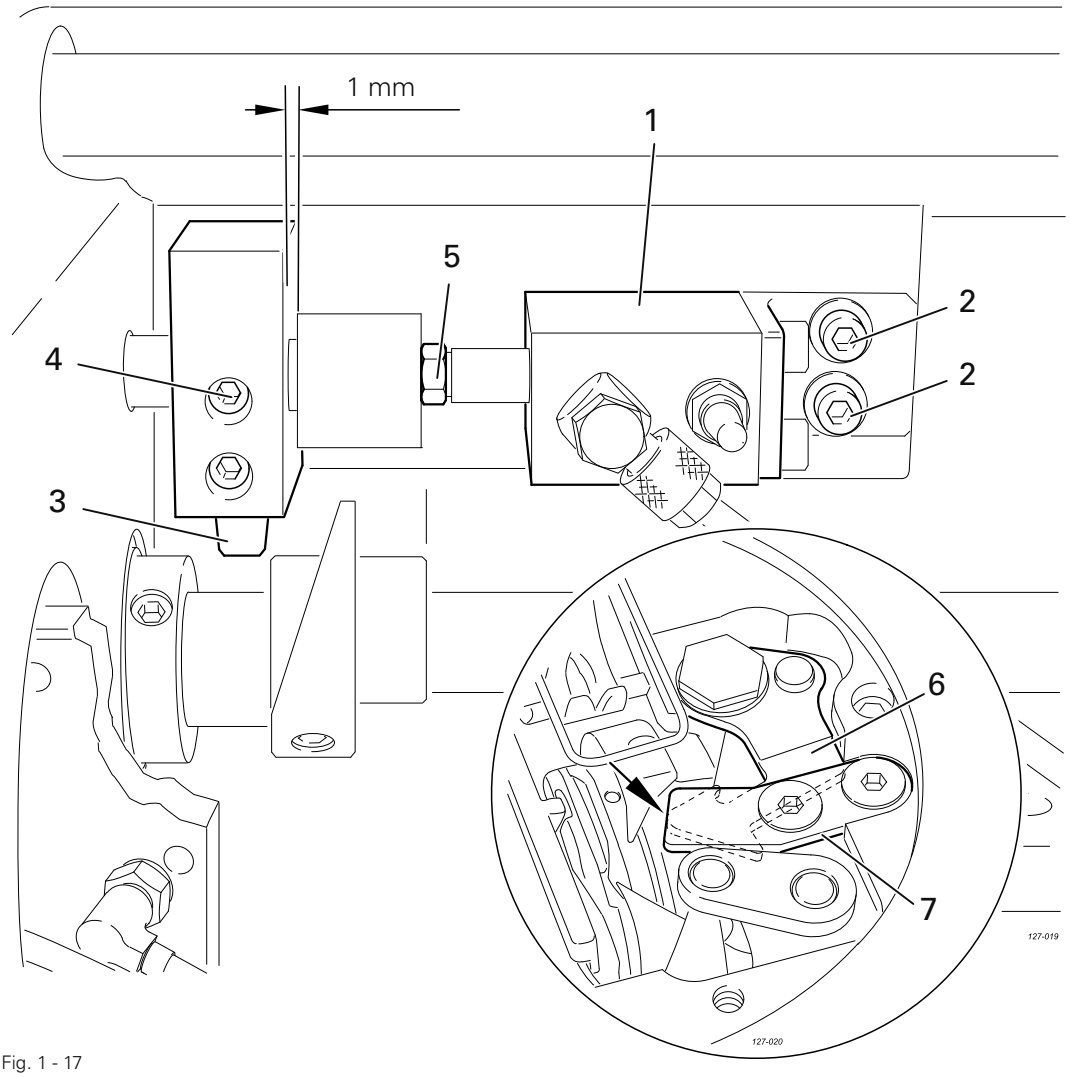

Fig. 1 - 17

- Adjust thread trimmer **1** (screws **2**) in accordance with **requirement 1**.
- Adjust roller lever **3** (only screw **4**) in accordance with **requirement 2**.

1.06.02 Control cam to roller lever clearance (resting position)

Requirement
When the thread trimmer is in its resting position (balance wheel position **270°**) there should be a clearance of **0.1 mm** between the roller lever **5** and the outside edge of control cam **1**.

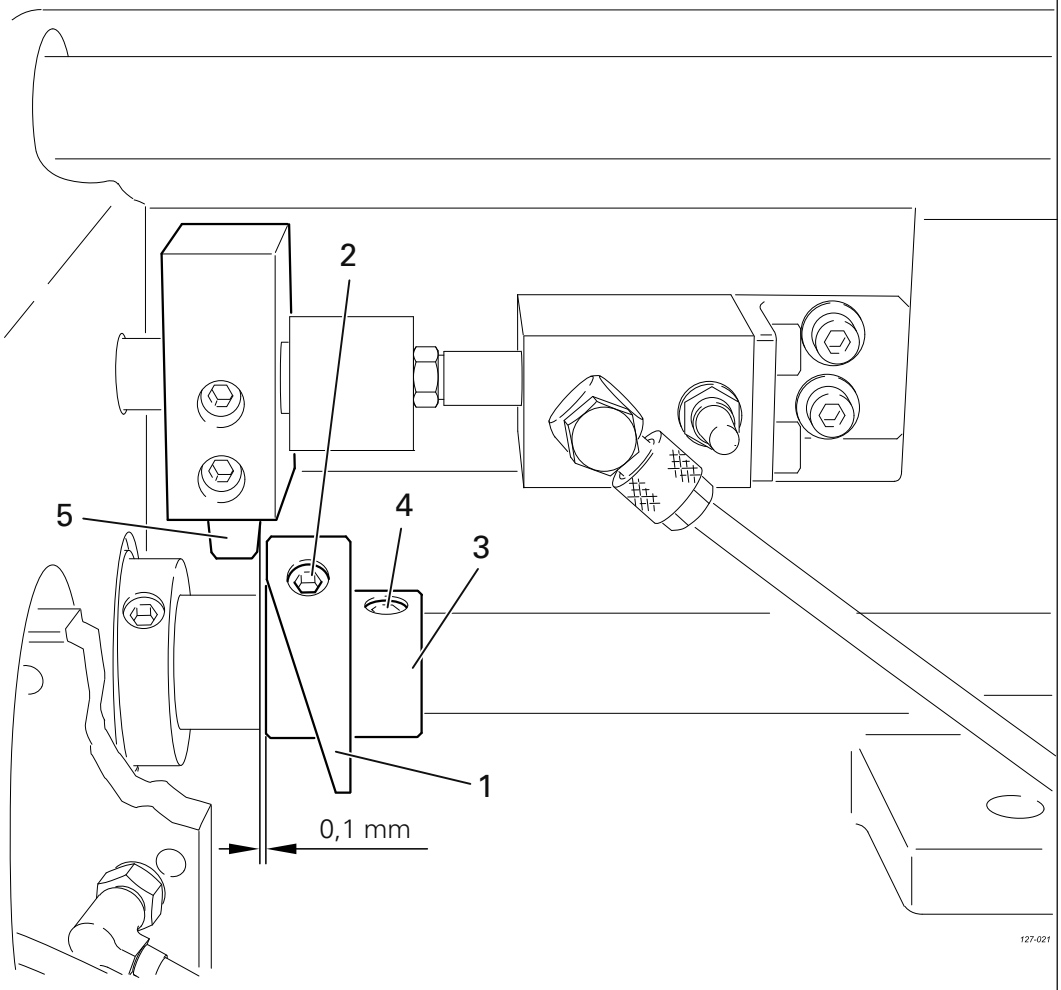

Fig. 1 - 18

- Adjust control cam **1** (screw **2**) together with retaining collar **3** (screw **4**) in accordance with the **requirement**.

1.06.03 Adjusting the control cam

Requirement
When the take-up lever is at the top of its stroke (balance wheel position **70**°), the cutting operation should just have been completed.

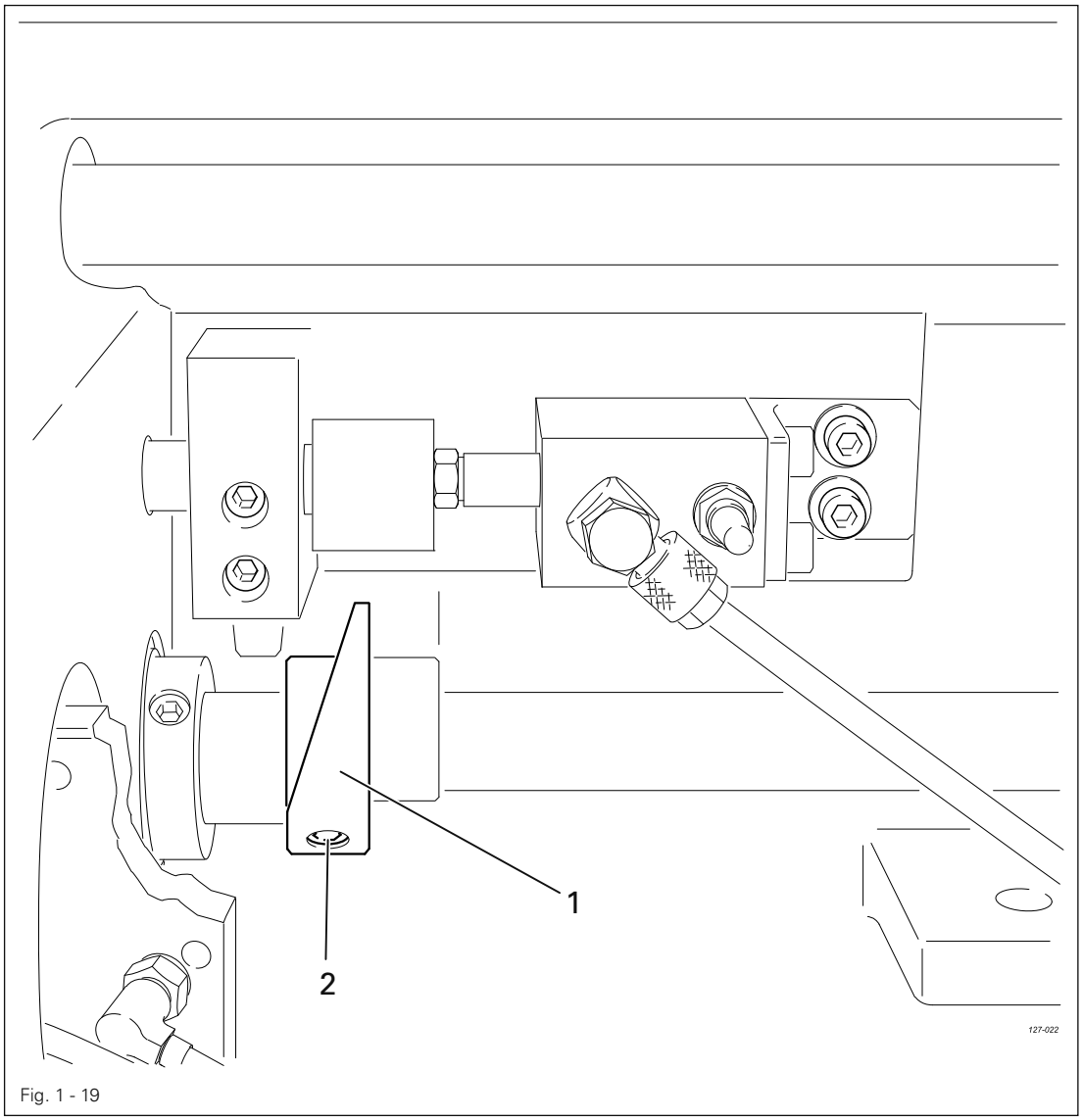

Fig. 1 - 19

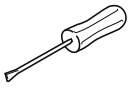

- Adjust control cam **1** (screw **2**) in accordance with the **requirement**.

1.06.04 Knife pressure

Requirement
The thread should be cut reliably at all times.

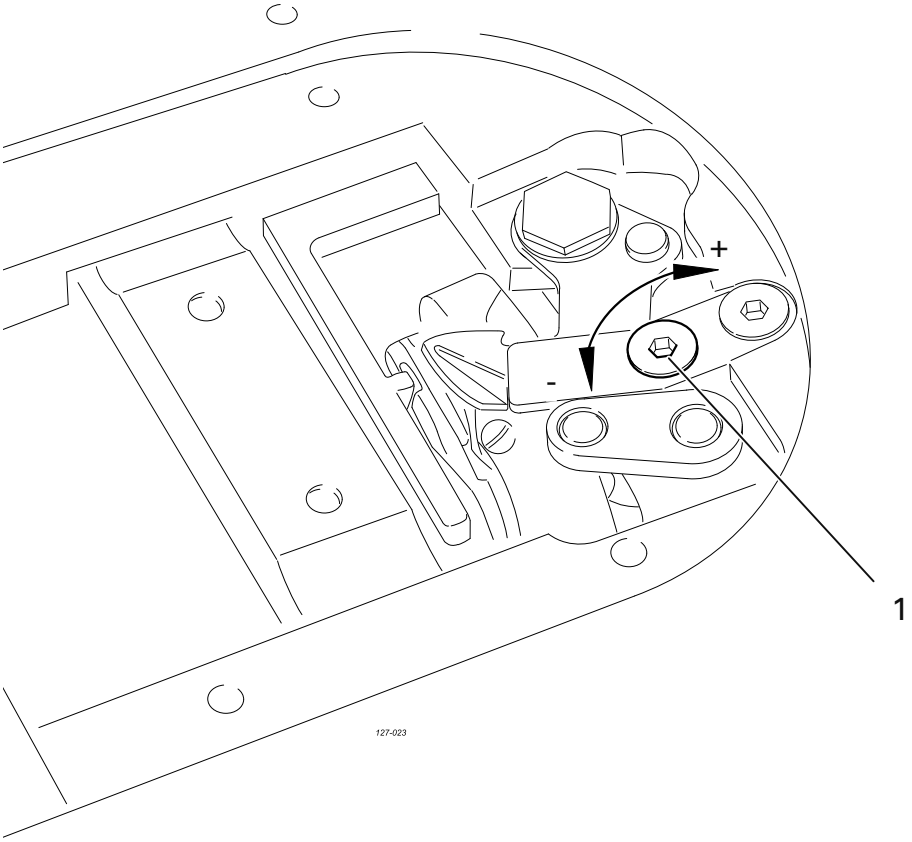

Fig. 1 - 20

- Increase ("+") or reduce ("-") the knife pressure accordingly with screw **1**.

1.06.05 Manual cutting test

Requirement
Both the needle and the bobbin thread should be cut neatly.

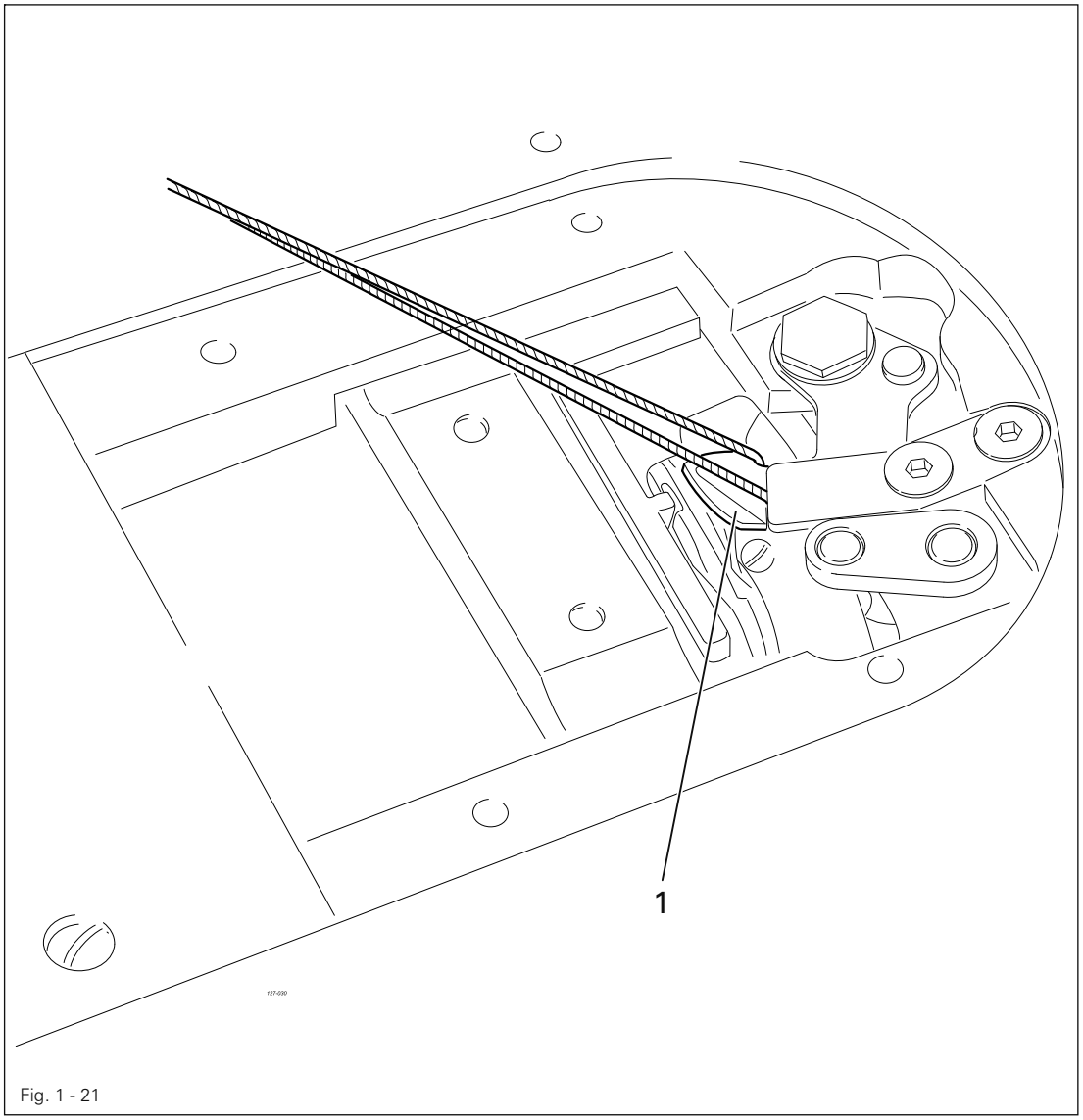

Fig. 1 - 21

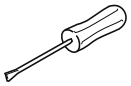

- Bring thread catcher **1** by hand to its front position.
- Take a double thread and place it into the catcher slot.
- Carry out a manual cutting test.
- If the thread is not cut in accordance with the **requirement**, adjust the knife pressure as described in Chapter **1.06.04 Knife pressure**.

2 Circuit diagrams

2.01 Block diagram PFAFF 2235 PLUS with control pack P45 PD-L

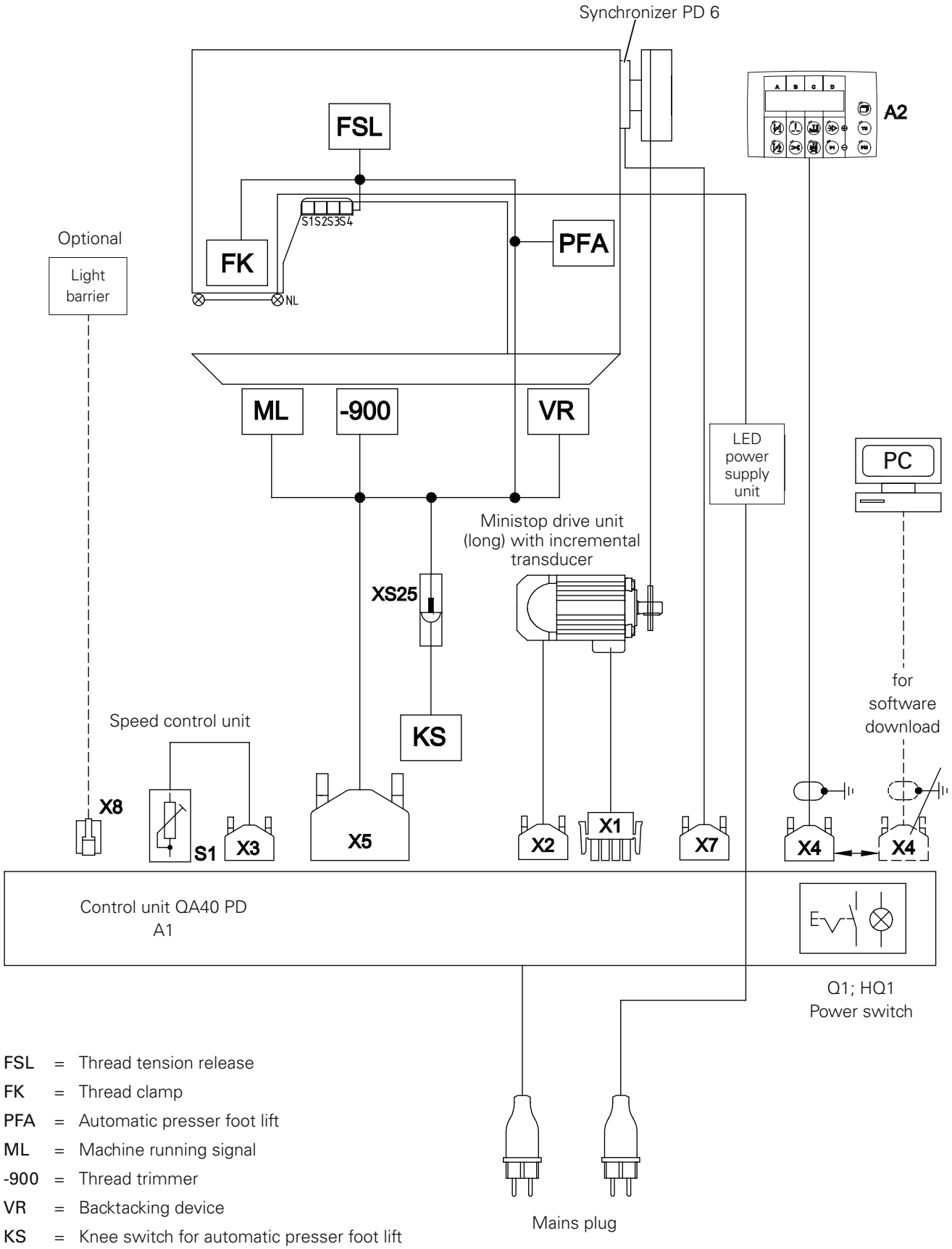

FSL = Thread tension release
FK = Thread clamp
PFA = Automatic presser foot lift
ML = Machine running signal
-900 = Thread trimmer
VR = Backtacking device
KS = Knee switch for automatic presser foot lift

2.02 Block diagram PFAFF 2235 PLUS with AB 321

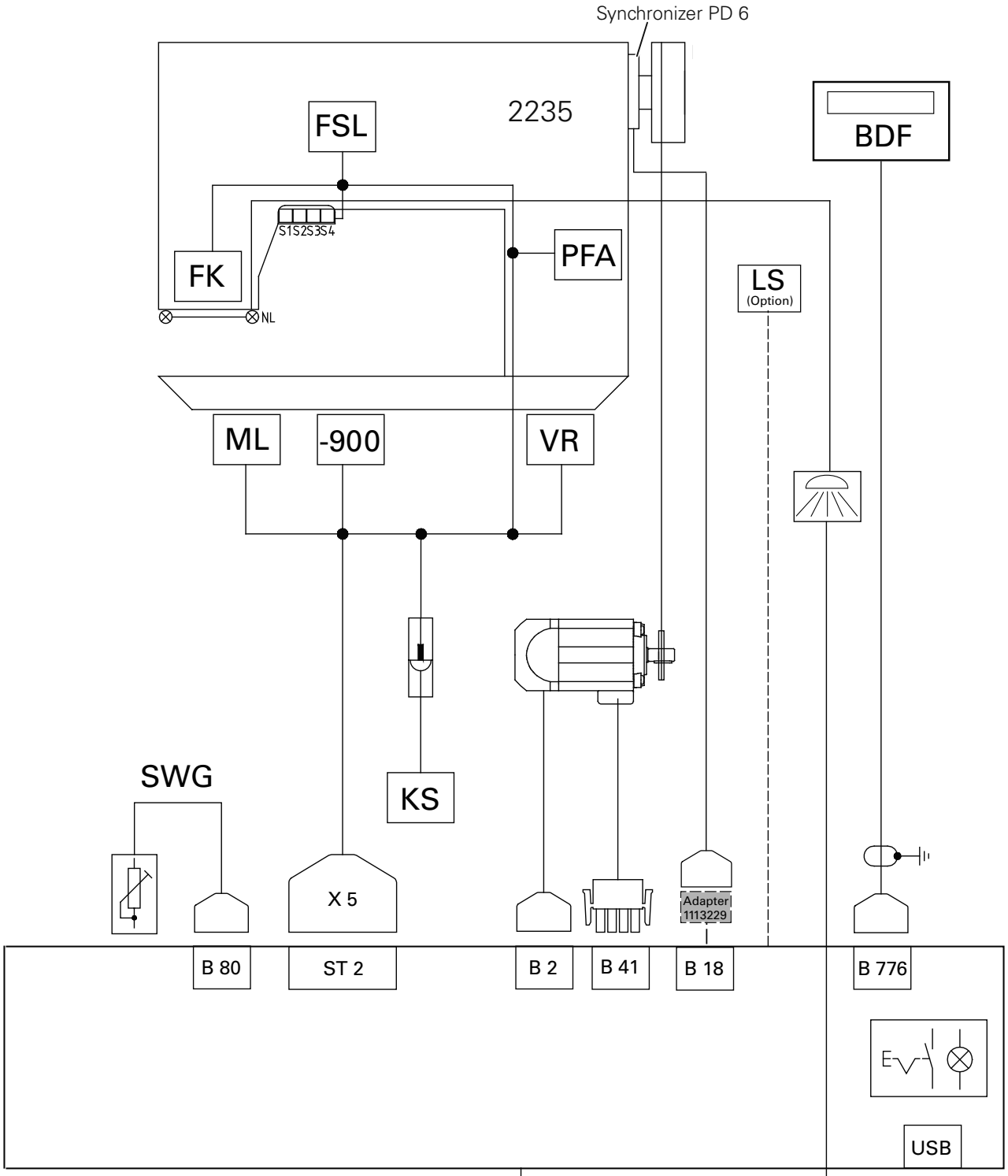

FSL = Thread tension release
BDF = Control panel
FK = Thread clamp
PFA = Automatic presser foot lift
ML = Machine running signal
-900 = Thread trimmer
VR = Backtacking device
SWG = Speedcontrolunit
KS = Knee switch

2.03 Circuit diagrams

Reference list for the Circuit diagrams 91-191 520-95

A1	Controller P45 PD-L
A2	Control panel (PicoTop)
A16	Keyboard
H1	Sewing lamp
M1	Sewing motor
Q1	Main switch
S1	Pedal speed control unit
S41	Reverse sewing or intermediate backtacks key
S42	Raise needle without thread trimming key
S43	Presser foot lift key
S44	Thread clamp key (increase needle thread tension)
S25	Knee switch for automatic presser foot lift
X1	Sewing motor
X2	Incremental transmitter
X7	Synchronizer PD 6
X3	Speed control unit
X4	PicoTop control panel or RS 232 interface (PC)
X5	Input/output plug
X8	Light barrier plug (optional)
XS25	Knee switch for automatic presser foot lift (S25)
XY1	Y1 automatic presser foot lift (-910/..)
XY2	Y2 backtacking device (-911/..)
XY3	Y3 thread trimmer (-900/..)
XY4	Y4 thread tension release (FSL)
XY6	Y5 Thread clamp (-909/..)
X15	Y15 Machine running signal (ML) optional
Y1	Automatic presser foot lift (-910/..)
Y2	Backtacking device (-911/..)
Y3	Thread trimmer (-900/..)
Y4	Thread tension release (FSL)
Y6	Thread clamp (-909/..)
Y15	Machine running signal (ML) optional

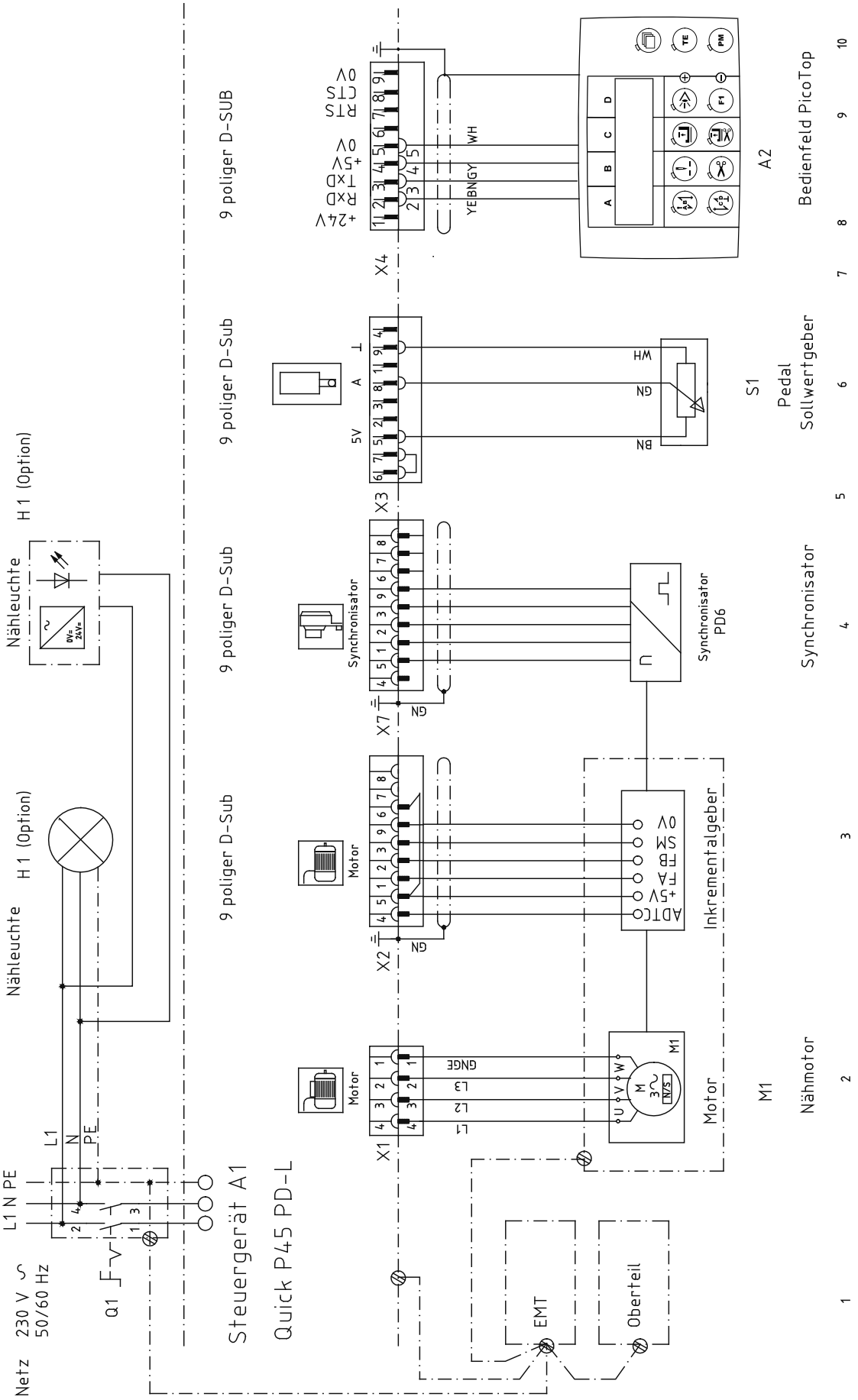
Netz
230 V ~
50/60 Hz
Q1
L1 N PE
L1
N
PE
Nähleuchte
H 1 (Option)
Nähleuchte
H 1 (Option)
Steuergerät A1
Quick P45 PD-L
9 poliger D-SUB
9 poliger D-Sub
9 poliger D-Sub
9 poliger D-Sub
9 poliger D-Sub
X1
X2
X3
X4
X7
Motor
Motor
Synchronisator
Synchronisator
PD6
Inkrementalgeber
ADTC
+5V
FA
FB
SM
0V
GN
GNGE
L1
L2
L3
5V
A
⊥
BN
GN
WH
YE
BN
GY
WH
+24V
RxD
TxD
+5V
0V
RTS
CTS
0V
EMT
Oberteil
M1
Nähmotor
S1
Pedal
Sollwertgeber
A2
Bedienfeld PicoTop
1
2
3
4
5
6
7
8
9
10

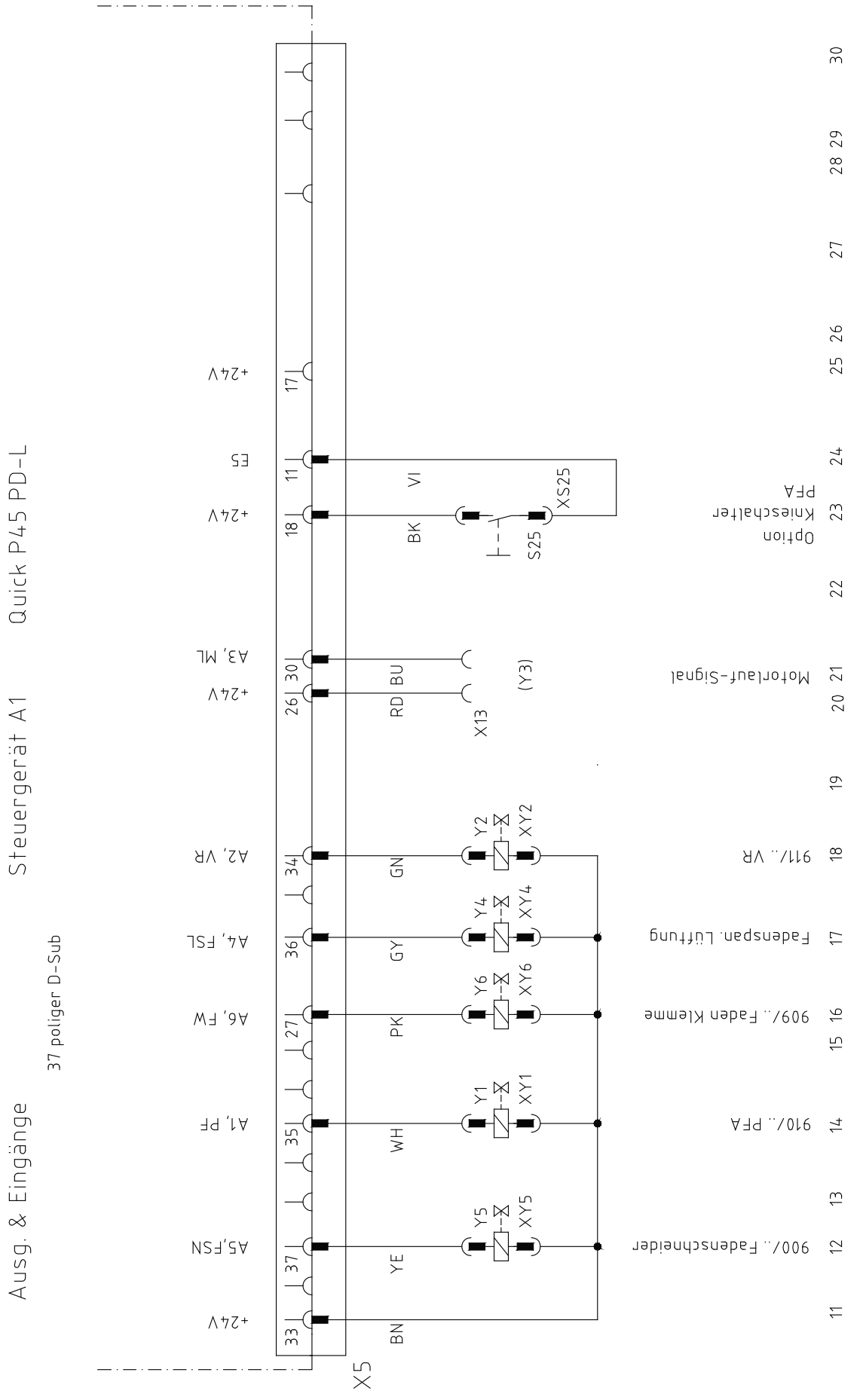
Ausg. & Eingänge
Steuergerät A1
Quick P45 PD-L
37 poliger D-Sub
X5
+24V
F5
+24V
A3, ML
+24V
A2, VR
A4, FSL
A6, FW
A1, PF
A5,FSN
+24V
33
37
35
27
36
34
26
30
18
11
17
BN
YE
WH
PK
GY
GN
RD
BU
BK
VI
Y5
XY5
Y1
XY1
Y6
XY6
Y4
XY4
Y2
XY2
X13
(Y3)
S25
XS25
Option
Knieschalter
PFA
Motorlauf-Signal
900/.. Fadenschneider
910/.. PFA
909/.. Faden Klemme
Fadenspan. Lüftung
911/.. VR
11
12
13
14
15
16
17
18
19
20
21
22
23
24
25
26
27
28
29
30

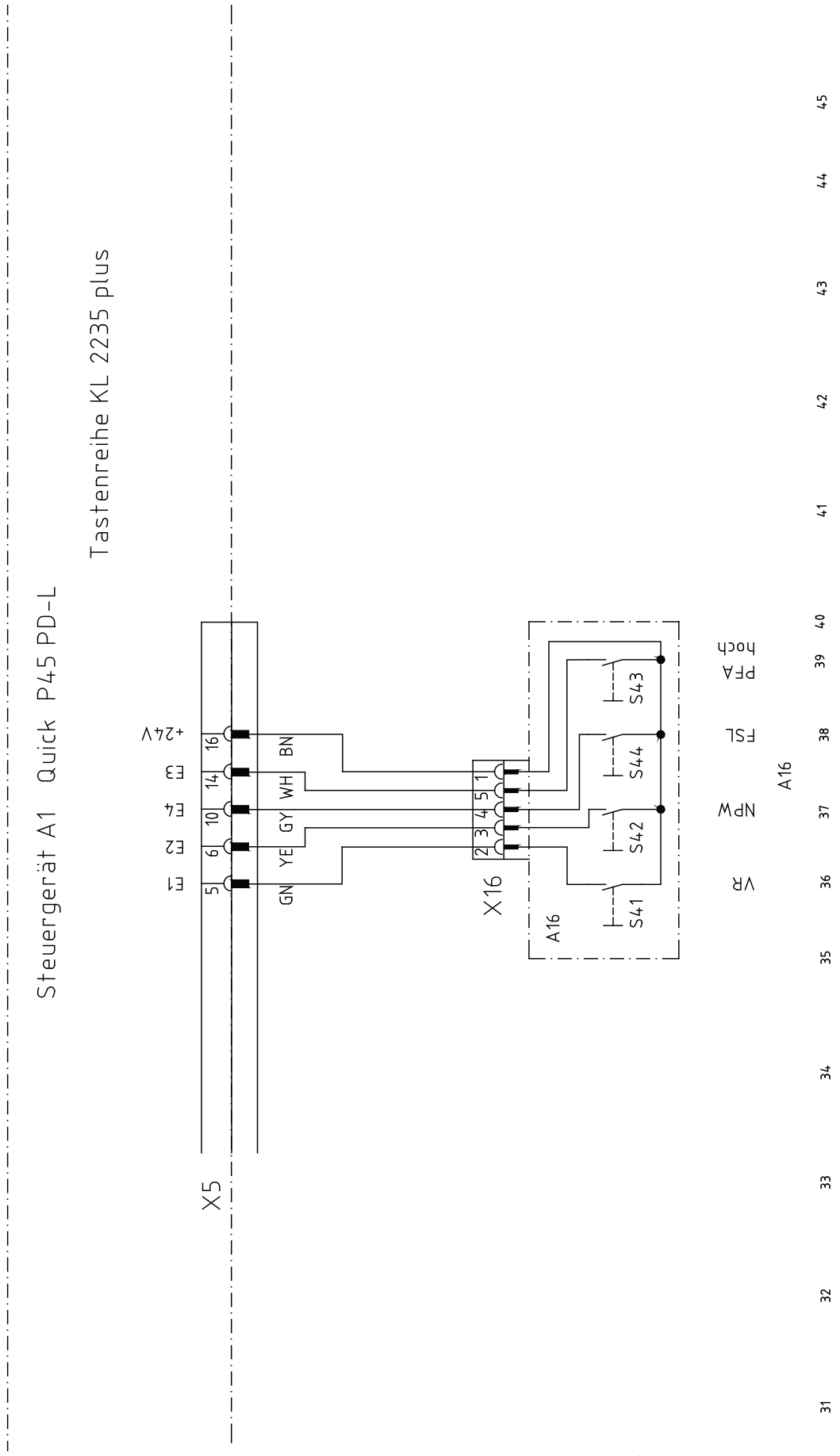
Steuergerät A1 Quick P45 PD-L
Tastenreihe KL 2235 plus
+24V
F3
F4
F2
F1
16
14
10
6
5
BN
WH
GY
YE
GN
X5
X16
A16
S43
S44
S42
S41
PFA hoch
FSL
NPW
VR
A16
45
44
43
42
41
40
39
38
37
36
35
34
33
32
31

PFAFF® Industrial



Europäische Union
Wachstum durch Innovation – EFRE



PFAFF Industriesysteme
und Maschinen AG

Hans-Geiger-Str. 12 - IG Nord
D-67661 Kaiserslautern

Phone: +49-6301 3205 - 0
Fax: +49-6301 3205 1386
E-mail: info@pfaff-industrial.com

Hotlines:
Technical service: +49-175/2243-101
Application consultance: +49-175/2243-102
Spare-parts hotline: +49-175/2243-103

Printed in Germany

© PFAFF Industriesysteme und Maschinen AG 2009, PFAFF is the exclusive trademark of VSM Group AB.PFAFF Industriesysteme und Maschinen AG is an authorized licensee of the PFAFF trademark.