PFAFF® Industrial

2481-980/30 plusline

INSTRUCTION MANUAL

This instruction manual applies to machines from the following serial numbers **2 216 531** and software version **0307/001** onwards:

296-12-18 760/002
Betriebsanleitung engl. 03.10



This Instruction Manual is valid for all models and subclasses listed in the chapter "Specifications ".

The reprinting, copying or translation of PFAFF Instruction Manuals, whether in whole or in part, is only permitted with our previous authorization and with written reference to the source.

PFAFF Industriesysteme
und Maschinen AG

Hans-Geiger-Str. 12 - IG Nord
D-67661 Kaiserslautern

Contents ..... Chapter – Page

1	**Safety**	**1 - 1**
1.01	Directives	1 - 1
1.02	General notes on safety	1 - 1
1.03	Safety symbols	1 - 2
1.04	Important points for the user	1 - 2
1.05	Operating and specialist personnel	1 - 3
1.05.01	Operating personnel	1 - 3
1.05.02	Specialist personnel	1 - 3
1.06	Danger	1 - 4
2	**Proper use**	**2 - 1**
3	**Specifications**	**3 - 1**
3.01	PFAFF 2481-980/30	3 - 1
3.02	Work aids for the various models	3 - 2
4	**Disposal of Machine**	**4 - 1**
5	**Transport, packaging and storage**	**5 - 1**
5.01	Transportation to customer's premises	5 - 1
5.02	Transport within the customer's premises	5 - 1
5.03	Disposal of the packaging	5 - 1
5.04	Storage	5 - 1
6	**Explanation of the symbols**	**6 - 1**
7	**Control elements**	**7 - 1**
7.01	On/off switch	7 - 1
7.02	Keys on machine head	7 - 1
7.03	Pedal	7 - 2
7.04	Lever for lifting the presser foot	7 - 2
7.05	Knee switch	7 - 3
7.06	Control panel	7 - 4
8	**Mounting and commissioning the machine**	**8 - 1**
8.01	Mounting	8 - 1
8.01.01	Adjusting the table-top height	8 - 1
8.01.02	Connecting the plug-in connections and earth cables	8 - 2
8.01.03	Mounting the spool holder	8 - 3
8.01.04	Mounting the start inhibitor	8 - 3
8.02	Commissioning	8 - 4
8.03	Switching the machine on/off	8 - 4
8.04	Checking the function of the start inhibitor	8 - 4
8.05	Table top cutout	8 - 5

Contents

Contents ..... Chapter – Page

9	**Preparation**	**9 - 1**
9.01	Inserting the needle	9 - 1
9.02	Winding the bobbin thread, adjusting the thread tension	9 - 2
9.03	Removing/Inserting the bobbin case	9 - 3
9.04	Inserting the bobbin case / Adjusting the bobbin thread tension	9 - 3
9.05	Threading the needle thread / Adjusting the needle thread tension	9 - 4
9.06	Entering the stitch length	9 - 5
9.07	Entering the edge guide position	9 - 6
9.08	Entering the start and end backtacks	9 - 7
9.09	Entering the number of compensating stitches	9 - 8
9.10	Setting the number of remaining stitches for the bobbin thread control	9 - 9
9.11	Selecting the seam program	9 - 11
9.12	Adjusting the control panel	9 - 12
10	**Sewing**	**10 - 1**
10.01	Manual sewing	10 - 1
10.02	Programmed sewing	10 - 3
10.03	Error messages	10 - 4
11	**Input**	**11 - 1**
11.01	Input mode	11 - 1
11.02	Entering the seam program	11 - 2
11.02.01	Selecting the seam types	11 - 4
11.02.02	Entering the seam depth	11 - 6
11.03	Example of how to enter a seam program	11 - 8
12	**Care and Maintenance**	**12 - 1**
12.01	Cleaning the machine	12 - 1
12.02	Topping up the oil tank	12 - 2
13	**Adjustment**	**13 - 1**
13.01	Notes on adjustment	13 - 1
13.02	Tools, gauges and other accessories for adjusting	13 - 1
13.03	Abbreviations	13 - 1
13.04	Control and adjustment aids	13 - 2
13.05	Adjusting the basic machine	13 - 3
13.05.01	Basic position of the machine drive unit	13 - 3
13.05.02	Preadjusting the needle height	13 - 4
13.05.03	Neutral position of the bottom feed dog	13 - 5
13.05.04	Zero position of the needle feed	13 - 6
13.05.05	Feeding motion of the bottom feed dog	13 - 7
13.05.06	Feeding motion of the needle feed	13 - 8
13.05.07	Lifting stroke of the bottom feed dog	13 - 9
13.05.08	Height of the bottom feed dog / Position in the needle plate cutout	13 - 10

Contents ..... Chapter – Page

13.05.09 Needle in needle hole centre ..... 13 - 11
13.05.10 Hook shaft bearing and toothed belt tension ..... 13 - 12
13.05.11 Hook lubrication ..... 13 - 13
13.05.12 Needle rise, hook-to-needle clearance, needle height and bobbin case position finger ..... 13 - 14
13.05.13 Thread check spring and slack thread regulator ..... 13 - 16
13.05.14 Presser foot clearance ..... 13 - 17
13.05.15 Setting the zero point of the feed regulator ..... 13 - 18
13.05.16 Stitch length adjustment forwards and in reverse ..... 13 - 19
13.05.17 Bobbin winder ..... 13 - 20
13.05.18 Mechanical limiting of the stitch length ..... 13 - 21
13.05.19 Presser foot pressure ..... 13 - 22

13.06 Adjusting the thread trimming device -900/24 ..... 13 - 23
13.06.01 Adjusting the solenoid / preliminary adjustment of the control cam ..... 13 - 23
13.06.02 Lateral alignment of the thread catcher ..... 13 - 24
13.06.03 Knife position ..... 13 - 25
13.06.04 Front point of reversal of the thread catcher ..... 13 - 26
13.06.05 Manual trimming check ..... 13 - 27
13.06.06 Needle thread tension release ..... 13 - 28
13.06.07 Readjusting the control cam ..... 13 - 29

13.07 Aligning the light transmitter ..... 13 - 30
13.08 Adjustment of the transmitted light sensors ..... 13 - 31
13.09 Function control of the bobbin thread monitor ..... 13 - 32
13.10 Adjusting the electric edge guide ..... 13 - 33

13.11 Parameter settings ..... 13 - 34
13.11.01 Example of a parameter input ..... 13 - 34
13.11.02 Selecting the user level ..... 13 - 35
13.11.03 List of parameters ..... 13 - 36

13.12 Explanation of the error messages ..... 13 - 42
13.13 Service menu ..... 13 - 44
13.14 Internet update of the machine software ..... 13 - 48

14 Wearing parts ..... 14 - 1

15 Circuit diagrams ..... 15 - 1

1 Safety

1.01 Directives

This machine is constructed in accordance with the European regulations contained in the conformity and manufacturer's declarations.
In addition to this Instruction Manual, also observe all generally accepted, statutory and other regulations and legal requirements and all valid environmental protection regulations!
The regionally valid regulations of the social insurance society for occupational accidents or other supervisory organizations are to be strictly adhered to!

1.02 General notes on safety

- This machine may only be operated by adequately trained operators and only after having completely read and understood the Instruction Manual!
- All Notes on Safety and Instruction Manuals of the motor manufacturer are to be read before operating the machine!
- The danger and safety instructions on the machine itself are to be followed!
- This machine may only be used for the purpose for which it is intended and may not be operated without its safety devices. All safety regulations relevant to its operation are to be adhered to.
- When exchanging sewing tools (e.g. needle, roller presser, needle plate and bobbin), when threading the machine, when leaving the machine unattended and during maintenance work, the machine is to be separated from the power supply by switching off the On/Off switch or by removing the plug from the mains!
- Everyday maintenance work is only to be carried out by appropriately trained personnel!
- Repairs and special maintenance work may only be carried out by qualified service staff or appropriately trained personnel!
- Work on electrical equipment may only be carried out by appropriately trained personnel!
- Work is not permitted on parts and equipment which are connected to the power supply! The only exceptions to this rule are found in the regulations EN 50110.
- Modifications and alterations to the machine may only be carried out under observance of all the relevant safety regulations!

- Only spare parts which have been approved by us are to be used for repairs! We expressly point out that any replacement parts or accessories which are not supplied by us have not been tested and approved by us. The installation and/or use of any such products can lead to negative changes in the structural characteristics of the machine. We are not liable for any damage which may be caused by non-original parts.

1.03 Safety symbols



Danger!
Special points to observe.



Danger of injury to operating or technical staff!



Electric voltage!
Danger to operating or technical staff!



Caution

Do not operate without finger guard and safety devices. Before threading, changing bobbin and needle, cleaning etc. **switch off main switch.**

1.04 Important points for the user

- This Instruction Manual is an integral part of the machine and must be available to the operating personnel at all times.
- The Instruction Manual must be read before operating the machine for the first time.
- The operating and specialist personnel is to be instructed as to the safety equipment of the machine and regarding safe work methods.
- It is the duty of the user to only operate the machine in perfect running order.
- It is the obligation of the user to ensure that none of the safety mechanisms are removed or deactivated.
- It is the obligation of the user to ensure that only authorized persons operate and work on the machine.

Further information can be obtained from your PFAFF agent.

1.05 Operating and specialist personnel

1.05.01 Operating personnel

Operating personnel are persons responsible for the equipping, operating and cleaning of the machine as well as for taking care of problems arising in the sewing area.

The operating personnel is required to observe the following points and must:

- always observe the Notes on Safety in the Instruction Manual!
- never use any working methods which could adversely affect the safety of the machine!
- not wear loose-fitting clothing or jewelery such as chains or rings!
- also ensure that only authorized persons have access to the potentially dangerous area around the machine!
- always immediately report to the person responsible any changes in the machine which may limit its safety!

1.05.02 Specialist personnel

Specialist personnel are persons with a specialist education in the fields of electrics, electronics and mechanics. They are responsible for the lubrication, maintenance, repair and adjustment of the machine.
The specialist personnel is obliged to observe the following points and must:

- always observe the Notes on Safety in the Instruction Manual!
- switch off the On/Off switch before carrying out adjustments or repairs, and ensure that it cannot be switched on again unintentionally!
- wait until the luminous diode on the control box is no longer blinking or on before beginning adjustment or repair work.
- never work on parts which are still connected to the power supply! Exceptions are explained in the regulations EN 50110.
- replace the protective coverings and close the electrical control box afer all repairs or maintenance work!

1.06 Danger

A working area of **1 meter** is to be kept free both in front of and behind the machine while it is in operation so that it is always easily accessible.

Never reach into the sewing area while sewing!
Danger of injury by the needle!

Never leave objects on the table while adjusting the machine settings! Objects can become trapped or be slung away! Danger of injury!

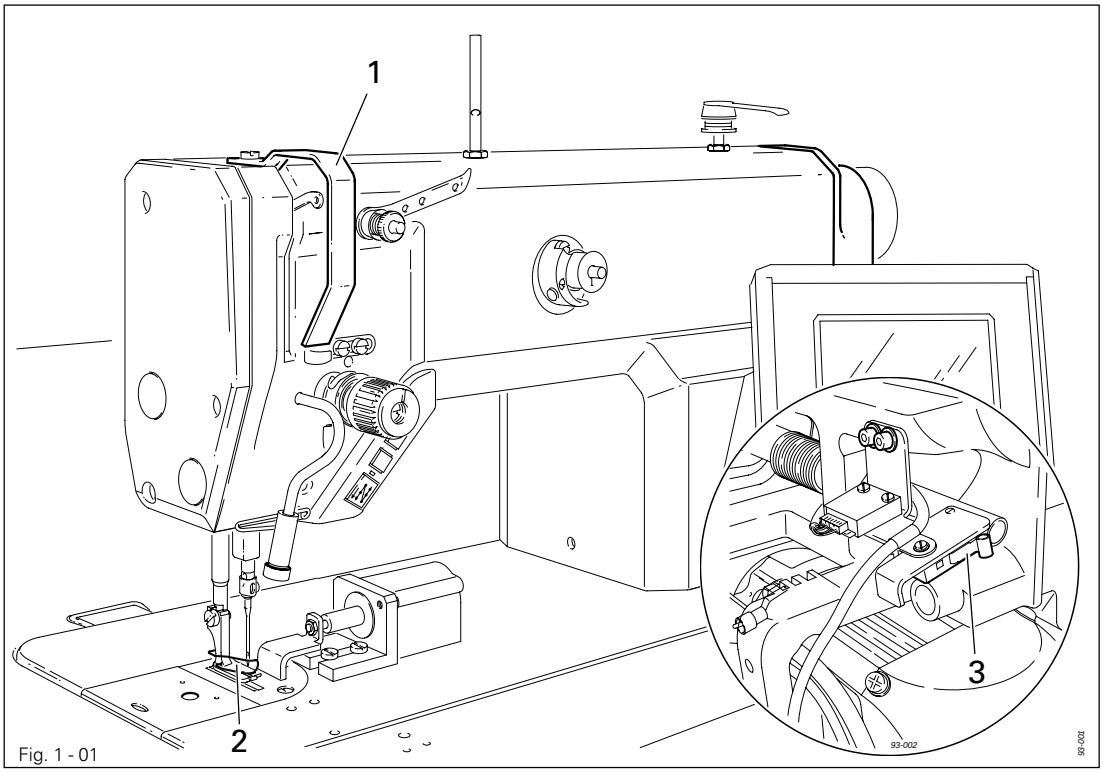

Fig. 1 - 01

Do not operate the machine without its take-up lever guard **1**!
Danger of injury due to the motion of the take-up lever!

Do not operate the machine without the finger guard **2**!
Danger of injury by the needle!

Do not start the machine without start inhibitor **3**!
Danger of injury if the machine is started accidentally!

2 Proper use

The PFAFF 2481-980/30 is an ultra high-speed, single-needle sewing machine with compound feed, a seam-program controlled edge guide and edge sensor.

The machines are used in industry for sewing lockstitch seams.



Any and all uses of this machine which have not been approved of by the manufacturer are considered to be inappropriate! The manufacturer cannot be held liable for any damage caused by the inappropriate use of the machine! The appropriate use of the machine includes the observance of all operational, adjustment, maintenance and repair measures required by the manufacturer!

3 Specifications *

3.01 PFAFF 2481-980/30

Stitch type: ..... 301 (lockstitch)
Needle system: ..... 134 KK

Needle size in 1/100 mm: .....
Model A: ..... 60 - 70
Model B: ..... 80 - 100

Handwheel eff. dia.: ..... 65 mm
Presser foot clearance: ..... 9 - 13 mm
Clearance width: ..... 260 mm
Clearance height: ..... 125 mm

Bed plate dimensions: ..... 476 x 177 mm

Sewing head dimensions:
Length: ..... approx. 550 mm
Width: ..... approx. 180 mm
Height (above table): ..... approx. 300 mm

Max. stitch length: ..... 3.5 mm

Max. speed:
with 30 mm needle bar stroke: ..... 4500 s.p.m. ▲
with 36 mm needle bar stroke: ..... 3800 s.p.m. ▲

Needle bar stroke: ..... 30 or 36 mm

Connection data:
Operating voltage: ..... 230 V ± 10%, 50/60 Hz
Max. power consumption: ..... 400 VA
Fuse protection: ..... 1 x 16 A, inert
Leakage current ..... ≤ 5 mA◆

Ambient temperature
85% rel. humidity (condensation not permitted):: ..... 5 - 40° C

Noise data:
Noise emission level at workplace with a sewing speed of 3200 spm: ..... L_{pA} < 81 dB(A) ■
(Noise measurement in accordance with DIN 45 635-48-A-1, ISO 11204, ISO 3744, ISO 4871)

Net weight of sewing head: ..... approx. 30 kg
Gross weight of sewing head: ..... approx. 38 kg

* Subject to alterations

◆ Due to the use of network filters there is a nominal leakage current of ≤ 5 mA.

▲ Depending on the stitch length, the max. speed is reduced automatically within the max. preset value.

■ K_{pA} = 2.5 dB

3.02 Work aids for the various models

Model A: ..... for sewing with fine materials
Model B: ..... for sewing medium-weight materials

Work aids:
Sub-class -909/04 ..... Thread wiping device

4 Disposal of machine

- The proper disposal of the machine is the responsibility of the customer.
- The materials used in the machines are steel, aluminium, brass and various plastics. The electrical equipment consists of plastics and copper.
- The machine is to be disposed of in accordance with the locally valid environmental protection regulations. If necessary, a specialist is to be commissioned.



Special care is to be taken that parts soiled with lubricants are separately disposed of in accordance with the locally valid pollution control regulations!

5 Transport, packaging and storage

5.01 Transportation to customer's premises

The machines are delivered completely packed.

5.02 Transport within the customer’s premises

The manufacturer bears no liability for transport within the customer’s premises or to the individual locations of use. Make sure that the machines are always transported upright.

5.03 Disposal of the packaging

The packaging of these machines consists of paper, cardboard and VCE fiber. The proper disposal of the packaging is the responsibility of the customer.

5.04 Storage

The machine can be stored for up to 6 months if not in use. During this time it should be protected from dust and moisture.
For longer storage the individual parts of the machine, especially the moving parts, must be protected from corrosion, e.g. by a film of oil.

6 Explanation of the symbols

In the following section of this Instruction Manual, certain tasks or important pieces of information are accentuated by symbols.
The symbols used have the following meanings:



Note, information



Cleaning, care



Lubrication, greasing

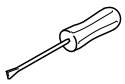

Servicing, repairing, adjustment, maintenance
(only to be carried out by specialist personnel)

7 Control elements

7.01 On/off switch

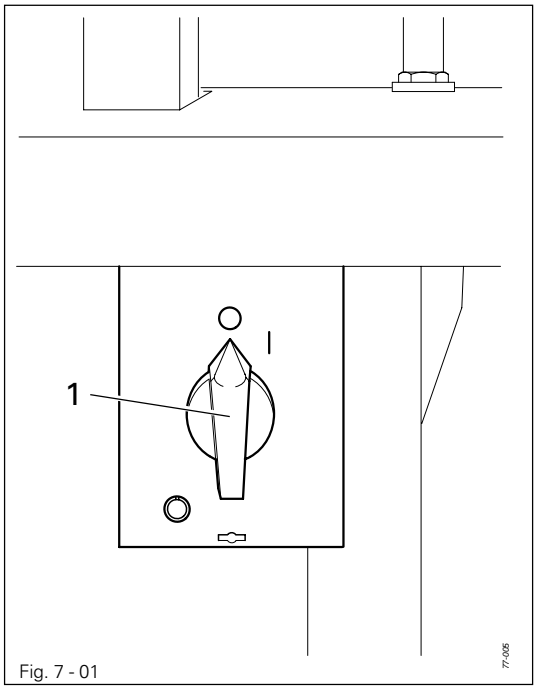

Fig. 7 - 01

Before switching on the machine, raise the take-up lever as far as possible.

- The machine can be switched on or off by turning the on/off switch **1**.

7.02 Keys on machine head

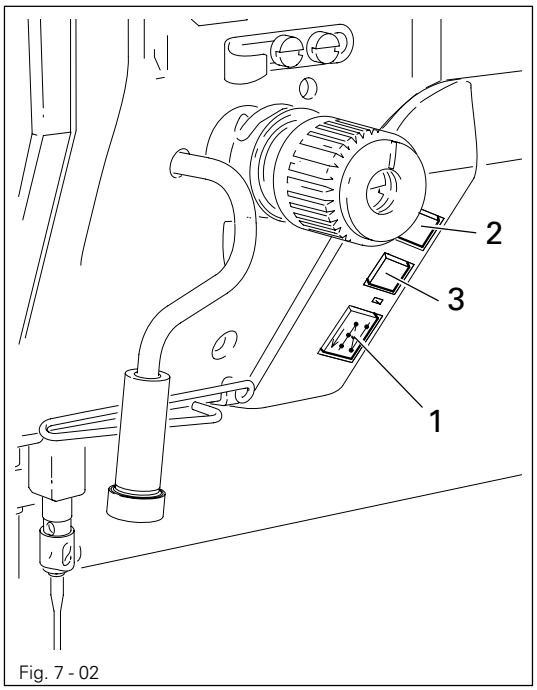

Fig. 7 - 02

- By operating the respective keys, the following functions are carried out:

  Key **1**: Reverse sewing

  Key **2**: Raise the needle, without thread trimming

  Key **3**: Carry out a single stitch

7.03 Pedal

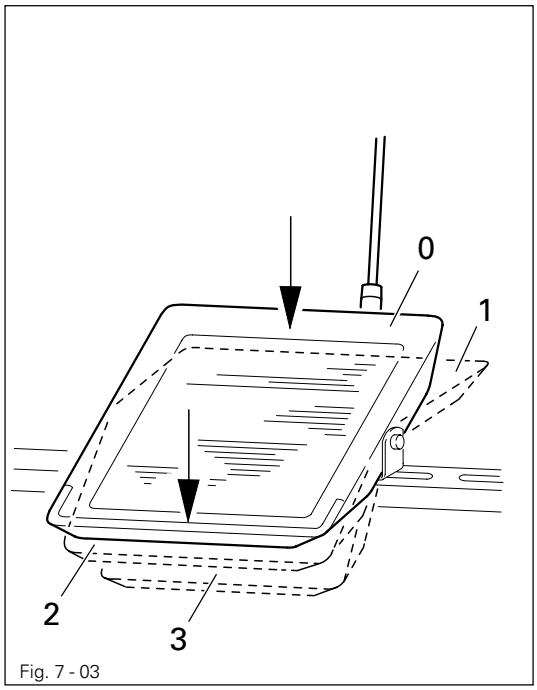

Fig. 7 - 03

0 = Neutral position

1 = Sewing

2 = Raise presser foot

3 = Cut thread / reset bobbin thread monitor or bobbin rest thread count function

7.04 Lever for lifting the presser foot

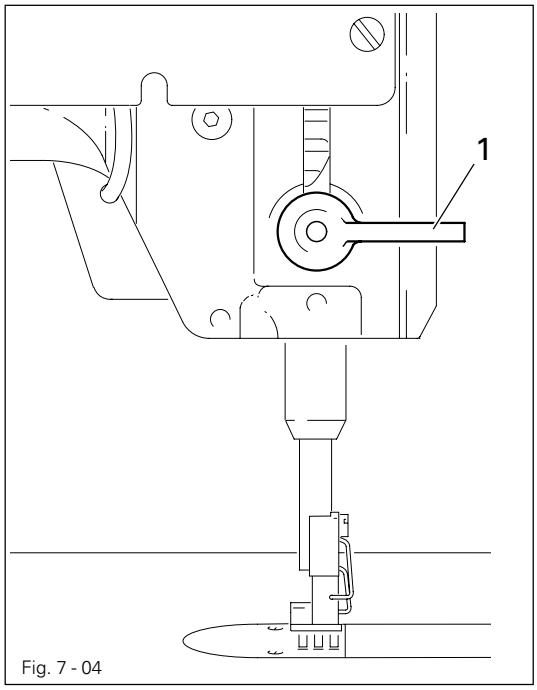

Fig. 7 - 04

- The presser foot is raised by turning lever **1**.

7.05 Knee switch

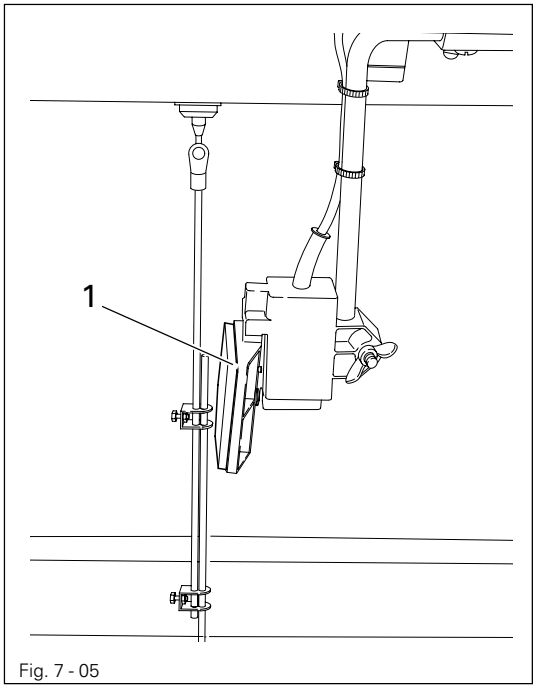

Fig. 7 - 05

- When the knee switch **1** is operated, one stitch is sewn with a reduced stitch length.

The value for the reduced stitch length is set with parameter "835", see **Chapter 13.11 Parameter settings.**

7.06 Control panel

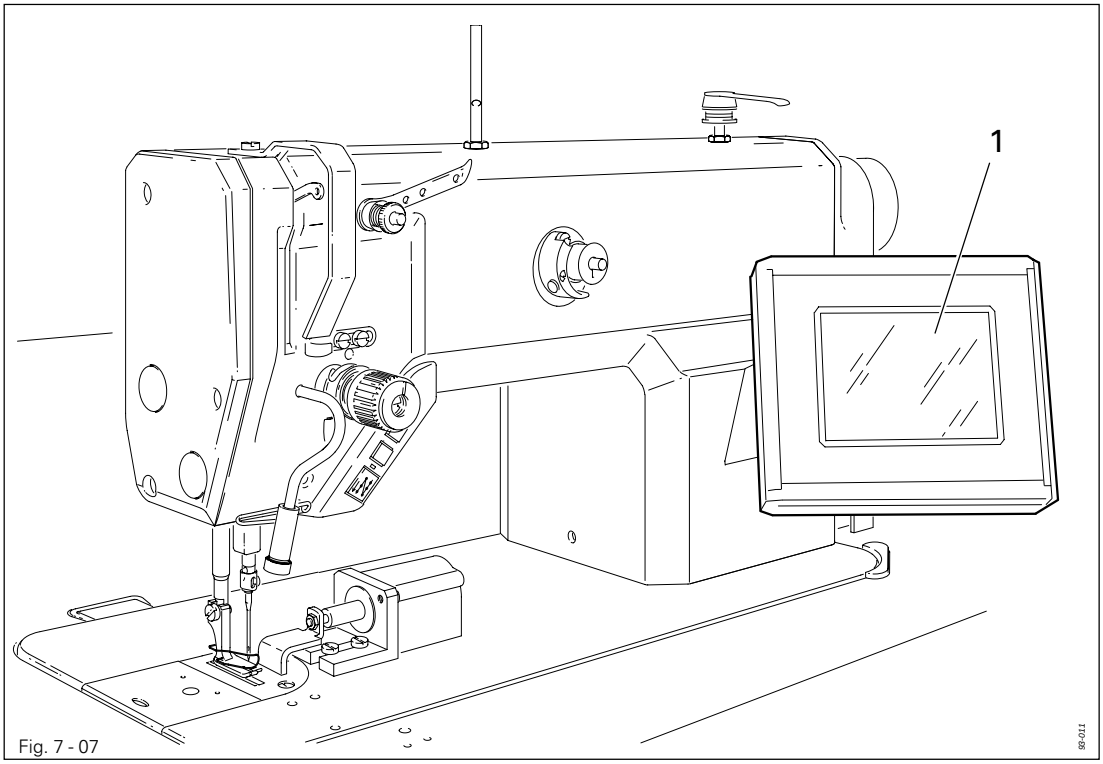

Fig. 7 - 07

The current operating conditions are displayed on control panel **1**. Operation takes place in a constant dialogue between the control unit and the operator. For this purpose, depending on the operating condition of the machine, different symbols and/or texts are displayed. If the symbols or texts are framed, these show functions which can be selected by pressing the appropriate position on the monitor. By pressing the corresponding function this is carried out or switched on or off immediately, or a further menu appears, e.g. for entering a value. Activated functions are shown with inverted symbols. Unframed symbols or texts are only used for display purposes and cannot be selected by pressing.

Description of the functions



Normal symbol = function switched off (inactive)



Inverted symbol = function switched on (active)

8 Mounting and commissioning the machine

The machine must only be mounted and commissioned by qualified personnel! All relevant safety regulations are to be observed!

If the machine is delivered without a table, be sure that the frame and the table top which you intend to use can hold the weight of the machine and the motor. It must be ensured that the supporting structure is sufficiently sturdy, even during sewing operations.

8.01 Mounting

The necessary electricity supply must be available at the machine's location. Also, a stable and horizontal surface as well as adequate lighting are required at the location.

Depending on the type of table, the method of packaging used may require that the table top be lowered for transport. The following is a description of how to adjust the height of the table top.

8.01.01 Adjusting the table-top height

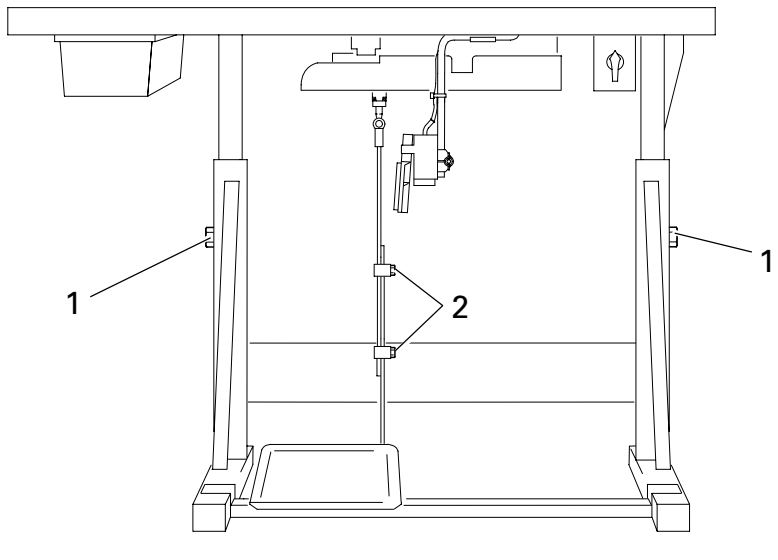

Fig. 8 - 01

- Loosen screws **1** and **2** and set the desired table-top height
- Tighten screws **1** well.
- Adjust the pedal to the desired position and tighten screw **2**.

8.01.02 Connecting the plug-in connections and earth cables

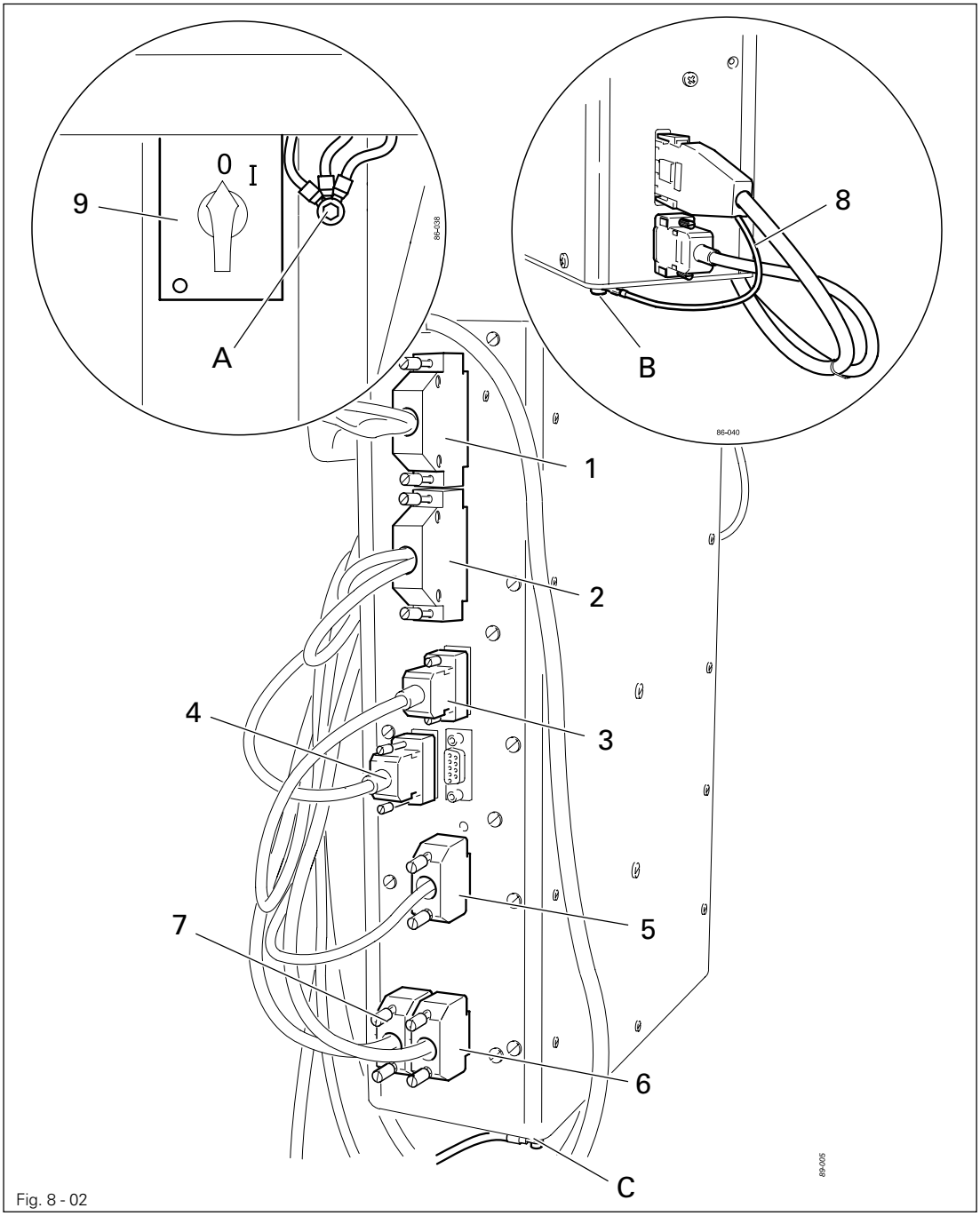

Fig. 8 - 02

- Connect plugs 1- 7 as labelled to the control box.
- Screw the earth cable from the sewing head to earth point A.
- Fasten the earth cable 8 from the motor to earth point B.
- Connect earth point C to earth point A with an earth cable.
- Screw the earth cable from main switch 9 to earth point A.

8.01.03 Mounting the spool holder

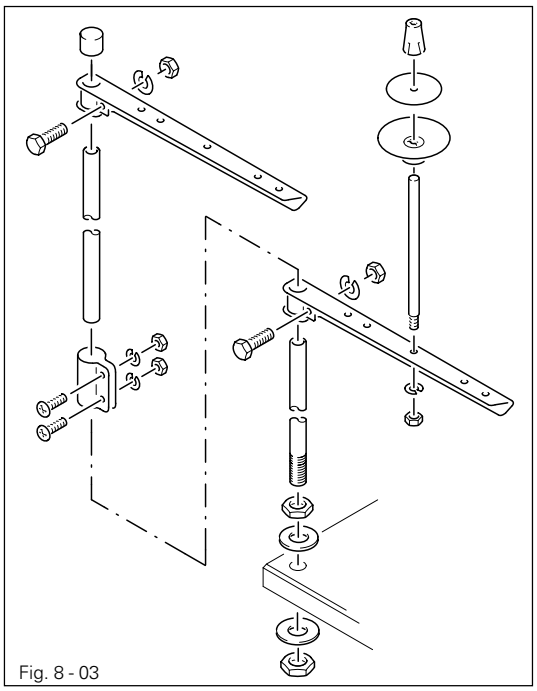

Fig. 8 - 03

- Mount the spool holder as shown in **Fig. 8-03**.
- Insert the spool holder into the hole in the table top and fasten it with the nuts enclosed.

8.01.04 Mounting the start inhibitor

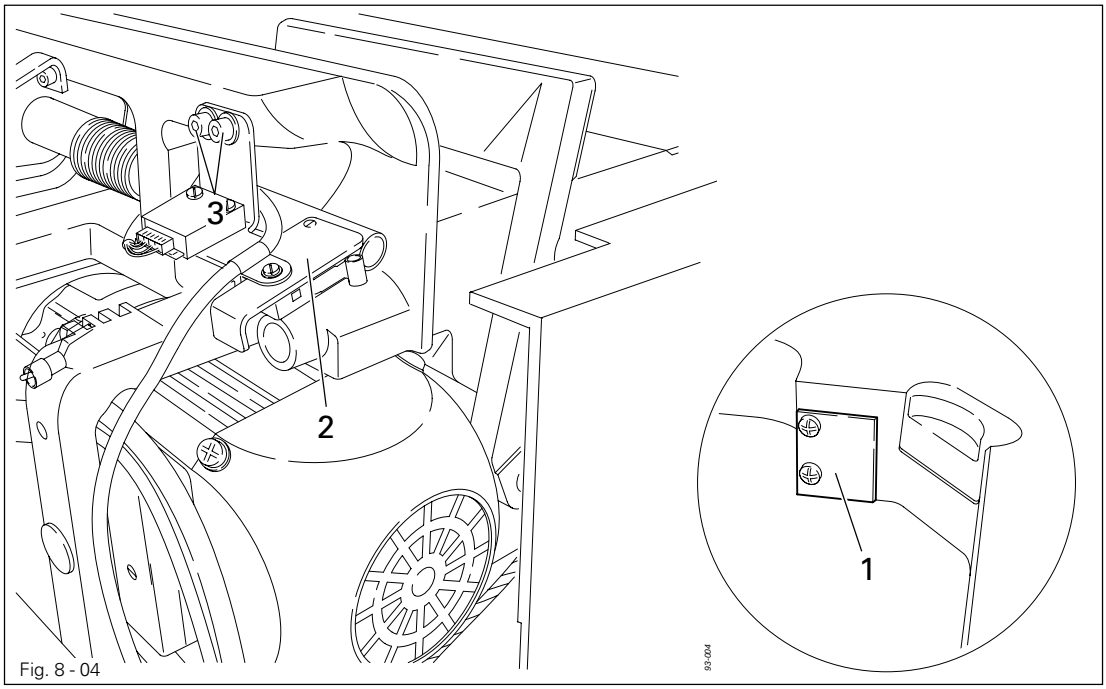

Fig. 8 - 04

- For machines delivered without a table, the plate **1** from the accessories should be mounted, so that it is on a level with the bottom edge of the table top and with the left edge of the table top cutout.
- Set the machine into the table top.
- After loosening screws **3**, set switch **2** so that it is activated when the sewing head is in an upright position.
- In this position tighten screws **3**.

8.02 Commissioning

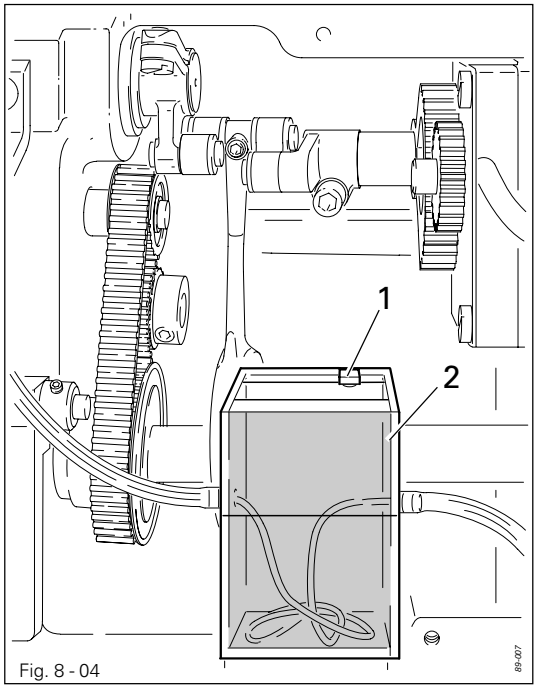

Fig. 8 - 04

- Before commissioning the machine remove plug 1 from the oil tank 2.

Danger of damage to the machine!
Plug 1 serves as a safety device for transportation and should not be used during sewing operations.

- Examine the machine, in particular the electric cables for any damage.
- Clean the machine thoroughly, see also **Chapter 12 Care and Maintenance.**
- Have qualified personnel check whether the machine can be operated with the available voltage and whether it is connected properly. If there are any irregularities do not operate the machine under any circumstances.

8.03 Switching the machine on/off

- Switch the machine on or off (see **Chapter 7.01 On/off switch).**

8.04 Checking the function of the start inhibitor

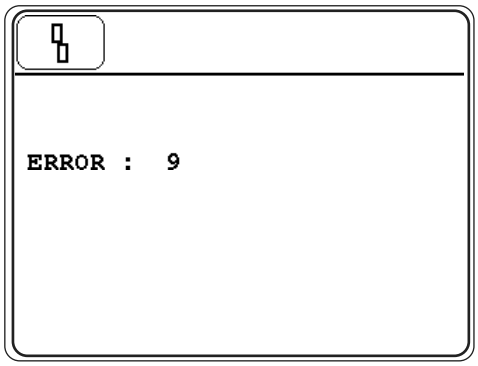

- Switch the machine on at the main switch and tilt it over.
  The error message "ERRO 9" must appear on the control panel.
- If the message does not appear, check the setting of the start inhibitor as described in **Chapter 8.01.04 Mounting the start inhibitor.**
- Set the sewing head upright and acknowledge the error message.
  The machine is ready for operation again.

8.05 Table top cutout

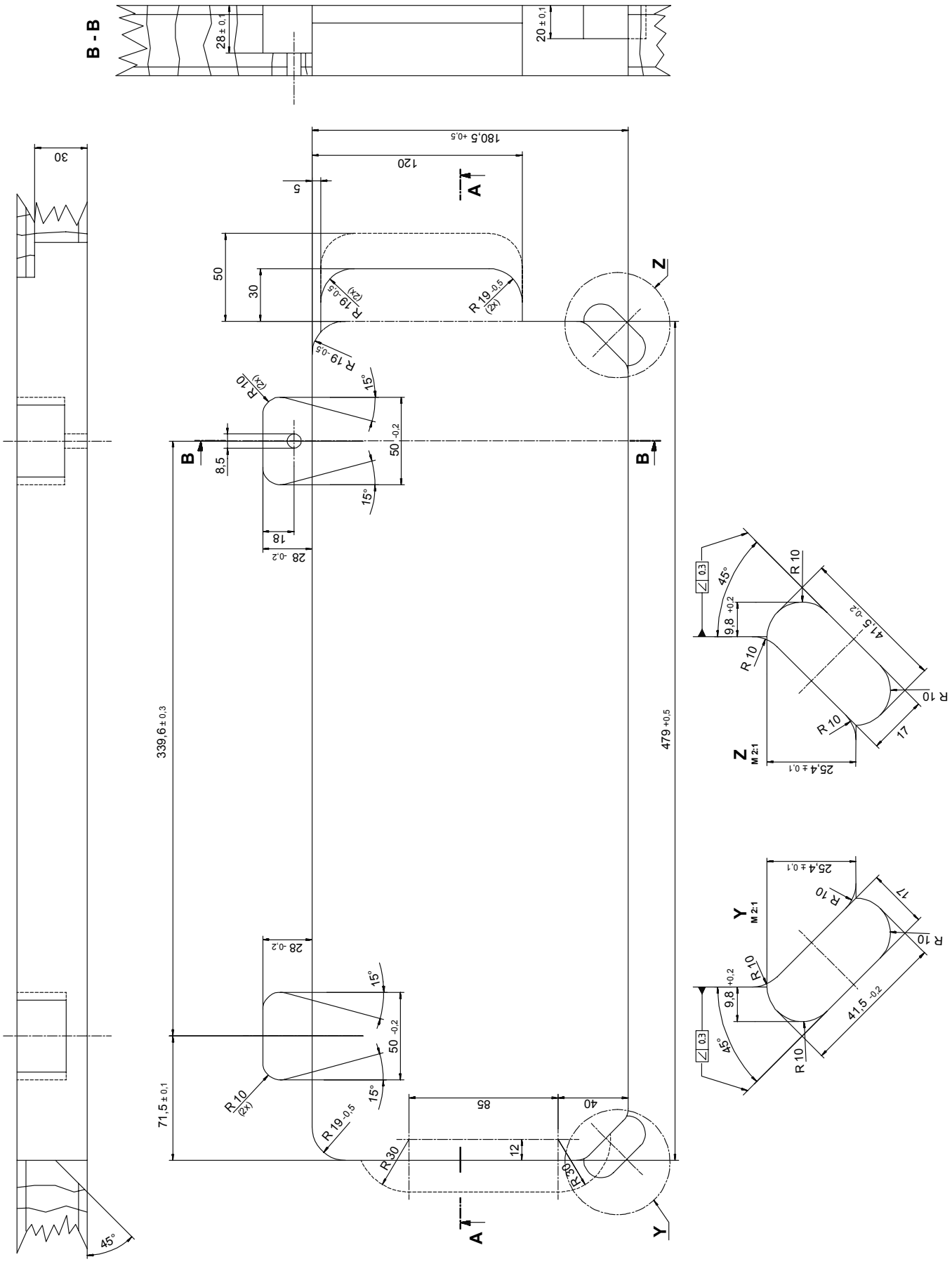

9 Preparation

All regulations and instructions in this Instruction Manual are to be observed! Special attention is to be paid to the safety regulations!

All preparation work is only to be carried out by appropriately trained personnel. Before all preparation work, the machine is to be separated from the electricity supply by removing the plug from the mains or switching off the On/Off switch!

9.01 Inserting the needle

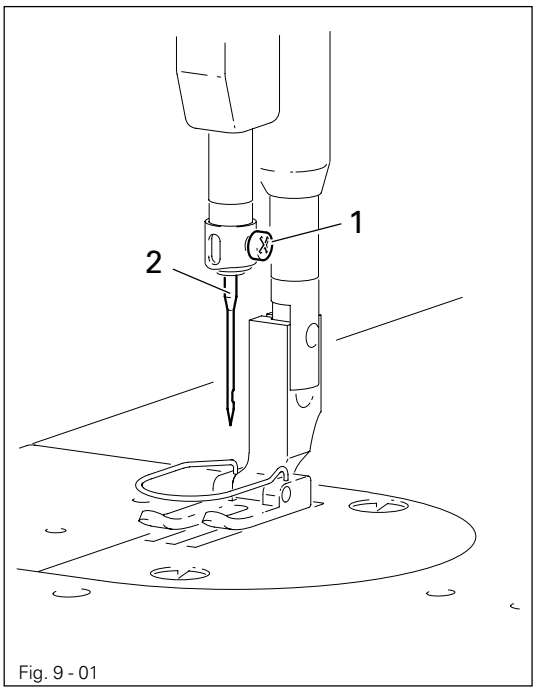

Fig. 9 - 01

Switch off the machine! Danger of injury due to unintentional starting of the machine!

- Raise needle bar.
- Loosen screw **1** and insert needle **2** until you feel it stop.
- Tighten screw **1**.

Use only system **134 KK** needles.

The selection of the correct needle depends on the model of the machine and the material and threads being sewn (**see chapter 3 Specifications**).

9.02 Winding the bobbin thread, adjusting the thread tension

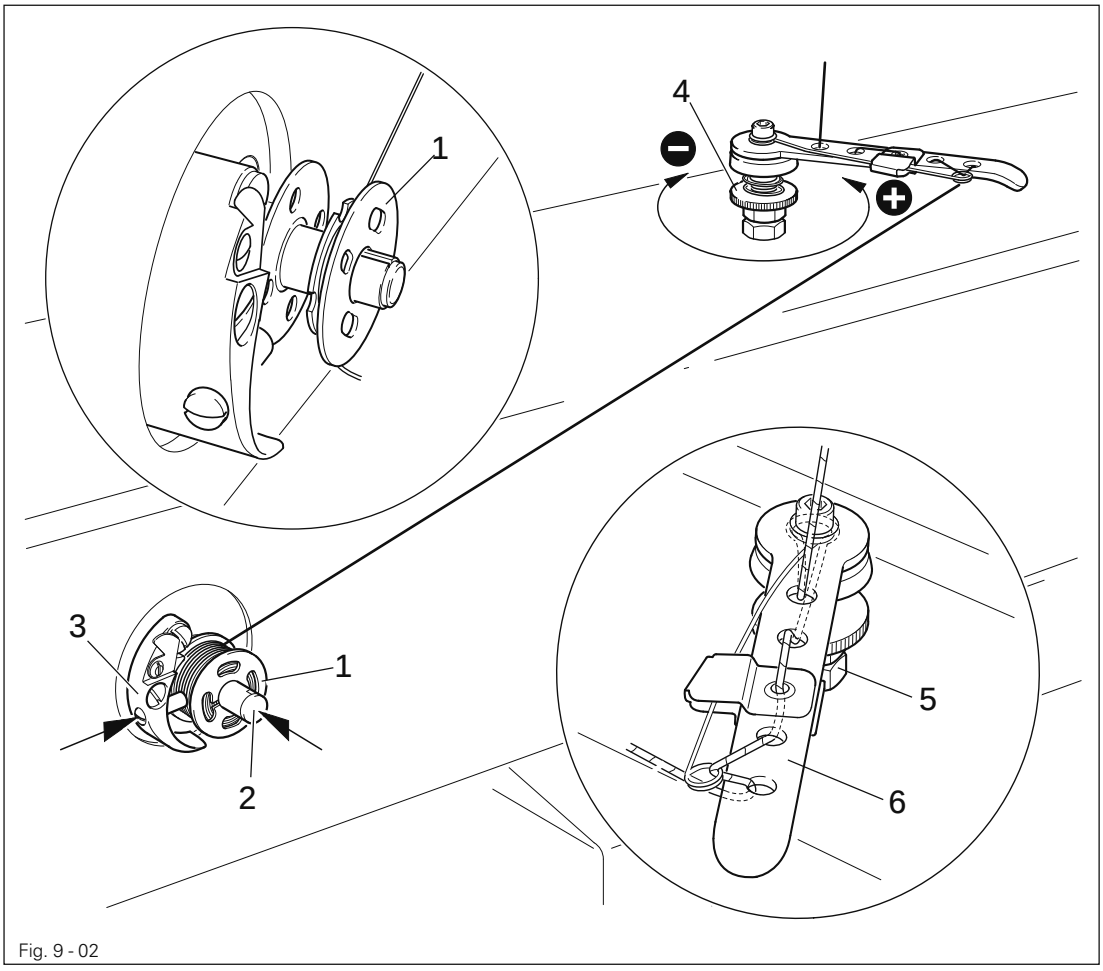

Fig. 9 - 02

- Fit empty bobbin 1 onto bobbin winder spindle 2 with the rest thread chamber on the outside.
- Thread the thread as shown in the above illustration and wind it round the bobbin 1 a few times in an anti-clockwise direction.
- Switch on the bobbin winder by pressing bobbin winder spindle 2 and lever 3 simultaneously.

The bobbin fills up during sewing.

If the machine is only run for bobbin winding (without sewing), a hook base must be fitted in the hook.
Otherwise a jammed thread may damage the hook!

- The tension of the thread on bobbin 1 can be adjusted with knurled screw 4.
- The bobbin winder stops automatically when bobbin 1 is full.

If the thread is wound unevenly:

- Loosen nut 5.
- Turn thread guide 6 accordingly.
- Tighten nut 5..

9.03 Removing/Inserting the bobbin case

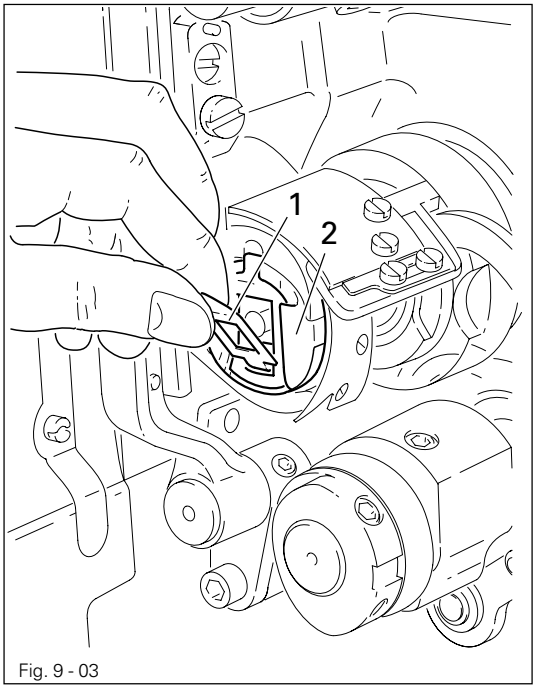

Fig. 9 - 03

Switch off the machine!
Danger of injury due to unintentional starting of the machine!

Removing the bobbin case:

- Tilt back the machine.
- Raise latch **1** and remove bobbin case **2**.

Inserting the bobbin case:

- Press bobbin case **2** until you feel it snap into the bobbin case base.

Return the machine to its upright position using **both** hands!
Danger of injury by crushing between the machine and the table top!

9.04 Inserting the bobbin case / Adjusting the bobbin thread tension

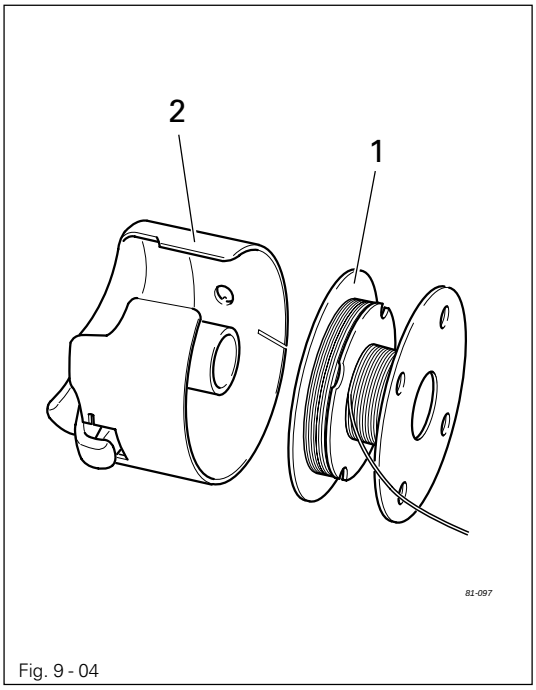

Fig. 9 - 04

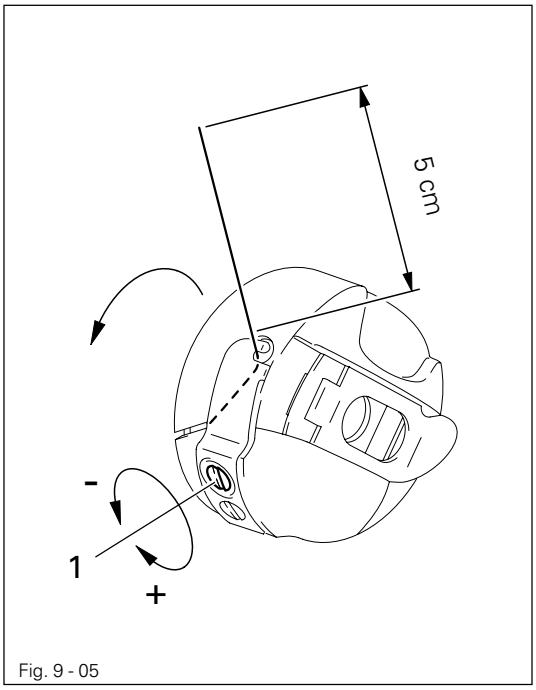

Fig. 9 - 05

- Insert bobbin **1** into the bobbin case **2** as shown in **Fig. 9-04.**
- Place the bobbin in the bobbin case.
- Pass the thread through the slot under the spring as shown in **Fig. 9-05.** When the thread is drawn off, the bobbin must turn in the direction shown by the arrows.
- Adjust the thread tension by turning screw **1.**

9.05 Threading the needle thread / Adjusting the needle thread tension

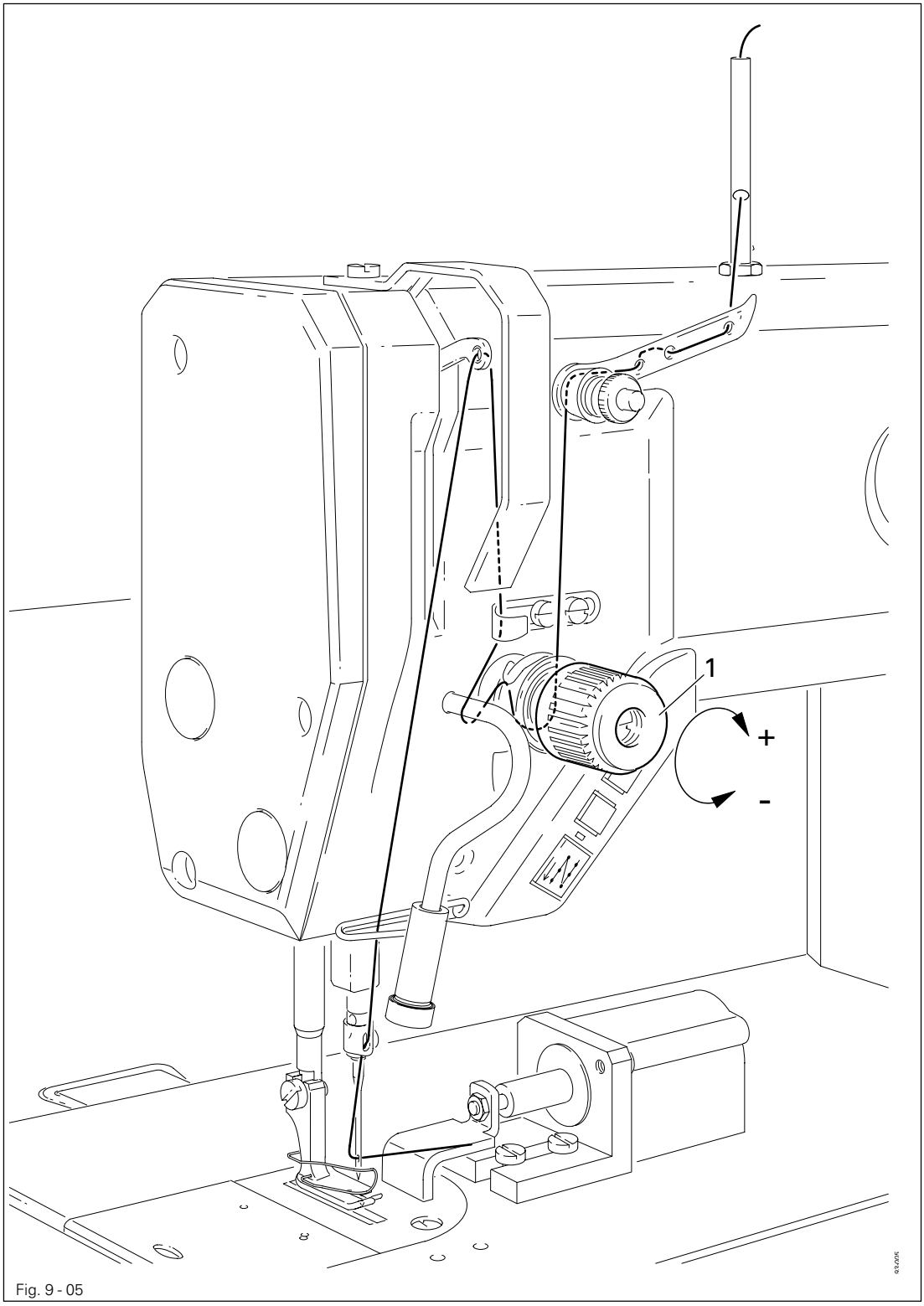

Fig. 9 - 05

Switch off the machine!
Danger of injury due to unintentional starting of the machine!

- Thread the machine as shown in **Fig. 9-05**.
- Adjust the needle thread tension by turning disk **1**.

9.06 Entering the stitch length

In the manual sewing mode the stitch length can be entered or altered directly.

- Switch on the machine.

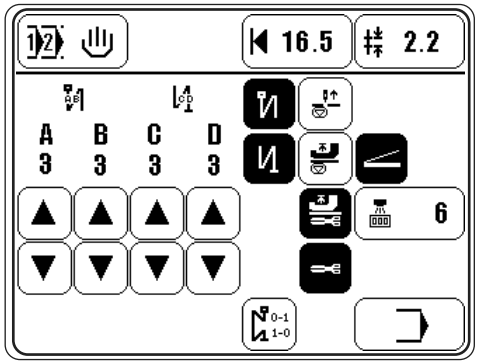

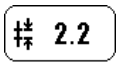

- Call up the stitch length input menu.

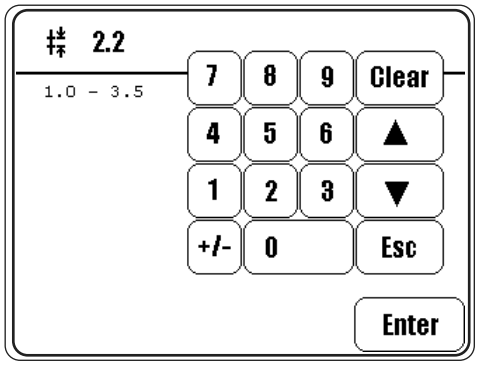

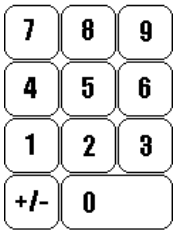

- Enter the stitch length with the number keys.

Or

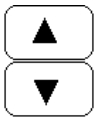

- Alter the stitch length step by step.



- Conclude the input and take over the altered value.



The stitch length value is displayed in mm.

9.07 Entering the edge guide position

In the manual sewing mode the edge guide position can be entered or altered directly.

- Switch on the machine.

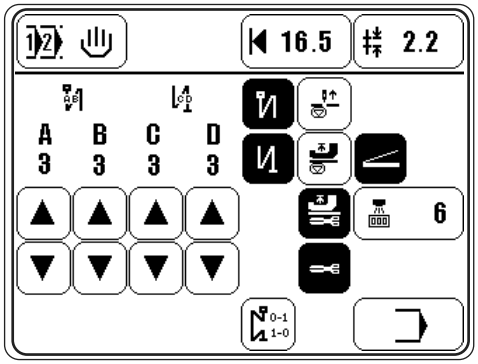

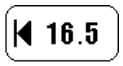

- Call up the edge guide position input menu.

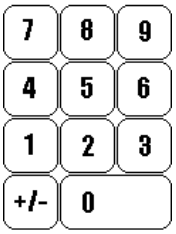

- Enter the edge guide position with the number keys.

Or

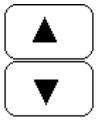

- Alter the edge guide position step by step.



- Conclude the input and take over the altered value.



The edge guide position value is displayed in mm.

9.08 Entering the start and end backtacks

In the manual sewing mode the start and end backtacks can be entered or altered directly.

- Switch on the machine.

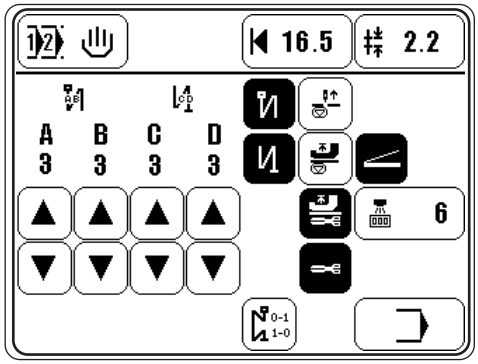



- Switch on **start backtack** and/or **end backtack** (the corresponding symbol is shown as an inverse symbol).

A
3



- Select the desired value for the number of forward stitches (A) of the start backtack.

B
3



- Select the desired value for the number of reverse stitches (B) of the start backtack.

C
3



- Select the desired value for the number of reverse stitches (C) of the end backtack.

D
3



- Select the desired value for the number of forward stitches (D) of the end backtack.

9.09 Entering the number of compensating stitches

In the manual sewing mode it is possible to enter the number of compensating stitches, which will be sewn after the recognition of the material edge till the machine stops.

- Switch on the machine.

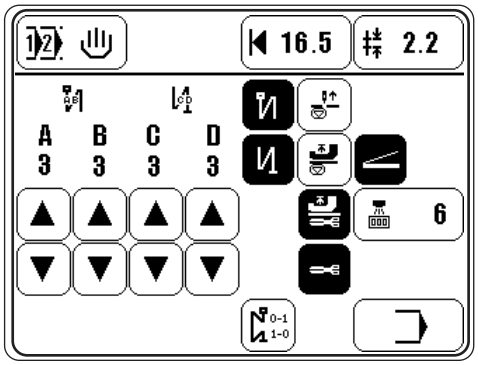



- Switch on the edge sensor and call up the compensating stitches input menu.

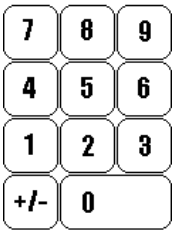

- Enter the number of compensating stitches with the number keys.

Or

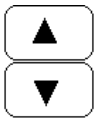

- Enter the number of compensating stitches step by step.



- Conclude the input and take over the altered value.

9.10 Setting the number of remaining stitches for the bobbin thread control

When the bobbin thread monitor signals that the bobbin thread has been used up, there is still an amount of remaining thread on the bobbin.

- Switch on the machine.

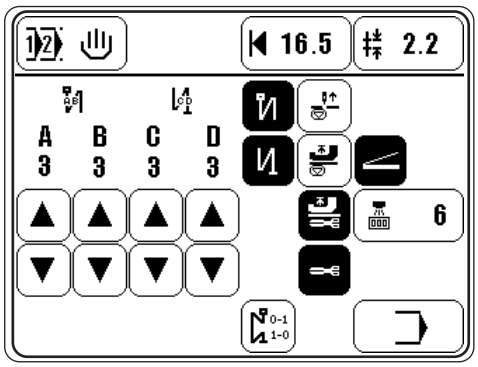

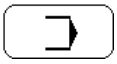

- Call up the input mode.

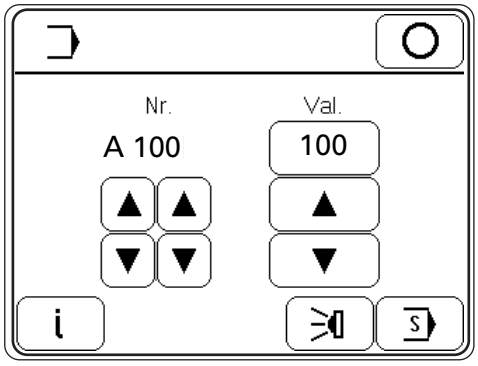

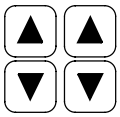

- Call up parameter "660".

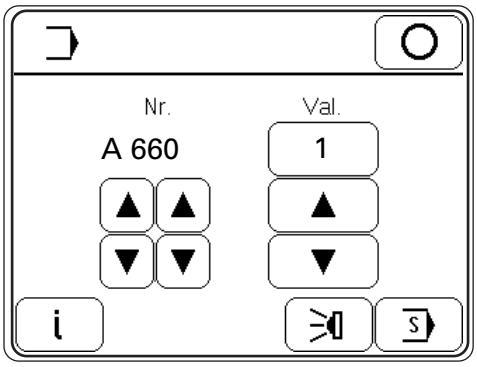

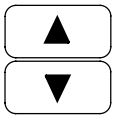

- Switch on the bobbin thread monitoring function (Value "1").



Explanation of the values for parameter "660" (bobbin thread monitoring):

0 = off
1 = remaining thread counter on
2 = bobbin thread reverse counter on

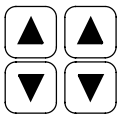

- Call up parameter "760".

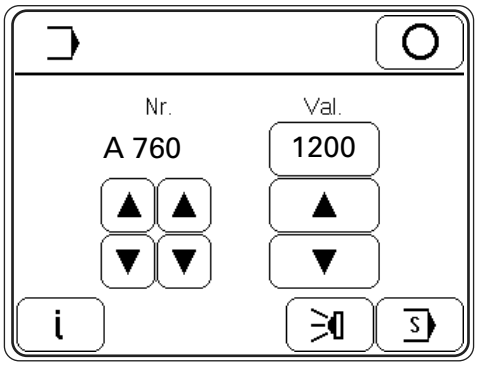

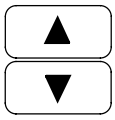

- Set the number of remaining stitches, which can still be sewn after the signal from the bobbin thread monitor (depends on the thread size).



- Conclude the input.



The number of remaining stitches can be altered in 200-steps.

9.11 Selecting the seam program

With the seam program selection function it is possible to select either manual or programmed sewing. The programmed sewing function is called up by selecting a seam program number from 0-65.

- Switch on the machine.

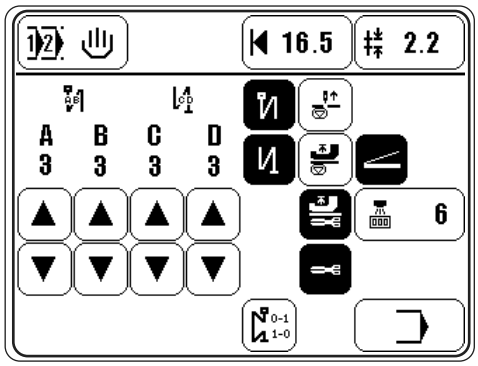

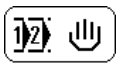

- Call up the seam program selection menu.

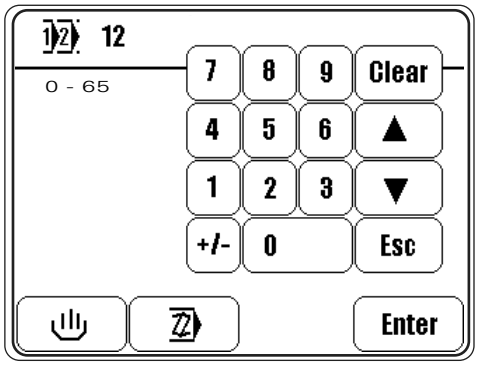

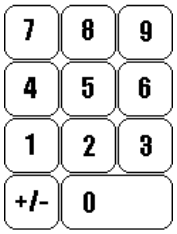

- Enter the seam program number with the number keys.

Or

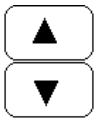

- Scroll through the seam program numbers.



- Conclude the input and change to the programmed sewing mode with the selected seam program number.

Or

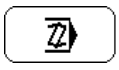

- Take over the selected program number and change into the seam programming function, see **Chapter 11.02 Entering the seam program.**

Or



- Select the manual sewing mode. The program number is not taken over.

9.12 Adjusting the control panel

- Switch on the machine.

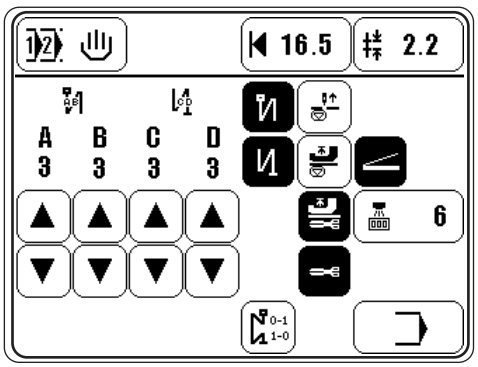

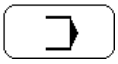

- Call up the input mode.

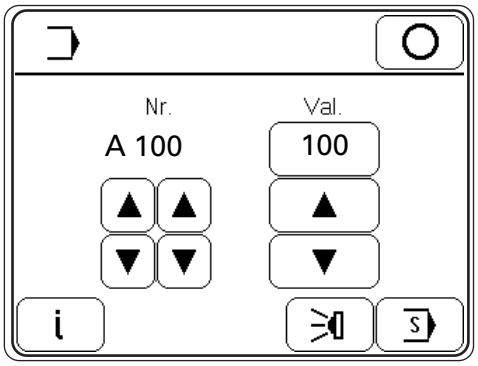

- Select user lever "C", see **Chapter 13.11.02 Selecting the user level.**



- Call up the service menu.

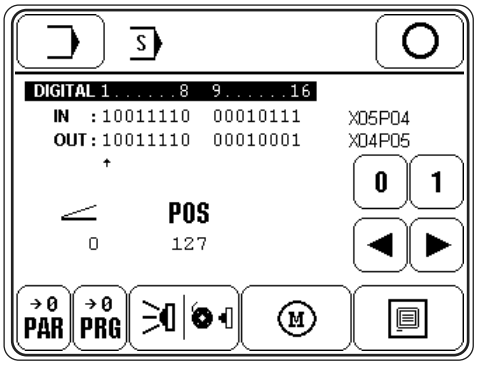



- Call up the control panel functions.

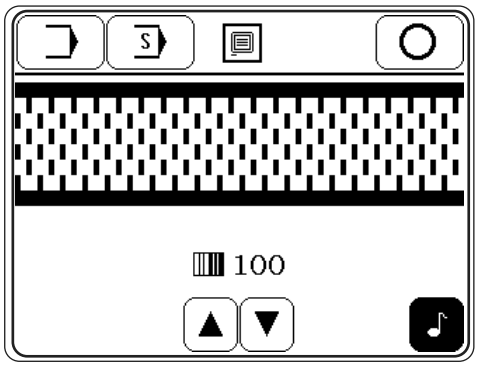

- Change the display contrast.

- Switch the key tone on or off.

Never reduce the display contrast to such an extent, that the display can no longer be read!

10 Sewing

In the sewing mode a difference must be made between manual sewing and programmed sewing. In the manual sewing mode, in addition to the functions such as edge guide, stitch length, seam securing, needle functions, presser foot functions and seam end conditions, the parameter for securing seams are also displayed and can be altered directly. The current seam securing parameters also apply in programmed sewing. The change from programmed to manual sewing and vice versa is effected with the program number selection function.

10.01 Manual sewing

In the manual sewing mode all the parameters necessary for the sewing operation can be changed directly. The manual sewing mode is selected with the program number selection function, see **Chapter 9.11 Selecting the seam program.** The selection of the manual sewing mode is shown by the symbol of a hand on the display instead of the program number.

- Switch on the machine.
- Select the manual sewing mode, see **Chapter 9.11 Selecting the seam program.**

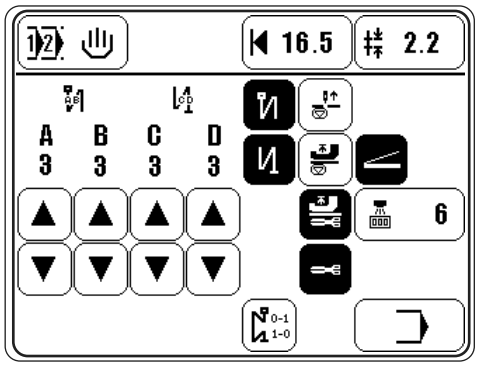

Explanation of the functions



Seam program selection
Opens the seam program number input menu or the menu for selecting manual sewing, see **Chapter 9.11 Selecting the seam program.**

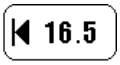

Edge guide position
Opens the menu for entering the seam depth, see **Chapter 9.07 Entering the edge guide position.**

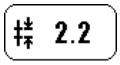

Stitch length
Opens the menu for entering the stitch length, see **Chapter 9.06 Entering the stitch length.**

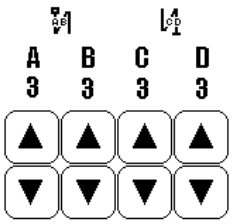

Number of stitches for the start and end backtacks
With the use of this input area the number of stitches for the start and end backtacks are entered, see **Chapter 9.08 Entering the start and end backtacks.**

Start backtacks
Switches the start backtack function on or off.

End backtacks
Switches the end backtack function on or off.

Needle position raised
When this function is activated, the needle is positioned at t.d.c. after sewing stops.

Presser foot raised
When this function is activated, the presser foot is raised after sewing stops.

Seam end with pedal
When this function is activated, the seam end is initialised manually with the pedal.

Seam end with sensor / compensating stitches
Opens the menu for entering the compensating stitches, see **Chapter 9.09 Entering the number of compensating stitches.**
When this function is switched on, the seam end is initialised automatically with the edge sensor.

Presser foot raised after thread trimming
When this function is activated, the presser foot is raised after thread trimming.

Thread trimming
When the function is activated, thread trimming with the pedal function is possible.

Bartack suppression
When operated, the next bartack is suppressed.

Input mode
Calls up the input mode.

If the bobbin thread monitoring function is switched on, the remaining number of stitches is also displayed, and if the speed display function is switched on, the current speed is also displayed, see **Chapter 13.11.03 List of parameters.**

- Sewing is carried out with the pedal functions, see **Chapter 7.03 Pedal.**

10.02 Programmed sewing

In the programmed sewing mode the seam parameters are set in a seam program. The program number selection function is used to call up a seam program. The selected program number, an sketch of the seam with the number of programmed seam sections, the current seam section and the parameters for the current seam section are displayed. The parameters for the current seam section cannot be changed directly.

- Switch on the machine.
- Select a seam program, see **Chapter 9.11 Selecting the seam program.**

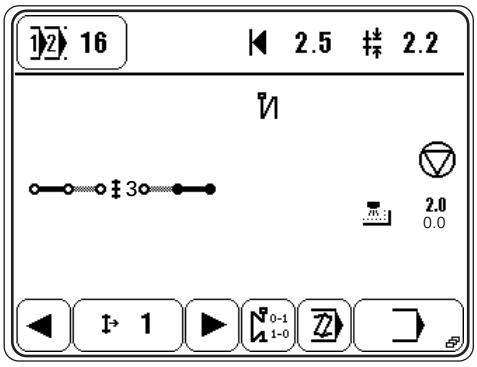

Explanation of the functions and displays



Seam program selection
Opens the menu for entering the seam program number or for selecting the manual sewing mode, see **Chapter 9.11 Selecting the seam program.**



Edge guide postion
Displays the current position of the edge guide.



Stitch length
Displays the current stitch length.



Number of seam sections
Displays the total number of seam sections in the seam program.



Selecting seam sections
This function is used to select the seam sections of the current seam program.

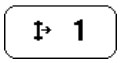

Current seam section
Display and selection of the current seam section using the number keys.



Bartack suppression
When operated, the next bartack is suppressed.



Entering the seam program
Opens the menu for entering and altering seam programs, see **Chapter 11.02 Entering the seam program.**

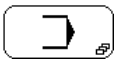

Input mode
Calls up the input mode.



Depending on the seam program, further symbols showing corresponding values or selected functions may appear on the display.



In addition, when the bobbin thread monitoring function is activated, the number of remaining stitches is shown, and when the speed display function is activated the current speed is shown, see **Chapter 13.11.03 List of parameters.**

- Sewing is carried out with the pedal functions, see **Chapter 7.03 Pedal.**

10.03 Error messages

If an error occurs, the text "ERROR" appears on the display, together with an error code. An error message is caused by incorrect settings, defective elements or seam programs and by overload conditions.
For an explanation of the error codes see **Chapter 13.12 Explanation of the error messages.**

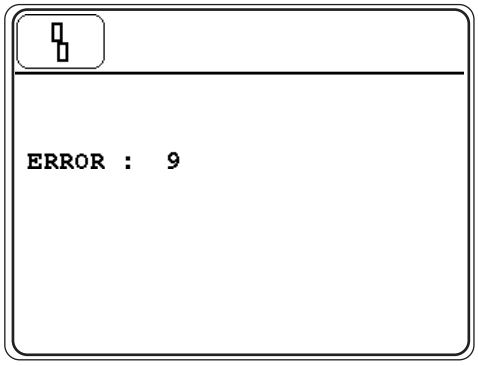

- Eliminate the error.



- Confirm error elimination.

11 Input

This chapter describes the input mode functions and how to enter seam programs.

11.01 Input mode

When the machine is in its initial state, it is possible to enter the parameters and the corresponding values directly in the control unit. The functions information, adjustment of the transmitted light sensors and service can be called up.

- Switch on the machine.

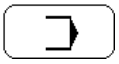

- Call up the input mode.

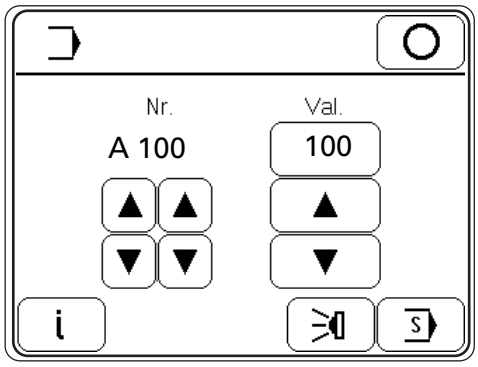

Explanation of the functions



Sewing mode
Quit the input mode and call up the sewing mode.

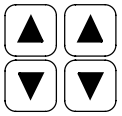

Parameter selection
Select the hundred and unit figures of the desired parameters, see **Chapter 13.11.01 Example of a parameter input.**

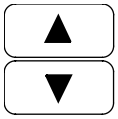

Altering the parameter value
Change the value of the selected parameter, see **Chapter 13.11.01 Example of a parameter input.**



Software information
Calls up information about the current machine software.



Adjusting the transmitted light sensors
Opens the menu for adjusting the transmitted light sensors, see **Chapter 13.08 Adjusting the transmitted light sensors.**



Service
Opens the service menu, see **Chapter 13.13 Service menu.**

11.02 Entering the seam program

Seam programs are created by establishing seam sections which are allocated certain functions and values. It is possible to store up to 65 seam programs each with 15 seam sections. The maximum number of seam sections in each seam program and the maximum number of seam programs can be limited by setting appropriate parameters, see **Chapter 13.11 Parameter settings.**

- Switch on the machine.
- Select a program number, see **Chapter 9.11 Selecting the seam program.**



- Call up the seam program input function.

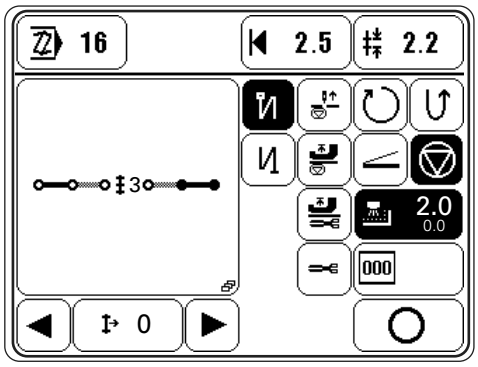

Explanation of the functions



Seam program selection
Opens the menu for entering the seam program number or for selecting the manual sewing mode, see **Chapter 9.11 Selecting the seam program.**

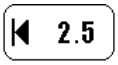

Edge guide
Opens the menu for entering the seam depth, see **Chapter 9.07 Entering the edge guide position.**

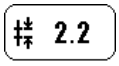

Stitch length
Opens the menu for entering the stitch length, see **Chapter 9.06 Entering the stitch length.**

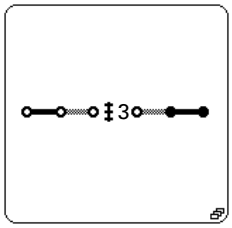

Selecting the seam type
Shows the current seam program with the corresponding seam sections and opens the menu for selecting the seam type, see **Chapter 11.02.01 Selecting the seam type.**



Start backtacks
Switches the start backtack function on or off.



End backtacks
Switches the end backtack function on or off.



Needle position raised
When this function is activated, the needle is positioned at t.d.c. after sewing stops.



Presser foot raised
When this function is activated, the presser foot is raised after sewing stops.



Presser foot raised after thread trimming
When this function is activated, the presser foot is raised after thread trimming.



Thread trimming
When the function is activated, thread trimming with the pedal function is possible.



Speed
Opens the speed input menu.
When this function is activated, it is possible to sew the seam section with the set speed, irrespective of the pedal setting.



Seam end with pedal
When this function is activated, the seam end is initialised manually with the pedal.



Reverse sewing direction
When this function is activated, the corresponding seam section is sewn in reverse.



Sewing stop
When this function is activated, sewing stops automatically at the send of the seam section.

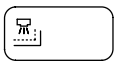

Seam section end with sensor
Opens the menu for entering the seam depth and the correction value for corner stitches, see **Chapter 11.02.02 Entering the seam depth.**
When this function is switched on, the sensor recognises the seam end automatically.

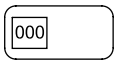

Seam section end with stitch counting
Opens the menu for entering the number of stitches for the current seam section.
When this function is activated, the seam section end is initialised by the stitch counting function.



Selecting seam sections
This function is used to select the seam sections of the current seam program.

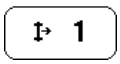

Current seam section
Display and selection of the current seam section using the number keys.



Sewing mode
Quit the seam program input mode and call up the sewing mode.

11.02.01 Selecting the seam types

For better information during programming and sewing, it is possible to show a diagram of different seam types. To do so, the seam types must be allocated to the seam programs. With the exception of the free seam, for each seam type the number of seam sections and the starting point is set. The functions and values in the individual seam sections can be altered. The seam types are divided into groups for flaps, cuffs, collars and shoulder flaps. In additions, one free description space is available, if it is not possible to select a pre-assigned work step from one of the groups. The group currently activated is shown by an inverse symbol.

- Switch on the machine.
- Select a program number, see **Chapter 9.11 Selecting a seam program.**



- Call up the seam program input function.

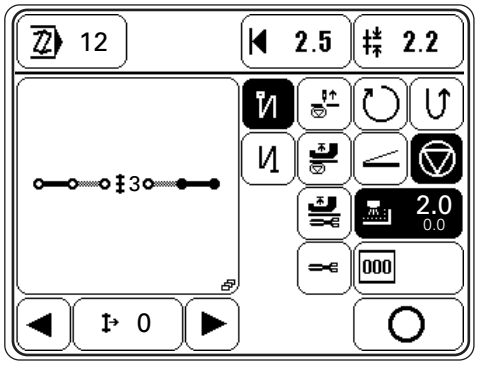

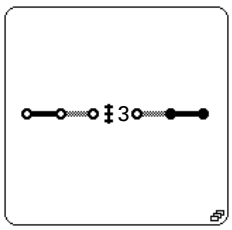

- Call up the seam type selection menu.

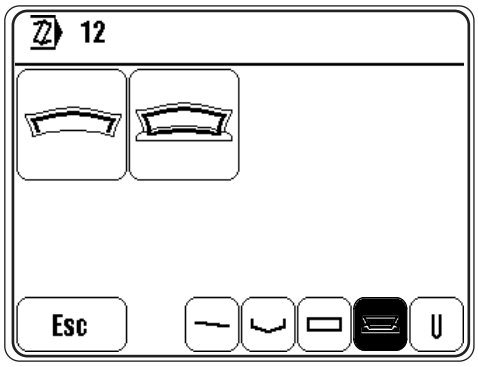



- Select the desired seam group.

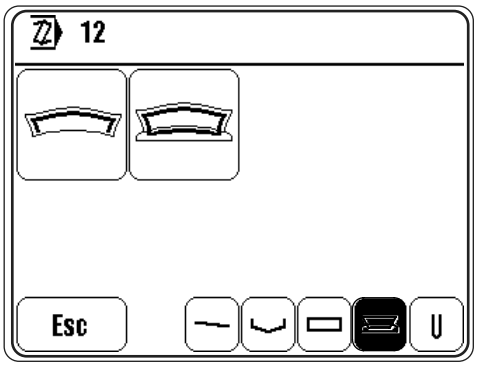

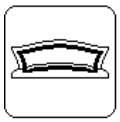

- Select the desired seam type.
  When a seam type has been selected, the machine switches to the seam program input function.

Overview of the seam groups with their corresponding seam types:

Free seam

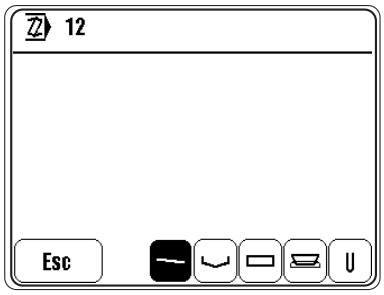

Flap

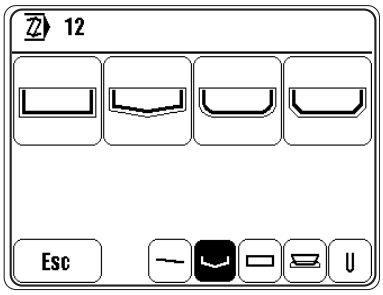

Cuffs

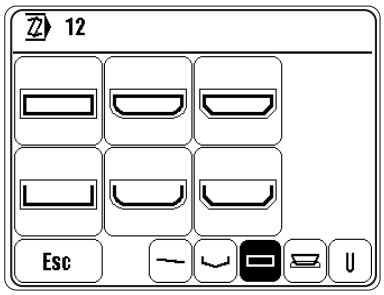

Collars

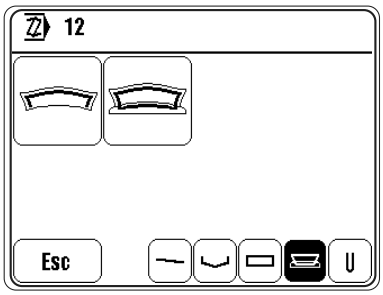

Shoulder flaps

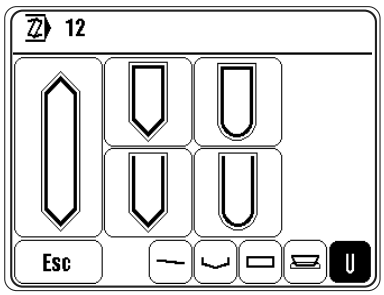

11.02.02 Entering the seam depth

As the edge sensors are arranged for sewing at right angles, if other angles to the edge have to be sewn, a correction value must be entered.

- Switch on the machine.
- Select a program number, see **Chapter 9.11 Selecting a seam program.**



- Call up the seam program input function.

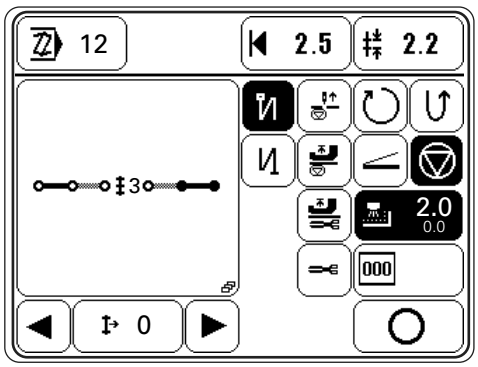

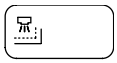

- Call up the seam depth input menu.

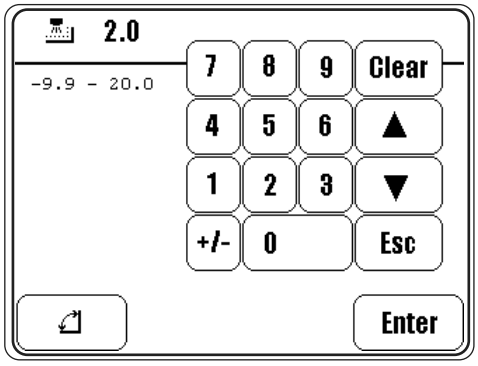

- Enter the desired seam depth.

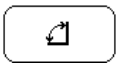

- Call up the correction value input menu.

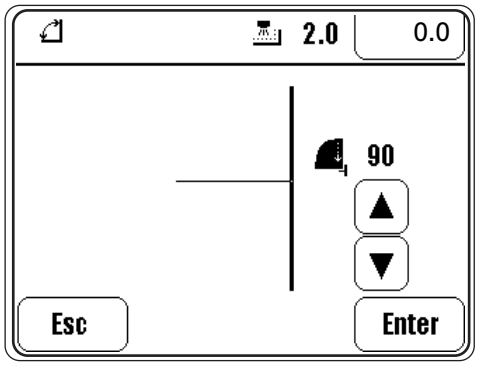

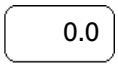

- Using the number keys call up the correction value input menu and enter the correction value

Or

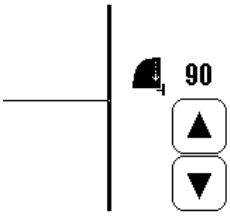

- Place the workpiece on the angle outline on the display and adjust the angle.
  The correction value is calculated automatically from the adjusted angle.



- Conclude the input and take over the correction value.

11.03 Example of how to enter a seam program

This is a description of how to enter a seam program, using a seam with corner stitches as an example.

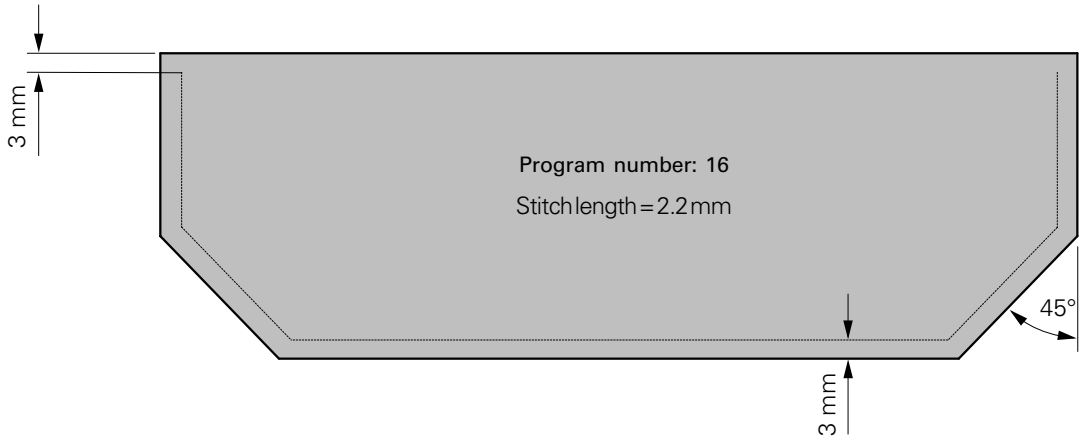

- Switch on the machine.

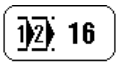

- Call up the seam program number input menu and select program number "16", see **Chapter 9.11 Selecting the seam program.**



- Call up the seam program input function.

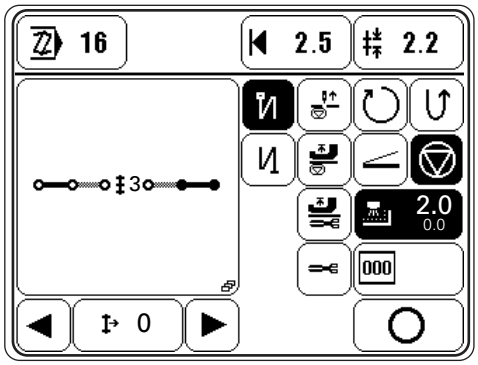

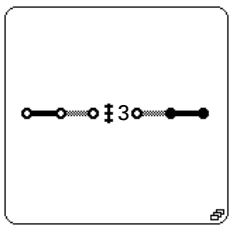

- Call up the menu for selecting the seam types, see **Chapter 11.02.01 Selecting the seam types.**



- Select the desired seam group.

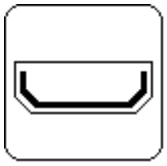

- Select the desired seam type.

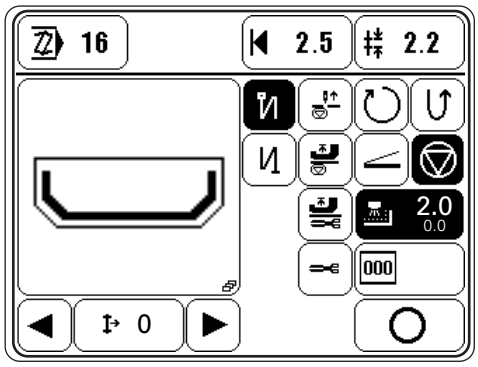

0 Seam section 0

All values entered in this seam section are valid for all other seam sections in the seam program, unless they are altered in the individual seam sections.

2.2
- Call up the stitch length input menu and enter the stitch length "2.2", see **Chapter 9.06 Entering the stitch length.**

3.0
- Call up the menu for entering the edge guide position and enter the edge guide position "3.0", see **Chapter 9.07 Entering the edge guide position.**

3.0
- Call up the seam depth input menu and enter the seam depth "3.0".

1
- Select first seam section.

- Call up the correction value input menu.

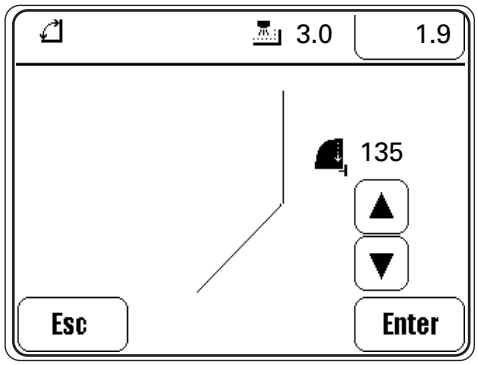

135
- Place the workpiece on the angle outline on the display and adjust the angle. The correction value is calculated automatically from the adjusted angle.

Enter
- Conclude the input and take over the correction value.

- Switch on the automatic sewing stop at the end of the seam section function.

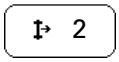

● Select **second seam section.**

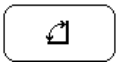

● Call up the correction value input menu.

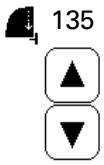

● Place the workpiece on the angle outline on the display and adjust the angle.
The correction value is calculated automatically from the adjusted angle.



● Conclude the input and take over the correction value.



● Switch on the automatic sewing stop at the end of the seam section function.

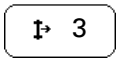

● Select **third seam section.**

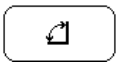

● Call up the correction value input menu.

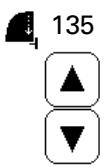

● Place the workpiece on the angle outline on the display and adjust the angle.
The correction value is calculated automatically from the adjusted angle.



● Conclude the input and take over the correction value.



● Switch on the automatic sewing stop at the end of the seam section function.

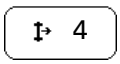

● Select **fourth seam section.**

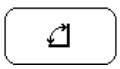

● Call up the correction value input menu.

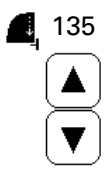

● Place the workpiece on the angle outline on the display and adjust the angle.
The correction value is calculated automatically from the adjusted angle.



● Conclude the input and take over the correction value.



● Switch on the automatic sewing stop at the end of the seam section function.

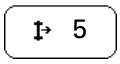

- Select the **fifth seam section.**



- Switch on the thread trimming function.

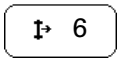

- Select **sixth seam section.**

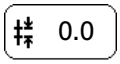

- Call up the stitch length input menu and enter the stitch length "0", see **Chapter 9.06 Entering the stitch length.**
  The fifth seam section is then recognised as the last seam section.



- Conclude the seam program input by taking over the inputs and change to the programmed sewing mode.

12 Care and Maintenance

Cleaning	daily, several times if in continuous operation
Checking the oil level	every 3 months

These maintenance intervals are calculated for the average running time of a single shift operation. If the machine is operated more than this, shorter intervals are recommended.

12.01 Cleaning the machine



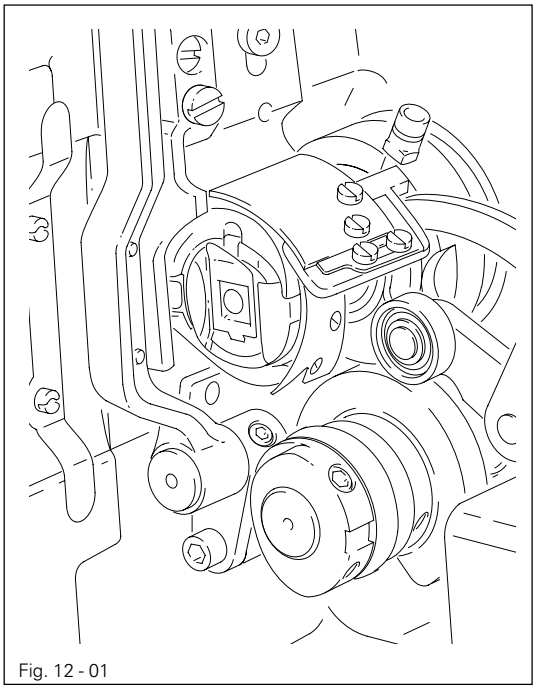

Fig. 12 - 01



Switch off the machine!
Danger of injury due to unintentional starting of the machine!

- Tilt back the machine.
- Clean the hook and hook compartment daily, more often if in continuous operation.



Return the machine to its upright position using **both** hands!
Danger of injury by crushing between the edge of the machine and the table top!

12.02 Topping up the oil tank

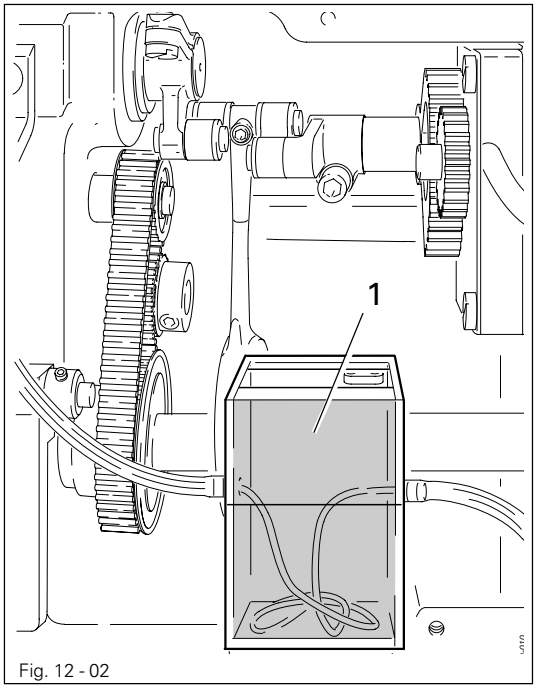

Fig. 12 - 02

The oil reservoir must always have oil in it.

- Whenever it is necessary to refill the reservoir, tilt back the machine and let it rest on the sewing head support.
- Fill oil through hole **1** into the reservoir **2** up to the level of the front edge (see arrow).

Return the machine to its upright position using **both** hands!
Danger of injury by crushing between the machine and the table top!

Only use oil with a mean viscosity of 10.0 mm^2/s at 40°C and a density of 0.847 g/cm^3 at 15°C.

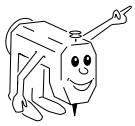

We recommend PFAFF sewing machine oil, part no. 280-1-120 105.

13 Adjustment



No C-clamp should be fastened to the needle bar of the PFAFF 2481-980/30.
This could cause damage to the special coating of the needle bar.

13.01 Notes on adjustment

All following adjustments are based on a fully assembled machine and may only be carried out by expert staff trained for this purpose.
Machine covers, which have to be removed and replaced to carry out checks and adjustments, are not mentioned in the text.
The order of the following chapters corresponds to the most logical work sequence for machines which have to be completely adjusted. If only specific individual work steps are carried out, both the preceding and following chapters must be observed.
Screws, nuts indicated in brackets ( ) are fastenings for machine parts, which must be loosened before adjustment and tightened again afterwards.



Unless stated otherwise, during all adjustment work the machine must be disconnected from the electric and pneumatic power supply!
Danger of injury if the machine is started accidentally!

13.02 Tools, gauges and other accessories for adjusting

- 1 set of screwdrivers with blade widths from 2 to 10 mm
- 1 set of wrenches with jaw widths from 7 to 14 mm
- 1 set of Allan keys from 1.5 to 6 mm
- 1 metal rule, (Part No. 08-880 218-00)
- 1 feed dog adjustment gauge, Part No. 61-111 639-71
- 1 adjustment pin (5 mm dia.), Part No. 13-033 346-05
- 1 adjustment gauge for tightening the belt of the hook drive, part no. 61-111 639-76
- Adjustment gauge, part No. 61-111 639-73
- Sewing thread and test material

13.03 Abbreviations

TDC = top dead center
BDC = bottom dead center

13.04 Control and adjustment aids

The positions required during adjustment can be fixed with the help of adjustment pin **1** (part no. 13-033 346-05) and, if necessary, adjustment gauge **3** (part no. 61-111 639-73).

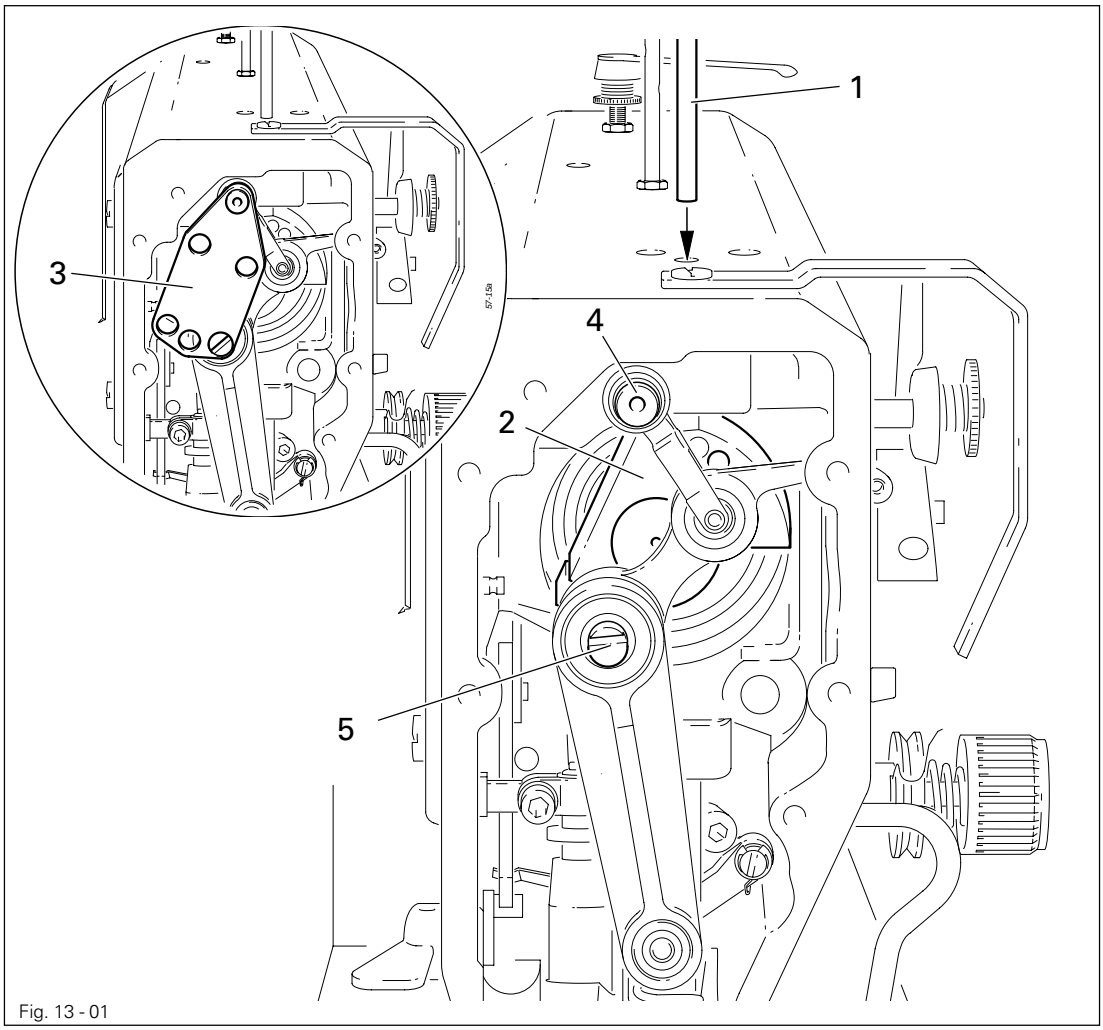

Fig. 13 - 01

Needle bar position 1.8 mm past b.d.c.

- Turn the balance wheel until the needle bar is approximately in the required position.
- Insert adjustment pin **1** in the hole.
- Move the balance wheel fractionally to and fro until adjustment pin **1** engages in crank **2**.

Needle bar position 0.6 mm past b.d.c.

- Bring the needle bar approximately into the required position.
- Fit adjustment gauge **3** to pins **4** and **5**, paying attention to the right side (for 30 mm or 36 mm needle bar stroke).

13.05 Adjusting the basic machine

13.05.01 Basic position of the machine drive unit

This adjustment is only necessary, if toothed belt **2** was removed.

Requirement
When the needle bar is positioned 0.6 mm past b.d.c., the markings **3** and **4** should be in alignment.

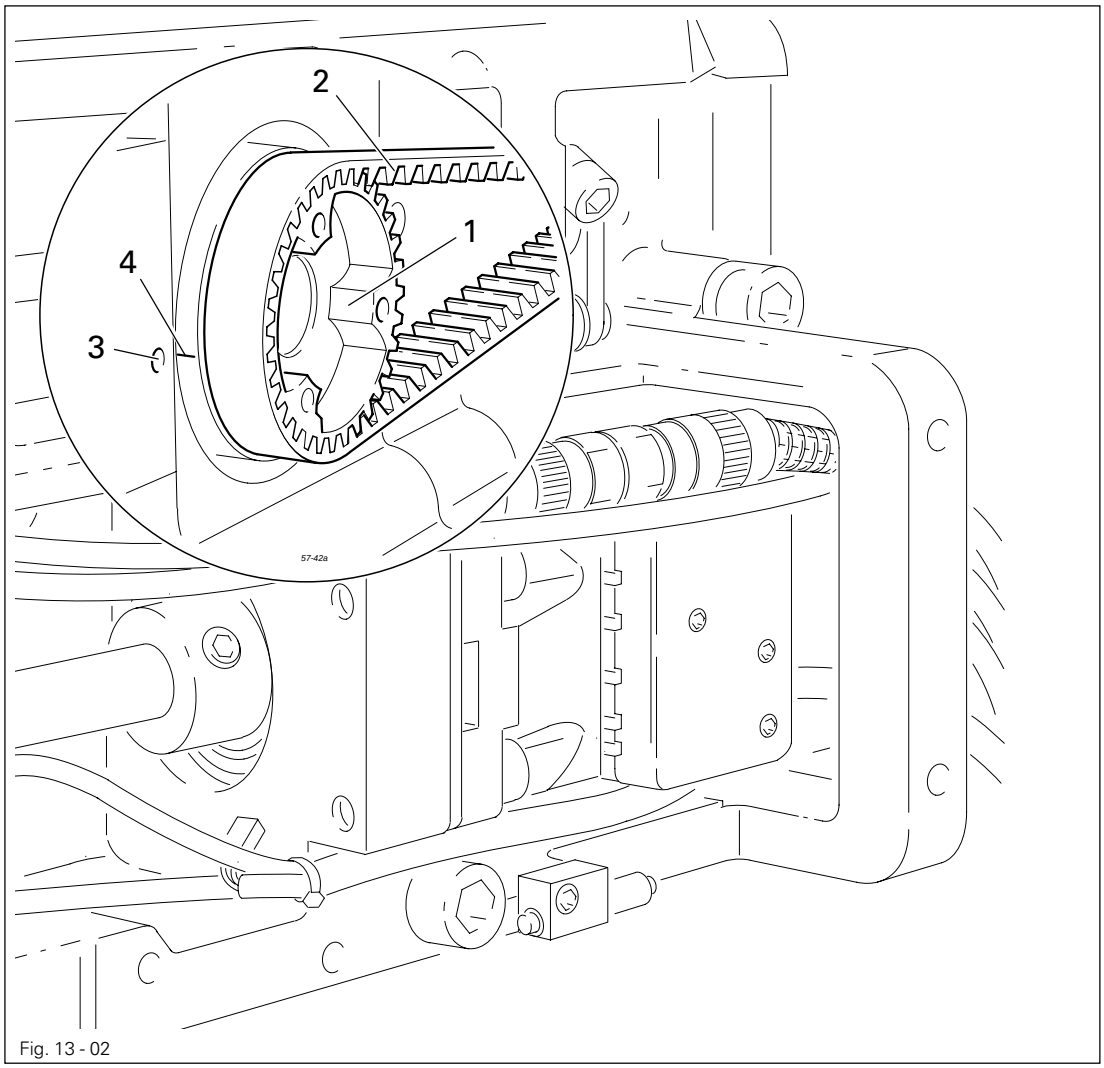

Fig. 13 - 02

- Bring needle bar to 0.6 mm past b.d.c.
- Adjust the toothed belt wheel **1** according to the **requirement** and slide on toothed belt **2**.

When installing the motor pay attention to the correct position of shaft flange, shock absorber and motor flange!

The second screw on the toothed belt wheel **1** is a cornet screw.

13.05.02 Preadjusting the needle height

Requirement
When the needle bar is positioned 1.8 mm above BDC, the mark on the needle bar **1** must be flush with the bottom edge of the needle bar frame **3**.

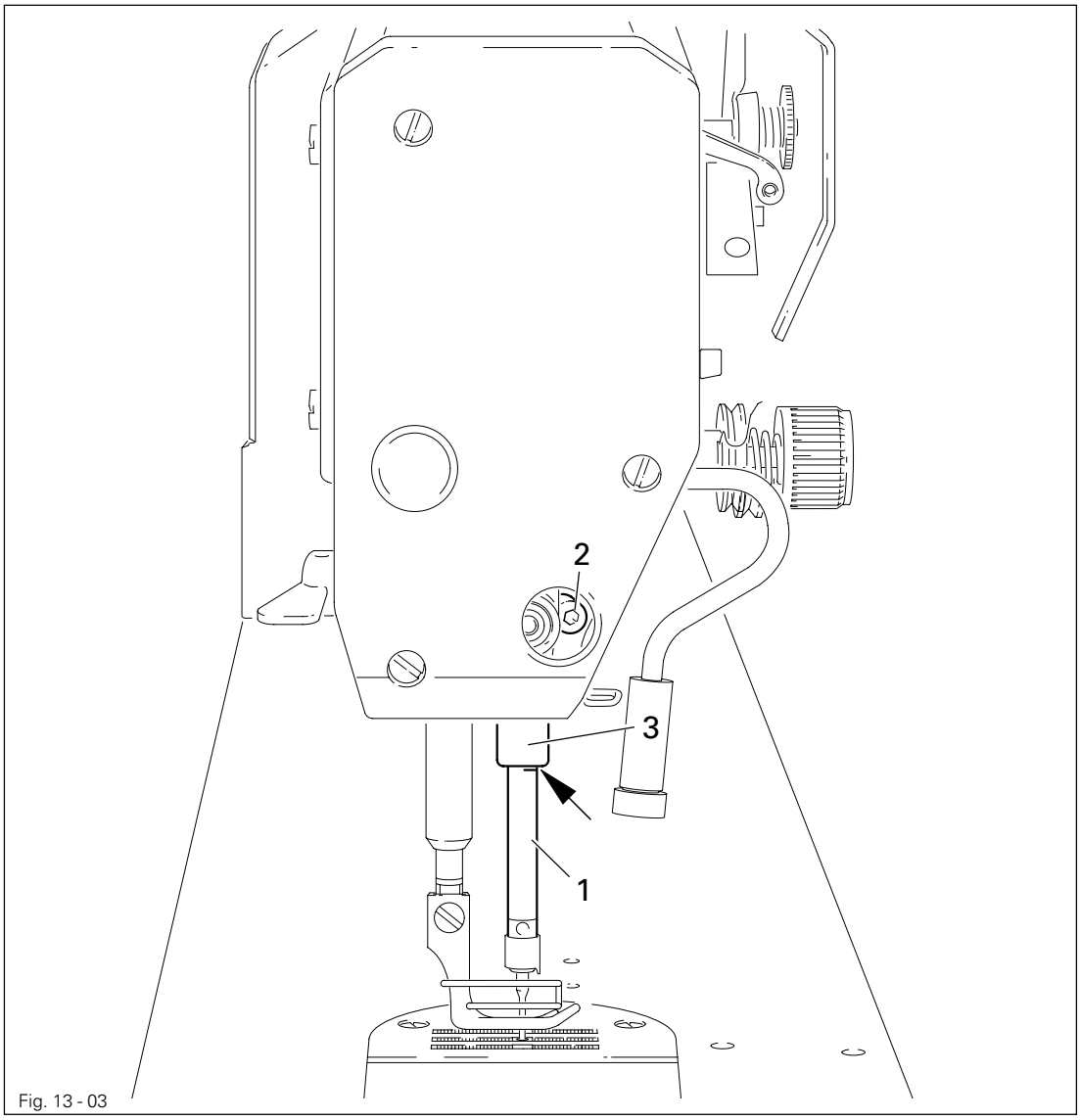

Fig. 13 - 03

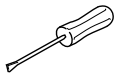

- Set needle bar at 1.8 mm past b.d.c. and block machine with blocking pin, see **Chapter 13.04 Checking and adjusting aids**.
- Move needle bar **1** (screw **2**), without turning it, according to the requirement.

13.05.03 Neutral position of the bottom feed dog

Requirement

With the stitch length set at "0"

1. The marking on the toothed segment **1** should be positioned in the centre of the toothed wheel shaft **3**.
2. Cranks **4** and **6** should be in alignment and there should be no feeding motion of the bottom feed dog when the balance wheel is turned.

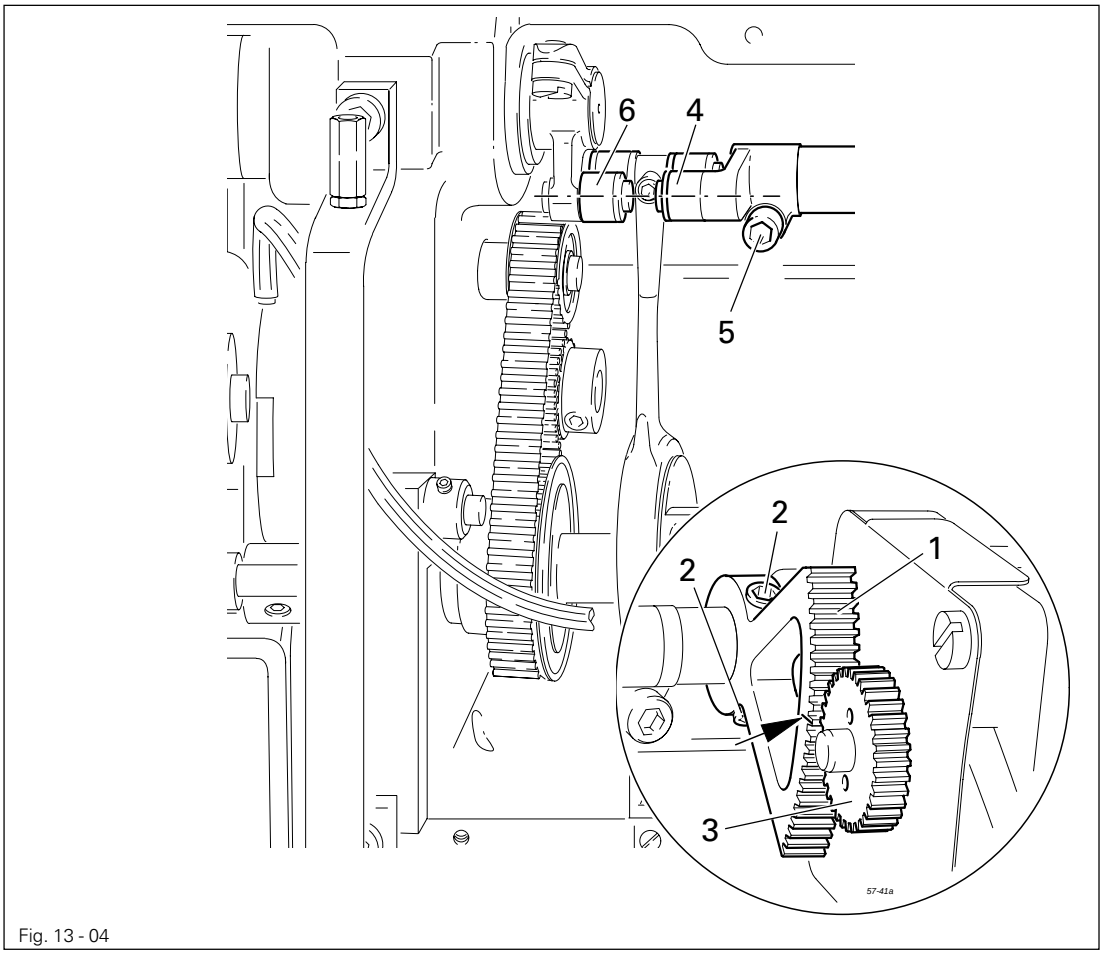

Fig. 13 - 04

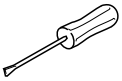

- Switch on the machine.

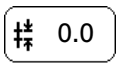

- On the control panel set the stitch length at "0" and turn the balance wheel until the stitch length control motor reacts.
- Make sure that parameter **834** is set at "0", see **Chapter 13.11 Parameter settings.**
- Adjust tooth segment **1** (screws **2**) according to **requirement 1,** without turning toothed wheel **3**.
- Adjust crank **4** (screws **5**) according to **requirement 2.**
- Switch off the machine.

13.05.04 Zero position of the needle feed

Requirement
When the stitch length is set at "0", there should be no feeding motion of the needle bar when the balance wheel is turned.

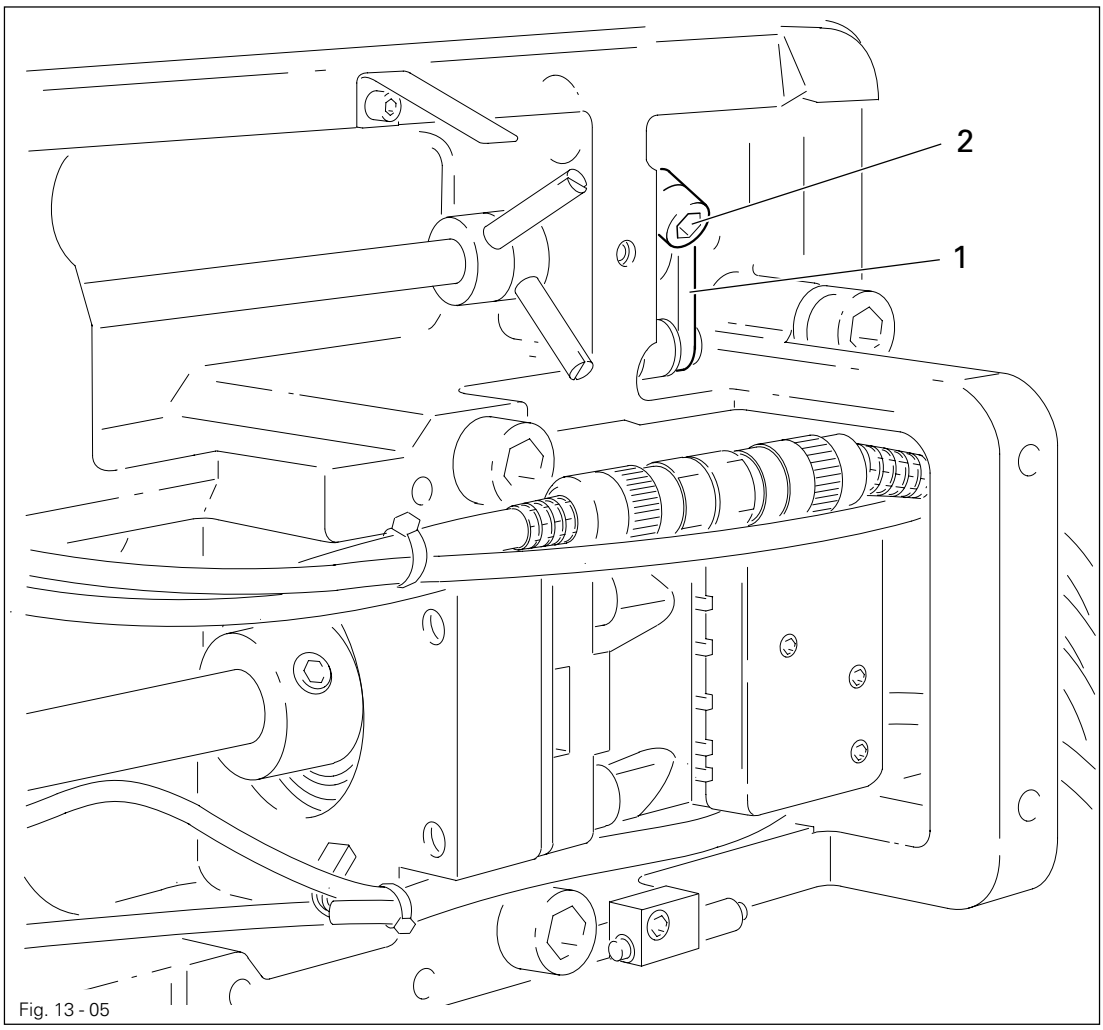

Fig. 13 - 05

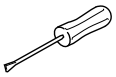

- Switch on the machine.

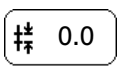

- On the control panel set the stitch length at "0" and turn the balance wheel until the stitch length control motor reacts.
- Make sure that parameter **834** is set at "0", see **Chapter 13.11 Parameter settings.**
- Adjust crank **1** (screw **2**) according to the **requirement.**

- Switch off the machine.

13.05.05 Feeding motion of the bottom feed dog

Requirement
With the needle bar positioned **0.6 mm past b.d.c.** the bottom feed dog should not move, when shaft **3** is turned backwards and forwards.

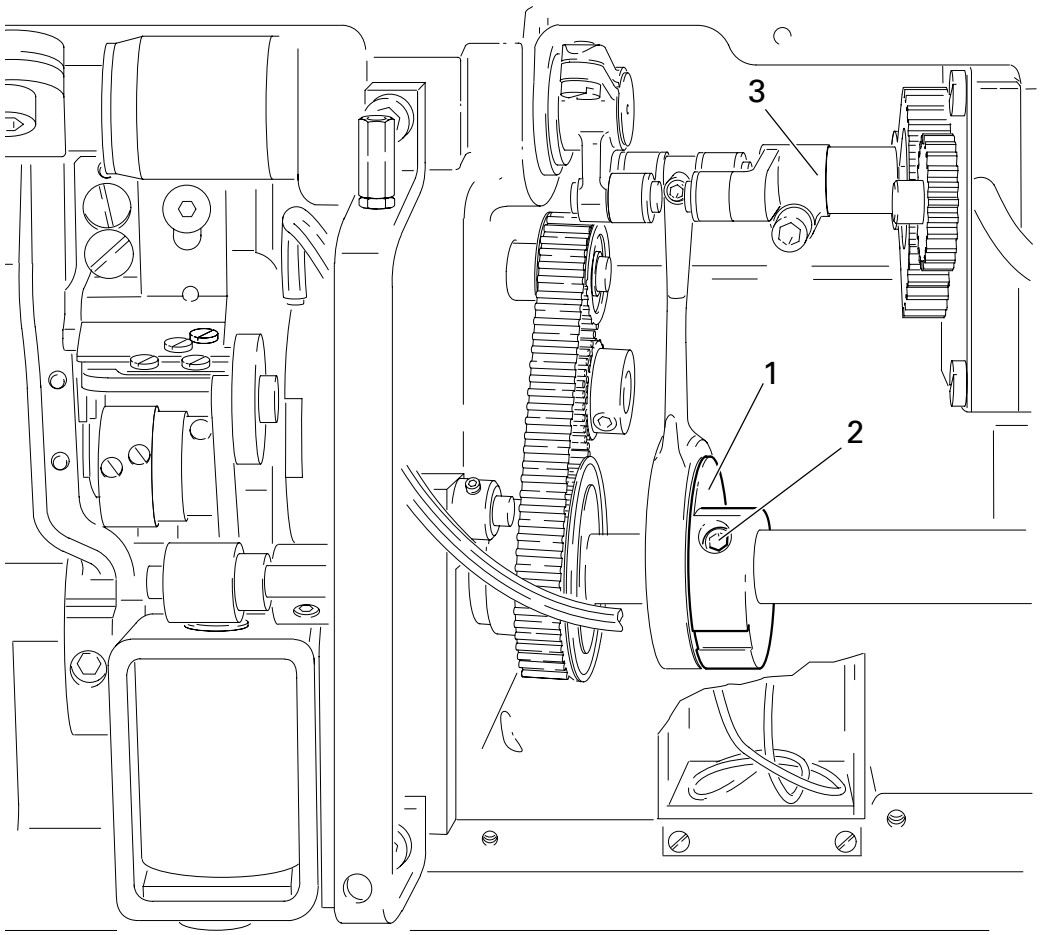

Fig. 13 - 06

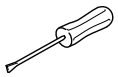

- Position the needle bar at 0.6 mm past b.d.c.
- Adjust eccentric **1** (screws **2**) according to the **requirement,** without moving it sideways.

13.05.06 Feeding motion of the needle feed

Requirement
With the needle bar positioned **0.6 mm past b.d.c.** the needle should not move, when shaft **3** is turned backwards and forwards.

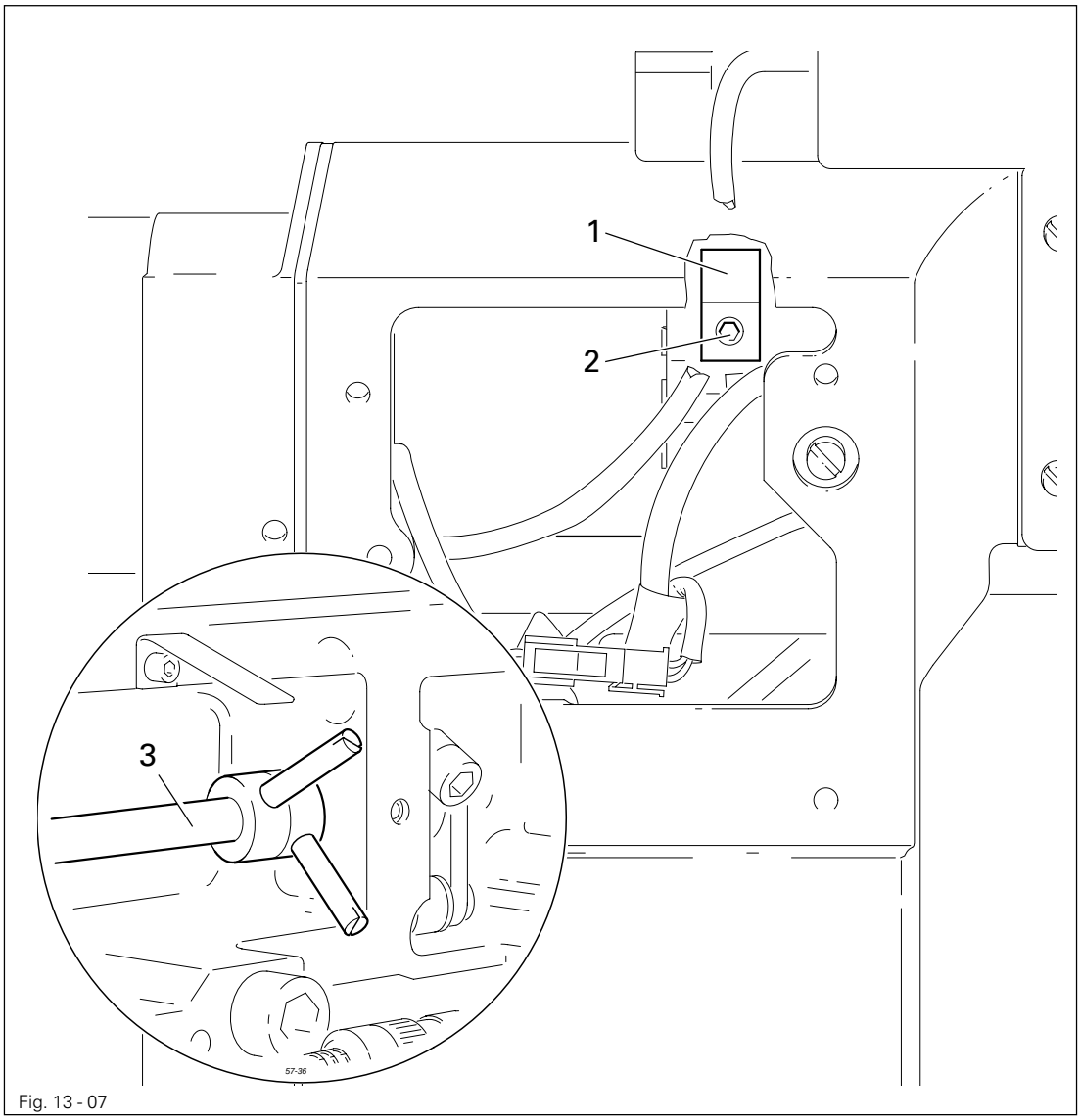

Fig. 13 - 07

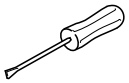

- Position the needle bar at 0.6 mm past b.d.c.
- Adjust eccentric **1** (screws **2**) according to the **requirement.**

13.05.07 Lifting stroke of the bottom feed dog

Requirement

When the needle bar is positioned **0.6 mm past b.d.c.** and the stitch length is set at "0"

1. The bottom feed dog should be at the top of its stroke and
2. The control cam **3** should be resting on the feed lifting eccentric **1**.

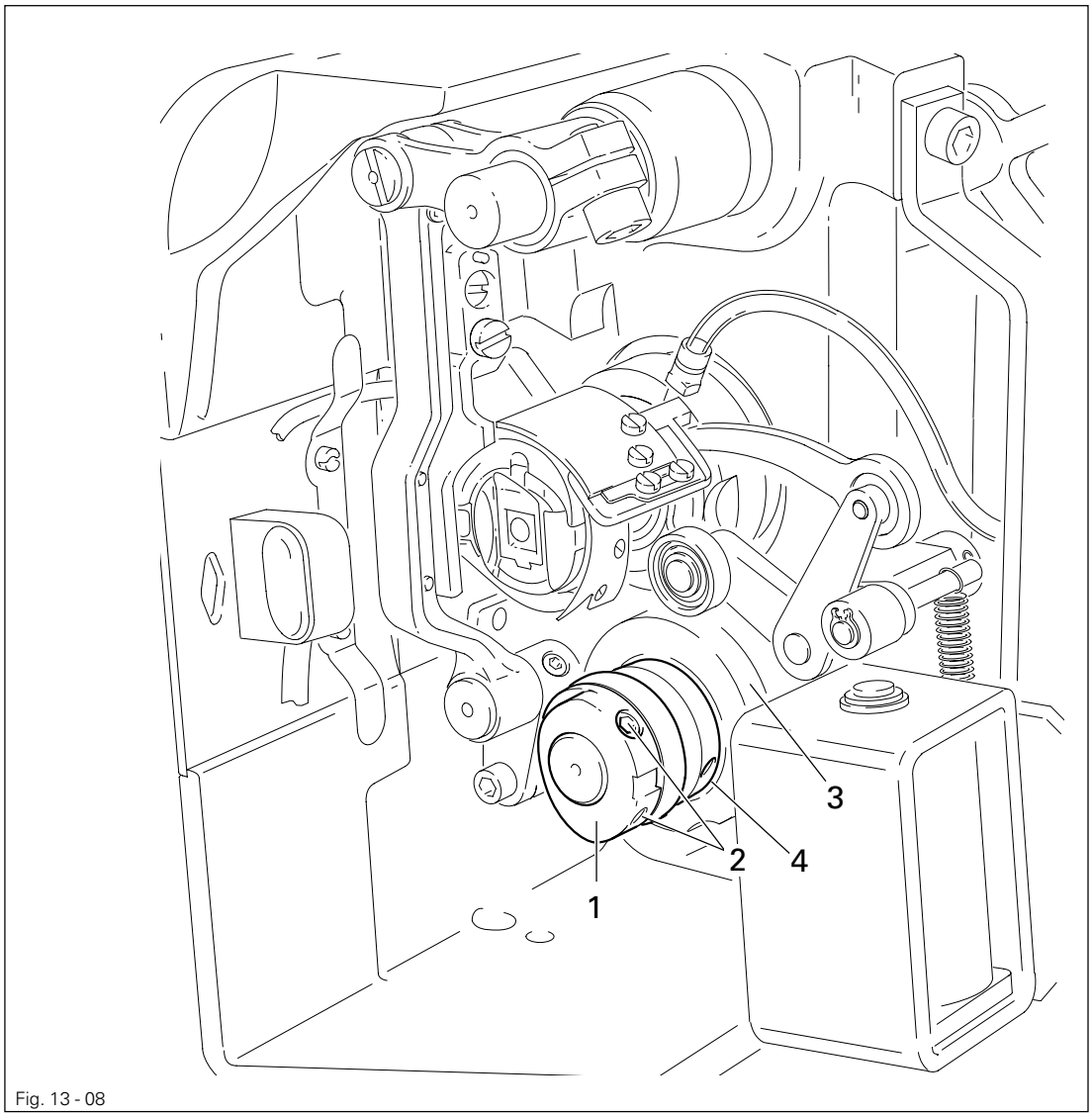

Fig. 13 - 08

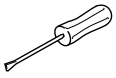

- Switch on the machine.

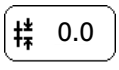

- Set the stitch length at "0" and bring the needle bar to 0.6 mm past b.d.c.
- Turn the balance wheel until the stitch length control motor reacts.
- Adjust eccentric **1** (screws **2**) according to **requirement 1.**
- Adjust control cam **3** (screws **4**) according to **requirement 2** and switch off the machine.

13.05.08 Height of the bottom feed dog / Position in the needle plate cutout

Requirement

At the top of its stroke, when the stitch length is set at "0", the bottom feed dog **1**

1. Should be positioned in the centre of the needle plate cutout as seen from the side and in feeding direction and
2. Rest on the feed dog adjustment gauge **2** over its whole length.

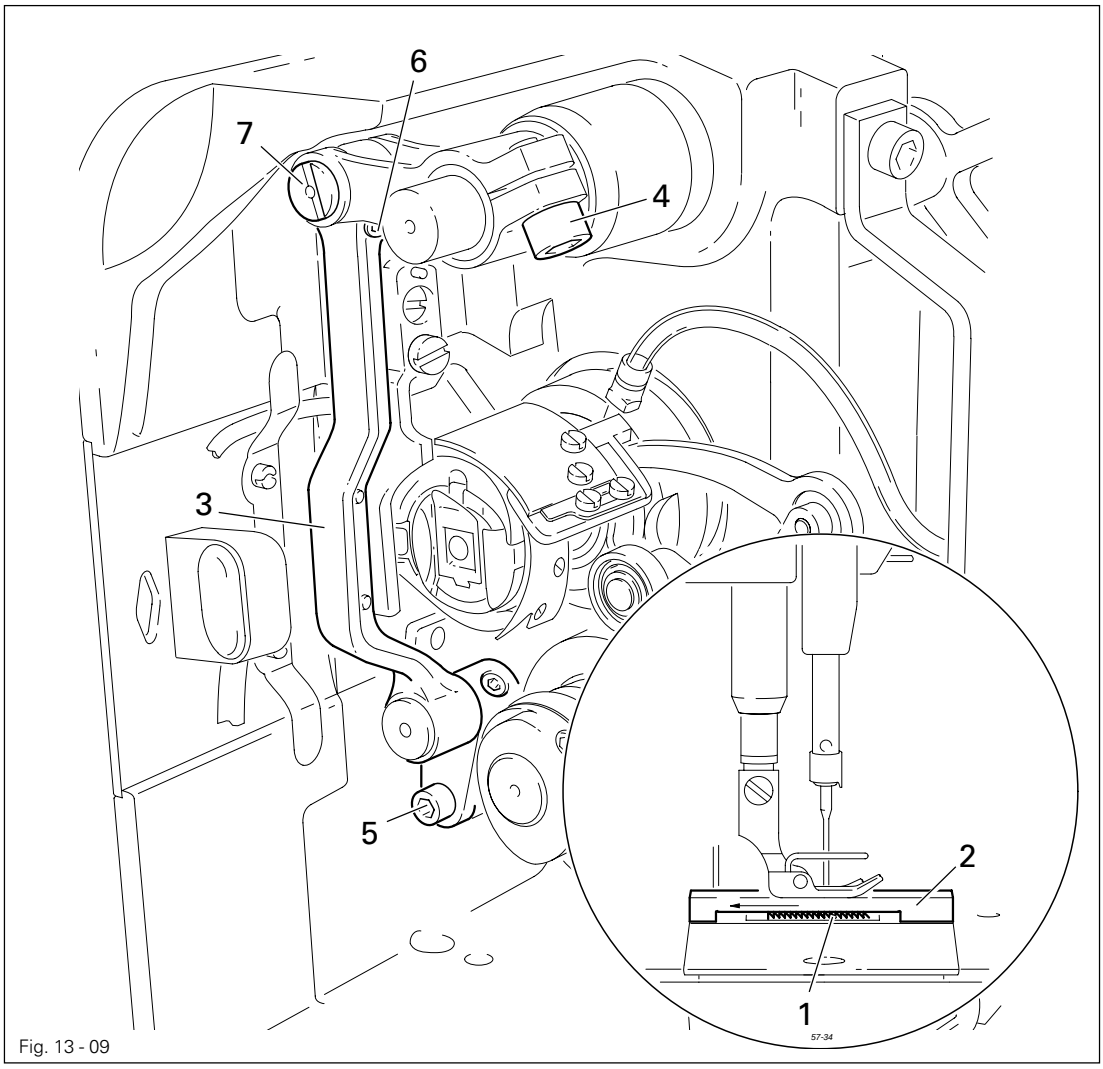

Fig. 13 - 09



- Switch on the machine and set the stitch length at "0".
- Turn the balance wheel until the stitch length control motor reacts.
- Bring the bottom feed dog **1** to the top of its stroke.
- Raise the presser foot, position the feed dog adjustment gauge **2** over the needle plate cutout with its front edge flush with the edge of the needle plate, as shown in **Fig. 13-09,** and lower the presser foot.
- Adjust bracket **3** (screw **4**) according to **requirement 1.**
- Adjust bracket **3** or eccentric **7** (screws **5** and **6**) according to **requirement 2.**
- Switch off the machine.

13.05.09 Needle in needle hole centre

Requirement
The needle should enter the needle hole exactly in the centre.

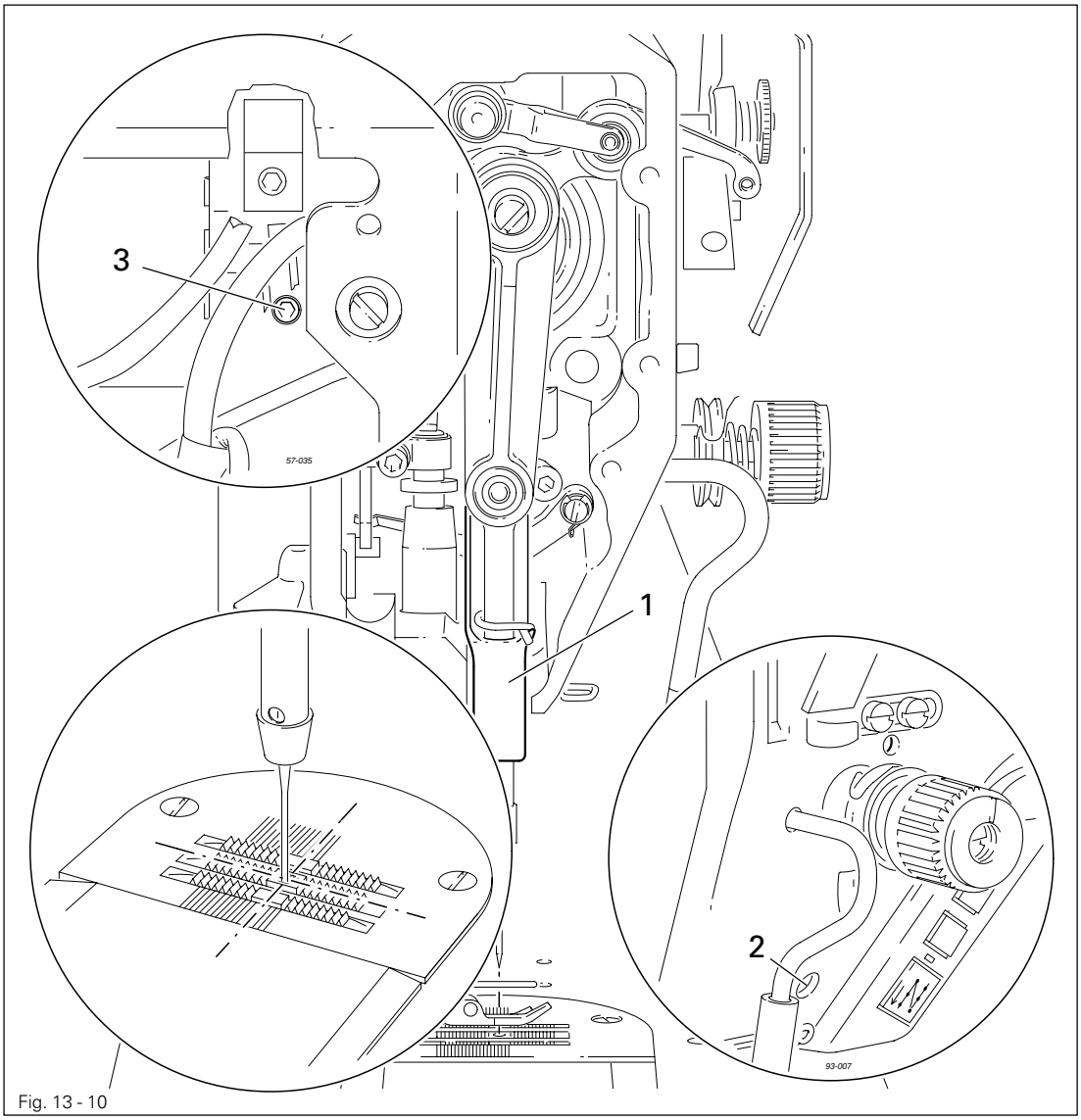

Fig. 13 - 10

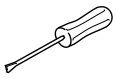

- Switch on the machine.

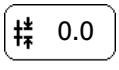

- On the control panel set the stitch length at "0" and turn the balance wheel until the stitch length control motor reacts.
- By turning the balance wheel position the needle in the needle hole.
- Adjust needle bar frame **1** (screws **2** and **3**) according to the **requirement.**
- Switch off the machine.

13.05.10 Hook shaft bearing and toothed belt tension

Requirement

1. The front edge of the hook shaft **5** should be at a distance of **14.5 mm** from the centre of the needle, whereby the groove in the hook shaft bearing **1** (see arrow) should be parallel to the bed-plate and point in the opposite direction to the sewing direction.
2. The toothed belt should be tightened so that when the gauge is placed on it, the marking in the gauge window should match the marking on the bushing.

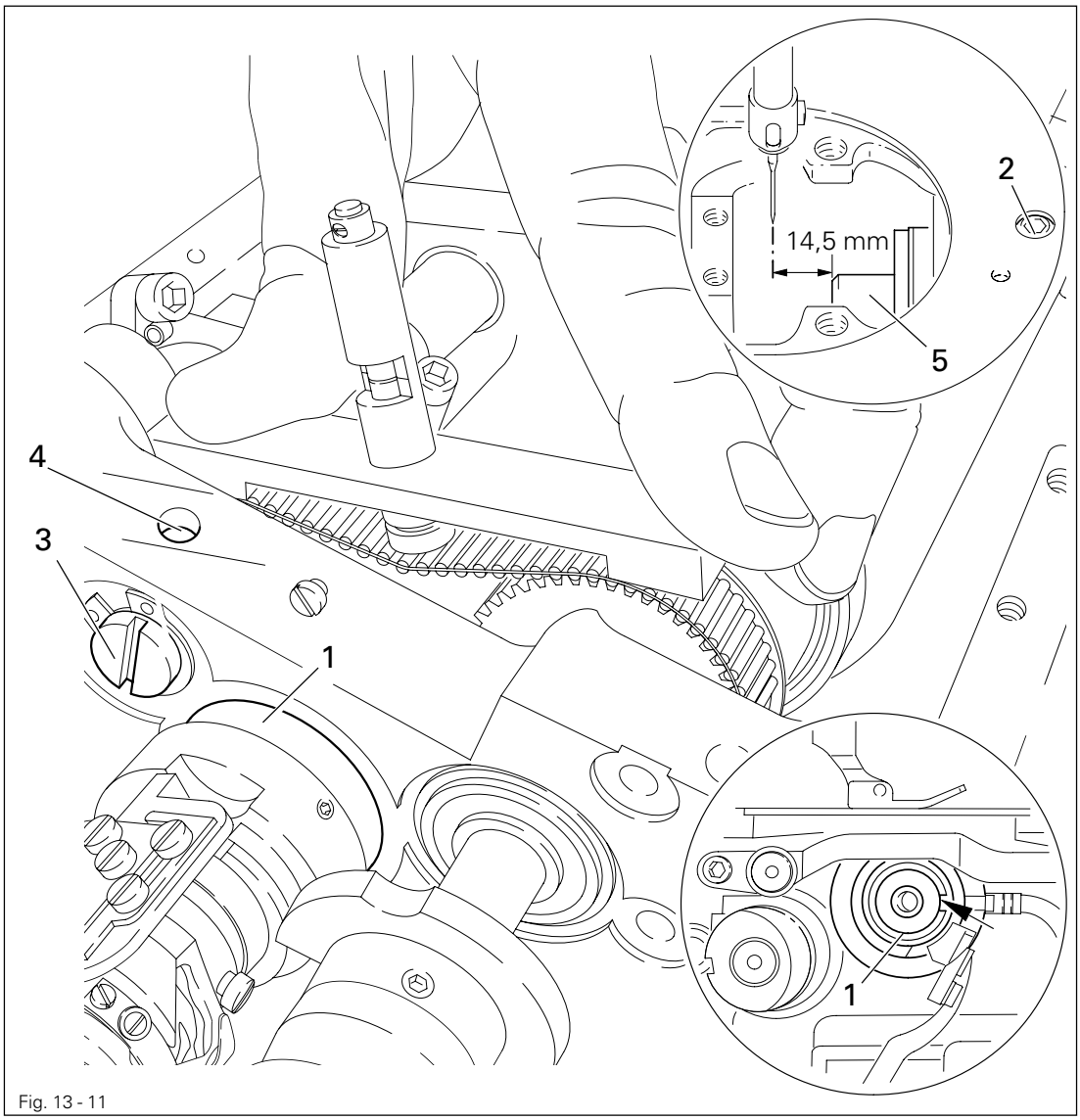

Fig. 13 - 11

- Align the hook bearing shaft **1** (screw **2**) in accordance with **requirement 1.**
- Press the gauge (part no. 61-111 639-76) onto the toothed belt, so that it is centred to it and touching the bearing on the rock shaft. The gauge window must point towards the hook.
- Turn eccentric **3** (screw **4**) clockwise in accordance with **requirement 2**, taking care that the axial position of eccentric **3** is not changed.

13.05.11 Hook lubrication

Requirement

1. The centrifugal disk **1** must be positioned **1.5 mm** in front of the oil ring **3**.
2. When the machine is running at full speed, **after approx. 10 seconds** a mark should be made by a fine stripe of oil on the strip of paper placed over the needle plate cutout.

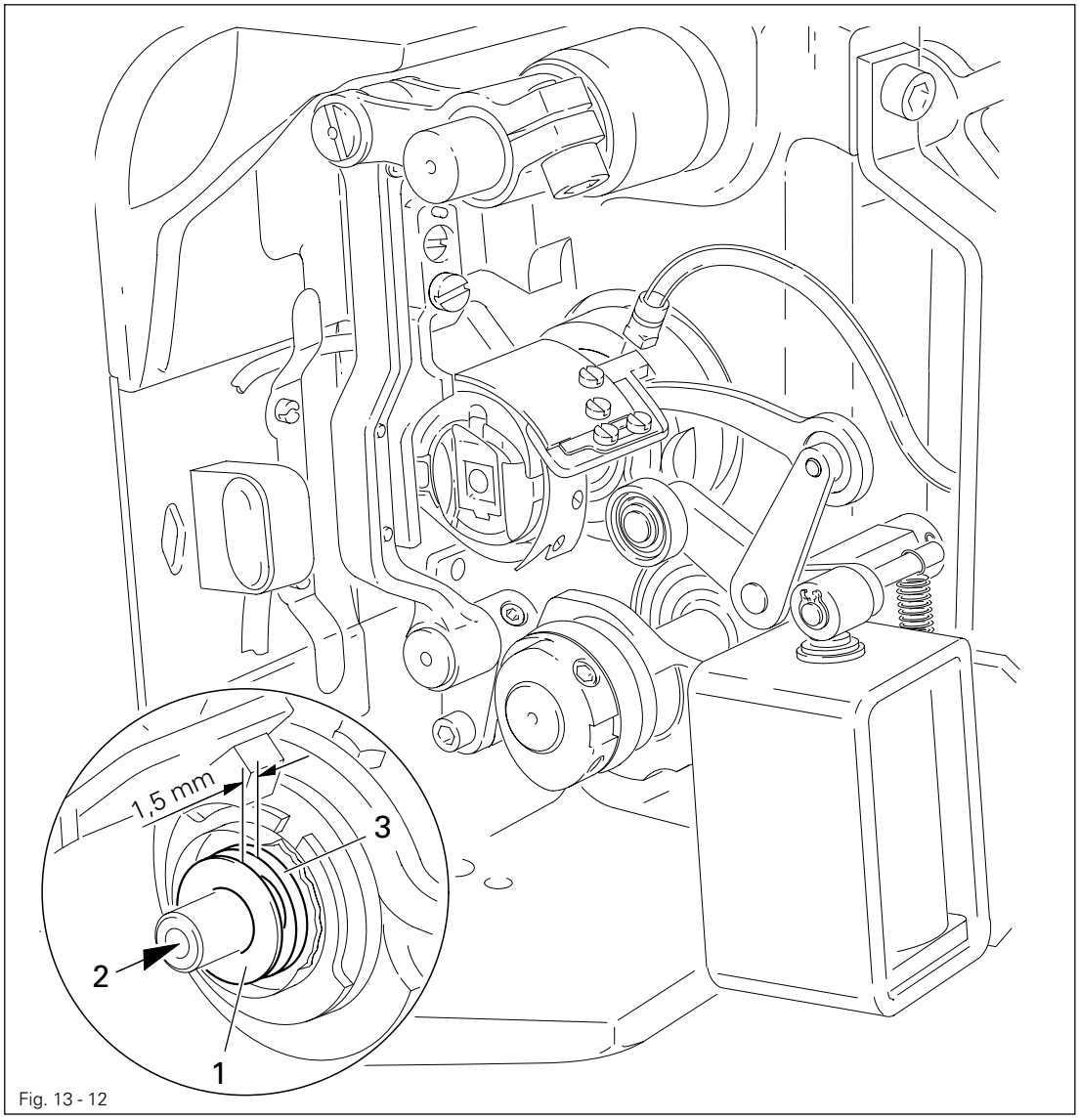

Fig. 13 - 12

The adjustment is only necessary if the wick has been replaced.
When replacing the wick, make sure that the new wick is impregnated with oil.

- Move the centrifugal disk **1** (screw **2**) according to **requirement 1.**
- Check **requirement 2**. If necessary, move centrifugal disk **1.**

13.05.12 Needle rise, hook-to-needle clearance, needle height and bobbin case position finger

Requirement

With the needle at 1.8 mm after BDC,

1. the hook point **6** must point to the middle of the needle and be at a distance of **0.05 mm - 0.1 mm** to the clearance cut of the needle, and
2. the top edge of the needle eye must be **0.8 mm** below the hook point.
3. Between the projection of the bobbin case position finger **4** and the bottom of the retaining groove there should be a distance of **0.5 mm.**

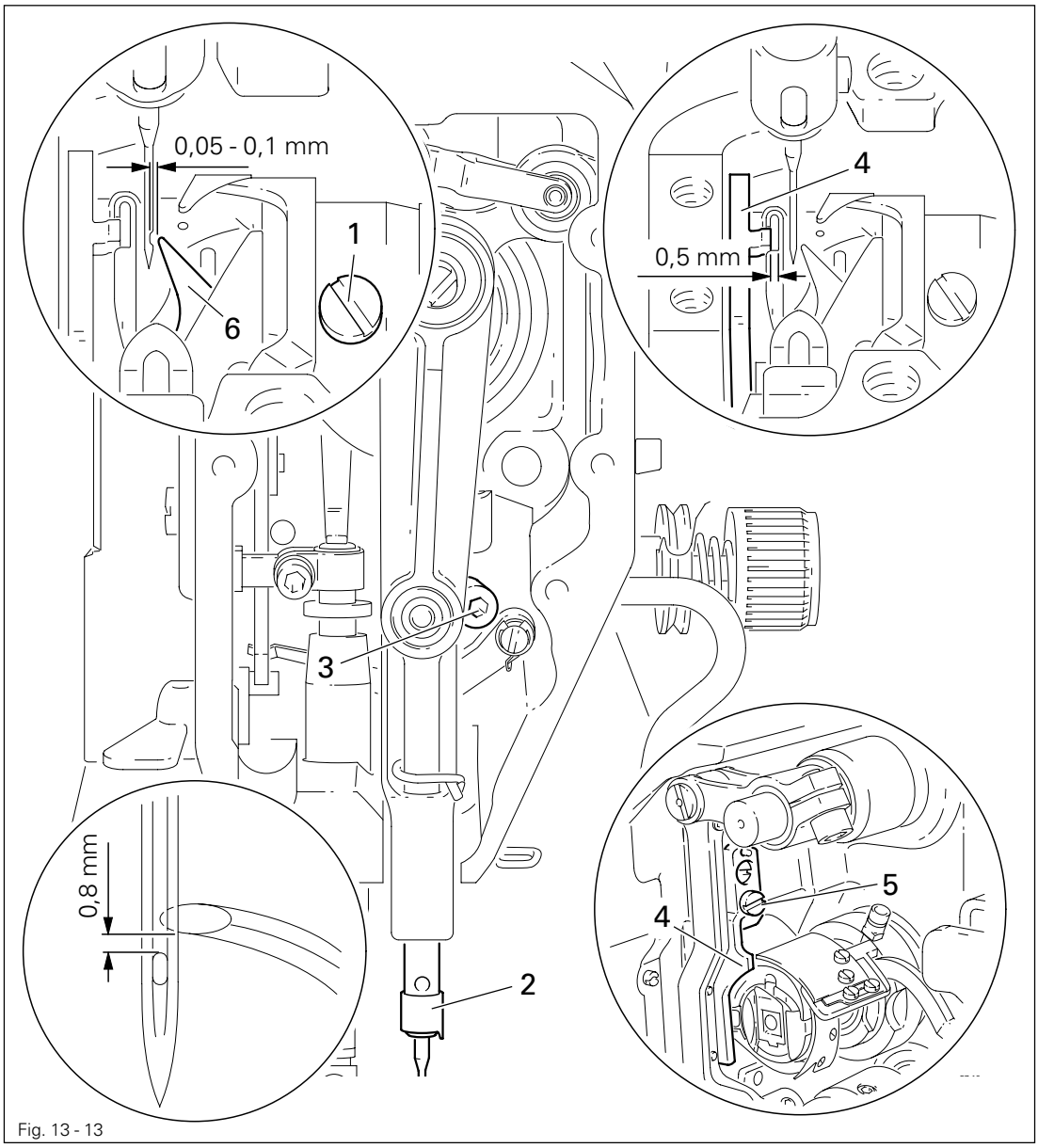

Fig. 13 - 13

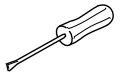

- Switch on the machine.

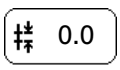

- On the control panel set the stitch length at "0" and turn the balance wheel until the stitch length control motor reacts.

- Switch off the machine.

- Using the adjustment pin, position the needle bar at 1.8 mm after BDC.
- Adjust the hook according to **requirement 1**.
- Tighten screw **1**.
- Move needle bar **2** (screw **3**) without turning it according to **requirement 2.**
- Align bobbin case position finger **4** (screw **5**) according to **requirement 3.**

13.05.13 Thread check spring and slack thread regulator

Requirement

1. The motion of the thread check spring must be completed when the needle point enters the material (spring stroke approx. **7 mm**).
2. When the thread loop is at its largest when going around the hook, the thread check spring must have moved by approx. **1 mm**.

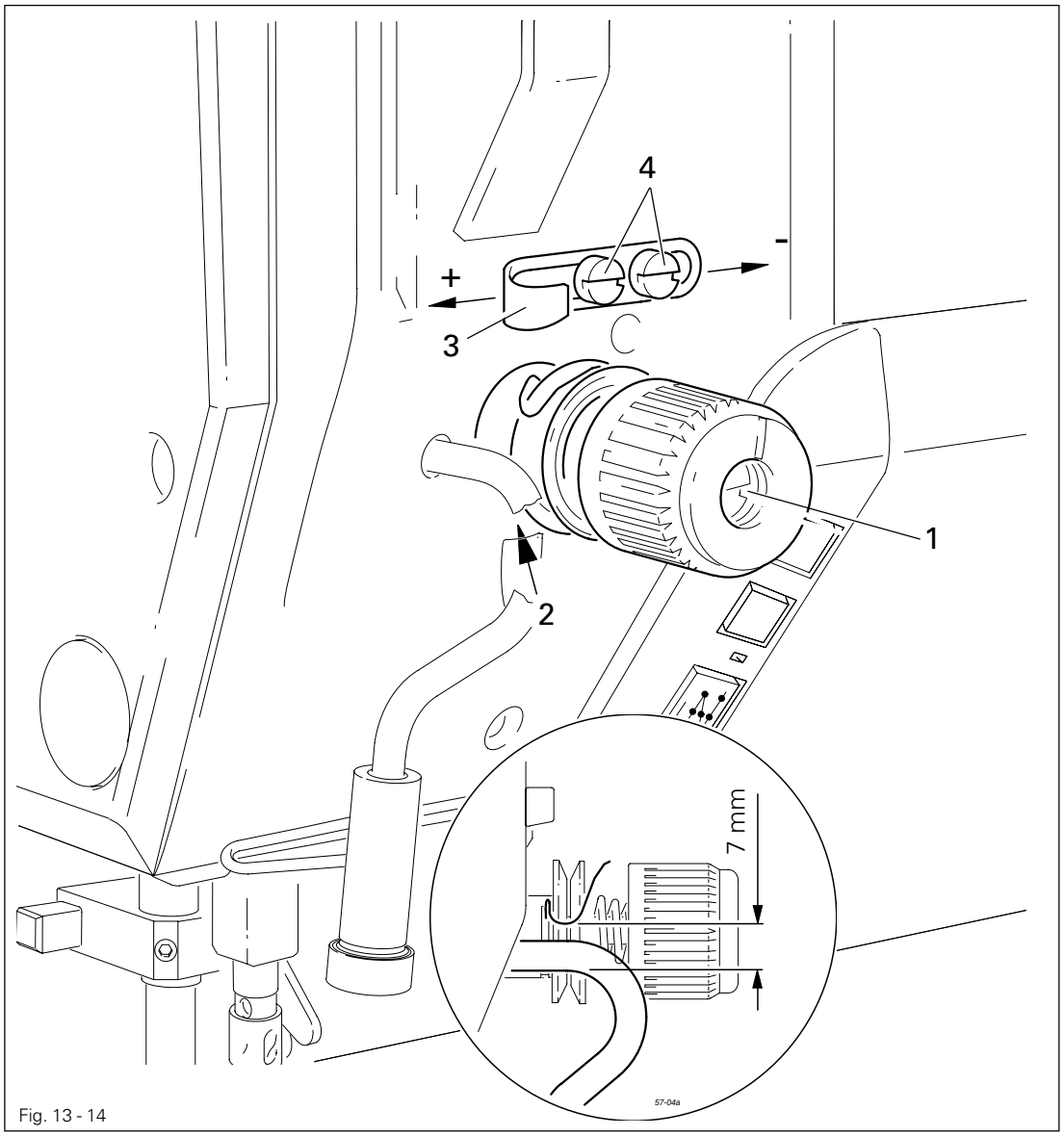

Fig. 13 - 14

- Turn thread tension **1** (screw **2**) according to **requirement 1**.
- Turn thread tension **3** (screw **4**) according to **requirement 2**.

Due to technical sewing reasons it may be necessary to deviate from the spring stroke indicated above.
Move the slack thread regulator **3** (screw **4**) toward the "**+**" (= more thread) or toward the "**-**" (= less thread)

13.05.14 Presser foot clearance

Requirement

1. When the automatic presser foot lift is operated, the clearance between the presser foot and the needle plate should be **7 mm.**
2. When the hand lever is raised, the clearance between the presser foot and the needle plate should be **5 mm.**

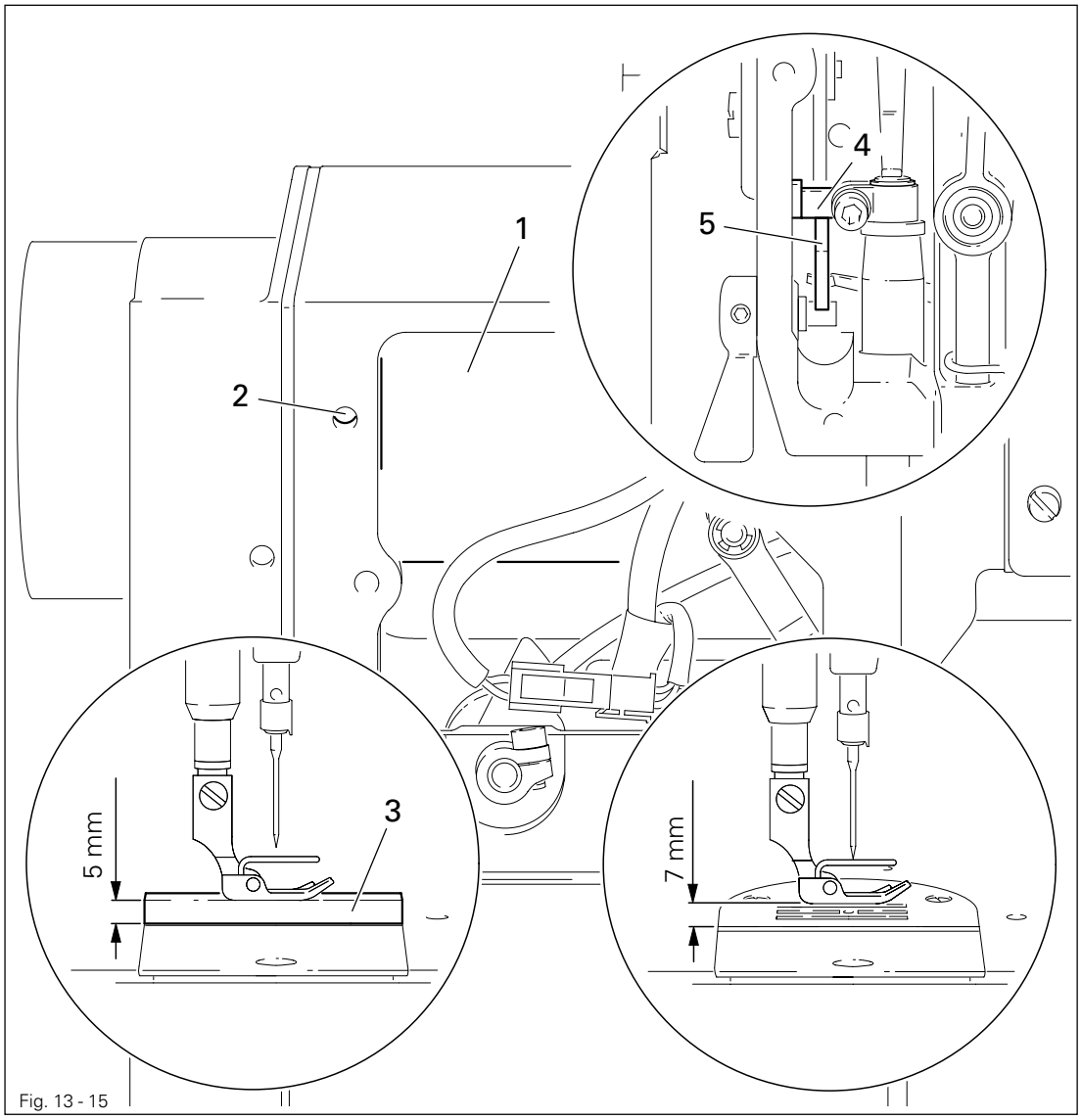

Fig. 13 - 15

- Adjust solenoid **1** (screw **2**) in accordance with **requirement 1.**
- Raise the hand lever and place adjustment gauge **3** (part no. 61-111 639-70) under the presser foot in accordance with **requirement 2.**
- Move presser bar lifting lever **4** against lifting piece **5**.

Make sure that the needle is in the centre of the presser foot.

13.05.15 Setting the zero point of the feed regulator

Requirement
When the stitch length is set at "0", at maximum speed (4500 spm) the needle should always penetrate in the same place.

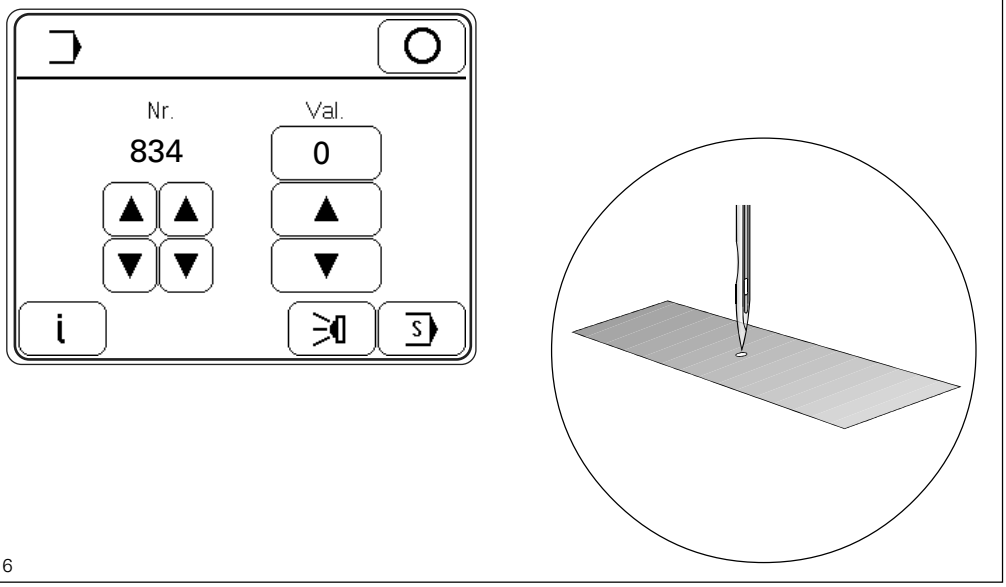

Fig. 13 - 16

- Unthread the machine.
- Switch on the machine.
- Place the workpiece under the presser foot.
- Let the machine sew at maximum speed and check the **requirement.**
  (The workpiece should not move).
- Change the value for parameter **834** within the permissible values in accordance with the **requirement.**

The permissible values for parameter **834** are **"1", "0"** or **"-1".**
If the zero point of the feed regulator cannot be set by selecting one of the permissible values, the mechanical setting must be checked or corrected, see **Chapter 13.05.03 Zero position of the bottom feed dog.**

The zero position of the feed regulator is always recognisable in a range of 3 values. When making the adjustment, select the middle value.

- Switch off the machine.

Find more information on how to select and alter parameters and about descriptions (functions) of the individual parameters in **Chapter 13.11 Parameter settings.**

13.05.16 Stitch length adjustment forwards and in reverse

Requirement
At a maximum speed of 400 spm, the stitch length selected on the control panel should not differ from the actual stitch length when sewing forwards or in reverse.

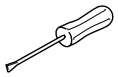

- Thread the machine.
- Switch on the machine.
- Select the stitch length being used on the control panel.
- With parameter **607** limit the maximum speed to 400 spm.
- Set parameter **846** at **100.**
- Place the workpiece under the presser foot.
- Sew a seam with at least 20 stitches.
- Measure the length of the seam over 20 stitches and calculate the actual stitch length.
- If the difference, measured over 20 stitches, is larger than +/- 0.5 mm, the value for parameter 846 must be corrected.
- Take the value for parameter **846** from the table or calculate it with the aid of the formula:

$$\frac{\text{Set stitch length}}{\text{Actual stitch length}} \times 100$$

Stitch length 3,0 mm		Stitch length 2,5 mm		Stitch length 2,0 mm		Stitch length 1,5 mm	
Length over 20 stitches	Value for parameter 846 / 847	Length over 20 stitches	Value for parameter 846 / 847	Length over 20 stitches	Value for parameter 846 / 847	Length over 20 stitches	Value for parameter 846 / 847
58.5	102	48.5	103	38.5	104	28.5	105
59.0	102	49.0	102	39.0	103	29.0	103
59.5	101	49.5	101	39.5	101	29.5	102
60.0	**100**	**50.0**	**100**	**40.0**	**100**	**30.0**	**100**
60.5	99	50.5	99	40.5	99	30.5	98
61.0	98	51.0	98	41.0	97	31.0	97
61.5	98	51.5	97	41.5	96	31.5	95
62.0	97	52.0	96	42.0	95	32.0	94
62.5	96	52.5	95	42.5	94	32.5	92
63.0	95	53.0	94	43.0	93		
63.5	94	53.5	93	43.5	92		
64.0	94	54.0	93				
64.5	93	54.5	92				
65.0	92						

- Select the calculated value for parameter **846** and switch off the machine.



The adjustment of the reverse stitch length is carried out as described in the above work steps under parameter "847**"**, with the reverse feed key pressed, see **Chapter 7.02 Keys on the machine head.** More information about selecting and changing parameters and explanations (functions) of the individual parameters is contained in **Chapter 13.11 Parameter settings.**

13.05.17 Bobbin winder

Requirement

1. With the bobbin winder on, the drive wheel **1** must engage reliably.
2. With the bobbin winder off, the friction wheel **5** must not be driven by the drive wheel **1**.
3. The eccentric pin **3** should be positioned in the centre of the large bobbin chamber.

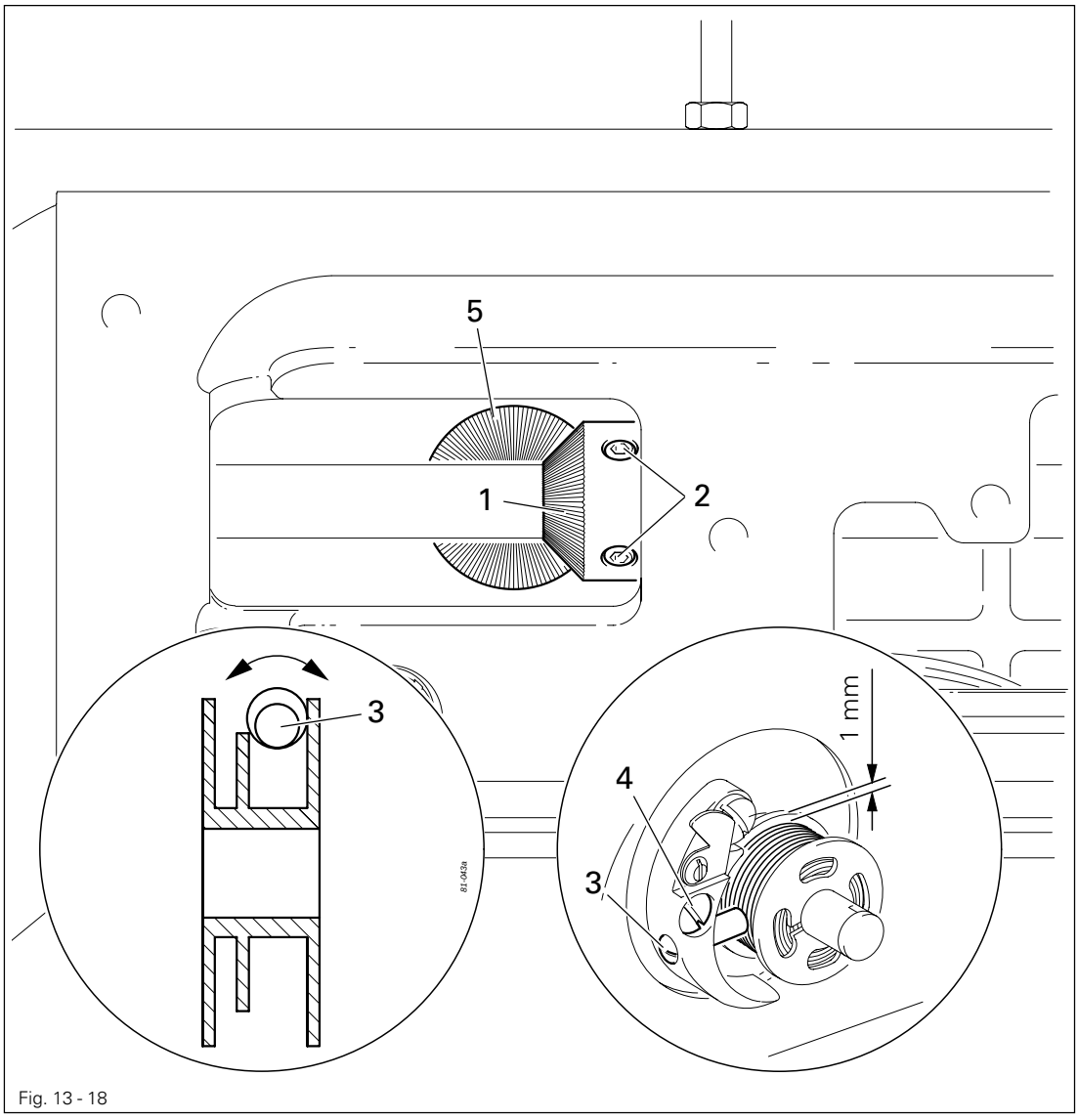

Fig. 13 - 18

- Move drive wheel **1** (screws **2**) in accordance with **requirement 1 and 2.**
- Place a bobbin on the bobbin winder, thread the bobbin and switch on the bobbin winder.
- Adjust pin **3** (screw **4**) in accordance with **requirement 2** and turn it in accordance with **requirement 3.**

13.05.18 Mechanical limiting of the stitch length

Requirement

1. With the maximum stitch length set, the feed dog should not touch the needle plate cut-out when sewing forwards and in reverse.
2. The screws of the stops **1** (forwards sewing) and **3** (reverse sewing) should each have a clearance of **0.3 mm** to the corresponding metal edge.

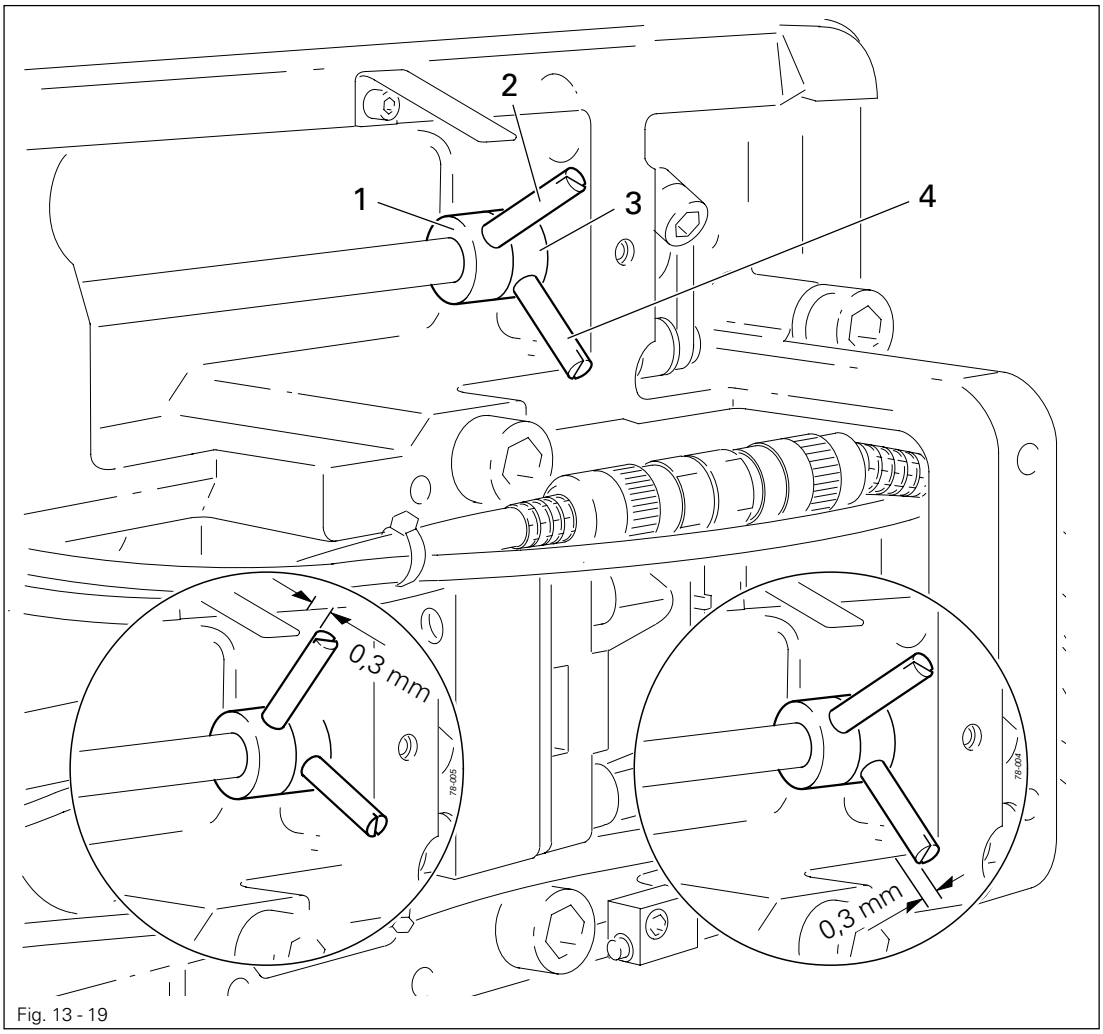

Fig. 13 - 19

- Switch on the machine and set parameter **849** in accordance with **requirement 1,** see **Chapter 13.11 Parameter settings.**

3.5

- Select the maximum stitch length on the control panel.
- Adjust stop **1** (screw **2**) in accordance with **requirement 2.**
- Holding down the reverse sewing key, sew 2 stitches, see **Chapter 7.02 Keys on the machine head.**
- Adjust stop **3** (screw **4**) in accordance with **requirement 2.**
- Switch off the machine.

13.05.19 Presser foot pressure

Requirement
The material must be fed reliably. In the process, pressure marks on the material must not be made.

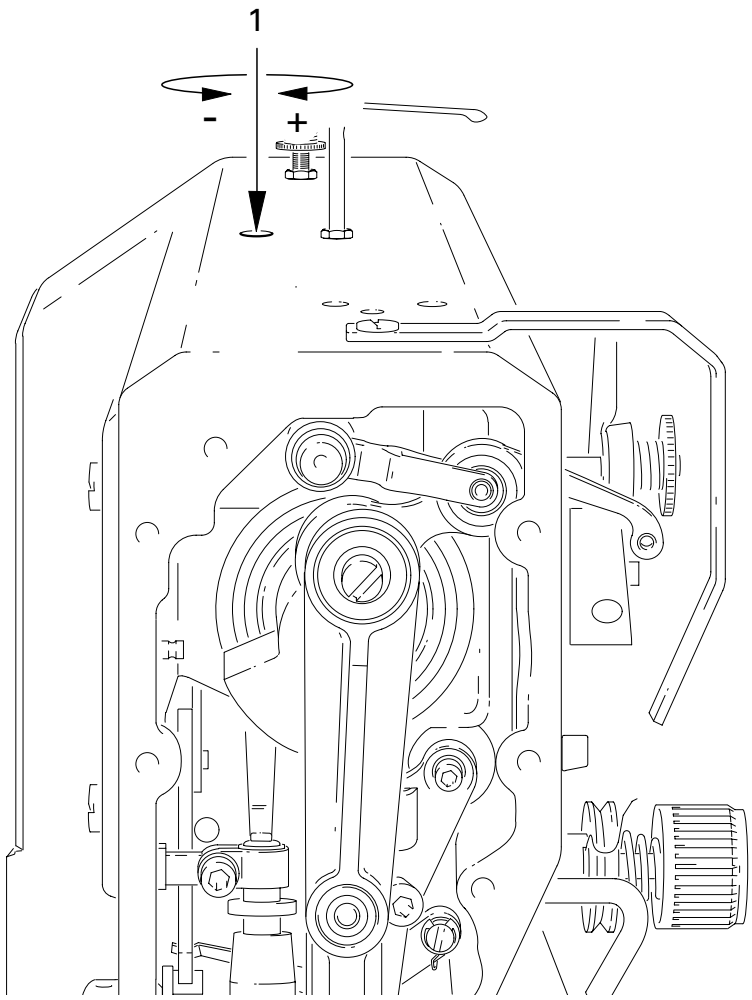

Fig. 13 - 20

- Turn screw **1** in accordance with the **requirement.**

13.06 Adjusting the thread trimming device -900/24

13.06.01 Adjusting the solenoid / preliminary adjustment of the control cam

Requirement

1. When solenoid **3** is completely extended, roller lever **4** should be at the lowest point of the control cam.
2. When the needle bar is positioned at 1.8 mm after b.d.c. (needle rise position), roller lever **4** should engage in the appropriate recess of the control cam.

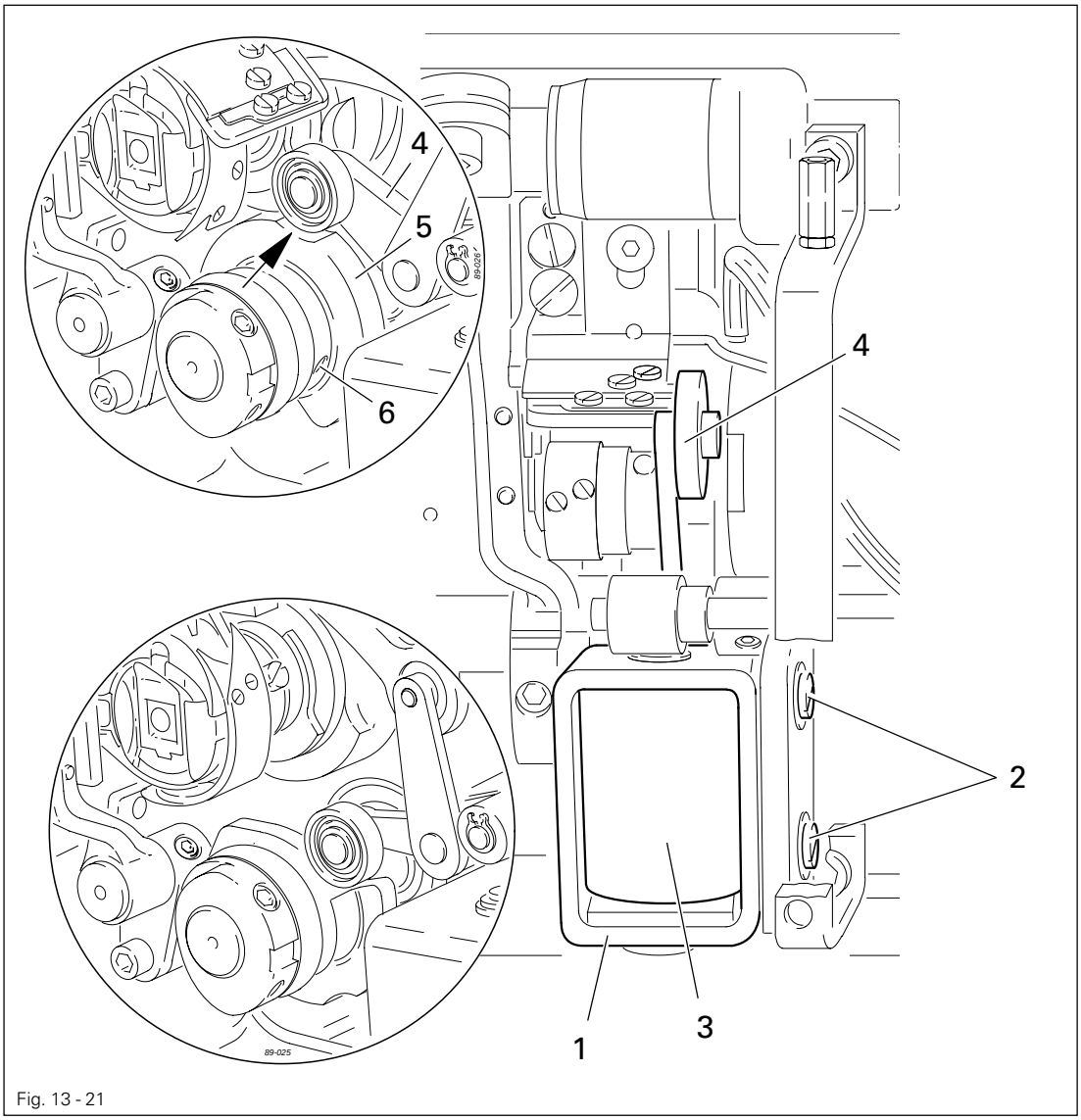

Fig. 13 - 21

- Adjust solenoid holder **1** (screws **2**) in accordance with **requirement 1.**
- Adjust control cam **5** (screws **6**) in accordance with **requirement 2.**

13.06.02 Lateral alignment of the thread catcher

Requirement

1. The tip of the thread catcher **5** must point exactly to the center of the needle.
2. The thread catcher **5** must be horizontal. It must not graze anything when it is operating.

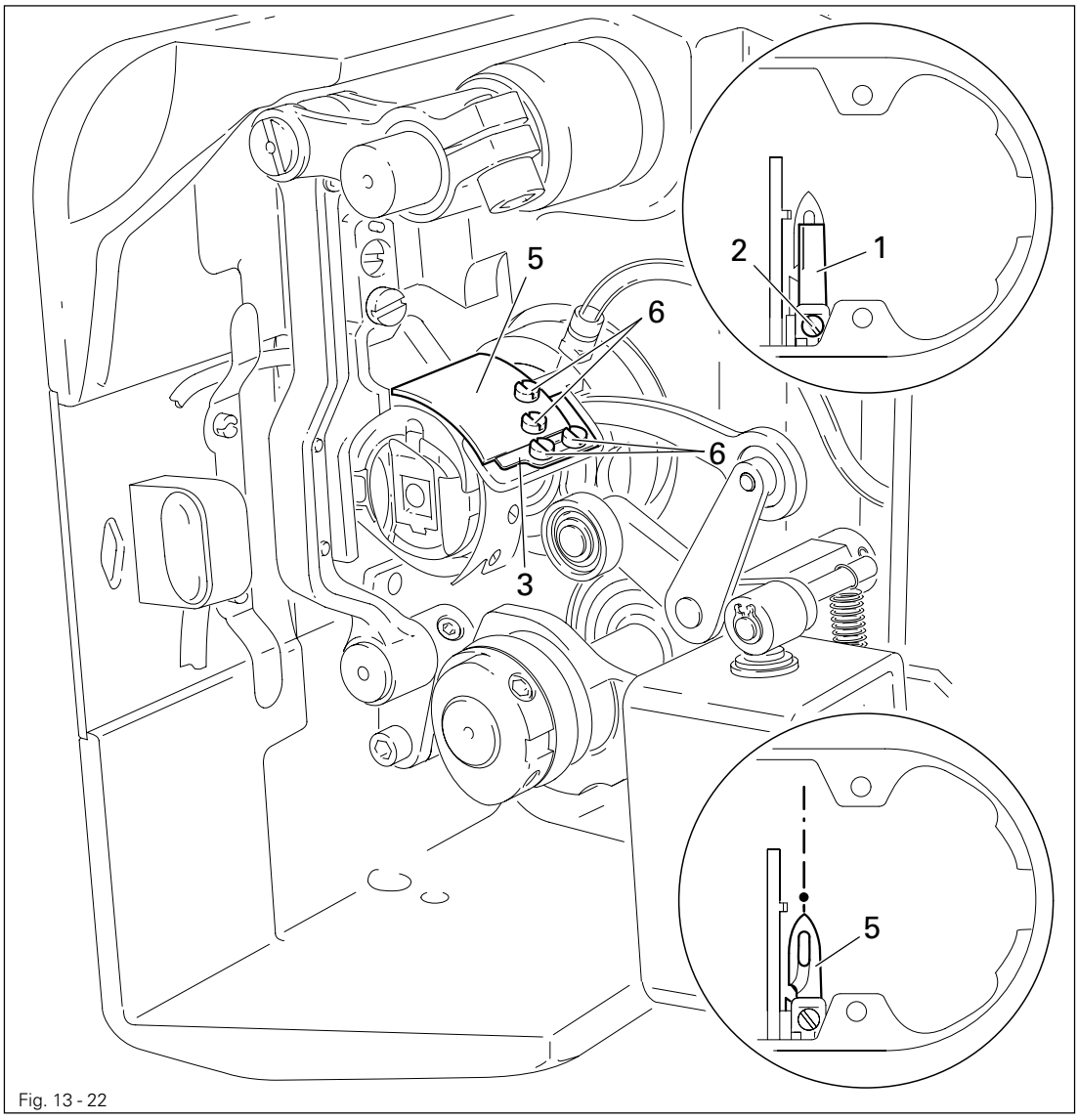

Fig. 13 - 22

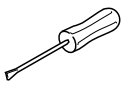

- Remove knife **1** (screw **2**).
- Move needle bar to its BDC.
- Loosen stop **3** (screws **4**).
- Position thread catcher **5** (screw **6**) manually in front of the needle.
- Align thread catcher **5** (screws **7**) according to the **requirements.**

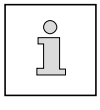

For further adjustments, leave knife **1** removed and stop **3** loosened.

13.06.03 Knife position

Requirement

1. There must be a distance of **4 mm** between the cutting edge of the knife and the needle.
2. The right edge of the knife **1** must not extend beyond the right edge of the thread catcher (see arrow).

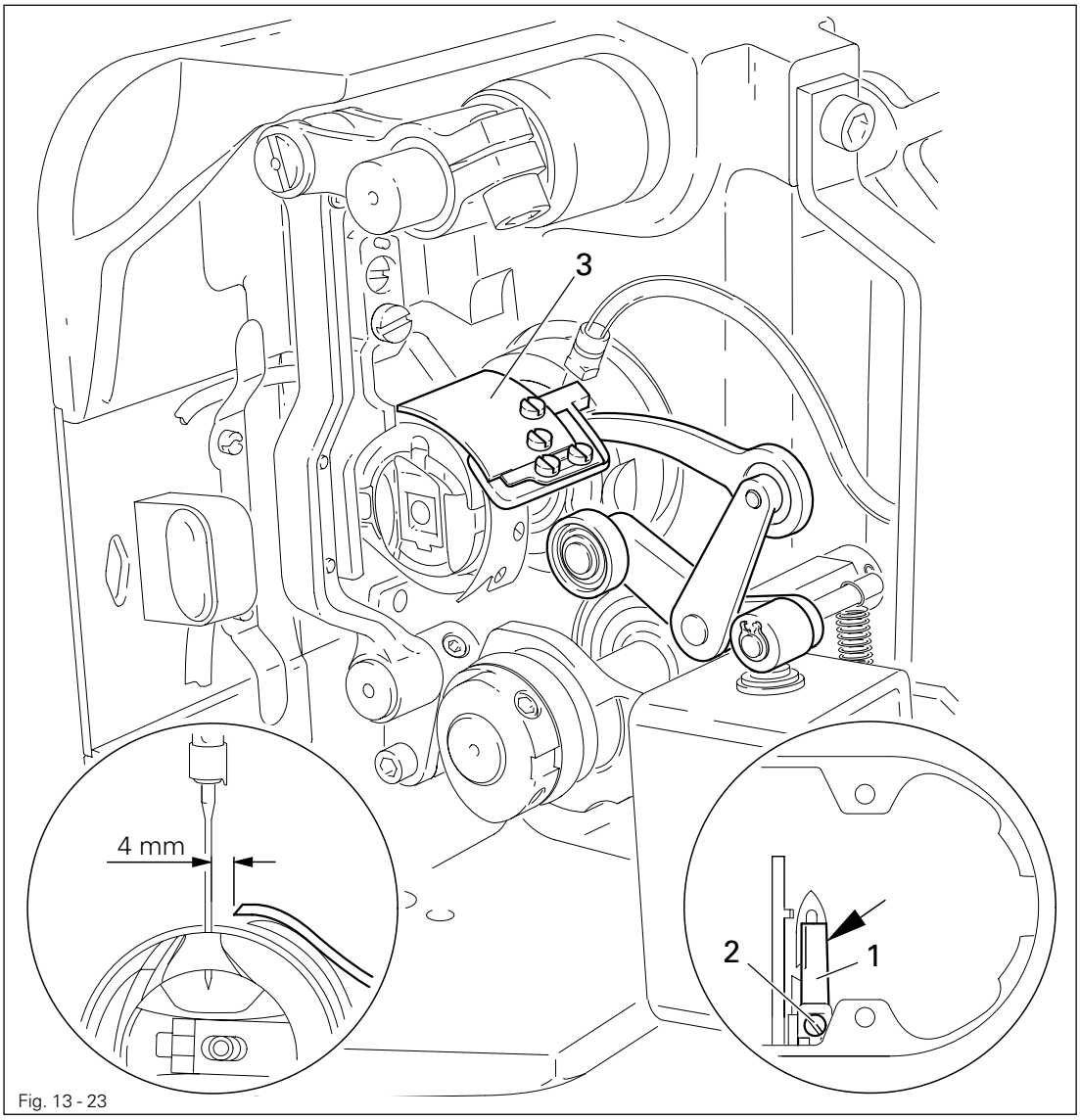

Fig. 13 - 23

- Bring the needle bar to BDC.
- Slide knife **1** under the locking tab and align according to **requirement 1.**
- Tighten screw **2** lightly.
- Adjust thread catcher carrier **3** by hand until the wedge point in the thread catcher is positioned just in front of the cutting edge of the knife.
- Align knife **1** according to **requirement 2** and tighten screw **2**.

13.06.04 Front point of reversal of the thread catcher

Requirement
At the front point of reversal of thread catcher **4**, the tip of the thread catcher cutout should be **1 mm** in front of the bobbin case position finger **5**.

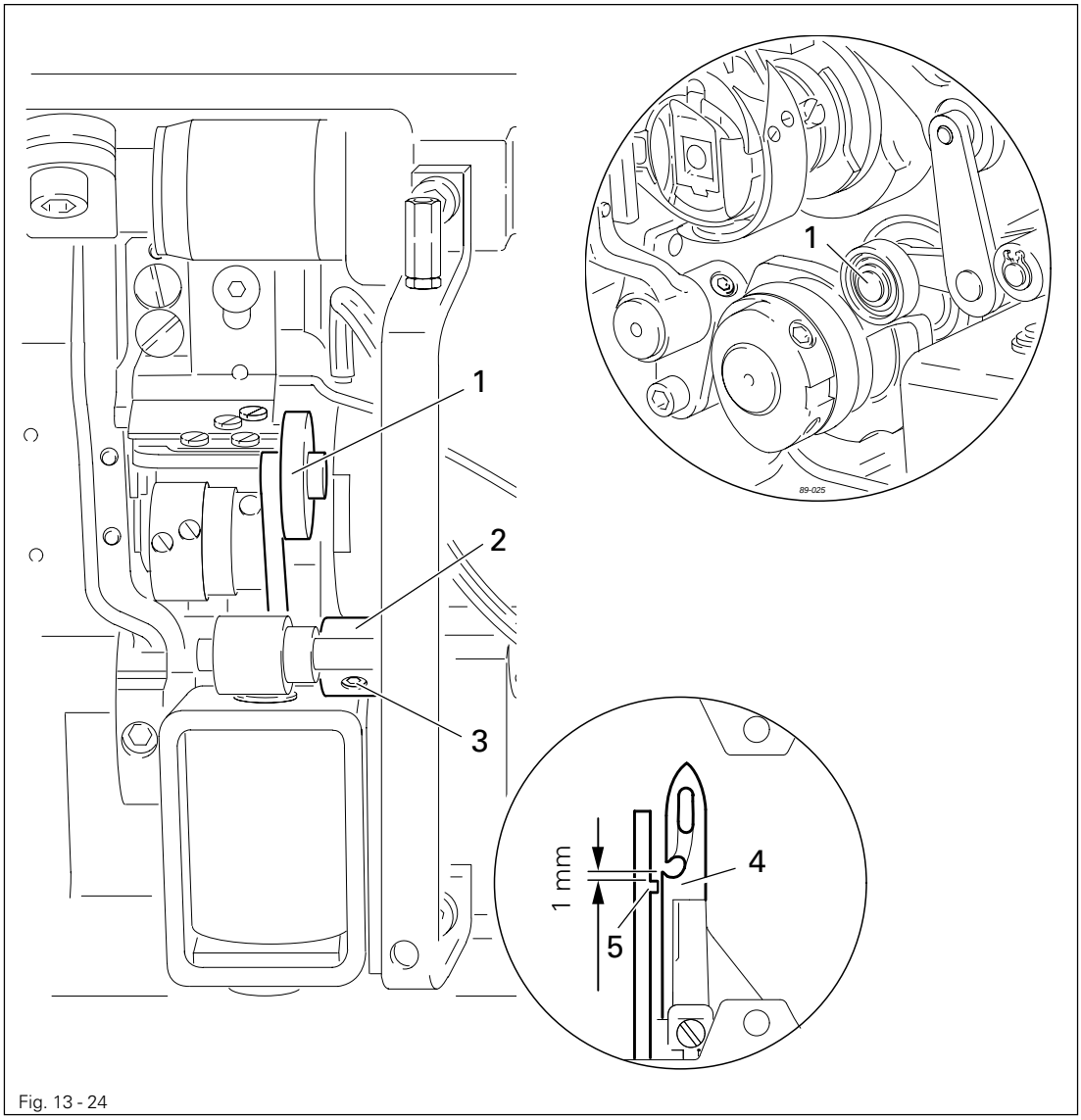

Fig. 13 - 24

- Position roller lever **1** at the lowest point of the control cam.
- Adjust bush **2** (screws **3**) according to the **requirement.**

13.06.05 Manual trimming check

Requirement
Two threads must be cut perfectly both left and right in the cutout of thread catcher **1**.

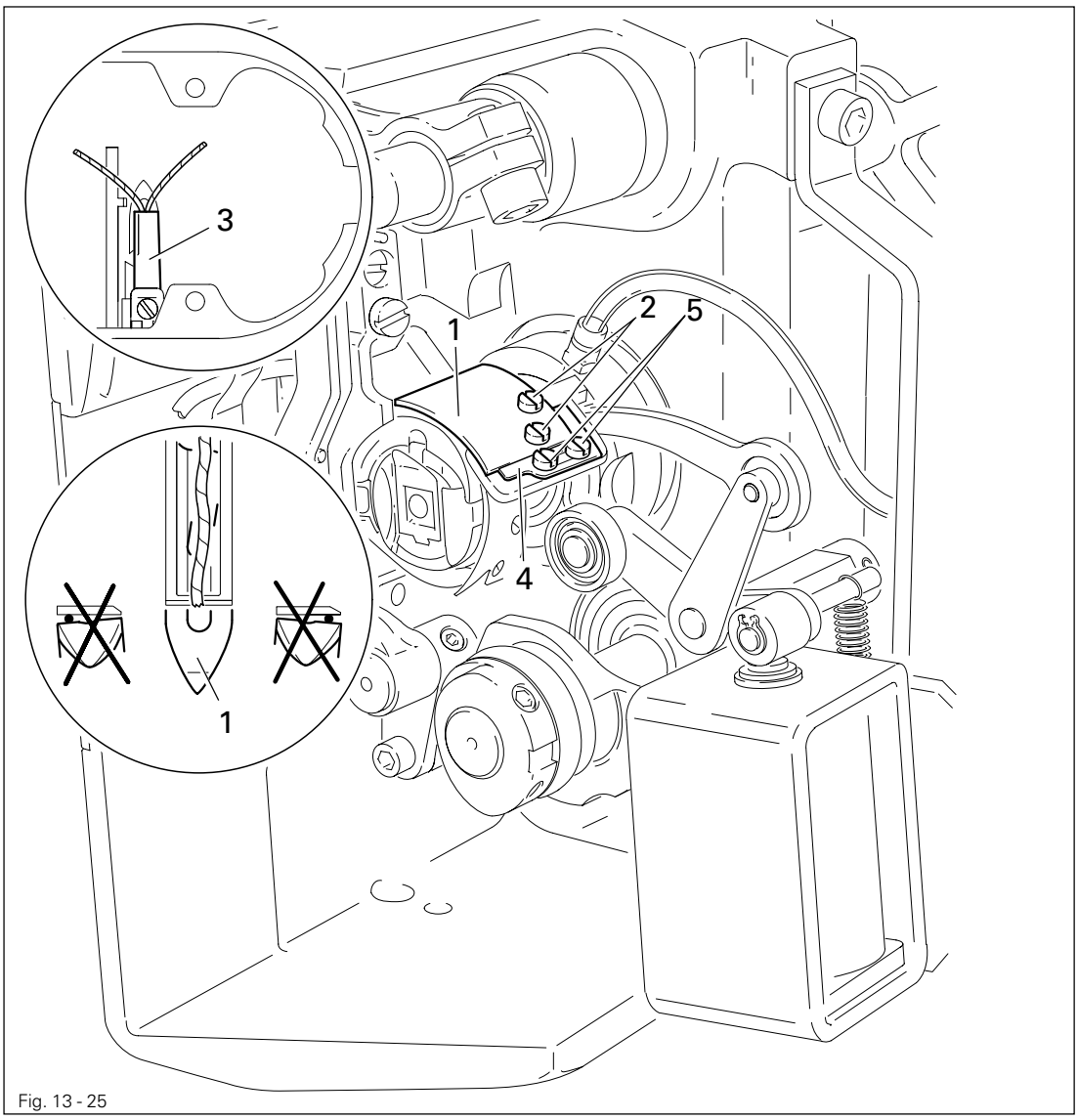

Fig. 13 - 25

- Move thread catcher **1** by hand to its front point of reversal.
- Double the thread and insert into catcher cutout.
- Carry out trimming operation manually.
- If the threads are not cut according to the **requirement**, align thread catcher **1** (screws **2**) with knife **3** accordingly.
- Move stop **4** against thread catcher **1** and tighten screws **5**.
- Check chapter **13.06.02 Lateral alignment of the thread catcher**, and readjust if necessary.

13.06.06 Needle thread tension release

Requirement

1. The solenoid stroke should be **1.5 mm.**
2. When the solenoid **5** is operated by hand, there should be a distance of at least **0.5 mm** between the tension disks 6.

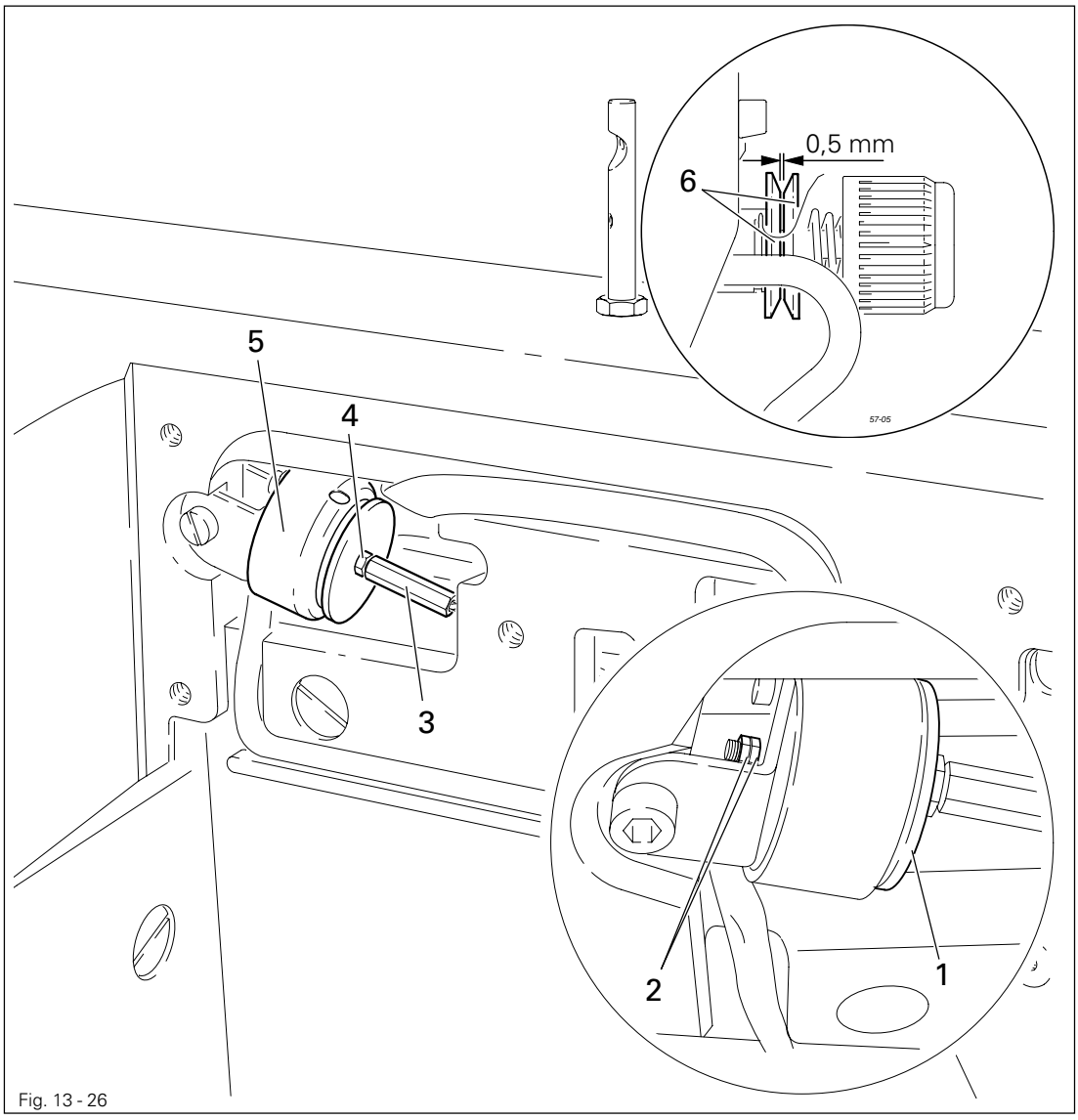

Fig. 13 - 26

- Adjust disk **1** (nuts **2**) in accordance with **requirement 1.**
- Adjust screw **3** (nut **4**) in accordance with **requirement 2.**

13.06.07 Readjusting the control cam

Requirement
When the take-up lever is in its t.d.c., control cam **1** should have moved thread catcher **3**.

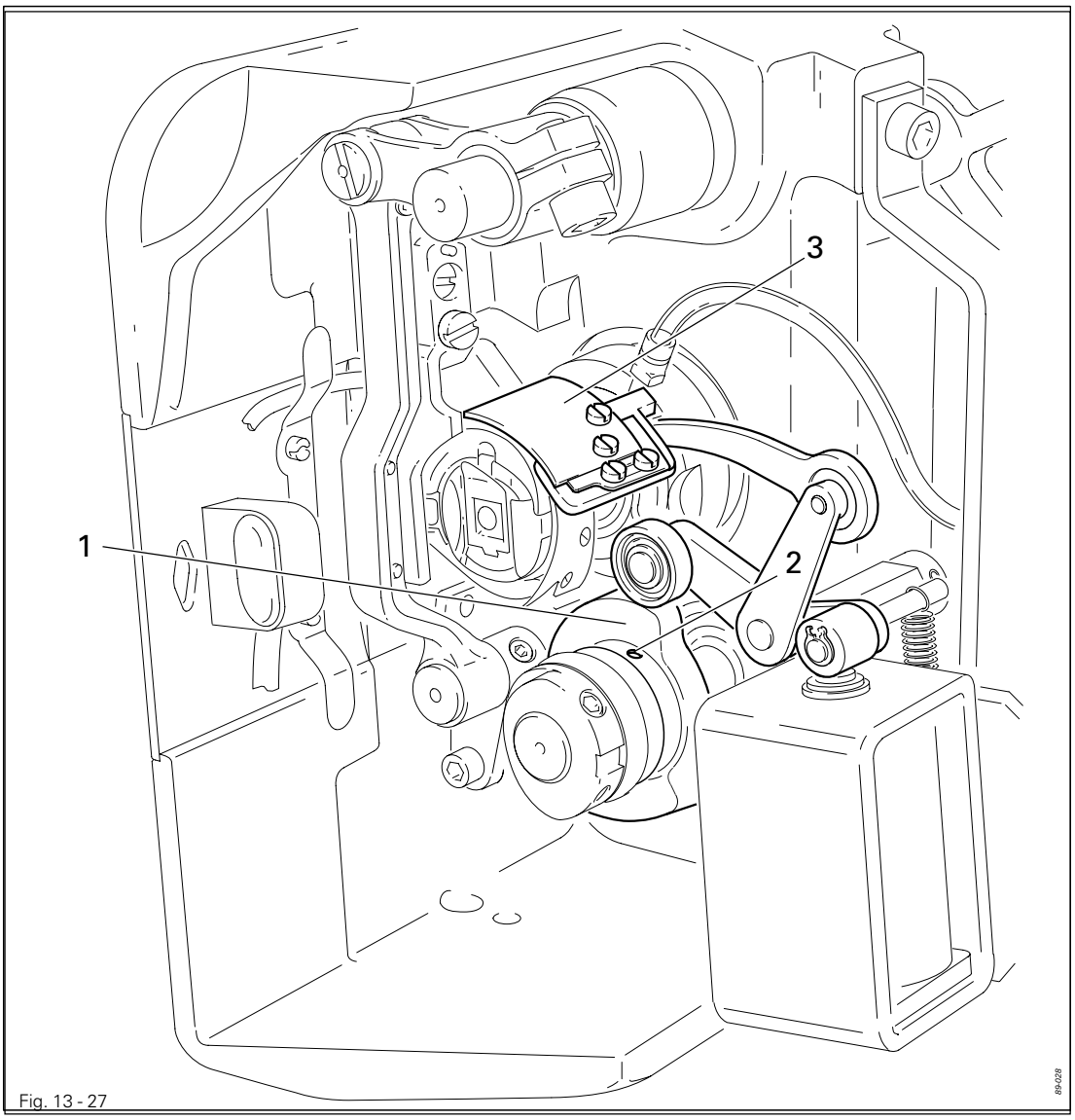

Fig. 13 - 27

- Adjust control cam **1** (screws **2**) according to the **requirement.**

13.07 Aligning the light transmitter

Requirement
When the workpiece is positioned, the transmitters PS2 and PS1 should display the same value (same receiving power).

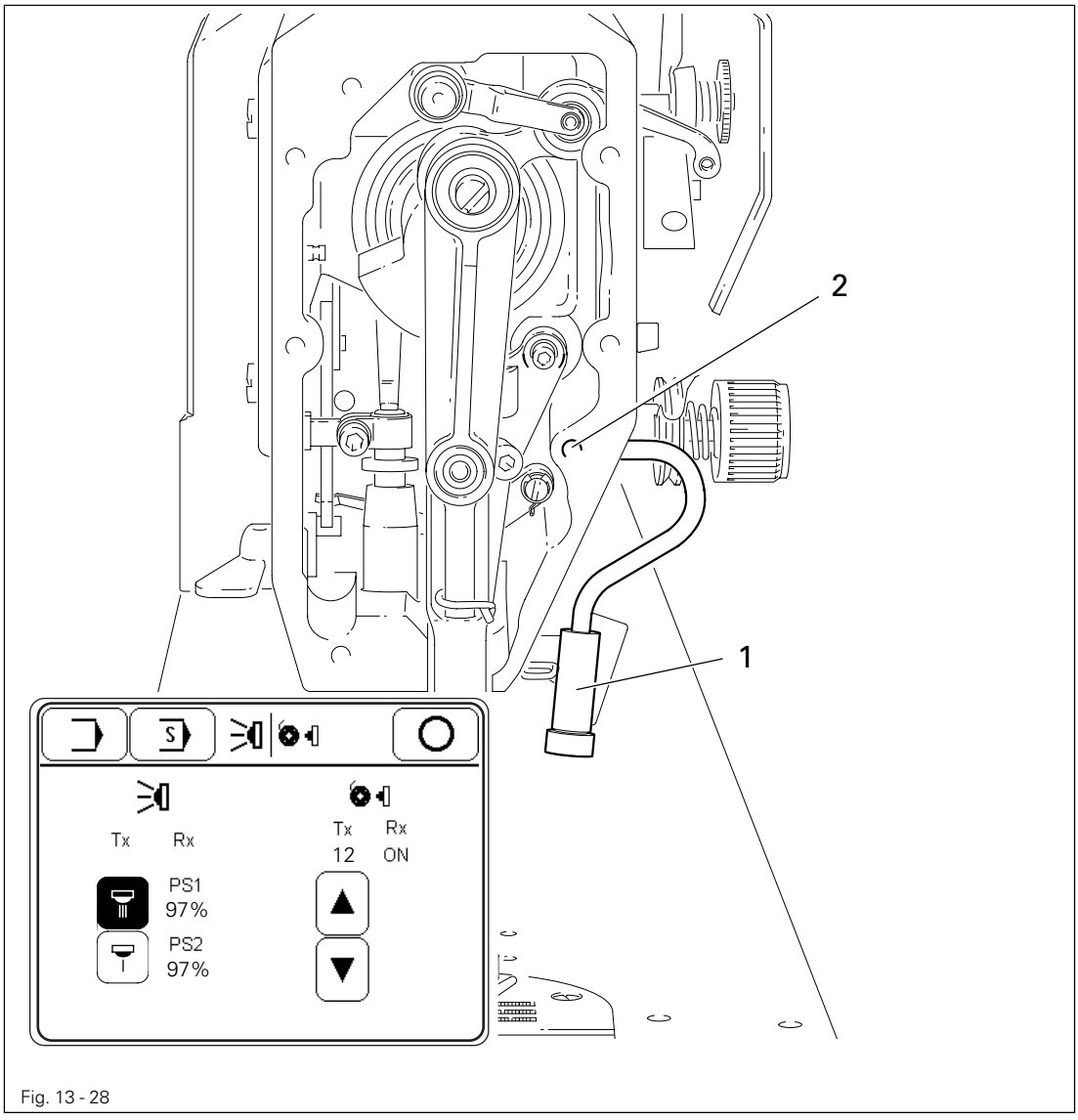

Fig. 13 - 28

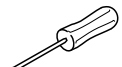

- Switch on the machine.

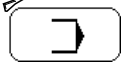

- Call up the input mode.



- Call up the service menu.

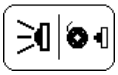

- Call up the sensor menu.

- Adjust light transmitter 1 (screw 2) in accordance with the requirement.
- Switch off the machine.

13.08 Adjustment of the transmitted light sensors

Requirement
The difference between one and several material plies should be recognised.

- Switch on the machine.

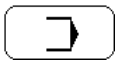

- Call up the input mode.

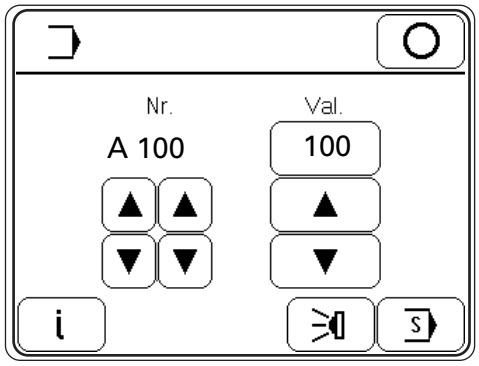



- Call up the menu for adjusting the transmitted light sensors.

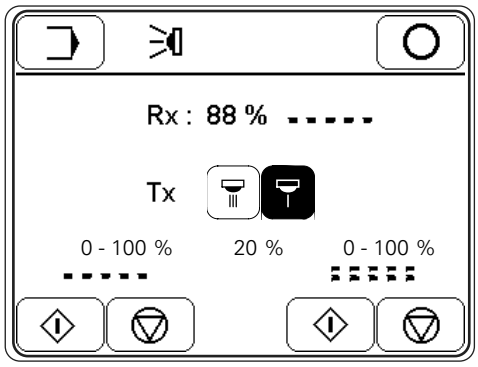

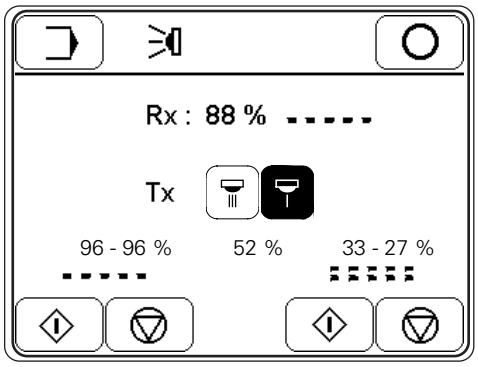

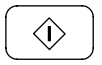

- Start the adjustment without material.

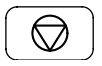

- End the adjustment without material.

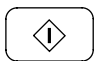

- Start the adjustment with material (e.g. cuff).
- Move the cuff to and fro under the sensors for a short time.

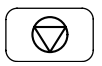

- End the adjustment for with material.



- If necessary, adjust the transmitting power.



- End the adjustment of the transmitted light sensors.

13.09 Function control of the bobbin thread monitor

Requirement
When the thread is pulled, the value under "Rx" must change from "ON" to "OFF" (perfect transmission of the incoming signal of the bobbin thread sensor).

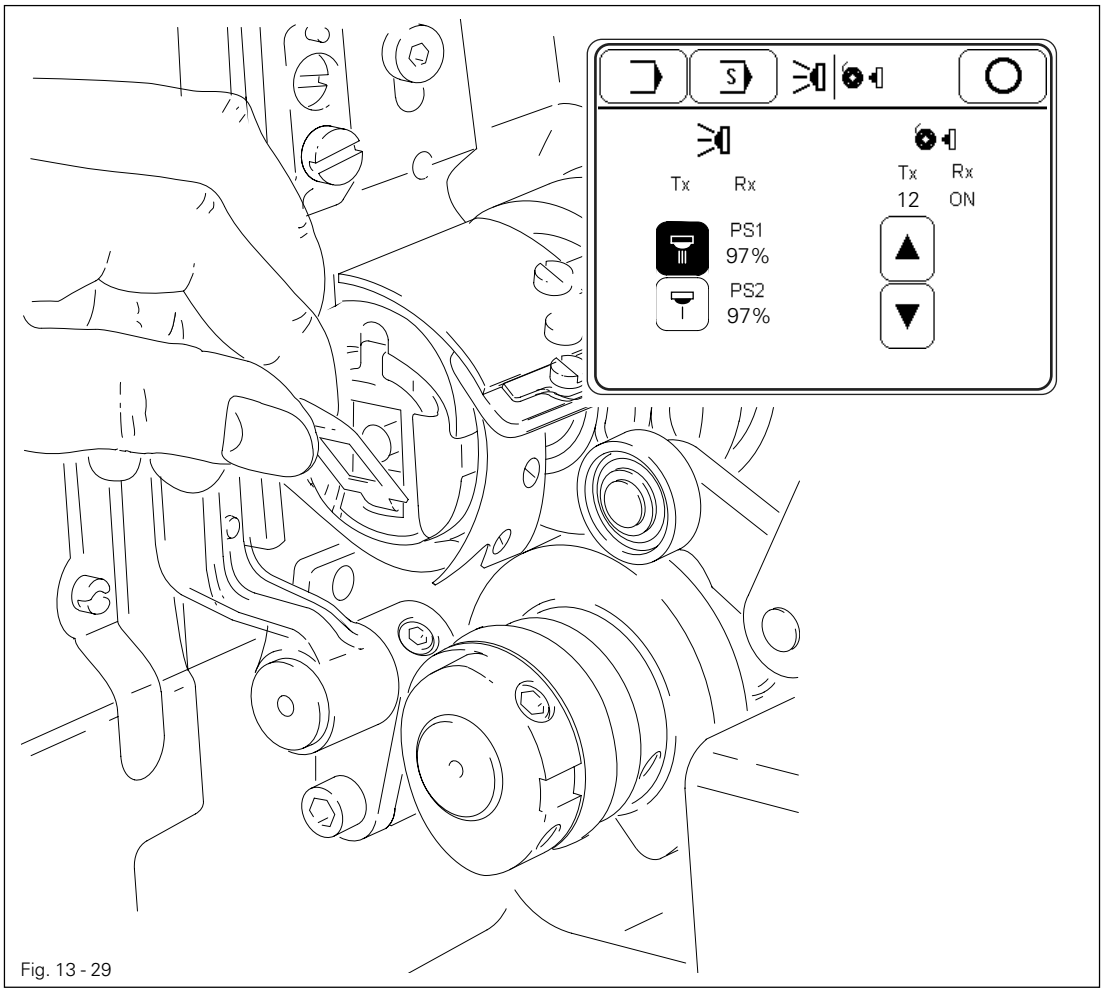

Fig. 13 - 29

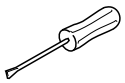

- Place the bobbin in the bobbin case and the bobbin case in the hook.
- Switch on the machine.

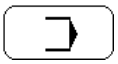

- Call up the input mode.



- Call up the service menu.

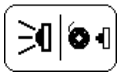

- Call up the sensor menu.
- Pull the thread by hand and check the **requirement.**

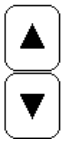

- If necessary, increase or reduce the transmitting power (Tx).
- Switch off the machine.

13.10 Adjusting the electric edge guide

Requirement
When a seam depth of 1.0 mm is selected (using the control panel), guide unit **3** should be at a distance of **approximately 0.1 mm** from sewing foot **4**.

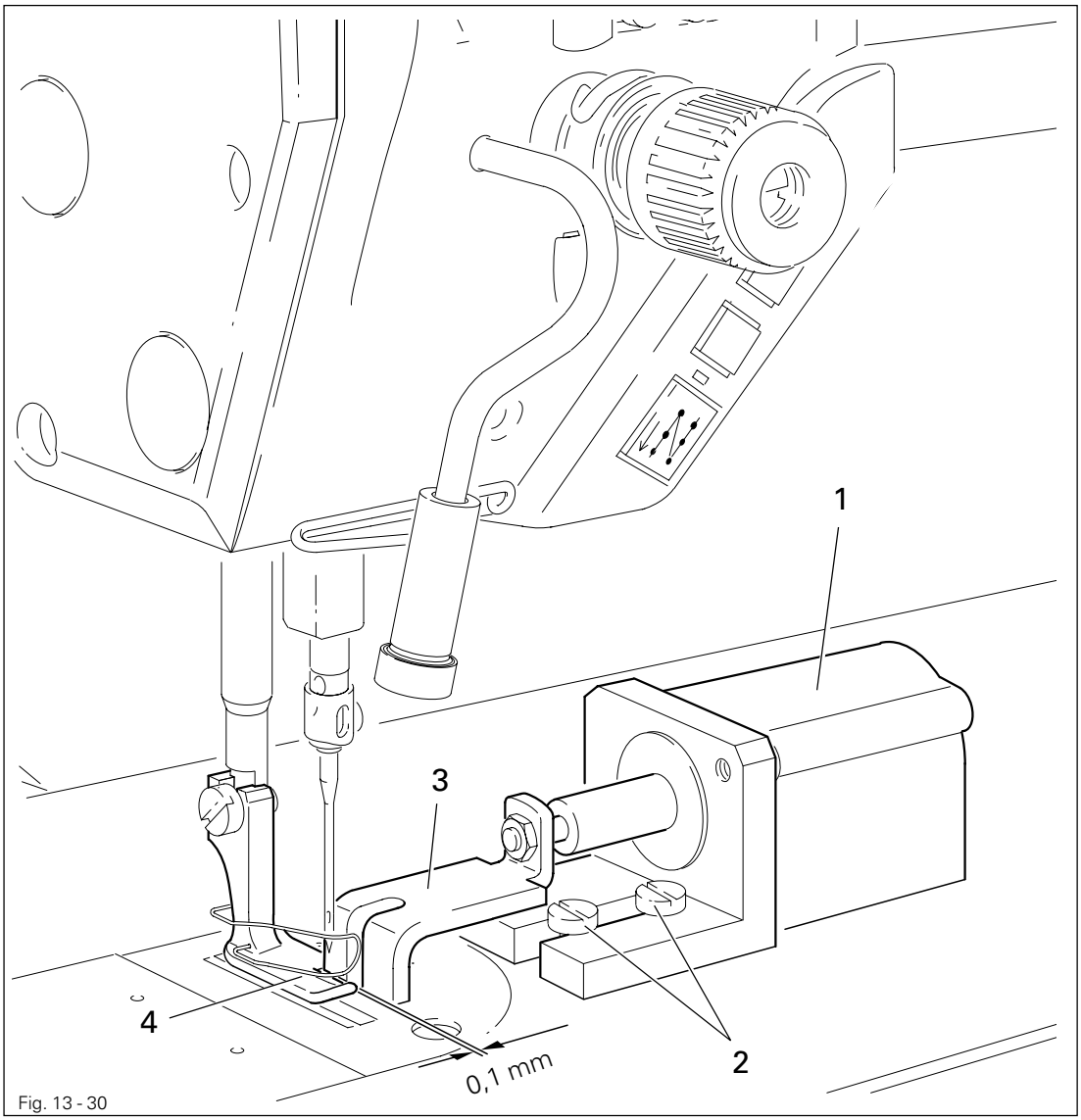

Fig. 13 - 30

- Switch on the machine.
- Set the edge guide position at 1.0 mm, see **Chapter 9.07 Entering the edge guide position.**
- Adjust edge guide **1** (screws **2**) according to the **requirement.**
- Switch off the machine.

13.11 Parameter settings

13.11.01 Example of a parameter input

- Switch on the machine.

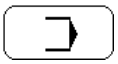

- Call up the input mode.

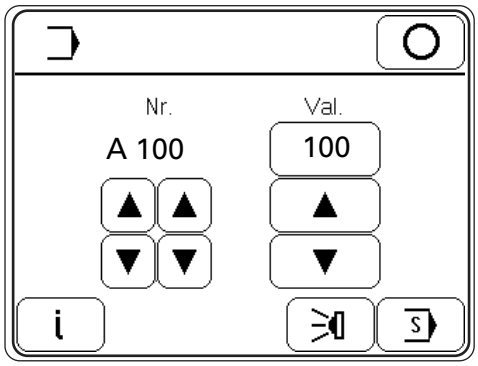

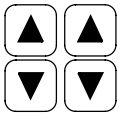

- Select parameter "660" (bobbin thread control).

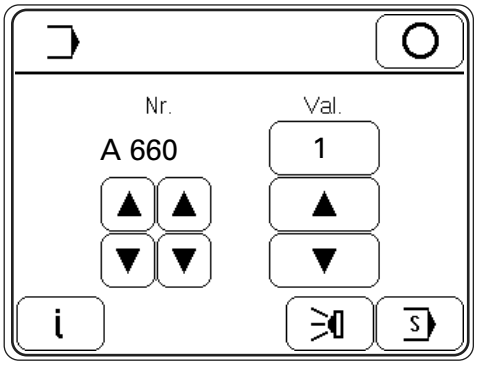

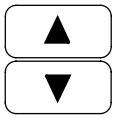

- Switch on the bobbin thread control (value "1").



- Conclude the parameter input.

13.11.02 Selecting the user level

- Switch on the machine.

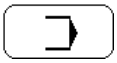

- Call up the input mode.

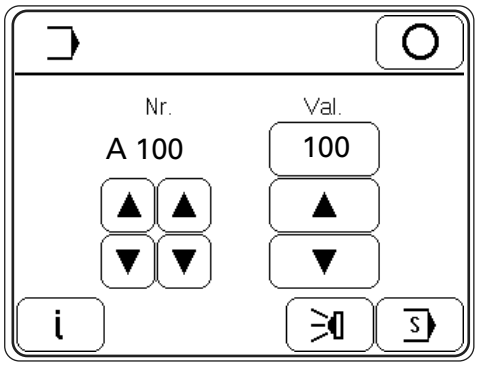

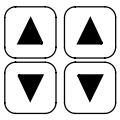

- Call up parameter "798".

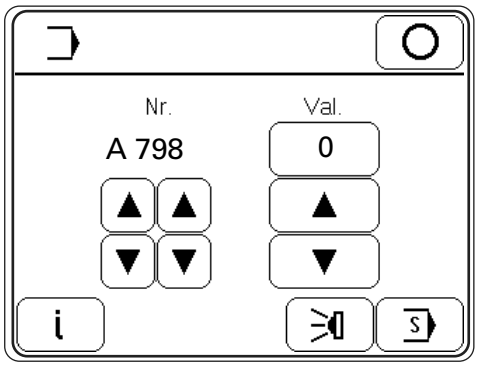

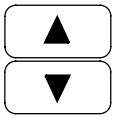

- By selecting the appropriate value for parameter **798**, the user level is determined and shown in the display in front of the current parameter.

  "0" = Operator level A
  "1" = Mechanic level B
  "11" = Service level C



- End the parameter input. The altered values are stored and the controller switches to the sewing mode.

13.11.03 List of parameters

Group	Parameter	Description	User level	Setting range	Set value
0	10	Bobbin thread monitor-current level	C	8 - 16	12
	11	Bobbin thread monitor-stitch counter (starting value)	C	0 - 255	32
1	100	Control panel contrast [%]	A	90 - 110	100
	101	Control panel key response signal 0=tone off/1=tone off/key inverted 2=tone on/3=tone on/key inverted	A	0 - 3	2
	102	Start backtacks forwards	C	0 - 9	3
	103	Start backtacks in reverse	C	0 - 9	3
	105	Start backtacks speed	B	100 - 1500	900
	106	Start backtacks speed ON = pedal-controlled OFF = set with param. "105"	C	ON - OFF	OFF
	107	Pedal-controlled speed start backtacks ON = limited with parameter "105" OFF = limited with parameter "607"	C	ON - OFF	OFF
	108	End backtacks in reverse	C	0 - 9	3
	109	End backtacks forwards	C	0 - 9	3
	110	End backtacks speed	B	100 - 1500	1000
	111	No. of stitches from bright light barrier to seam end in manual sewing	A	1 - 255	6
	113	Start with light barrier ON = only when light barrier is dark OFF = also when light barrier is bright	B	ON - OFF	ON
	114	After light barrier or stitch counting ON = stop OFF = autom. end backtacks and seam end	C	ON - OFF	OFF
	116	Soft start stitches (soft start)	A	0 - 10	1
	117	Speed for soft start stitches	B	180 - 1200	400
	148	Start backtacks ON = double / OFF = single	A	ON - OFF	ON
	149	End backtacks ON = double / OFF = single	A	ON - OFF	ON

Group	Parameter	Description	User level	Setting range	Set value
1	199	Speed for light barrier compensating stitches [min-1]	B	300 - 1500	1200
2	206	Seam interruption with Pedal -2	C	ON - OFF	OFF
	220	Speed level 12 (Poti-reserve) [min-1]	A	300 - 5000	4500
	221	Speed limitation for seam programs [min-1]	B	300 - 5000	4500
	222	Speed constant for seam programs [min-1]	B	300 - 5000	3000
	298	Number of reduced stitches	A	1 - 3	1
	299	Edge guide position in manual sewing [1/10 mm]	A	10 - 185	185
3	323	Edge guide position min [1/10 mm]	B	10 - 50	10
	325	Edge guide position max [1/10 mm]	B	165 - 185	185
4	419	Bartacks: ON = inverted OFF = suppressed	C	ON - OFF	ON
	478	Corner stitch ON = accurate OFF = fast	C	ON - OFF	ON
	492	Number of seam programs	B	1 - 99	99
	493	Number of seam segments per seam program	B	1 - 15	15
5	554	Presser foot after seam segment with pedal forwards: ON = raised / OFF = lowered	C	ON - OFF	ON
	584	Backtack stitches ON = fourfold / OFF = normal	C	ON - OFF	OFF
6	601	Cutting:	C	ON - OFF	ON
	602	ON = Cutting with pedal -1 OFF = Cutting with pedal -2	C	ON - OFF	OFF
	603	ON = Pedal stops after cutting OFF = immediate start after end of seam	C	ON - OFF	ON
	604	Cutting: ON = forwards after semi end backtack OFF = in reverse too	C	ON - OFF	ON
	605	Speed display	B	ON - OFF	OFF

Group	Parameter	Description	User level	Setting range	Set value
6	606	Speed level 1 (min.) [min-1]	B	30 - 550	180
	607	Speed level 12 (max.) [min-1]	B	300 - 5000	4500
	609	Cutting speed [min-1]	B	60 - 500	180
	618	Reversing angle	C	ON - OFF	OFF
	624	Start inhibitor:	C	ON - OFF	ON
	642	Presser foot – time from switch-on to tension reduction (tacting)	C	10 - 50	50
	651	Automatic lowering of presser foot	C	ON - OFF	ON
	660	Bobbin thread monitoring 0 = off 1 = on 2 = bobbin thread reverse counter on	A	0 - 2	1
	668	Thread wiper = 1, Thread clamp = 2, off = 0	B	0 - 2	2
7	700	Logical zero mark [increments]	B	0 - 127	0
	702	Needle position (needle lowered)	B	0 - 30	15
	703	Needle position (take-up lever raised)	B	100 - 127	113
	705	Needle position (end of cutting signal)	B	80 - 127	98
	706	Needle position (start of cutting signal)	B	40 - 80	68
	707	Needle position (start thread tension release)	B	40 - 80	70
	710	Needle position (needle raised without cutting)	B	80 - 127	106
	715	Operating time thread wiper [ms]	B	0 - 2550	120
	718	Moment of standstill brake (rest brake)	B	0 - 100	0
	719	Presser foot-holding current	B	0 - 50	40
	720	Cutting–holding current	B	0 - 50	40
	721	Feed converter-holding current	C	0 - 50	40
	722	Acceleration ramp: 1 = flat, 50 = steep	C	1 - 50	50
	723	Brake ramp: 1 = flat, 50 = steep	C	4 - 50	50

Group	Parameter	Description	User level	Setting range	Set value
7	729	Start delay after lowering presser foot [ms]	B	0 - 2550	120
	730	Lift delay for presser foot after seam end [ms]	B	0 - 2550	0
	731	Stitch count delay for end backtack	C	0 - 2550	70
	732	Delay time for cutting after single end backtack [ms]	C	0 - 2550	30
	733	Delay time from switch on feed conversion to speed start [ms]	C	0 - 200	30
	739	Delay time for speed after start backtack or stitch condensation [ms]	C	0 - 2550	200
	740	Stitch count delay for end backtack [ms]	C	0 - 2550	60
	760	Stitch count to bobbin thread monitor (machine stop in needle lowered position)	A	0 - 50000	1000
	761	Extension thread tension release/pull thread [ms]	B	0 - 2550	0
	791	Stitch count delay for start backtack [ms]	C	0 - 2550	30
	797	Hardware test	B	ON - OFF	OFF
	798	User level 0 = user level A 1 = mechanic level C 11 = service level C	A	0 - 11	0
	799	Selected machine class 1 = 2481-980 2 = 2483-980 3 = 2438-980 4 = 2481-906	C	1 - 4	1
	800	Motor rotating direction when looking at V-Celt pulley 1= anti-clockwise, 0 = clockwise	C	ON - OFF	ON
8	801	Reversing angle (618 = ON)	C	5 - 106	16
	831	Start delay for stepping motor 2 [increments]	B	0 - 10	5
	832	Needle position (feed start)	B	0 - 127	15
	833	Needle position (feed end)	B	0 - 127	67

Group	Parameter	Description	User level	Setting range	Set value
8	834	Feed regulator-balance [1 semi-step = 5/100mm]	B	-5 - 5	0
	835	Reduced single stitch [%]	A	0 - 100	50
	843	Distance sensor 1 to sensor 2 [1/10mm]	B	75 - 85	80
	844	Distance sensor 1 to needle [2/10mm]	B	80 - 300	200
	845	Speed-controlled stitch length adjustment [% pro 1000 min-1]	B	0 - 3	1
	846	Feed regulator characteristic line adjustment for forward stitch length [%]	A	80 - 110	▲
	847	Feed regulator characteristic line adjustment for reverse stitch length [%]	A	80 - 110	▲
	849	Maximum stitch length [1/10 mm]	A	0 - 60	25
	862	Current for stepping motor axis 1	A	16 - 63	32
	863	Current for current reduction of stepping motor axis 1	A	8 - 63	32
	864	Proportional amplification of the speed control (general)	B	0 - 2500	20
	880	Starting current main drive	C	1 - 10	8
	881	Filter parameter for position controller	C	0 - 12	5
	884	Proportional amplification of the speed control (general)	C	1 - 50	25
	885	Integral amplification of the speed control	C	1 - 50	35
	886	Proportional amplification of the position controller	C	1 - 50	30
	887	Differential amplification of the position controller	C	1 - 50	30
	889	Time for position control (0 = permanently)	C	0 - 2550	200
	890	Proportional amplification of higher ranking speed controller for standstill brake (rest brake)	C	1 - 50	25
	891	Proportional amplification of subordinate speed controller for standstill brake (rest brake)	C	1 - 50	20

▲ = By the factory adjusted

Group	Parameter	Description	User level	Setting range	Set value
9	901	Cutting release-speed	C	180 - 500	400
	956	Current for stepping motor axis 2	B	30 - 63	56
	957	Current for current reduction of stepping motor axis 2	B	15 - 48	39
	958	Current reduction time stepping motor axis 2	B	0 - 2500	2000
	978	Delay power off stepping motor 2	C	0 - 99	0
	979	Delay power off stepping motor 1	C	0 - 99	0
	985	Position for thread clamp on	B	0 - 127	34
	986	Position for thread clamp off	B	0 - 127	103

13.12 Explanation of the error messages

Message	Description
E001	Pedal not in neutral position
E003	SM 1 (for reference)
E004	SM 2 (for reference)
E009	Start inhibitor at standstill
E010	Incorrect machine class
E040	Transmitted light sensors
E045	Bobbin thread monitoring
E062	Short circuit 24V
E063	Overload switch power supply
E064	Network monitoring
E065	Extint low in operation
E066	Short circuit
E067	Power off
E068	Extint low in operation
E069	No increments
E070	Motor blocking
E071	No incremental connector
E072	No set value connector
E073	Motor running interrupted
E075	Controller locked
E092	Start inhibitor when motor running
E151	System
E155	Sewing motor
E156	Time out communication
E157	Stepping motor ramps

Message	Description
E158	Stepping motor frequency
E170	Incorrect main drive transmission
E171	Logical zero mark invalid
E172	Communication error main drive
E175	Main drive start
E200	Brake path too short
E201	Main drive position
E222	Time-out monitoring

13.13 Service menu

In the service menu information is displayed about the machine's inputs and outputs, the values of both pedals and the balance wheel position.
In addition the following functions can also be carried out.

- Switch on the machine.



- Call up the input mode.



- Call up the service menu.

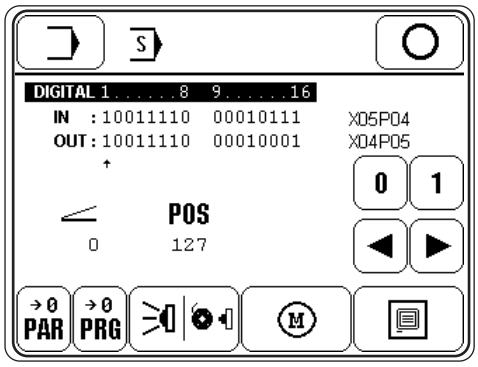

Description of the functions



Input mode
Quit the service menu and call up the input mode.



Sewing mode
Quit the service menu and call up the sewing mode.

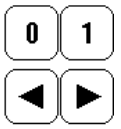

Set/reset outputs
Using the arrow functions select the desired output and set "function 1" or reset "function 2".



Parameter reset
All parameters are reset to the default values.



Program reset
All programs are reset to the default values.

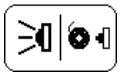

Sensor menu
After this function has been called up, the transmitted light sensors and the bobbin thread monitor sensors can be set.

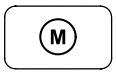

Motors
After this function has been called up, the stepping motors for the feed band , the feed wheel and the sewing motor can be moved.



Control panel
See **Chapter 9.12 Adjusting the control panel.**

Plug assignment

CAN

Pin-No.	Comment	Function	Plug marking	Signal marking
X11A.2	CAN	CAN-	CAN_HIGH	CAN_TxD
X11A.3	CAN			Gnd
X11A.7	CAN	CAN+	CAN_LOW	CAN_RxD

Set value transmitters

Pin-No.	Comment	Function	Plug marking	Signal marking
X11B.4	pedal			+5V
X11B.5	pedal			+5V
X11B.6	pedal			Gnd
X11B.7	pedal 2	set value		SW2 (analog)
X11B.8	pedal 1	set value		SW1 (analog)
X11B.9	pedal			Gnd

Sensors

Pin-No.	Comment	Function	Plug marking	Signal marking
X15.1	Sensors	current source UFW		P7.3
X15.2	Sensors	DLS outside (LS2)		P5.3 (analog)
X15.3	Sensors	DLS inside (LS1)		P5.6 (analog)
X15.4	Sensors	ZZ-Sensor 2438	E9	E9/Port_E9
X15.5	Sensors	current source DLS	A10/PortA10	O10
X15.6	Sensors		+5V	+5V
X15.7	Sensors	UFW-Out		UFW_MESS
X15.8	Sensors		+24V	+24V
X15.9	Sensors		0V	0V

RS232

Pin-No.	Comment	Function	Plug marking	Signal marking
X1A.1	BDF-S2/T1		+24V	+24V
X1A.2	BDF-S2/T1		RxD	RxD
X1A.3	BDF-S2/T1		TxD	TxD
X1A.4	BDF-S2/T1		+5V	+5V
X1A.5	BDF-S2/T1		Gnd	Gnd
X1A.6	BDF-S2/T1		-	
X1A.7	BDF-S2/T1		RTS	RTS
X1A.8	BDF-S2/T1		CTS	CTS
X1A.9	BDF-S2/T1		Gnd	Gnd

OTE

Pin-No.	Comment	Function	Plug marking	Signal marking
X1B.1	OTE			Gnd
X1B.2	OTE	SSI-Out (TxD)		SSOut
X1B.3	OTE	SSI-Clock		SSClk
X1B.4	OTE			+24V
X1B.5	OTE			+5V
X1B.6	OTE	SSI-strobe (Mode)		SSStr
X1B.7	OTE	SSI-In (RxD)		SSIn
X1B.8	OTE	(light barrier 1)		(LS1)
X1B.9	OTE			

Incremental transmitter

Pin-No.	Comment	Function	Plug marking	Signal marking
X3.1	incr.transm.	track A 256inc./rev.		FA_MINI
X3.2	incr.transm.	track B 256inc./rev.		FB_MINI
X3.3	incr.transm.	SyMa 360°/256		
X3.4	incr.transm.	Autodetect		ADTC
X3.5	incr.transm.			+5V
X3.6	incr.transm.			+5V
X3.7	incr.transm.			Gnd
X3.8	incr.transm.	Ext. SyMa 180°		EXTSM_MINI
X3.9	incr.transm.			Gnd

Stepping motor 1 (edge guide)

Pin-No.	Comment	Function	Plug marking	Signal marking
X4B.1	SM1/FSL	phase A.2	A11	
X4B.2	SM1/FSL	phase A.1	A12	
X4B.3	SM1	phase B.2	A21	
X4B.4	SM1	phase B.1	A22	
X4B.5	SM1			
X4B.6	SM1			
X4B.7	SM1	+5V (with 120R ?)		
X4B.8	SM1	reference SM1	SM_REF1	SM_REF1
X4B.9	SM1	Gnd		

Stepping motor 2 (stitch length)

Pin-No.	Comment	Function	Plug marking	Signal marking
X4A.1	SM2	Phase A.2	B11	
X4A.2	SM2	Phase A.1	B12	
X4A.3	SM2	Phase B.2	B21	
X4A.4	SM2	Phase B.1	B22	
X4A.5	SM2			
X4A.6	SM2			
X4A.7	SM2	+5V (with 120R ?)		
X4A.8	SM2	reference SM2	SM_REF2	SM_REF2
X4A.9	SM2	Gnd		

Outputs

Pin-No.	Comment	Function	Plug marking	Signal marking
X13.01	PWM	FSL-solenoid(Y8)	A1	O1.1
X13.02		FSL-solenoid(Y8+)	A1	O1.2
X13.03	PWM	PFH-solenoid(Y4)	A2	O2.1
X13.04		PFH-solenoid(Y4+)	A2	O2.2
X13.05		WI-solenoid(Y3)	A3	O3
X13.06	PWM	SN-solenoid(Y2)	A4	O4
X13.07			A5	O5
X13.08		RAFI-LED(H1)	A6	O6
X13.09			A7	O7
X13.10			A8	O8
X13.11			A9	O9
X13.12	(from DX)	current source DLS	A10/PortA10	O10
X13.13			A11	O11
X13.14			+24V	+24V
X13.15			+24V	+24V
X13.16			A14	O14
X13.17			A15	O15
X13.18			A16	O16
X13.19		SN-solenoid(Y2+)	+24V	+24V
X13.20		WI-solenoid(Y3+)	+24V	+24V
X13.21			+24V	+24V
X13.22		RAFI-LED(H1+)	+24V	+24V
X13.23			+24V	+24V
X13.24			A13	O13
X13.25			A12	O12

Inputs

Pin-No.	Comment	Function	Plug marking	Signal marking
X5.01		TUM-key(S1)	E1	E7
X5.02		NPW-key(S2)	E2	E8
X5.03		EST-key(S2)	E3	E2
X5.04		ANLSP-switch(S14)	E4	E4
X5.05		EST-knee switch(S13)	E5	E5
X5.06		knee switch2	E15	E15
X5.07			E16	E16
X5.08			E14	E14
X5.09	(from DX)	ZZ-Sensor 2438	E9	E9/Port_E9
X5.10			E10	E10
X5.11			E11	E11
X5.12			E12	E12
X5.13			E13	E13
X5.14			E6	E6
X5.15			E7	E1
X5.16			E8	E3
X5.17		S1-S2-S3(Gnd)	0V	0V
X5.18			0V	0V
X5.19		ANLSP-switch(Gnd)	0V	0V
X5.20		EST-knee switch(Gnd)	0V	0V
X5.21			0V	0V
X5.22			0V	0V
X5.23			+24V	+24V
X5.24			A16	output_A16
X5.25			+24V	+24V

13.14 Internet update of the machine software

The machine software can be updated with PFAFF flash programming. For this purpose the PFP boot program and the appropriate control software for the machine type must be installed on a PC. To transfer the data to the machine, the PC and the machine control unit must be connected with an appropriate null modem cable (part no. 91-291 998-91).

The PFP boot program and the control software of the machine type can be downloaded from the PFAFF-homepage using the following path:
www.pfaff-industrial.com/de/service/download/steuerungssoftware.html

To update the machine software carry out the following steps:

While the machine software is being updated, no setting up, maintenance or adjustment work may be carried out on the machine!

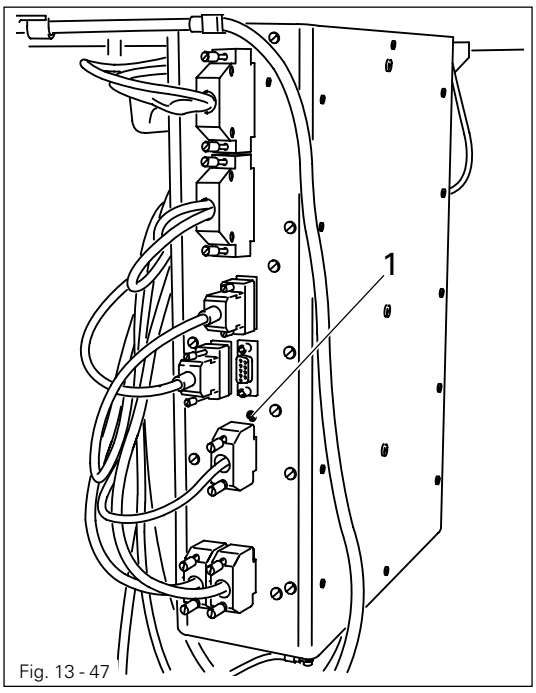

Fig. 13 - 47

- Switch off the machine.
- Connect the PC (serial interface or appropriate USB-adapter) and the machine control unit (RS232). To do so disconnect the plug of the control panel.
- Switch on the PC and start the PFP boot program.
- Select the machine type.
- Press the "programming" button.
- Hold down boot key **1** and switch on the machine.
- Press the "OK" button.

- The software update is carried out, the update progress is shown on the bar display of thePFP boot program.
- During the up-dating procedure the machine must not be switched off.
- When the update has been completed, switch off the machine and end the PFP boot program.
- End the connection between the PC and the machine control unit and reconnect the control panel to the machine control unit.
- Switch on the machine.
  A plausibility control is carried out and, if necessary, a cold start.

More information and assistance is at your disposal in the file "PFPHILFE.TXT", which can be called up from the PFP boot program by pressing the "help" button.

14 Wearing parts

This list indicates the most important wearing parts.
You can request a detailed parts list for the complete machine under parts number 296-12-18 760.

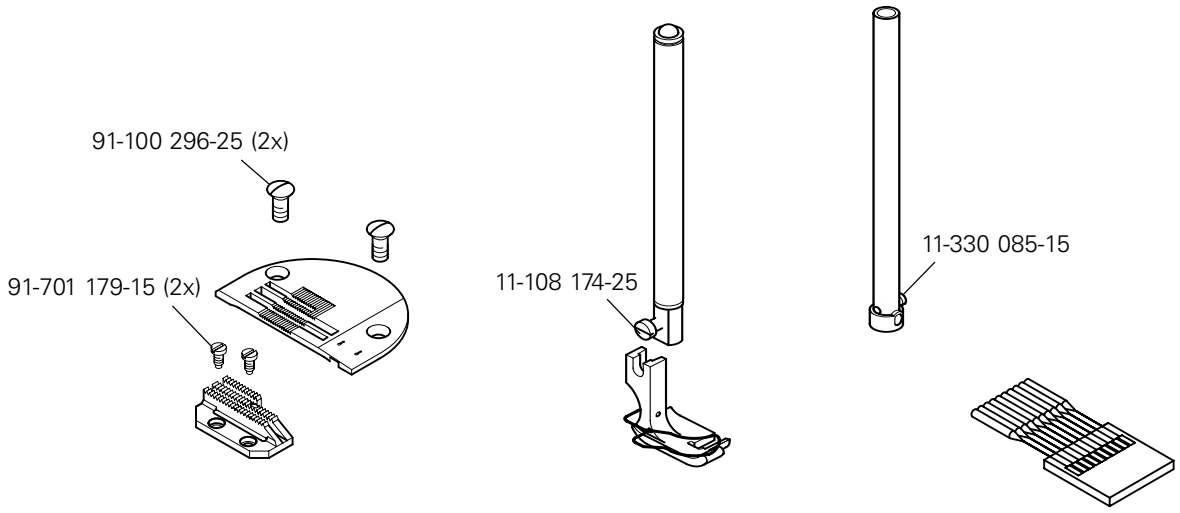

System 134 KK

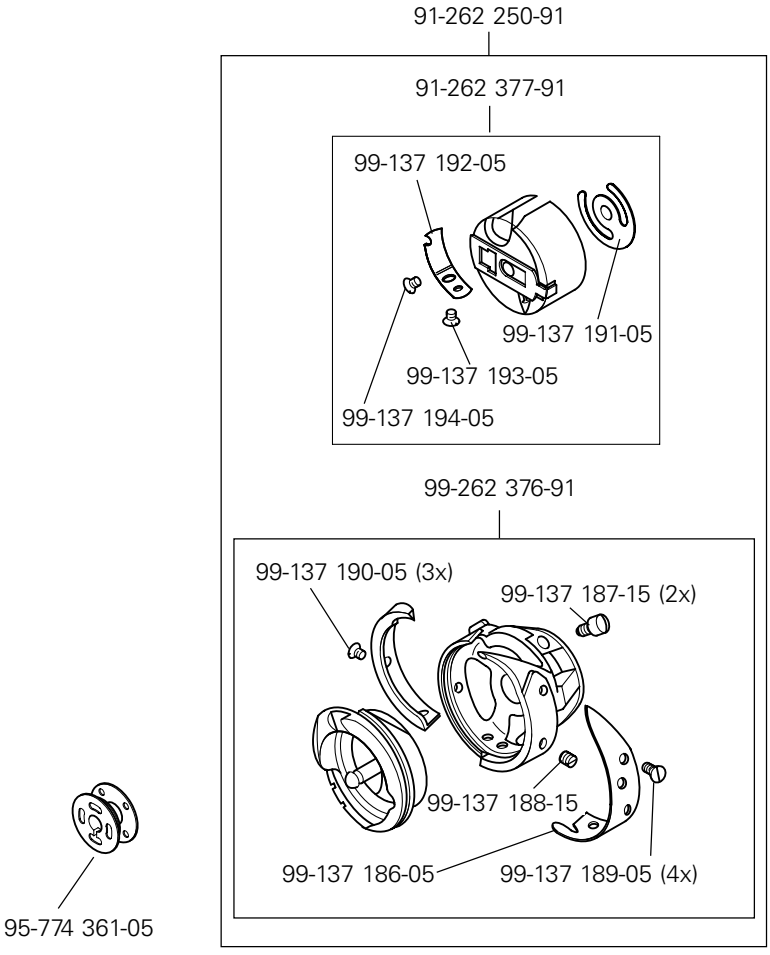

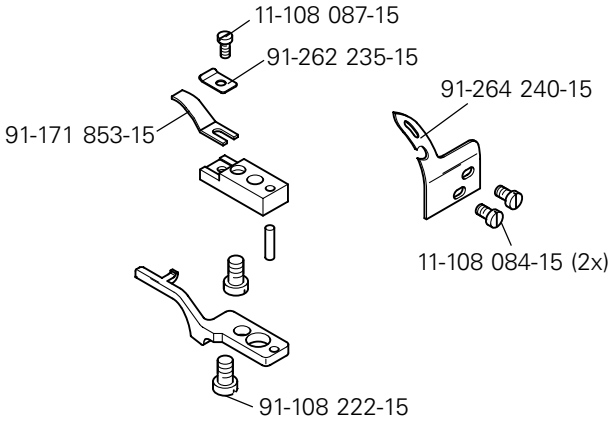
11-108 087-15
91-262 235-15
91-264 240-15
91-171 853-15
11-108 084-15 (2x)
91-108 222-15

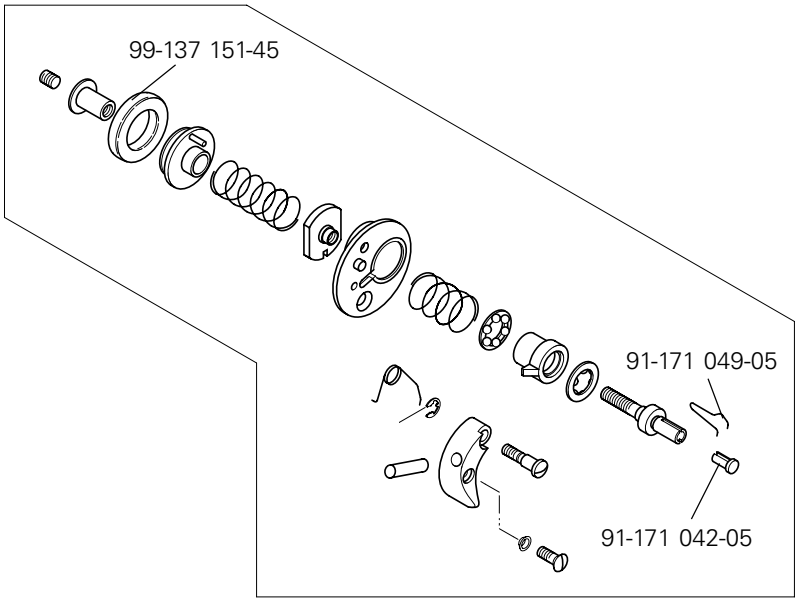
99-137 151-45
91-171 049-05
91-171 042-05

15 Circuit diagrams

Reference list for circuit diagrams

A1	Controller Quick P322MS
A2	Control panel BDF T1
A3	Incremental transmitter (included in M1)
A4	Keyboard
A11	Light transmitter
A12	Light receiver
or	
A12	Light receiver
A13	Bobbin thread monitor
A14	Sewing head identification
S1	Set value transmitter
S10	Single stitch (included in A4)
S11	Backtacking by hand (backtack) (included in A4)
S12	Needle position (included in A4)
S13	Knee switch (single stitch)
S14	Start inhibitor
S15	2nd knee switch
H1	Sewing lamp
H10	Bobbin thread alarm (included in A4)
Q1	Main switch
M1	Sewing motor
M10	Stepping motor (feed regulator)
M11	Stepping motor (edge guide)
B10	Hybrid light barrier (included in M10)
Y2	900 (thread trimmer)
Y3	W1 (thread wiper)
Y4	Automatic presser foot lift
Y8	Thread tension release
X40	Zigzag sensor
X41	Light transmitter
X42	Light receiver
X43	Bobbin thread monitor

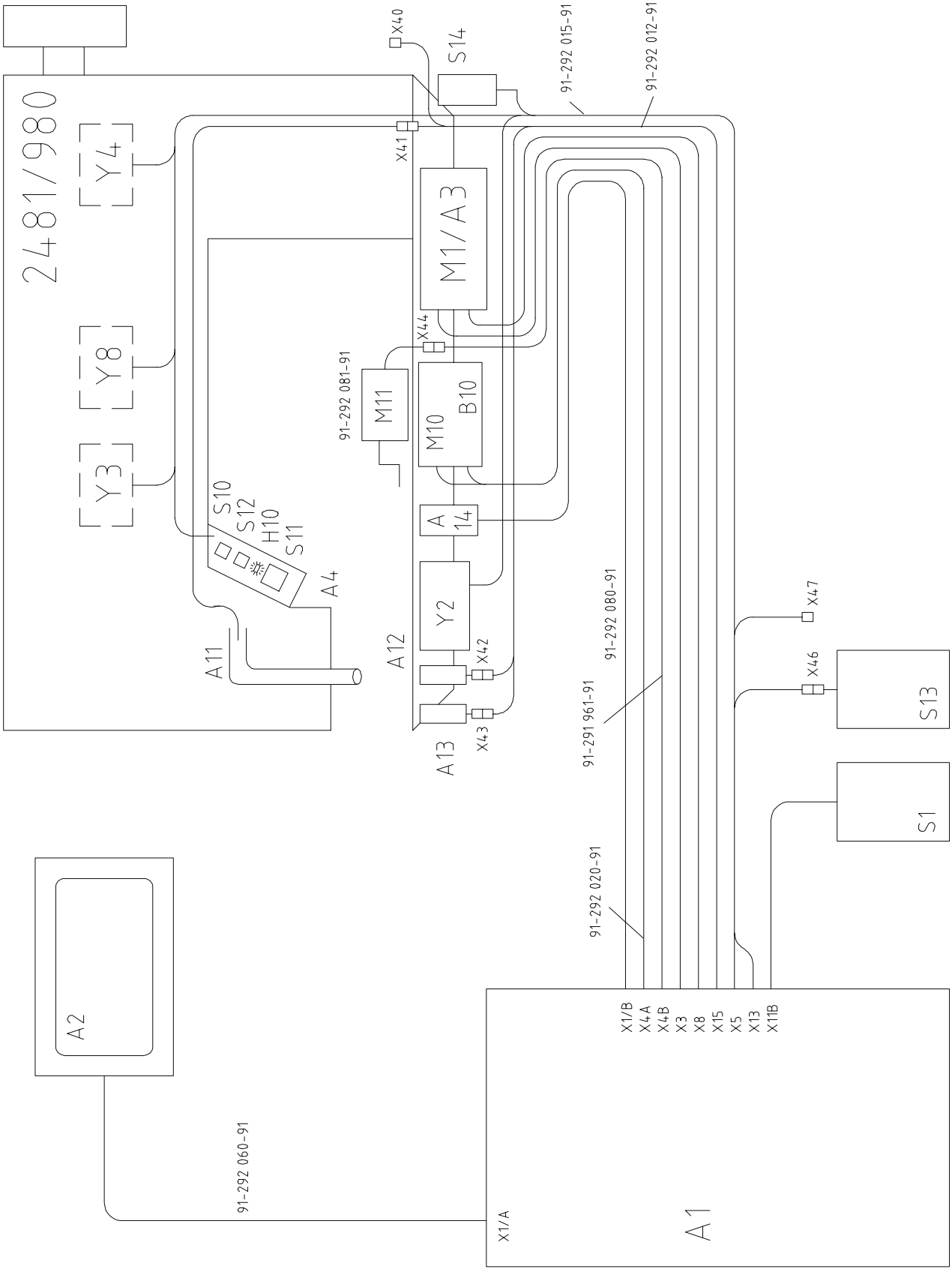
2481/980
Y4
Y8
Y3
S10
S12
H10
S11
A4
A11
X40
S14
X41
M1/A3
X44
M11
91-292 081-91
M10
B10
A
14
A12
Y2
X42
X43
A13
91-292 015-91
91-292 012-91
91-292 080-91
91-291 961-91
X47
X46
S13
S1
91-292 020-91
A2
91-292 060-91
X1/A
A1
X1/B
X4A
X4B
X3
X8
X15
X5
X13
X11B

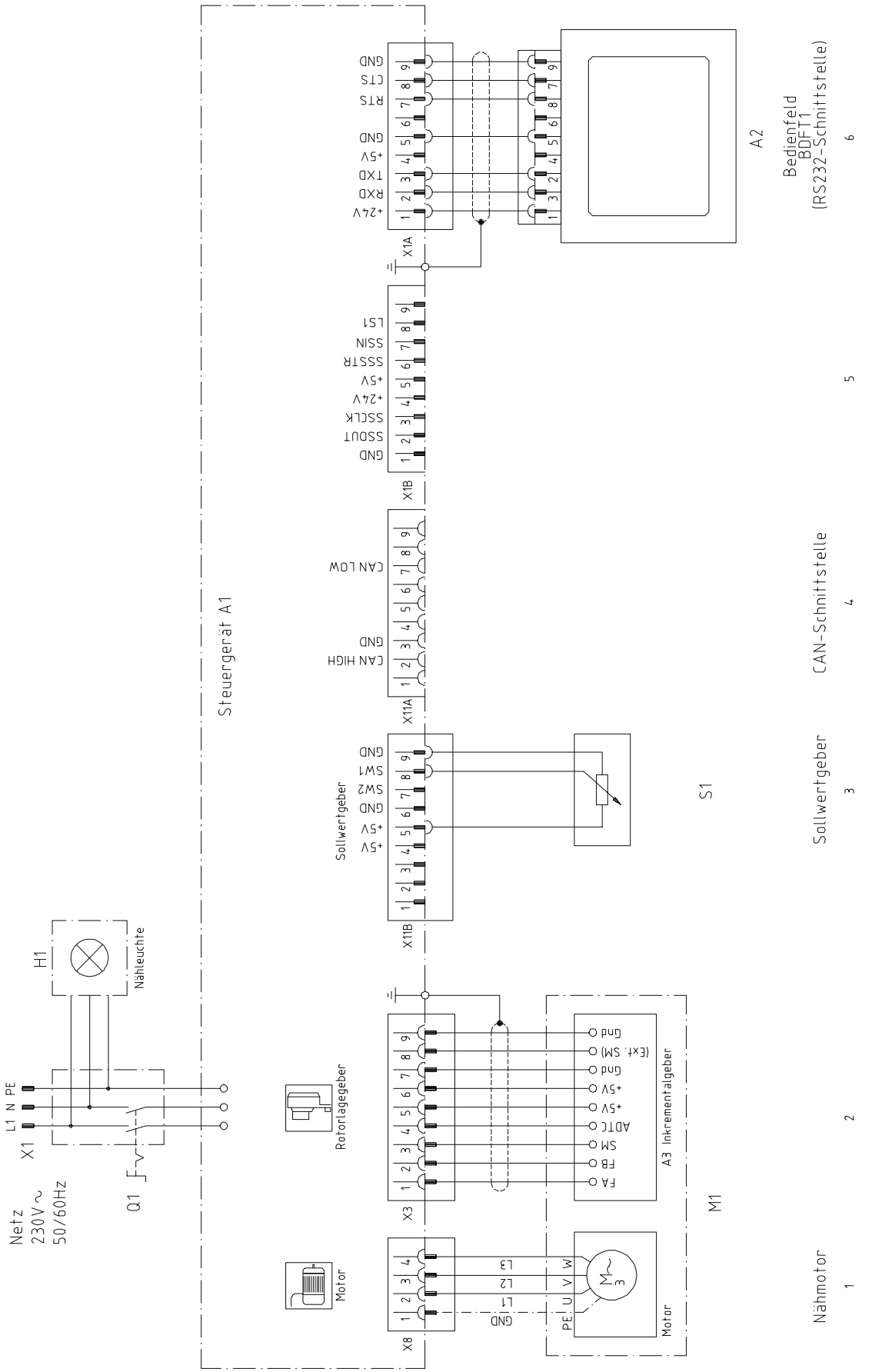
Steuergerät A1
A2
Bedienfeld
BDFT1
(RS232-Schnittstelle)
X1A
GND
CTS
RTS
GND
+5V
TXD
RXD
+24V
X1B
GND
SSOUT
SSCLK
+24V
+5V
SSSTR
SSIN
LS1
X11A
CAN HIGH
GND
CAN LOW
CAN-Schnittstelle
X11B
Sollwertgeber
+5V
+5V
GND
GND
SW2
SW1
GND
S1
Sollwertgeber
M1
A3 Inkrementalgeber
Gnd
(Ext. SM)
Gnd
+5V
+5V
ADTC
SM
FB
FA
X3
Rotorlagegeber
X8
GND
L1
L2
L3
PE U V W
M~ 3
Motor
Motor
Nähmotor
H1
Nähleuchte
X1
L1 N PE
Netz
230V~
50/60Hz
Q1
1
2
3
4
5
6

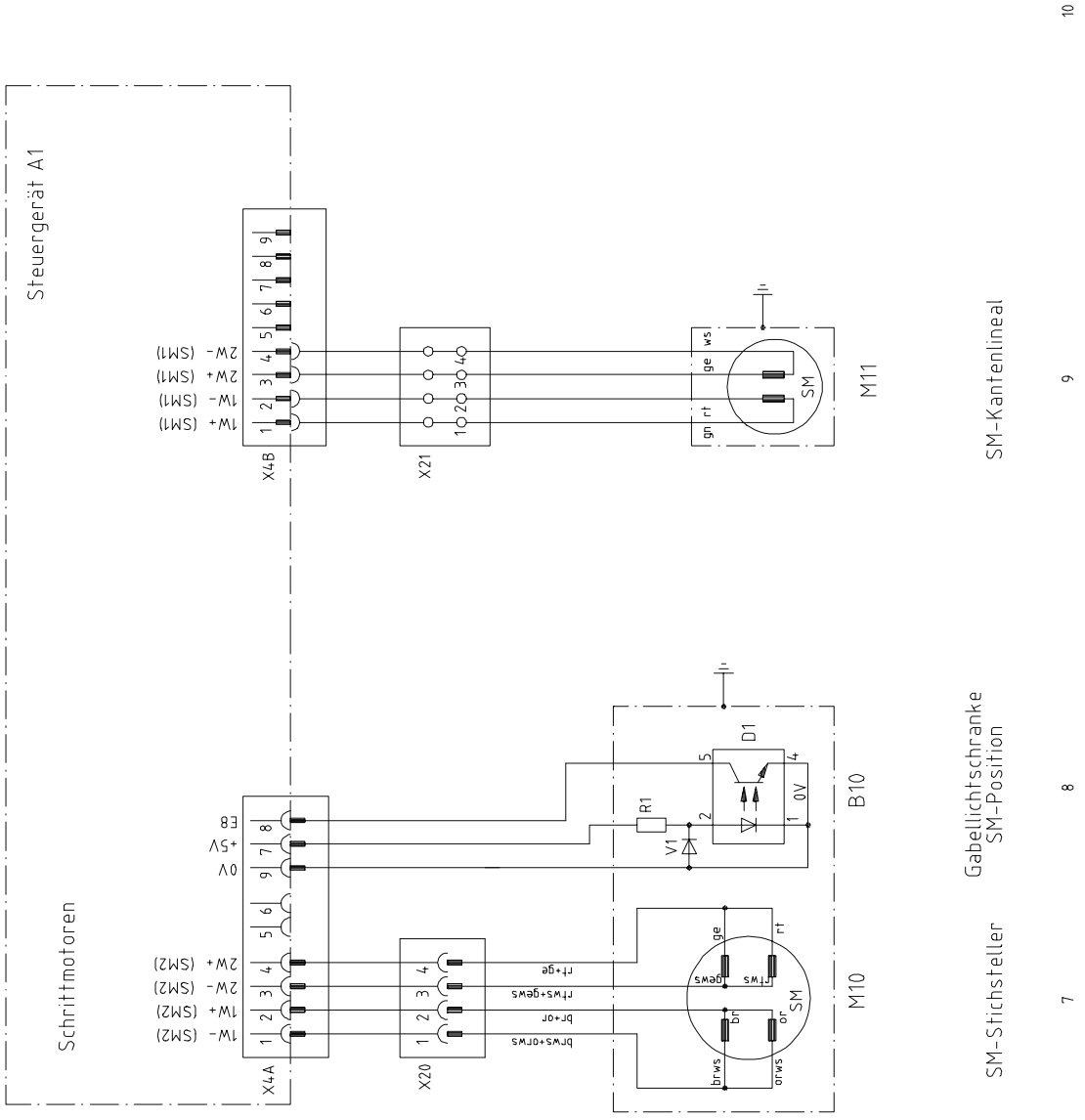
Steuergerät A1
Schrittmotoren
X4B
X4A
X21
X20
1W+ (SM1)
1W- (SM1)
2W+ (SM1)
2W- (SM1)
1W- (SM2)
1W+ (SM2)
2W- (SM2)
2W+ (SM2)
0V
+5V
E8
M11
M10
B10
SM
D1
R1
V1
0V
SM-Kantenlineal
Gabellichtschranke
SM-Position
SM-Stichsteller
10
9
8
7

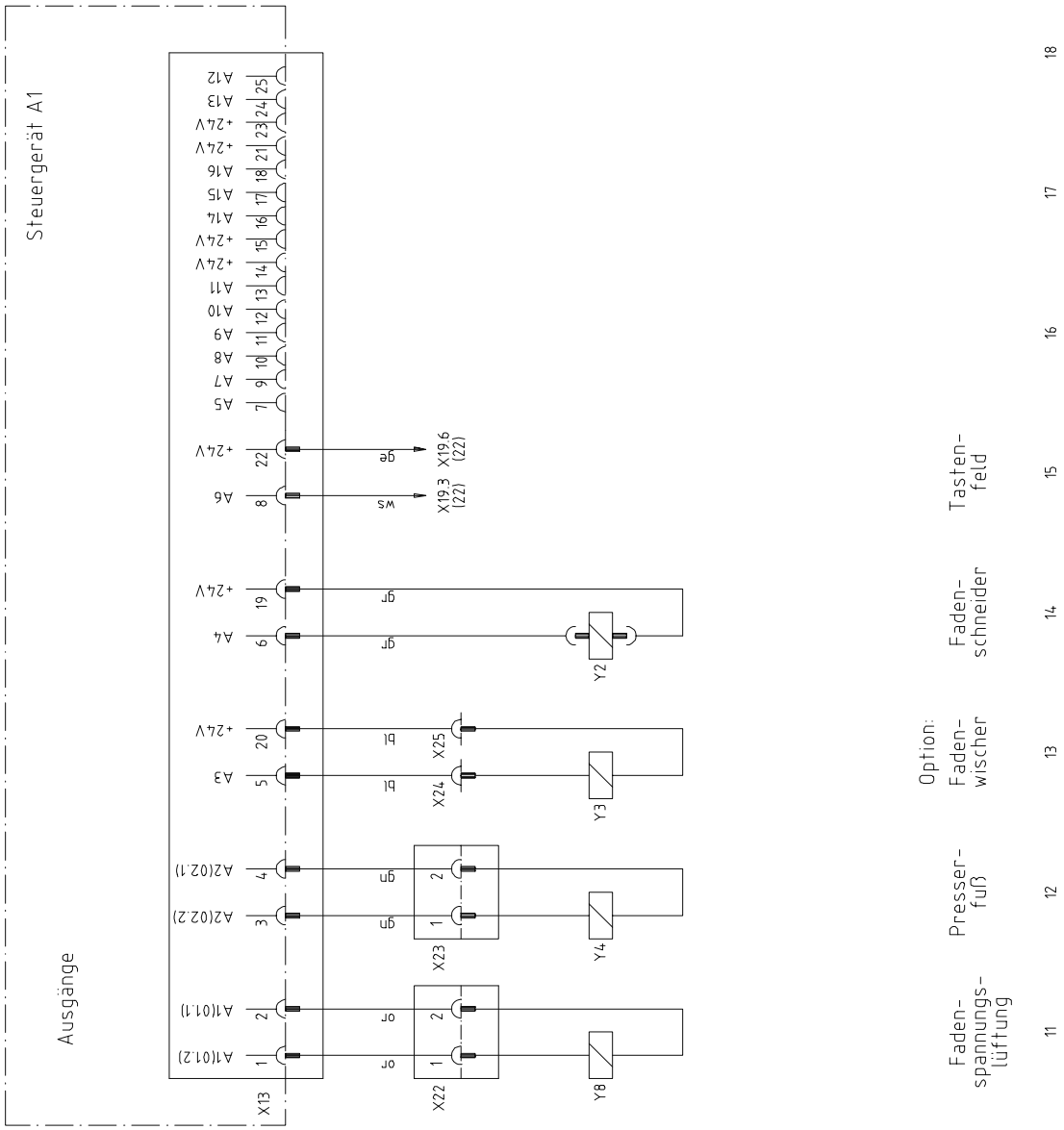
Steuergerät A1
Ausgänge
X13
A1(01.2)
A1(01.1)
A2(02.2)
A2(02.1)
A3
A4
A6
+24V
A5
A7
A8
A9
A10
A11
A12
A13
A14
A15
A16
X22
X23
X24
X25
Y2
Y3
Y4
Y8
X19.3 (22)
X19.6 (22)
Option:
Faden-spannungs-lüftung
Presser-fuß
Faden-wischer
Faden-schneider
Tasten-feld

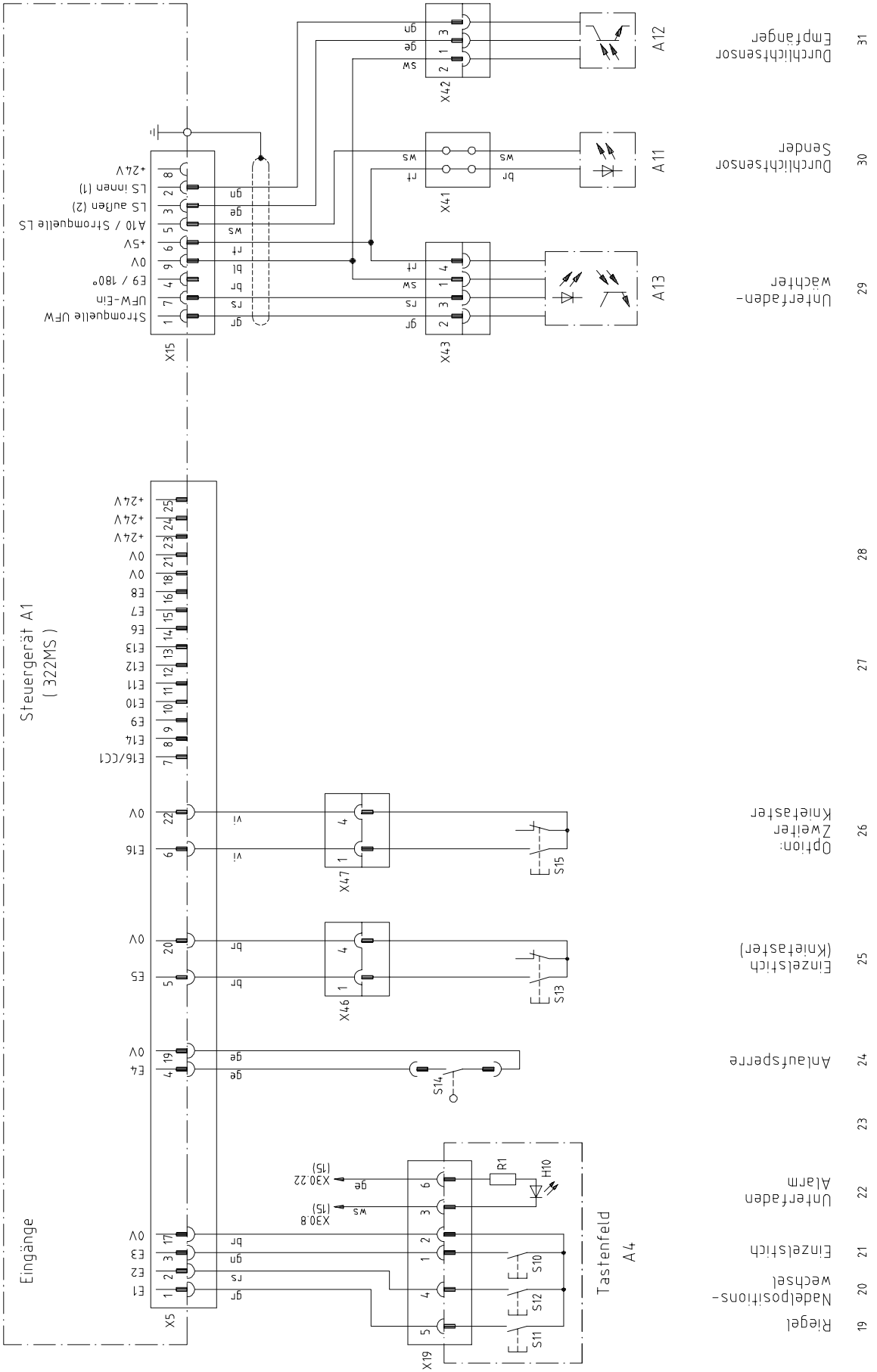
Steuergerät A1
(322MS)
Eingänge
X5
X15
Stromquelle UFW
UFW-Ein
E9 / 180°
0V
+5V
A10 / Stromquelle LS
LS aufen (2)
LS innen (1)
+24V
X41
X42
X43
A11
A12
A13
Durchlichtsensor Sender
Durchlichtsensor Empfänger
Unterfaden-wächter
X46
X47
S13
S14
S15
Einzelstich (Knietaster)
Anlaufsperre
Option: Zweiter Knietaster
X19
Tastenfeld A4
S10
S11
S12
R1
H10
Einzelstich
Unterfaden Alarm
Nadelpositions-wechsel
Riegel
19
20
21
22
23
24
25
26
27
28
29
30
31

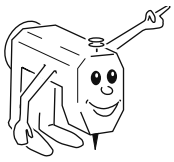

Note

PFAFF® Industrial



Europäische Union
Wachstum durch Innovation – EFRE



PFAFF Industriesysteme
und Maschinen AG

Hans-Geiger-Str. 12 - IG Nord
D-67661 Kaiserslautern

Phone: +49-631 200-0
Fax: +49-631 17202
E-mail: info@pfaff-industrial.com

Hotlines:
Technical service: +49-175/2243-101
Application consultance: +49-175/2243-102
Spare-parts hotline: +49-175/2243-103

Printed in Germany