PFAFF® Industrial

2483-980/31
-980/33
plusline

INSTRUCTION MANUAL

This instruction manual applies to machines from the following serial numbers **2 216 531** and software version **0307/001** onwards:

296-12-18 763/002
Betriebsanleitung engl. 03.10



This Instruction Manual is valid for all models and subclasses listed in the chapter "Specifications ".

The reprinting, copying or translation of PFAFF Instruction Manuals, whether in whole or in part, is only permitted with our previous authorization and with written reference to the source.

PFAFF Industriesysteme
und Maschinen AG

Hans-Geiger-Str. 12 - IG Nord
D-67661 Kaiserslautern

Contents ..... Chapter – Page

1	**Safety**	**1 - 1**
1.01	Directives	1 - 1
1.02	General notes on safety	1 - 1
1.03	Safety symbols	1 - 2
1.04	Important points for the user	1 - 2
1.05	Operating and specialist personnel	1 - 3
1.05.01	Operating personnel	1 - 3
1.05.02	Specialist personnel	1 - 3
1.06	Danger	1 - 4
2	**Proper use**	**2 - 1**
3	**Specifications**	**3 - 1**
3.01	PFAFF 2483-980/31	3 - 1
3.02	Models and subclasses	3 - 1
4	**Disposal of machine**	**4 - 1**
5	**Transport, packaging and storage**	**5 - 1**
5.01	Transportation to customer's premises	5 - 1
5.02	Transport within the customer's premises	5 - 1
5.03	Disposal of the packaging	5 - 1
5.04	Storage	5 - 1
6	**Explanation of the symbols**	**6 - 1**
7	**Control elements**	**7 - 1**
7.01	On/off switch	7 - 1
7.02	Keys on machine head	7 - 1
7.03	Pedal	7 - 2
7.04	Lever for lifting the presser foot	7 - 2
7.05	Knee switch	7 - 3
7.06	Lever for adjusting the edge guide	7 - 3
7.07	Control panel	7 - 4
7.07.01	Screen displays	7 - 4
7.07.02	Function keys	7 - 4
8	**Mounting and commissioning the machine**	**8 - 1**
8.01	Mounting	8 - 1
8.01.01	Adjusting the table-top height	8 - 1
8.01.02	Mounting the spool holder	8 - 2
8.01.03	Connecting the plug-in connections and earth cables	8 - 3
8.02	Commissioning	8 - 4
8.03	Switching the machine on/off	8 - 4
8.04	Start inhibitor	8 - 5

Contents ..... Chapter – Page

8.04.01 Mounting the start inhibitor ..... 8 - 5
8.04.02 Checking the function of the start inhibitor ..... 8 - 5
8.05 Table top cutout ..... 8 - 6

9 Preparation ..... 9 - 1
9.01 Inserting the needle ..... 9 - 1
9.02 Winding the bobbin thread, adjusting the thread tension ..... 9 - 2
9.03 Removing/Inserting the bobbin case ..... 9 - 3
9.04 Inserting the bobbin in the bobbin case ..... 9 - 3
9.05 Threading the bobbin case / Adjusting the bobbin thread tension ..... 9 - 4
9.06 Threading the needle thread / Adjusting the needle thread tension ..... 9 - 5
9.07 Entering the stitch length ..... 9 - 6
9.08 Entering the maximum speed ..... 9 - 6
9.09 Entering the start and end backtacks ..... 9 - 7
9.10 Setting the remaining stitches for the bobbin thread control ..... 9 - 8

10 Sewing ..... 10 - 1
10.01 Manual sewing ..... 10 - 1
10.02 Programmed sewing ..... 10 - 2
10.03 Error messages ..... 10 - 3

11 Input ..... 11 - 1
11.01 Seam program input ..... 11 - 1
11.02 Example of a seam program input ..... 11 - 1
11.03 Forms for recording programs ..... 11 - 14

12 Care and Maintenance ..... 12 - 1
12.01 Cleaning the machine ..... 12 - 1
12.02 Topping up the oil tank ..... 12 - 2

13 Adjustment ..... 13 - 1
13.01 Notes on adjustment ..... 13 - 1
13.02 Tools, gauges and other accessories ..... 13 - 1
13.03 Abbreviations ..... 13 - 1
13.04 Checking and adjusting aids ..... 13 - 2
13.05 Adjusting the basic machine ..... 13 - 3
13.05.01 Basic position of the machine drive unit ..... 13 - 3
13.05.02 Preadjusting the needle height ..... 13 - 4
13.05.03 Neutral position of the bottom feed dog ..... 13 - 5
13.05.04 Feeding motion of the bottom feed dog ..... 13 - 6
13.05.05 Lifting motion of the bottom feed dog ..... 13 - 7
13.05.06 Height of the bottom feed dog ..... 13 - 8
13.05.07 Needle in needle hole centre ..... 13 - 9
13.05.08 Hook shaft bearing and toothed belt tension ..... 13 - 10
13.05.09 Hook lubrication ..... 13 - 11

Contents ..... Chapter – Page

13.05.10 Needle rise, hook-to-needle clearance, needle height and bobbin case position finger ..... 13 - 12
13.05.11 Thread check spring and slack thread regulator ..... 13 - 13
13.05.12 Presser foot clearance ..... 13 - 14
13.05.13 Bobbin winder ..... 13 - 15
13.05.14 Setting the zero point of the feed regulator ..... 13 - 16
13.05.15 Stitch length adjustment forwards and in reverse ..... 13 - 17
13.05.16 Mechanical limiting of the stitch length ..... 13 - 18
13.05.17 Presser foot pressure ..... 13 - 19

13.06 Adjusting the thread trimming device -900/24 ..... 13 - 20
13.06.01 Adjusting the solenoid / preliminary adjustment of the control cam ..... 13 - 20
13.06.02 Lateral alignment of the thread catcher ..... 13 - 21
13.06.03 Knife position ..... 13 - 22
13.06.04 Front point of reversal of the thread catcher ..... 13 - 23
13.06.05 Manual trimming check ..... 13 - 24
13.06.06 Needle thread tension release ..... 13 - 25
13.06.07 Readjusting the control cam ..... 13 - 26

13.07 Adjusting the thread wiper -909/04 ..... 13 - 27
13.07.01 Thread wiper movement ..... 13 - 27
13.07.02 Thread wiper position ..... 13 - 28

13.08 Aligning the light transmitter ..... 13 - 29
13.09 Adjustment of the transmitted light sensors ..... 13 - 30
13.10 Function control of the bobbin thread monitor ..... 13 - 31

13.11 Parameter settings ..... 13 - 32
13.11.01 Example of a parameter input ..... 13 - 32
13.11.02 Selecting the user level ..... 13 - 33
13.11.03 List of parameters ..... 13 - 34

13.12 Explanation of the error messages ..... 13 - 41
13.13 Service functions ..... 13 - 42
13.14 Internet update of the machine software ..... 13 - 47

14 Wearing parts ..... 14 - 1

15 Circuit diagrams ..... 15 - 1

1 Safety

1.01 Directives

This machine is constructed in accordance with the European regulations contained in the conformity and manufacturer's declarations.
In addition to this Instruction Manual, also observe all generally accepted, statutory and other regulations and legal requirements and all valid environmental protection regulations!
The regionally valid regulations of the social insurance society for occupational accidents or other supervisory organizations are to be strictly adhered to!

1.02 General notes on safety

- This machine may only be operated by adequately trained operators and only after having completely read and understood the Instruction Manual!
- All Notes on Safety and Instruction Manuals of the motor manufacturer are to be read before operating the machine!
- The danger and safety instructions on the machine itself are to be followed!
- This machine may only be used for the purpose for which it is intended and may not be operated without its safety devices. All safety regulations relevant to its operation are to be adhered to.
- When exchanging sewing tools (e.g. needle, roller presser, needle plate and bobbin), when threading the machine, when leaving the machine unattended and during maintenance work, the machine is to be separated from the power supply by switching off the On/Off switch or by removing the plug from the mains!
- Everyday maintenance work is only to be carried out by appropriately trained personnel!
- Repairs and special maintenance work may only be carried out by qualified service staff or appropriately trained personnel!
- Work on electrical equipment may only be carried out by appropriately trained personnel!
- Work is not permitted on parts and equipment which are connected to the power supply! The only exceptions to this rule are found in the regulations EN 50110.
- Modifications and alterations to the machine may only be carried out under observance of all the relevant safety regulations!
- Only spare parts which have been approved by us are to be used for repairs! We expressly point out that any replacement parts or accessories which are not supplied by us have not been tested and approved by us. The installation and/or use of any such products can lead to negative changes in the structural characteristics of the machine. We are not liable for any damage which may be caused by non-original parts.

1.03 Safety symbols



Danger!
Points to be observed.



Danger of injury for operating and specialist personnel!



Electric voltage!
Danger to operating or technical staff!



Caution

Do not operate without finger guard and safety devices. Before threading, changing bobbin and needle, cleaning etc. switch off main switch.

1.04 Important points for the user

- This Instruction Manual is an integral part of the machine and must be available to the operating personnel at all times.
- The Instruction Manual must be read before operating the machine for the first time.
- The operating and specialist personnel is to be instructed as to the safety equipment of the machine and regarding safe work methods.
- It is the duty of the user to only operate the machine in perfect running order.
- It is the obligation of the user to ensure that none of the safety mechanisms are removed or deactivated.
- It is the obligation of the user to ensure that only authorized persons operate and work on the machine.

Further information can be obtained from your PFAFF agent.

1.05 Operating and specialist personnel

1.05.01 Operating personnel

Operating personnel are persons responsible for the equipping, operating and cleaning of the machine as well as for taking care of problems arising in the sewing area.

The operating personnel is required to observe the following points and must:

- always observe the Notes on Safety in the Instruction Manual!
- never use any working methods which could adversely affect the safety of the machine!
- not wear loose-fitting clothing or jewelery such as chains or rings!
- also ensure that only authorized persons have access to the potentially dangerous area around the machine!
- always immediately report to the person responsible any changes in the machine which may limit its safety!

1.05.02 Specialist personnel

Specialist personnel are persons with a specialist education in the fields of electrics, electronics and mechanics. They are responsible for the lubrication, maintenance, repair and adjustment of the machine.
The specialist personnel is obliged to observe the following points and must:

- always observe the Notes on Safety in the Instruction Manual!
- switch off the On/Off switch before carrying out adjustments or repairs, and ensure that it cannot be switched on again unintentionally!
- wait until the luminous diode on the control box is no longer blinking or on before beginning adjustment or repair work.
- never work on parts which are still connected to the power supply! Exceptions are explained in the regulations EN 50110.
- replace the protective coverings and close the electrical control box afer all repairs or maintenance work!

1.06 Danger

A working area of **1 meter** is to be kept free both in front of and behind the machine while it is in operation so that it is always easily accessible.

Never reach into the sewing area while sewing! Danger of injury by the needle!

Never leave objects on the table while adjusting the machine settings! Objects can become trapped or be slung away! Danger of injury!

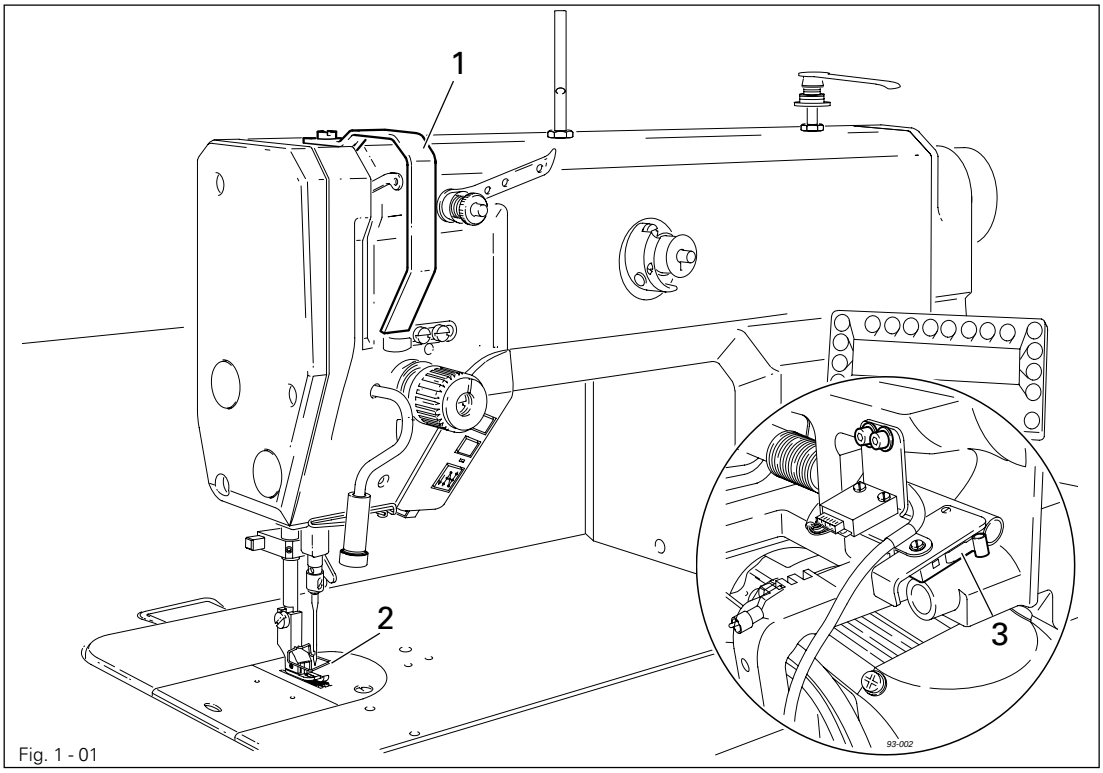

Fig. 1 - 01

Do not operate the machine without its take-up lever guard **1**!
Danger of injury due to the motion of the take-up lever!

Do not operate the machine without the finger guard **2**!
Danger of injury by the needle!

Do not start the machine without start inhibitor **3**!
Danger of injury if the machine is started accidentally!

2 Proper use

The PFAFF 2483-980/.. is an ultra high-speed, single-needle sewing machine with bottom feed and sensor control for recognising the material edge.

The machine is used in industry for sewing lockstitch seams.



Any and all uses of this machine which have not been approved of by the manufacturer are considered to be inappropriate! The manufacturer cannot be held liable for any damage caused by the inappropriate use of the machine! The appropriate use of the machine includes the observance of all operational, adjustment, maintenance and repair measures required by the manufacturer!

3 Specifications*

3.01 PFAFF 2483-980/..

Stitch type: ..... 301 (lockstitch)
Needle system: 134

Needle size in 1/100 mm: .....
Model A: ..... 60 - 70
Model B: ..... 80 - 100

Distance sensor 1 to needle:
2483-980/31: 20
2483-980/33: 10

Effective balance wheel diameter: ..... 65 mm
Presser foot clearance: ..... 9 - 13 mm
Clearance width: ..... 260 mm
Clearance height: ..... 125 mm

Bed plate dimensions: ..... 476 x 177 mm

Sewing head dimensions:
Length: ..... ca. 550 mm
Width: ..... ca. 180 mm
Height (above table): ..... ca. 300 mm

Max. stitch length: ..... 2.5 mm
Max. speed: ..... 4500 spm ▲

Connection data:
Operating voltage: ..... 230 V ± 10 %, 50/60 Hz
Max. power consumption: ..... 400 VA
Fuse protection: ..... 1 x 16 A, inert
Leakage current ..... ≤ 5 mA◆

Ambient temperature
85% rel. humidity (condensation not permitted):: ..... 5 - 40° C

Noise data:
Noise emission level at workplace with a sewing speed of 3600 spm: ..... L_{pA} < 79 dB(A) ■
(Noise measurement in accordance with DIN 45 635-48-A-1, ISO 11204, ISO 3744, ISO 4871)

Net weight of sewing head: ..... ca. 30 kg
Gross weight of sewing head: ..... ca. 38 kg

* Subject to alterations

◆ Due to the use of network filters there is a nominal leakage current of ≤ 5 mA.

▲ Depending on the stitch length, the max. speed is reduced automatically within the max. preset value.

■ K_{pA} = 2.5 dB

3.02 Models and subclasses

Model A: ..... for sewing fine materials
Model B: ..... for sewing medium-weight materials
Additional equipment:
Sub-class -909/04 ..... Thread wiper

4 Disposal of machine

- The proper disposal of the machine is the responsibility of the customer.
- The materials used in the machines are steel, aluminium, brass and various plastics. The electrical equipment consists of plastics and copper.
- The machine is to be disposed of in accordance with the locally valid environmental protection regulations. If necessary, a specialist is to be commissioned.



Special care is to be taken that parts soiled with lubricants are separately disposed of in accordance with the locally valid pollution control regulations!

5 Transport, packaging and storage

5.01 Transportation to customer's premises

The machines are delivered completely packed.

5.02 Transport within the customer’s premises

The manufacturer bears no liability for transport within the customer’s premises or to the individual locations of use. Make sure that the machines are always transported upright.

5.03 Disposal of the packaging

The packaging of these machines consists of paper, cardboard and VCE fiber. The proper disposal of the packaging is the responsibility of the customer.

5.04 Storage

The machine can be stored for up to 6 months if not in use. During this time it should be protected from dust and moisture.
For longer storage the individual parts of the machine, especially the moving parts, must be protected from corrosion, e.g. by a film of oil.

6 Explanation of the symbols

In the following section of this Instruction Manual, certain tasks or important pieces of information are accentuated by symbols.
The symbols used have the following meanings:



Note, information



Cleaning, care



Lubrication, greasing

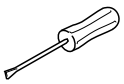

Servicing, repairing, adjustment, maintenance
(only to be carried out by specialist personnel)

7 Control elements

7.01 On/off switch

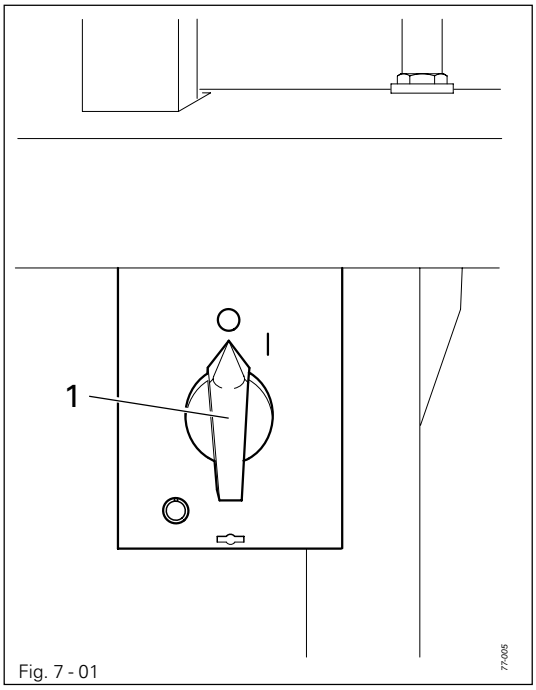

Fig. 7 - 01

Before switching on the machine, raise the take-up lever as far as possible.

- The machine can be switched on or off by turning the on/off switch **1**.

7.02 Keys on machine head

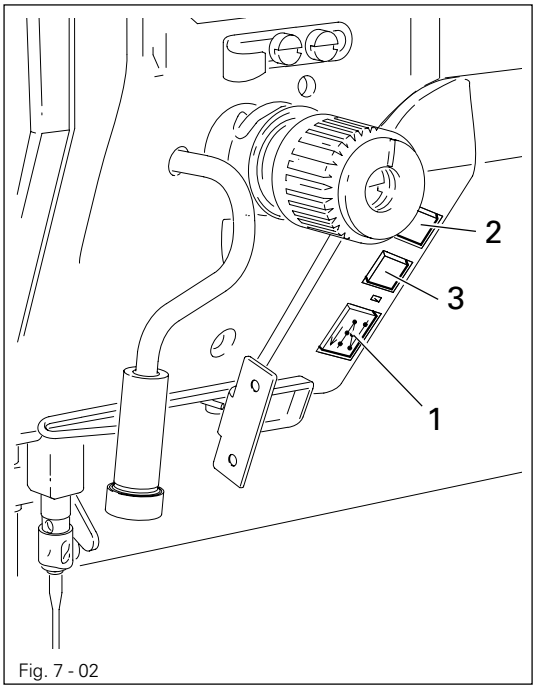

Fig. 7 - 02

- By operating the respective keys, the following functions are carried out:

  Key **1**: Reverse sewing

  Key **2**: Raise the needle, without thread trimming

  Key **3**: Carry out a single stitch

7.03 Pedal

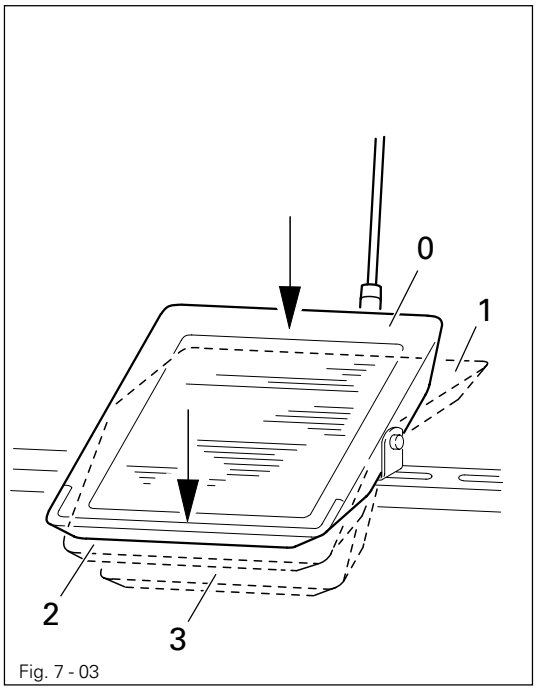

Fig. 7 - 03

0 = Neutral position

1 = Sewing

2 = Raise presser foot

3 = Cut thread / reset bobbin thread monitor or bobbin rest thread count function

7.04 Lever for lifting the presser foot

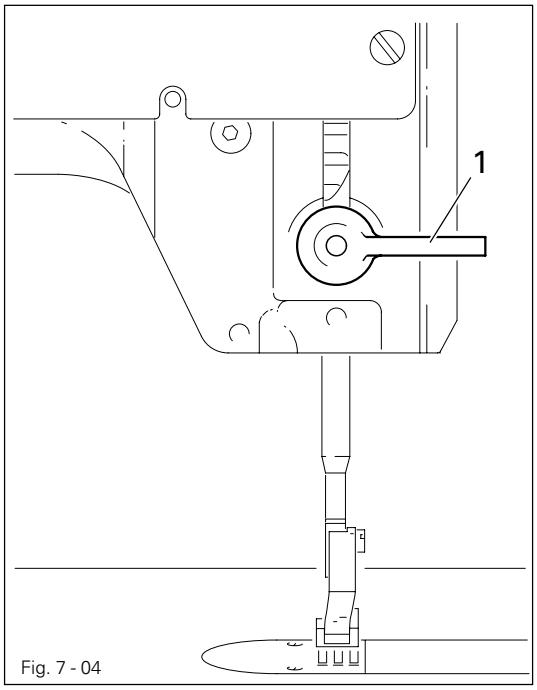

Fig. 7 - 04

- The presser foot is raised by turning lever **1**.

7.05 Knee switch

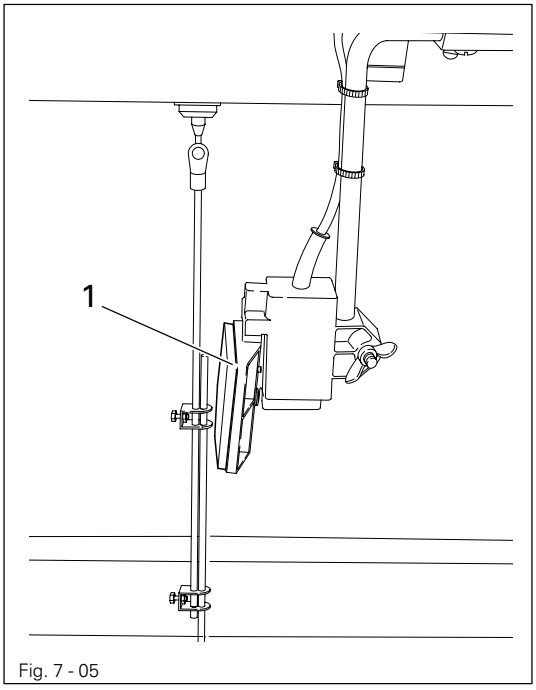

Fig. 7 - 05

- When the knee switch **1** is operated, one stitch is sewn with a reduced stitch length.

The value for the reduced stitch length is set with parameter "835", see **Chapter 13.11 Parameter settings.**

7.06 Lever for adjusting the edge guide

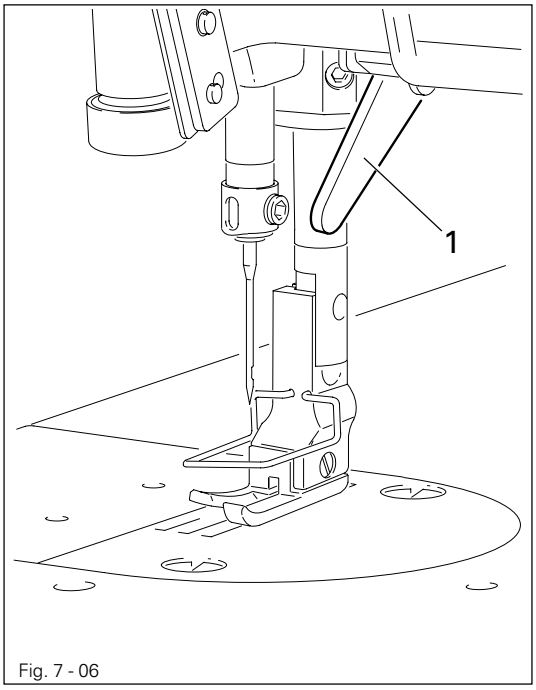

Fig. 7 - 06

- Swing down lever **1** to release the clamp on the edge guide.
- Adjust the edge guide to the desired distance from the needle.
- Swing up lever **1** to clamp the edge guide again.

7.07 Control panel

The control panel is used to create and alter seam programs, enter parameter values and read error messages and service settings.

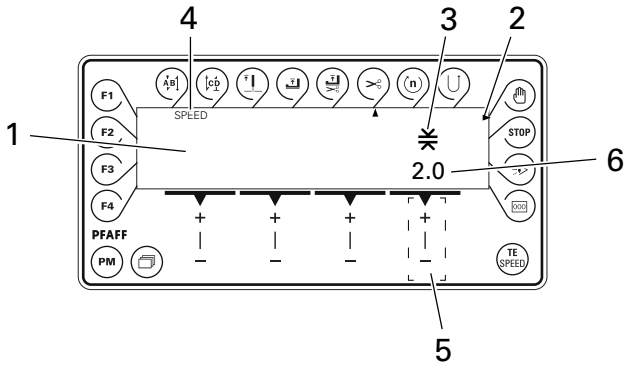

The control panel consists of display **1** and the function keys described below. Display **1** consists of a two-row, alpha-numerical display with 16 symbols per row. The special symbols **3** and texts **4** show the respective status of the function keys and the operating modes of the machine.
During the power-on phase the control panel automatically switches on all LCD segments and the horn. Afterwards the lettering PFAFF appears on the display, until the higher-ranking control unit sends commands to the control panel.

7.07.01 Screen displays

- Activated functions are displayed with a triangular marking **2** below or next to the respective function key.
- In the sewing mode all relevant sewing data is displayed and these can be changed directly, depending on the status of the machine, see also **Chapter 10 Sewing.**
- During the parameter input the selected parameter number with the corresponding value is displayed, see **Chapter 13.11 Parameter settings.**
- During the seam program input the inputs are carried out in relevant input menus, see **Chapter 11.01 Seam program input.**

7.07.02 Function keys

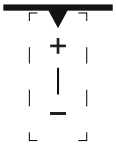

The function keys described below are used basically to switch machine functions on and off. If a corresponding value has to be set for the activated function, this is carried out with the corresponding **+/- key.** For example, by pressing and holding the **+/- key 5**, the numerical value **6** shown above the key is changed slowly to begin with. If the **+/- key 5** is held down longer, the numerical value **6** is changed more quickly.



Start backtacks

- If this key is pressed, the backtacks at the beginning of the seam (start backtacks) are switched on or off. The number of forward stitches (A) or reverse stitches (B) for the start backtacks can be changed by pressing the +/- key underneath. To convert from double backtack to single backtack set the number of stitches for the corresponding seam section at zero.



End backtacks

- If this key is pressed, the backtacks at the end of the seam (end backtacks) are switched on or off. The number of reverse stitches (C) or forward stitches (D) can be changed by pressing the +/- key underneath. To convert from double backtack to single backtack set the number of stitches for the corresponding seam section at zero.



Needle position

- If this key is pressed the "needle raised after sewing stop" function is switched on or off. When the function is switched on, the needle positions at t.d.c. after sewing stops.



Foot position after stop

- If this key is pressed the "foot raised after sewing stop" function is switched on or off. When the function is switched on, the presser foot is raised after sewing stops.



Foot position after trimming

- If this key is pressed the "foot raised after thread trimming" function is switched on or off. When the function is switched on, the presser foot is raised after thread trimming.



Thread trimmer

- If this key is pressed the thread trimming function is switched on or off.



Speed

- If this key is pressed the corresponding function is switched on or off. When the function is switched on, the current seam section is sewn at the speed entered irrespective of the pedal position (Parameter "222", see Chapter 13.11 Parameter settings).



Reverse sewing

- If this key is pressed the corresponding function is switched on or off. When the function is switched during programmed sewing, the corresponding seam section is sewn in reverse.



Manual seam end

- If this key is pressed the corresponding function is switched on or off. When the function is switched on, the move to the next seam section is not carried out by stitch counting or sensor, but manually with the use of the pedal (position "-2").



Programmed stop

- If this key is pressed the corresponding function is switched on or off. When the function is switched on, the machine stops automatically at the end of a seam section.



Sensor

- If this key is pressed the corresponding function is switched on or off.
  When the function is switched on, the move to the next seam section is carried out by sensor.



Stitch counting

- If this key is pressed the corresponding function is switched on or off. When the function is switched on, the machine moves to the next seam section after sewing the number of stitches entered.



TE/Speed

- If this key is pressed once while the machine is in the sewing mode, the input menu for the maximum speed is selected. If no input is made within 5 seconds, the sewing mode is selected again.
- If this key is pressed twice (within 5 seconds) while the machine is in the sewing mode, the machine switches to parameter input.
- If this key is pressed once while the machine is in the parameter input mode, the altered values are stored and the sewing mode is selected.



Scrolling

- If this key is pressed the machine scrolls among the displays (parameters), if more than 4 parameters are directly accessible in the sewing mode.



PM

- If this key is pressed the programmed sewing function is switched on or off. When the function is switched on, the letters "PM" appear on the display of the control panel. The parameters related to the program are shown in the alpha-numerical part of the display.



F1

- F1

If this key is pressed the service menu is selected, see **Chapter 13.13 Service functions.**



F2

No function



F3

- If this key is pressed the adjustment of the light barrier is started, see **Chapter 13.09 Adjustment of the transmitted light sensors.**



F4

- If this key is pressed, the next bartack is not sewn.

8 Mounting and commissioning the machine

The machine must only be mounted and commissioned by qualified personnel! All relevant safety regulations are to be observed!

If the machine is delivered without a table, be sure that the frame and the table top which you intend to use can hold the weight of the machine and the motor. It must be ensured that the supporting structure is sufficiently sturdy, even during sewing operations.

8.01 Mounting

The necessary electricity supply must be available at the machine's location. Also, a stable and horizontal surface as well as adequate lighting are required at the location.

Depending on the type of table, the method of packaging used may require that the table top be lowered for transport. The following is a description of how to adjust the height of the table top.

8.01.01 Adjusting the table-top height

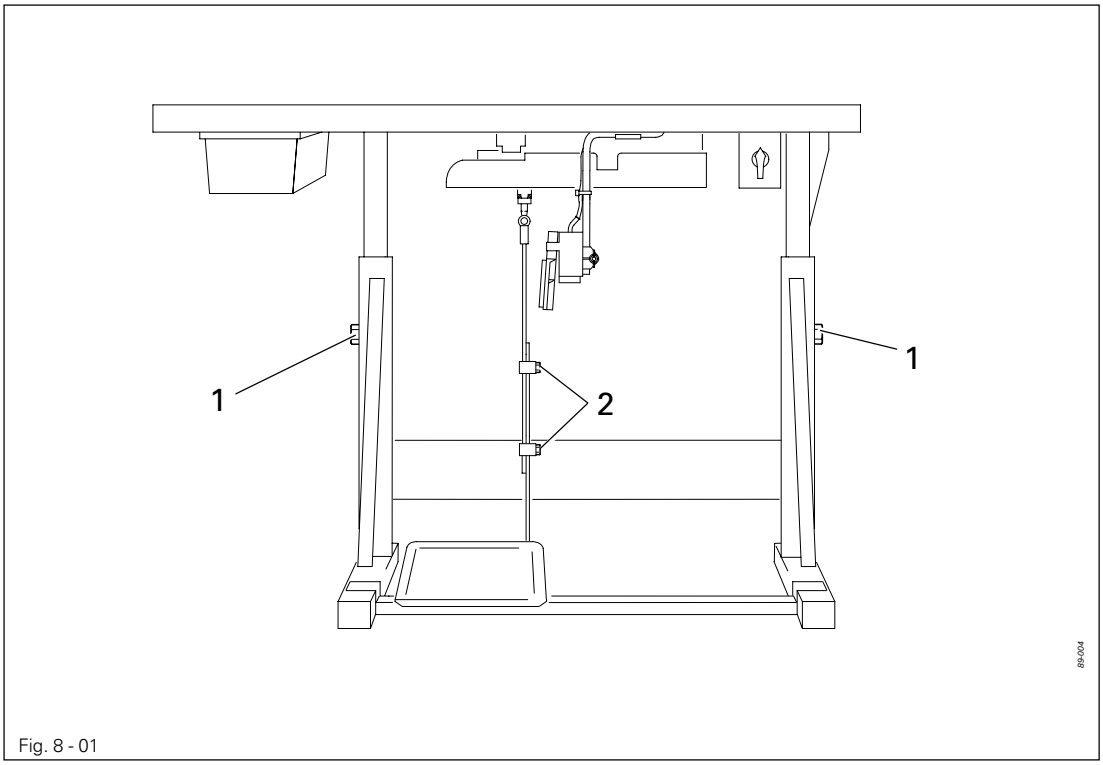

Fig. 8 - 01

- Loosen screws **1** and **2** and set the desired table-top height
- Tighten screws **1** well.
- Adjust the pedal to the desired position and tighten screw **2**.

8.01.02 Mounting the spool holder

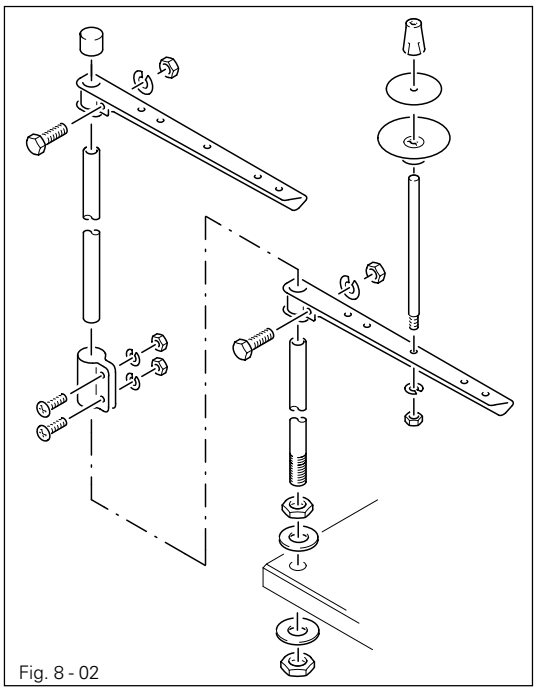

Fig. 8 - 02

- Mount the spool holder as shown in **Fig. 8-02**.
- Insert the spool holder into the hole in the table top and fasten it with the nuts enclosed.

8.01.03 Connecting the plug-in connections and earth cables

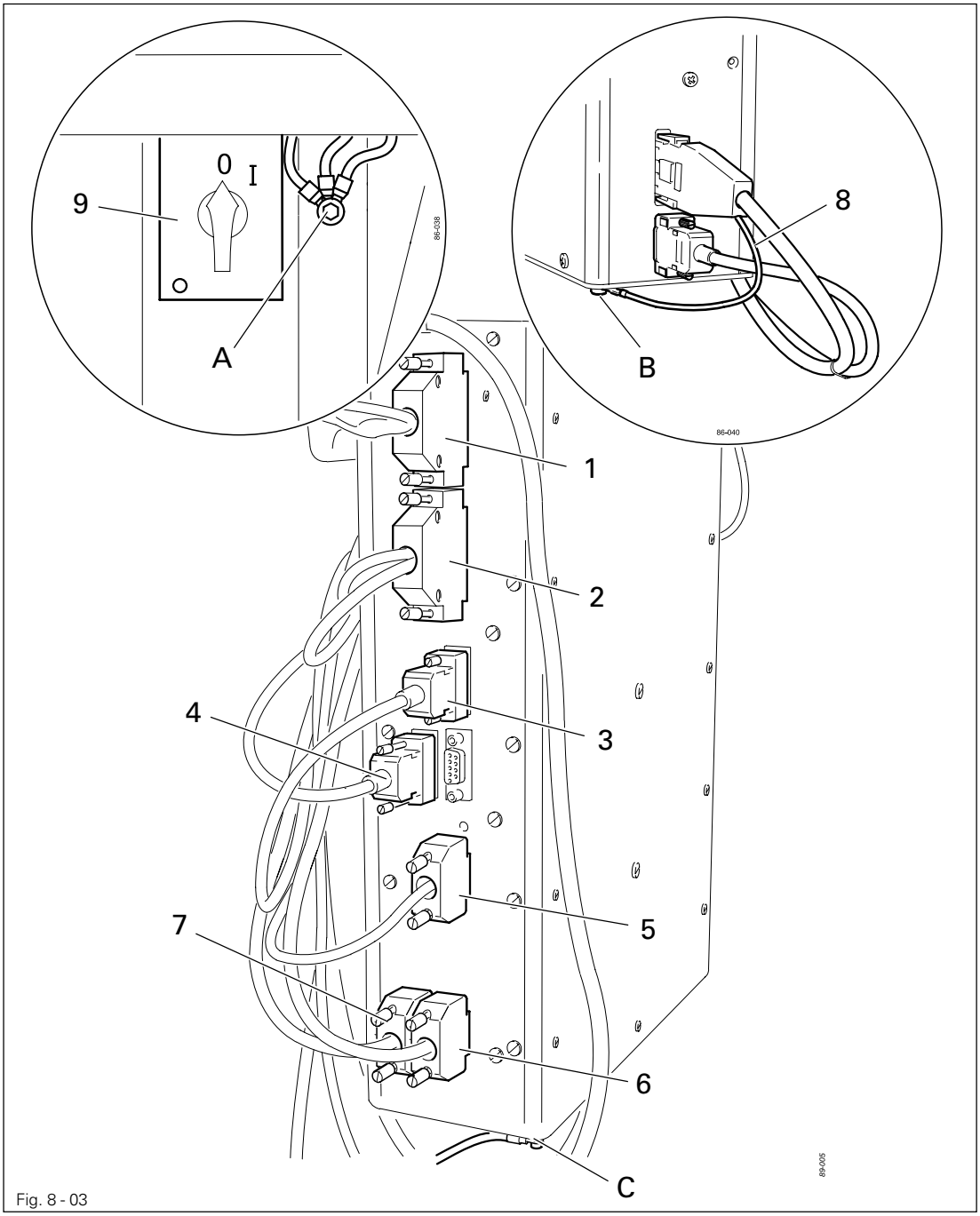

Fig. 8 - 03

- Connect plugs 1-7 as labelled to the control box.
- Screw the earth cable from the sewing head to earth point A.
- Screw the earth cable 8 from the motor to earth point B.
- Connect earth point C and earth point A with an earth cable.
- Fasten the earth cable of the main switch 9 to earth point A.

8.02 Commissioning

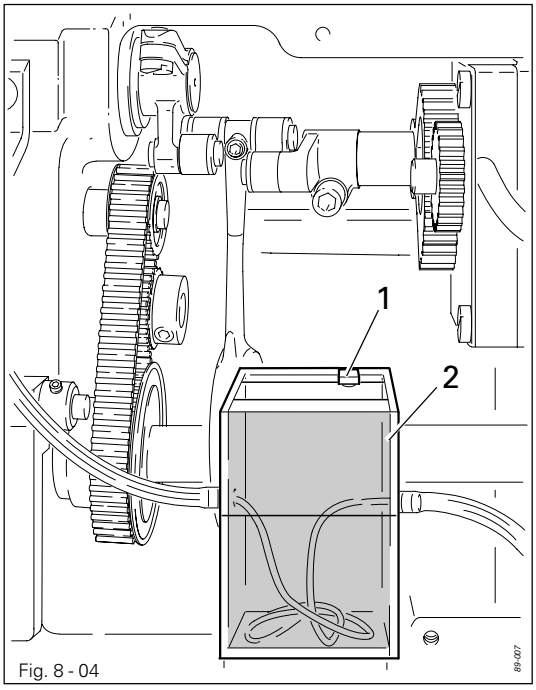

Fig. 8 - 04

- Before commissioning the machine remove plug **1** from the oil tank **2**.

Danger of damage to the machine!
Plug **1** serves as a safety device for transportation and should not be used during sewing operations.

- Examine the machine, in particular the electric cables for any damage.
- Clean the machine thoroughly, see also **Chapter 12 Care and Maintenance.**
- Have qualified personnel check whether the machine can be operated with the available voltage and whether it is connected properly. If there are any irregularities do not operate the machine under any circumstances.

8.03 Switching the machine on/off

- Switch the machine on or off (see **Chapter 7.01 On/off switch).**

8.04 Start inhibitor

8.04.01 Mounting the start inhibitor

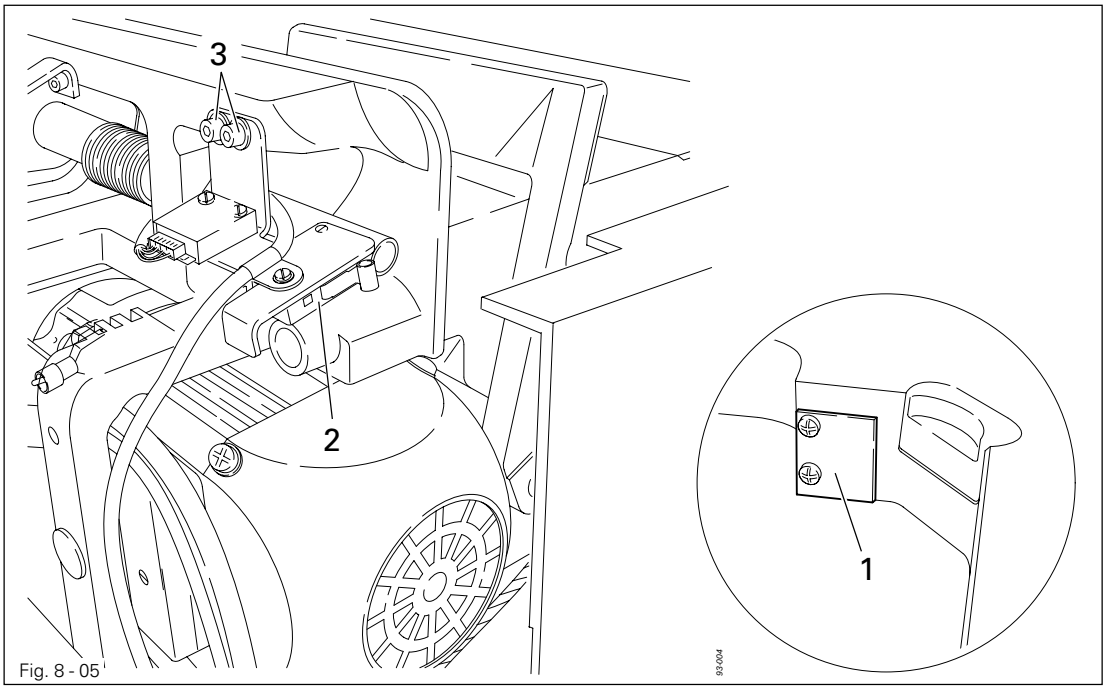

Fig. 8 - 05

- For machines delivered without a table, the plate **1** from the accessories should be mounted, so that it is on a level with the bottom edge of the table top and with the left edge of the table top cutout.
- Set the machine into the table top.
- After loosening screws **3**, move switch **2** until it is touching plate **1**.
- In this position tighten screws **3**.

8.04.02 Checking the function of the start inhibitor

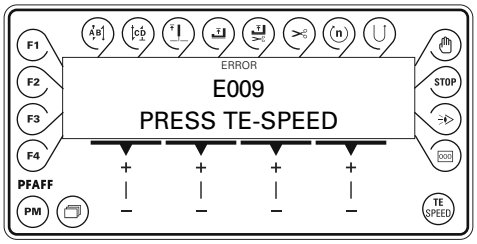

- Switch the machine on at the main switch and tilt it over.
  The error message "E009" must appear on the control panel.
- If the message does not appear, check the setting of the start inhibitor as described in **Chapter 8.01.04 Mounting the start inhibitor.**



- Set the sewing head upright and acknowledge the error message.
  The machine is ready for operation again.

8.05 Table top cutout

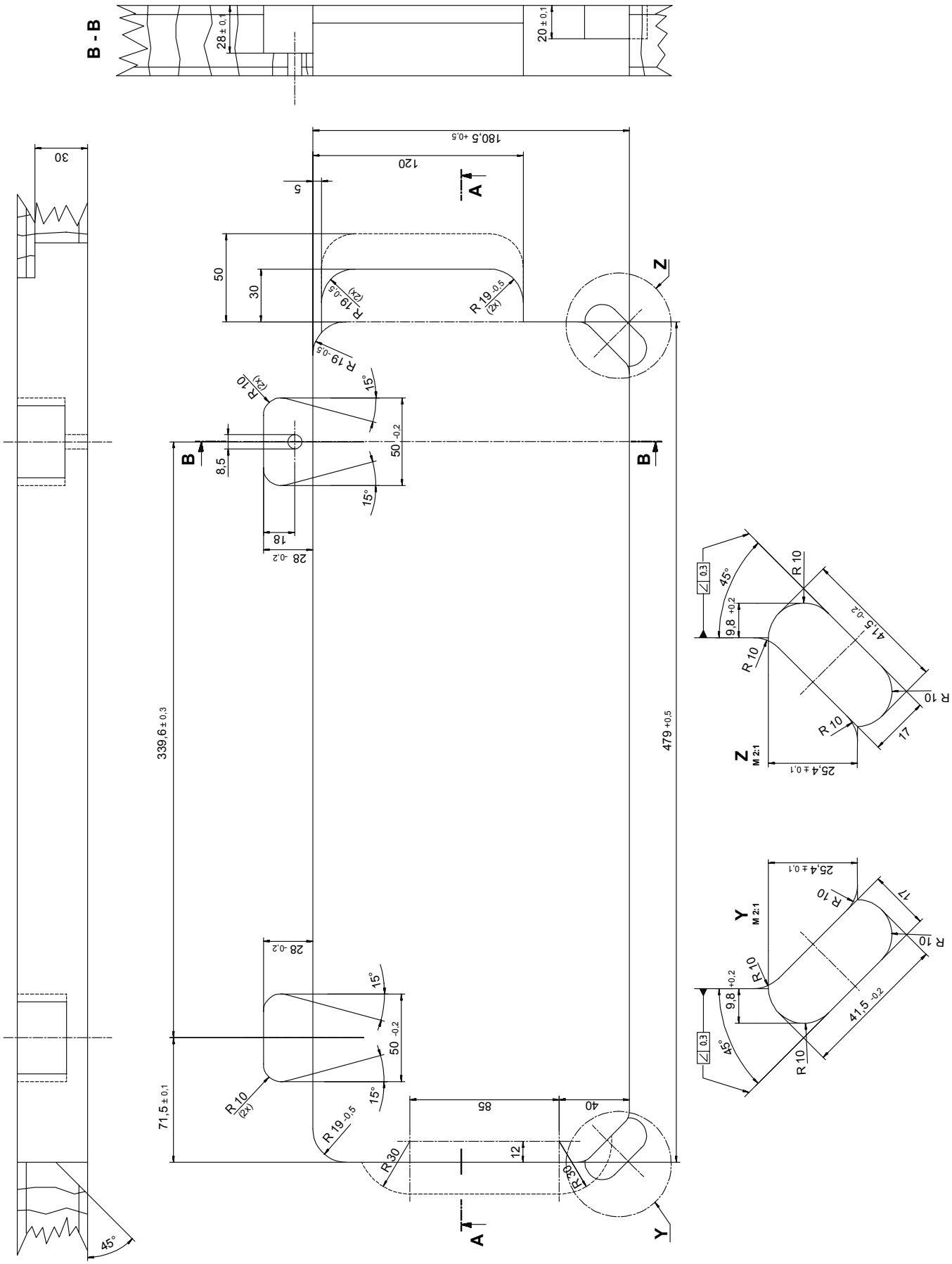

9 Preparation

All regulations and instructions in this Instruction Manual are to be observed! Special attention is to be paid to the safety regulations!

All preparation work is only to be carried out by appropriately trained personnel. Before all preparation work, the machine is to be separated from the electricity supply by removing the plug from the mains or switching off the On/Off switch!

9.01 Inserting the needle

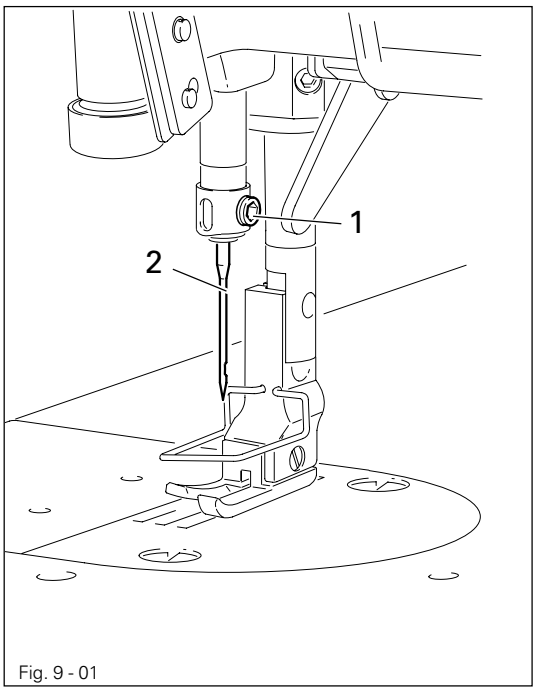

Fig. 9 - 01

Switch off the machine! Danger of injury due to unintentional starting of the machine!

Use only system 134 needles.

- Raise needle bar.
- Loosen screw 1 and insert needle 2 until you feel it stop.
- Tighten screw 1.

The selection of the correct needle depends on the model of the machine and the material and threads being sewn (see chapter 3 Specifications).

9.02 Winding the bobbin thread, adjusting the thread tension

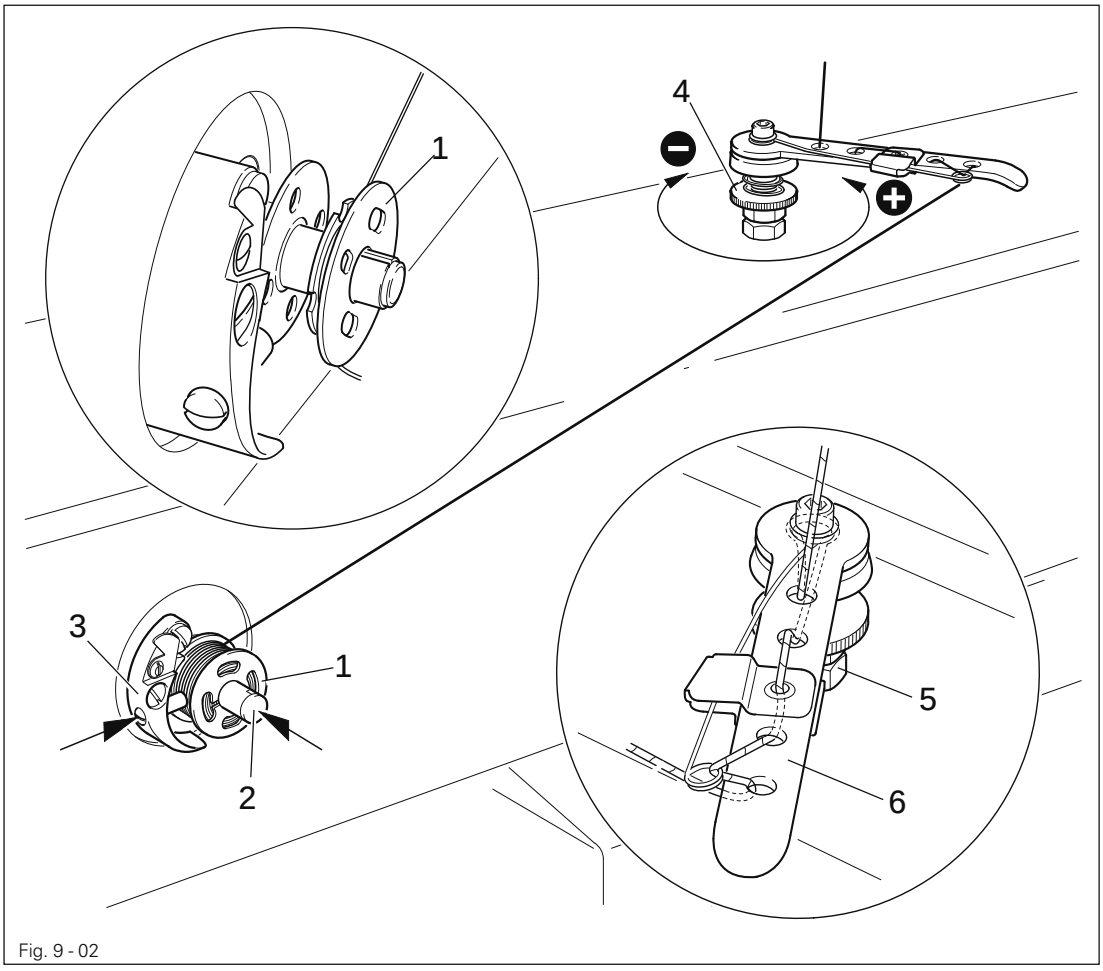

Fig. 9 - 02

- Fit empty bobbin 1 onto bobbin winder spindle 2 with the rest thread chamber on the outside.
- Thread the thread as shown in the above illustration and wind it round the bobbin 1 a few times in an anti-clockwise direction.
- Switch on the bobbin winder by pressing bobbin winder spindle 2 and lever 3 simultaneously.

The bobbin fills up during sewing.

If the machine is only run for bobbin winding (without sewing), a hook base must be fitted in the hook.
Otherwise a jammed thread may damage the hook!

- The tension of the thread on bobbin 1 can be adjusted with knurled screw 4.
- The bobbin winder stops automatically when bobbin 1 is full.

If the thread is wound unevenly:

- Loosen nut 5.
- Turn thread guide 6 accordingly.
- Tighten nut 5..

9.03 Removing/Inserting the bobbin case

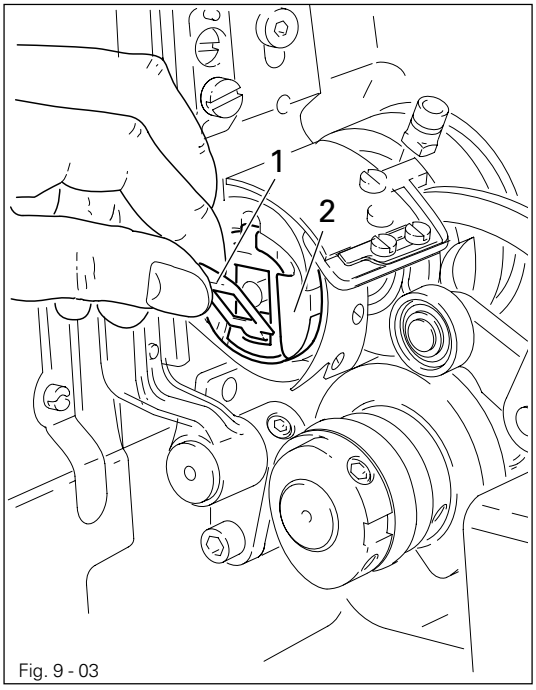

Fig. 9 - 03

Switch off the machine!
Danger of injury due to unintentional starting of the machine!

Removing the bobbin case:

- Tilt back the machine.
- Raise latch **1** and remove bobbin case **2**.

Inserting the bobbin case:

- Press bobbin case **2** until you feel it snap into the bobbin case base.

Return the machine to its upright position using **both** hands!
Danger of injury by crushing between the machine and the table top!

9.04 Inserting the bobbin in the bobbin case

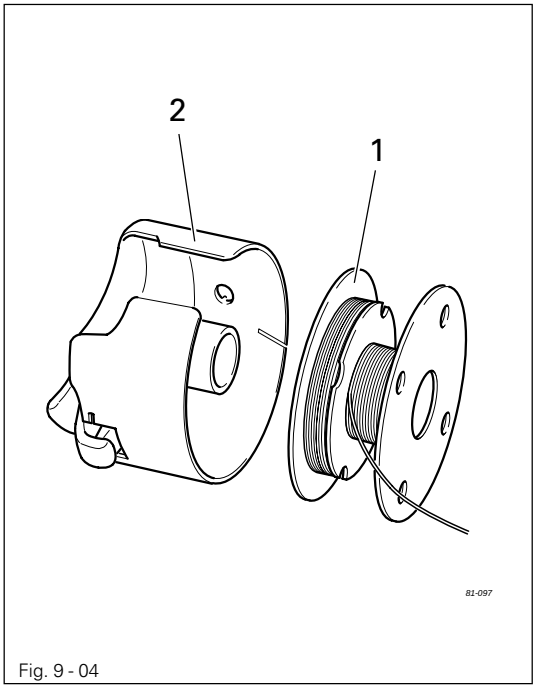

Fig. 9 - 04

- Insert bobbin **1** into the bobbin case **2** as shown in the opposite illustration.

9.05 Threading the bobbin case / Adjusting the bobbin thread tension

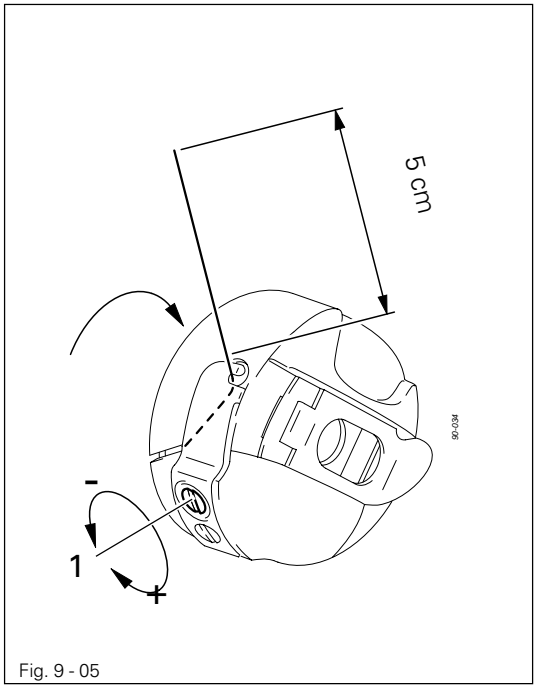

Fig. 9 - 05

- Pass the thread through the slot under the spring as shown in the opposite illustration.
- Adjust the thread tension by turning screw **1**.

When the thread is pulled, the bobbin must rotate in the direction of the arrow.

9.06 Threading the needle thread / Adjusting the needle thread tension

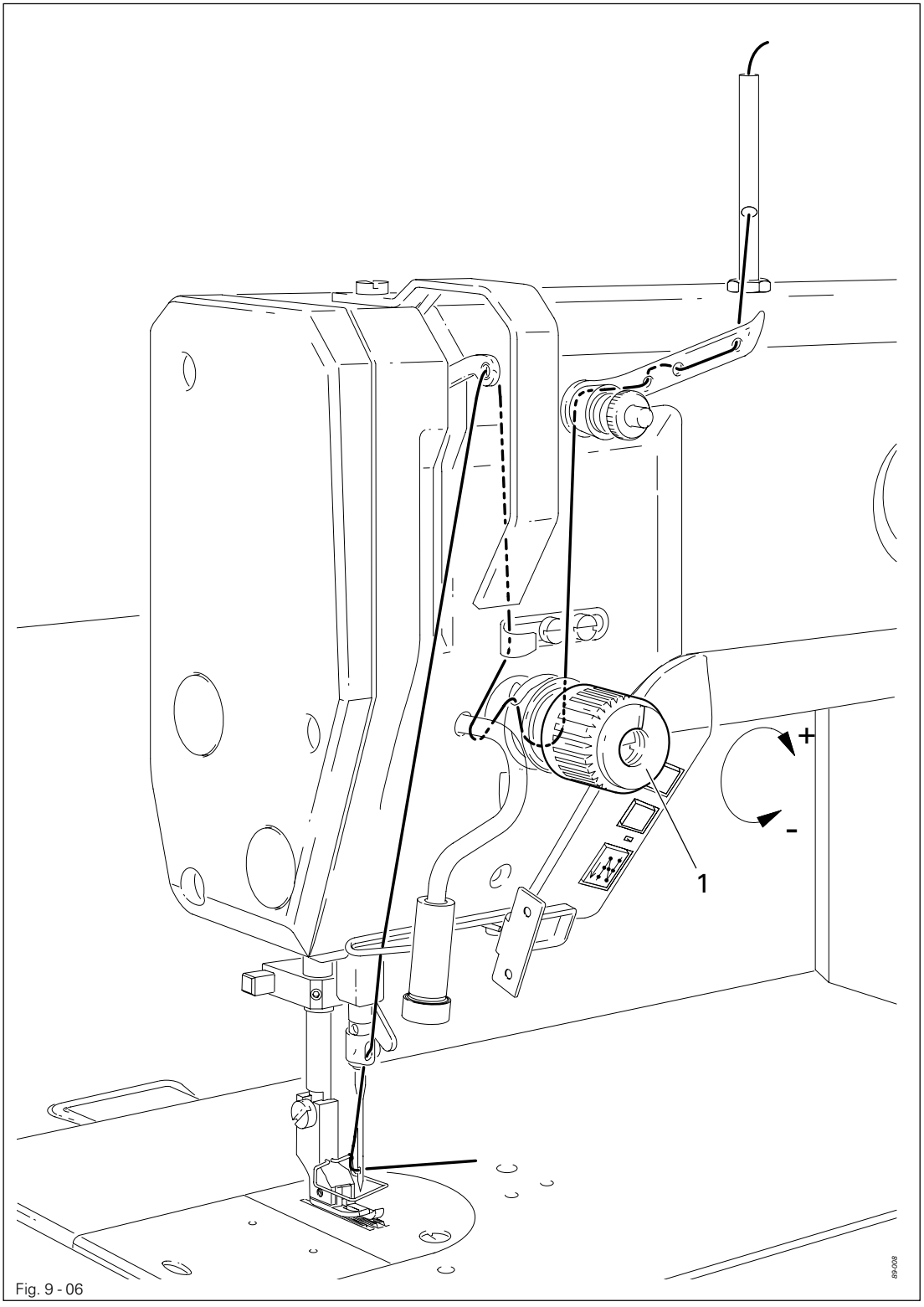

Fig. 9 - 06



Switch off the machine!
Danger of injury due to unintentional starting of the machine!

- Thread the machine as shown in **Fig. 9-06**.
- Adjust the needle thread tension by turning disk **1**.

9.07 Entering the stitch length

- Switch on the machine.
  After the machine has been switched on, the current stitch length is displayed.

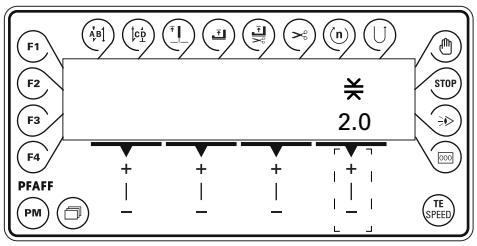

- Adjust the stitch length by pressing the corresponding +/- key.

9.08 Entering the maximum speed

- Switch on the machine.

TE SPEED

- Press the **TE/Speed** key to call up the input menu for the maximum speed.
  The status texts "Speed" and "TE" appear on the display.

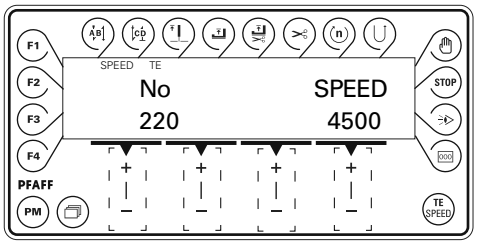

SPEED

- Set the maximum speed by pressing the corresponding +/- key.

9.09 Entering the start and end backtacks

- Switch on the machine.

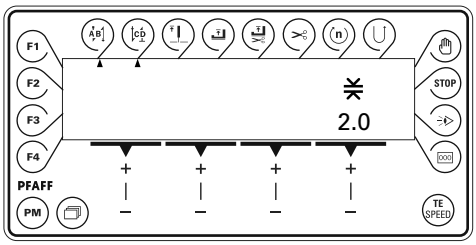

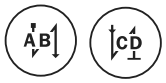

- Switch on the corresponding function by pressing the **start backtack** and/or **end backtack** keys. (Arrow appears under the corresponding function key.)



- Change to the input menu for start and end backtacks by pressing the **scroll** key.

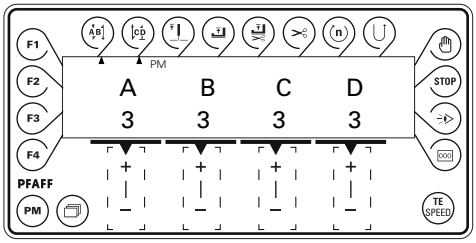

A
- By pressing the corresponding **+/- key** select the desired value for the number of forward stitches (A) of the start backtack.

B
- By pressing the corresponding **+/- key** select the desired value for the number of reverse stitches (B) of the start backtack.

C
- By pressing the corresponding **+/- key** select the desired value for the number of reverse stitches (C) of the end backtack.

D
- By pressing the corresponding **+/- key** select the desired value for the number of forward stitches (D) of the end backtack.



- Call up the stitch length input menu again by pressing the **scroll** key.

9.10 Setting the remaining stitches for the bobbin thread control

When the bobbin thread monitor signals that the bobbin thread has been used up, there is still a little thread on the bobbin.

- Switch on the machine.

2 x TE SPEED

- Press the **TE/Speed** key twice to enter the parameter input function.

- Select mechanic level "B", see **Chapter13.11.02 Selecting the user level.**

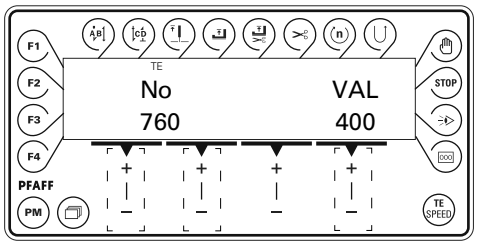

No

- Select the parameter "760" by pressing the corresponding **+/- key**.

VAL

- By pressing the corresponding **+/- key** set the number of remaining stitches which can still be sewn after the detection of the bobbin thread monitor (depends on the thread size).

TE SPEED

- By pressing the **TE/Speed** key the value is taken over and the machine changes to the sewing mode.

The bobbin thread rest counter can only be used when parameter "660" is set at "1", see **Chapter 13.11 Parameter settings.**

10 Sewing

In the sewing mode all relevant settings for the sewing operation are displayed. Functions can be switched on or off by pressing a key. Values for the most important parameters can be changed directly.
In this mode a difference is made between **manual sewing** and **programmed sewing.** To change from manual to programmed sewing, press the PM key. In programmed sewing the text "PM" appears on the display. The program numbers 1 – 15 can each be used for one seam program with up to 15 seam sections.

PM

10.01 Manual sewing

PM

After the machine has been switched on (**Chapter 7.01 Main switch**) and the manual sewing mode has been selected with the **PM** key, the display appears for entering the stitch length, also see **Chapter 9.07 Entering the stitch length.**

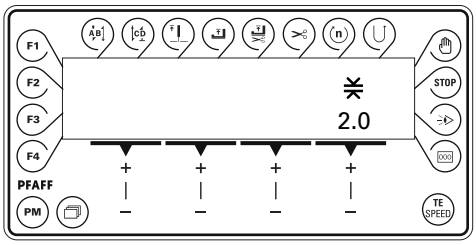

If the backtack function is switched on, the display appears for entering the backtack values, also see **Chapter 9.09 Entering the start and end backtacks.**
It is possible to switch from one display to the other by pressing the **scroll** key.

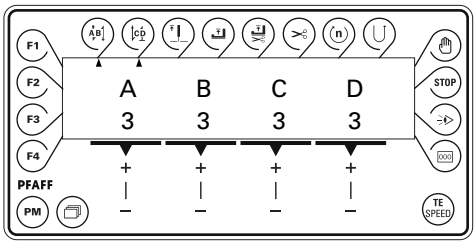

Further functions in manual sewing, also see **Chapter 7.07.02 Function keys:**

	Start backtacks on/off		Presser foot raised at end of seam on/off
	End backtacks on/off		Thread trimming on/off
	Needle position raised on/off		Reverse sewing on/off
	Presser foot raised on/off		Sensor on/off

Sewing is carried out with the pedal functions, see **Chapter 7.03 Pedal.**

10.02 Programmed sewing

In programmed sewing various seam programs can be called up by selecting the corresponding program number. A number of seam sections with corresponding functions can be allocated to each seam program. The number of possible seam programs and seam sections is set with the parameters "492" or "493", see **Chapter 13.11 Parameter settings.** In addition to just sewing, that is to say working through seam programs, in programmed sewing seam programs can be entered and altered, also see **Chapter 11.01 Entering seam programs.**



After the machine has been switched on (**Chapter 7.01 Main switch**) and the programmed sewing mode has been selected with the **PM** key, the display appears for selecting the program number, seam section and stitch length.

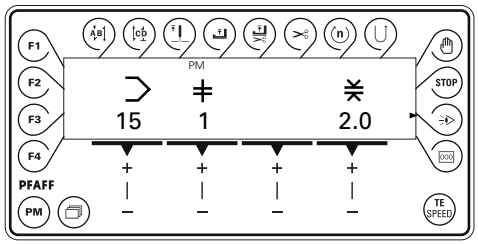



If other functions, such as sensor or stitch count have been activated, it is possible to switch to other displays for entering corresponding values by pressing the **scroll** key.



The number of backtack stitches is set in manual sewing, see **Chapter 9.09 Entering the start and end backtacks.** The values entered apply to all seam programs.

Functions in programmed sewing, also see **Chapter 7.07.02 Function keys:**


Start backtacks on/off


End backtacks on/off


Needle position raised on/off


Presser foot raised on/off


Presser foot raised after thread trimming on/off


Thread trimming on/off


Fixed speed on/off


Reverse sewing direction on/off


Manual seam end on/off



Programmed stop on/off


Sensor on/off



Stitch count on/off

Sewing is carried out with the pedal functions, see **Chapter 7.03 Pedal.**

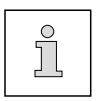

If several seam sections belong to one seam program, the separate seam sections are sewn automatically one after the other.

10.03 Error messages

If a fault occurs, the text "ERROR" appears on the display, together with an error code and short instructions. An error message is caused by incorrect settings, faulty elements or seam programs as well as by overload conditions.
For an explanation of the error codes see **Chapter 13.12 Explanation of the error messages.**

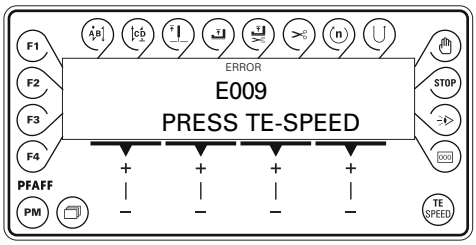

- Correct the error.



- Acknowledge error correction by pressing the **TE/Speed** key.

11 Input

In this chapter the input of seam programs is described.

11.01 Seam program input

- Switch on the machine.

PM

- Press the PM key to call up programmed sewing.
  The text "PM" must appear on the display.

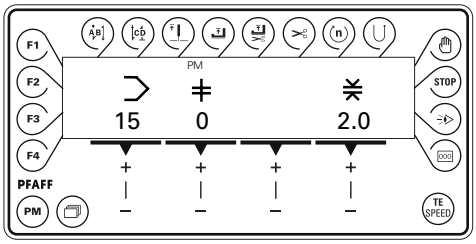

After selecting programmed sewing, seam programs can be entered. The input is carried out by switching functions on or off or by entering values for the seam section of a seam program. All functions available in programmed sewing can be used for the seam program input, see **Chapter 10.02 Programmed sewing.**
The seam program input is described in the following example.

11.02 Example of a seam program input

A seam program consists of the program number and at least one seam section with allocated functions. Below is an example of a seam program input for a spade pocket.

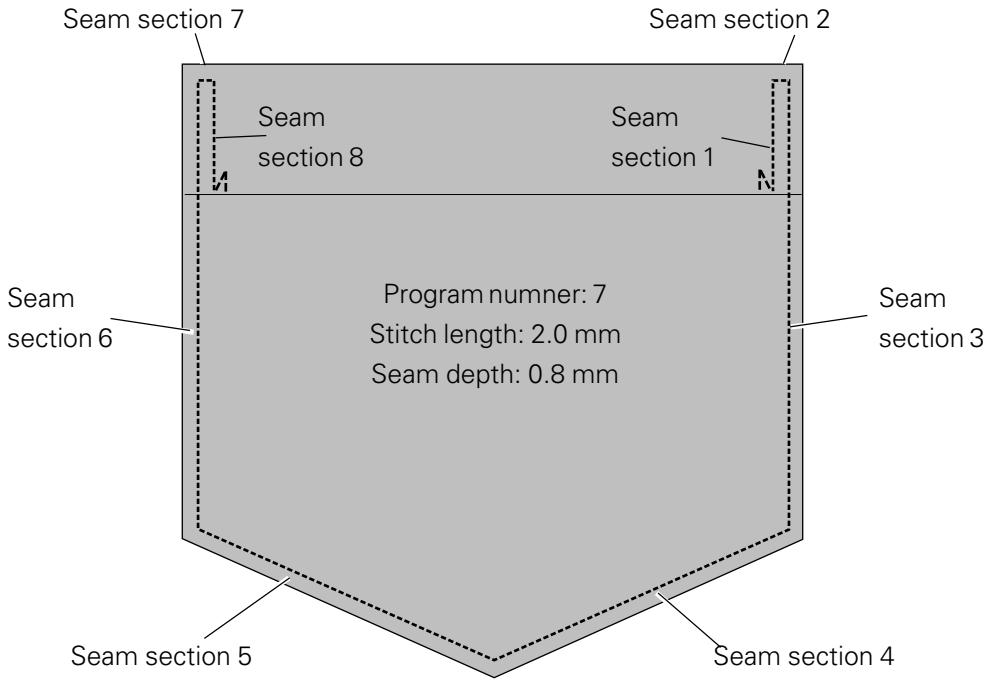

Overview of the input steps (example)

Step				A/B	C/D								STOP		
1	7	0	2.0	-	-	-	-	-	-	-	-	-	-	-	-
2	7	1	2.0	●	-	-	-	-	-	●	-	-	●	-	●/15
3	7	2	2.0	-	-	-	-	-	-	-	-	-	●	-	●/3
4	7	3	2.0	-	-	-	-	-	-	-	-	-	●	●/1.5	-
5	7	4	2.0	-	-	-	-	-	-	-	-	-	●	●/6.0	-
6	7	5	2.0	-	-	-	-	-	-	-	-	-	●	●/1.5	-
7	7	6	2.0	-	-	-	-	-	-	●	-	-	●	●/0.8	-
8	7	7	2.0	-	-	-	-	-	-	-	-	-	●	-	●/3
9	7	8	2.0	-	●	-	-	●	●	-	-	-	●	-	●/15
10	7	9	0.0												

Entering programmed sewing

- Switch on the machine.

PM

- Press the PM key.
  The text "PM" must appear on the display.

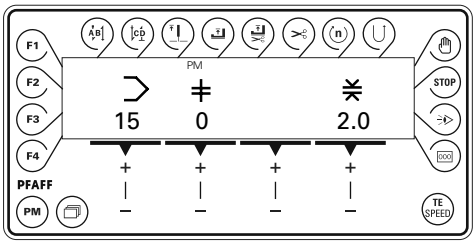

Selecting the program number

- Select program number "7" with the corresponding +/- key.

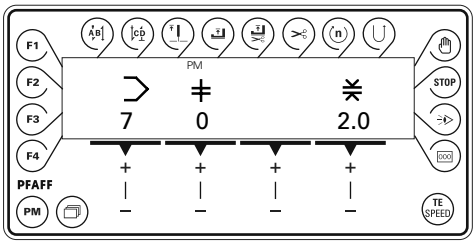

Selecting the stitch length

- Set the value for the stitch length at "2.0" with the corresponding +/- key.

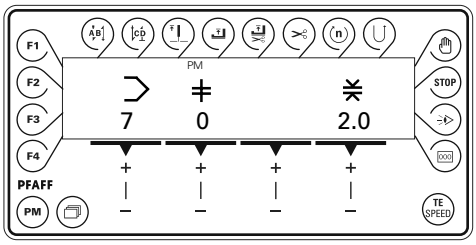

- Press the **scroll** key to select further seam parameters.

The values entered in the seam section "0" apply for all following seam sections, if these are not altered within the individual seam sections.

- Press the **scroll** key to select the first seam section.

Selecting seam section 1

- Select seam section "1" with the corresponding +/- key.

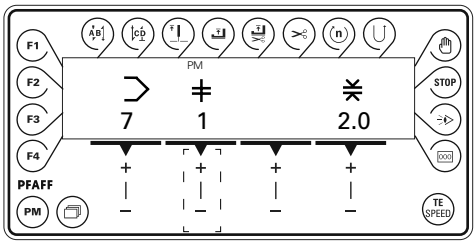

Selecting the functions for seam section 1

- The backtacking function at the beginning of the seam (start backtacks) should be switched on.
- The presser foot should be raised at the end of the seam section.
- The machine should stop at the end of the seam section.
- The end of the seam section should be recognised by stitch counting (15 stitches).
- The seam section should be sewn at a constant speed.

- Press the **start backtack** key to switch on the backtacking function at the beginning of the seam. To enter the number of stitches for start and end backtacks see **Chapter 9.09 Entering start and end backtacks.**

- Press the **programmed stop** key, to stop the machine automatically at the end of the seam section.

- Press the **stitch counting** key to enable recognition of the end of the seam section by the number of stitches.

- Press the **speed** key to sew the seam section at a constant speed (irrespective of the pedal position).

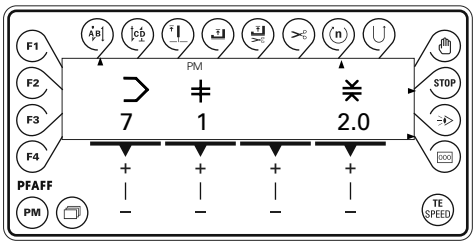



- Press the **scroll** key to enter the number of stitches.

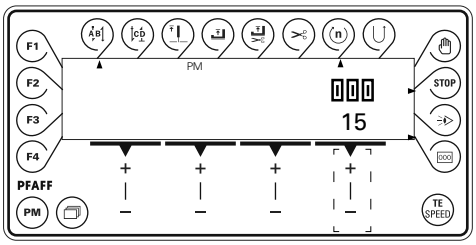



- With the corresponding **+/- key** enter the value "15" for the number of stitches.



- Press the **scroll** key to be able to select the next seam section.

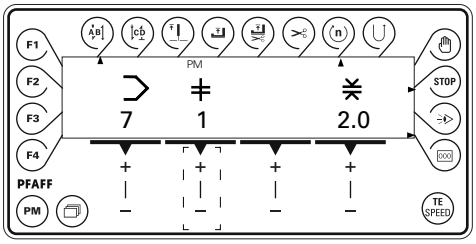

Selecting seam section 2

- Select seam section "2" with the corresponding **+/- key.**

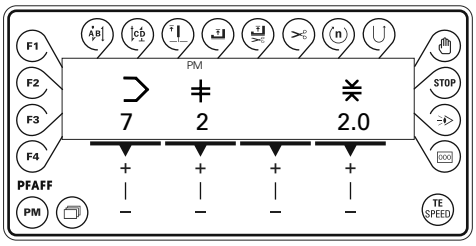

Selecting the functions for seam section 2

- The presser foot should be raised at the end of the seam section.
- The machine should stop at the end of the seam section.
- The end of the seam section should be recognised by stitch counting (3 stitches).
- The seam section should be sewn at a constant speed.



- Press the **programmed stop** key, to stop the machine automatically at the end of the seam section.



- Press the **stitch counting** key to enable recognition of the end of the seam section by the number of stitches.



- Press the **speed** key to sew the seam section at a constant speed (irrespective of the pedal position).

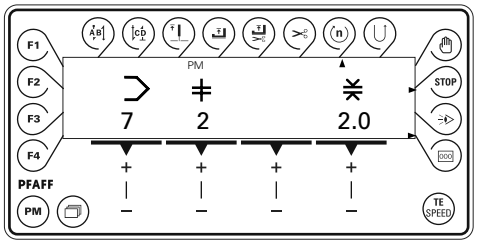



- Press the **scroll** key to enter the number of stitches.

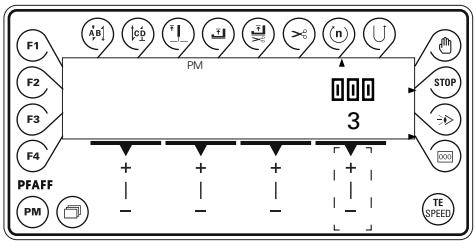



- With the corresponding **+/- key** enter the value "3" for the number of stitches.



- Press the **scroll** key to be able to select the next seam section.

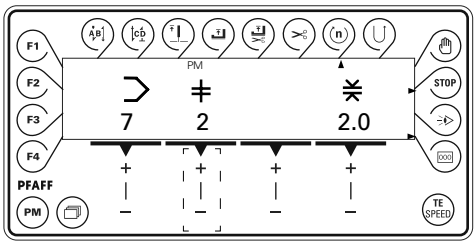

Selecting seam section 3

- Select seam section "3" with the corresponding **+/- key.**

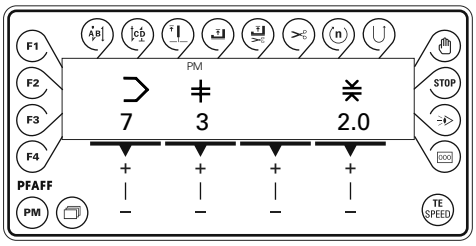

Selecting the functions for seam section 3

- The presser foot should be raised at the end of the seam section.
- The machine should stop at the end of the seam section.
- The end of the seam section should be recognised by sensor (0.8 mm seam depth).



- Press the **programmed stop** key, to stop the machine automatically at the end of the seam section.



- Press the **sensor** key for recognition of the end of the seam section by sensor.

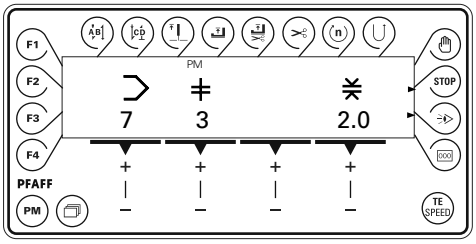



- Press the **scroll** key to enter the seam depth.

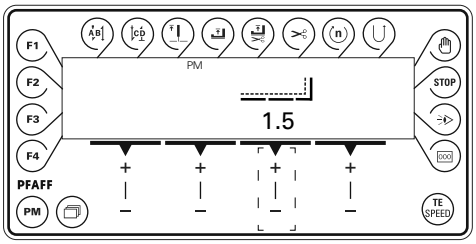



- With the corresponding **+/- key** set the value for the seam depth at "1.5".

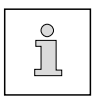

The actual value for the seam depth is made up of the desired seam depth and the appropriate positive or negative correction value, when the angle on the material is not equal to 90°.



- Press the **scroll** key to be able to select the next seam section.

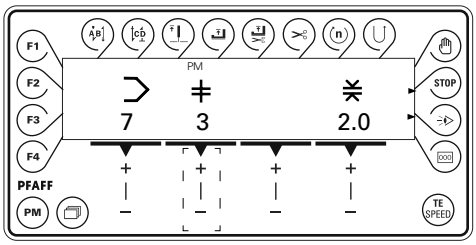

Selecting seam section 4

- Select seam section "4" with the corresponding **+/- key.**

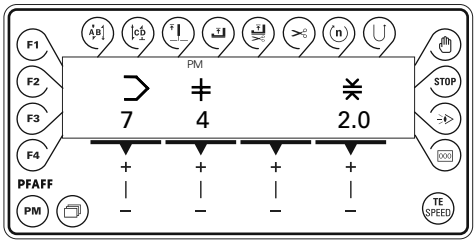

Selecting the functions for seam section 4

- The presser foot should be raised at the end of the seam section.
- The machine should stop at the end of the seam section.
- The end of the seam section should be recognised by sensor (0.8 mm seam depth).



- Press the **programmed stop** key, to stop the machine automatically at the end of the seam section.



- Press the **sensor** key for recognition of the end of the seam section by sensor.

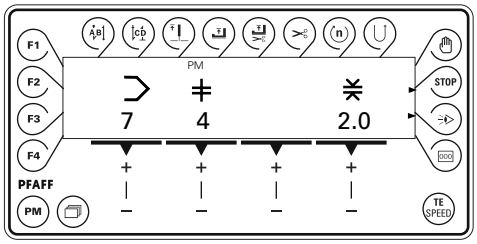



- Press the **scroll** key to enter the seam depth.

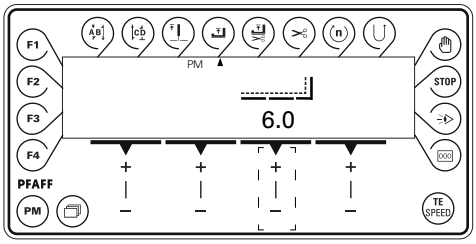

- With the corresponding **+/- key** set the value for the seam depth at "6.0".

The actual value for the seam depth is made up of the desired seam depth and the appropriate positive or negative correction value, when the angle on the material is not equal to 90°.

- Press the **scroll** key to be able to select the next seam section.

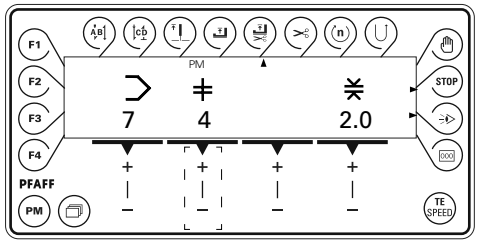

Selecting seam section 5

- Select seam section "5" with the corresponding **+/- key.**

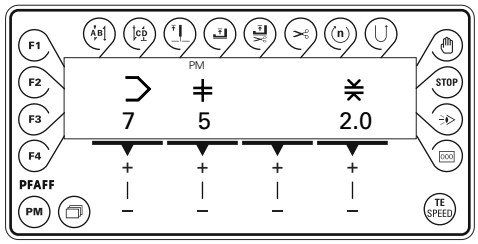

Selecting the functions for seam section 5

- The presser foot should be raised at the end of the seam section.
- The machine should stop at the end of the seam section.
- The end of the seam section should be recognised by sensor (0.8 mm seam depth).

- Press the **programmed stop** key, to stop the machine automatically at the end of the seam section.

- Press the **sensor** key for recognition of the end of the seam section by sensor.

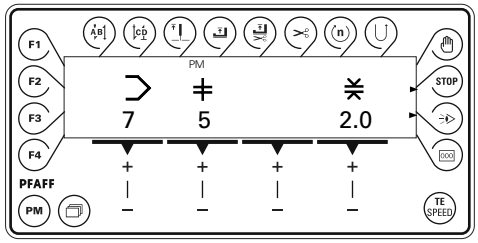

- Press the **scroll** key to enter the seam depth.

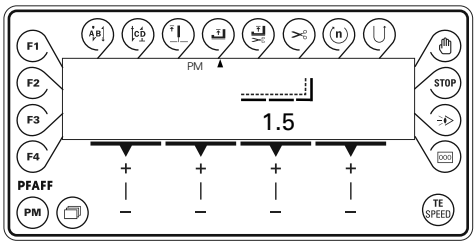

- With the corresponding **+/- key** set the value for the seam depth at "1.5".

The actual value for the seam depth is made up of the desired seam depth and the appropriate positive or negative correction value, when the angle on the material is not equal to 90°.

- Press the **scroll** key to be able to select the next seam section.

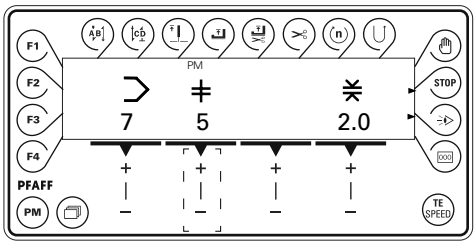

Selecting seam section 6

- Select seam section "6" with the corresponding **+/- key.**

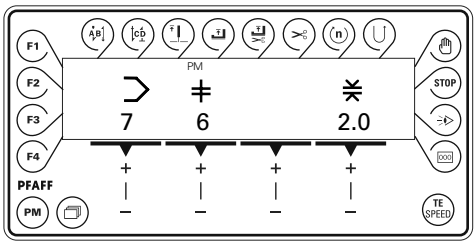

Selecting the functions for seam section 6

- The presser foot should be raised at the end of the seam section.
- The machine should stop at the end of the seam section.
- The end of the seam section should be recognised by sensor (0.8 mm seam depth).

- Press the **programmed stop** key, to stop the machine automatically at the end of the seam section.

- Press the **sensor** key for recognition of the end of the seam section by sensor.

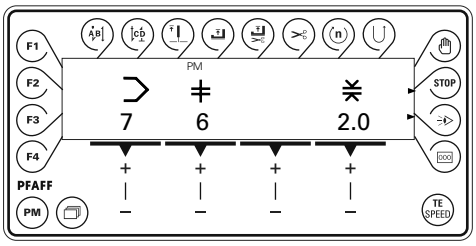

- Press the **scroll** key to enter the seam depth.

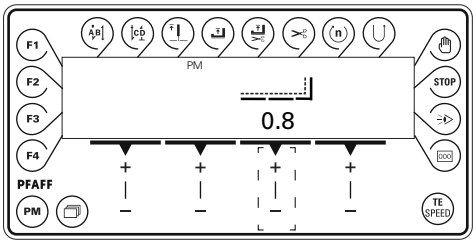

- With the corresponding **+/- key** set the value for the seam depth at "0.8".

The actual value for the seam depth is made up of the desired seam depth and the appropriate positive or negative correction value, when the angle on the material is not equal to 90°.

- Press the **scroll** key to be able to select the next seam section.

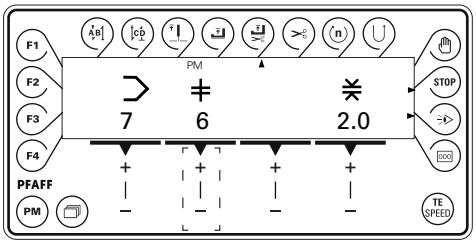

Selecting seam section 7

- Select seam section "7" with the corresponding **+/- key.**

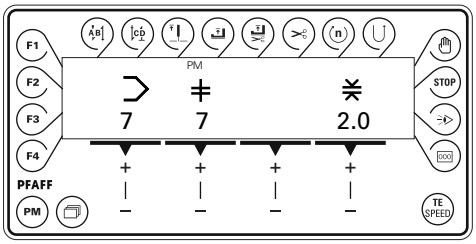

Selecting the functions for seam section 7

- The presser foot should be raised at the end of the seam section.
- The machine should stop at the end of the seam section.
- The end of the seam section should be recognised by stitch counting (3 stitches).
- The seam section should be sewn at a constant speed.



- Press the **programmed stop** key, to stop the machine automatically at the end of the seam section.



- Press the **stitch counting** key to enable recognition of the end of the seam section by the number of stitches.



- Press the **speed** key to sew the seam section at a constant speed (irrespective of the pedal position).

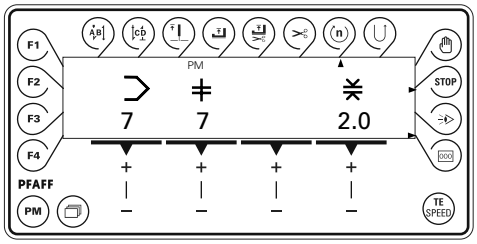



- Press the **scroll** key to enter the number of stitches.

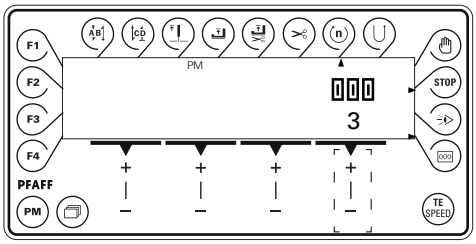



- With the corresponding **+/- key** enter the value "3" for the number of stitches.



- Press the **scroll** key to be able to select the next seam section.

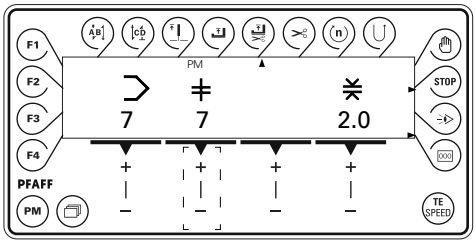

Selecting seam section 8

- Select seam section "8" with the corresponding **+/- key.**

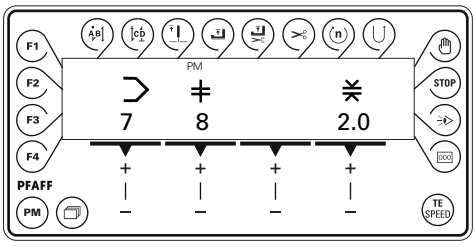

Selecting the functions for seam section 8

- The backtacking function at the end of the seam (end backtacks) should be switched on.
- The thread should be trimmed at the end of the seam section.
- The presser foot should be raised after thread trimming.
- The machine should stop at the end of the seam section.
- The end of the seam section should be recognised by stitch counting (15 stitches).
- The seam section should be sewn at a constant speed.

- Press the **end backtack** key to switch on the backtacking function at the end of the seam. To enter the number of stitches for start and end backtacks see **Chapter 9.09 Entering start and end backtacks.**

- Press the **foot position after trimming** key to raise the presser foot after thread trimming.

- Press the **programmed stop** key, to stop the machine automatically at the end of the seam section.

- Press the **thread trimming** key to trim the thread automatically at the end of the seam section.

- Press the **stitch counting** key to enable recognition of the end of the seam section by the number of stitches.

- Press the **speed** key to sew the seam section at a constant speed (irrespective of the pedal position).

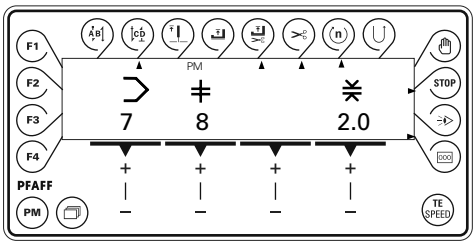

- Press the **scroll** key to enter the number of stitches.

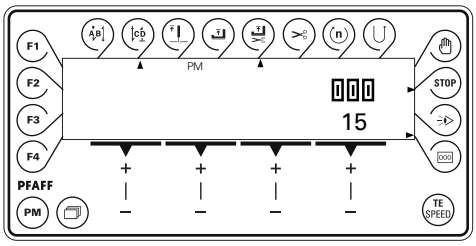

- With the corresponding **+/- key** enter the value "15" for the number of stitches.

- Press the **scroll** key to be able to select the next seam section.

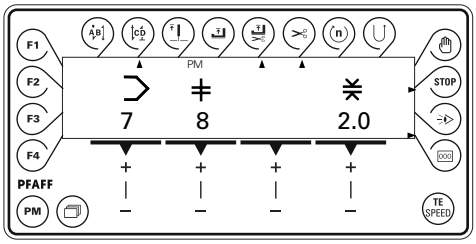

Closing the seam program

- Select seam section "9" with the corresponding **+/- key.**

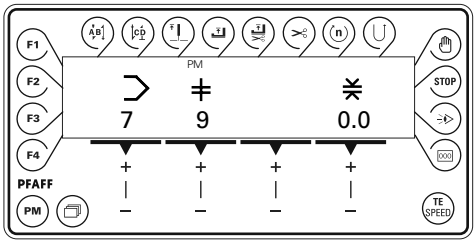

- With the corresponding **+/- key** set the value for the stitch length at "0.0".

By setting the stitch length in seam section **9** at zero, seam section **8** is recognised as the last seam section of the seam program and the seam program input is concluded.

Sewing a test seam

- With the corresponding **+/- key** select the seam section "0" or "1".

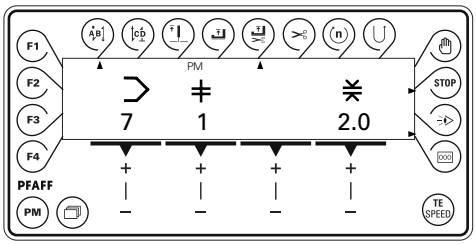

- Using the pedal functions, sew a test seam.

11.03 Forms for recording programs

Step				A/B	C/D								STOP		000
1															
2															
3															
4															
5															
6															
7															
8															
9															
10															
11															
12															
13															
14															
15															

Step				A/B	C/D								STOP		000
1															
2															
3															
4															
5															
6															
7															
8															
9															
10															
11															
12															
13															
14															
15															

Step				A/B	C/D								STOP		000	
1																
2																
3																
4																
5																
6																
7																
8																
9																
10																
11																
12																
13																
14																
15																

Step				A/B	C/D								STOP		000	
1																
2																
3																
4																
5																
6																
7																
8																
9																
10																
11																
12																
13																
14																
15																

12 Care and Maintenance

Cleaning	daily, several times if in continuous operation
Checking the oil level	every 3 months ▲

▲ These maintenance intervals are calculated for the average running time of a single shift operation. If the machine is operated more than this, shorter intervals are recommended.

12.01 Cleaning the machine



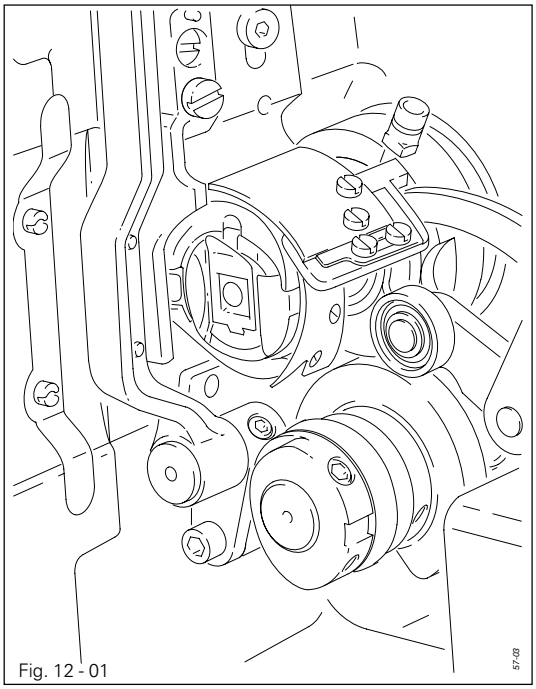

Fig. 12 - 01



Switch off the machine!
Danger of injury due to unintentional starting of the machine!

- Tilt back the machine.
- Clean the hook and hook compartment daily, more often if in continuous operation.



Return the machine to its upright position using **both** hands!
Danger of injury by crushing between the edge of the machine and the table top!

12.02 Topping up the oil tank



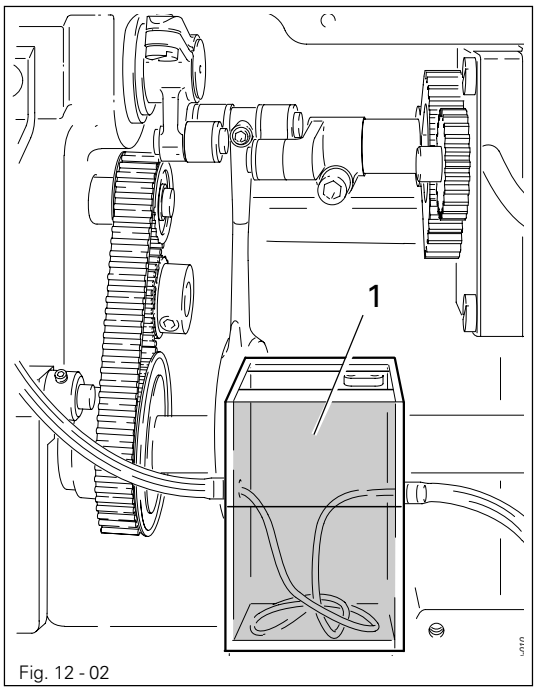

Fig. 12 - 02



The oil reservoir must always have oil in it.

- Whenever it is necessary to refill the reservoir, tilt back the machine and let it rest on the sewing head support.
- Fill oil through hole **1** into the reservoir **2** up to the level of the front edge (see arrow).



Return the machine to its upright position using **both** hands!
Danger of injury by crushing between the machine and the table top!



Only use oil with a mean viscosity of 10.0 mm^2/s at 40°C and a density of 0.847 g/cm^3 at 15°C.

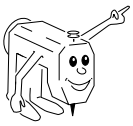

We recommend PFAFF sewing machine oil, part no. 280-1-120 105.

13 Adjustment



No C-clamp should be fastened to the needle bar of the PFAFF 2483-980/31.
This could cause damage to the special coating of the needle bar.

13.01 Notes on adjustment

All following adjustments are based on a fully assembled machine and may only be carried out by expert staff trained for this purpose.
Machine covers, which have to be removed and replaced to carry out checks and adjustments, are not mentioned in the text.
The order of the following chapters corresponds to the most logical work sequence for machines which have to be completely adjusted. If only specific individual work steps are carried out, both the preceding and following chapters must be observed.
Screws, nuts indicated in brackets ( ) are fastenings for machine parts, which must be loosened before adjustment and tightened again afterwards.



Unless stated otherwise, during all adjustment work the machine must be disconnected from the electric and pneumatic power supply!
Danger of injury if the machine is started accidentally!

13.02 Tools, gauges and other accessories

- 1 set of screwdrivers with blade widths from 2 to 10 mm
- 1 set of wrenches with jaw widths from 7 to 14 mm
- 1 set of Allen keys from 1.5 to 6 mm
- 1 metal ruler, part no. 08-880 218-00
- 1 feed dog adjustment gauge, part no. 61-111 639-71
- 1 locking pin (5 mm diameter), part no. 13-033 346-05
- 1 adjustment gauge, part no. 61-111 639-70
- 1 adjustment gauge for tightening the belt of the hook drive, part no. 61-111 639-76
- Threads and test material

13.03 Abbreviations

TDC = top dead center
BDC = bottom dead center

13.04 Checking and adjusting aids

With the aid of blocking pin **1** (part No. 13-033346-05) and if necessary adjustment gauge **3** (part No. 61-111 639-70) the machine can be blocked in the following positions for adjustment

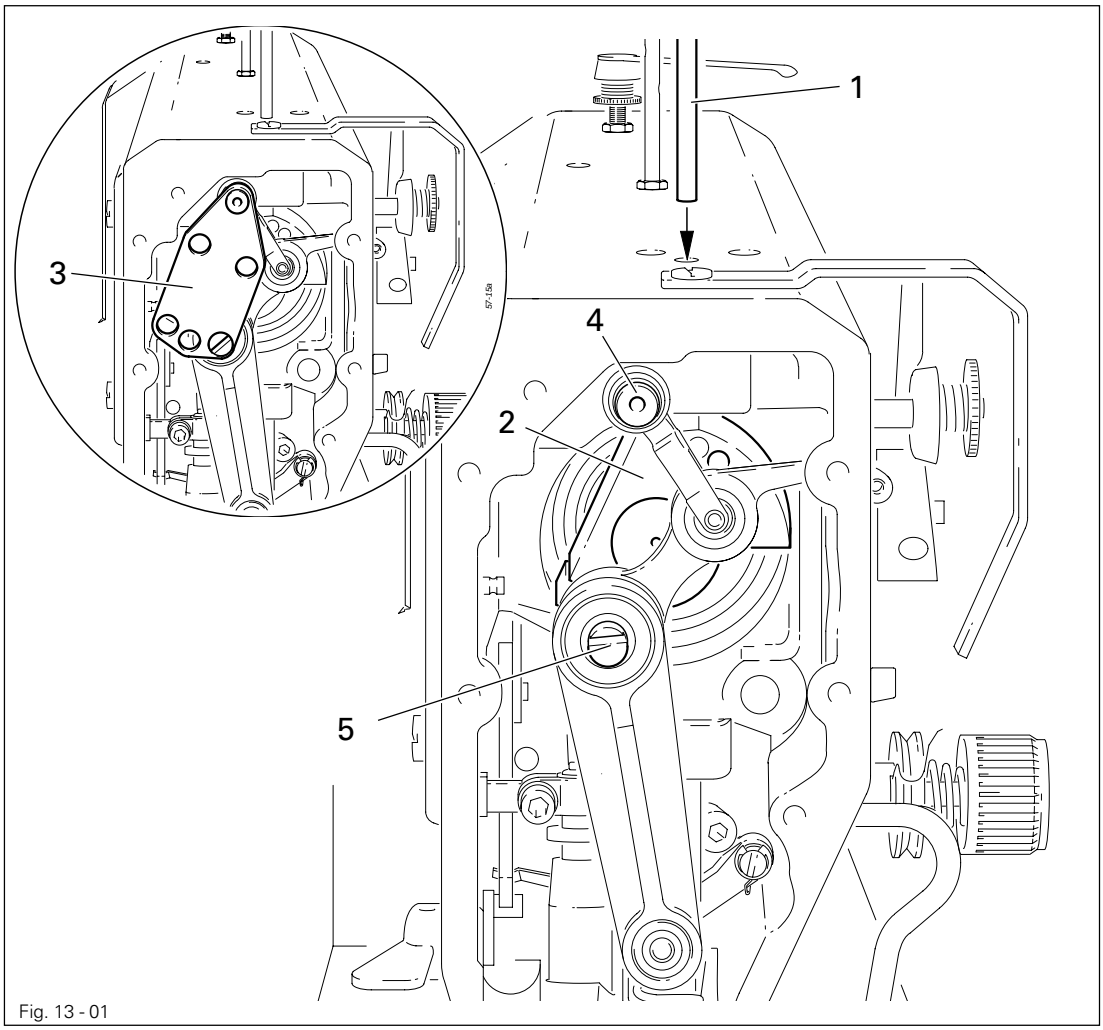

Fig. 13 - 01

Needle bar position 1.8 mm past b.d.c.

- Turn balance wheel until needle bar is roughly in required position
- Insert blocking pin **1** in hole
- Turn balance wheel slightly back and forth until blocking pin engages crank **2**

Needle bar position 0.6 mm past t.d.c.

- Set needle bar roughly at required position
- Place adjustment gauge **3** onto pins **4** and **5**, making sure right side is used (for 30 or 36 mm needle bar stroke)

Needle bar position 0.6 mm past b.d.c.

- Set needle bar roughly at required position
- Place adjustment gauge **3** onto pins **4** and **5**, making sure right side is used (for 30 or 36 mm needle bar stroke)

13.05 Adjusting the basic machine

13.05.01 Basic position of the machine drive unit

This adjustment is only necessary, if toothed belt **2** was removed.

Requirement
When the needle bar is positioned 0.6 mm past b.d.c., the markings **3** and **4** should be in alignment.

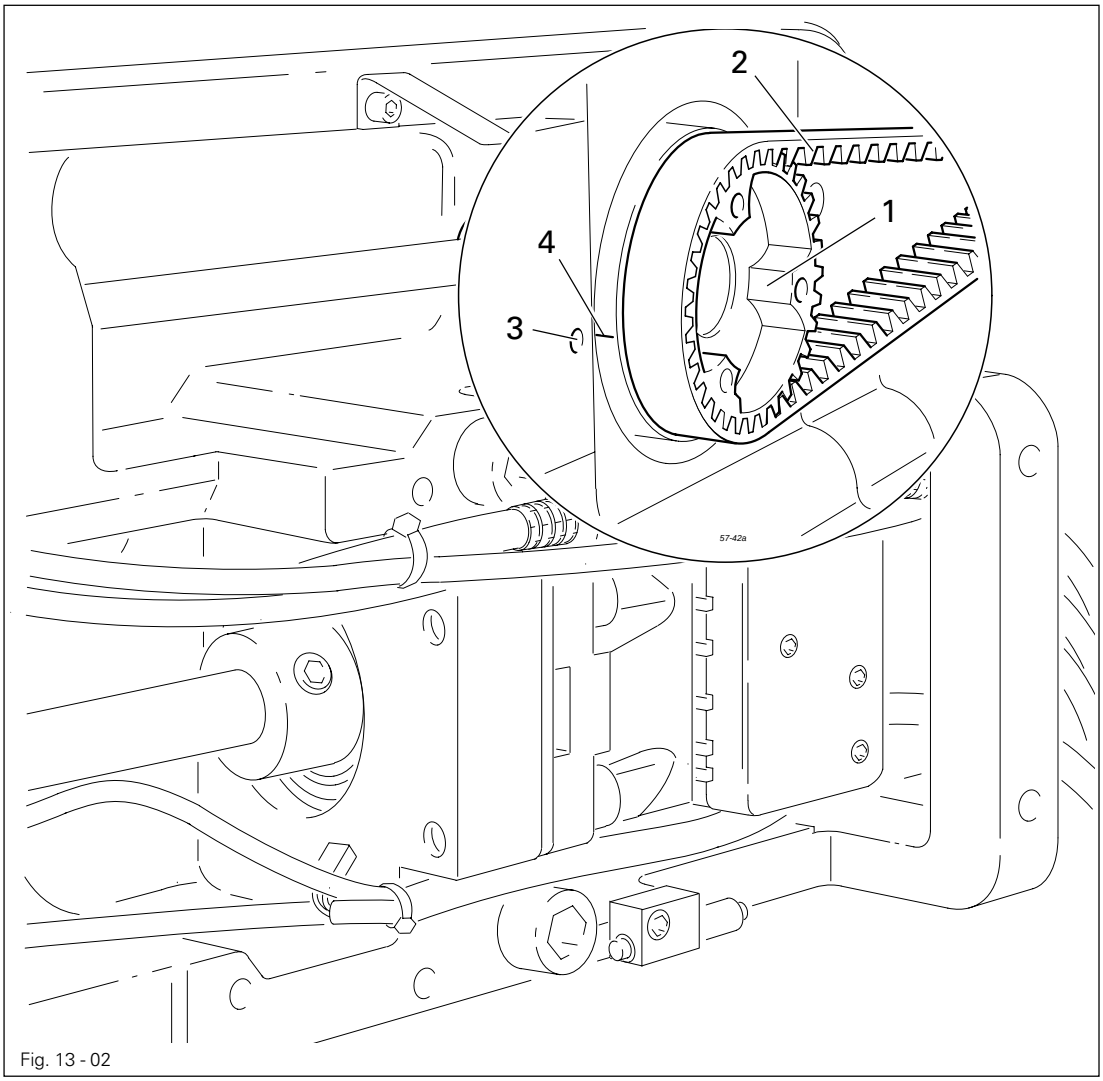

Fig. 13 - 02

- Bring needle bar to 0.6 mm past b.d.c.
- Adjust the toothed belt wheel **1** according to the **requirement** and slide on toothed belt **2**.

When installing the motor pay attention to the correct position of shaft flange, shock absorber and motor flange!

The second screw on the toothed belt wheel **1** is a cornet screw.

13.05.02 Preadjusting the needle height

Requirement
When the needle bar is positioned 1.8 mm above BDC, the mark on the needle bar **1** must be flush with the bottom edge of the needle bar frame **3**.

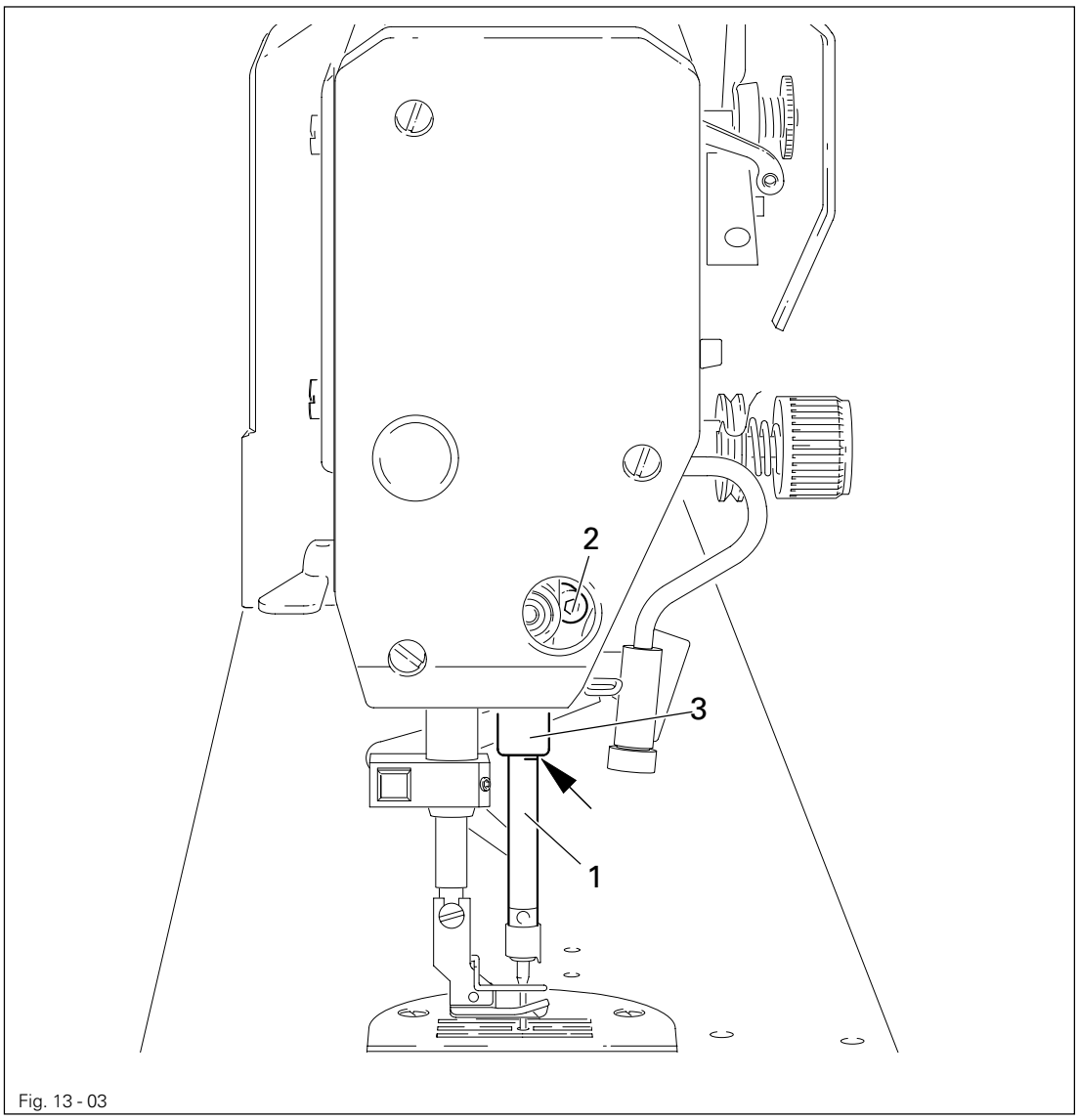

Fig. 13 - 03

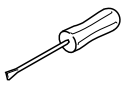

- Set needle bar at 1.8 mm past b.d.c. and block machine with blocking pin, see **Chapter 13.04 Checking and adjusting aids**.
- Move needle bar **1** (screw **2**), without turning it, according to the requirement.

13.05.03 Neutral position of the bottom feed dog

Requirement

With the stitch length set at "0"

1. The marking on the toothed segment **1** should be positioned in the centre of the toothed wheel shaft **3**.
2. Cranks **4** and **6** should be in alignment and there should be no feeding motion of the bottom feed dog when the balance wheel is turned.

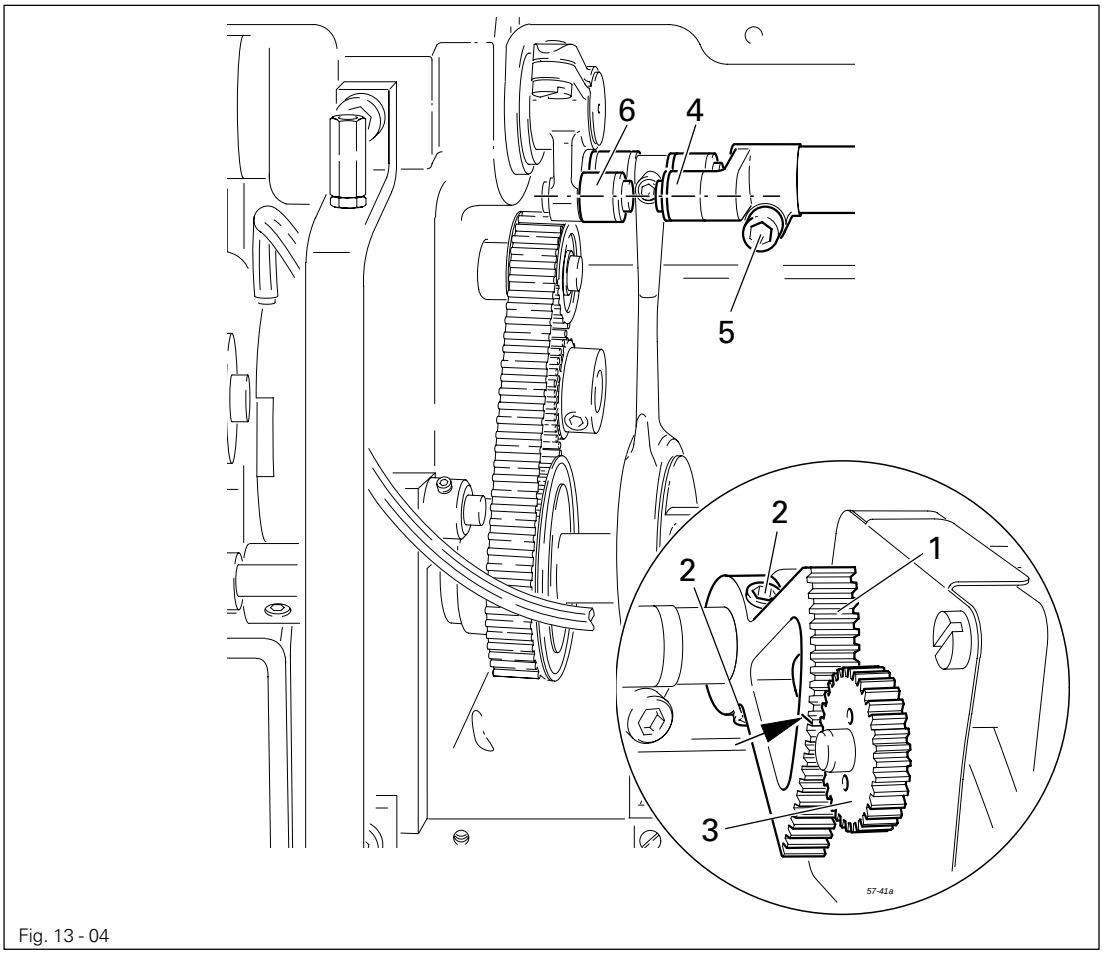

Fig. 13 - 04

Before starting the adjustment, disconnect the pedal rods!
Danger of injury in the machine suddenly starts up!

- Switch on the machine.

- On the control panel set the stitch length at "0" and turn the balance wheel until the stitch length control motor reacts.
- Make sure that parameter **834** is set at "0", see **Chapter 13.11 Parameter settings.**
- Adjust tooth segment **1** (screws **2**) according to **requirement 1,** without turning toothed wheel **3**.
- Adjust crank **4** (screws **5**) according to **requirement 2.**
- Switch off the machine.

13.05.04 Feeding motion of the bottom feed dog

Requirement
With the needle bar positioned **0.6 mm past b.d.c.** the bottom feed dog should not move, when shaft **3** is turned backwards and forwards.

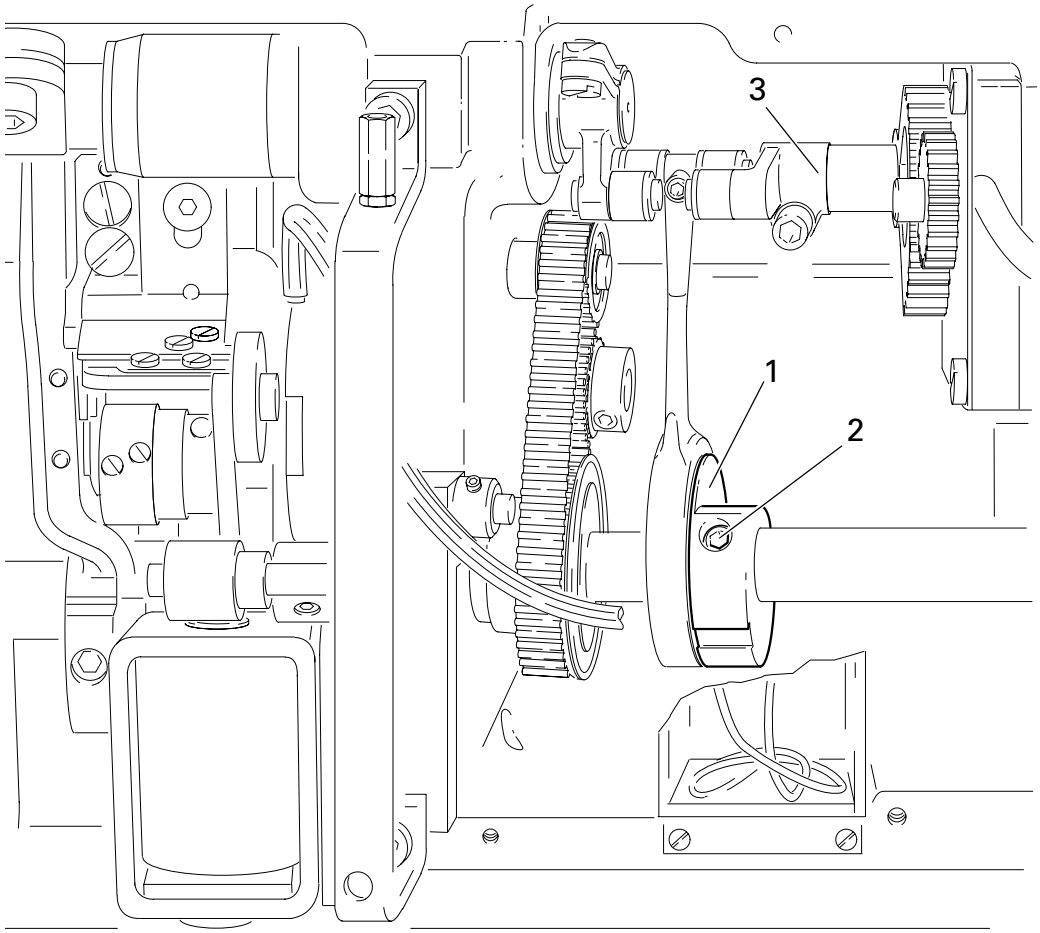

Fig. 13 - 05

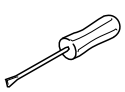

- Position the needle bar at 0.6 mm past b.d.c.
- Adjust eccentric **1** (screws **2**) according to the **requirement,** without moving it sideways.

13.05.05 Lifting motion of the bottom feed dog

Requirement

When the stitch length is set at "0" and the needle bar is positioned at **t.d.c.**

1. The bottom feed dog should be at it the top of its stroke and
2. The control cam **3** should be touching the feed lifting eccentric **1**.

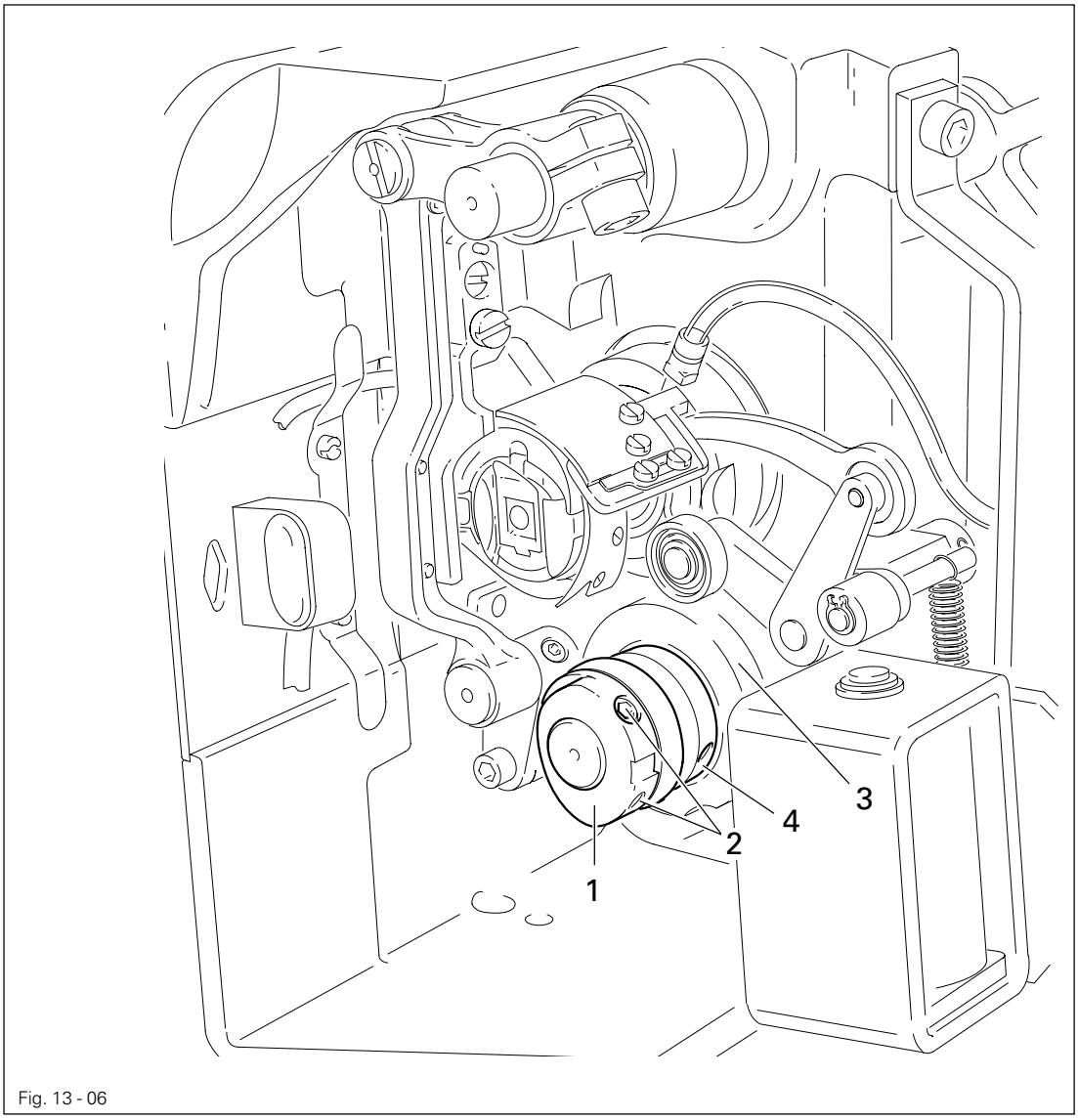

Fig. 13 - 06

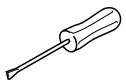

- Set the stitch length at "0" and bring the needle bar into the corresponding position.
- Adjust eccentric **1** (screws **2**) in accordance with **requirement 1.**
- Adjust control cam **3** (screws **4**) in accordance with **requirement 2.**

13.05.06 Height of the bottom feed dog

Requirement

When the stitch length is set at "0", at the top of its stroke the bottom feed dog **1** should

1. Be in the centre of the needle plate cutout, as seen from the side and in the direction of sewing and
2. Be touching the feed dog adjustment gauge **2** over its whole length.

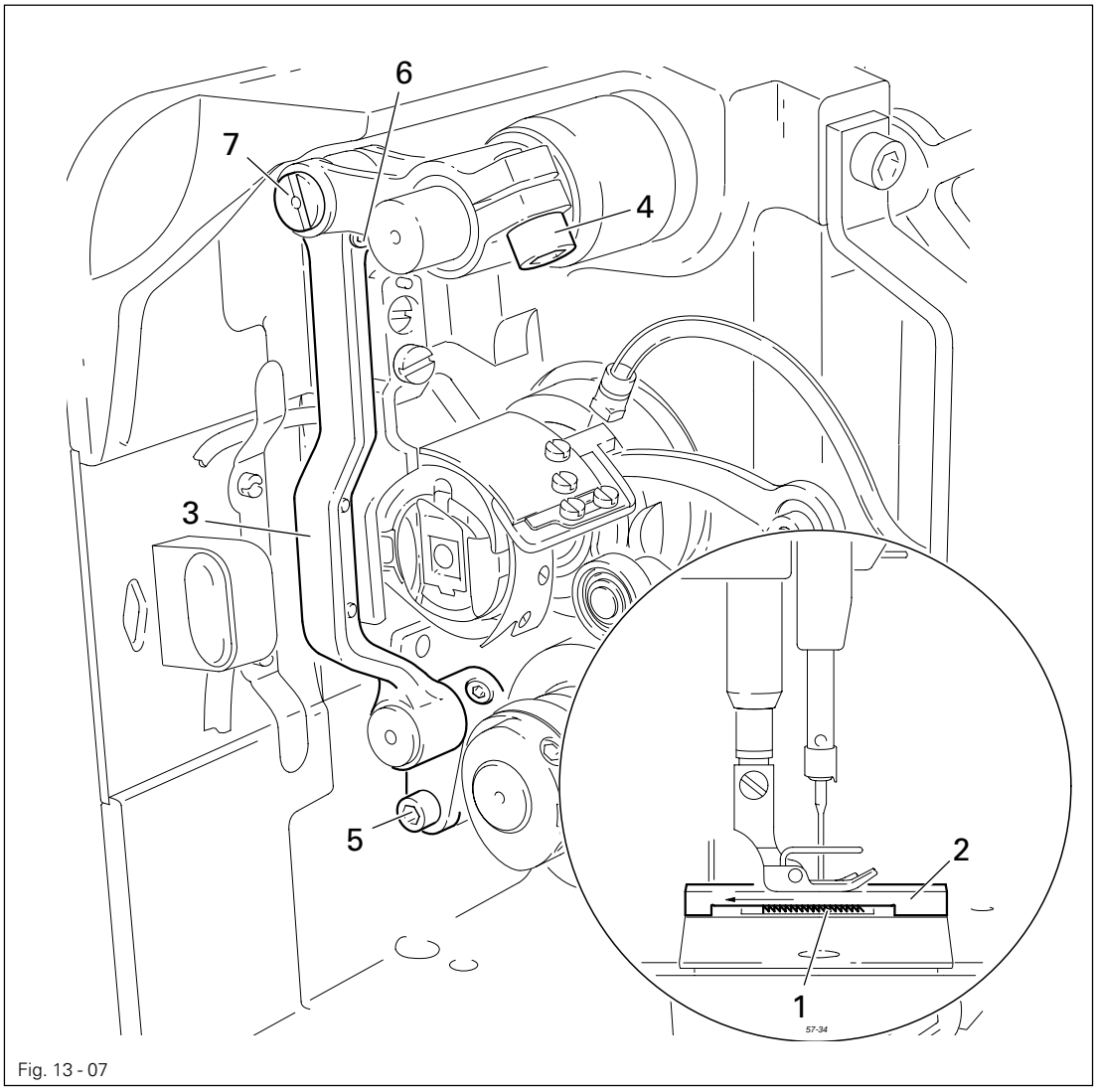

Fig. 13 - 07

- Switch on the machine and with the control panel set the stitch length at "0".
- Turn the balance wheel until the feed regulator motor reacts.
- Bring the bottom feed dog **1** to the top of its stroke.
- Raise the presser foot.
- Position the feed dog adjustment gauge **2** over the needle plate cutout, with the arrow pointing in the direction of sewing and with its front edge level with the edge of the needle plate.
- Lower the presser foot.
- Adjust holder **3** (screw **4**) in accordance with **requirement 1.**
- Adjust holder **3** or eccentric **7** (screws **5** and **6**) in accordance with **requirement 2.**
- Switch off the machine.

13.05.07 Needle in needle hole centre

Requirement
The needle should penetrate in the exact centre of the needle hole.

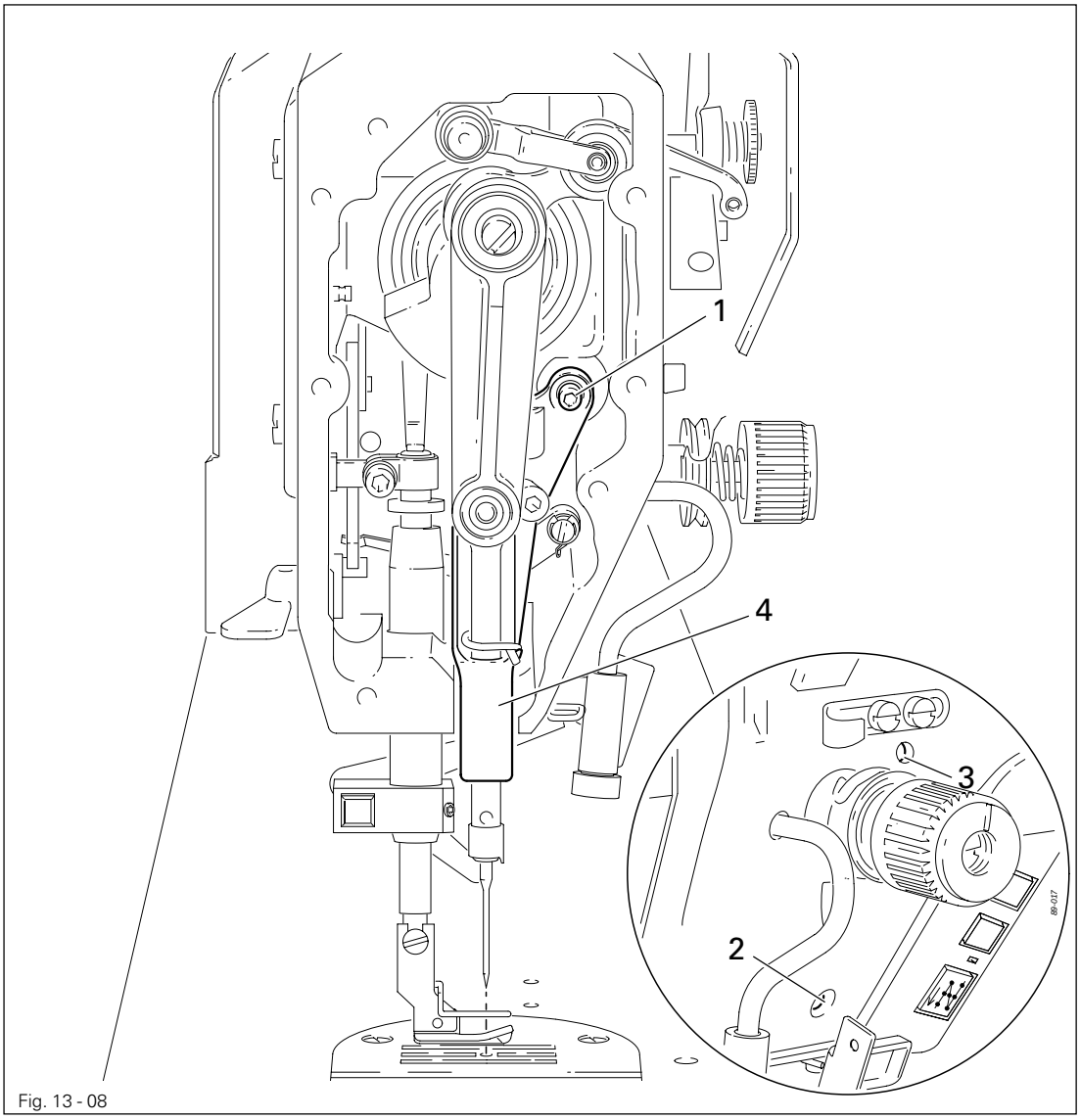

Fig. 13 - 08

- Position the needle in the needle hole.
- Loosen screws **1, 2** and **3**.
- Adjust the needle bar frame **4** in accordance with the **requirement.**
- Tighten screw **2** and slightly tighten screw **3**.
- Use screw **1** to draw the internal guide pin towards the eye of the needle bar frame **4** and tighten it.
- Turn the balance wheel a few times so that the needle bar frame **4** is not under tension.
- Tighten screw **3**.

13.05.08 Hook shaft bearing and toothed belt tension

Requirement

1. The front edge of the hook shaft **5** should be at a distance of **14.5 mm** from the centre of the needle, whereby the groove in the hook shaft bearing **1** (see arrow) should be parallel to the bed-plate and point in the opposite direction to the sewing direction.
2. The toothed belt should be tightened so that when the gauge is placed on it, the marking in the gauge window should match the marking on the bushing.

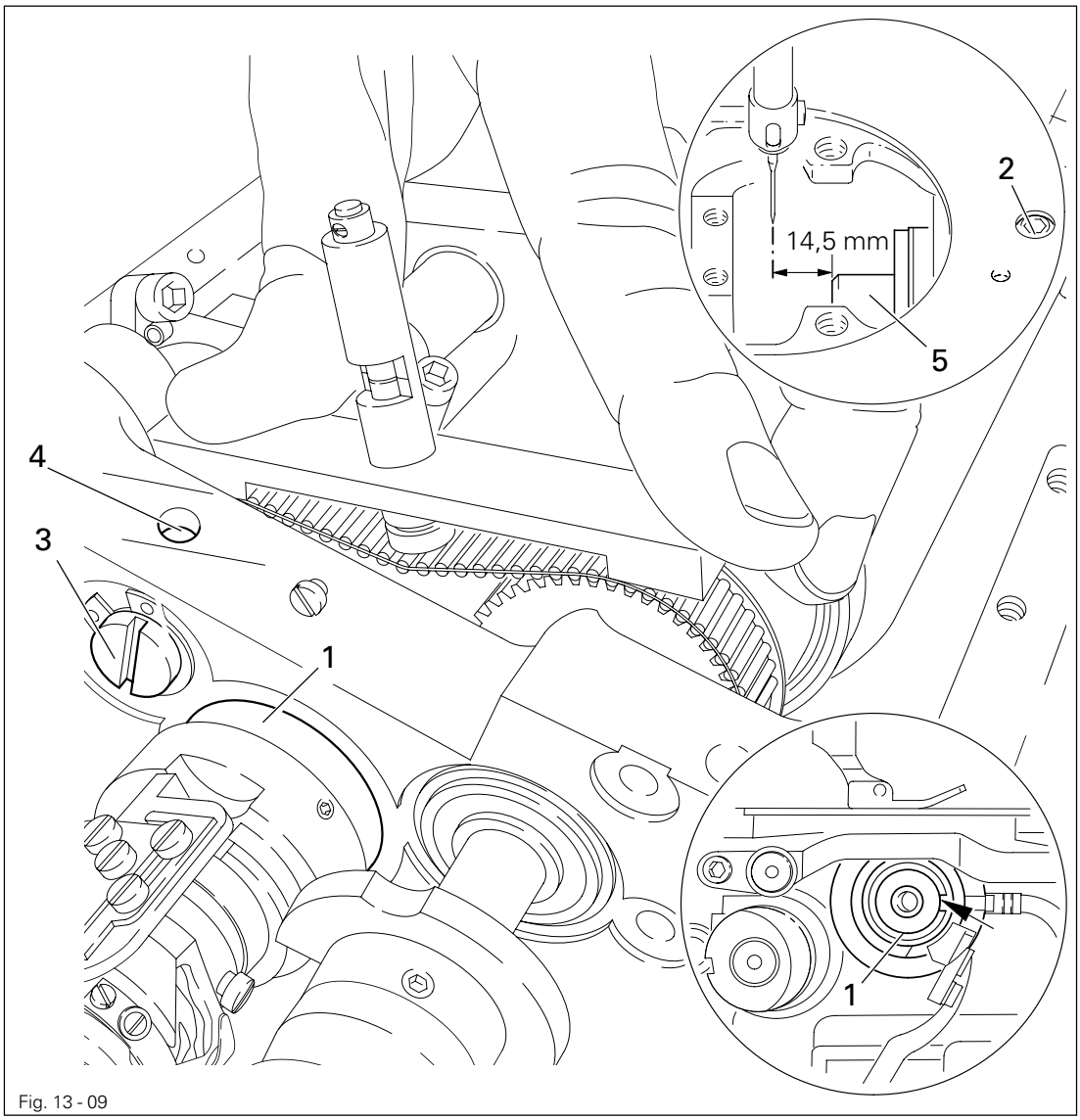

Fig. 13 - 09

- Align the hook bearing shaft **1** (screw **2**) in accordance with **requirement 1.**
- Press the gauge (part no. 61-111 639-76) onto the toothed belt, so that it is centred to it and touching the bearing on the rock shaft. The gauge window must point towards the hook.
- Turn eccentric **3** (screw **4**) clockwise in accordance with **requirement 2**, taking care that the axial position of eccentric **3** is not changed.

13.05.09 Hook lubrication

Requirement

1. The centrifugal disk **1** must be positioned **1.5 mm** in front of the oil ring **3**.
2. When the machine is running at full speed, **after approx. 10 seconds** a mark should be made by a fine stripe of oil on the strip of paper placed over the needle plate cutout.

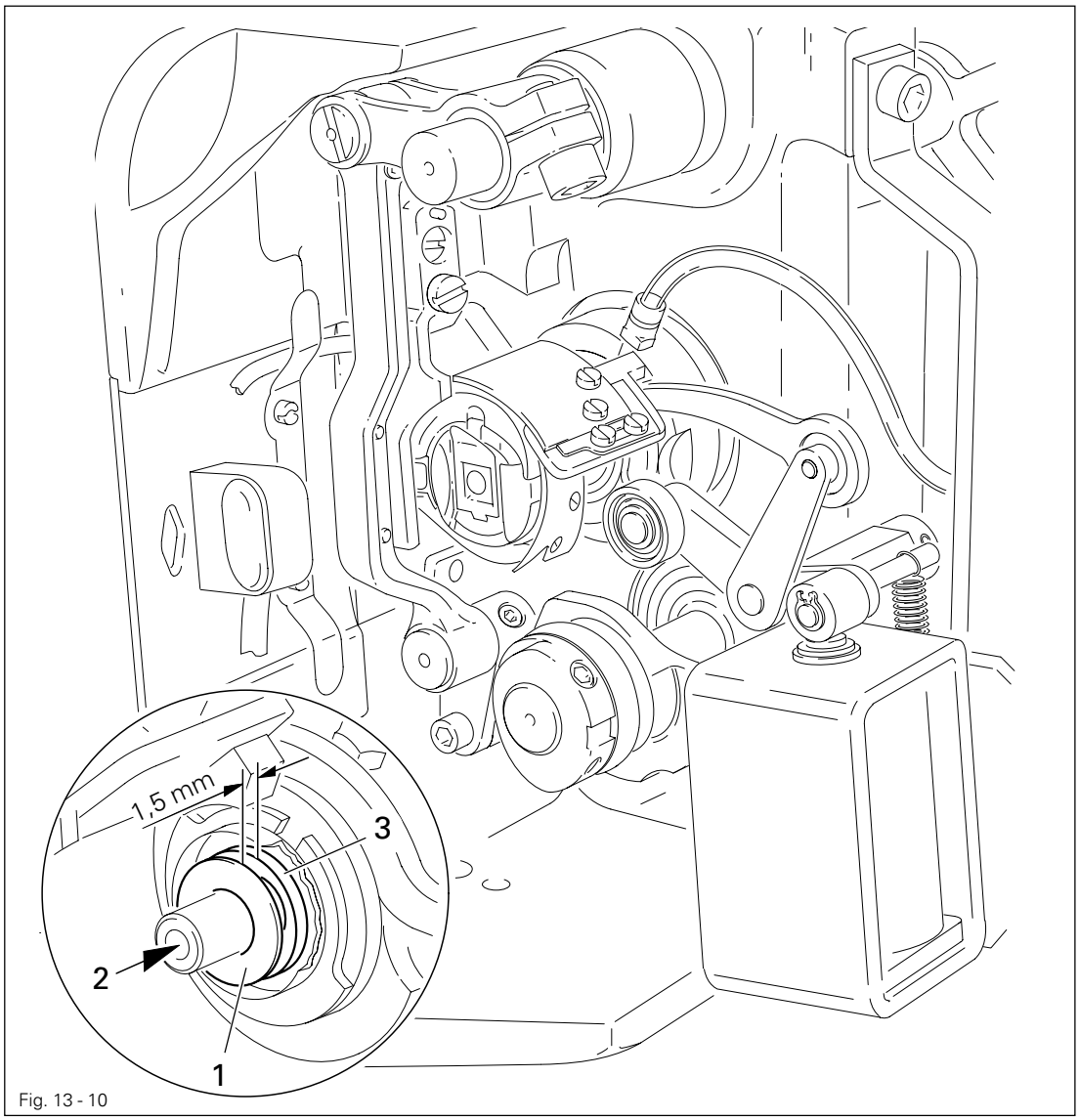

Fig. 13 - 10

The adjustment is only necessary if the wick has been replaced.
When replacing the wick, make sure that the new wick is impregnated with oil.

- Move the centrifugal disk **1** (screw **2**) according to **requirement 1.**
- Check **requirement 2**. If necessary, move centrifugal disk **1.**

13.05.10 Needle rise, hook-to-needle clearance, needle height and bobbin case position finger

Requirement

With the needle at 1.8 mm after BDC,

1. the hook point **6** must point to the middle of the needle and be at a distance of **0.05 mm - 0.1 mm** to the clearance cut of the needle, and
2. the top edge of the needle eye must be **0.8 mm** below the hook point.
3. Between the projection of the bobbin case position finger **4** and the bottom of the retaining groove there should be a distance of **0.5 mm.**

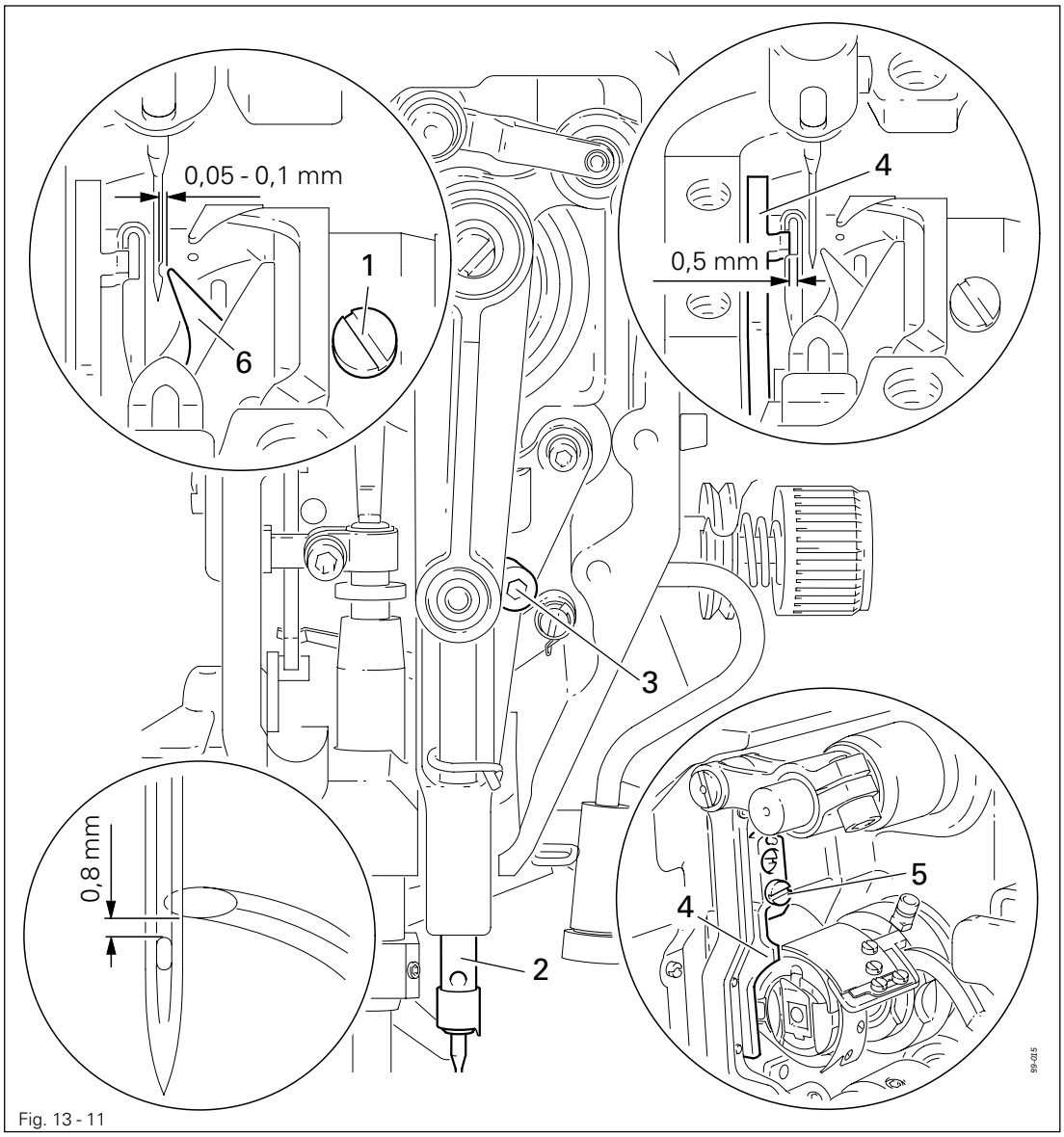

Fig. 13 - 11

- Using the adjustment pin, position the needle bar at 1.8 mm after BDC.
- Adjust the hook according to **requirement 1**.
- Tighten screw **1**.
- Move needle bar **2** (screw **3**) without turning it according to **requirement 2.**
- Align bobbin case position finger **4** (screw **5**) according to **requirement 3.**

13.05.11 Thread check spring and slack thread regulator

Requirement

1. The motion of the thread check spring must be completed when the needle point enters the material (spring stroke approx. **7 mm**).
2. When the thread loop is at its largest when going around the hook, the thread check spring must have moved by approx. **1 mm**.

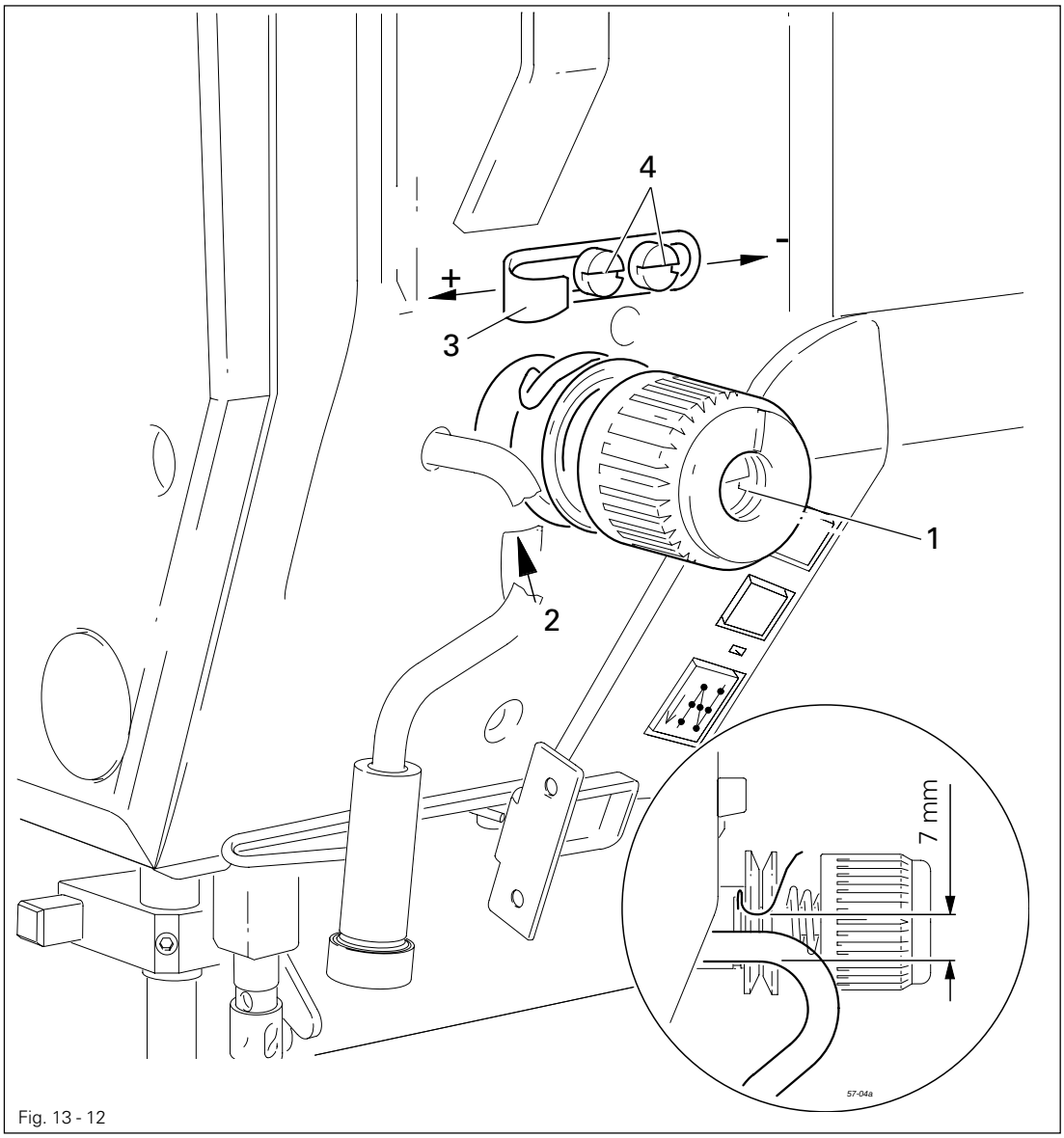

Fig. 13 - 12

- Turn thread tension **1** (screw **2**) according to **requirement 1**.
- Turn thread tension **3** (screw **4**) according to **requirement 2**.

Due to technical sewing reasons it may be necessary to deviate from the spring stroke indicated above.
Move the slack thread regulator **3** (screw **4**) toward the "**+**" (= more thread) or toward the "**-**" (= less thread)

13.05.12 Presser foot clearance

Requirement

1. When the automatic presser foot lift is operated, the clearance between the presser foot and the needle plate should be **7 mm.**
2. When the hand lever is raised, the clearance between the presser foot and the needle plate should be **5 mm.**

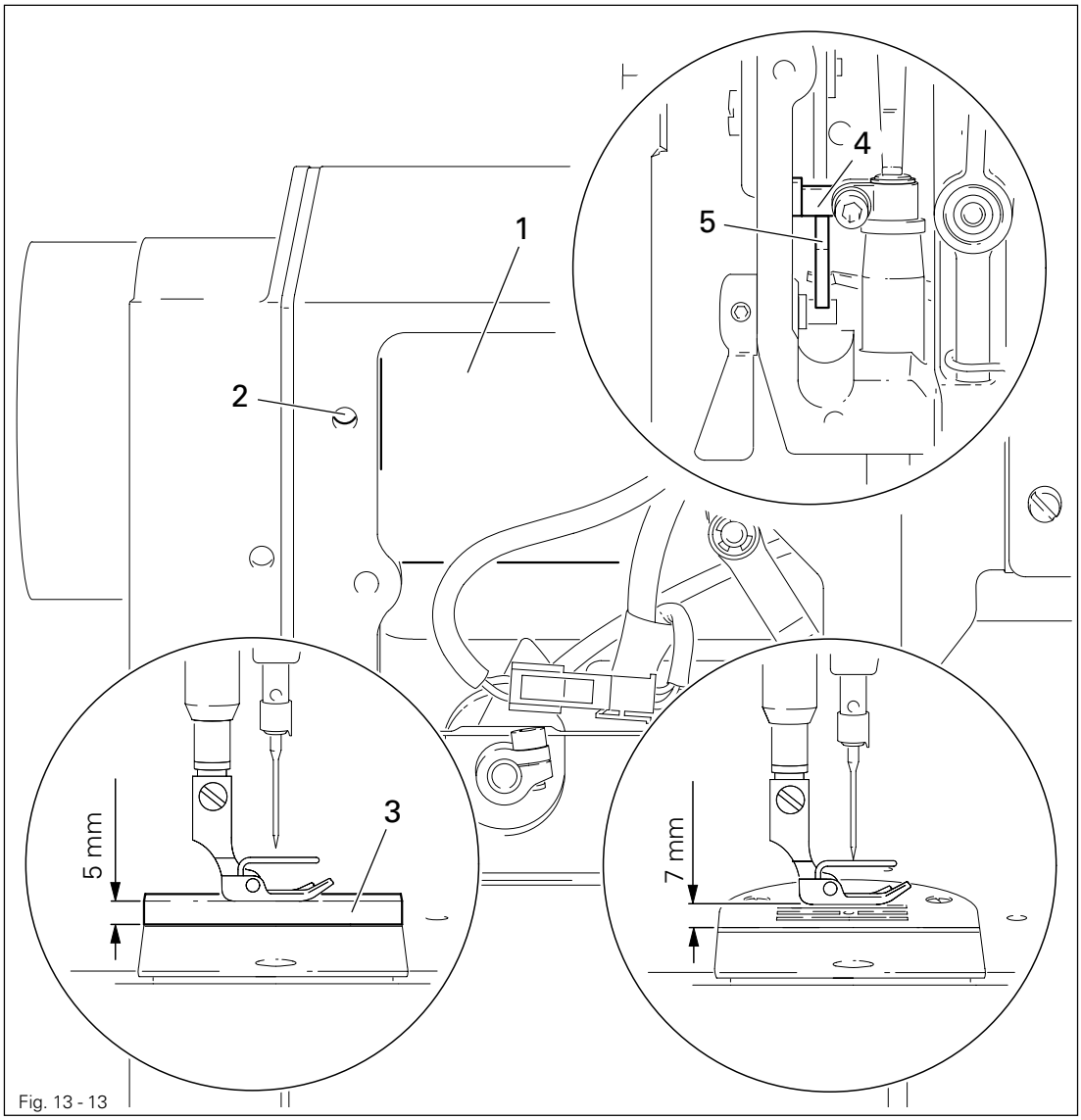

Fig. 13 - 13

- Adjust solenoid **1** (screw **2**) in accordance with **requirement 1.**
- Raise the hand lever and place adjustment gauge **3** (part no. 61-111 639-70) under the presser foot in accordance with **requirement 2.**
- Move presser bar lifting lever **4** against lifting piece **5**.

Make sure that the needle is in the centre of the presser foot.

13.05.13 Bobbin winder

Requirement

1. With the bobbin winder on, the drive wheel **1** must engage reliably.
2. With the bobbin winder off, the friction wheel **5** must not be driven by the drive wheel **1**.
3. The eccentric pin **3** should be positioned in the centre of the large bobbin chamber.

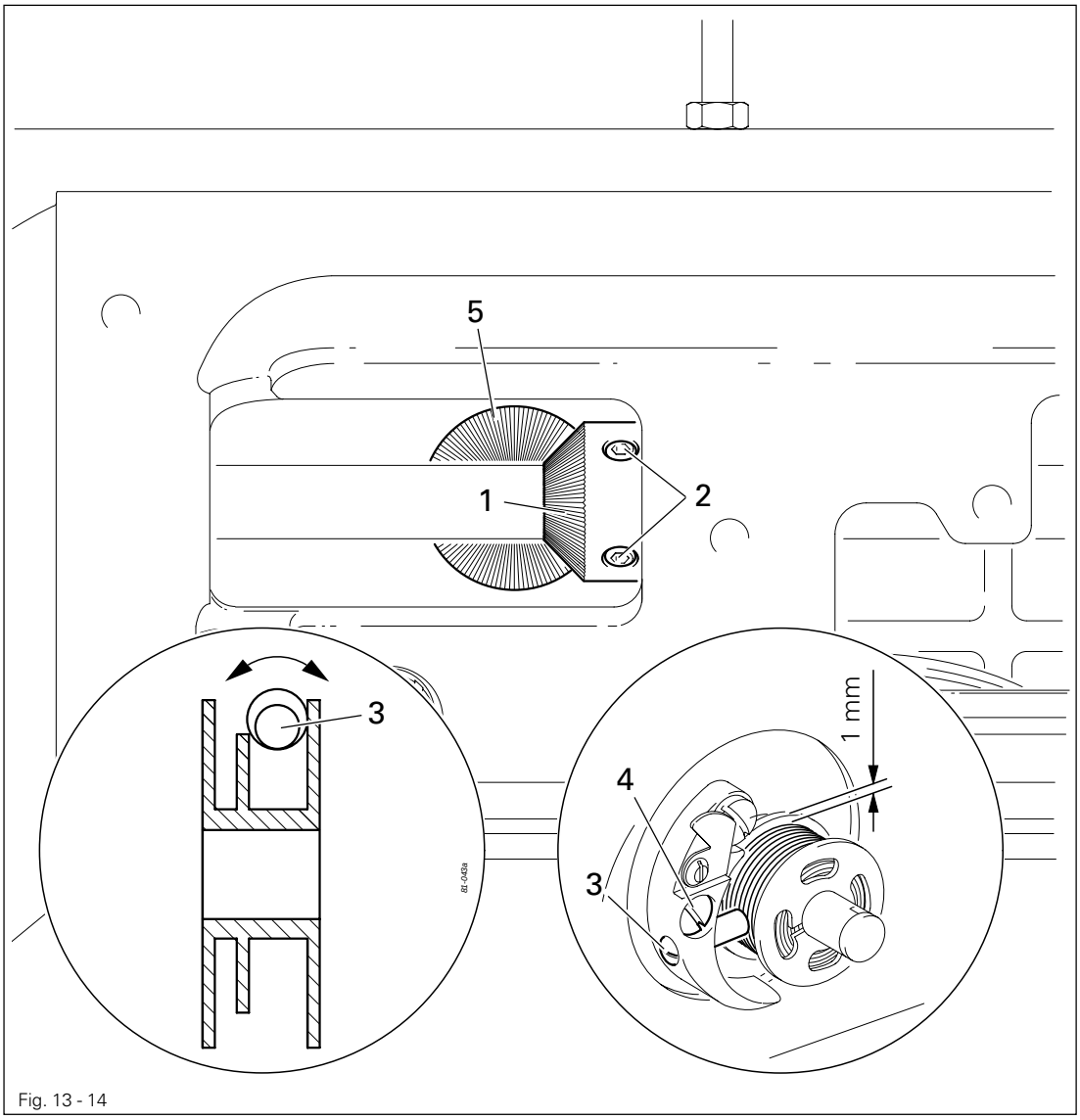

Fig. 13 - 14

- Move drive wheel **1** (screws **2**) in accordance with **requirement 1 and 2.**
- Place a bobbin on the bobbin winder, thread the bobbin and switch on the bobbin winder.
- Adjust pin **3** (screw **4**) in accordance with **requirement 2** and turn it in accordance with **requirement 3.**

13.05.14 Setting the zero point of the feed regulator

Requirement
When the stitch length is set at "0", at maximum speed (4500 spm) the needle should always penetrate in the same place.

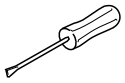

- Unthread the machine.
- Switch on the machine.
- Place the workpiece under the presser foot.
- Let the machine sew at maximum speed and check the **requirement.**
  (The workpiece should not move).

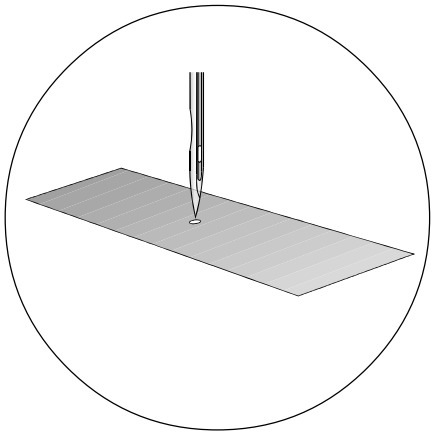

- Change the value for parameter **834** within the permissible values in accordance with the **requirement.**

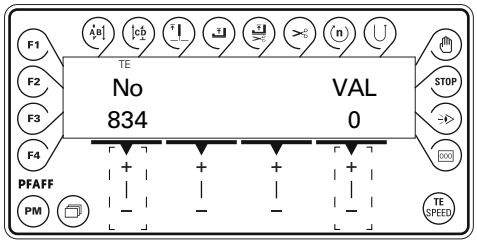

The permissible values for parameter **834** are **"1", "0"** or **"-1".**
If the zero point of the feed regulator cannot be set by selecting one of the permissible values, the mechanical setting must be checked or corrected, see **Chapter 13.05.03 Zero position of the bottom feed dog.**

The zero position of the feed regulator is always recognisable in a range of 3 values. When making the adjustment, select the middle value.

- Switch off the machine.

Find more information on how to select and alter parameters and about descriptions (functions) of the individual parameters in **Chapter 13.11 Parameter settings.**

13.05.15 Stitch length adjustment forwards and in reverse

Requirement
At a maximum speed of 400 spm, the stitch length selected on the control panel should not differ from the actual stitch length when sewing forwards or in reverse.

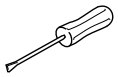

- Thread the machine.
- Switch on the machine.
- Select the stitch length being used on the control panel.
- With parameter **607** limit the maximum speed to 400 spm.
- Set parameter **846** at **100.**
- Place the workpiece under the presser foot.
- Sew a seam with at least 20 stitches.
- Measure the length of the seam over 20 stitches and calculate the actual stitch length.
- If the difference, measured over 20 stitches, is larger than +/- 0.5 mm, the value for parameter 846 must be corrected.
- Take the value for parameter **846** from the table or calculate it with the aid of the formula:

$$\frac{\text{Set stitch length}}{\text{Actual stitch length}} \times 100$$

Stitch length 2,5 mm		Stitch length 2,0 mm		Stitch length 1,5 mm	
Length over 20 stitches	Value for parameter 846 / 847	Length over 20 stitches	Value for parameter 846 / 847	Length over 20 stitches	Value for parameter 846 / 847
48.5	103	38.5	104	28.5	105
49.0	102	39.0	103	29.0	103
49.5	101	39.5	101	29.5	102
50.0	**100**	**40.0**	**100**	**30.0**	**100**
50.5	99	40.5	99	30.5	98
51.0	98	41.0	97	31.0	97
51.5	97	41.5	96	31.5	95
52.0	96	42.0	95	32.0	94
52.5	95	42.5	94	32.5	92
53.0	94	43.0	93		
53.5	93	43.5	92		
54.0	93				
54.5	92				

- Select the calculated value for parameter **846** and switch off the machine.

The adjustment of the reverse stitch length is carried out as described in the above work steps under parameter "847**"**, with the reverse feed key pressed, see **Chapter 7.02 Keys on the machine head.** More information about selecting and changing parameters and explanations (functions) of the individual parameters is contained in **Chapter 13.11 Parameter settings.**

13.05.16 Mechanical limiting of the stitch length

Requirement

1. The maximum stitch length should be 2.5 mm, but the needle should not touch the needle plate cutout when sewing forwards or in reverse.
2. When the maximum stitch length is set, when sewing forwards the screws of stop **1** and when sewing in reverse the screws of stop **3** should each have a clearance of **0.3 mm** to the corresponding metal edge.

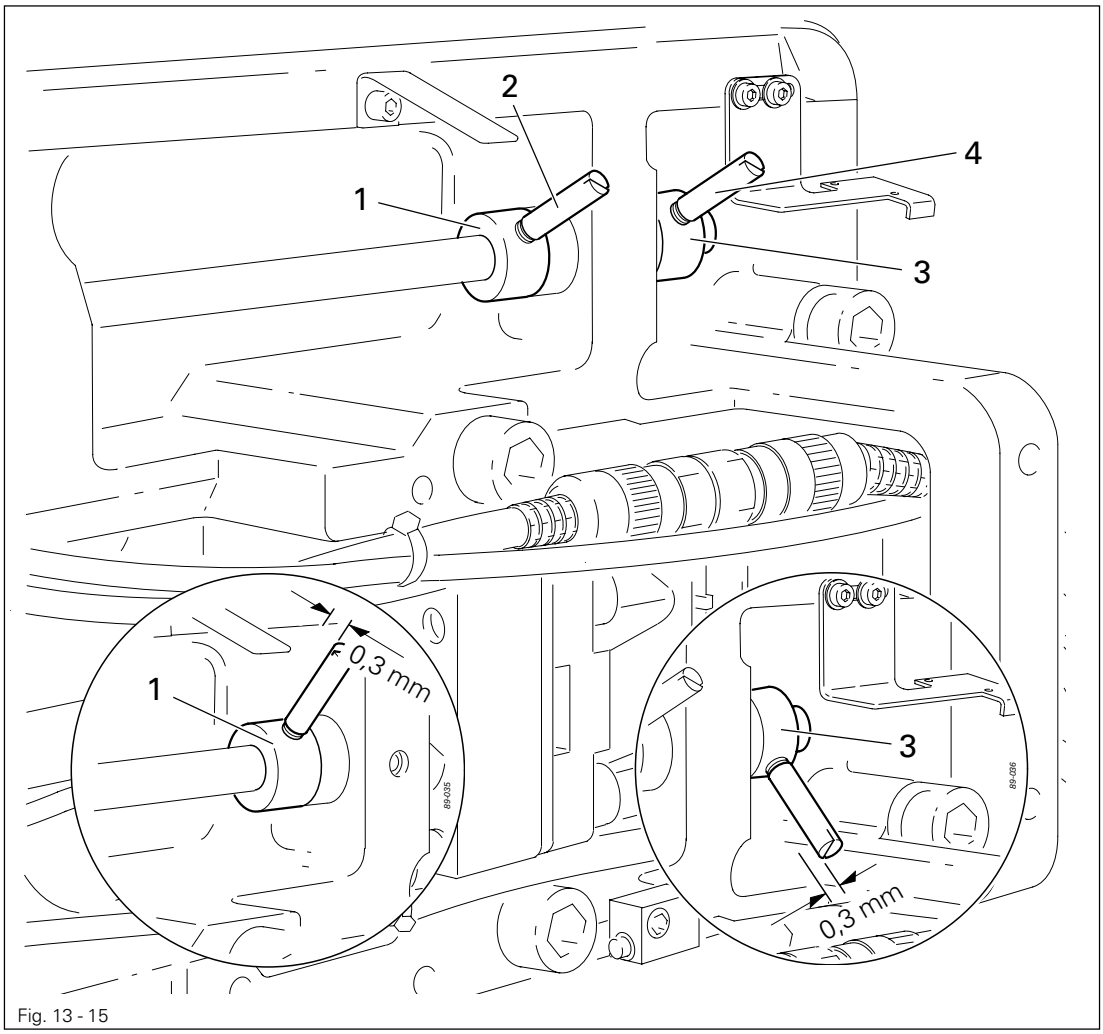

Fig. 13 - 15

- Switch on the machine and set parameter 849 in accordance with **requirement 1**, see **Chapter 13.11 Parameter settings.**
- Select the maximum stitch length on the control panel.
- Adjust stop **1** (screw **2**) in accordance with **requirement 2.**
- Press the key on the machine head and sew 2 stitches (in reverse).
- Adjust stop **3** (screw **4**) in accordance with **requirement 2.**
- Switch off the machine.

13.05.17 Presser foot pressure

Requirement
The material must be fed reliably. In the process, pressure marks on the material must not be made.

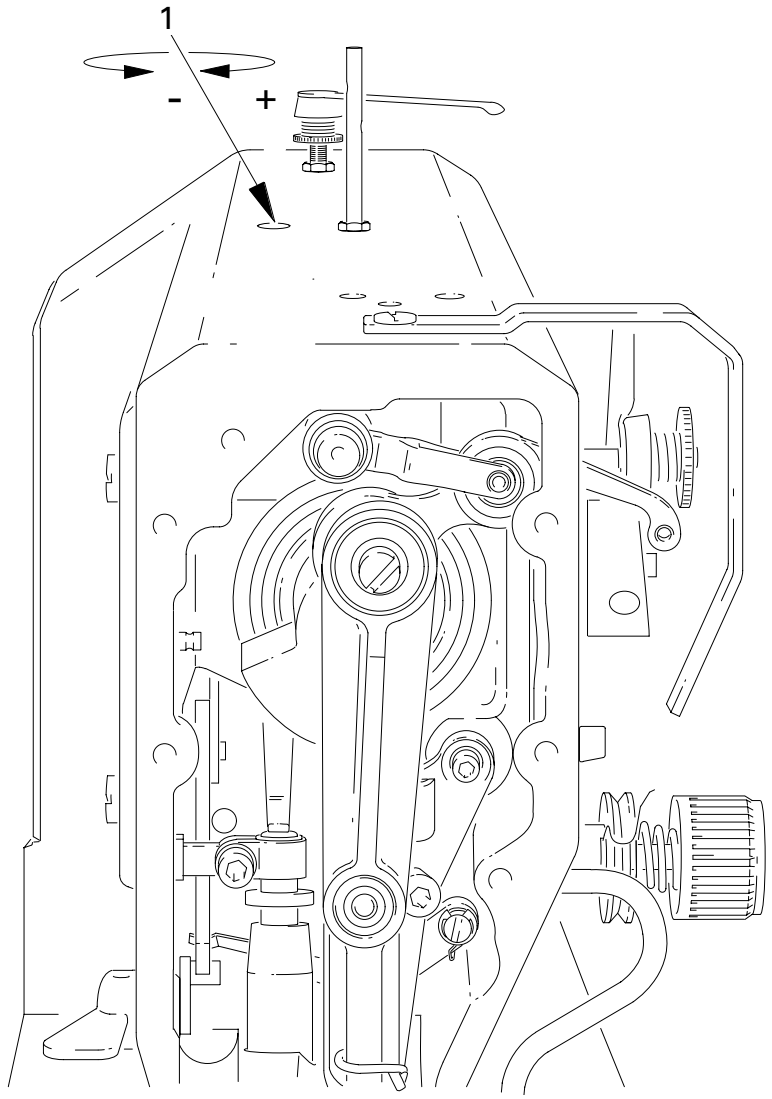

Fig. 13 - 16

- Turn screw **1** in accordance with the **requirement.**

13.06 Adjusting the thread trimming device -900/24

13.06.01 Adjusting the solenoid / preliminary adjustment of the control cam

Requirement

1. When solenoid **3** is completely extended, roller lever **4** should be at the lowest point of the control cam.
2. When the needle bar is positioned at 1.8 mm after b.d.c. (needle rise position), roller lever **4** should engage in the appropriate recess of the control cam.

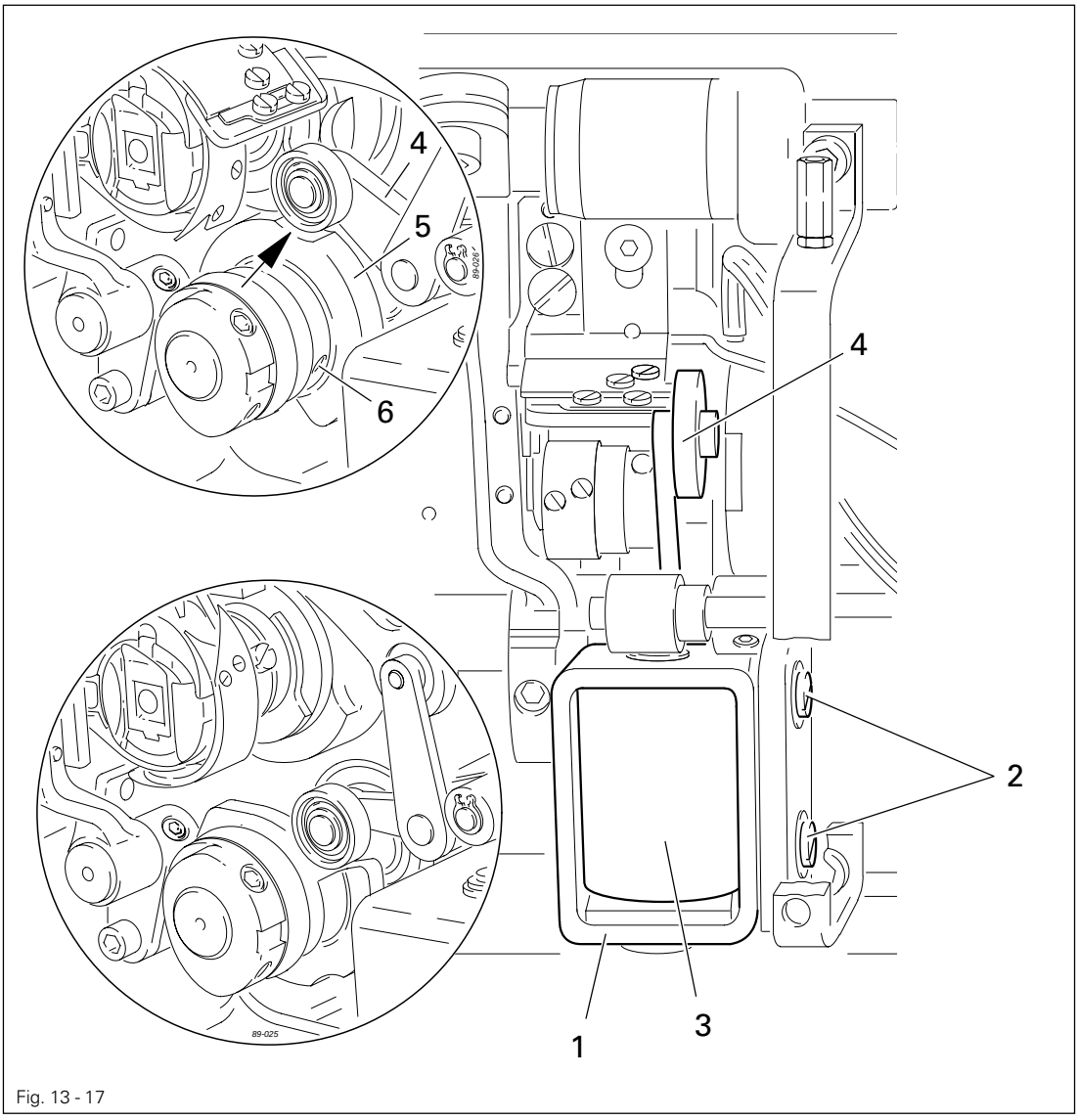

Fig. 13 - 17

- Adjust solenoid holder **1** (screws **2**) in accordance with **requirement 1.**
- Adjust control cam **5** (screws **6**) in accordance with **requirement 2.**

13.06.02 Lateral alignment of the thread catcher

Requirement

1. The tip of the thread catcher **5** must point exactly to the center of the needle.
2. The thread catcher **5** must be horizontal. It must not graze anything when it is operating.

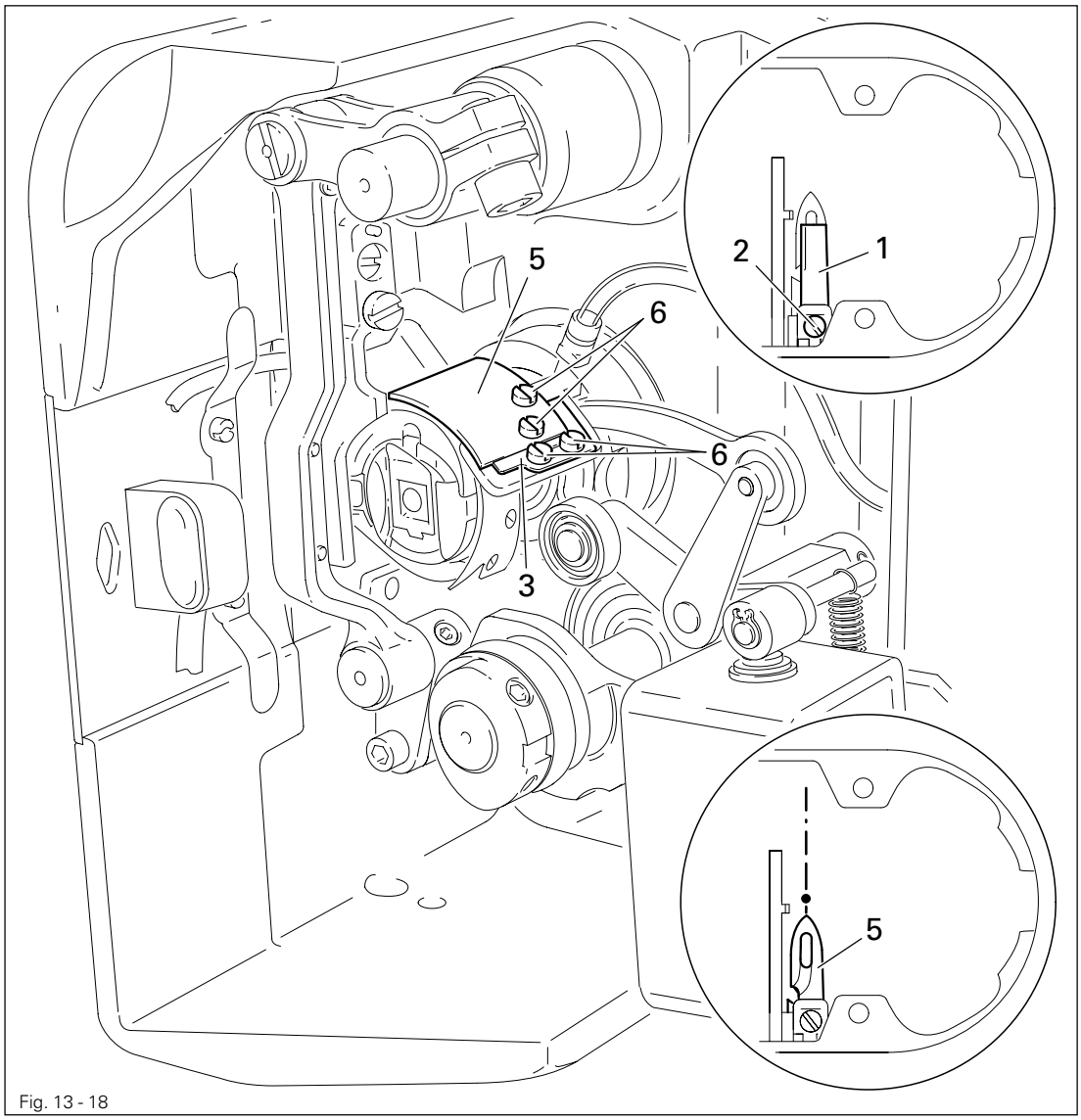

Fig. 13 - 18

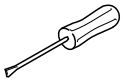

- Remove knife **1** (screw **2**).
- Move needle bar to its BDC.
- Loosen stop **3** (screws **4**).
- Position thread catcher **5** (screw **6**) manually in front of the needle.
- Align thread catcher **5** (screws **7**) according to the **requirements.**



For further adjustments, leave knife **1** removed and stop **3** loosened.

13.06.03 Knife position

Requirement

1. There must be a distance of **4 mm** between the cutting edge of the knife and the needle.
2. The right edge of the knife **1** must not extend beyond the right edge of the thread catcher (see arrow).

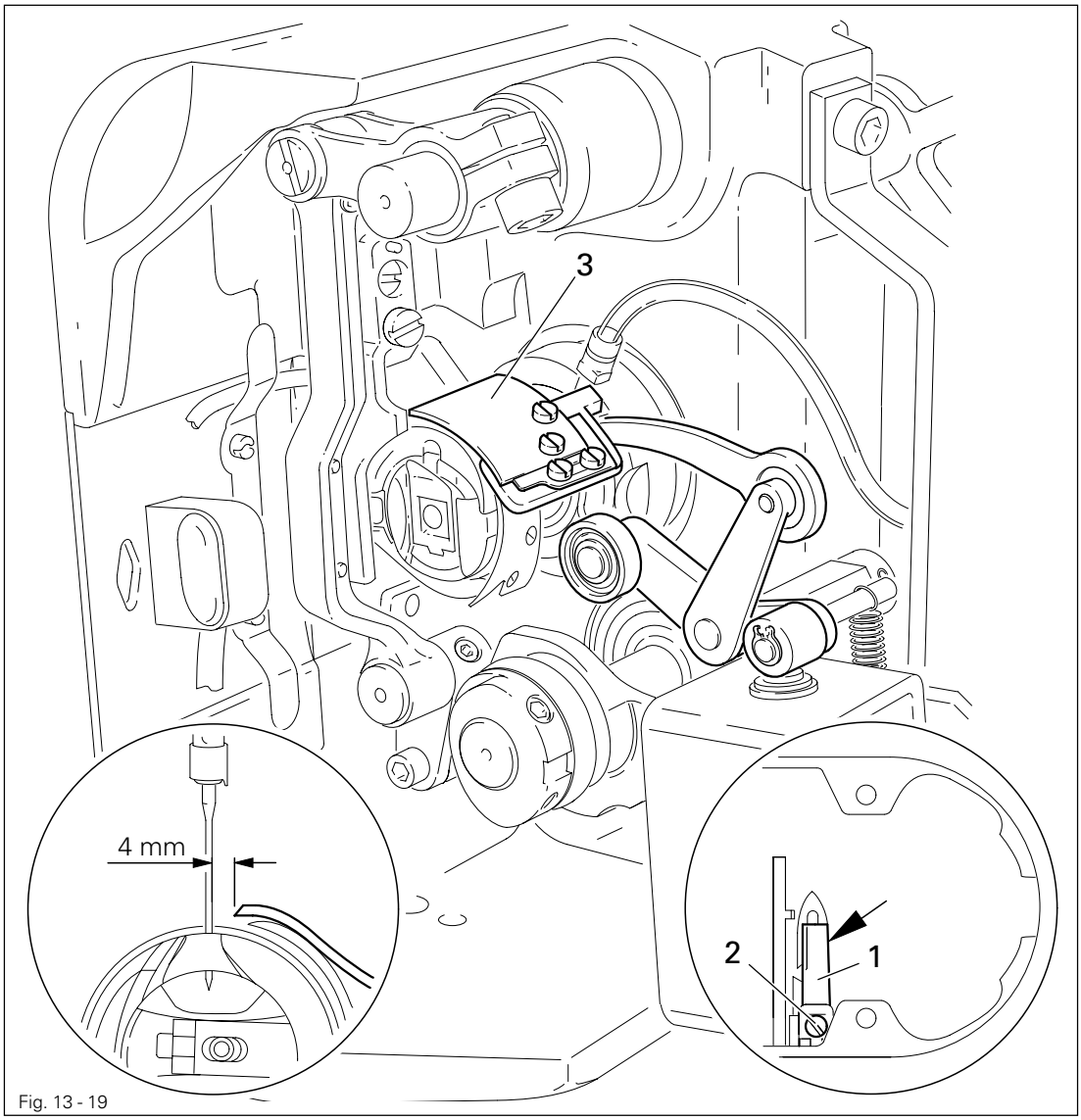

Fig. 13 - 19

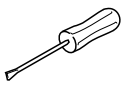

- Bring the needle bar to BDC.
- Slide knife **1** under the locking tab and align according to **requirement 1.**
- Tighten screw **2** lightly.
- Adjust thread catcher carrier **3** by hand until the wedge point in the thread catcher is positioned just in front of the cutting edge of the knife.
- Align knife **1** according to **requirement 2** and tighten screw **2**.

13.06.04 Front point of reversal of the thread catcher

Requirement
At the front point of reversal of thread catcher **4**, the tip of the thread catcher cutout should be **1 mm** in front of the bobbin case position finger **5**.

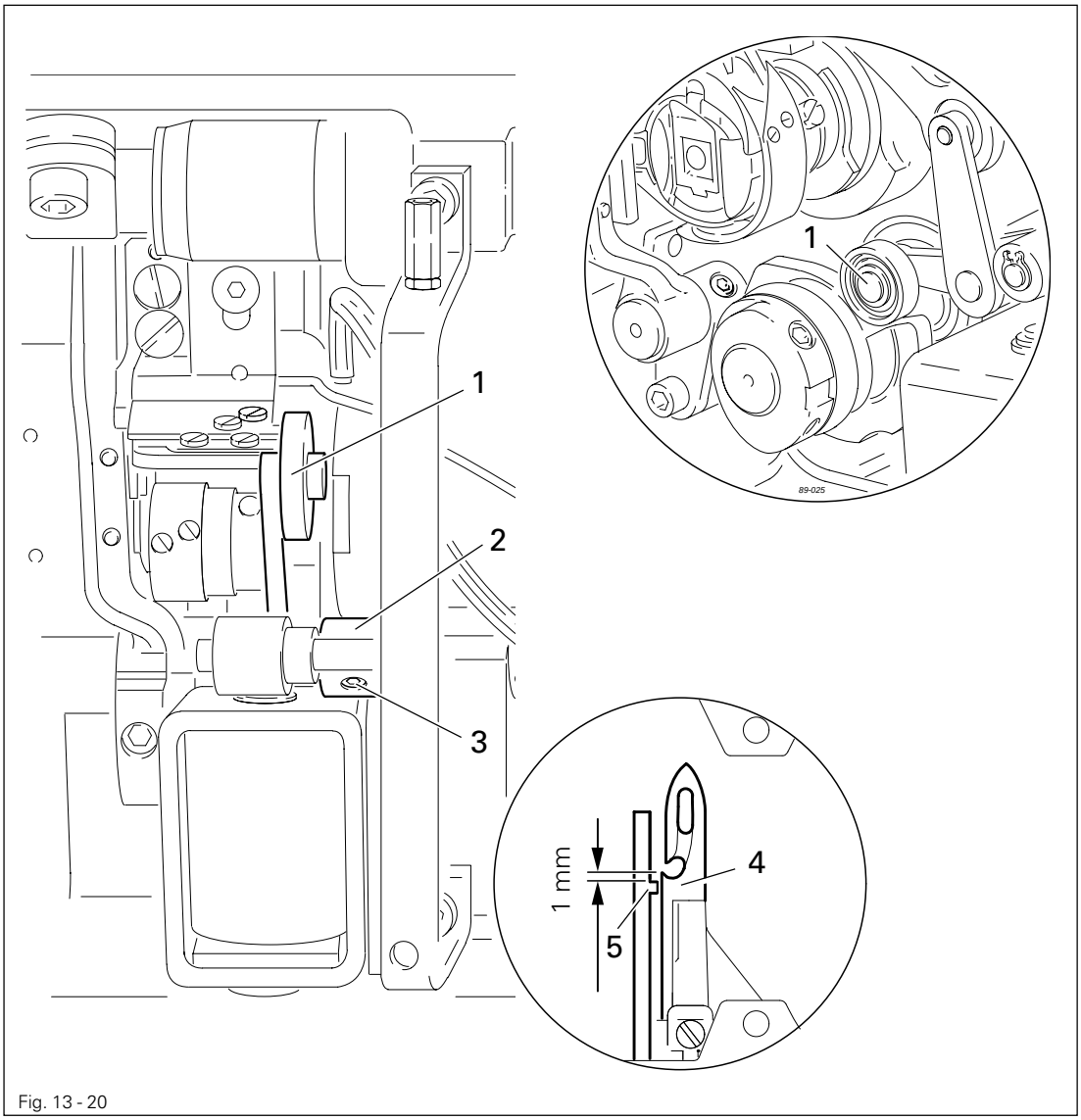

Fig. 13 - 20

- Position roller lever **1** at the lowest point of the control cam.
- Adjust bush **2** (screws **3**) according to the **requirement.**

13.06.05 Manual trimming check

Requirement
Two threads must be cut perfectly both left and right in the cutout of thread catcher **1**.

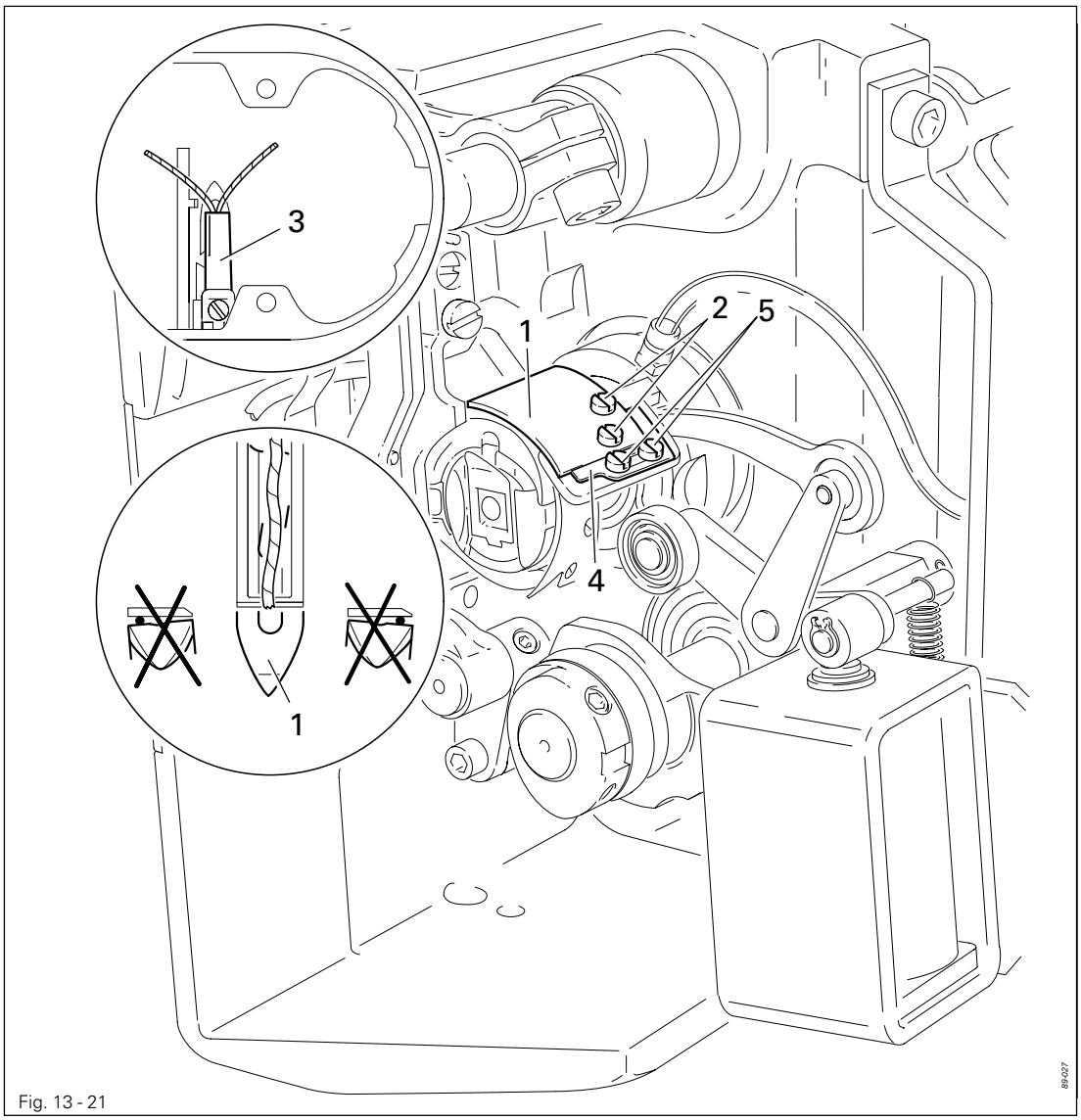

Fig. 13 - 21

- Move thread catcher **1** by hand to its front point of reversal.
- Double the thread and insert into catcher cutout.
- Carry out trimming operation manually.
- If the threads are not cut according to the **requirement**, align thread catcher **1** (screws **2**) with knife **3** accordingly.
- Move stop **4** against thread catcher **1** and tighten screws **5**.
- Check chapter **13.06.02 Lateral alignment of the thread catcher**, and readjust if necessary.

13.06.06 Needle thread tension release

Requirement

1. The solenoid stroke should be **1.5 mm.**
2. When the solenoid **5** is operated by hand, there should be a distance of at least **0.5 mm** between the tension disks 6.

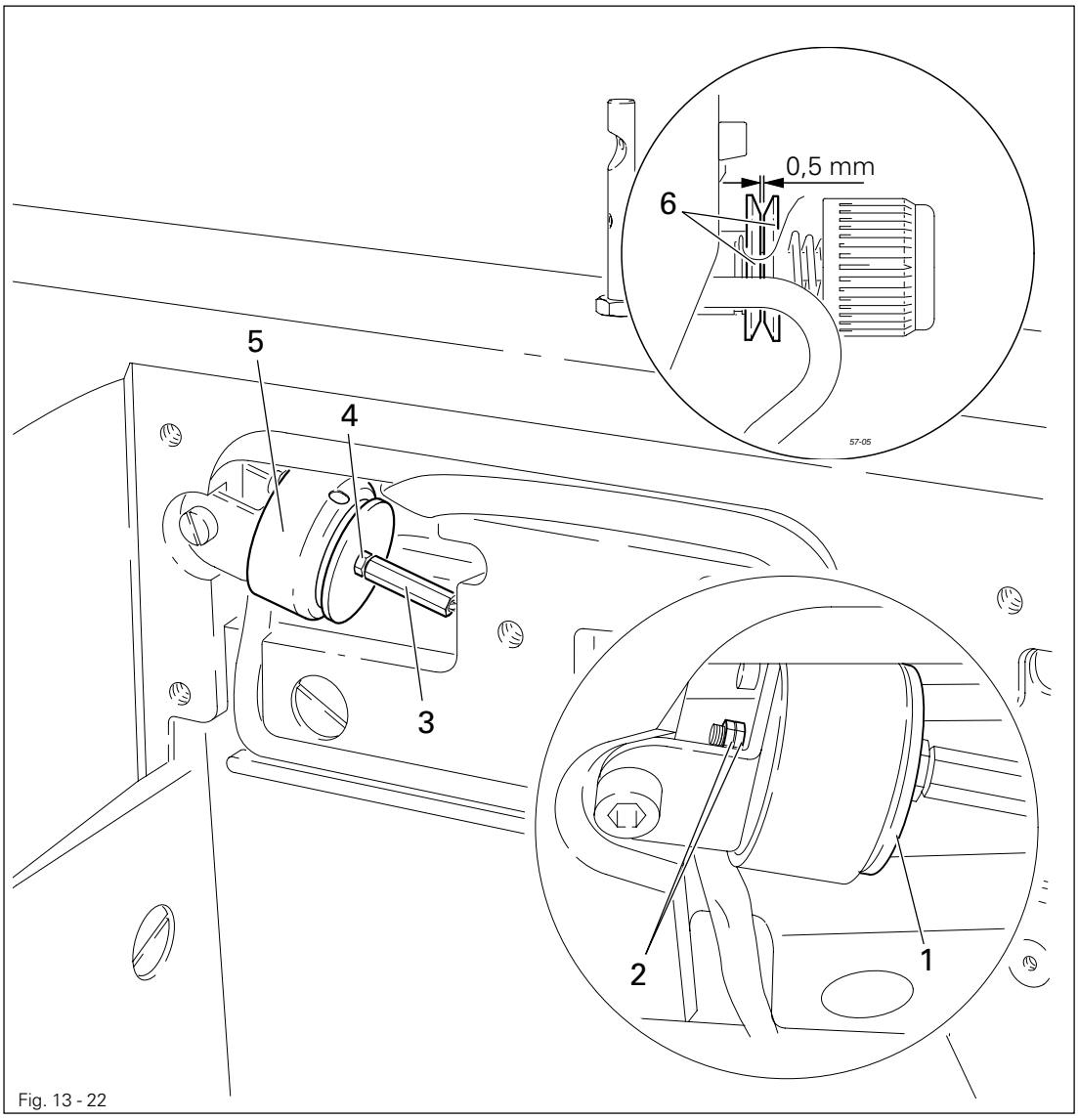

Fig. 13 - 22

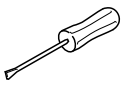

- Adjust disk **1** (nuts **2**) in accordance with **requirement 1.**
- Adjust screw **3** (nut **4**) in accordance with **requirement 2.**

13.06.07 Readjusting the control cam

Requirement
When the take-up lever is in its t.d.c., control cam **1** should have moved thread catcher **3**.

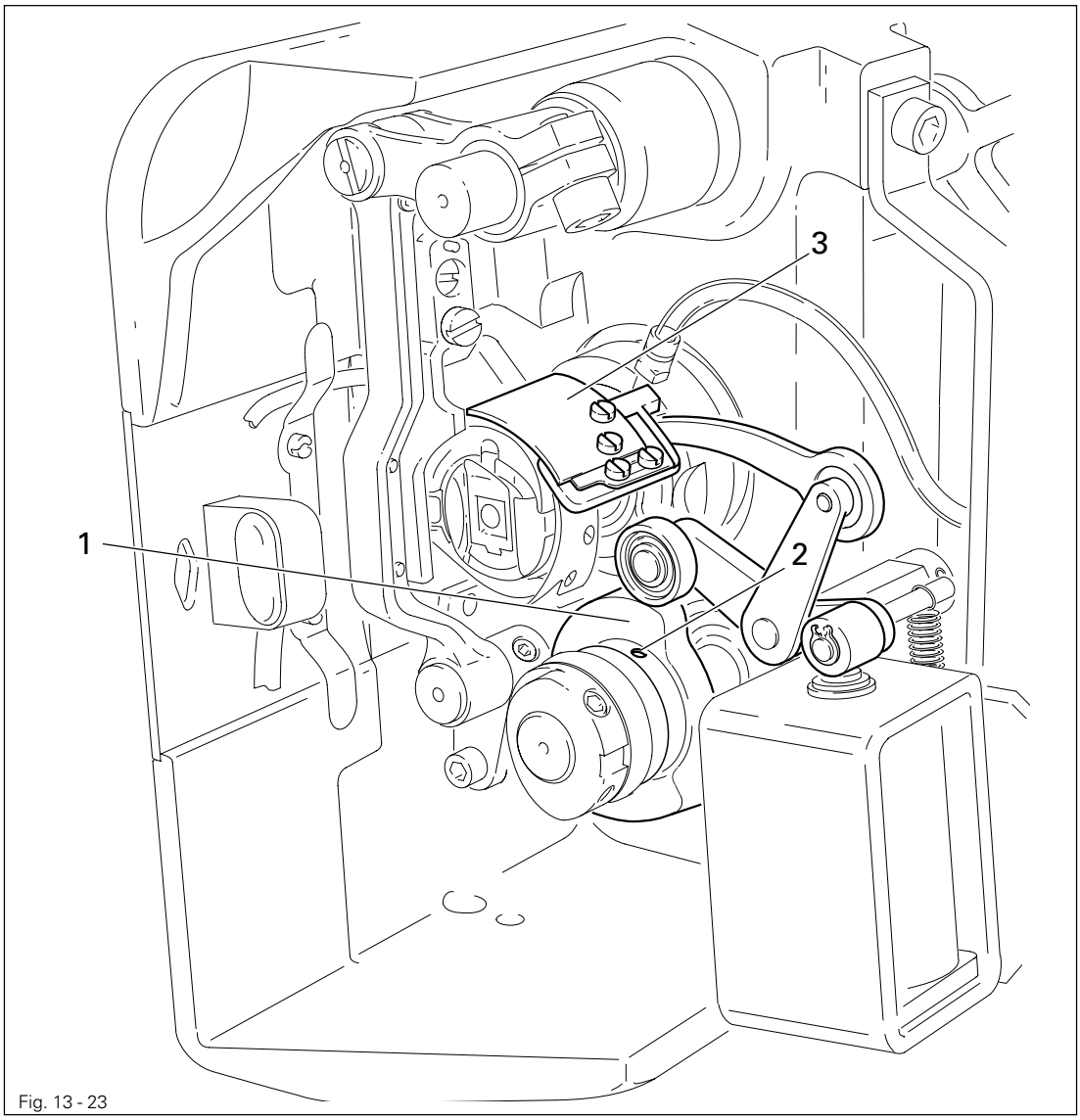

Fig. 13 - 23

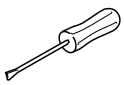

- Adjust control cam **1** (screws **2**) according to the **requirement.**

13.07 Adjusting the thread wiper -909/04

13.07.01 Thread wiper movement

Requirement

1. The thread wiper **5** must not strike against anything when it is moving.
2. When the take-up lever is at TDC, the thread wiper **5** is to move under the needle point and clear it by approx. **1 mm** when the engaging solenoid **2** is operated.

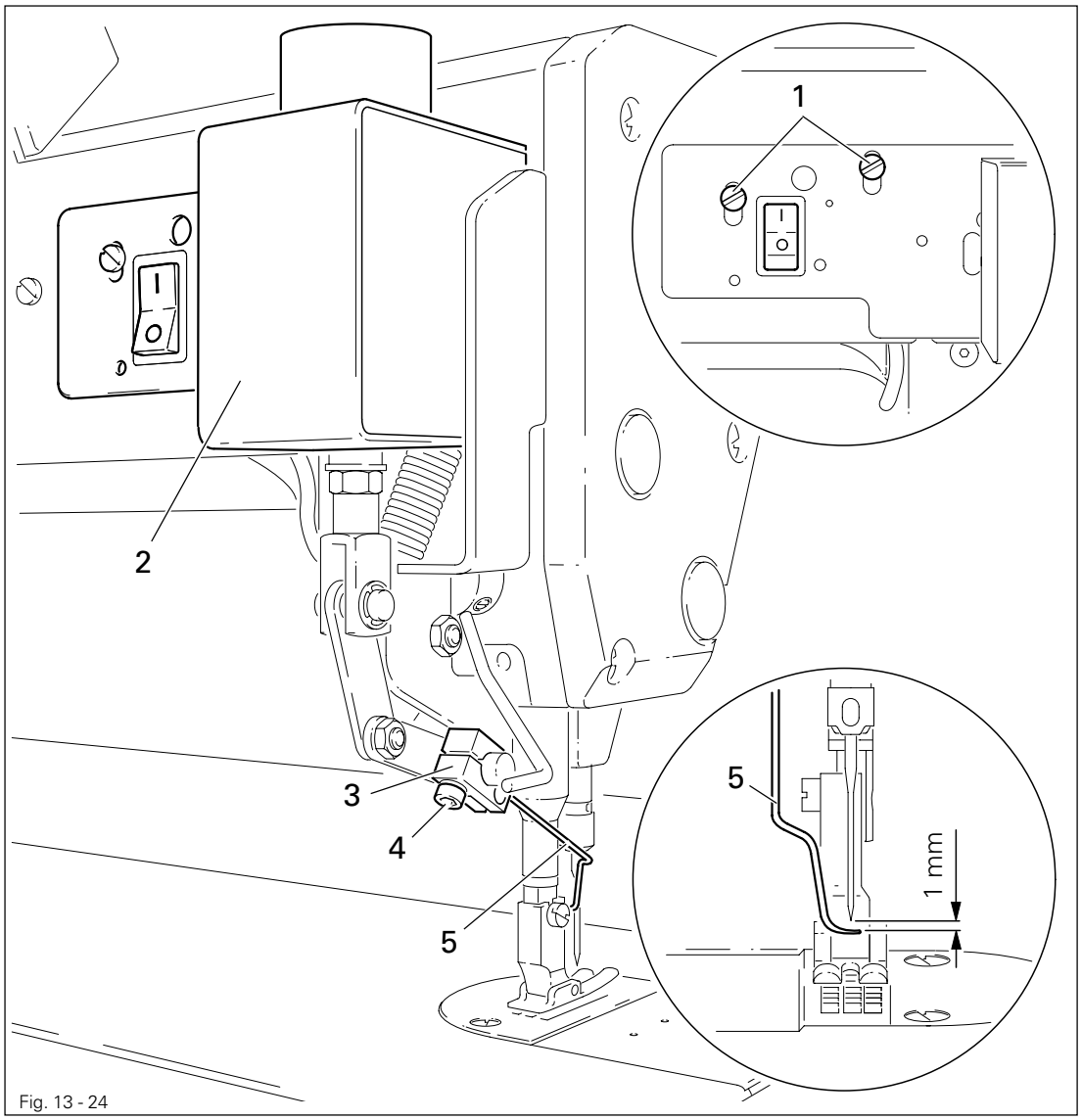

Fig. 13 - 24

- Bring the take-up lever to TDC.
- Loosen screws **1**.
- Push thread wiper **2** parallel to the bedplate to the very top and tighten screws **1** slightly.
- Turn bracket **3** (screw **4**) according to **requirement 1**.
- Move thread wiper **2** parallel to the bedplate according to **requirement 2**.
- Tighten screws **1**.

13.07.02 Thread wiper position

Requirement

Seen from the direction of sewing

1. The point of the thread wiper **5** must be approx. **1 - 1.5 mm** to the right of the needle,
2. The thread wiper **5** must be approx. **2 mm** in front of the needle in its foremost position.

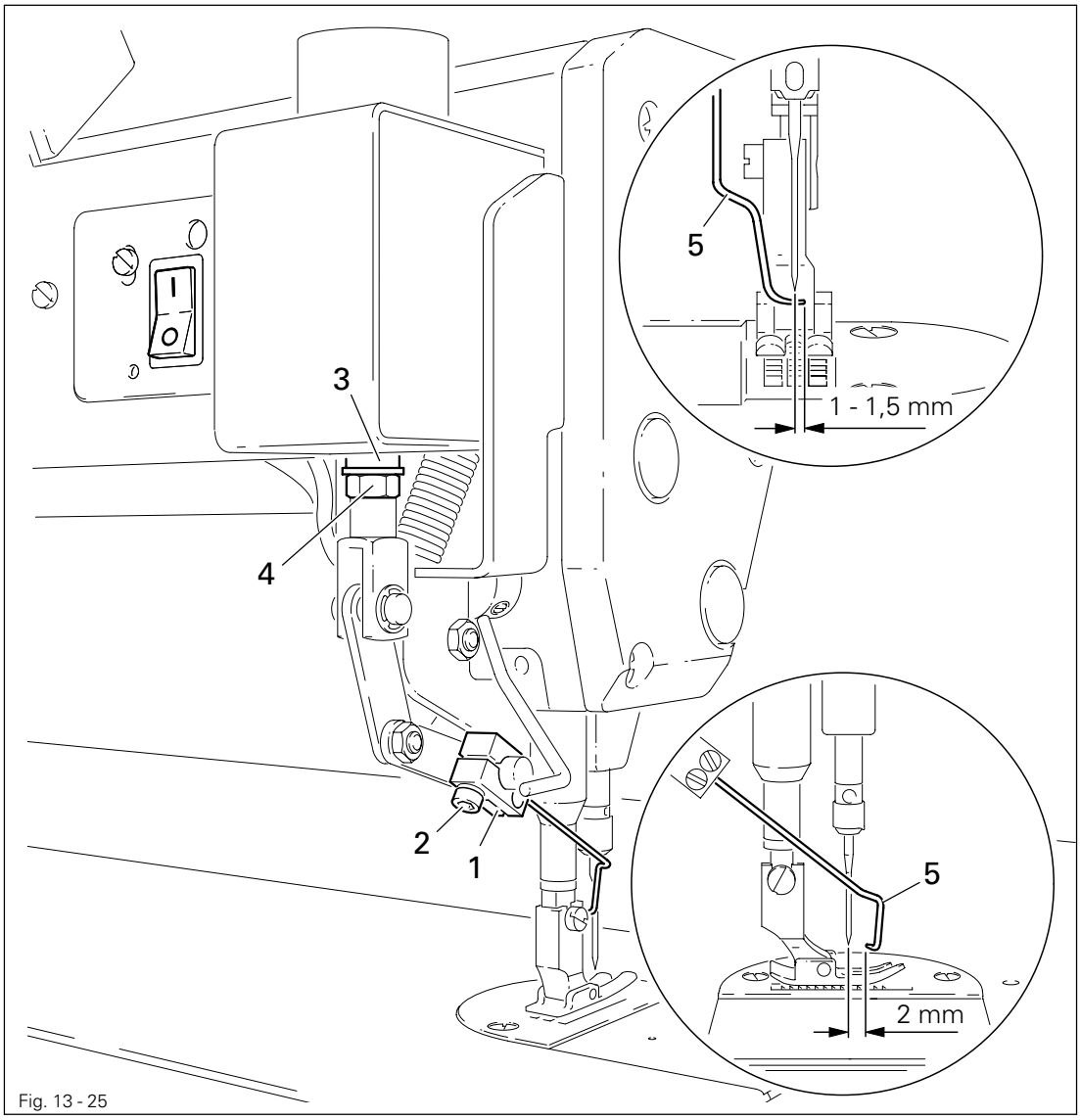

Fig. 13 - 25

- Slide bracket **1** (screw **2**), without turning it, on the shaft according to **requirement 1.**
- Turn rod **3** (nut **4**) according to **requirement 2**.

13.08 Aligning the light transmitter

Requirement
When the work is positioned, the transmitters **PS2** and **PS1** should display the same value (same receiving power).

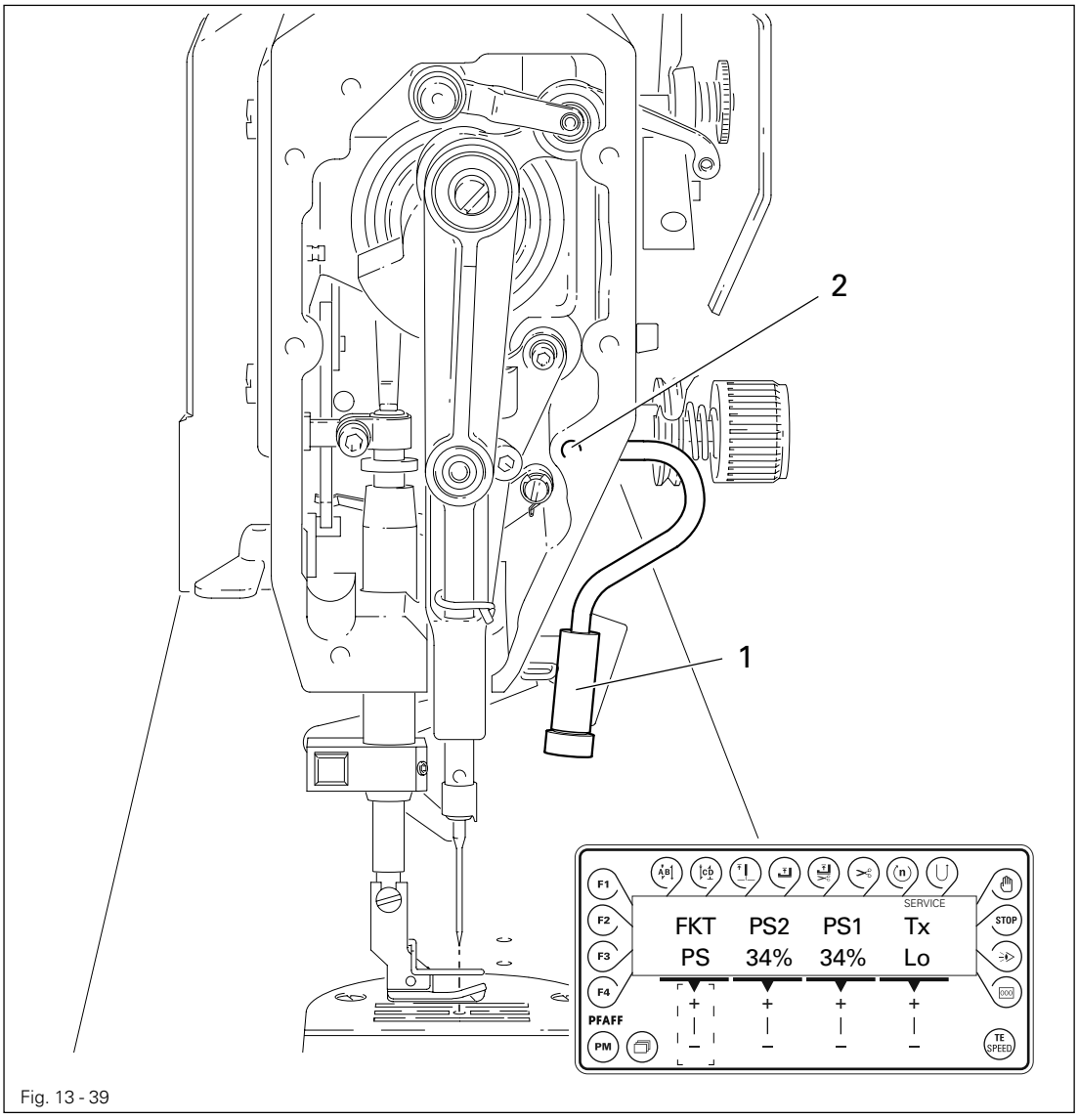

Fig. 13 - 39

- Switch on the machine.
- Select the "PS" function from the service menu, see **Chapter 13.13 Service functions.**
- Adjust light transmitter **1** (screw **2**) in accordance with the **requirement.**
- Switch off the machine.

13.09 Adjustment of the transmitted light sensors

Requirement
The difference between one and several material plies should be recognised.

- Switch on the machine.

F3

- Press the F3 key to select the menu for adjusting the transmitted light sensors.

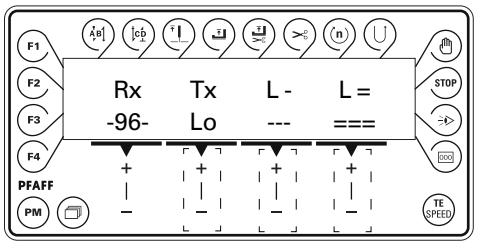

- Place one material ply under the sensors.

L -

- To start the adjustment for one material ply, press "+" on the corresponding +/- key.
- Move the material ply to and fro under the sensors for a short time.

L -

- To end the adjustment for one material ply, press "-" on the corresponding +/- key.
- Place material with two plies under the sensor.

L =

- To start the adjustment for two material plies, press "+" on the corresponding +/- key.
- Move the material plies to and fro under the sensors for a short time.

L =

- To end the adjustment for two material plies, press "-" on the corresponding +/- key.

Tx

- If necessary, increase or reduce the transmitting power with the corresponding +/- key.

F3

- Press the F3 key and sew a test seam.
- Switch off the machine.

13.10 Function control of the bobbin thread monitor

Requirement
When the thread is pulled, the value under "Rx" must change from "1" to "0" (perfect transmission of the incoming signal of the bobbin thread monitor).

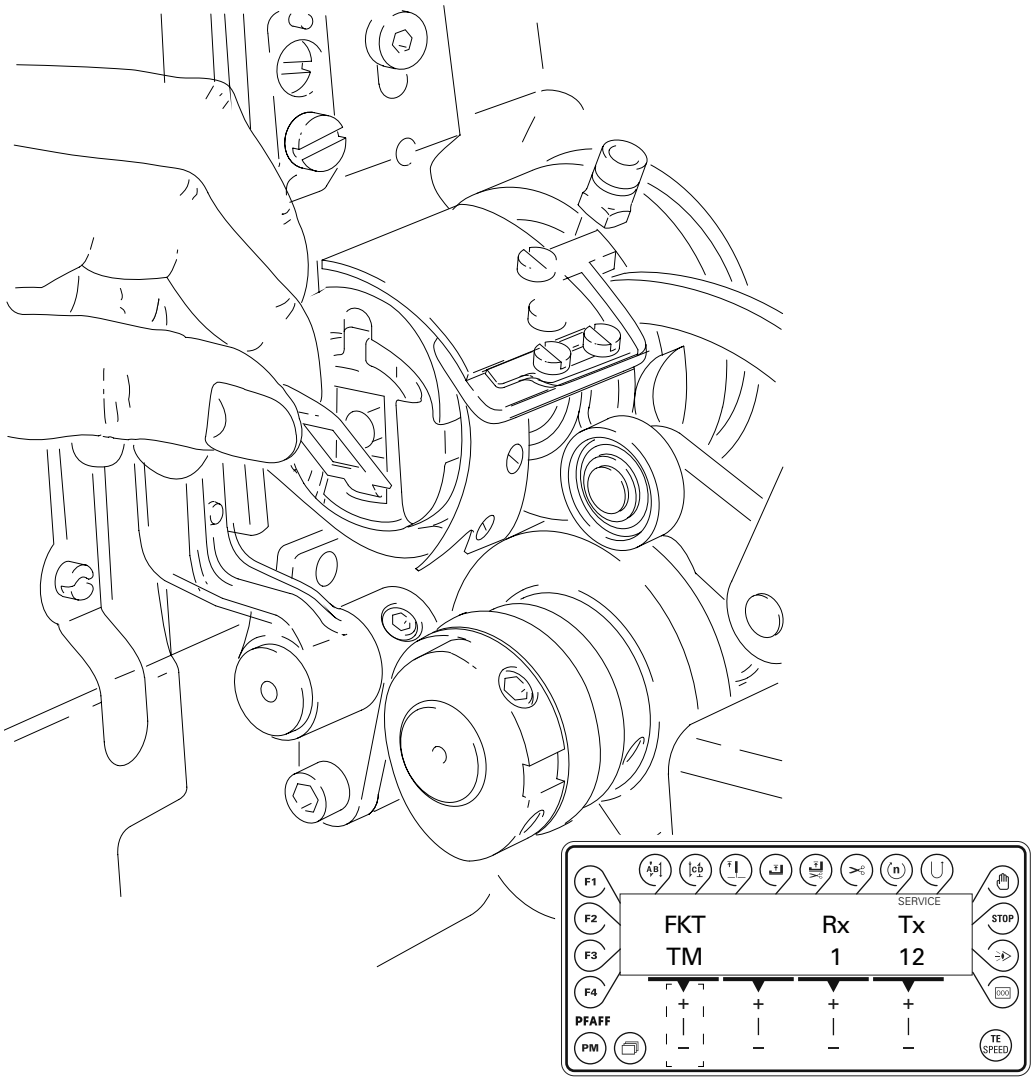

Fig. 13 - 40

- Place the bobbin in the bobbin case and the bobbin case in the hook.
- Switch on the machine.
- Select the "TM" function from the service menu, see **Chapter 13.13 Service functions.**
- Pull the thread by hand and check the **requirement.**

Tx
- If necessary, increase or reduce the transmitting power with the corresponding **+/- key.**
- Switch off the machine.

13.11 Parameter settings

13.11.01 Example of a parameter input

- Switch on the machine.

2 x TE SPEED

- Press the **TE/Speed** key twice to enter the parameter input function.
  The status text "TE" appears on the display and the pedal functions are blocked, to avoid the machine starting accidentally.

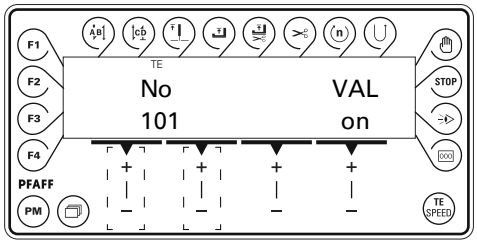

No

- Select the desired parameter, e.g. "**660**" bobbin thread control, by pressing the corresponding **plus/minus key.**

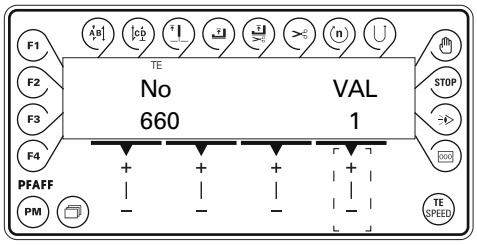

VAL

- With the corresponding **plus/minus key**, set the desired value for the parameter, e.g. "0" to switch off the bobbin thread control function.

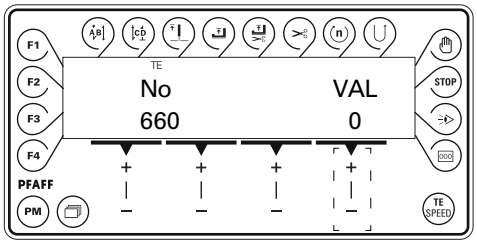

TE SPEED

- By pressing the **TE/Speed** key the value is taken over and the machine switches to the sewing mode.

13.11.02 Selecting the user level

- Switch on the machine.

2 x TE SPEED

- Press the **TE/Speed** key twice to call up the parameter input function.

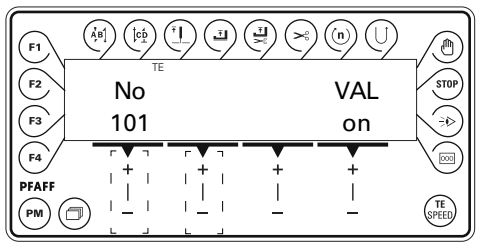

No

- Call up parameter "798" by pressing the corresponding **+/- key.**

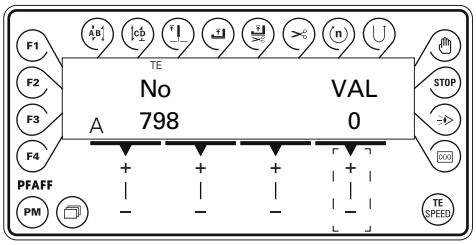

VAL

- By pressing the corresponding **+/- key** select the desired user level.
  "0" = Operator level **A**
  "1" = Mechanic level **B**
  "11" = Service level **C**
  The respective level is displayed on the screen (see arrow).

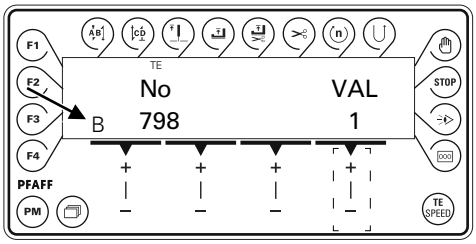

TE SPEED

- Press the **TE/Speed** key to take over the value and change to the sewing mode.

When the main switch is switched off, the machine changes automatically to user level **A.**

13.11.03 List of parameters

Group	Parameter	Description	User level	Setting range	Set value
0	10	Bobbin thread monitor-current level	C	8 - 16	12
	11	Bobbin thread monitor-stitch counter (starting value)	C	0 - 255	32
1	100	Control panel contrast [%]	A	90 - 110	100
	101	Control panel key response signal 0=tone off/1=tone off/key inverted 2=tone on/3=tone on/key inverted	A	0 - 3	2
	102	Start backtacks forwards	C	0 - 9	3
	103	Start backtacks in reverse	C	0 - 9	3
	105	Start backtacks speed	B	100 - 1500	900
	106	Start backtacks speed ON = pedal-controlled OFF = set with param. "105"	C	ON - OFF	OFF
	107	Pedal-controlled speed start backtacks ON = limited with parameter "105" OFF = limited with parameter "607"	C	ON - OFF	OFF
	108	End backtacks in reverse	C	0 - 9	3
	109	End backtacks forwards	C	0 - 9	3
	110	End backtacks speed	B	100 - 1500	1000
	111	No. of stitches from bright light barrier to seam end in manual sewing	A	1 - 255	6
	113	Start with light barrier ON = only when light barrier is dark OFF = also when light barrier is bright	B	ON - OFF	ON
	114	After light barrier or stitch counting ON = stop OFF = autom. end backtacks and seam end	C	ON - OFF	OFF
	116	Soft start stitches (soft start)	A	0 - 10	1
	117	Speed for soft start stitches	B	180 - 1200	400
	148	Start backtacks ON = double / OFF = single	A	ON - OFF	ON
	149	End backtacks ON = double / OFF = single	A	ON - OFF	ON

Group	Parameter	Description	User level	Setting range	Set value
1	199	Speed for light barrier compensating stitches [min-1]	B	300 - 1500	1200
2	206	Seam interruption with Pedal -2	C	ON - OFF	OFF
	220	Speed level 12 (Poti-reserve) [min-1]	A	300 - 5000	4500
	221	Speed limitation for seam programs [min-1]	B	300 - 5000	4500
	222	Speed constant for seam programs [min-1]	B	300 - 5000	3000
	298	Number of reduced stitches	A	1 - 3	1
	299	Edge guide position in manual sewing [1/10 mm]	A	10 - 185	185
3	323	Edge guide position min [1/10 mm]	B	10 - 50	10
	325	Edge guide position max [1/10 mm]	B	165 - 185	185
4	419	Bartacks: ON = inverted OFF = suppressed	C	ON - OFF	ON
	478	Corner stitch ON = accurate OFF = fast	C	ON - OFF	ON
	492	Number of seam programs	B	1 - 99	99
	493	Number of seam segments per seam program	B	1 - 15	15
5	554	Presser foot after seam segment with pedal forwards: ON = raised / OFF = lowered	C	ON - OFF	ON
	584	Backtack stitches ON = fourfold / OFF = normal	C	ON - OFF	OFF
6	601	Cutting:	C	ON - OFF	ON
	602	ON = Cutting with pedal -1 OFF = Cutting with pedal -2	C	ON - OFF	OFF
	603	ON = Pedal stops after cutting OFF = immediate start after end of seam	C	ON - OFF	ON
	604	Cutting: ON = forwards after semi end backtack OFF = in reverse too	C	ON - OFF	ON
	605	Speed display	B	ON - OFF	OFF

Group	Parameter	Description	User level	Setting range	Set value
6	606	Speed level 1 (min.) [min-1]	B	30 - 550	180
	607	Speed level 12 (max.) [min-1]	B	300 - 5000	4500
	609	Cutting speed [min-1]	B	60 - 500	180
	618	Reversing angle	C	ON - OFF	OFF
	624	Start inhibitor:	C	ON - OFF	ON
	642	Presser foot – time from switch-on to tension reduction (tacting)	C	10 - 50	50
	651	Automatic lowering of presser foot	C	ON - OFF	ON
	660	Bobbin thread monitoring 0 = off 1 = on 2 = bobbin thread reverse counter on	A	0 - 2	1
	668	Thread wiper = 1, Thread clamp = 2, off = 0	B	0 - 2	2
7	700	Logical zero mark [increments]	B	0 - 127	0
	702	Needle position (needle lowered)	B	0 - 30	15
	703	Needle position (take-up lever raised)	B	100 - 127	113
	705	Needle position (end of cutting signal)	B	80 - 127	98
	706	Needle position (start of cutting signal)	B	40 - 80	68
	707	Needle position (start thread tension release)	B	40 - 80	70
	710	Needle position (needle raised without cutting)	B	80 - 127	106
	715	Operating time thread wiper [ms]	B	0 - 2550	120
	718	Moment of standstill brake (rest brake)	B	0 - 100	0
	719	Presser foot-holding current	B	0 - 50	40
	720	Cutting–holding current	B	0 - 50	40
	721	Feed converter-holding current	C	0 - 50	40
	722	Acceleration ramp: 1 = flat, 50 = steep	C	1 - 50	50
	723	Brake ramp: 1 = flat, 50 = steep	C	4 - 50	50

Group	Parameter	Description	User level	Setting range	Set value
7	729	Start delay after lowering presser foot [ms]	B	0 - 2550	120
	730	Lift delay for presser foot after seam end [ms]	B	0 - 2550	0
	731	Stitch count delay for end backtack	C	0 - 2550	70
	732	Delay time for cutting after single end backtack [ms]	C	0 - 2550	30
	733	Delay time from switch on feed conversion to speed start [ms]	C	0 - 200	30
	739	Delay time for speed after start backtack or stitch condensation [ms]	C	0 - 2550	200
	740	Stitch count delay for end backtack [ms]	C	0 - 2550	60
	760	Stitch count to bobbin thread monitor (machine stop in needle lowered position)	A	0 - 50000	1000
	761	Extension thread tension release/pull thread [ms]	B	0 - 2550	0
	791	Stitch count delay for start backtack [ms]	C	0 - 2550	30
	797	Hardware test	B	ON - OFF	OFF
	798	User level 0 = user level A 1 = mechanic level C 11 = service level C	A	0 - 11	0
	799	Selected machine class 1 = 2481-980 2 = 2483-980 3 = 2438-980 4 = 2481-906	C	1 - 4	2
	800	Motor rotating direction when looking at V-Celt pulley 1= anti-clockwise, 0 = clockwise	C	ON - OFF	ON
8	801	Reversing angle (618 = ON)	C	5 - 106	16
	831	Start delay for stepping motor 2 [increments]	B	0 - 10	5
	832	Needle position (feed start)	B	0 - 127	77
	833	Needle position (feed end)	B	0 - 127	0
	834	Feed regulator-balance [1 semi-step = 5/100mm]	B	-5 - 5	0

Group	Parameter	Description	User level	Setting range	Set value
8	835	Reduced single stitch [%]	A	0 - 100	50
	843	Distance sensor 1 to sensor 2 [1/10mm]	B	75 - 85	80
	844	Distance sensor 1 to needle [2/10mm]			
		-980/31	B	80 - 300	200
		-980/33	B	80 - 300	100
	845	Speed-controlled stitch length adjustment [% pro 1000 min-1]	B	0 - 3	1
	846	Feed regulator characteristic line adjustment for forward stitch length [%]	A	80 - 110	▲
	847	Feed regulator characteristic line adjustment for reverse stitch length [%]	A	80 - 110	▲
	849	Maximum stitch length [1/10 mm]	A	0 - 60	25
	862	Current for stepping motor axis 1	A	16 - 63	32
	863	Current for current reduction of stepping motor axis 1	A	8 - 63	32
	864	Proportional amplification of the speed control (general)	B	0 - 2500	20
	880	Starting current main drive	C	1 - 10	8
	881	Filter parameter for position controller	C	0 - 12	5
	884	Proportional amplification of the speed control (general)	C	1 - 50	25
	885	Integral amplification of the speed control	C	1 - 50	35
	886	Proportional amplification of the position controller	C	1 - 50	30
	887	Differential amplification of the position controller	C	1 - 50	30
	889	Time for position control (0 = permanently)	C	0 - 2550	200
	890	Proportional amplification of higher ranking speed controller for standstill brake (rest brake)	C	1 - 50	25
	891	Proportional amplification of subordinate speed controller for standstill brake (rest brake)	C	1 - 50	20

▲ = By the factory adjusted

Group	Parameter	Description	User level	Setting range	Set value
9	901	Cutting release-speed	C	180 - 500	400
	956	Current for stepping motor axis 2	B	30 - 63	56
	957	Current for current reduction of stepping motor axis 2	B	15 - 48	39
	958	Current reduction time stepping motor axis 2	B	0 - 2500	2000
	978	Delay power off stepping motor 2	C	0 - 99	0
	979	Delay power off stepping motor 1	C	0 - 99	0
	985	Position for thread clamp on	B	0 - 127	34
	986	Position for thread clamp off	B	0 - 127	103

13.12 Explanation of the error messages

Message	Description
E001	Pedal not in neutral position
E003	SM 1 (for reference)
E004	SM 2 (for reference)
E009	Start inhibitor at standstill
E010	Incorrect machine class
E040	Transmitted light sensors
E045	Bobbin thread monitoring
E062	Short circuit 24V
E063	Overload switch power supply
E064	Network monitoring
E065	Extint low in operation
E066	Short circuit
E067	Power off
E068	Extint low in operation
E069	No increments
E070	Motor blocking
E071	No incremental connector
E072	No set value connector
E073	Motor running interrupted
E075	Controller locked
E092	Start inhibitor when motor running
E151	System
E155	Sewing motor
E156	Time out communication
E157	Stepping motor ramps

Message	Description
E158	Stepping motor frequency
E170	Incorrect main drive transmission
E171	Logical zero mark invalid
E172	Communication error main drive
E175	Main drive start
E200	Brake path too short
E201	Main drive position
E222	Time-out monitoring

13.13 Service functions

TE SPEED

F1

The service functions help with finding errors and commissioning. After selecting the input mode with the **TE/Speed** key, with the corresponding authorisation (access level B or C), the menu for selecting service functions can be called up by pressing the **F1** key. After the service functions have been called up, the status text "Service" appears on the display.

- Switch on the machine.

TE SPEED

- Press the **TE/Speed** key to call up the input mode.

F1

- Press the **F1** key within 5 seconds to call up the service functions.

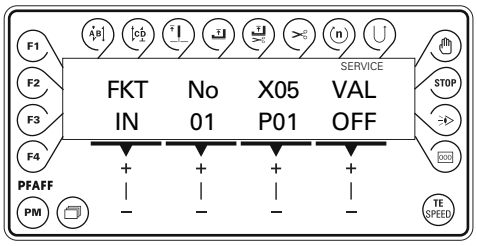

FKT

The individual service functions are shown under "FKT" and can be selected with the corresponding **+/- key.**

Overview of the service functions

FKT	Explanation
IN	Read out inputs With the corresponding **+/- key** the number of the input "No" can be selected.
OUT	Set/reset outputs With the corresponding **+/- key** the number of the output "No" can be selected and set accordingly "VAL" (ON/OFF).
PED	Read out set value transmitter pedal
POS	Read out main drive position
SM1	Move stepping motor SM1 (edge guide) By selecting the type „POS“ and entering the desired value with the corresponding **+/- keys**, the edge guide positions in the position entered. By selecting the type "REF" and confirming the selection with the corresponding **+/- keys**, the edge guide is moved to the reference position.

FKT	Explanation
SM2	Move stepping motor SM2 (feed regulator) By selecting the type "POS2 and entering the desired value with the corresponding **+/- keys**, the feed regulator positions in the position entered. By selecting the type "REF" and confirming the selection with the corresponding **+/- keys**, the feed regulator is moved to the reference position.
DM	Adjust main drive By selecting the type "POS" and entering the desired value with the corresponding **+/- keys**, the main drive positions in the position entered. By selecting the type "SPD" and entering the desired value with the corresponding **+/- keys**, the value for the speed is changed accordingly. By selecting the type "SC" and entering the desired value with the corresponding **+/- keys**, the value for the stitch count is changed accordingly.
RES	Carry out reset By selecting the type "PAR" and confirming the selection with the corresponding **+/- keys**, the values for all parameters are reset (master reset). By selecting the type "PRG" and confirming the selection with the corresponding **+/- keys**, all seam programs are deleted.
TM	Adjust bobbin thread monitor With the corresponding **+/- key** the transmitting power of the bobbin thread monitor "Tx" can be changed.
PS	Adjust transmitted light sensors With the corresponding **+/- key** the transmitting power of the transmitted light sensors "Tx" can be changed (Lo/Hi).
VER	Display software version

Plug assignment

CAN

Pin-No.	Comment	Function	Plug marking	Signal marking
X11A.2	CAN	CAN-	CAN_HIGH	CAN_TxD
X11A.3	CAN			Gnd
X11A.7	CAN	CAN+	CAN_LOW	CAN_RxD

Set value transmitters

Pin-No.	Comment	Function	Plug marking	Signal marking
X11B.4	pedal			+5V
X11B.5	pedal			+5V
X11B.6	pedal			Gnd
X11B.7	pedal 2	set value		SW2 (analog)
X11B.8	pedal 1	set value		SW1 (analog)
X11B.9	pedal			Gnd

Sensors

Pin-No.	Comment	Function	Plug marking	Signal marking
X15.1	Sensors	current source UFW		P7.3
X15.2	Sensors	DLS outside (LS2)		P5.3 (analog)
X15.3	Sensors	DLS inside (LS1)		P5.6 (analog)
X15.4	Sensors	ZZ-Sensor 2438	E9	E9/Port_E9
X15.5	Sensors	current source DLS	A10/PortA10	O10
X15.6	Sensors		+5V	+5V
X15.7	Sensors	UFW-Out		UFW_MESS
X15.8	Sensors		+24V	+24V
X15.9	Sensors		0V	0V

RS232

Pin-No.	Comment	Function	Plug marking	Signal marking
X1A.1	BDF-S2/T1		+24V	+24V
X1A.2	BDF-S2/T1		RxD	RxD
X1A.3	BDF-S2/T1		TxD	TxD
X1A.4	BDF-S2/T1		+5V	+5V
X1A.5	BDF-S2/T1		Gnd	Gnd
X1A.6	BDF-S2/T1		-	
X1A.7	BDF-S2/T1		RTS	RTS
X1A.8	BDF-S2/T1		CTS	CTS
X1A.9	BDF-S2/T1		Gnd	Gnd

OTE

Pin-No.	Comment	Function	Plug marking	Signal marking
X1B.1	OTE			Gnd
X1B.2	OTE	SSI-Out (TxD)		SSOut
X1B.3	OTE	SSI-Clock		SSClk
X1B.4	OTE			+24V
X1B.5	OTE			+5V
X1B.6	OTE	SSI-strobe (Mode)		SSStr
X1B.7	OTE	SSI-In (RxD)		SSIn
X1B.8	OTE	(light barrier 1)		(LS1)
X1B.9	OTE			

Incremental transmitter

Pin-No.	Comment	Function	Plug marking	Signal marking
X3.1	incr.transm.	track A 256inc./rev.		FA_MINI
X3.2	incr.transm.	track B 256inc./rev.		FB_MINI
X3.3	incr.transm.	SyMa 360°/256		
X3.4	incr.transm.	Autodetect		ADTC
X3.5	incr.transm.			+5V
X3.6	incr.transm.			+5V
X3.7	incr.transm.			Gnd
X3.8	incr.transm.	Ext. SyMa 180°		EXTSM_MINI
X3.9	incr.transm.			Gnd

Stepping motor 1 (edge guide)

Pin-No.	Comment	Function	Plug marking	Signal marking
X4B.1	SM1/FSL	phase A.2	A11	
X4B.2	SM1/FSL	phase A.1	A12	
X4B.3	SM1	phase B.2	A21	
X4B.4	SM1	phase B.1	A22	
X4B.5	SM1			
X4B.6	SM1			
X4B.7	SM1	+5V (with 120R ?)		
X4B.8	SM1	reference SM1	SM_REF1	SM_REF1
X4B.9	SM1	Gnd		

Stepping motor 2 (stitch length)

Pin-No.	Comment	Function	Plug marking	Signal marking
X4A.1	SM2	Phase A.2	B11	
X4A.2	SM2	Phase A.1	B12	
X4A.3	SM2	Phase B.2	B21	
X4A.4	SM2	Phase B.1	B22	
X4A.5	SM2			
X4A.6	SM2			
X4A.7	SM2	+5V (with 120R ?)		
X4A.8	SM2	reference SM2	SM_REF2	SM_REF2
X4A.9	SM2	Gnd		

Outputs

Pin-No.	Comment	Function	Plug marking	Signal marking
X13.01	PWM	FSL-solenoid(Y8)	A1	O1.1
X13.02		FSL-solenoid(Y8+)	A1	O1.2
X13.03	PWM	PFH-solenoid(Y4)	A2	O2.1
X13.04		PFH-solenoid(Y4+)	A2	O2.2
X13.05		WI-solenoid(Y3)	A3	O3
X13.06	PWM	SN-solenoid(Y2)	A4	O4
X13.07			A5	O5
X13.08		RAFI-LED(H1)	A6	O6
X13.09			A7	O7
X13.10			A8	O8
X13.11			A9	O9
X13.12	(from DX)	current source DLS	A10/PortA10	O10
X13.13			A11	O11
X13.14			+24V	+24V
X13.15			+24V	+24V
X13.16			A14	O14
X13.17			A15	O15
X13.18			A16	O16
X13.19		SN-solenoid(Y2+)	+24V	+24V
X13.20		WI-solenoid(Y3+)	+24V	+24V
X13.21			+24V	+24V
X13.22		RAFI-LED(H1+)	+24V	+24V
X13.23			+24V	+24V
X13.24			A13	O13
X13.25			A12	O12

Inputs

Pin-No.	Comment	Function	Plug marking	Signal marking
X5.01		TUM-key(S1)	E1	E7
X5.02		NPW-key(S2)	E2	E8
X5.03		EST-key(S2)	E3	E2
X5.04		ANLSP-switch(S14)	E4	E4
X5.05		EST-knee switch(S13)	E5	E5
X5.06		knee switch2	E15	E15
X5.07			E16	E16
X5.08			E14	E14
X5.09	(from DX)	ZZ-Sensor 2438	E9	E9/Port_E9
X5.10			E10	E10
X5.11			E11	E11
X5.12			E12	E12
X5.13			E13	E13
X5.14			E6	E6
X5.15			E7	E1
X5.16			E8	E3
X5.17		S1-S2-S3(Gnd)	0V	0V
X5.18			0V	0V
X5.19		ANLSP-switch(Gnd)	0V	0V
X5.20		EST-knee switch(Gnd)	0V	0V
X5.21			0V	0V
X5.22			0V	0V
X5.23			+24V	+24V
X5.24			A16	output_A16
X5.25			+24V	+24V

13.14 Internet update of the machine software

The machine software can be updated with PFAFF flash programming. For this purpose the PFP boot program and the appropriate control software for the machine type must be installed on a PC. To transfer the data to the machine, the PC and the machine control unit must be connected with an appropriate null modem cable (part no. 91-291 998-91).

The PFP boot program and the control software of the machine type can be downloaded from the PFAFF-homepage using the following path:
www.pfaff-industrial.com/de/service/download/steuerungssoftware.html

To update the machine software carry out the following steps:

While the machine software is being updated, no setting up, maintenance or adjustment work may be carried out on the machine!

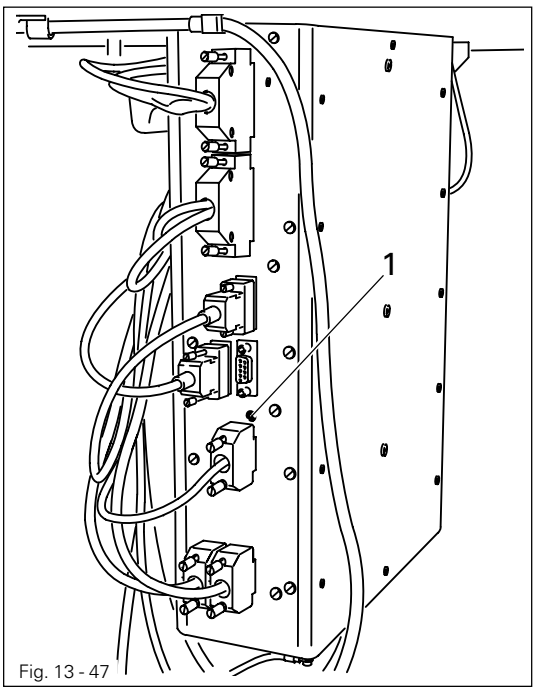

Fig. 13 - 47

- Switch off the machine.
- Connect the PC (serial interface or appropriate USB-adapter) and the machine control unit (RS232). To do so disconnect the plug of the control panel.
- Switch on the PC and start the PFP boot program.
- Select the machine type.
- Press the "programming" button.
- Hold down boot key **1** and switch on the machine.
- Press the "OK" button.
- The software update is carried out, the update progress is shown on the bar display of thePFP boot program.
- During the up-dating procedure the machine must not be switched off.
- When the update has been completed, switch off the machine and end the PFP boot program.
- End the connection between the PC and the machine control unit and reconnect the control panel to the machine control unit.
- Switch on the machine.
  A plausibility control is carried out and, if necessary, a cold start.

More information and assistance is at your disposal in the file "PFPHILFE.TXT", which can be called up from the PFP boot program by pressing the "help" button.

14 Wearing parts

This list indicates the most important wearing parts.
You can request a detailed parts list for the complete machine under parts number 296-12-18 760.

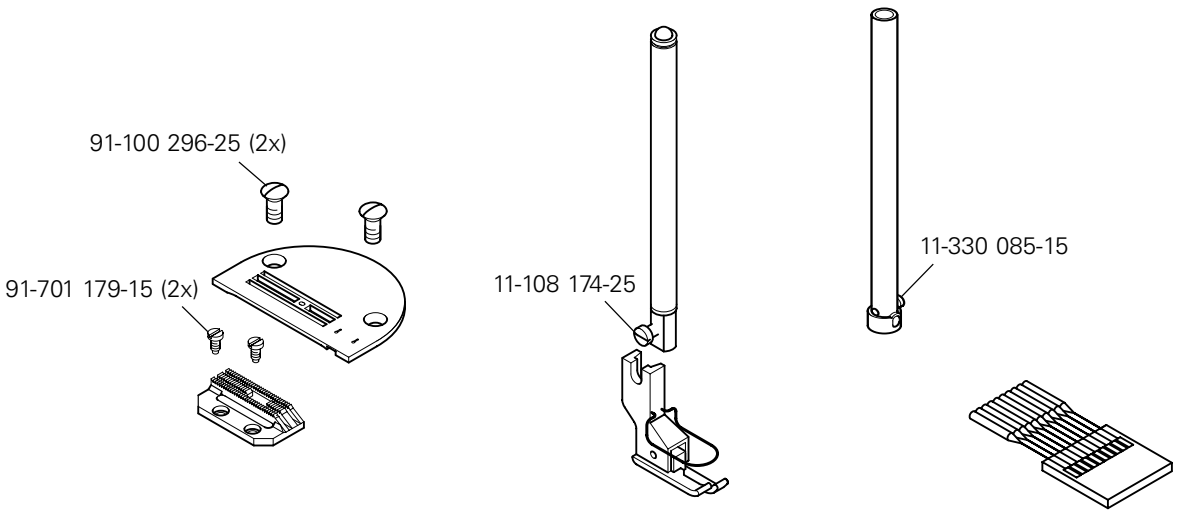

System 134

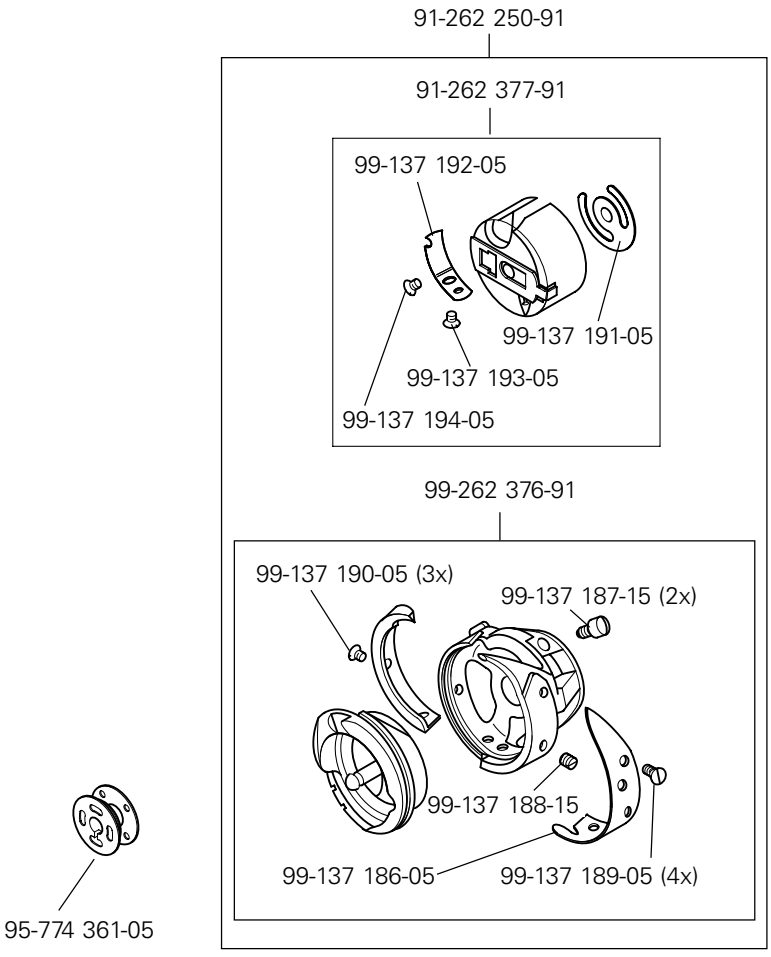

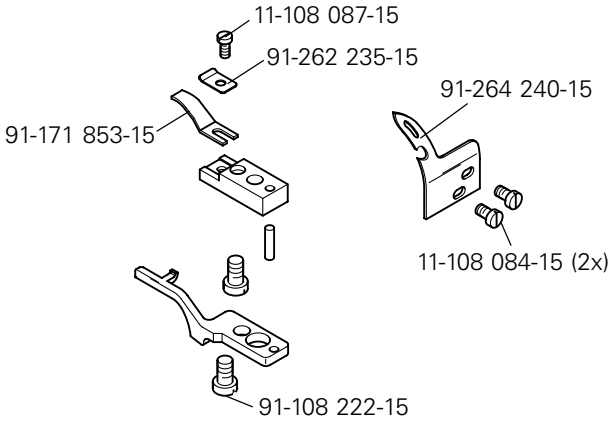
11-108 087-15
91-262 235-15
91-264 240-15
91-171 853-15
11-108 084-15 (2x)
91-108 222-15

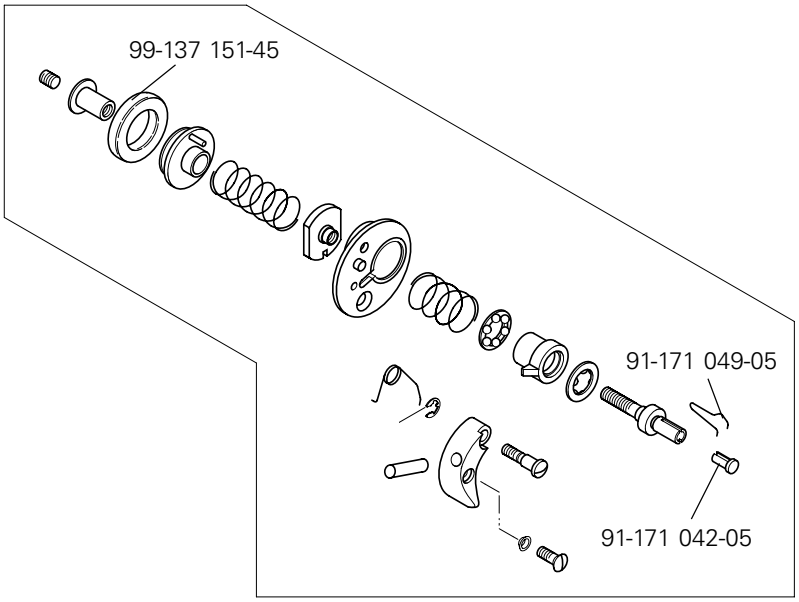
99-137 151-45
91-171 049-05
91-171 042-05

15 Circuit diagrams

Reference list for circuit diagrams

A1	Controller Quick P322MS
A2	Control panel BDF S2
A3	Incremental transmitter (included in M1)
A4	Keyboard
A11	Light transmitter
A12	Light receiver
or	
A12	Light receiver
A13	Bobbin thread monitor
A14	Sewing head identification
S1	Set value transmitter
S10	Single stitch (included in A4)
S11	Backtacking by hand (backtack) (included in A4)
S12	Needle position (included in A4)
S13	Knee switch (single stitch)
S14	Start inhibitor
S15	2nd knee switch
H1	Sewing lamp
H10	Bobbin thread alarm (included in A4)
Q1	Main switch
M1	Sewing motor
M10	Stepping motor (feed regulator)
M11	Stepping motor (edge guide)
B10	Hybrid light barrier (included in M10)
Y2	900 (thread trimmer)
Y3	W1 (thread wiper)
Y4	Automatic presser foot lift
Y8	Thread tension release
X40	Zigzag sensor
X41	Light transmitter
X42	Light receiver
X43	Bobbin thread monitor

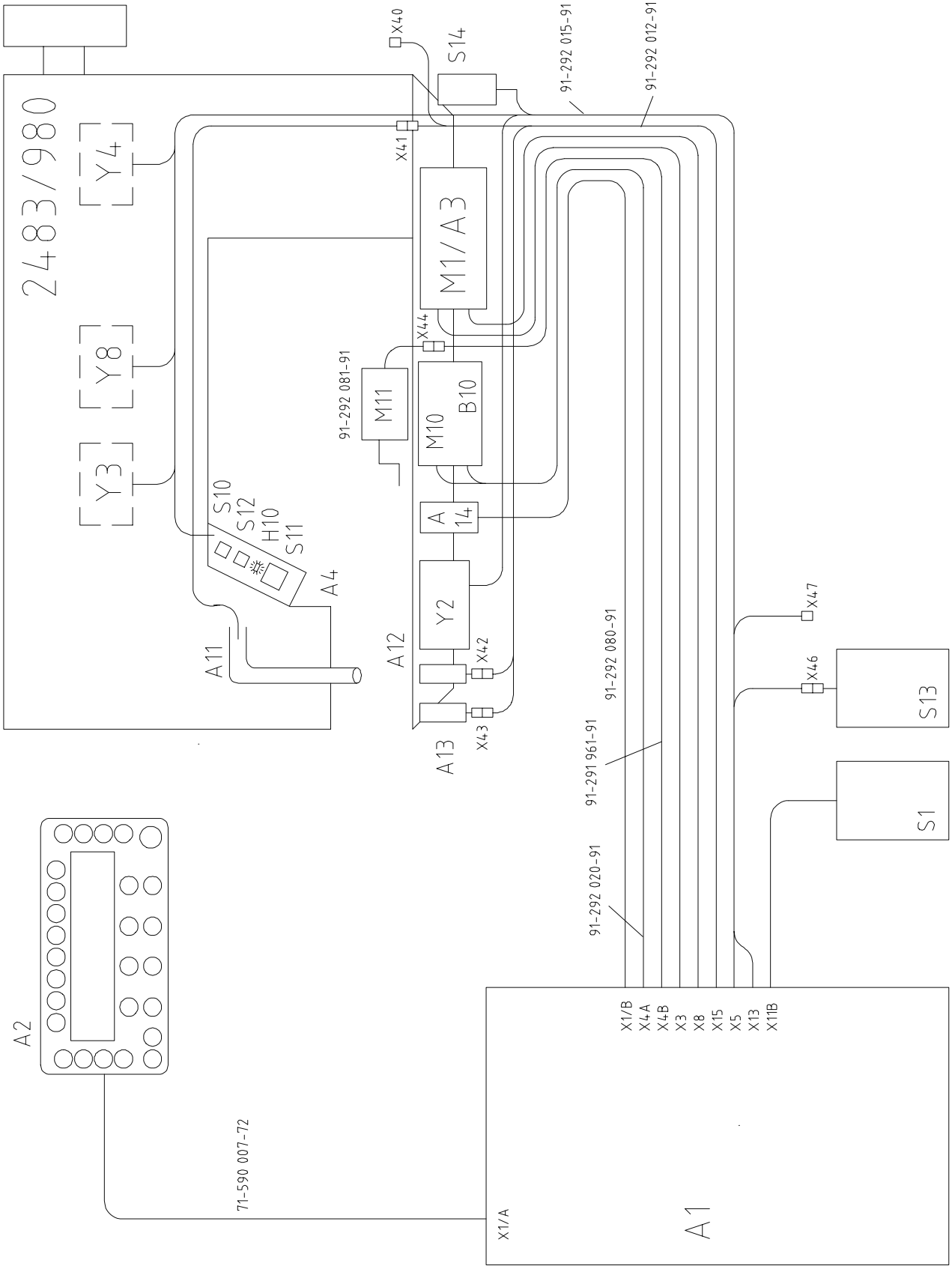
2483/980
Y4
Y8
Y3
S10
S12
H10
S11
A4
A11
X40
S14
91-292 015-91
91-292 012-91
X41
M11/A3
X44
91-292 081-91
M11
M10
B10
A
14
Y2
A12
X42
X43
A13
X47
X46
S13
S1
91-292 080-91
91-291 961-91
91-292 020-91
A2
71-590 007-72
X1/B
X4A
X4B
X3
X8
X15
X5
X13
X11B
X1/A
A1

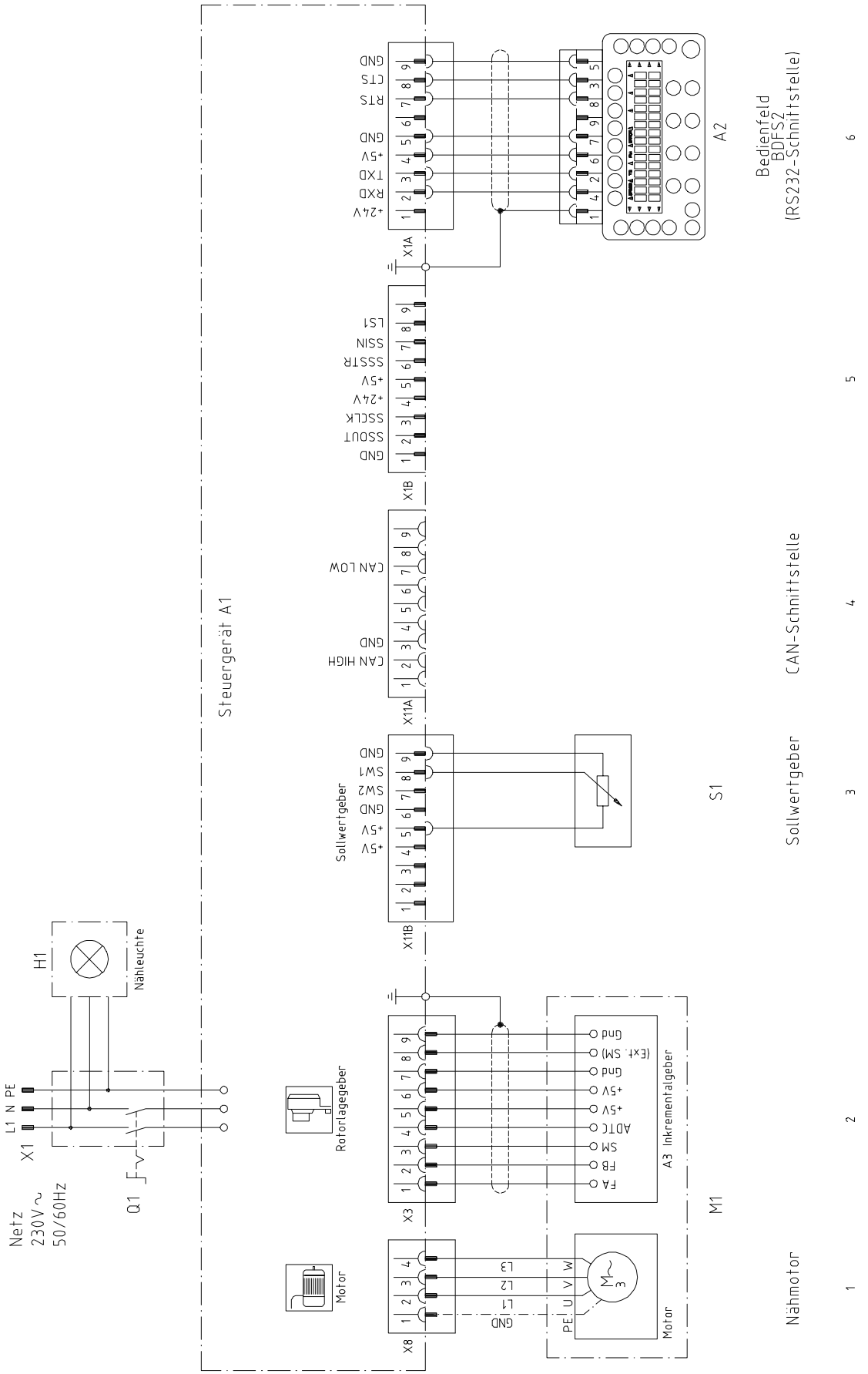
Steuergerät A1
Bedienfeld BDFS2 (RS232-Schnittstelle)
A2
X1A
+24V
RXD
TXD
+5V
GND
RTS
CTS
GND
X1B
GND
SSOUT
SSCLK
+24V
+5V
SSSTR
SSIN
LS1
CAN-Schnittstelle
X11A
CAN HIGH
GND
CAN LOW
Sollwertgeber
S1
X11B
+5V
+5V
GND
GND
SW2
SW1
GND
Nähmotor
M1
X8
GND
L1
L2
L3
Motor
PE U V W
A3 Inkrementalgeber
X3
FA
FB
SM
ADTC
+5V
+5V
Gnd
Gnd
(Ext. SM)
Gnd
Rotortagegeber
Motor
H1
Nähleuchte
Netz 230V~ 50/60Hz
X1
L1 N PE
Q1
1
2
3
4
5
6

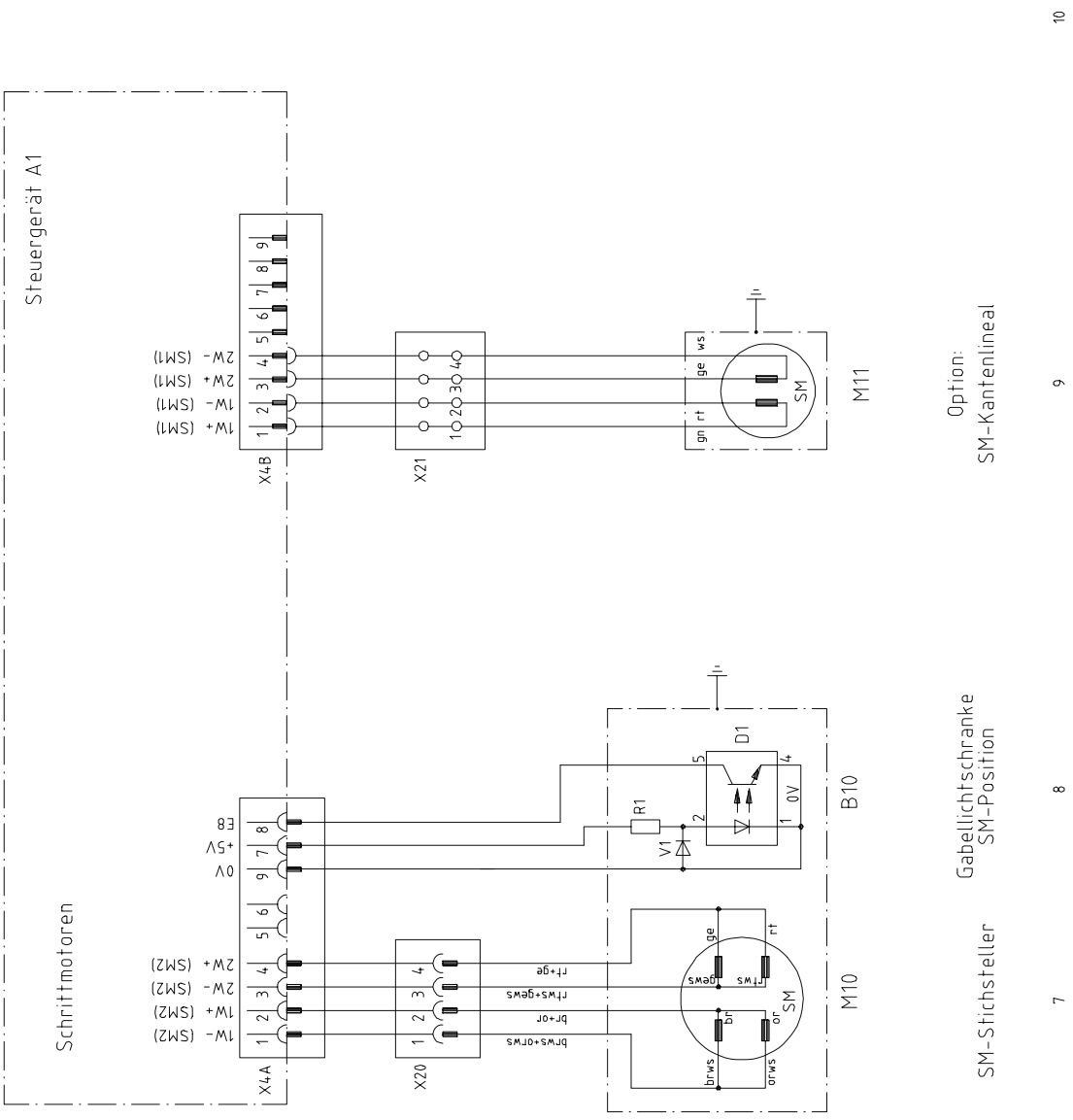
Steuergerät A1
Schrittmotoren
X4A
X4B
X20
X21
1W- (SM2)
1W+ (SM2)
2W- (SM2)
2W+ (SM2)
0V
+5V
E8
1W+ (SM1)
1W- (SM1)
2W+ (SM1)
2W- (SM1)
brws+orws
br+or
rt+ge
rtws+gews
M10
M11
B10
SM
SM
D1
R1
V1
0V
SM-Stichsteller
Gabellichtschranke
SM-Position
Option:
SM-Kantenlineal
7
8
9
10

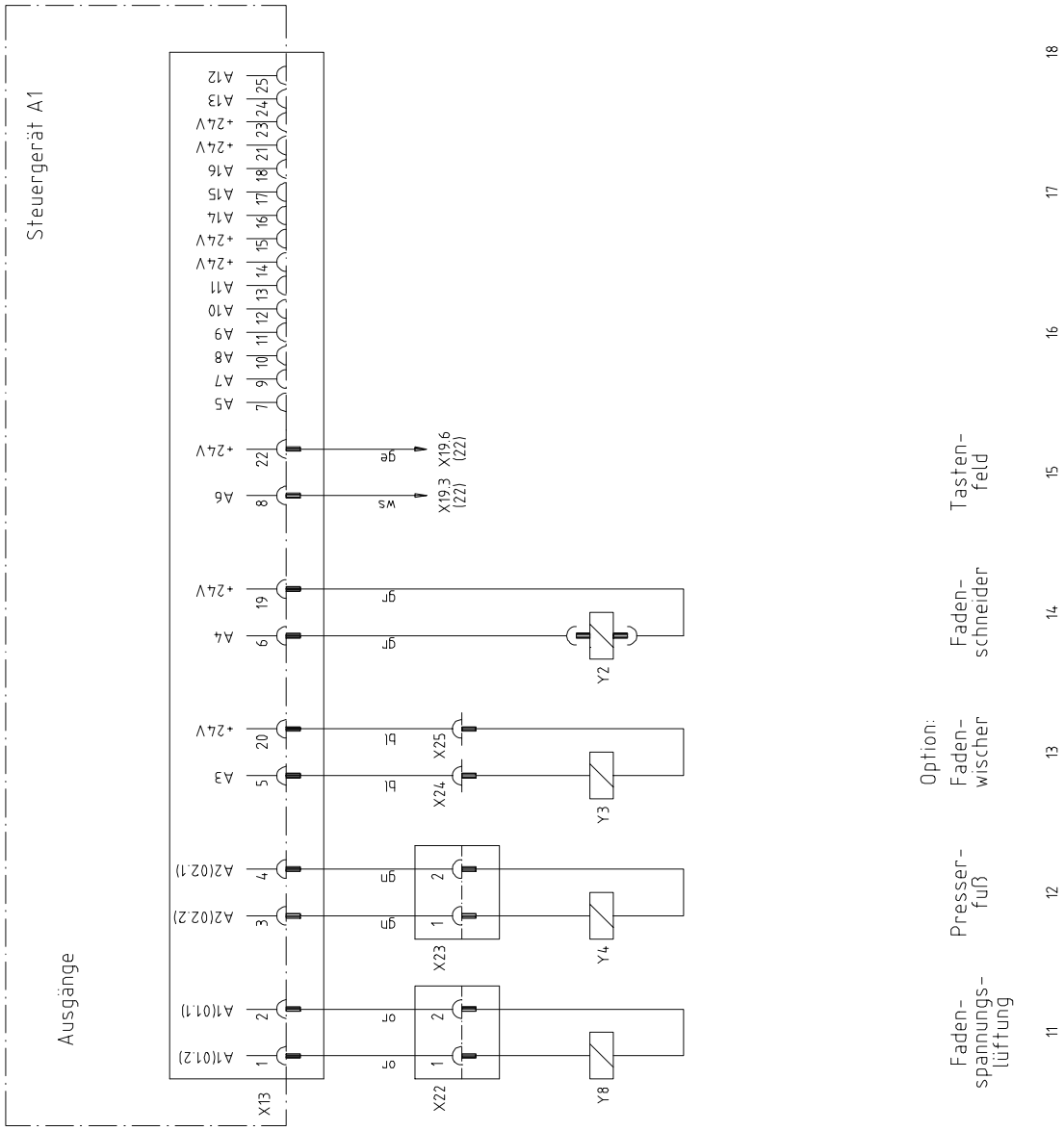
Steuergerät A1
Ausgänge
X13
A12
A13
+24V
+24V
A16
A15
A14
+24V
+24V
A11
A10
A9
A8
A7
A5
+24V
A6
+24V
A4
+24V
A3
A2(02.1)
A2(02.2)
A1(01.1)
A1(01.2)
X19.6 (22)
X19.3 (22)
X25
X24
X23
X22
Y2
Y3
Y4
Y8
Option:
Faden-spannungs-lüftung
Presser-fuß
Faden-wischer
Faden-schneider
Tasten-feld
11
12
13
14
15
16
17
18

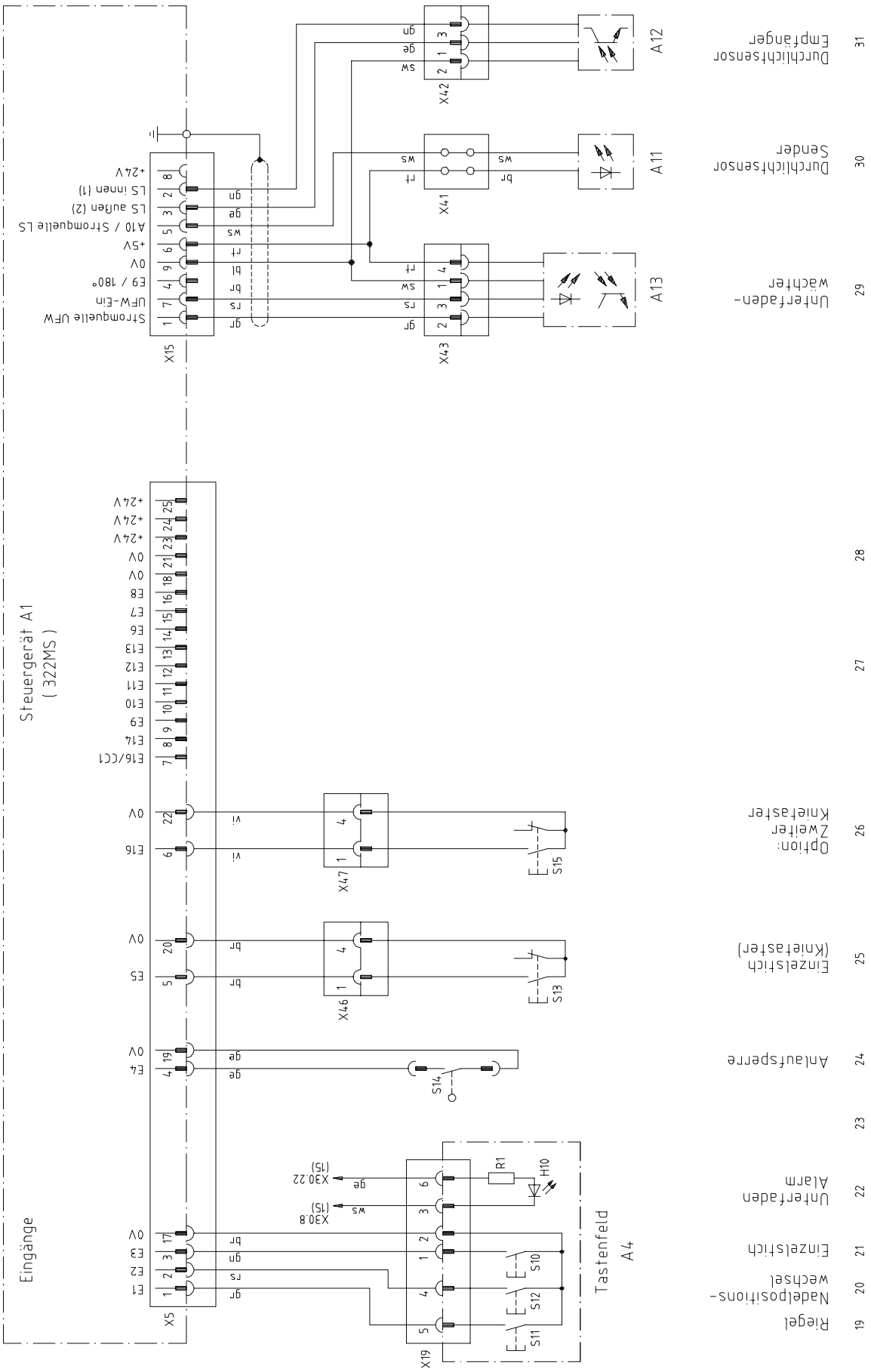
Steuergerät A1
(322MS)
Eingänge
Tastenfeld
A4
Durchlichtsensor
Empfänger
Durchlichtsensor
Sender
Unterfaden-
wächter
Option:
Zweiter
Knietaster
Einzelstich
(Knietaster)
Anlaufsperre
Unterfaden
Alarm
Einzelstich
Nadelpositions-
wechsel
Riegel
Stromquelle UFW
UFW-Ein
E9 / 180°
0V
+5V
A10 / Stromquelle LS
LS außen (2)
LS innen (1)
+24V
E16/CC1
E14
E9
E10
E11
E12
E13
E6
E7
E8
E1
E2
E3
E4
E5
S10
S11
S12
S13
S14
S15
R1
H10
A11
A12
A13
X15
X41
X42
X43
X46
X47
X5
X19
X30.8 (15)
X30.22 (15)

PFAFF® Industrial



Europäische Union
Wachstum durch Innovation – EFRE



PFAFF Industriesysteme
und Maschinen AG

Hans-Geiger-Str. 12 - IG Nord
D-67661 Kaiserslautern

Phone: +49-631 200-0
Fax: +49-631 17202
E-mail: info@pfaff-industrial.com

Hotlines:
Technical service: +49-175/2243-101
Application consultance: +49-175/2243-102
Spare-parts hotline: +49-175/2243-103

Printed in Germany