PFAFF® Industrial

POWERLine

2595
2596

ADJUSTMENT MANUAL

This Adjustment Manual is valid for machines from the following serial numbers onwards:

2 767 267 ⟶

296-12-19 007/002
Justieranleitung 09.12

The reprinting, copying or translation of PFAFF Adjustment Manuals, whether in whole or in part, is only permitted with our previous authorization and with written reference to the source.

PFAFF Industriesysteme
und Maschinen AG

Hans-Geiger-Str. 12 - IG Nord
D-67661 Kaiserslautern

Contents ..... Page

1	**Adjustment**	**4**
1.01	Notes on adjustment	4
1.02	Tools, gauges and other accessories for adjusting	4
1.03	Abbreviations	4
1.04	Explanation of the symbols	4
1.05	Adjusting the basic machine	5
1.05.01	Basic position of the balance wheel (adjustment aid)	5
1.05.02	Balance weight	6
1.05.03	Zero position of the unison feed	7
1.05.04	Feeding motion of the unison feed	8
1.05.05	Lifting motion of the bottom feed dog	9
1.05.06	Height of the bottom feed dog	10
1.05.07	Feeding stroke difference	11
1.05.08	Top feed stroke	12
1.05.09	Top-feed lifting motion	13
1.05.10	Preliminary adjustment of the needle height	14
1.05.11	Needle rise, hook clearance, needle height and needle guard	15
1.05.12	Bobbin lift travel	16
1.05.13	Adjusting the shortened trim stitch	17
1.05.14	Bobbin winder	18
1.05.15	Thread check spring and thread regulator	19
1.05.16	Sewing foot pressure	20
1.05.17	Lubrication	21
1.05.18	Limiting the stitch length	22
1.05.19	Re-engaging the slip-clutch	23
1.06	Adjusting the thread trimmer -900/81	24
1.06.01	Resting position of roller lever/radial position of control cam	24
1.06.02	Position and height of the thread catcher	25
1.06.03	Knife pressure	26
1.06.04	Bobbin thread clamp spring	27
1.06.05	Manual cutting test	28
1.07	Parameter list	29
2	**Circuit diagrams**	**30**
2.01	Block diagram PFAFF 2595 2596 PLUS with control pack P74 ED-L	30
2.02	Circuit diagrams PFAFF 2595 and 2596 PLUS	31

1 Adjustment



Please observe all notes from Chapter **1 Safety** of the instruction manual!
In particular care must be taken to see that all protective devices are refitted properly after adjustment, see Chapter **1.06 Danger warnings** of the instruction manual!



If not otherwise stated, the machine must be disconnected from the electrical power supply. Danger of injury due to unintentional starting of the machine!

1.01 Notes on adjustment

All following adjustments are based on a fully assembled machine and may only be carried out by expert staff trained for this purpose.
Machine covers, which have to be removed and replaced to carry out checks and adjustments, are not mentioned in the text.
The order of the following chapters corresponds to the most logical work sequence for machines which have to be completely adjusted. If only specific individual work steps are carried out, both the preceding and following chapters must be observed.
Screws, nuts indicated in brackets ( ) are fastenings for machine parts, which must be loosened before adjustment and tightened again afterwards.

1.02 Tools, gauges and other accessories for adjusting

- Screwdrivers with blade width from **2** to **10 mm**
- Spanners (wrenches) with jaw width from **7** to **14 mm**
- **1** set Allen keys from **1.5** to **6 mm**
- **1** gauge for the top feed stroke **5.0 mm** (Part No. **61-111 633-60**)
- **1** feed dog adjustment gauge, Part No. **61-111 689-04**
- Metal rule (part No. **08-880 218-00**)
- Sewing thread and test materials

1.03 Abbreviations

t.d.c. = top dead centre
b.d.c. = bottom dead centre

1.04 Explanation of the symbols

In this adjustment manual, symbols emphasize operations to be carried out or important information. The symbols used have the following meaning:



Note, information

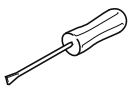

Service, repair, adjustment, maintenance
(work to be carried out by qualified staff only)

1.05 Adjusting the basic machine

1.05.01 Basic position of the balance wheel (adjustment aid)

Requirement
When the needle bar is positioned at t.d.c., the marking "**0**" on the scale should be level with the top edge of the belt guard (see arrow).

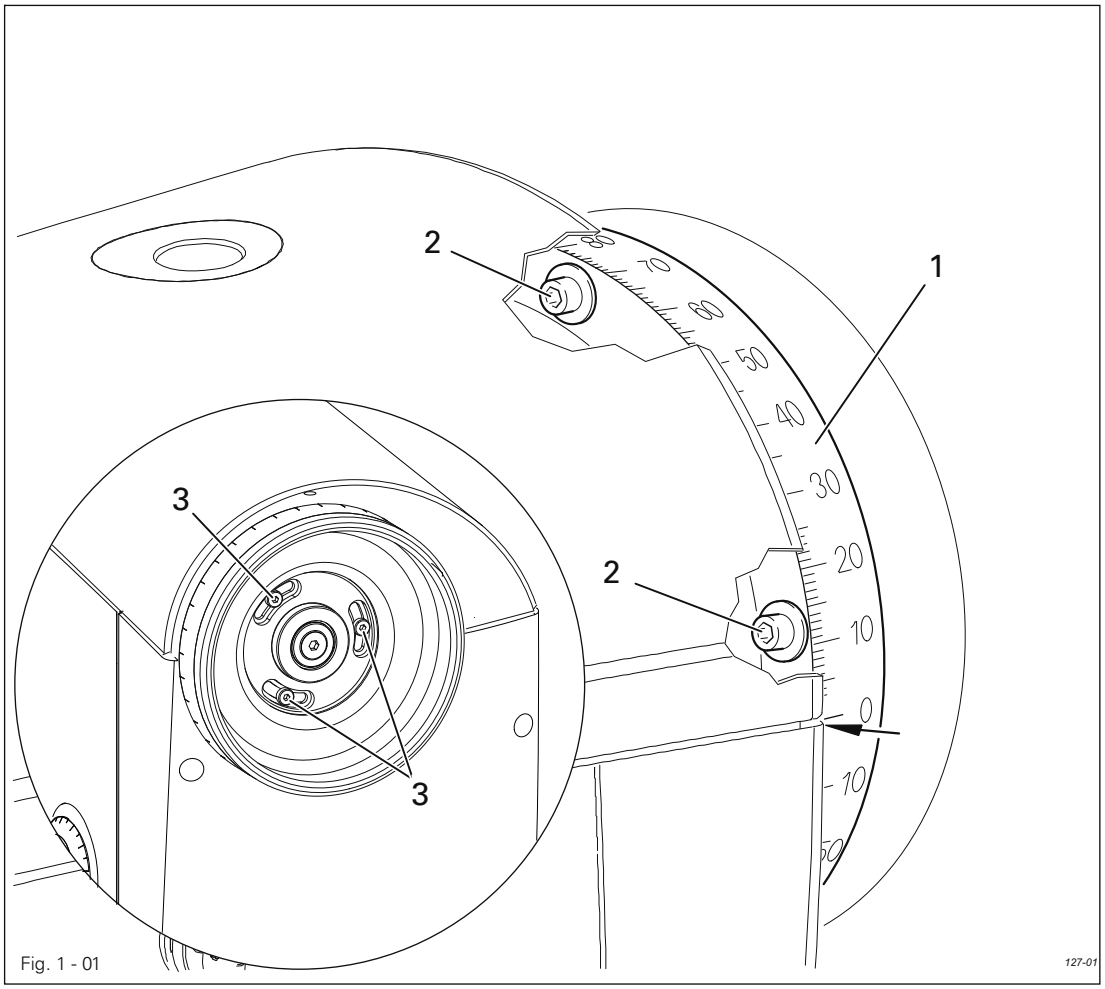

Fig. 1 - 01

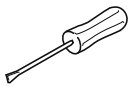

- Adjust the scale dial **1** (depending on model screws **2** or **3**) in accordance with the requirement.

1.05.02 Balance weight

Requirement
When the needle bar is positioned at b.d.c. (balance wheel position 180°) the largest eccentricity of the balance weight **1** should be at the top.

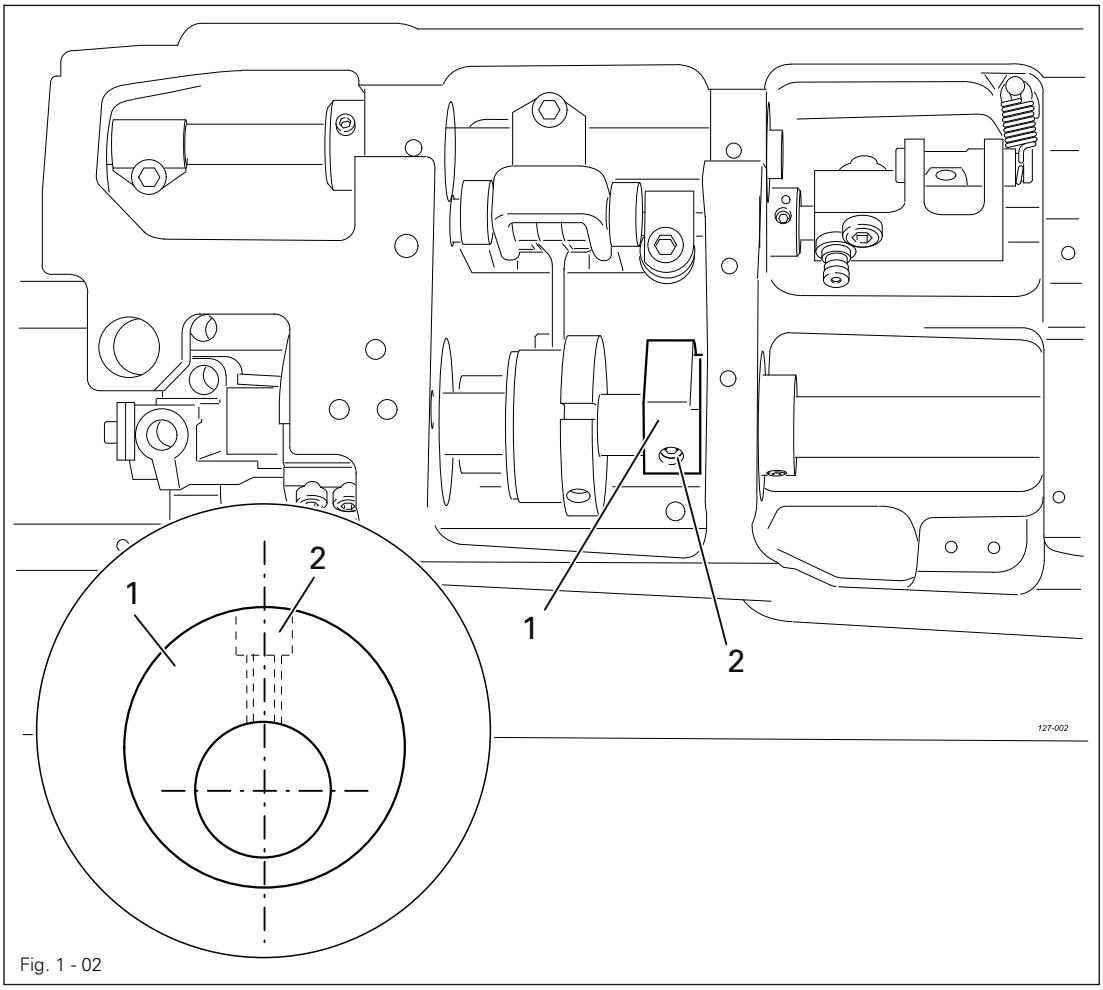

Fig. 1 - 02

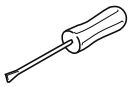

- Adjust balance weight **1** (screw **2**) in accordance with the **requirement**.

1.05.03 Zero position of the unison feed

Requirement
When the stitch length is set at "**0**", the top and bottom feed dogs and the needle bar should not make any feeding motion when the balance wheel is turned.

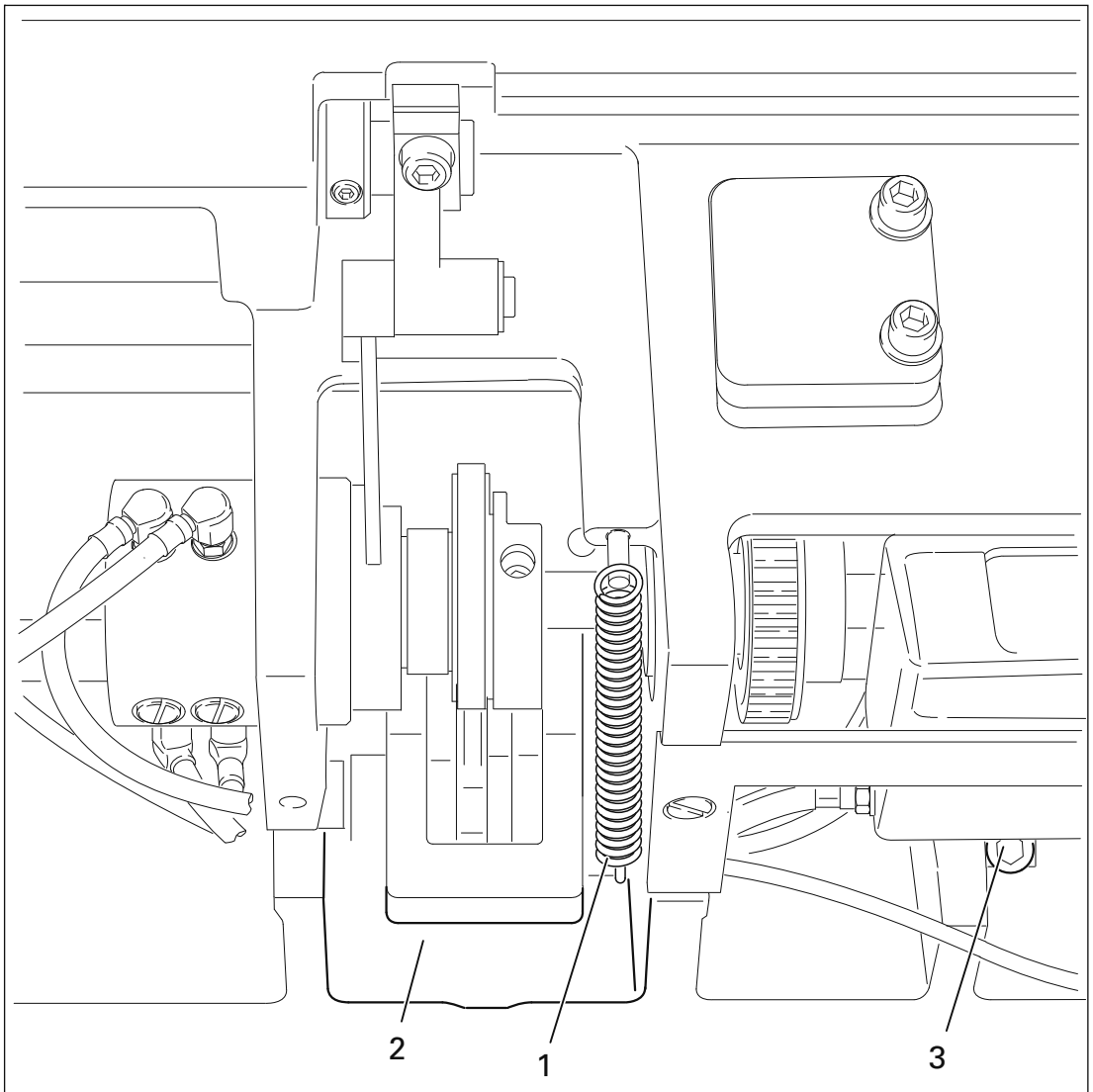

Fig. 1 - 03

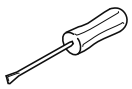

- Remove spring **1**.
- Adjust crank **2** (screw **3**) in accordance with the **requirement**.
- Replace the spring **1**.

1.05.04 Feeding motion of the unison feed

Requirement
When the needle bar is positioned at b.d.c. (balance wheel position **180**°), and the maximum stitch length is set, the top and bottom feed dogs and the needle bar should not make any feeding motion when the reverse-feed lever is pressed.

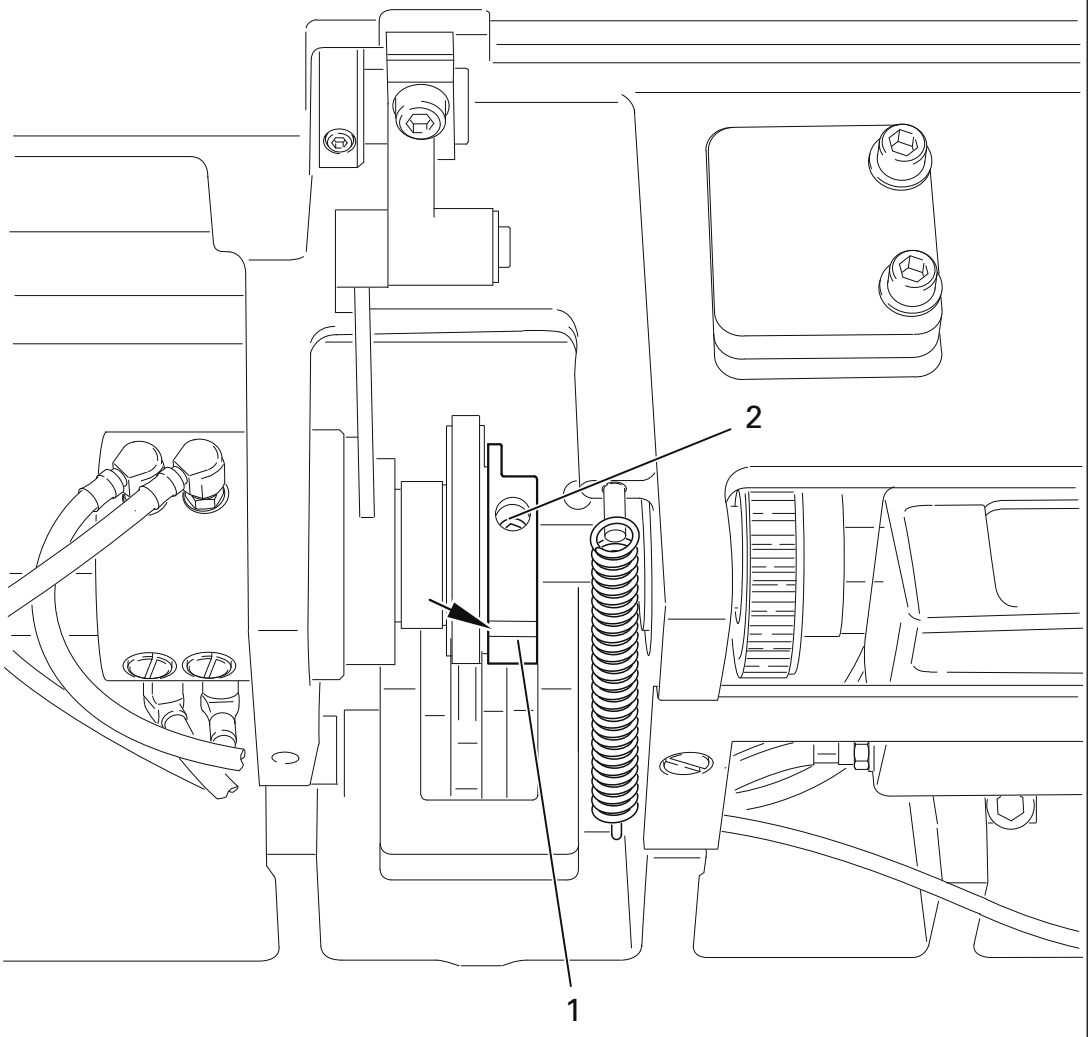

Fig. 1 - 04

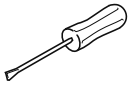

- Adjust eccentric **1** (screws **2**) in accordance with the **requirement**. Make sure that the cut-out (see arrow) is visible.

1.05.05 Lifting motion of the bottom feed dog

Requirement
When the balance wheel is positioned at **180**°, the feed dog should be at t.d.c.

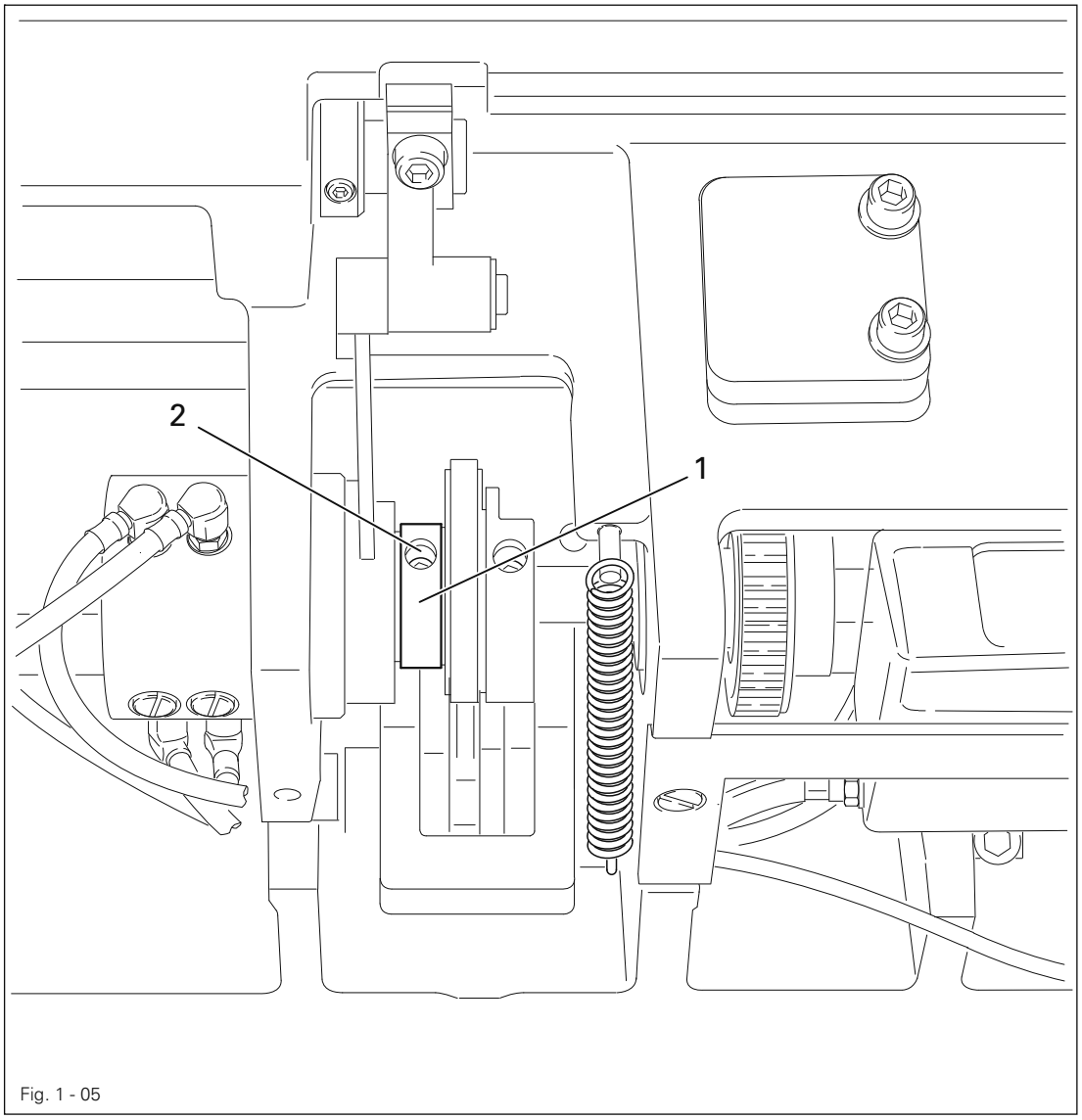

Fig. 1 - 05

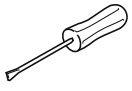

- Adjust eccentric **1** (screws **2**) in accordance with the **requirement**.

1.05.06 Height of the bottom feed dog

Requirement

1. When the needle bar is positioned at b.d.c. (balance wheel position **180°**), the bottom feed dog should be positioned **0.5 mm** horizontally above the top edge of the needle plate, when crank **6** is in the centre of the slot.
2. In the direction of sewing, the bottom feed dog should be positioned in the centre of the needle plate slot.

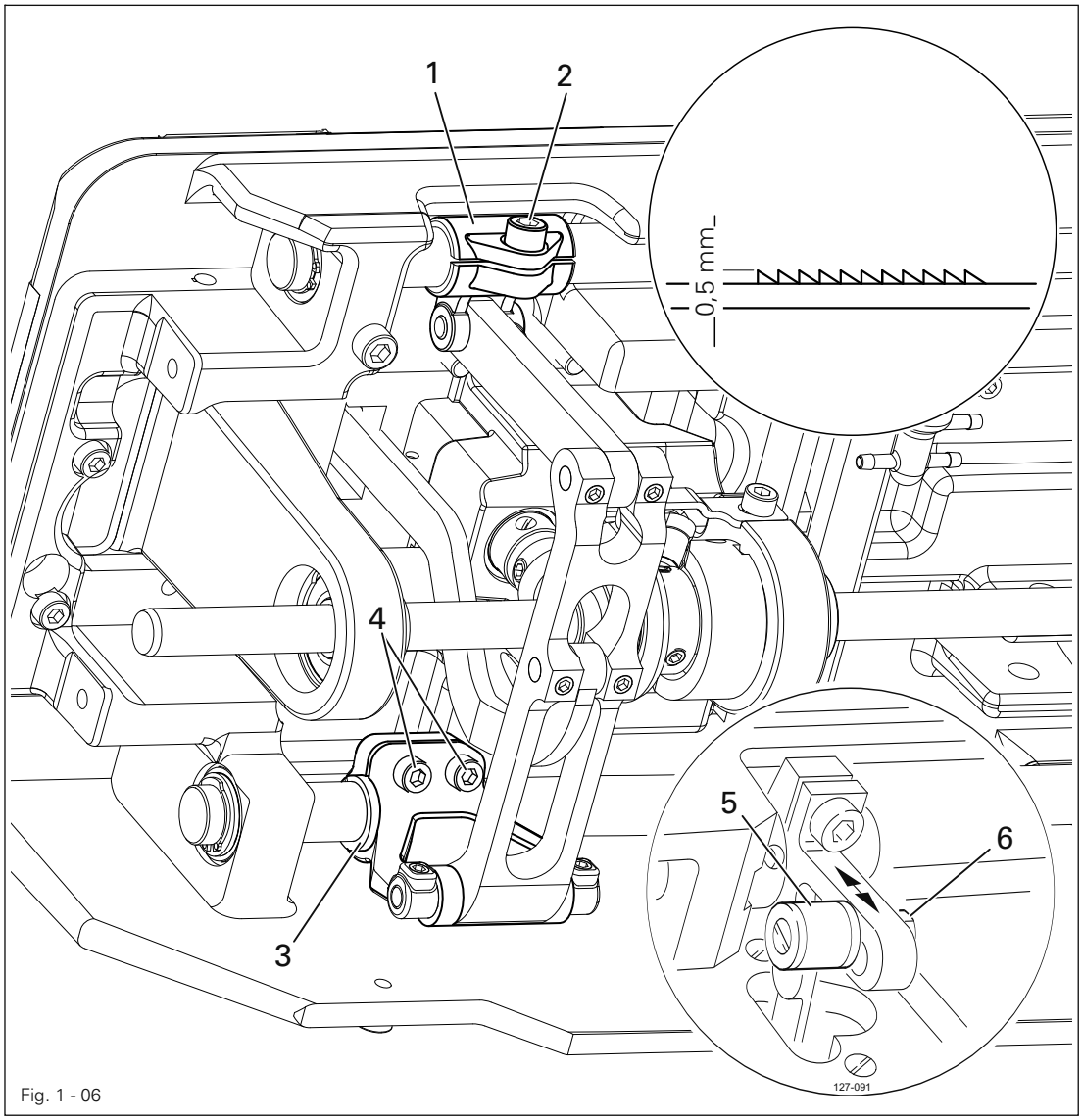

Fig. 1 - 06

- Rotate lifting crank **1** (screws **2**) and excenter sleeve **3** (screws **4**) in accordance with **rule 1**. Align the transporter in the needle plate recess at the same time in accordance with **rule 2**.

The height of the bottom feed dog can also be increased or reduced as required by moving crank **5** (nut **6**) up or down.

1.05.07 Feeding stroke difference

Requirement
With the maximum stitch length set, when the balance wheel is turned the feeding strokes of the needle and the bottom feed dog should be the same.

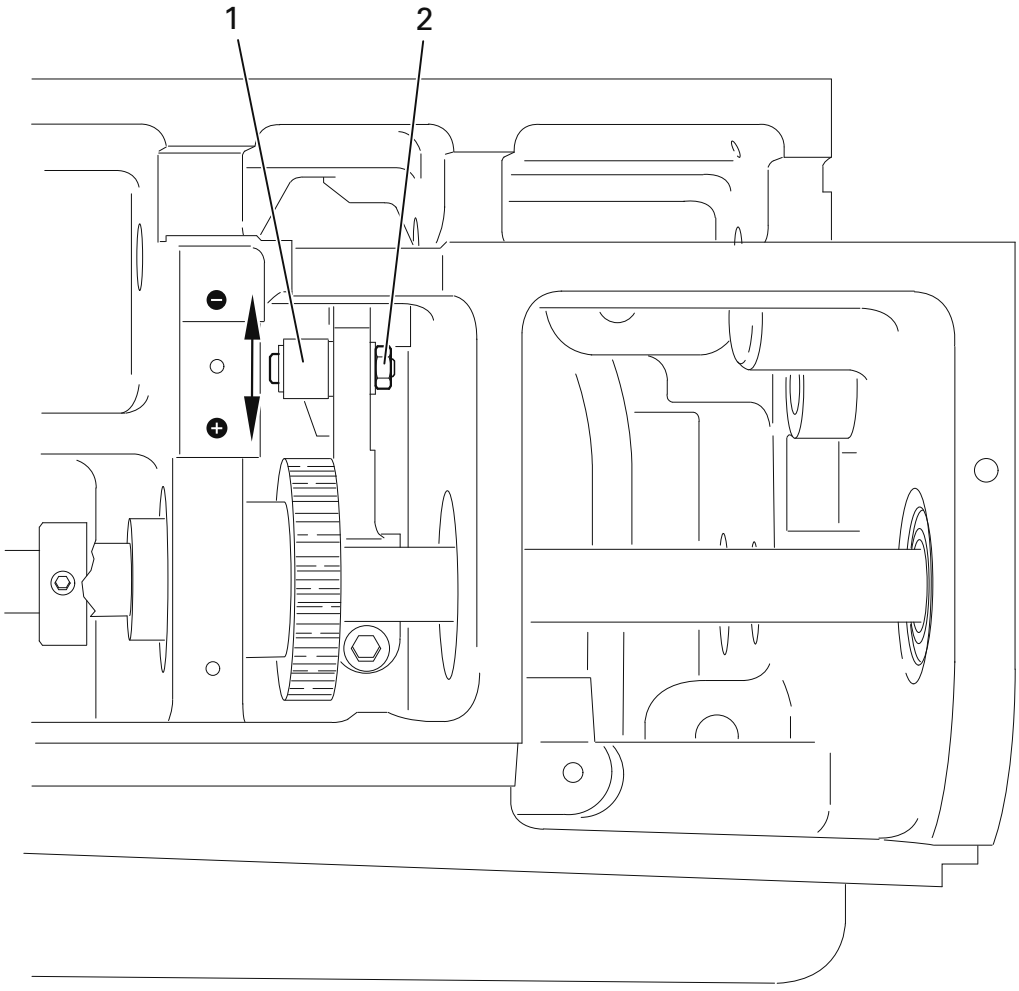

Fig. 1 - 07

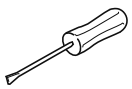

- With connecting rod **1** (nut **2**) increase ("**+**") or reduce (-) the needle feed stroke in accordance with the **requirement**.

1.05.08 Top feed stroke

Requirement
With adjustment wheel **1** set at "**5**", the top feed dog **7** and presser foot **4** should each rise by **5.0 mm**.

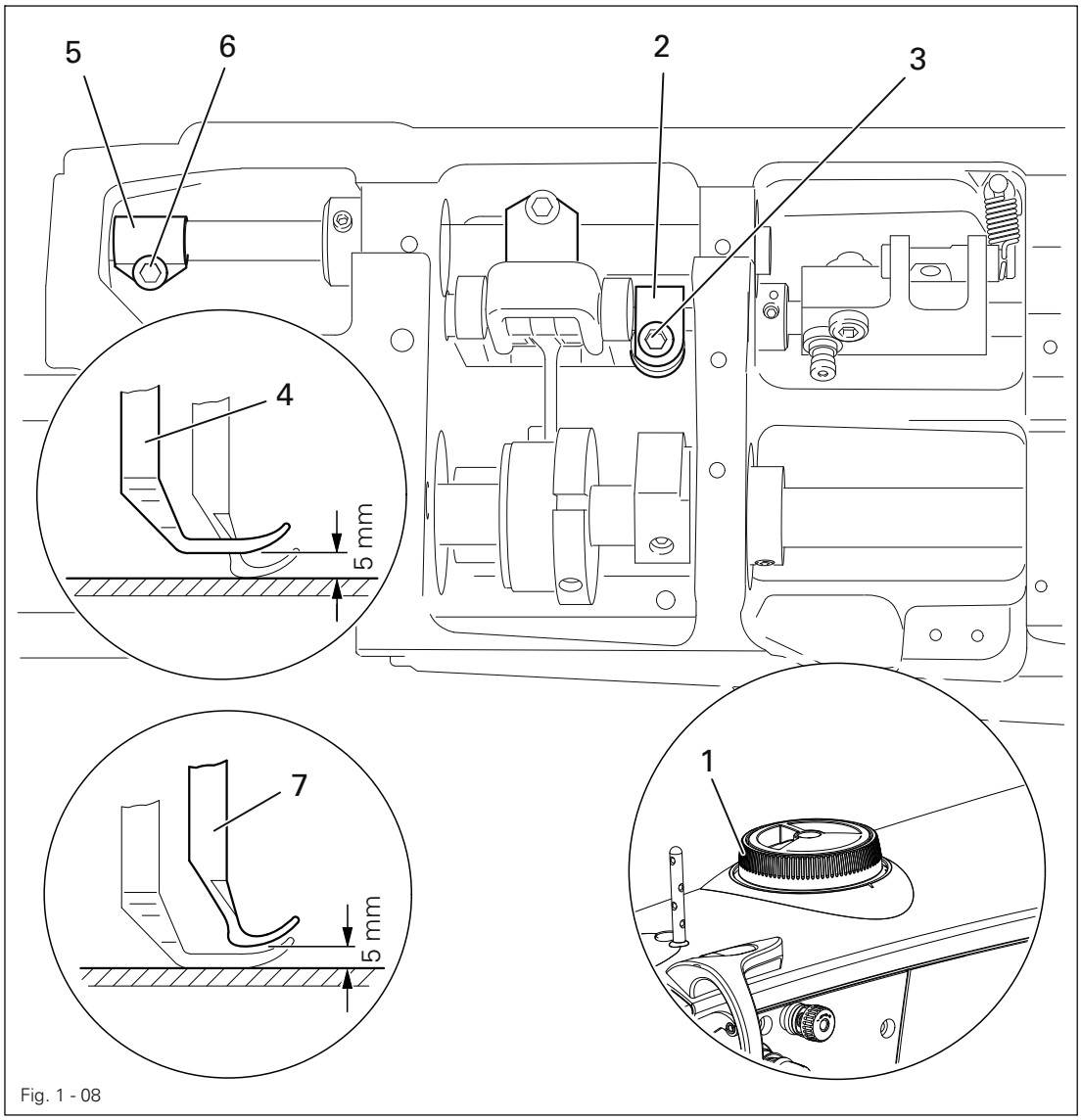

Fig. 1 - 08

- Remove the bottom feed dog and set adjustment wheel **1** at "**5**".
- Loosen the screws of the needle plate, place the metal gauge over the opening of the needle plate slot so that both sewing feet can be lowered onto the metal gauge.
- For the preliminary adjustment, adjust crank **2** (screw **3**) so that there is a clearance of **5 mm** between presser foot **4** and the needle plate.
- Adjust crank **5** (screw **6**) so that top feed dog **7** and presser foot **4** have the same stroke.
- Check the adjustment in accordance with the **requirement**, and correct if necessary.

1.05.09 Top-feed lifting motion

Requirement
The top feed dog should just have reached the needle plate when the presser foot lift is set at **5 mm** and the needle descending from above is **2 mm** above the needle plate.

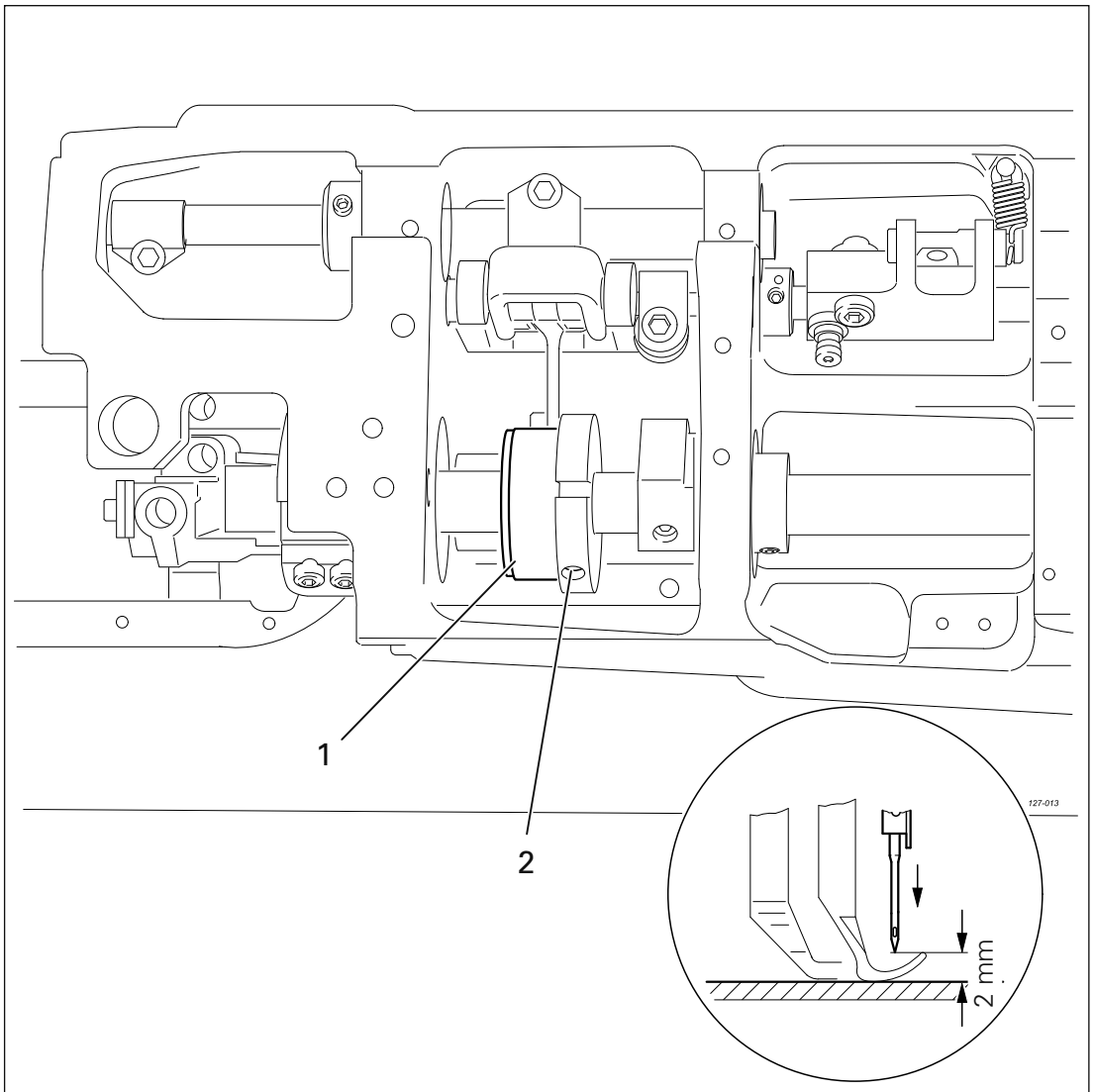

Fig. 1 - 09

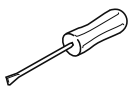

- Turn eccentric **1** (screw **2**) in accordance with the **requirement**.

1.05.10 Preliminary adjustment of the needle height

Requirement
When the needle bar is positioned at t.d.c. (balance wheel position **0°**), the clearance between the needle point and the needle plate should be **22 mm**.

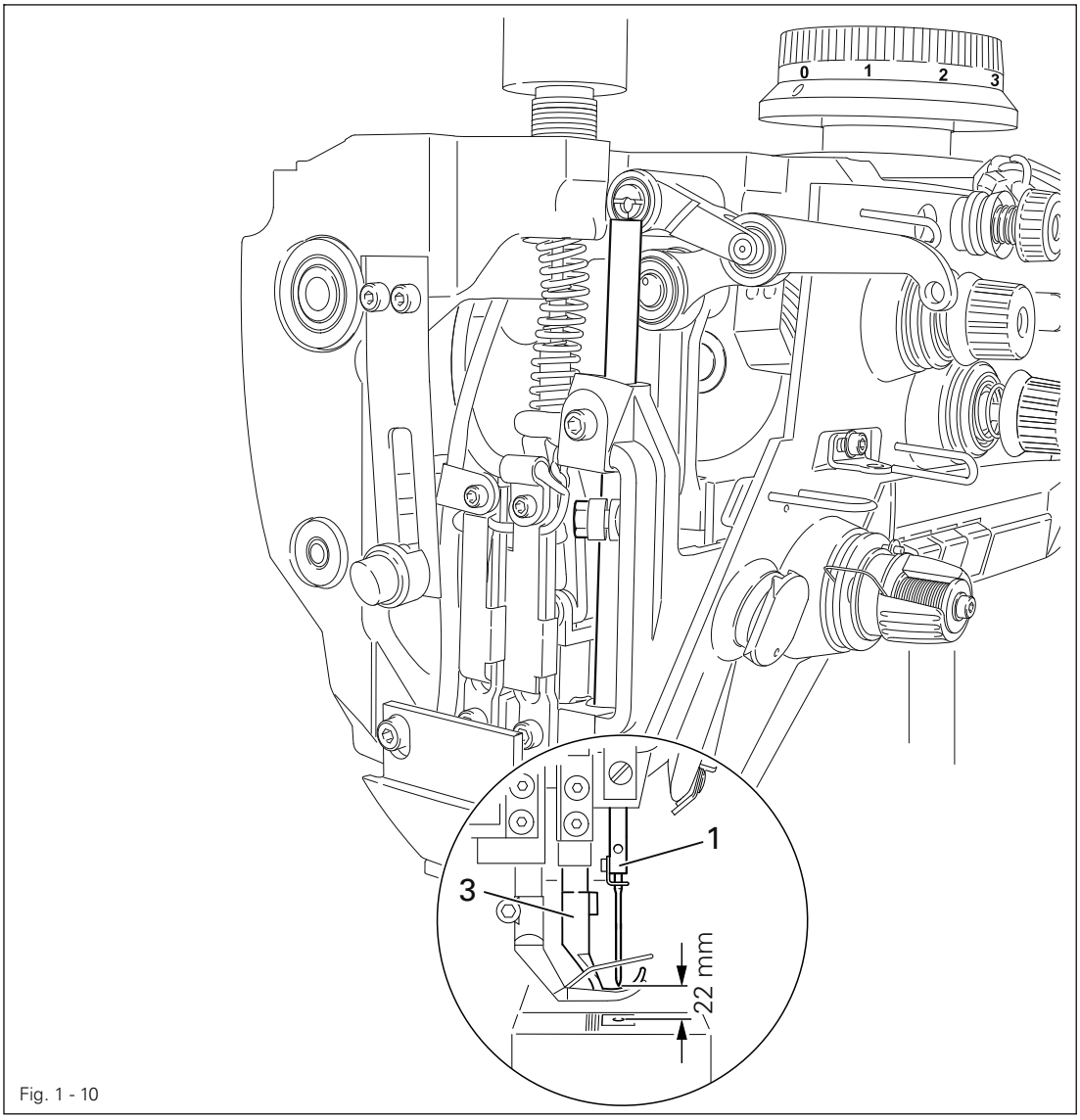

Fig. 1 - 10

- Without turning it, re-position needle bar **1** (screw **2**) in accordance with the **requirement**.

Make sure that needle bar **1** and foot **3** do not collide.

1.05.11 Needle rise, hook clearance, needle height and needle guard

Requirement

With the stitch length set at "**4.5**" and in the needle rise position (see table)

1. The hook point **9** should be positioned at "needle centre" with a hook-to-needle clearance of **0.05 – 0.10 mm**.
2. The top of the needle eye should be positioned **0.8 mm** below hook point **9** and
3. needle guard **7** must touch the needle just lightly.

Needle rise position

Model **C**: Balance wheel position **202° / 2.0 mm**

Model **D**: Balance wheel position **204° / 2.4 mm**

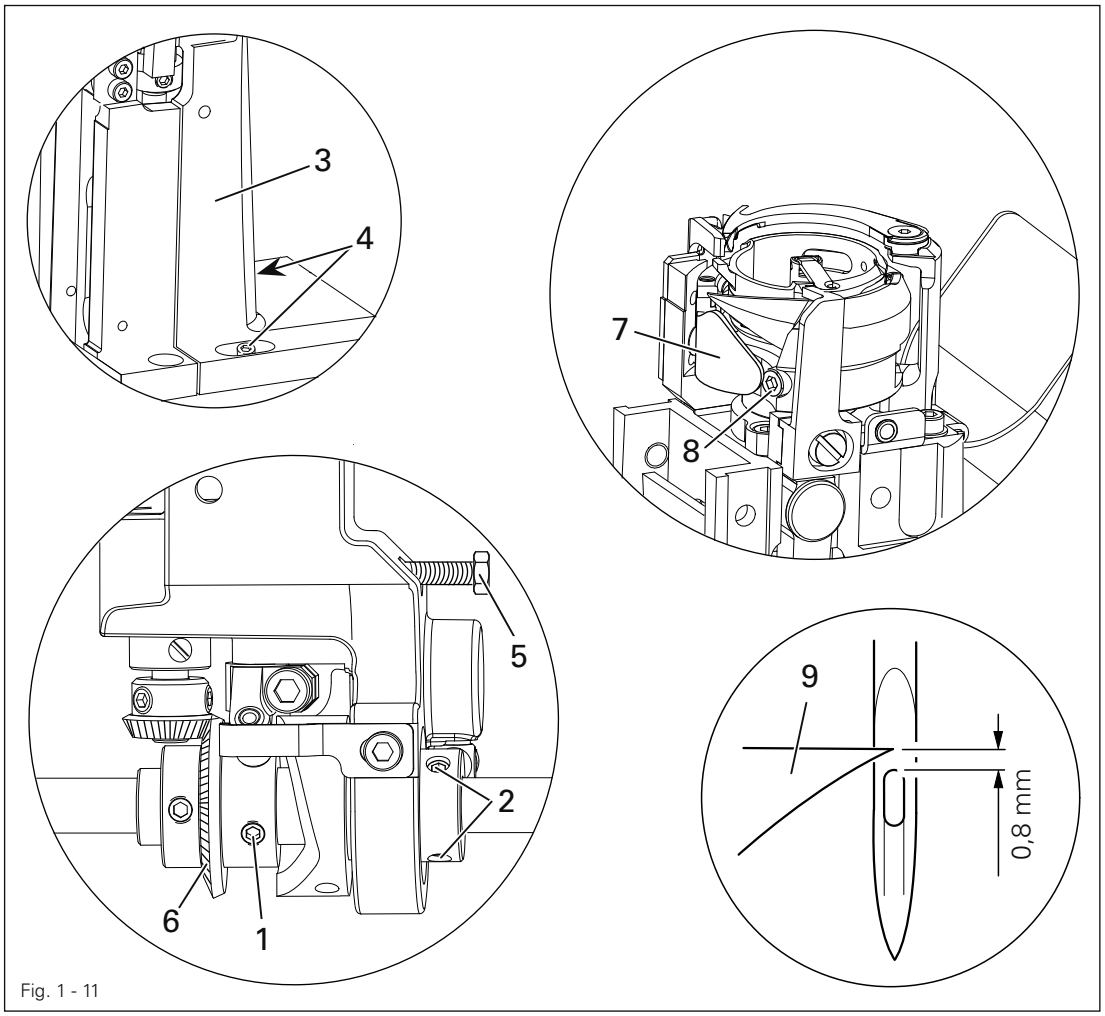

Fig. 1 - 11

- Loosen screws **1** and **2**.
- Move column **3** (screws **4**) by turning the threaded bolts **5** in accordance with **rule 1**.
- Turn cogwheel **6** in accordance with **rule 1** and tighten screws **1**.
- Move the needle bar without turning in accordance with **rule 2**; see also **Chapter 1.05.10 Pre-calibrating the needle bar**.
- Adjust needle guard **7** (screw **8**) according to **rule 3**.

1.05.12 Bobbin lift travel

Requirement

When turning the handwheel,

1. the bobbin lift **3** should stand in its left turning point when in handwheel position "**10**°".
2. the horn **5** should be lifted by the thread thickness from stitch platen **6** on the right turning point of the bobbin lift **3**.

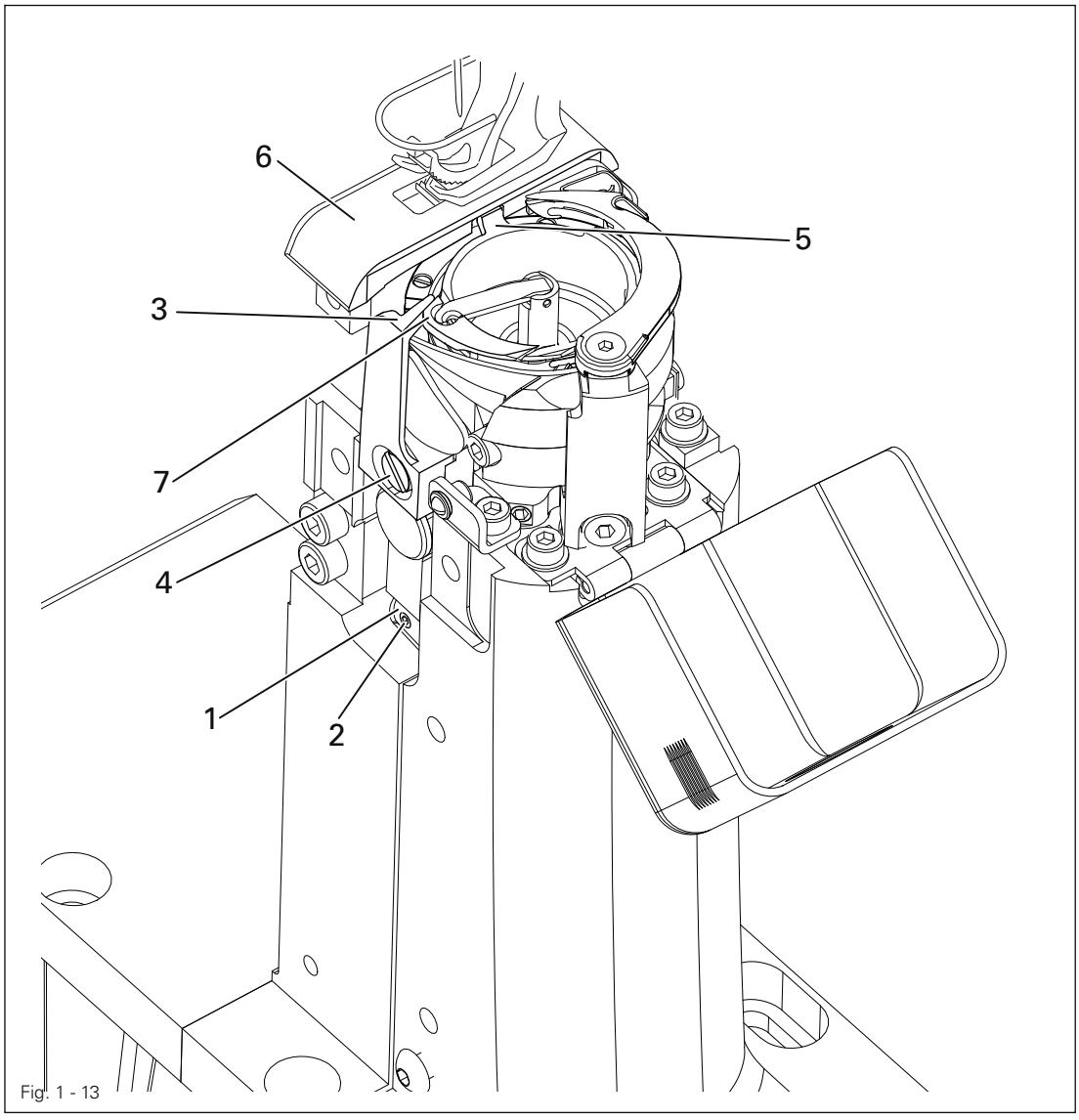

Fig. 1 - 13

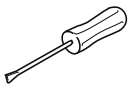

- Turn excenter **1** (screw **2**) according to rule **1**.
- Move bobbin lift **3** (screw **4**) in accordance with the **rule 2**.

The thread must pass freely between bobbin lift **3** and bobbin case **7**.

1.05.13 Adjusting the shortened trim stitch

Requirement
For the trim stitch the machine should carry out a stitch length of **0.5 – 1.0 mm**.

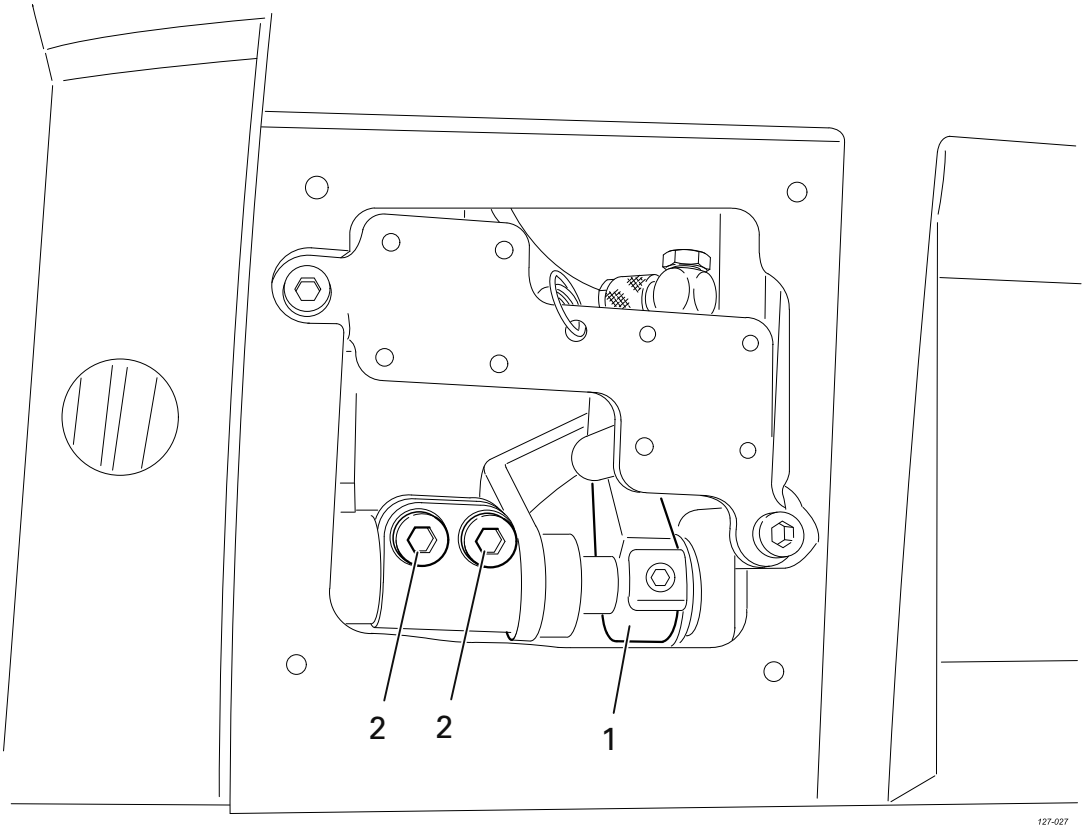

Fig. 1 - 14

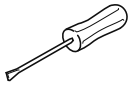

- Adjust lever **1** (screws **2**) in accordance with the **requirement**.

1.05.14 Bobbin winder

Requirement

1. When the bobbin winder is engaged, the winding spindle must be driven reliably. When it is disengaged, friction wheel **3** should not be touching drive wheel **1**.
2. When it is switched off, the bobbin winder must click securely into its end position (knife raised).

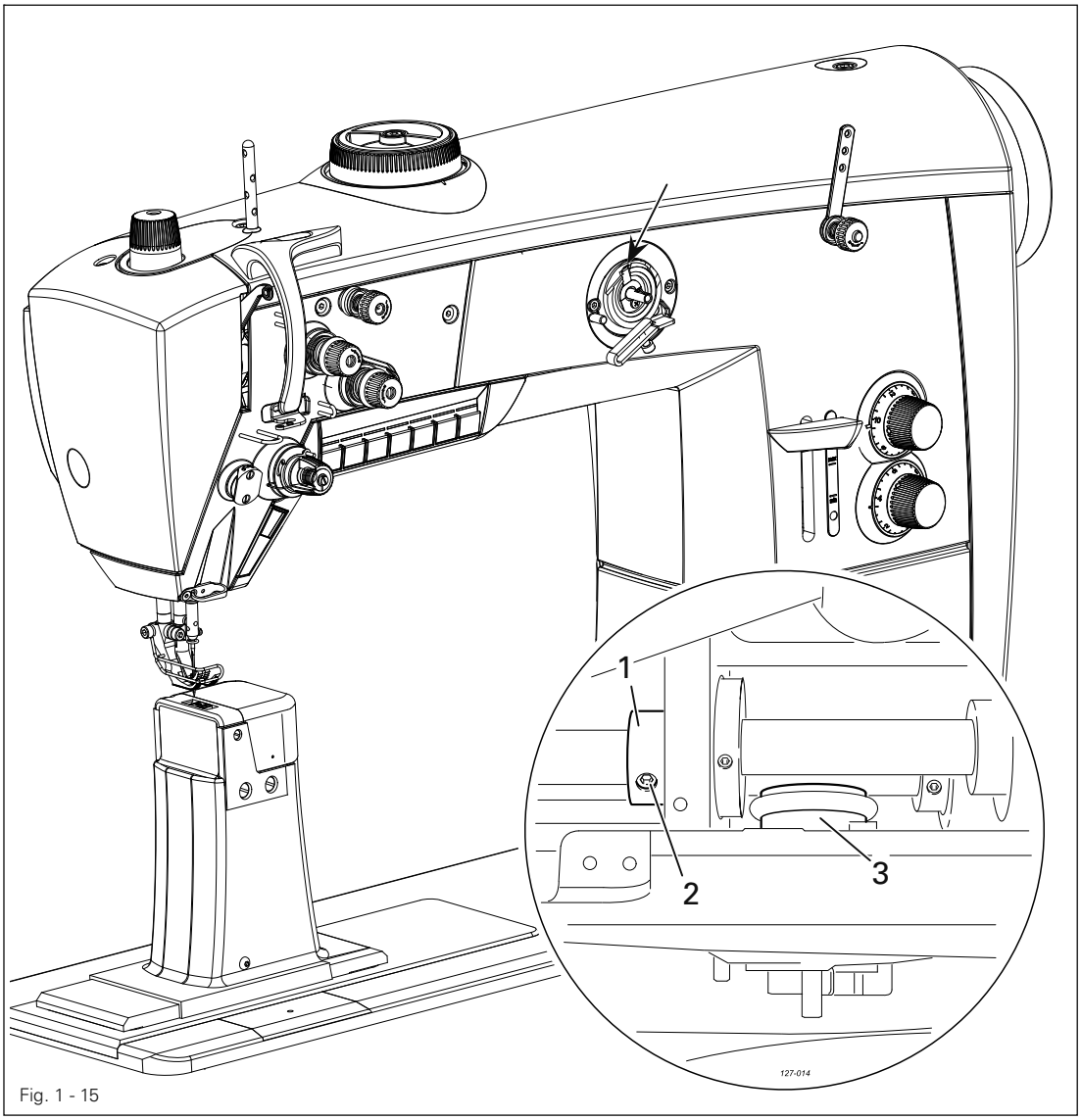

Fig. 1 - 15

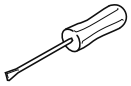

- Adjust drive wheel **1** (screw **2**) in accordance with the **requirement**.

1.05.15 Thread check spring and thread regulator

Requirement

1. The movement of thread regulator **3** must be completed when the needle point enters the material.
2. When the thread loop is at its largest while being passed around the hook, the check thread spring **3** should rise slightly from the rest **1**.

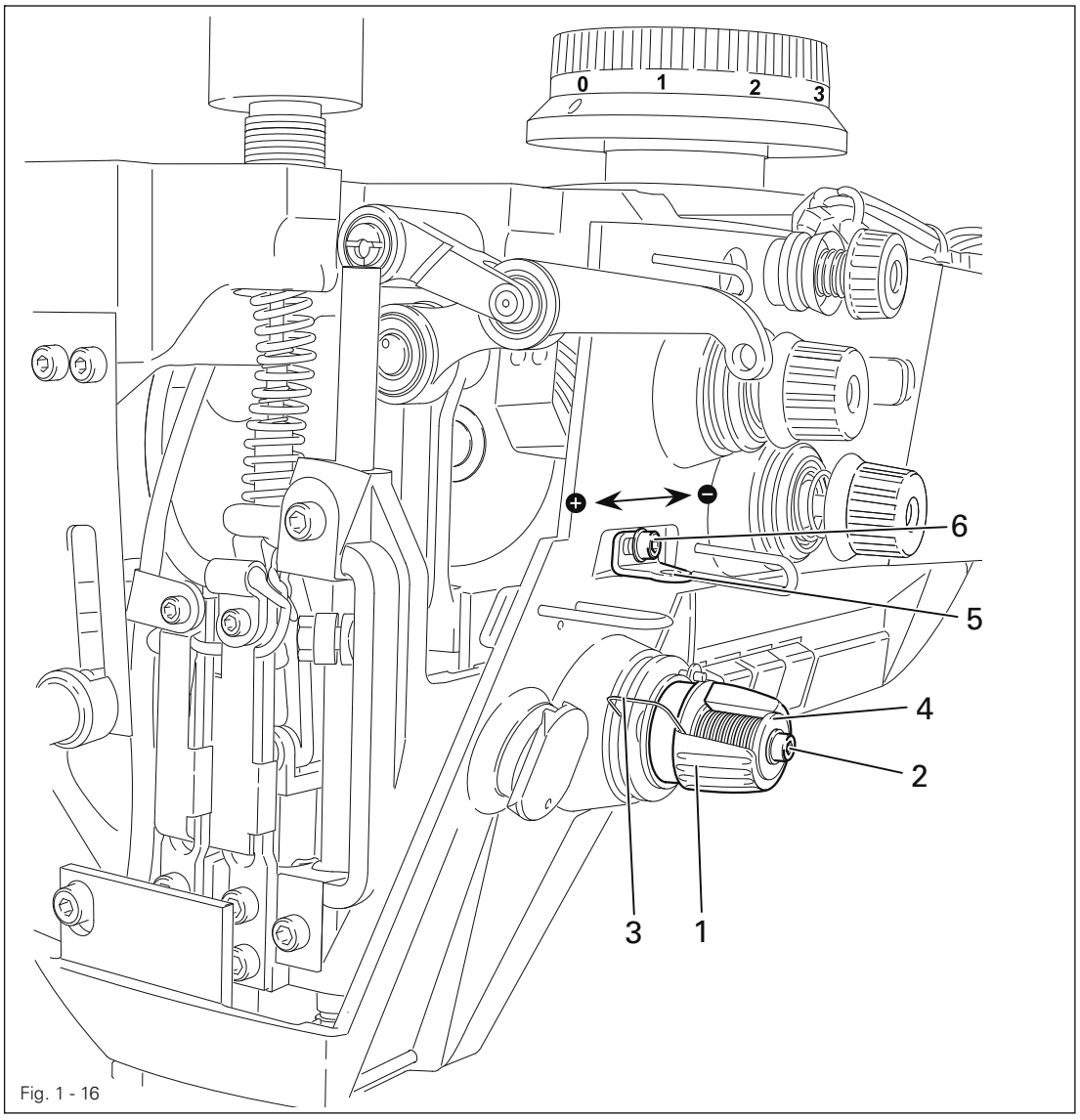

Fig. 1 - 16

- Position rest **1** (screw **2**) in accordance with **requirement 1**.
- Turn sleeve **4** (screw **2**) to adjust the tension of thread check spring **3**.
- Position thread regulator **5** (screw **6**) in accordance with **requirement 2**.

For technical reasons it may be necessary to deviate from the indicated spring stroke or spring tension.
Move thread regulator **5** (screw **6**) towards ("+") (= more thread) or ("-") (= less thread).

1.05.16 Sewing foot pressure

Requirement
The material should be fed properly even at maximum speed and with the smallest stroke.

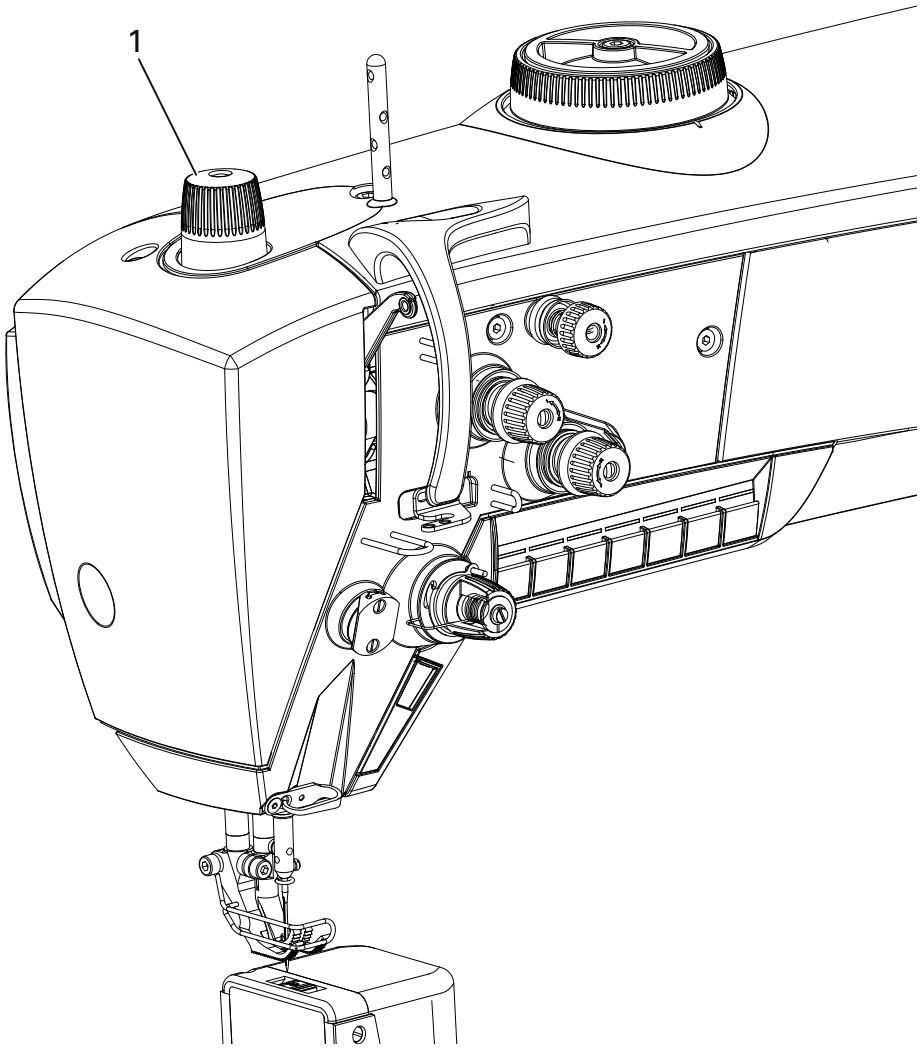

Fig. 1 - 17

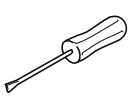

- Turn adjustment wheel **1** in accordance with the **requirement**.

1.05.17 Lubrication

Requirement
After a running time of **10** seconds a thin film of oil should be visible on paper strip **1** when this is held over the hook.

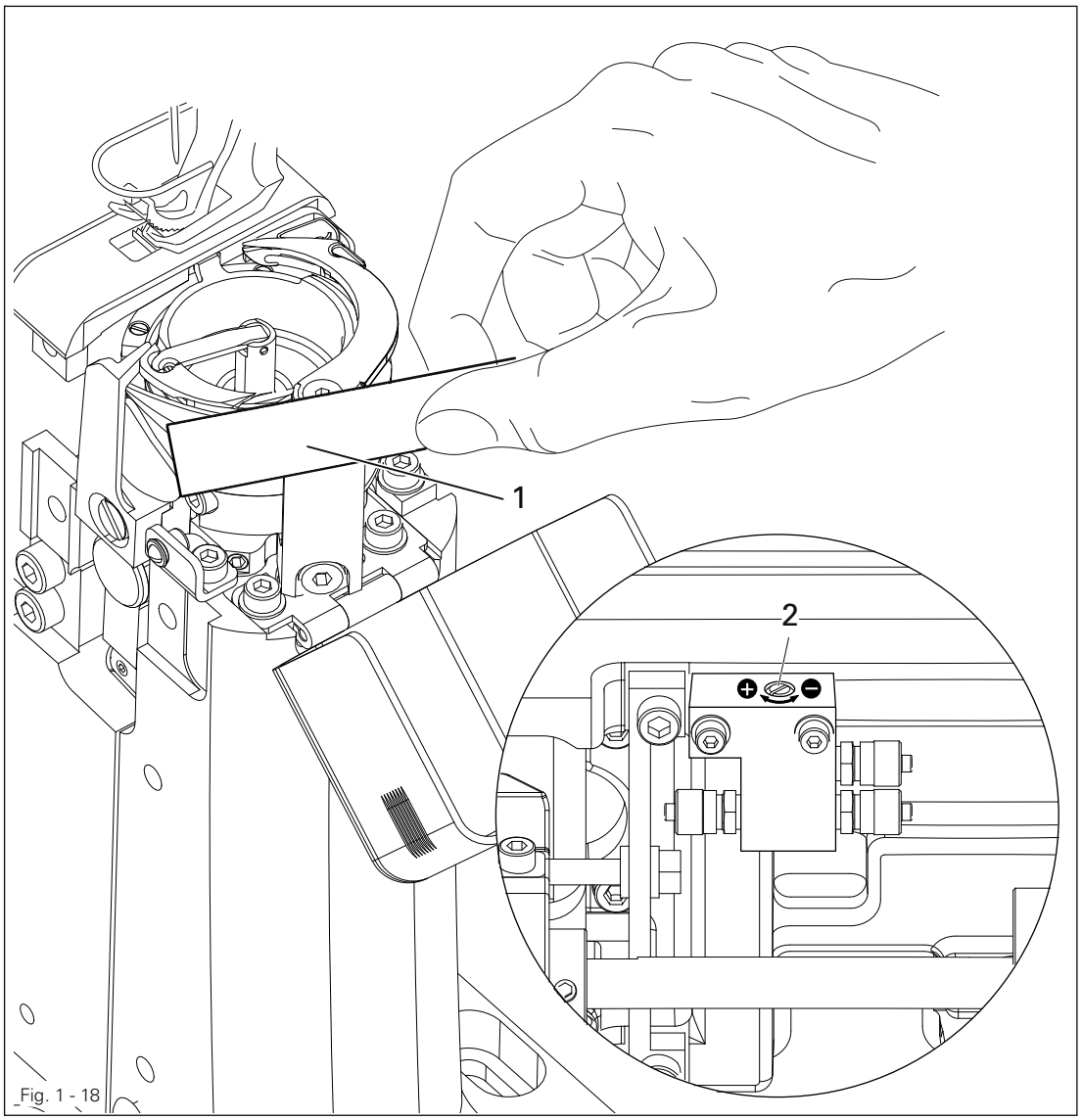

Fig. 1 - 18

- Check that the machine is filled with oil and that the oil lines are free of air.
- Run the machine for **2 – 3 min**.

Do not put your hands into the needle area when the machine is running!
Danger of injury from moving parts!

- With the machine running, hold paper strip **1** against the hook and check the **requirement**.
- If necessary, regulate amount of oil with screw **2**.

1.05.18 Limiting the stitch length

When exchanging the parts kit with stitch lengths differing from the as-delivered state of the machine, limit the max. stitch length using stitch adjuster **4**.

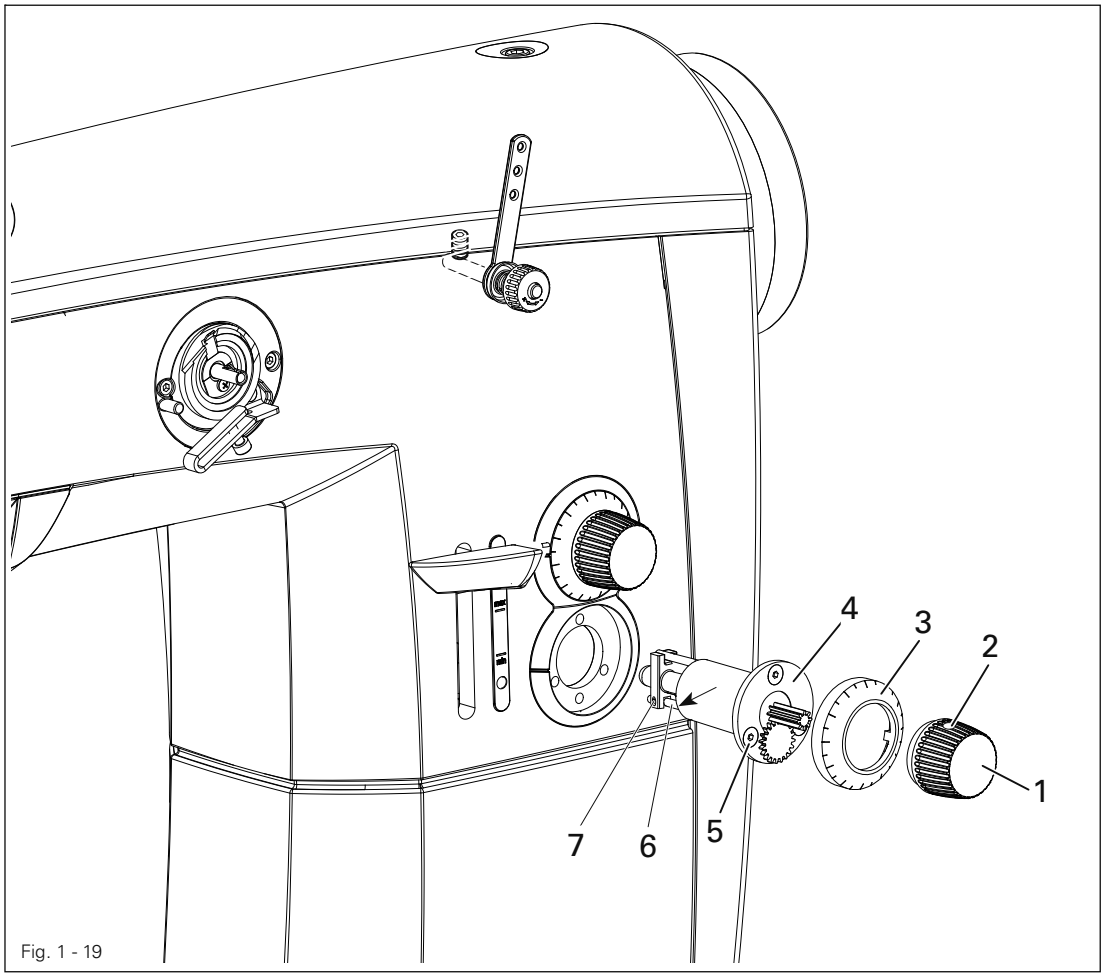

Fig. 1 - 19

- Set the desired max. stitch length at control button **1**
  (on model CN = **6** mm, on model CN**9** = **9** mm, on model DN**12** = **12** mm)
- Remove adjustment knob **1** (screws **2**) and scale dial **3**.
- Remove adjustment unit **4** (screws **5**).
- Bring lineal **6** (screw **7**) to the unit using stitch adjuster **4** (see arrow).
- Replace adjustment unit **4**, scale dial **3** and adjustment knob **1**.

1.05.19 Re-engaging the slip-clutch

Clutch **1** is adjusted at the works. In the case of a thread jamming, clutch **1** will disengage, in order to avoid damage to the hooks.
The following describes how to re-engage clutch **1**.

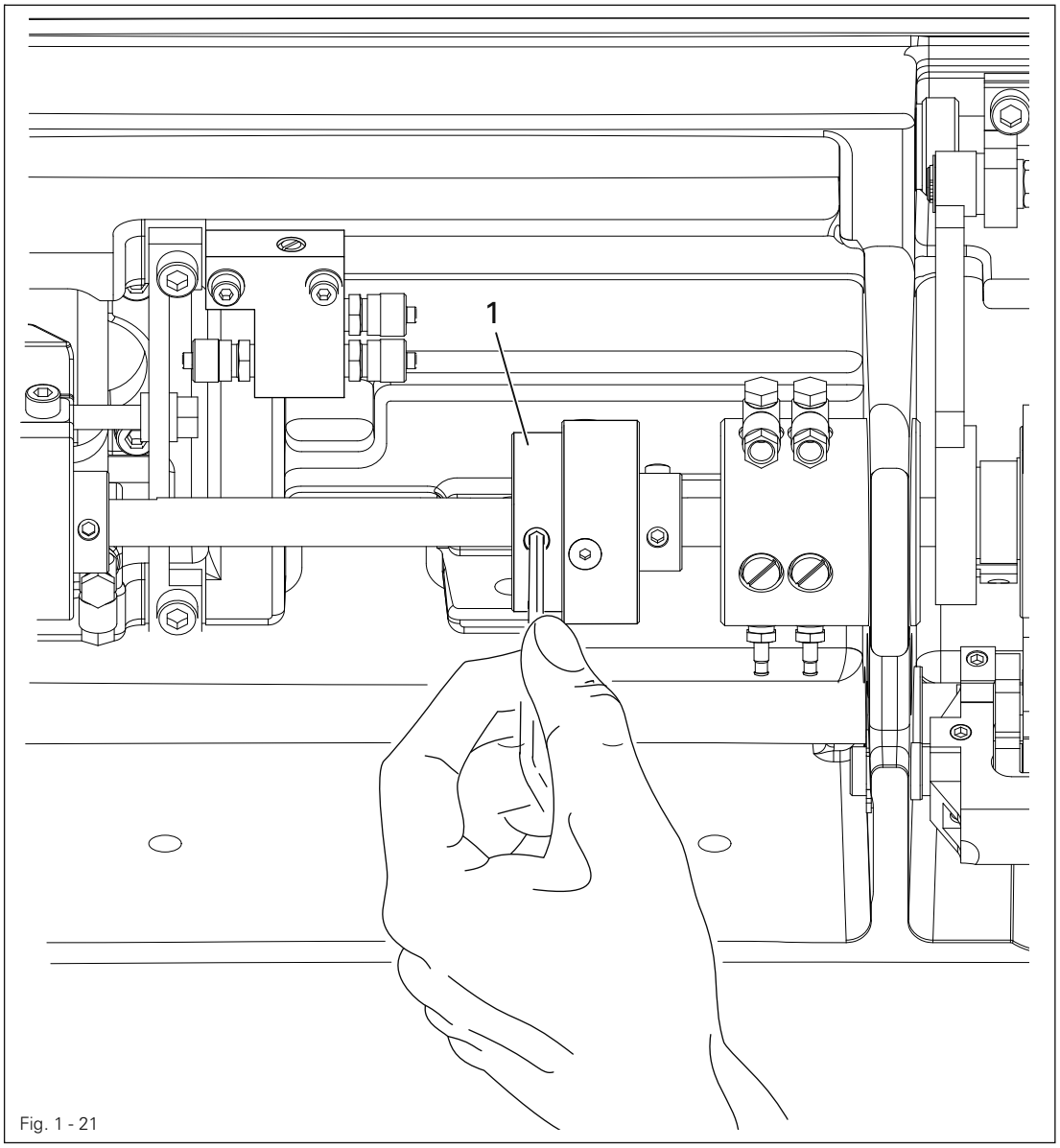

Fig. 1 - 21

- Remedy jammed thread fault.
- Hold clutch **1** firmly, as shown in Fig. **13-22**, and turn the balance wheel until clutch **1** re-engages.

1.06 Adjusting the thread trimmer -900/81

1.06.01 Resting position of roller lever/radial position of control cam

Requirement

1. When the take-up lever is at t.d.c. (balance wheel position **60** °), control cam **1** should just have moved roller lever **5** into its basic position.
2. When the thread trimmer is in its resting position, there should be a clearance of **0.1 mm** between roller lever **5** and control cam **1**.

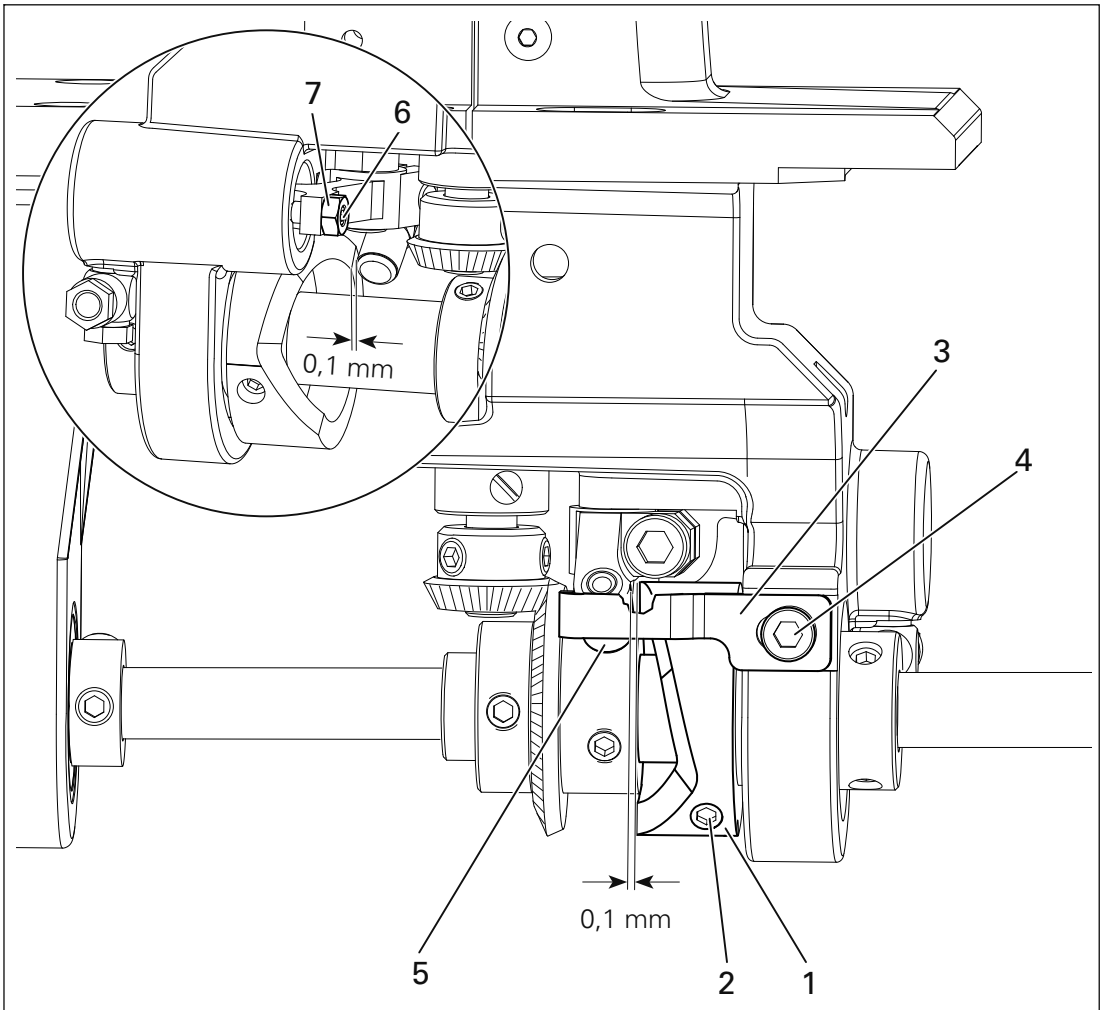

Fig. 1 - 22

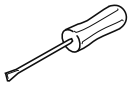

- Adjust control cam **1** (screws **2**) in accordance with **requirement 1**.

Adjustment for the right column

- Move angle **3** (screw **4**) according to **rule 2**.
- **Adjustment for the left column**
- Adjust screw **6** (nut **7**) in accordance with **requirement 2**.

1.06.02 Position and height of the thread catcher

Regel

1. When the needle bar is positioned at b.d.c. (balance wheel position **180**°) the edges of thread catcher **3** and knife **7** should be flush (see arrow).
2. Upper edge thread catcher **3** and upper edge knife **7** must be level.

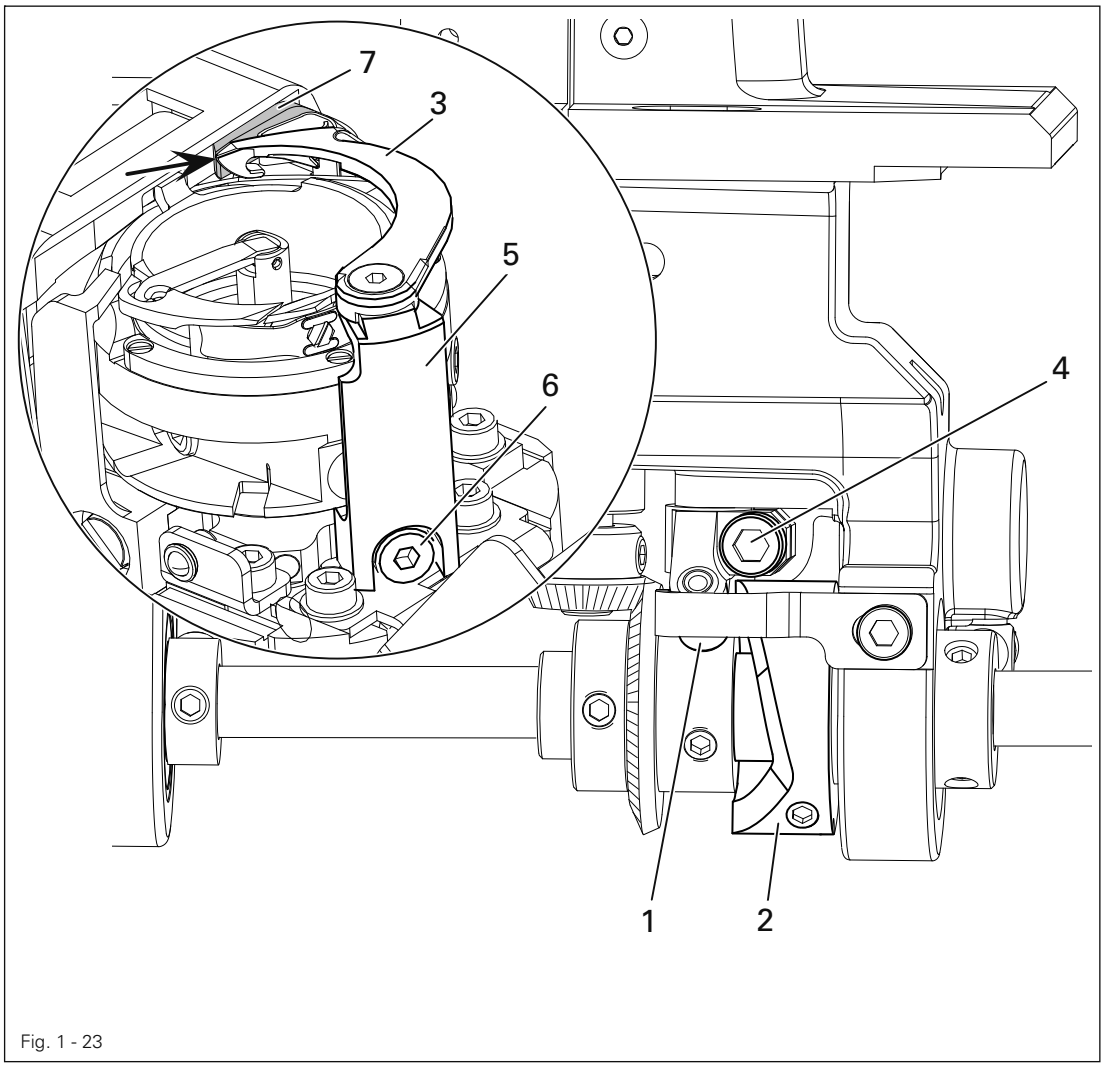

Fig. 1 - 23

- Press roller lever **1** against control cam **2**.
- Adjust thread catcher **3** (screw **4**) in accordance with the **requirement 1**.
- Move carrier **5** (screw **6**) in accordance with **rule 2**. Ensure that thread catcher **3** does not touch either stitch platen or gripper on its entire travel.

1.06.03 Knife pressure

Requirement
When the front edge of thread catcher **3** is **3 – 4 mm** in front of the knife blade, the knife **4** should be touching the catcher edge with slight pressure.

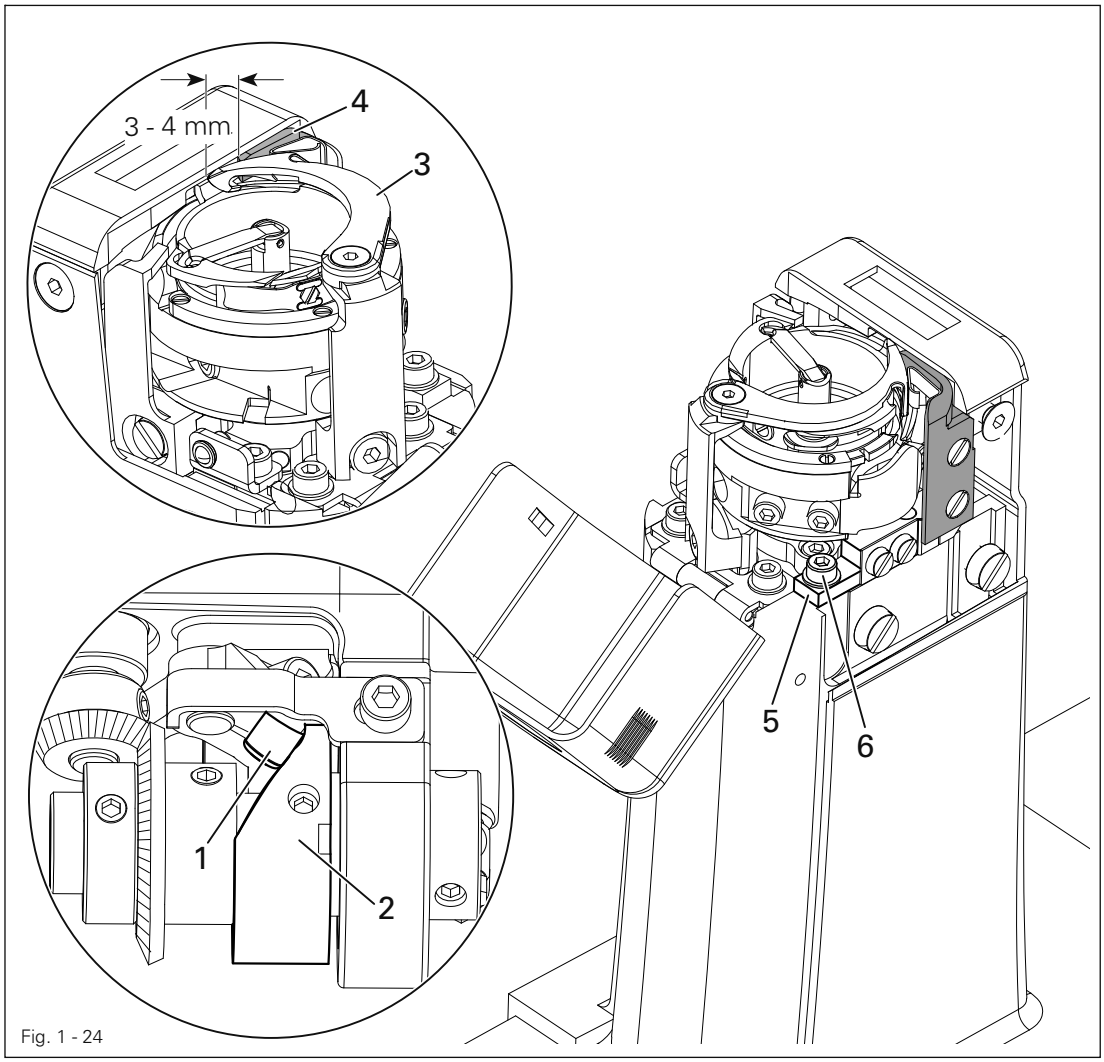

Fig. 1 - 24

- Bring the take-up lever to its b.d.c and press roller lever **1** into the control cam **2**.
- Turn the balance wheel until the front edge of catcher **3** is at a distance of **3 – 4 mm** from the blade of knife **4**.
- Swing knife bearing **5** (screw **6**) in accordance with the **requirement**.

After completing the adjustment, recheck the position of the thread catcher in accordance with Chapter **1.06.02 Position and height of the thread catcher**.

1.06.04 Bobbin thread clamp spring

Requirement
When the thread trimmer is in its cutting position, the clamp spring should slightly touch the thread catcher and hold the thread reliably.

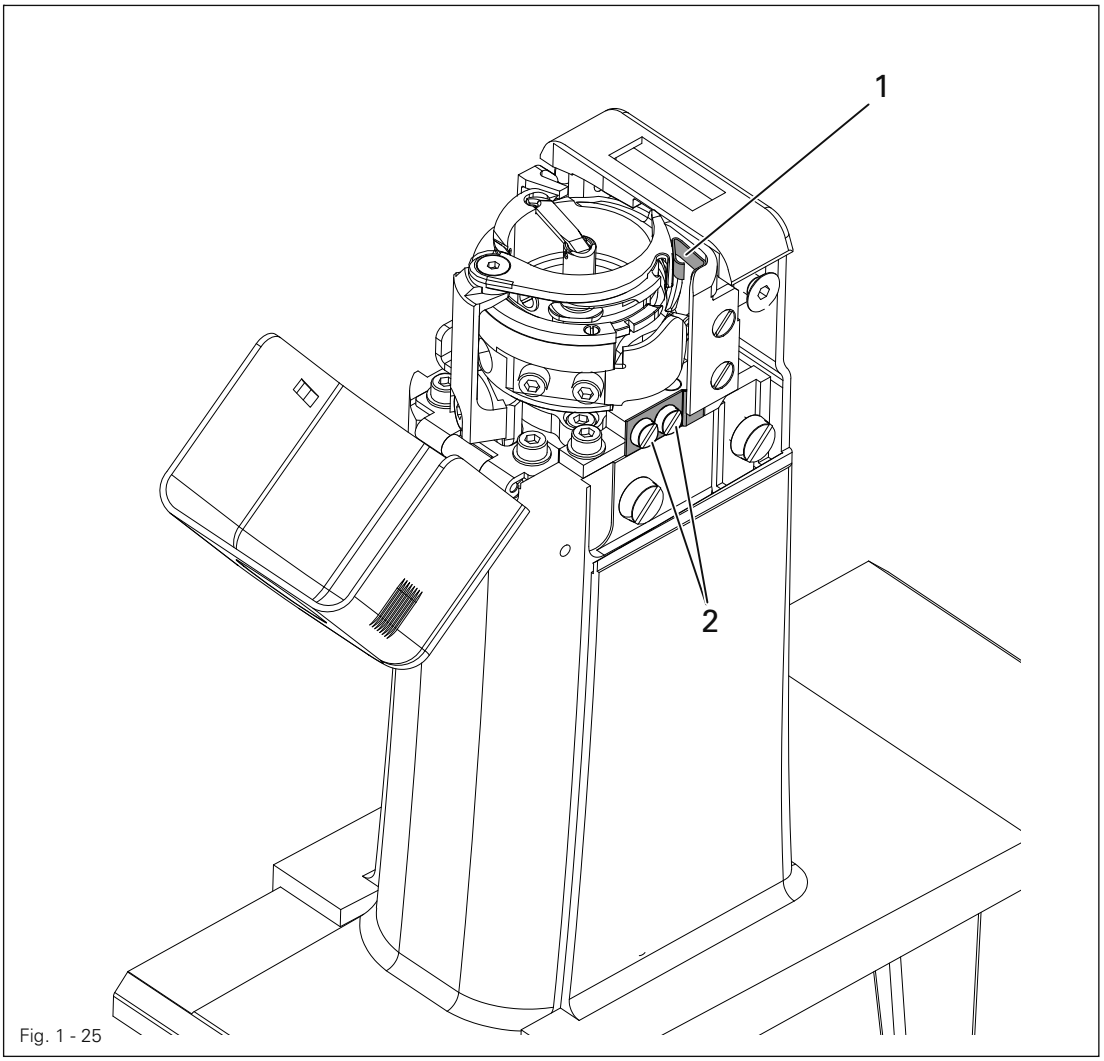

Fig. 1 - 25

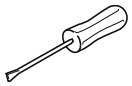

- Adjust clamp spring **1** (screw **2**) in accordance with the **requirement**.
- Carry out the cutting operation by hand and check the setting. Readjust if necessary.

1.06.05 Manual cutting test

Requirement

1. 1. When moving forward, thread catcher **1** must not move bobbin thread **3**
2. When thread catcher **1** is at its front point of reversal, bobbin thread **3** should be in the centre of the marked area (see arrow).
3. After the cutting operation has been completed, needle and bobbin thread should be cut neatly and bobbin thread **3** held.

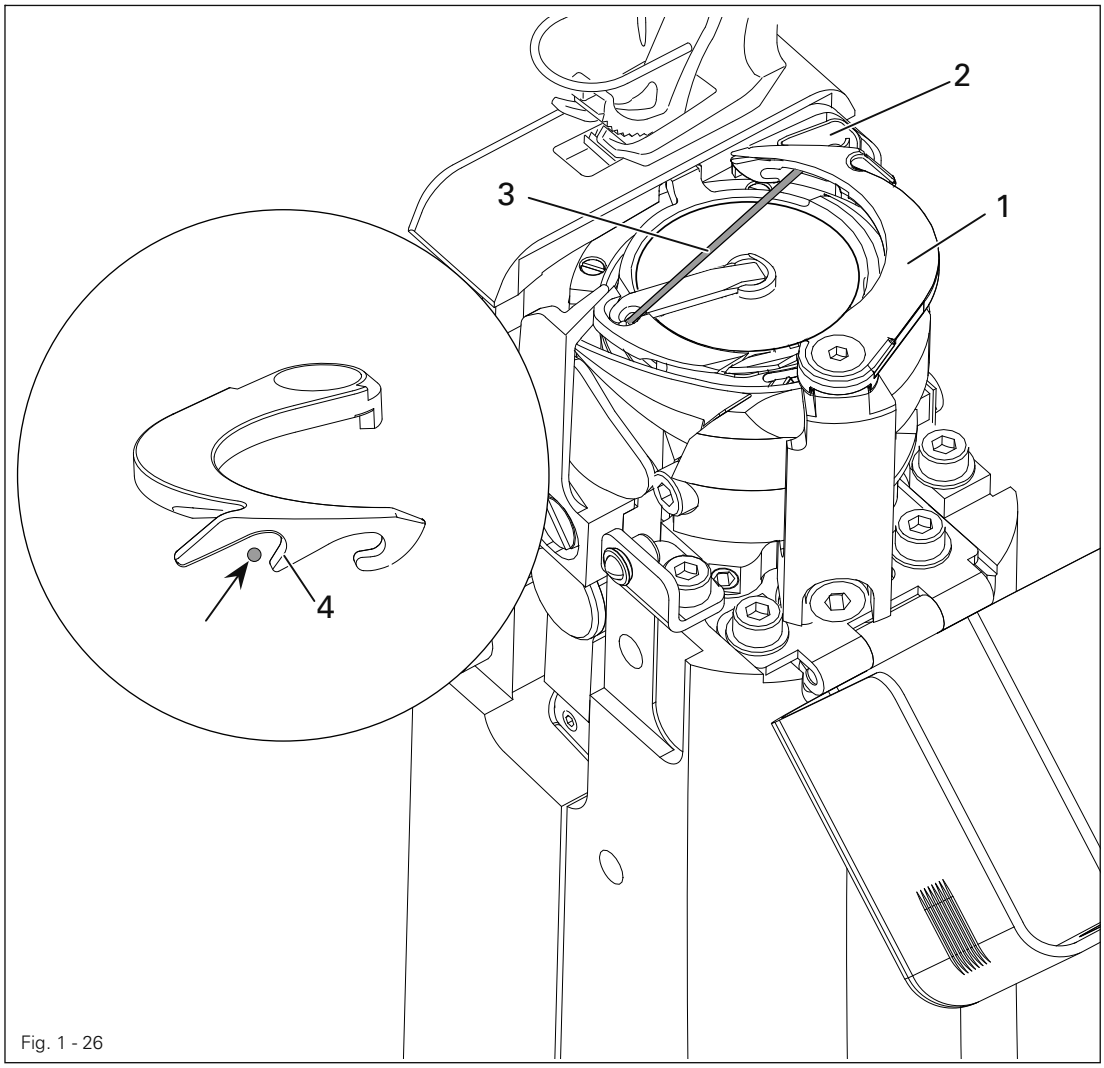

Fig. 1 - 26

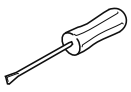

- Sew a few stitches.
- Switch off the main switch and the compressed air.
- Carry out a manual cutting test.
- Check **requirement 1**. If necessary, readjust thread catcher **1** in accordance with Chapter **1.06.02 Position and height of the thread catcher**.
- Check **requirement 3**. If necessary, readjust bobbin thread clamp spring **2** in accordance with Chapter **1.06.04 Bobbin thread clamp spring**.

1.07 Parameter list

Consult the instruction manual for the drive for a description of the parameter settings and a list of the parameters.

2 Circuit diagrams

2.01 Block diagram PFAFF 2595 2596 PLUS with control pack P74 ED-L

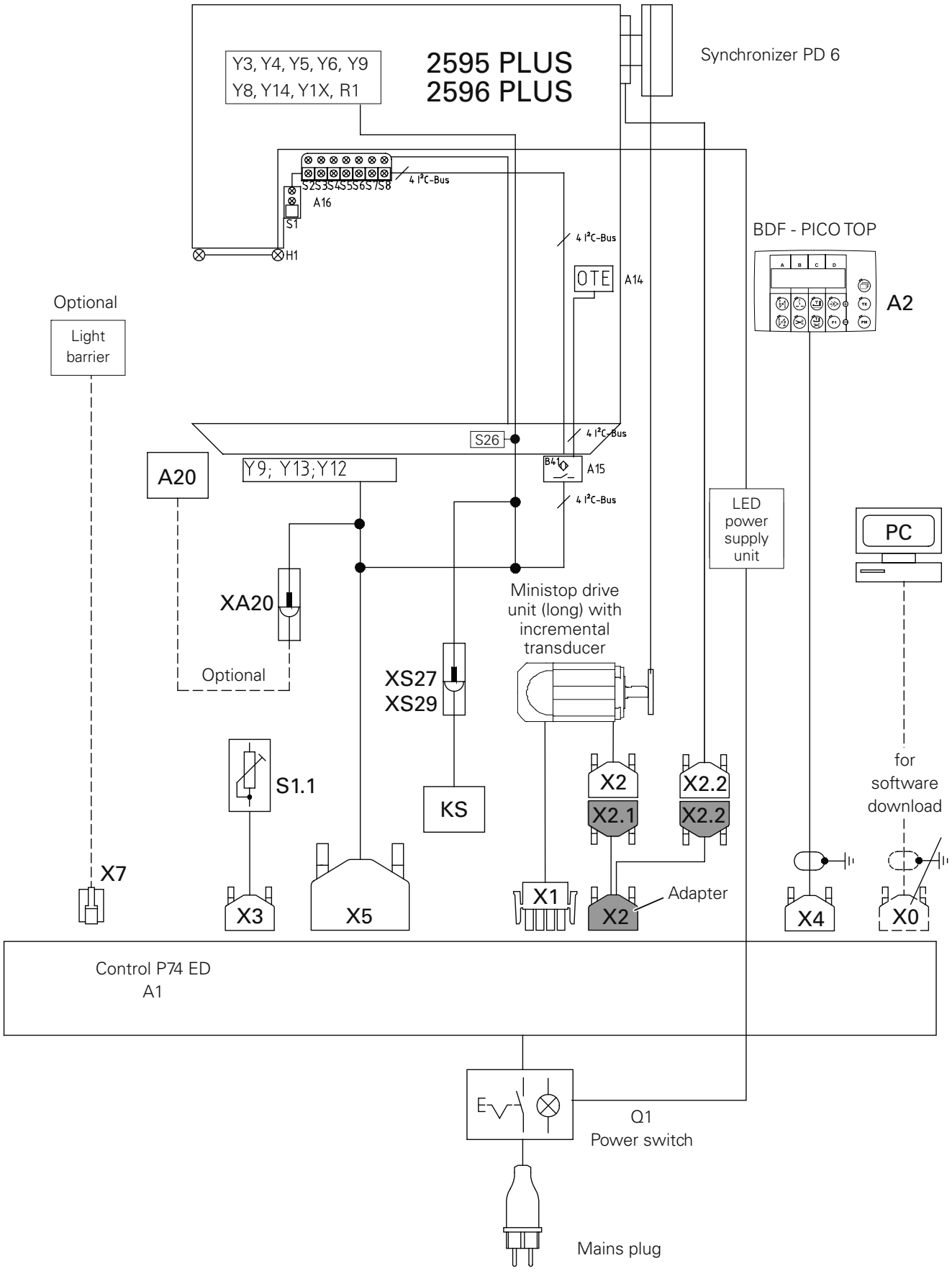

2.02 Circuit diagrams PFAFF 2595 and 2596 PLUS

Reference list for the Circuit diagrams 91-191 519-95

A1	Steuergerät P74 ED-L
A1	Controller P74 ED-L
A2	Control panel (PicoTop)
A14 (OTE)	Sewing head recognition
A15	Oil sensor (2C-Bus)
A16	Keyboard (2C-Bus)
A20/1	Bobbin thread monitor 1 (optional)
A20/2	Bobbin thread monitor 2 (optional)
B41	Oil sensor (2C-Bus)
H1	Sewing lamp
R1 speed	Potentiometer for reduced during stroke adjustment
M1	Sewing motor
Q1	Main switch
S1.1	Pedal speed control unit
S1	Key 1 depending on parameter other function
S2	Key 2 depending on parameter other function
S3	Key 3 depending on parameter other function
S4	Key 4 depending on parameter other function
S5	Key 5 depending on parameter other function
S6	Key 6 depending on parameter other function
S7	Key 7 depending on parameter other function
S8	Key 8 Emergency off
S26	Start inhibitor
S27	Stroke adjustment
S28	Speed limitation from 9mm stitch length on
S29	Centre guide
X0	RS232 interface (PC)
X1	Sewing motor
X2	Incremental transmitter
X2.1	Incremental transmitter
X2.2	Synchronizer PD 6
X3	Speed control unit
X4	PicoTop control panel
X5	Input/output plug
X7	Light barrier plug & bobbin thread monitor (optional)
XA14	A14 Sewing head recognition (OTE)
XA15.1	A15 Oil sensor (2C-Bus)
XA15.2	A15 Oil sensor (2C-Bus) > A16 Keyboard (2C-Bus)
XA20	A20 Bobbin thread monitor (optional)
XR1	R1 Potentiometer for reduced speed during stroke adjustment
XS26	Start inhibitor
XS27	Stroke control
XS28	Speed limitation from 9mm stitch length on
XS29	Centre guide
XY3	Y3 Thread clamp (-909/..)
XY4	Y4 Presser foot lift (-910/..)
XY5	Y5 Backtacking device (-911/..)
XY6	Y6 Stroke adjustment (-918/26)
XY8	Y8 Thread tension release
XY9	Y9 Thread trimmer (-900/..)
XY12	Y12 2nd stitch length quick adjustment (-918/29)
XY13	Y13 Trim stitch
XY14	Y14 Thread tension control
XY15	Y15 Hook cleaning A20 Bobbin thread monitor (-926/..)
Y3	Thread clamp (-909/..)
Y4	Presser foot lift (-910/..)
Y5	Backtacking device (-911/..)
Y6	Stroke adjustment (-918/26)
Y8	Thread tension release
Y9	-900/.. Thread trimmer
Y12	2nd stitch length (-918/29)
Y13	Trim stitch
Y14	Thread tension control
Y15	Hook cleaning A20 Bobbin thread monitor (-926/..) optional
Y16	Centre guide unit (only on the 2596)

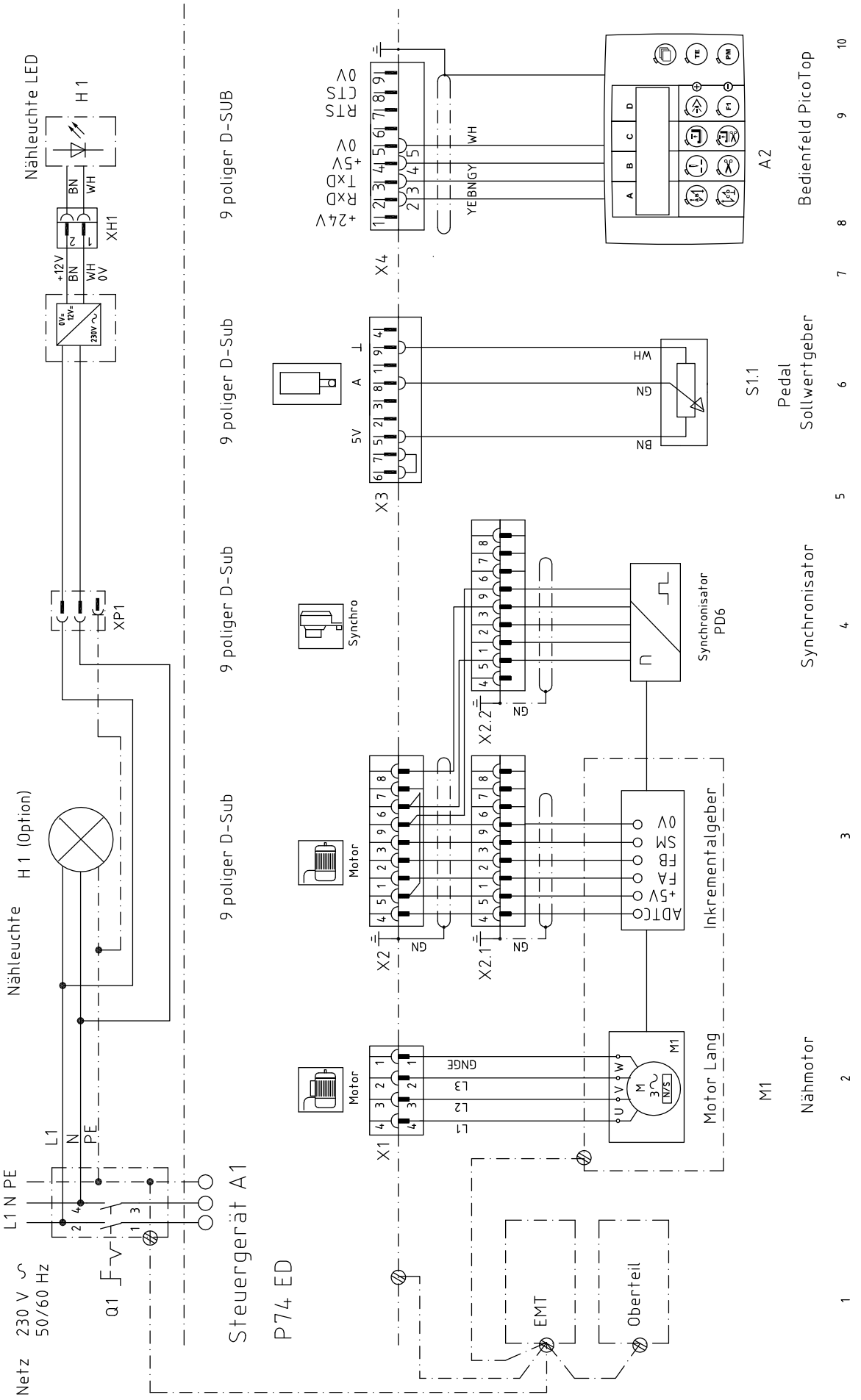
Nähleuchte LED
H 1
XH1
XP1
Nähleuchte H 1 (Option)
L1 N PE
Netz 230 V 50/60 Hz
Q1
Steuergerät A1
P74 ED
9 poliger D-SUB
9 poliger D-Sub
Synchro
Motor
X1
X2
X2.1
X2.2
X3
X4
Synchronisator PD6
Inkrementalgeber
Motor Lang
M1
Nähmotor
S1.1
Pedal Sollwertgeber
A2
Bedienfeld PicoTop
EMT
Oberteil

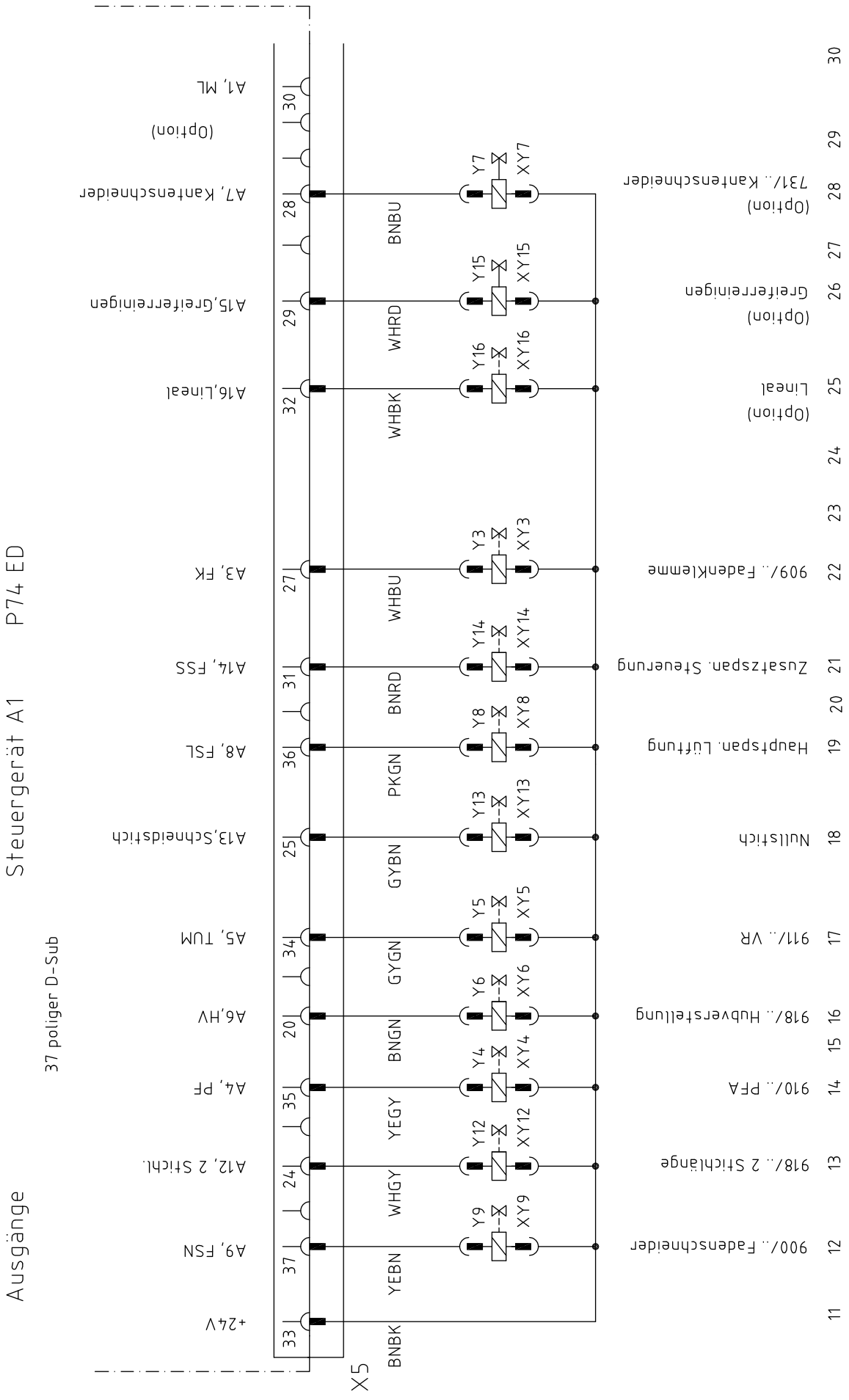
Steuergerät A1 P74 ED
Ausgänge
37 poliger D-Sub
X5
+24V
A9, FSN
A12, 2 Stichl.
A4, PF
A6,HV
A5, TUM
A13,Schneidstich
A8, FSL
A14, FSS
A3, FK
A16,Lineal
A15,Greiferreinigen
A7, Kantenschneider
(Option)
A1, ML
BNBK
YEBN
WHGY
YEGY
BNGN
GYGN
GYBN
PKGN
BNRD
WHBU
WHBK
WHRD
BNBU
900/.. Fadenschneider
912/.. 2 Stichlänge
910/.. PFA
918/.. Hubverstellung
911/.. VR
Nullstich
Hauptspan. Lüftung
Zusatzspan. Steuerung
909/.. Fadenklemme
Lineal
(Option)
Greiferreinigen
(Option)
731/.. Kantenschneider
(Option)

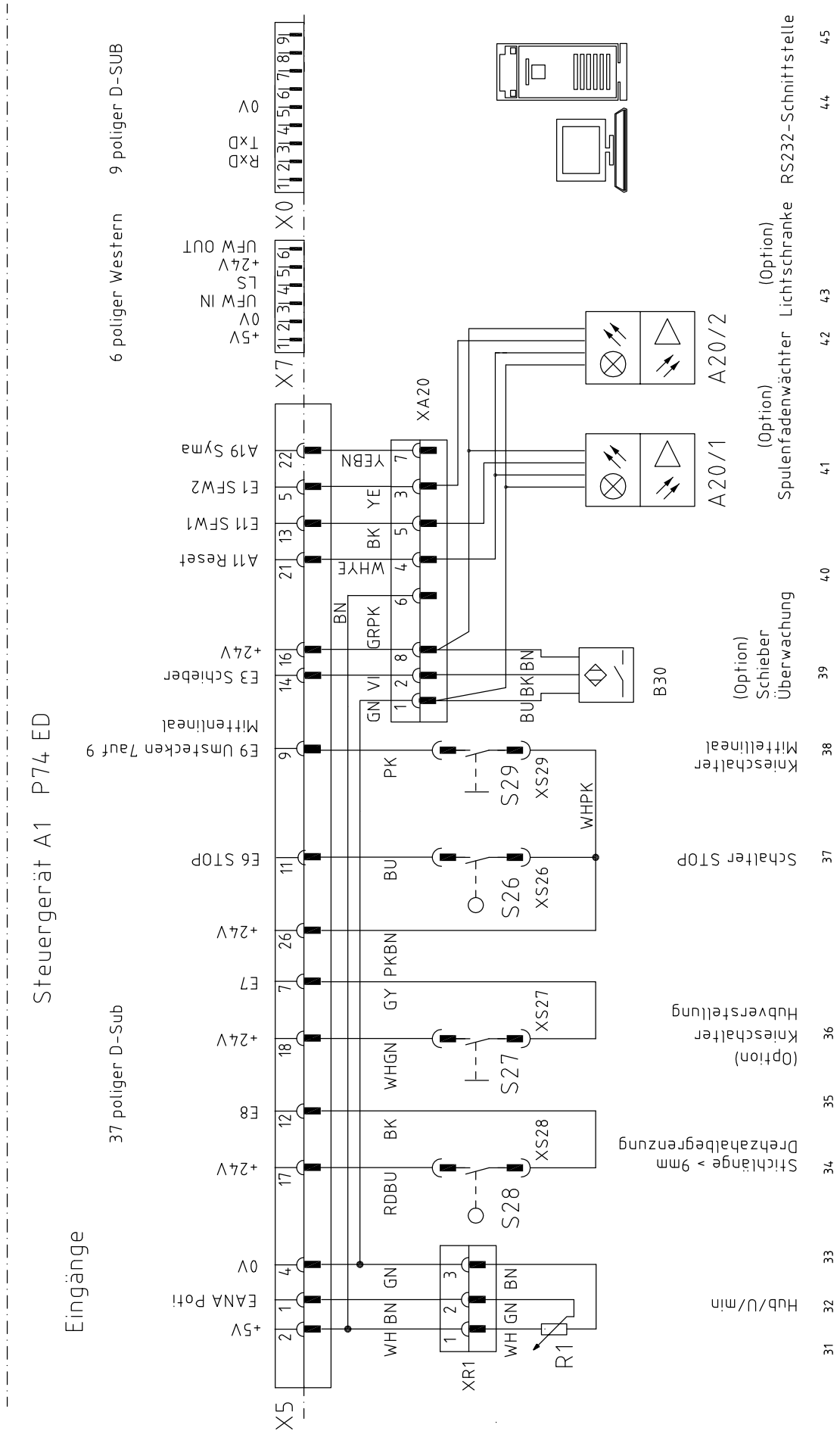
Steuergerät A1 P74 ED
Eingänge
37 poliger D-Sub
6 poliger Western
9 poliger D-SUB
X5
X7
X0
XA20
XR1
R1
S26
S27
S28
S29
XS26
XS27
XS28
XS29
A20/1
A20/2
B30
+5V
EANA Poti
0V
E8
+24V
E7
E6 STOP
E9 Umstecken 7auf 9
E3 Schieber
A11 Reset
E11 SFW1
E1 SFW2
A19 Syma
0V
CFW IN
LS
+24V
CFW OUT
RxD
TxD
0V
Hub/U/min
Stichlänge > 9mm
Drehzahlbegrenzung
(Option)
Kniescha1ter
Hubverstellung
Schalter STOP
Kniesch1alter
Mitte11inea1
(Option)
Schieber
Überwachung
(Option)
Spulenfadenwächter
(Option)
Lichtschranke
RS232-Schnittstelle

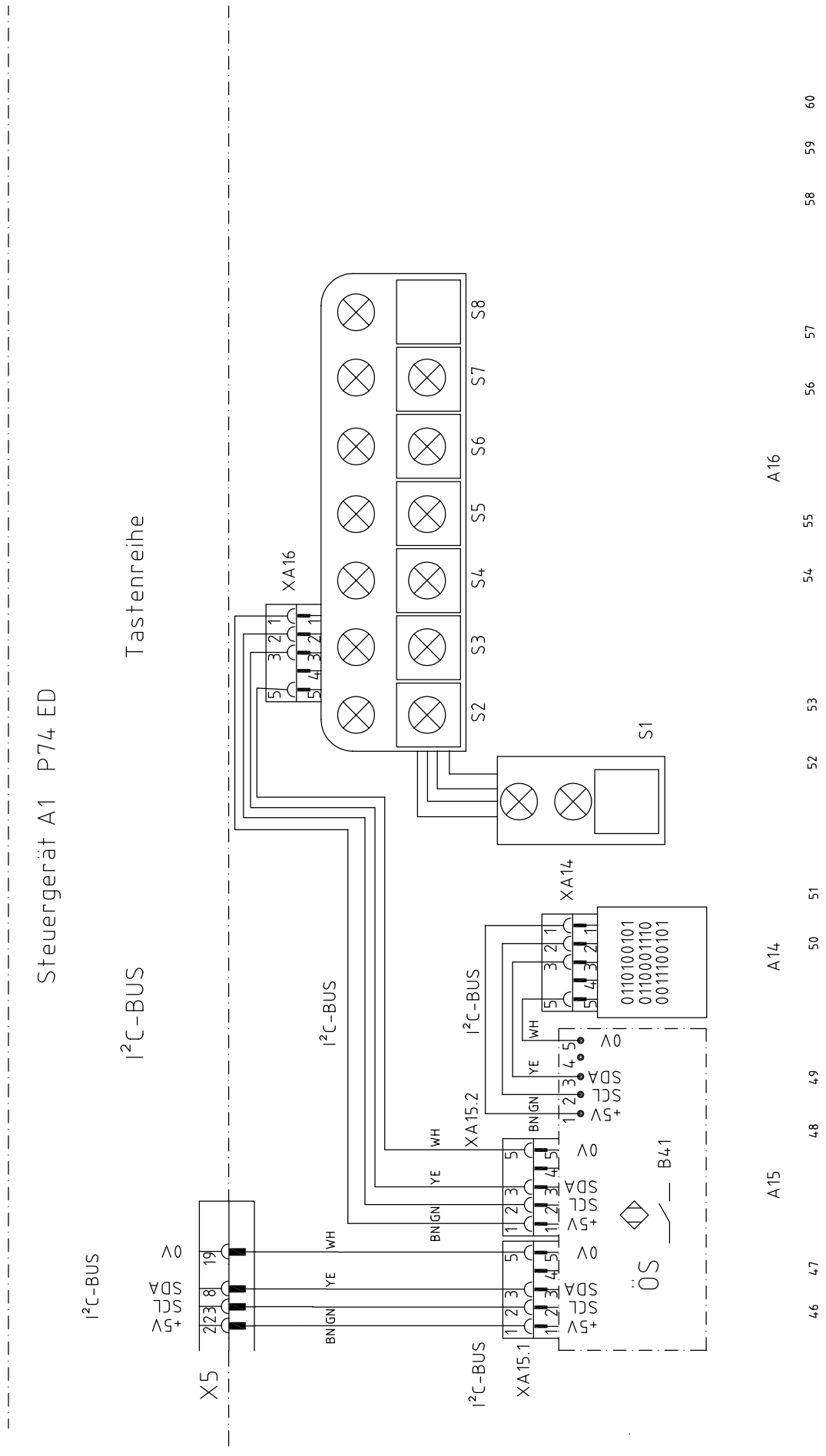
Steuergerät A1 P74 ED
Tastenreihe
I²C-BUS
I²C-BUS
I²C-BUS
I²C-BUS
I²C-BUS
X5
XA16
XA14
XA15.2
XA15.1
S1
S2
S3
S4
S5
S6
S7
S8
B41
ÖS
0V
SDA
SCL
+5V
WH
YE
GN
BN
0110100101
0110001110
0011100101
A16
A14
A15
46
47
48
49
50
51
52
53
54
55
56
57
58
59
60

PFAFF® Industrial



Europäische Union
Wachstum durch Innovation – EFRE



PFAFF Industriesysteme
und Maschinen AG

Hans-Geiger-Str. 12 - IG Nord
D-67661 Kaiserslautern

Phone: +49-6301 3205 - 0
Fax: +49-6301 3205 1386
E-mail: info@pfaff-industrial.com

Hotlines:
Technical service: +49-175/2243-101
Application consultance: +49-175/2243-102
Spare-parts hotline: +49-175/2243-103

Printed in Germany

© PFAFF Industriesysteme und Maschinen AG 2009, PFAFF is the exclusive trademark of VSM Group AB.PFAFF Industriesysteme und Maschinen AG is an authorized licensee of the PFAFF trademark.