PFAFF® Industrial

3108 -1/1306 -1/1310 with BDF P1

INSTRUCTION MANUAL

This instruction manual applies to machines from serial number **2 774 709**, software version **0394/008** (3108-1/1310) and **0408/008** (3108-1/1306) onwards.

296-12-19 145/002
Betriebsanleitung engl. 03.11

The reprinting, copying or translation of PFAFF Instruction Manuals, whether in whole or in part, is only permitted with our previous authorization and with written reference to the source.

PFAFF Industriesysteme
und Maschinen AG

Hans-Geiger-Str. 12 - IG Nord
D-67661 Kaiserslautern

Contents ..... Chapter - Page

1	**Safety**	**6**
1.01	Directives	6
1.02	General notes on safety	6
1.03	Safety symbols	7
1.04	Important notes for the user	7
1.05	Notes for operating and technical staff	8
1.05.01	Operating staff	8
1.05.02	Technical staff	8
1.06	Danger warnings	9
2	**Proper use**	10
3	**Specifications**	**11**
4	**Disposal of Machine**	**12**
5	**Transportation, packing and storage**	**13**
5.01	Transportation to customer's premises	13
5.02	Transportation inside the customer's premises	13
5.03	Disposal of packing materials	13
5.04	Storage	13
6	**Explanation of symbols**	**14**
7	**Controls**	**15**
7.01	On/off switch	15
7.02	Foot switch	15
7.03	Control panel	16
8	**Mounting and commissioning the machine**	**17**
8.01	Mounting	17
8.02	Mounting the spool holder	18
8.03	Commissioning	18
8.04	Switching the machine on/off	19
8.05	Switching the key tone on / off	20
8.06	Check/adjust zero points	21
8.07	Adjusting the potentiometer for speed reduction	23
9	**Preparation**	**24**
9.01	Inserting the needle	24
9.02	Winding the bobbin thread, regulating the winder tension	25
9.03	Changing the bobbin / adjusting the bobbin thread tension	26
9.04	Threading needle thread/adjusting needle thread tension	27

Contents ..... Chapter - Page

9.05	Setting the lever pressure	28
9.06	Selecting the program number	29
9.07	Selecting / configuring a sequence	30
9.07.01	Selecting a sequence	30
9.07.02	Configuring a sequence	31
9.08	Selecting / combining linked programs	32
9.08.01	Selecting linked programs	32
9.08.02	Combining linked programs	33
9.09	Setting the bobbin thread stitch counter	34
10	**Sewing**	**35**
10.01	Sewing with individual programs	35
10.02	Sewing with sequences	37
10.03	Sewing with linked programs	39
10.04	Program interruption	40
11	**Input**	**41**
11.01	Overview of the functions in the input mode	41
11.02	Creating / altering seam programs	43
11.02.01	Entering a comment	45
11.02.02	Block functions	46
11.02.03	Image functions	48
11.02.04	Inserting functions	50
11.02.05	Other functions	52
11.03	An example for programming a seam	54
11.04	Program management	61
11.05	Rights of access	63
12	**Care and maintenance**	**66**
12.01	Servicing and maintenance intervals	66
12.02	Cleaning the machine	66
12.03	Lubricating	67
12.04	Lubricate clamp drive	68
12.05	Checking/regulating the air pressure	69
12.06	Emptying/cleaning the water bowl of the air filter/regulator	69
13	**Adjustment**	**70**
13.01	Notes on adjustment	70
13.02	Tools, gauges and other accessories for adjusting	70
13.03	Abbreviations	70
13.04	Explanation of the symbols	70
13.05	Adjusting the sewing head	71

Contents ..... Chapter - Page

13.05.01 Basic position of the balance wheel (adjustment aid) 71
13.05.02 Preliminary adjustment of the needle height 72
13.05.03 Needle rise, hook clearance and needle height 73
13.05.04 Reversing point of hopping foot 74
13.05.05 Hopping foot lift 75
13.05.06 Adjusting hopping foot pressure 76
13.05.07 Adjusting hopping foot height 77
13.05.08 Regulating the level of the hopping foot 78
13.05.09 Bobbin winder 79
13.05.10 Thread check spring and thread regulator 80
13.05.11 Lubrication 81
13.05.12 Basic position of the thread trimmer 82
13.05.13 Control cam to roller lever clearance (resting position) 83
13.05.14 Adjusting the control cam 84
13.05.15 Knife pressure 85
13.05.16 Manual cutting test 86
13.05.17 Aligning the clamp drive 87
13.05.18 Adjusting belt tensions 88
13.05.19 Reference points for the clamp drive 89
13.06 Service menu 92
13.06.01 Cold start 93
13.07 Sewing motor adjustments 94
13.08 Parameter settings 95
13.08.01 Selecting and altering parameters. 95
13.08.02 Parameter list 96
13.09 Internet update of the machine software 98
13.09.01 Update with null modem cable 98
13.09.02 Update with SD-card (control panel BDF S3 required) 99
13.10 Error message explanations 101
13.10.01 General errors 101
13.10.02 Sewing motor errors 103
13.10.03 Stitch generation errors 104
13.11 List of inputs and outputs 105

14 Circuit diagrams 106

1 Safety

1.01 Directives

This machine was built in accordance with the European regulations stated in the Conformity and Manufacturer's Declaration.
In addition to this Instruction Manual, also observe all generally accepted, statutory and other regulations and legal requirements - also those of the country in which the machine will be operated - and all valid environmental protection regulations!
Applicable local regulations of the social insurance society for occupational accidents or other supervisory organizations are to be strictly adhered to!

1.02 General notes on safety

- This machine must only be operated by adequately trained operators and only after having completely read and understood the Instruction Manual!
- All Notes on Safety and Instruction Manuals of the motor manufacturer are to be read before operating the machine!
- The Danger and Safety Instructions on the machine itself are to be followed!
- This machine must only be used for the purpose for which it is intended and must not be operated without its safety devices. All applicable safety regulations must be observed.
- When leaving the machine unattended and during maintenance work, the machine must be disconnected from the power supply by operating the main switch or by removing the plug from the mains!
- Daily maintenance work must only be carried out by appropriately trained personnel!
- When carrying out servicing or repair work on pneumatic devices, the machine must be disconnected from the pneumatic supply network! The only exceptions to this are adjustment work and functional tests carried out by appropriately trained personnel!
- Repair work and special maintenance work must only be carried out by specialists or appropriately trained personnel!
- Work on electrical equipment must only be carried out by appropriately trained specialist personnel!
- Work is not permitted on parts and equipment which are connected to the power supply! Exceptions to this are contained in the regulations EN 50110.
- Modifications and alterations to the machine must only be carried out pursuant to all relevant safety regulations!
- Only spare parts which have been approved by us are to be used for repairs! We expressly point out that any replacement parts or accessories not supplied by us have not been tested and approved by us. The installation and/or use of any such products may result in negative changes to the constructional characteristics of the machine. We are not liable for any damage which may be caused by non-original parts.

1.03 Safety symbols



Danger!
Special points to observe.



Danger of injury to operating or technical staff!



Caution

Do not operate without finger guard and safety devices.

Before threading, changing bobbin and needle, cleaning etc. **switch off main switch**.

1.04 Important notes for the user

- This instruction manual belongs to the equipment of the machine and must be available to the operating staff at all times.
- This instruction manual must be read before the machine is operated for the first time.
- Both operating and technical staff must be instructed on the safety devices of the machine and on safe working methods.
- It is the duty of the user to operate the machine in perfect running order only.
- The user must ensure that none of the safety devices are removed nor put out of working order.
- The user must ensure that only authorized persons operate and work on the machine.

For further information please refer to your PFAFF agency.

1.05 Notes for operating and technical staff

1.05.01 Operating staff

Operating staff are the persons responsible for setting up, operating and cleaning the machine and for eliminating any malfunctioning in the sewing area.

The operating staff is obliged to observe the following points:

- The notes on safety in this instruction manual must always be observed!
- Any working methods, which adversely affect the safety of the machine, must be avoided!
- Loose-fitting clothing should be avoided. No jewellery, such as chains and rings, should be worn!
- Ensure that only authorised persons enter the danger area of the machine!
- Any changes occurring on the machine, which may affect its safety, must be reported to the user immediately.

1.05.02 Technical staff

Technical staff are persons who have been trained in electrical engineering/electronics and mechanical engineering. They are responsible for lubricating, servicing, repairing and adjusting the machine.

The technical staff is obliged to observe the following points:

- The notes on safety in this instruction manual must always be observed!
- Before carrying out any adjustment or repair work the main switch must be switched off and measures taken to prevent it from being switched on again!
- Never work on parts or equipment still connected to the power supply! Exceptions are only permissible in accordance with the regulations EN 50110.
- All safety covers must be replaced after the completion of maintenance or repair work!

1.06 Danger warnings

A working area of 1 m must be kept free both in front of and behind the machine, so that easy access is possible at all times.

Never put your hands in the sewing area during sewing!
Danger of injury by the needle!

Never leave objects on the table while adjusting the machine settings! Objects can become trapped or be slung away! Danger of injury by hurled objects!

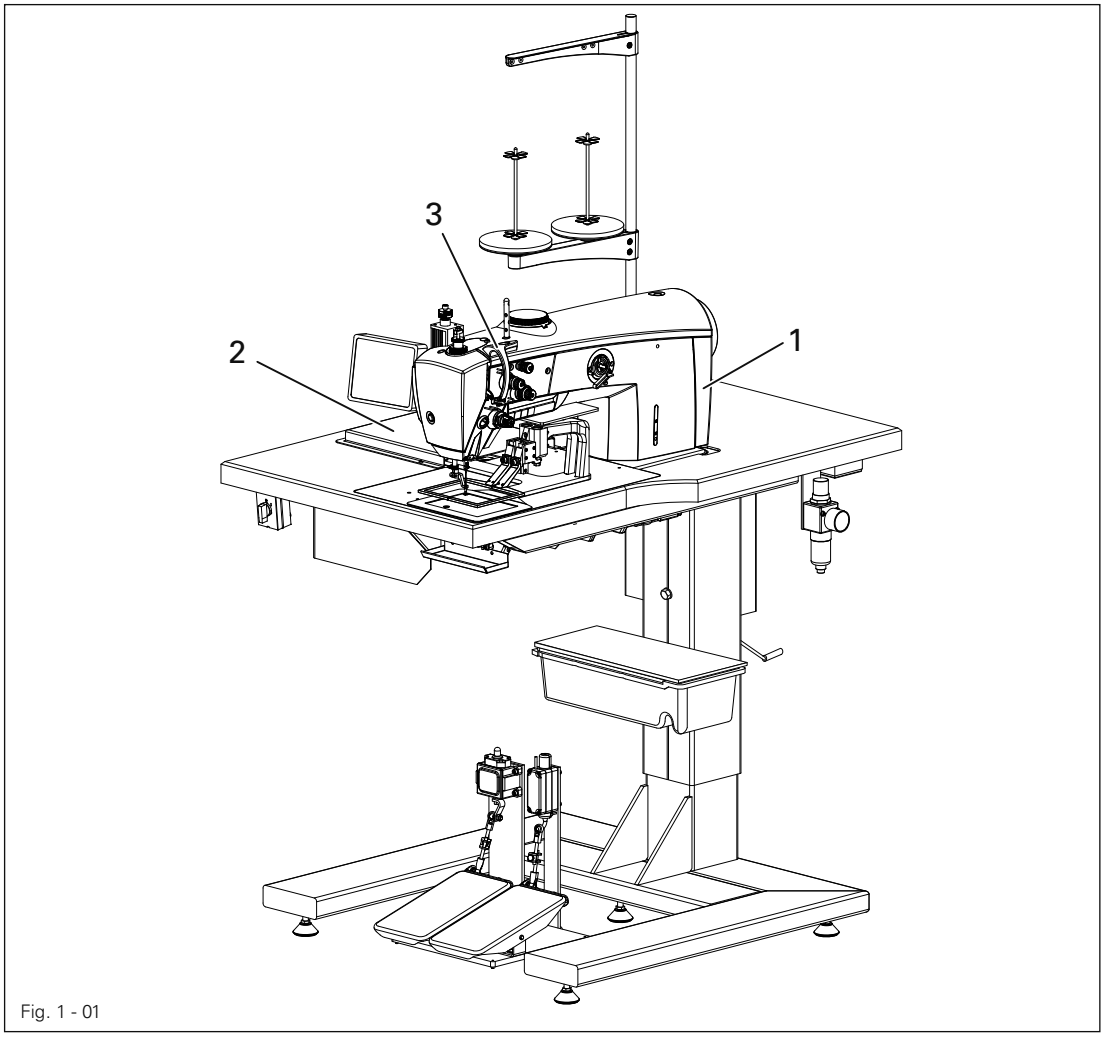

Fig. 1 - 01

Do not operate the machine without the protective covers 1 and 2!
Danger of crushing between moving parts of the pneumatic and/or transport devices.

Do not operate the machine without take-up lever guard 3!
Danger of injury by the movement of the take-up lever!

2 Proper use

The machines **3108-1/1306** and **3108-1/1310** are small area backtack automats for the production of backtack and assembly seams in the shoe, leather, plastic, and automotive industry.



Any and all uses of this machine which have not been approved of by the manufacturer are considered to be inappropriate! The manufacturer cannot be held liable for any damage caused by the inappropriate use of the machine! The appropriate use of the machine means that all operational, adjustment, maintenance and repair measures required by the manufacturer are to be observed!

3 Specifications▲

Max. sewing speed:..... 2800 s.p.m.
Max. stitch length: ..... 0,1 - 12 mm
Stitch type:.....301 (lockstitch)

Needle system:..... 134-35 KK
Needle size ..... 80 – 160

Operating voltage: .....230 V ± 10%, 50/60 Hz, A/C
Power requirement: .....2.2 kW
Leakage current ..... ≤ 5 mA◆

Control range:
3108-1/1306..... 130 x 60 mm
3108-1/1310..... 130 x 100 mm
Storage capacity:: .....25.000 stitches

Min. working pressure:..... min. 4,5 - max. 6 bar
Air consumption:.....approx. 15l/cycle

Max. hopping foot lift:.....9 mm
Max. through-passage under clamp: .....20 mm

Machine dimensions:
Length:..... approx. 1035 mm
Width: .....approx. 800 mm
Height: ..... approx. 1180 mm
Table height:.....840 mm

Net weight: .....150 kg

Ambient temperature
85% rel. humidity (condensation not permitted): ..... 5 – 40° C

Noise data
Emission sound pressure level at the workplace
at a sewing speed of 3000 spm ..... L_{pA} < 81 dB(A)■
(Noise measurement in acc. with DIN 45 635-48-A-1, ISO 11204, ISO 3744, ISO 4871)

▲ Subject to alteration

◆ Due to the use of network filters there is a nominal leakage current of ≤ 5 mA.

■ K_{pA} = 2,5 dB

4 Disposal of Machine

- Proper disposal of the machine is the responsibility of the customer.
- The materials used for the machine are steel, aluminium, brass and various plastic materials. The electrical equipment comprises plastic materials and copper.
- The machine is to be disposed of according to the locally valid pollution control regulations; if necessary, a specialist ist to be commissioned.



Care must be taken that parts soiled with lubricants are disposed of separately according to the locally valid pollution control regulations!

5 Transportation, packing and storage

5.01 Transportation to customer‘s premises

The machines are delivered completely packed.

5.02 Transportation inside the customer‘s premises

The manufacturer cannot be made liable for transportation inside the customer‘s premises nor to other operating locations. It must be ensured that the machines are only transported in an upright position.

5.03 Disposal of packing materials

The packing materials of this machine comprise paper, cardboard and VCE fibre. Proper disposal of the packing material is the responsibility of the customer.

5.04 Storage

If the machine is not in use, it can be stored as it is for a period of up to six months, but It should be protected against dust and moisture.
If the machine is stored for longer periods, the individual parts, especially the surfaces of moving parts, must be protected against corrosion, e.g. by a film of oil.

6 Explanation of symbols

In this instruction manual, work to be carried out or important information is accentuated by symbols. These symbols have the following meanings:

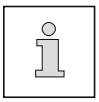

Note, information



Cleaning, care



Lubrication

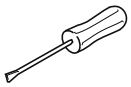

Maintenance, repairs, adjustment, service work
(only to be carried out by technical staff)

7 Controls

7.01 On/off switch

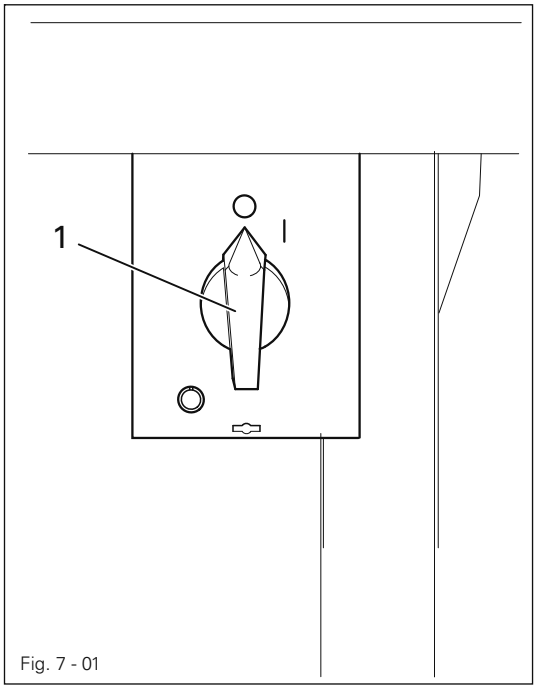

Fig. 7 - 01

- By turning on/off switch **1**, the power supply to the machine is switched on or off.

7.02 Foot switch

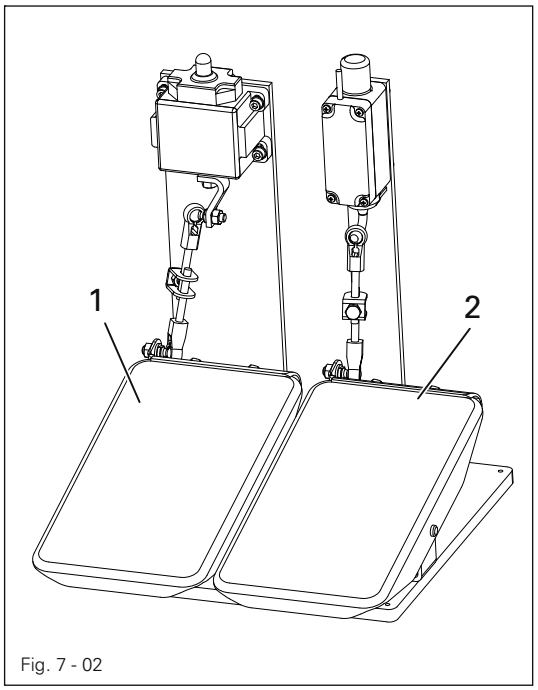

Fig. 7 - 02

- Foot switches **1** and **2** have the following functions:

Foot switch 1:

+1 = left clamp up/down

Foot switch 2:

+1 = right clamp up/down

+2 = sewing start

7.03 Control panel

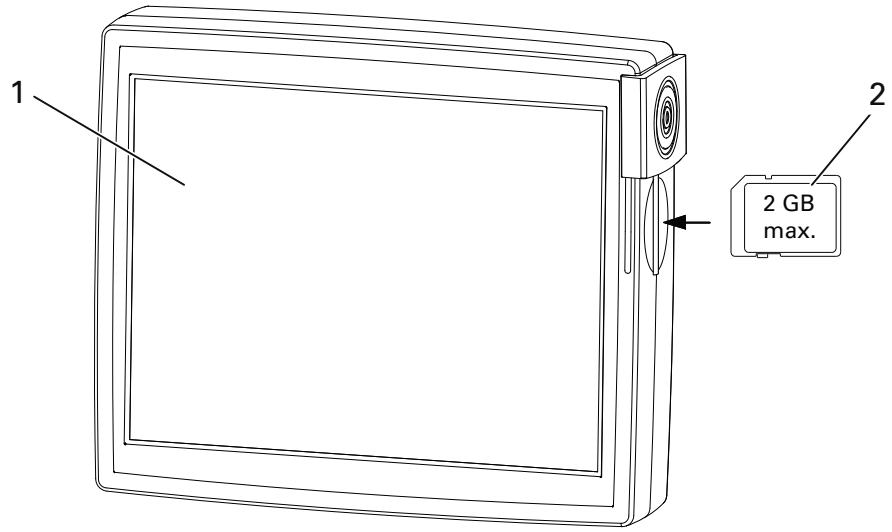

Fig. 7 - 03

The current operating conditions are displayed on control panel **1**. Operation takes place in a constant dialogue between the control unit and the operator. For this purpose, depending on the operating condition of the machine, different symbols and/or texts are displayed. If the symbols or texts are framed, these show functions which can be selected by pressing the appropriate position on the monitor. By pressing the corresponding function this is carried out or switched on or off immediately, or a further menu appears, e.g. for entering a value. Activated functions are shown with inverted symbols. Apart from the bobbin change function, the pictograms and texts without border are only for display purposes and cannot be called up by pressing them.
To read sewing programs or install machine software, use the sd-card **2** in the control panel.

Description of the functions



Normal symbol = function switched off (inactive)



Inverted symbol = function switched on (active)

8 Mounting and commissioning the machine

After unpacking the machine, check it for any transport damage. In case of damage, inform the shipping company and the responsible PFAFF dealer.

The machine must only be mounted and commissioned by qualified personnel!
All relevant safety regulations are to be observed!

8.01 Mounting

At the machine's location, there must be a stable and horizontal surface as well as suitable electricity and compressed air supplies (see chapter 3 Specifications).

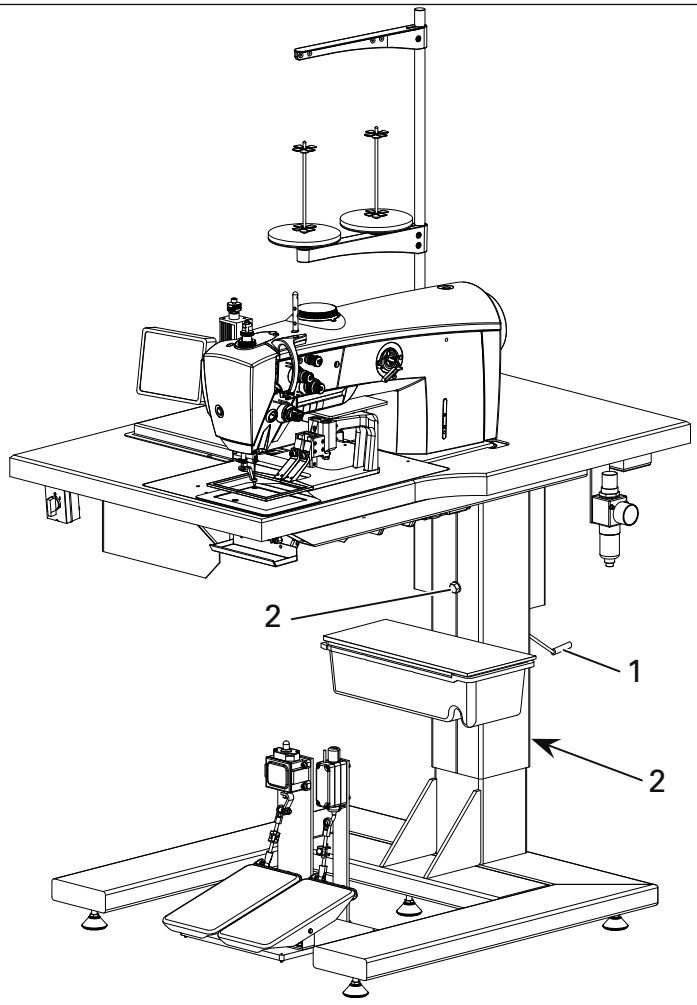

Fig. 8 - 01

- Lift the machine with a forklift from the shipping pallet.
- Level the machine just above the ground, and adjust the feet accordingly.
- The table height can be adjusted at crank 1 after loosening screws 2.

8.02 Mounting the spool holder

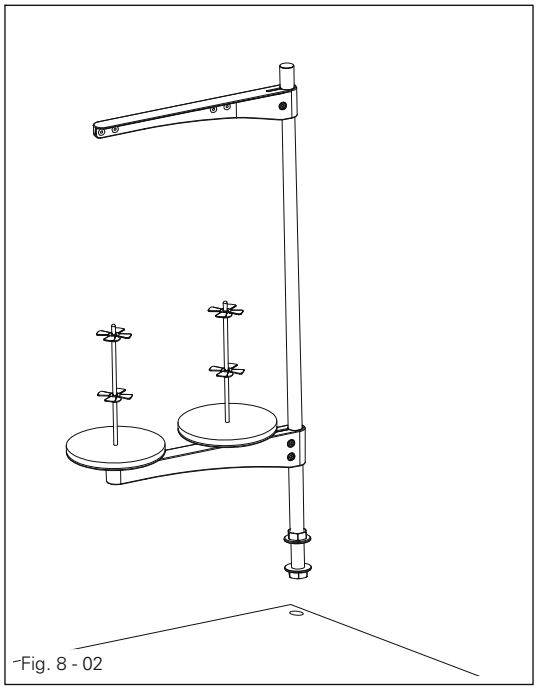

Fig. 8 - 02

- Mount the spool holder according to Fig. 8.02.

8.03 Commissioning

- Before commissioning the machine, clean it thoroughly and lubricate it, or pour in oil, see Chapter 12 Care and Maintenance!
- The machine, in particular the electric wires and pneumatic connection tubes, must be examined for any damage.
- Have skilled personnel check if the machine can be operated with the available mains voltage.



Do not operate the machine if there is any discrepancy.



The machine may only be connected to an earthed socket!

- Connect machine to the compressed air system.
  The manometer on the air filter/lubricator unit must display a pressure of 6 bar.
  If necessary, set to the correct value (see chapter 12.05 Checking / regulating air compression).

8.04 Switching the machine on/off

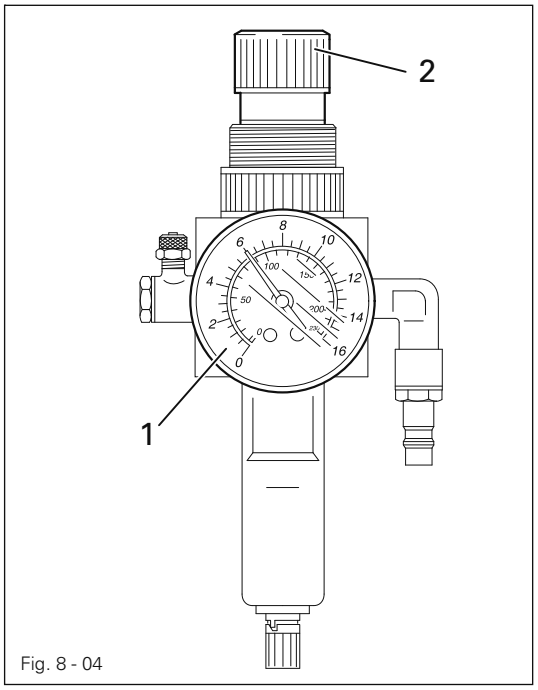

Fig. 8 - 04

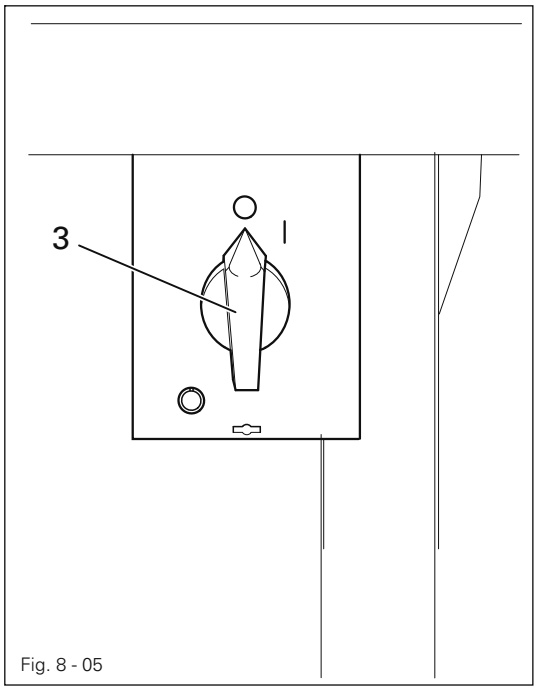

Fig. 8 - 05

- Check air pressure on pressure gauge **1** and, if necessary, adjust air pressure with adjusting knob **2**.
- Turn main switch **3** to position "I"

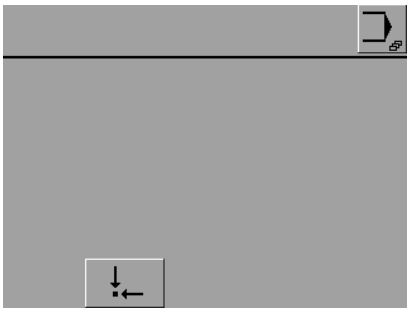

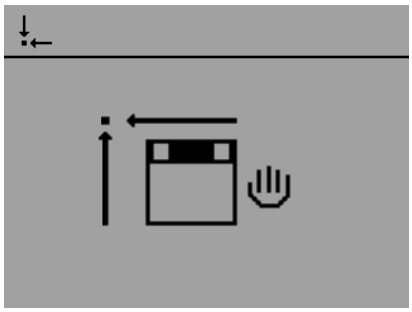

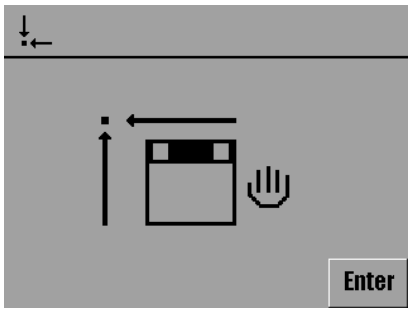

- After booting the machine control unit, to start the machine, move it back to its basic position.
  For programs with obstacles, the clamp must be pushed by hand into basic position (= needle into the rear, left corner of the clamp).
- After shifting the clamp manually, press the "Enter" button.
- Carry out a test run, see Chapter **10 Sewing.**

At first commissioning of the machine, the zero points and the potentiometer for motor speed reduction must be checked and set (see chapter **8.05** and **8.07**).

- To switch off the machine, turn main switch **3** to position "**0**".

Description of other functions on the display

Input menu
This function is used to call up the input mode, see Chapter **11 Input**.

8.05 Switching the key tone on / off

- Switch on the machine.



- Call up the input mode.

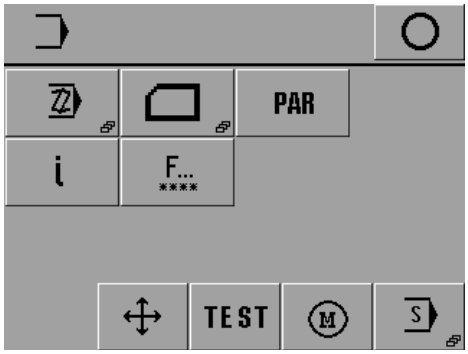

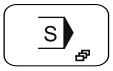

- Select the service menu.

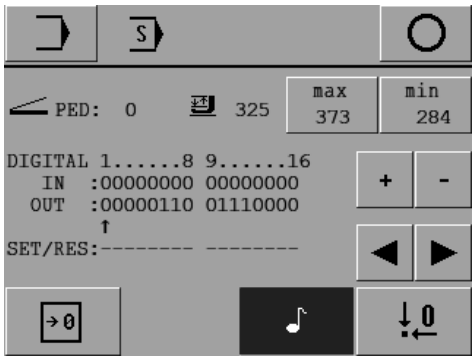



- Switch the key tone off or on.



- Conclude the input.

8.06 Check/adjust zero points

Before commissioning the machine, or after changing the controller or one of the initiators of the clamp drive, it is necessary to set the zero points.

- Call up the input mode.

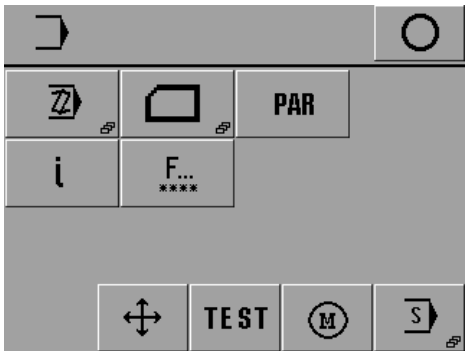

- Select the service menu.

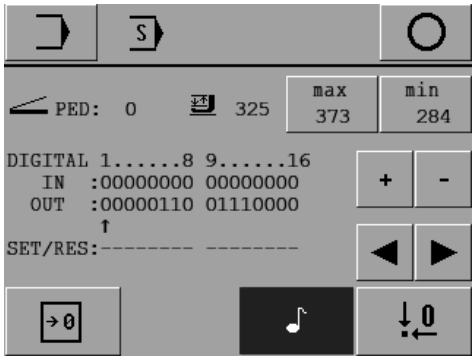

- Call the function "Set zero position".

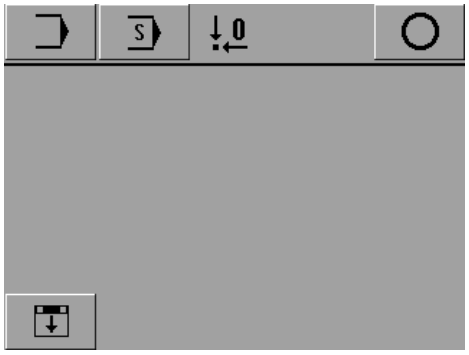

- Close clamp.

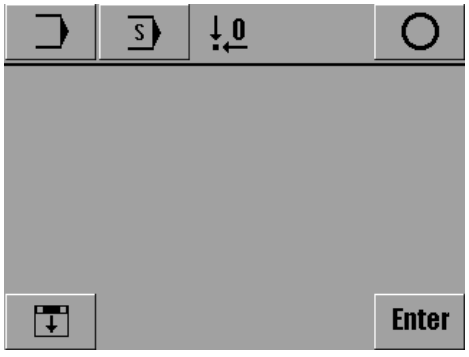

- Confi rm the operation and continue the cycle.

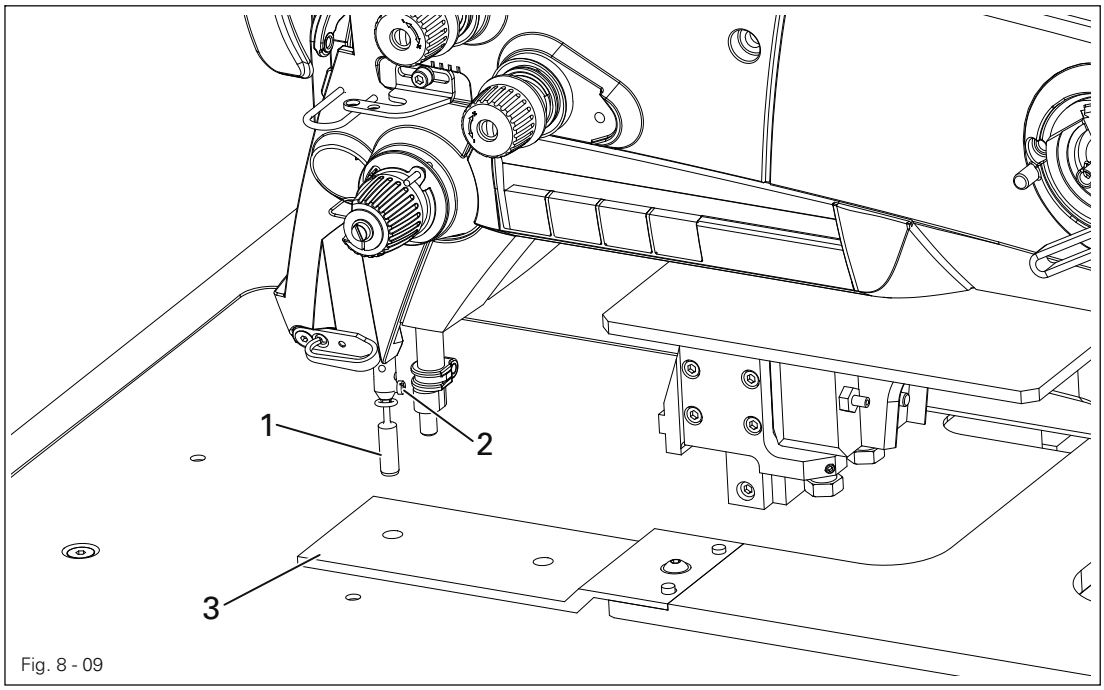

Fig. 8 - 09

- Unscrew material presser foot.
- Insert adjustment pin **1** into the needle bar and secure using screw **2**.
- Screw on clamp setting gauge **3** (Order No. **95-295 500-05**).
- Turn the handwheel to check whether adjustment pin **1** can be inserted into the adjustment hole on gauge **3**.

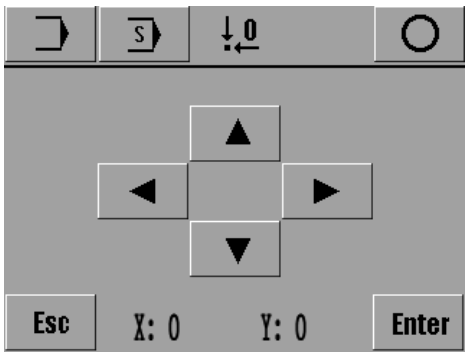

- If necessary, correct the clamp position accordingly with the direction symbols.

Enter
- Save the setting, loosen screw **2** and remove adjustment pin **1**.
- Unscrew setting gauge **3**.

○
- End zero points entry.

8.07 Adjusting the potentiometer for speed reduction



- Call up the input mode.

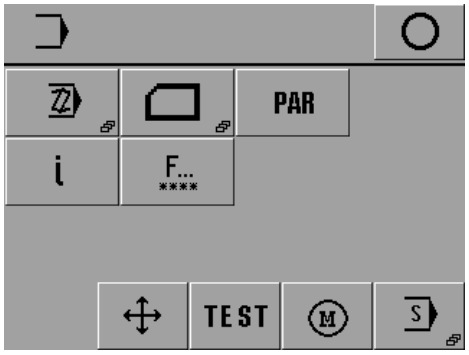

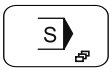

- Select the service menu.

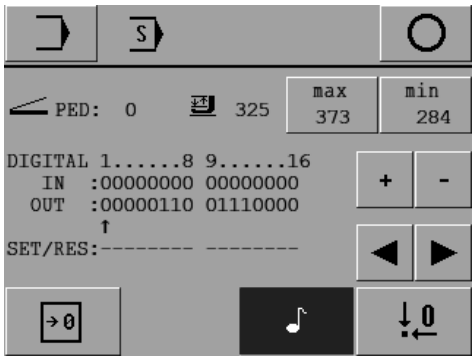

- Set the adjustment wheel at smallest stroke "0".
- Press button 'min' to store the lower value.
- Set the adjustment wheel at maximum stroke "9".
- Press button 'max' to store the upper value.

9 Preparation

All regulations and instructions in this Instruction Manual are to be observed!
Special attention is to be paid to the safety regulations!

All preparation work is only to be carried out by appropriately trained personnel!

9.01 Inserting the needle

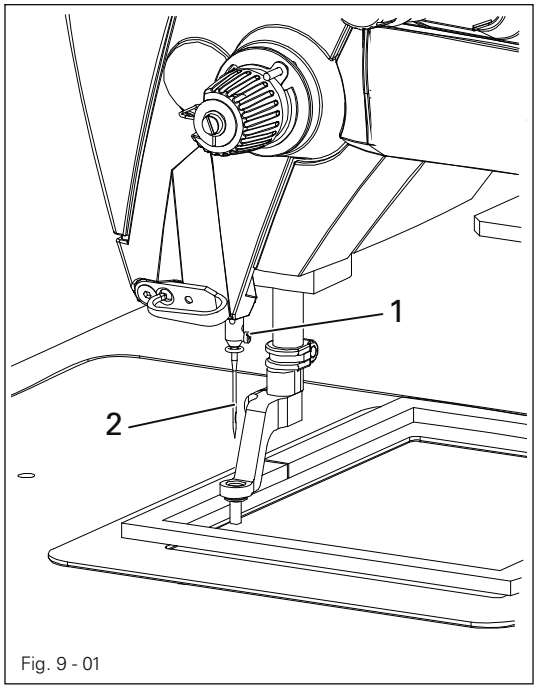

Fig. 9 - 01

Only use needles from the system intended for the machine, see Chapter **3 Specifications.**

- Switch on the machine.
- Call up the threading aid function.
  Machine moves to thread-in position, sewing start is disengaged.
  (when clamping with obstacles, the clamp must be pushed manually into thread-in position).
- Loosen screw **1** and insert needle **2** as far as possible into the needle bar.
- Adjust needle **2** so that the long needle groove is pointing in the direction of the top cover of the sewing head, and tighten screw **1**.
- Move the machine to its basic position

9.02 Winding the bobbin thread, regulating the winder tension

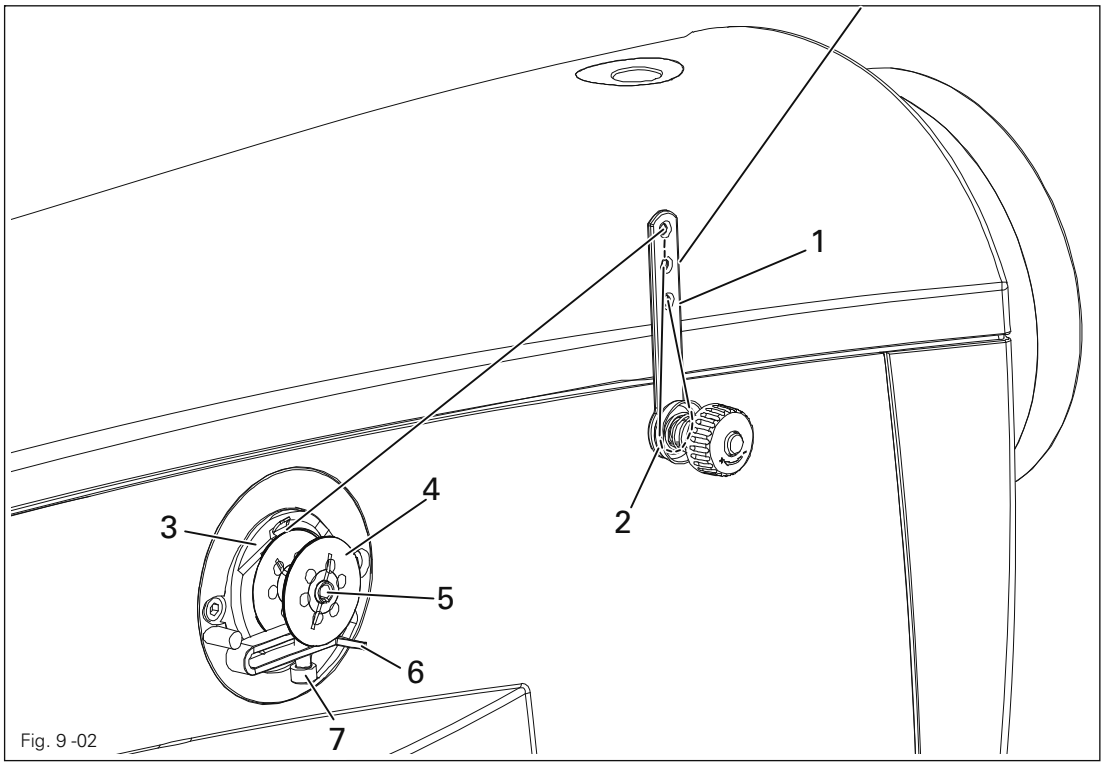

Fig. 9 -02

- Draw the thread from the reel stand through guide hole **1** into the bobbin winder tension unit **2** and then behind the thread clamp **3**.
- Cut off the thread in thread clamp **3**. The thread is retained.
- Place empty bobbin **4** on the bobbin winder spindle **5**.
- To switch on the bobbin winder, push up lever **6**.

The bobbin is wound during sewing.

- The bobbin winder stops automatically, when the bobbin **4** is filled sufficiently.
- Remove full bobbin **4** and cut off the thread in thread clamp **3**.
- The tension of the thread on bobbin **4** can be adjusted on the bobbin winder tension unit **2**.
- The volume of thread on bobbin **4** can be adjusted with screw **7**.
- If separate winding is required, proceed as follows:
- Call up bobbin winding function.
- Adjust winding speed.

1500

- Start the winding function using the treadle or the sewing start button.

9.03 Changing the bobbin / adjusting the bobbin thread tension

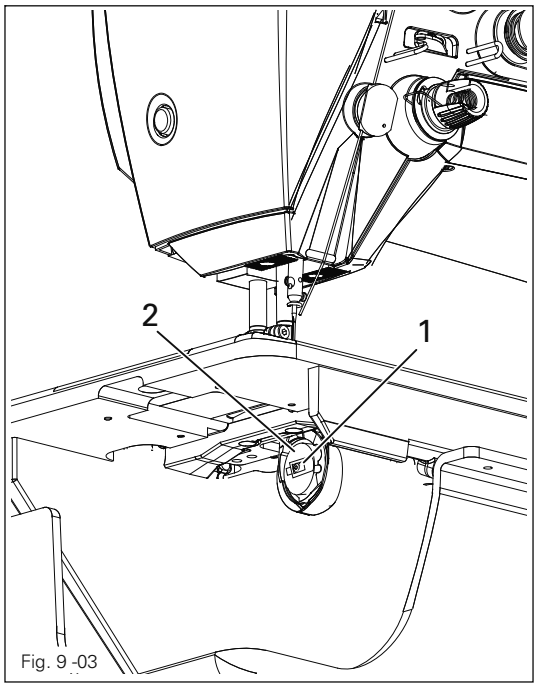

Fig. 9 -03

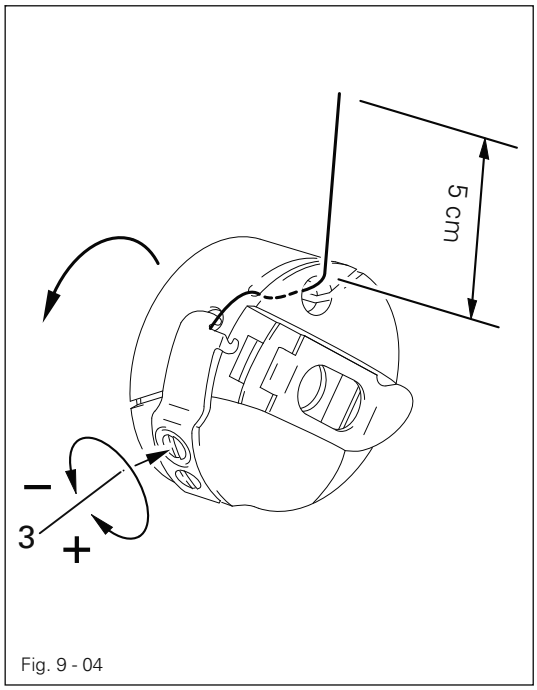

Fig. 9 - 04

- Call up the threading aid function.
  Machine moves to thread-in position, sewing start is disengaged.
- Raise lever 1 and remove bobbin casing 2.
- Place the filled bobbin into the hook so that it turns in the direction of the arrow when thread is pulled off.
- Close lever 1.
- Pass the thread through the slot under the spring according to Fig. 9 - 04.
- Adjust the thread tension by turning screw 3.
- Move the machine to its basic position

9.04 Threading needle thread/adjusting needle thread tension

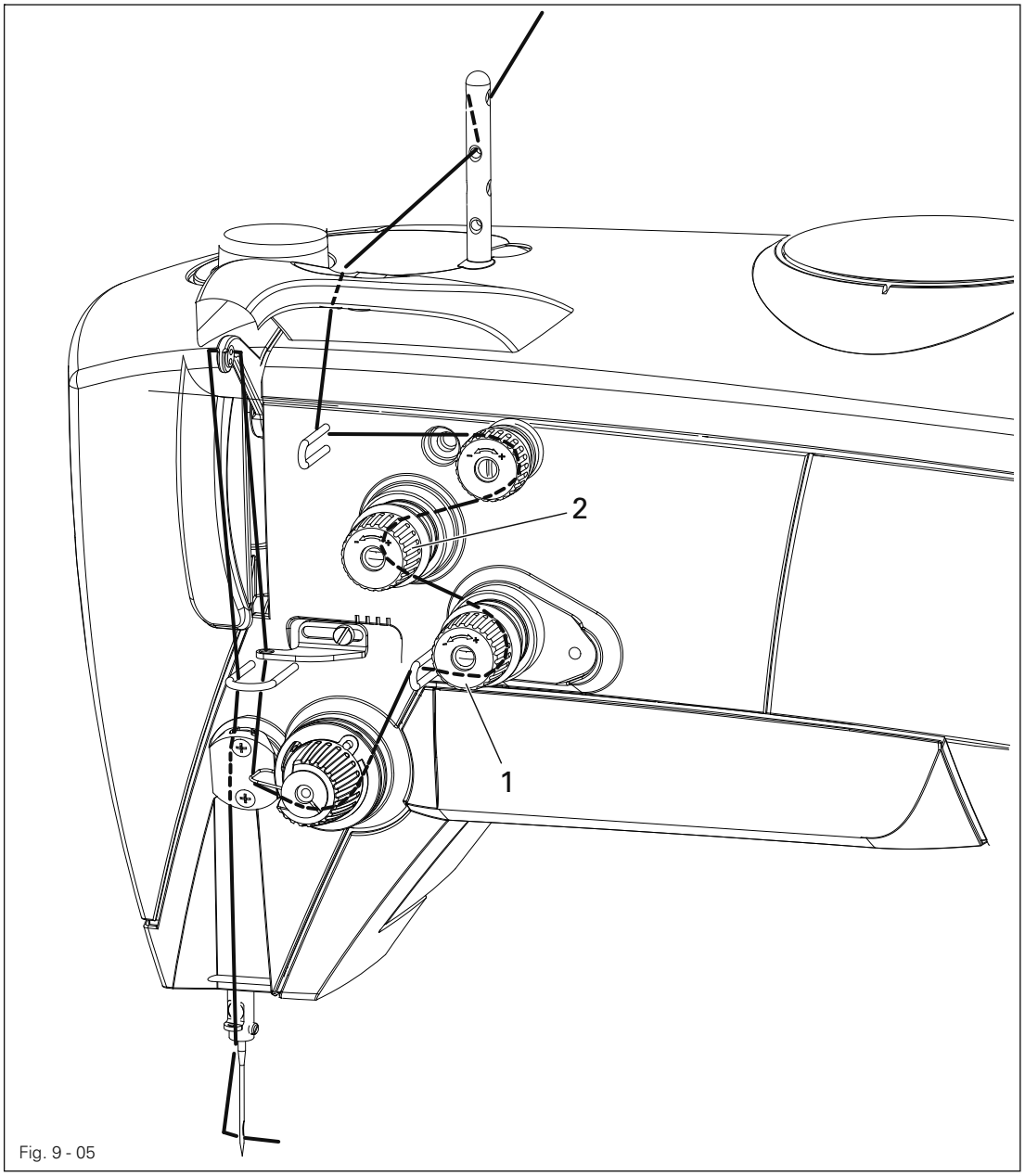

Fig. 9 - 05

- Switch on the machine.
- Call up the threading aid function.
  Machine moves to thread-in position, sewing start is disengaged.
- Thread the machine as shown in Fig. 9 - 05.
- Regulate the needle-thread tension by turning milled screw 1.

Secondary tension is regulated by turning the knurled thumb screw.

- Move the machine to its basic position

9.05 Setting the lever pressure



Fig. 9 -05

- The lever pressure must be adjusted to the respective material to ensure perfect material feed.
- The max. lever pressure must not exceed **0.25** MPa.
- The lever pressure is adjusted at knob **1**.

9.06 Selecting the program number

- Switch on the machine.

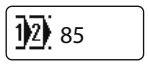

- Call up the program number input menu.

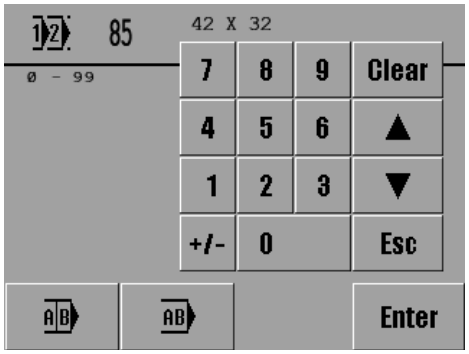

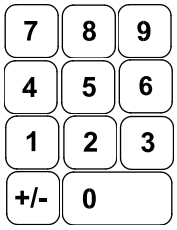

- Select the desired program number (0 – 99) using the number block.



- Confirm the selection and quit the selection menu.

Description of the other functions



Clear
This function sets the value at "0".



Arrow keys
These functions increase or reduce the value.



Esc
This function stops the input without taking over the value entered.



Sequence selection
This function opens the menu for selecting or configuring the sequence, see Chapter 9.07 Selecting / configuring the sequence.

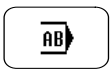

Linked programs
This function opens the menu for selecting or combining linked programs, see Chapter 9.08 Selecting / combining linked programs.

9.07 Selecting / configuring a sequence

9.07.01 Selecting a sequence

Instead of selecting a program number, it is also possible to select a corresponding sequence, providing that individual seam programs have been allocated to a sequence, see Chapter **9.07.02 Configuring a sequence**

- Switch on the machine.

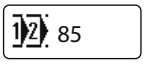

- Call up the menu for entering the program number.



- Call up the menu for entering the sequence.

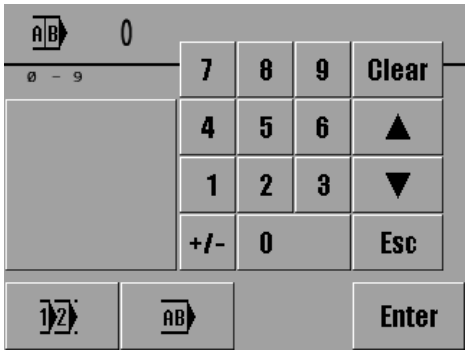

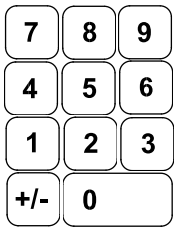

- Select the desired sequence number (**0** – **9**) using the number block.



- Confirm the selection and quit the selection menu.

Description of the other functions



Clear
This function sets the value at "**0**".



Arrow keys
These functions increase or reduce the value.



Esc
This function stops the input without taking over the value entered.

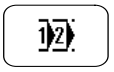

Program selection
This function opens the menu for selecting a program, see Chapter **9.05** Selecting a program number.

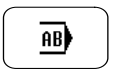

Linked programs
This function opens the menu for selecting or combining linked programs, see Chapter **9.07** Selecting / combining linked programs.

9.07.02 Configuring a sequence

Up to 8 seam programs can be allocated to a sequence. During sewing the seam programs of a selected sequence appear as a function on the display and can be selected directly.

- Call up the menu for entering the sequence and select the desired sequence number without leaving the selection menu, see 9.07.01 Selecting a sequence.

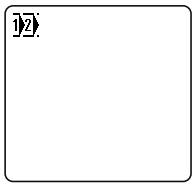

- Call up the sequence programming function.

- Configure the sequence from existing seam programs by entering the program numbers on the number block.

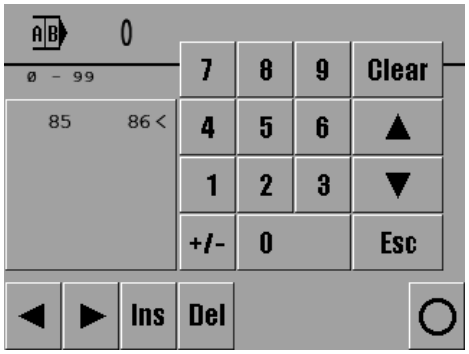

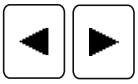

- The cursor in the window shows, which seam program has been taken out of the group, or at which position a new seam program has been inserted. The cursor is moved with the arrow keys.



- If applicable, insert (INS) the seam program at the current cursor position, or delete (DEL) the marked seam program from the sequence.



- Conclude the sequence programming function.

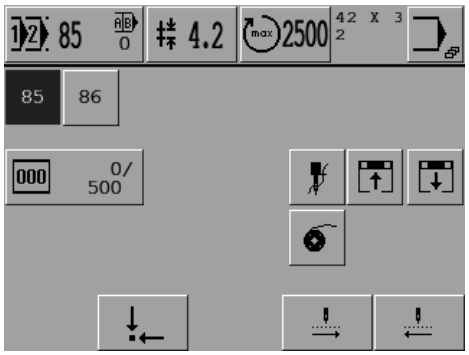



To enable, for example, quicker access to up to 8 different seam programs, the function for automatic switching to the next seam program of a sequence function can be switched off with parameter "005", see Chapter 13.08.02 Parameter list.

9.08 Selecting / combining linked programs

9.08.01 Selecting linked programs

Unlike sequences, linked programs can all be processed with one clamp. To be able to select linked programs, individual seam programs must have been linked, see Chapter 9.08.02 Combining linked programs.

- Switch on the machine.

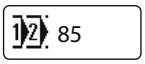

- Call up the menu for entering the program number.

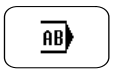

- Call up the menu for entering linked programs.

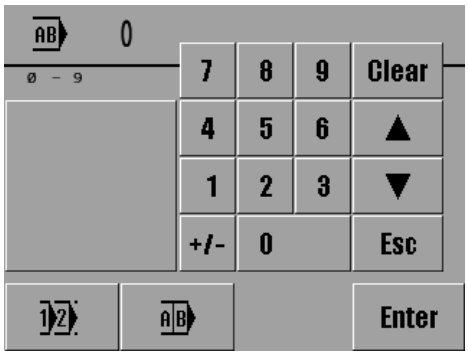

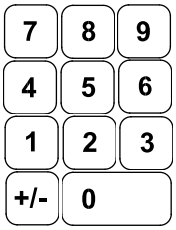

- Select the desired number for linked programs (0 – 9) using the number block.



- Confirm the selection and quit the selection menu.

Description of the other functions



Clear
This function sets the value at "0".



Arrow keys
These functions increase or reduce the value.



Esc
This function stops the input without taking over the value entered.

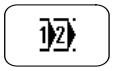

Program selection
This function opens the menu for selecting a program, see Chapter 9.05 Selecting a program number.



Sequence selection
This function opens the menu for selecting or configuring a sequence, see Chapter 9.07 Selecting / configuring a sequence.

9.08.02 Combining linked programs

Up to 8 seam programs can be combined. After the corresponding program number has been selected during sewing, the combined seam programs appear as a function on the display and can be selected directly.

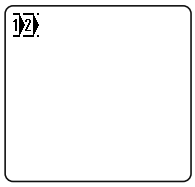

- Call up the menu for entering combined programs and select the desired number without leaving the selection menu, see Chapter 9.08.01 Selecting linked programs.
- Call up the combined programs programming function.

- Combine existing seam programs by entering the program numbers on the number block.

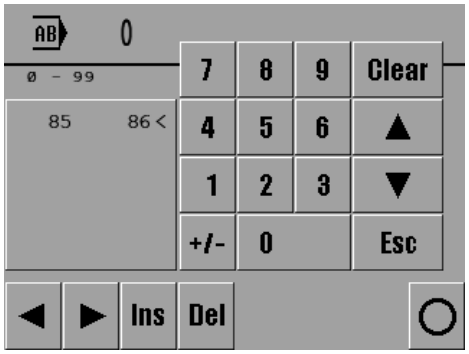

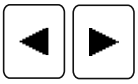

- The cursor in the window shows, which seam program has been taken out of the combination, or at which position a new seam program has been inserted. The cursor is moved with the arrow keys.



- If applicable, insert (INS) the seam program at the current cursor position, or delete (DEL) the marked seam program from the combination.



- Conclude programming.

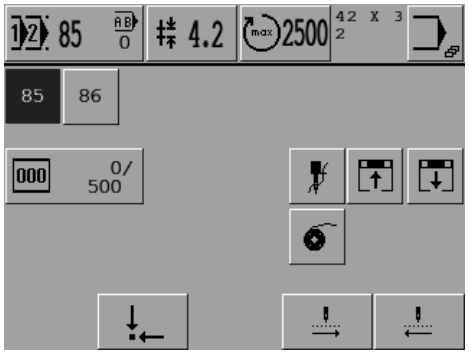



Switching among combined programs always takes place automatically.

9.09 Setting the bobbin thread stitch counter

- Switch on the machine.



- Call up the menu for entering the number of bobbin thread stitches.

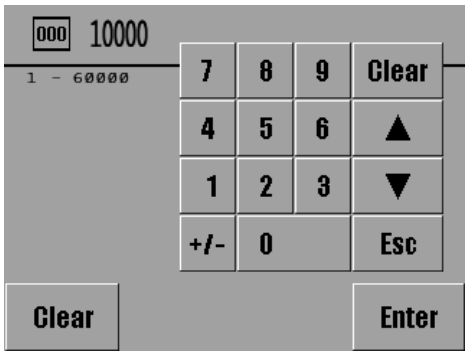

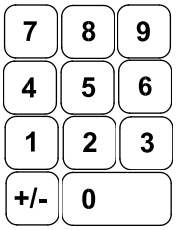

- Enter the number of stitches on the number block.



- Conclude the input.

Description of the other functions



Clear (on number block)
This function sets the input value at "0".



Arrow keys
These functions increase or reduce the value.



Esc
This function stops the input without taking over the value entered.

- On reaching the number of bobbin thread stitches, the machine stops automatically for bobbin changeover.
- A bobbin symbol appears on the display.

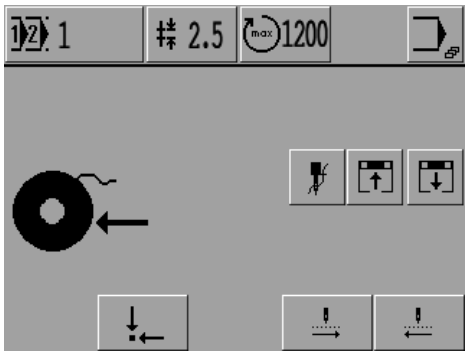



- After replacing the bobbin, the remaining bobbin thread counter (number of sewn stitches) is set to "0" by pressing the bobbin symbol.
- The machine is ready for operation again.

10 Sewing

The machine may only be operated by appropriately instructed personnel! The operating staff must make sure that only authorized persons are in the danger area of the machine!

In particular for the production, in addition to the input mode, see Chapter **11 Input**, the sewing mode is available. Here, depending on the program selection and the machine status, all relevant functions and settings for the production are shown on the display.

Before production the following conditions must be fulfilled:

- All safety devices must be attached and all covers closed see, Chapter **1.06 Danger warnings**.
- The machine must be properly installed and commissioned in accordance with Chapter **8 Installation and commissioning**.
- All setting-up work must have been carried out, see Chapter **9 Setting-up**.

10.01 Sewing with individual programs

- Switch on the machine.
- Select the desired program number, see Chapter **9.05** Selecting a program number.

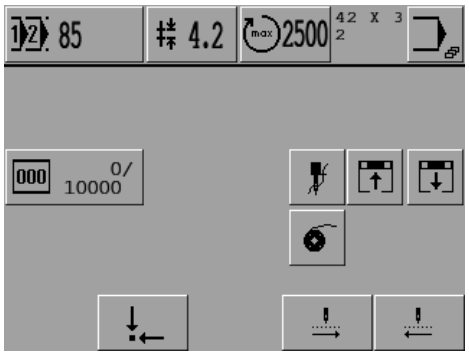

- Insert material.



- Close the clamp using the button or treadle.



- Start sewing using treadle or button.

Description of the functions

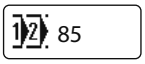

Program number selection
This function opens the menu for entering the program number. The current program number is shown in the symbol together with the appropriate parts program number.



Standard stitch length
This function opens the menu for entering the standard stitch length. The current stitch length is shown in the symbol.



Maximum speed
This function opens the menu for entering the maximum speed. The current maximum speed is shown in the symbol.

Comment
Here a comment assigned to the program is indicated.



Input menu
This function is used to call up the "input mode" see Chapter **11 Input**.



Bobbin thread stitch counter
This function opens the menu for entering and resetting the number of stitches for the bobbin thread.



Threading aid
This function is used to move the machine to thread-in position; sewing start is disengaged.

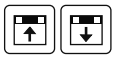

Clamp up/down.
This function is used to raise or lower the clamp.



Bobbin winding
This button is used to access the "Bobbin winding" function.



Basic position
This function is used to move the clamp guide, sewing station and clamp drive unit to the basic position.
For programs with obstacles, the clamp must be pushed by hand into basic position (= needle into the rear, left corner of the clamp).



Tacting forwards
This function is used to move forwards in sections in the seam pattern tact for tact. The seam cycle is sewn automatically, if the function is pressed longer.



Tacting backwards
This function is used to move backwards in sections in the seam pattern tact for tact. The seam cycle is sewn automatically, if the function is pressed longer.

10.02 Sewing with sequences

To sew with the function for moving automatically to the next sequence, parameter "005" must be set at "ON", see Chapter 13.08.02 Parameter list.

- Switch on the machine.
- Select the desired sequence, see Chapter 9.07.01 Selecting a sequence.

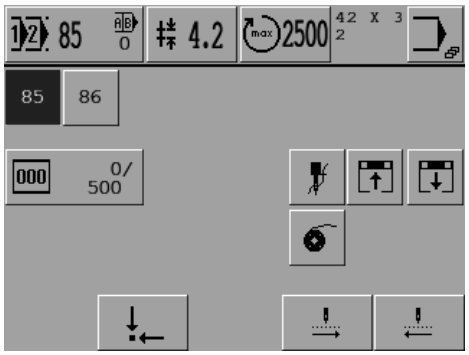

- Insert the clamp
- Start sewing process.

Description of the functions

Program number selection
This function opens the menu for entering the program number. The current program number is shown in the symbol. If the function for moving automatically to the next sequence is activated, the sequence symbol is shown as inverse.

Standard stitch length
This function opens the menu for entering the standard stitch length. The current stitch length is shown in the symbol.

Maximum speed
This function opens the menu for entering the maximum speed. The current maximum speed is shown in the symbol.

Comment
Here a comment assigned to the program is indicated.

Input menu
This function is used to call up the "input mode" see Chapter 11 Input.

Individual program
This function depends on the setting of parameter "005" (moving automatically to next sequence), see Chapter 13.08.02 Parameter list.
If the function for moving automatically to the next sequence is activated ("ON") function is used to show the symbol for the next individual program to be sewn as inverse.
If the function for moving automatically to the next sequence is deactivated ("OFF") this function is used for the quick selection of the highlighted seam programs.

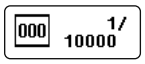

Bobbin thread stitch counter
This function opens the menu for entering and resetting the number of stitches for the bobbin thread.



Threading aid
This function is used to move the machine to thread-in position; sewing start is disengaged.

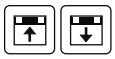

Clamp up/down.
This function is used to raise or lower the clamp.



Bobbin winding
This button is used to access the "Bobbin winding" function.



Basic position
This function is used to move the clamp guide, sewing station and clamp drive unit to the basic position.
For programs with obstacles, the clamp must be pushed by hand into basic position (= needle into the rear, left corner of the clamp).



Tacting forwards
This function is used to move forwards in sections in the seam pattern tact for tact. The seam cycle is sewn automatically, if the function is pressed longer.



Tacting backwards
This function is used to move backwards in sections in the seam pattern tact for tact. The seam cycle is sewn automatically, if the function is pressed longer.

10.03 Sewing with linked programs

- Switch on the machine.
- Select the desired number for linked programs, see Chapter **9.08.01 Selecting linked programs.**

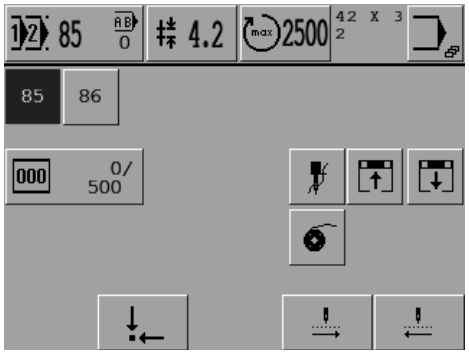

- Insert the clamp.
- Start sewing process.

Description of the functions

Program number selection
This function opens the menu for entering the program number. The current program number is shown in the symbol.

Standard stitch length
This function opens the menu for entering the standard stitch length. The current stitch length is shown in the symbol.

Maximum speed
This function opens the menu for entering the maximum speed. The current maximum speed is shown in the symbol.

Comment
Here a comment assigned to the program is indicated.

Input menu
This function is used to call up the "input mode" see Chapter **11 Input.**

Individual programs
With these functions it is possible to select the next individual program due to be processed.

Bobbin thread stitch counter
This function opens the menu for entering and resetting the number of stitches for the bobbin thread.

Threading aid
This function is used to move the machine to thread-in position; sewing start is disengaged.

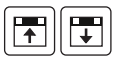

Clamp up/down.
This function is used to raise or lower the clamp.



Bobbin winding
This button is used to access the "Bobbin winding" function.



Basic position
This function is used to move the clamp guide, sewing station and clamp drive unit to the basic position.
For programs with obstacles, the clamp must be pushed by hand into basic position (= needle into the rear, left corner of the clamp).



Tacting forwards
This function is used to move forwards in sections in the seam pattern tact for tact. The seam cycle is sewn automatically, if the function is pressed longer.



Tacting backwards
This function is used to move backwards in sections in the seam pattern tact for tact. The seam cycle is sewn automatically, if the function is pressed longer.

10.04 Program interruption

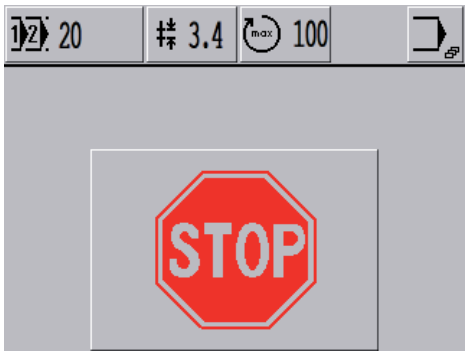

- A program sequence can be interrupted by pressing the "stop" key on the control panel.



If the machine is stopped in this way, the sewing unit and the clamp drive are not in their starting position!



- Continue program cycle



For a more detailed explanation of additional functions see **chapter 10.01 Sewing with individual programs**.

11 Input

In addition to the functions for entering or altering seam programs, in the input mode there are functions for displaying information, for program management, for machine configuration and settings (access codes etc.), as well as for supporting service and adjustment work.
In the input mode the machine start function is blocked to avoid an unintentional start-up of the machine.

11.01 Overview of the functions in the input mode

- Switch on the machine.
- Call up the input mode.

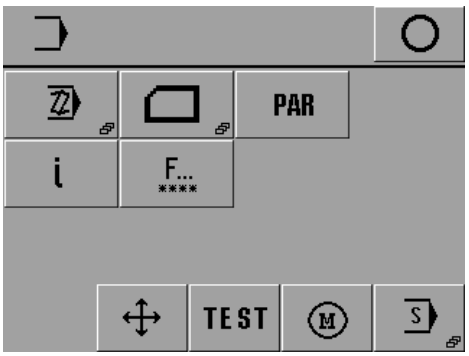

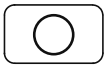

Conclude input
This function is used to conclude the input, and the machines changes to the sewing mode.

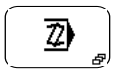

Seam program input
This function is used to call up the menu for entering or altering seam programs, see Chapter 11.02 Creating / altering seam programs.

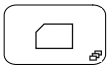

Program management
This function is used to manage the data from the machine memory and CD-Card, see Chapter 11.04 Program management.



Parameter settings
This function is used to call up the menu for altering parameter settings, see Chapter 13.08 Parameter settings.

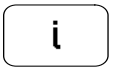

Info

This function opens a menu for displaying the following information:

- current software status of the machine
- current firmware status of the control panel
- current firmware status of the motor
- day piece counter
- operating hours meter
- production hours meter



The day piece counter can be reset with the "Clear" function.

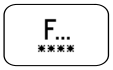

Rights of access

This function opens a menu for fixing the rights of access, see Chapter 11.05 Rights of access.

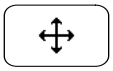

Stepping motors

This function opens a menu for moving the stepping motors.



Test clamp drive

This function opens a menu for calling and running a program for testing the reference points of the clamp drive.

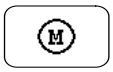

Sewing motor

This function opens a menu for testing and adjusting the sewing motor, see Chapter 12.07 Menu for the sewing motor.



Service menu

This function is used to call up the menu for selecting various service functions, see Chapter 13.06 Service menu.

11.02 Creating / altering seam programs

- Switch on the machine.



- Call up the input mode.

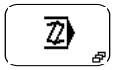

- Call up the seam program input function.

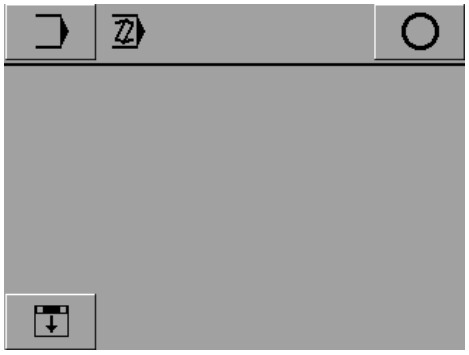



- Close the clamp.



- Confirm the operation.

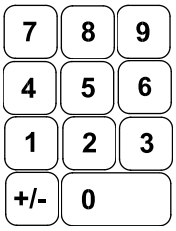

- Reinsert the desired program number or select the desired program.



- Confirm the seam number selection.

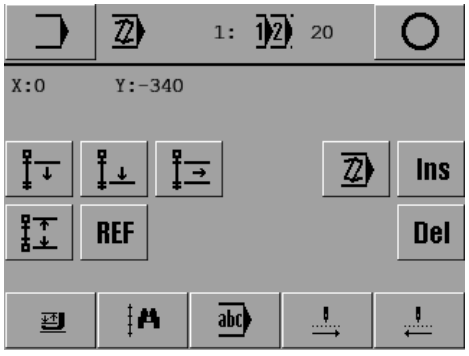

Description of the functions



Input menu
This function ends the programming operation and opens the basic input menu, see Chapter 11.01 Overview of the functions in the input mode.

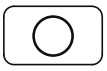

Conclude input
This function is used to conclude the input, and the machines changes to the sewing mode.



Mark block start
This function is used to define the start of a block, see Chapter 11.02.02 Block functions.



Mark block end
This function is used to define the end of a block, see Chapter 11.02.02 Block functions.



Block functions
This function opens a menu for entering block functions, see Chapter 11.02.02 Block functions.



Image functions
This function opens a menu for entering image functions, see Chapter 11.02.03 Image functions.



Coordinate reference points
This function is used to set the coordinates on the display at "0", in this way creating a new reference point.



Edit
After selecting this function, the current section can be edited.



Insert
This function is used to insert functions or blocks, see Chapter 11.02.04 Inserting functions.



Delete
This function is used to delete the current section.



Sewing foot up/down
This function is used to raise or lower the sewing foot. In addition the thread trapper is opened or closed.

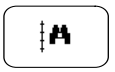

Search
With this function the sewing head is raised and the carriage can be moved near the desired seam pattern point with appropriate direction symbols. After the position has been confirmed, the machine moves towards the nearest point of the seam pattern.



Comment
This function opens a menu for entering a comment on the current program, see Chapter 11.02.01 Entering a comment.



Tacting forwards
This function is used to move forwards in sections in the seam pattern tact for tact. The seam cycle is sewn automatically, if the function is pressed longer.



Tacting backwards
This function is used to move backwards in sections in the seam pattern tact for tact. The seam cycle is sewn automatically, if the function is pressed longer.

11.02.01 Entering a comment

In the seam programming function, it is possible to add a comment to the seam program, after calling up the appropriate function. The comment is displayed as information about the corresponding seam program with the program selection function and the program management function.

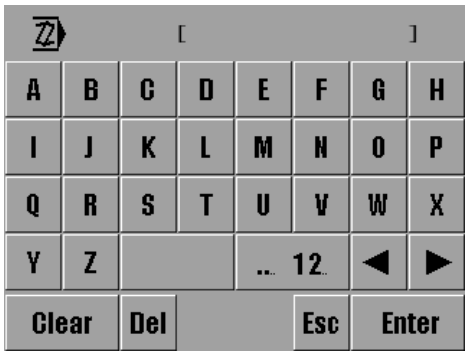

P R G
- Enter the desired text, e.g. "PRG".

..,.. 12..
- Change to number input.

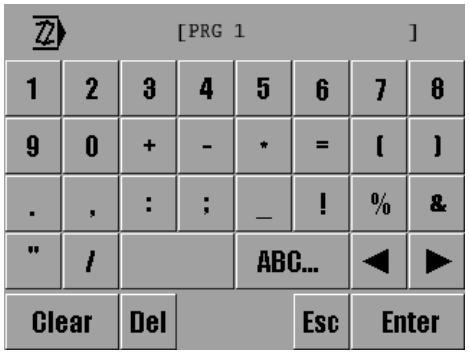

1
- Enter the desired number, e.g. "1".

Enter
- Conclude the comment input.

11.02.02 Block functions

- Switch on the machine.



- Call up the input mode.

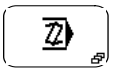

- Call up the seam program input function.

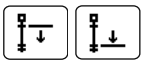

- Define block start and block end
  After a desired point in the program has been selected with the tacting through the program function, it is possible to define the block start with the "mark block start" function. The block marking must be concluded by defining a block end. To do so, tact through the program till reaching the desired point and then operate the "mark block end" function. When tacking through the program, the marked block can be recognised by the inverse symbol of the section number.



- Call up the block functions.

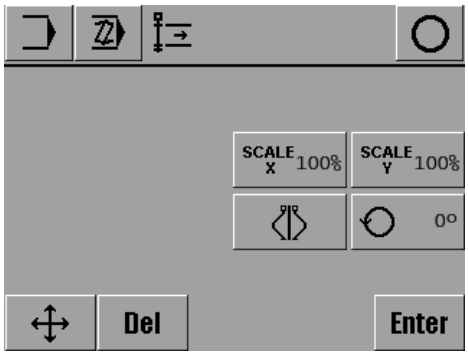

Description of the functions



Conclude input
This function is used to conclude the input, and the machine changes into the sewing mode.

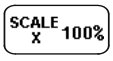

Enlargement factor X-axis
This function is used to enlarge or reduce the block in the X-direction.

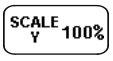

Enlargement factor Y-axis
This function is used to enlarge or reduce the block in the Y-direction.



Mirror
This function is used to mirror the block. Mirroring takes place on the straight line, which runs parallel to the Y-axis and through the block start point.

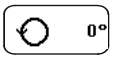

Turn
This function is used to turn the block. The block is turned around the block start point in an anti-clockwise direction.



Shift block

After this function has been selected, a new point must be approached with the clamp drive. With the enter function, this point is taken over and the block shifted.



Delete

When this function is selected, the block is deleted.



Enter

Conclude the block function input and carry out block manipulation.

11.02.03 Image functions

- Switch on the machine.



- Call up the input mode.

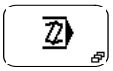

- Call up the seam program input function.



- Call up image functions.

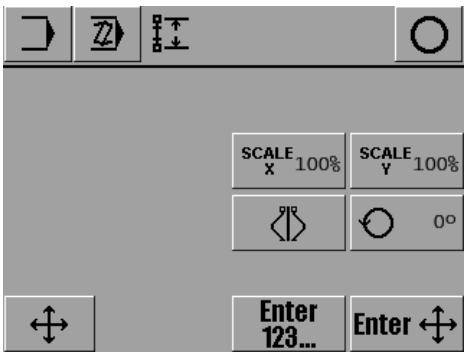

Description of the functions



Conclude input
This function is used to conclude the input, and the machine changes into the sewing mode.

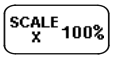

Enlargement factor X-axis
This function is used to enlarge or reduce the image in the X-direction. The operation is concluded by selecting the point of symmetry either with the number keys or with the control keys.

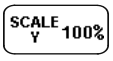

Enlargement factor Y-axis
This function is used to enlarge or reduce the image in the Y-direction. The operation is concluded by selecting the point of symmetry either with the number keys or with the control keys.



Mirror
This function is used to mirror the image. The operation is concluded by selecting the point of symmetry either with the number keys or with the control keys.

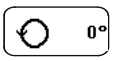

Turn
This function is used to turn the image. The image is turned in an anti-clockwise direction. The operation is concluded by selecting the point of symmetry either with the number keys or with the control keys.



Shift image
After this function has been selected, a new point must be approached with the clamp drive. With the enter function, this point is taken over and the image is shifted from the current position to the end of the program.



Point of symmetry using number keys

The point of symmetry is defined by entering the coordinates with number keys.

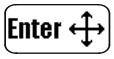

Point of symmetry using control keys

With this function the point of symmetry is approached (entered) by pressing the appropriate direction symbols.

11.02.04 Inserting functions

- Switch on the machine.



- Call up the input mode.

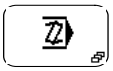

- Call up the seam program input function.



- Call up "insert" functions.

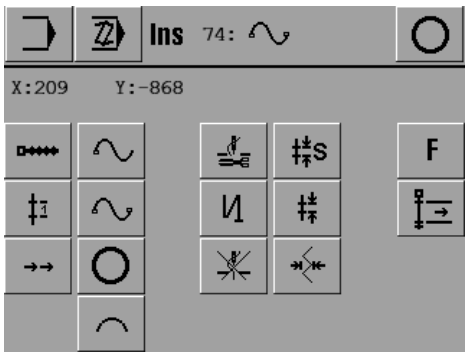

Description of the functions



Conclude input (in status bar)
This function is used to conclude the input, and the machine changes into the sewing mode.



Straight line
A straight line is a direct connection between two points.
To enter a straight line, a stitch length must be defined.



Single stitch
A single stitch or feed motion is entered without taking the stitch length into consideration. The single stitch or feed motion can be max. 12 mm.



Fast motion
The fast motion function is used for the quick motion of the clamp drive. Both axes are moved independently from each other to the end point as quickly as possible. The resulting distance moved is therefore not a straight line (watch out for obstacles on the clamp). If the path has to be exact, it is necessary to work with a straight line or curve without start sewing.



Curve check points
It is possible to enter any number of check points. The control unit calculates the course of the curve, taking the stitch length into consideration. Check points do not necessarily have to be end points. A stitch length must be defined. The greater the number of check points entered, the more exact the course of the curve.



Curve end
This function changes a curve check point into a curve end point.



Circle

To enter a circle, three points are necessary. The first point is automatically the starting points. The two missing points still have to be entered. A stitch length must be defined.



Circular arc

For the circular arc the same applies as for the circle, whereby the last point defines the end of the circular arc.



Start sewing

This function is used to start sewing. All following sections are sewn until the thread trimming function is selected.

or



Thread trimming

The thread is cut. The start sewing function must have been activated previously.

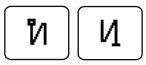

Bartacks

These functions are used to call up the menu for entering start and end bartacks. The menu is used to enter the number of forward and reverse stitches as well as the bartack stitch length.



Sewing off

This function is used to stop the sewing head without thread trimming. The subsequent feed motions are carried out without a sewing function. To restart sewing, the start sewing function must be programmed.



Standard stitch length

This function is used to define the stitch length, which will be used predominantly in the program. During sewing the standard stitch will be displayed in the status bar and can be altered on the machine with the stitch alteration function, without changing into the programming mode.



Stitch length

A stitch length is defined for a certain seam sector.

This stitch length is not displayed in the status bar during sewing and can only be altered in the programming mode.



Stitch width

This function carries out a zig-zag motion with the clamp drive on the base line. Here the stitch length indicates the feed motion along the base line from needle penetration to needle penetration and must be selected accordingly. The stitch width is carried out vertically to the base line. The position of the zig-zag to the base line must also be defined. If the stitch width function is to be switched off, the width must be entered as 0.0.



Other functions

This function is used for the selection of more functions, see Chapter 11.02.05 Other functions.



Insert block

This function is used to insert a marked block after the current position.

11.02.05 Other functions

- Switch on the machine.



- Call up the input mode.

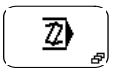

- Call up the seam program input function.



- Call up "insert" functions.



- Call up other functions.

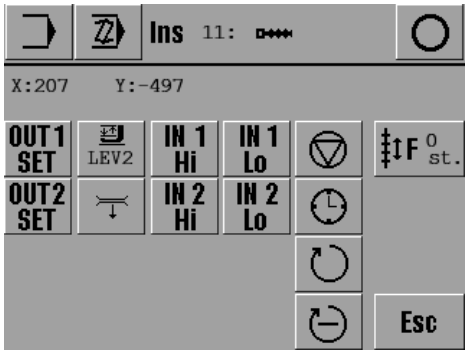

Description of the functions



Conclude input
This function is used to conclude the input, and the machines changes to the sewing mode.



Programmable outputs
The corresponding outputs (1 to 4) are activated with the menu.



Second vibrating presser level
A sector can be entered, in which the 2nd level of the vibrating presser is activated.

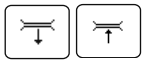

Secondary thread tension (depending on machine status)
This function is used to open or close the secondary thread tension.



Wait for input (inputs 1 to 2)
The processing of the program is stopped until the appropriate input (1 to 2) has reached the selected level.



Programmed stop
A stop is programmed in the program.
Processing is continued by calling up the "start" function.



Wait for time

The processing of the program is stopped until the programmed time has elapsed.



Speed

A speed is entered permanently in the program.



Reduced speed (depending on machine status)

This function is used to sew at a reduced speed or to switch off the reduced speed.



Adjustment parameters

This function is used to adjust the activation or deactivation of various functions. The number of stitches is entered for activating or deactivating the corresponding function sooner or later.



Esc

Conclude input without taking over the inputs.

11.03 An example for programming a seam

Below is an example describing how to enter a seam program.
A seam sketch serves as a model. This is put into the gauge frame and digitised with a needle.

A prerequisite for the use of the seam program is that it matches the clamp

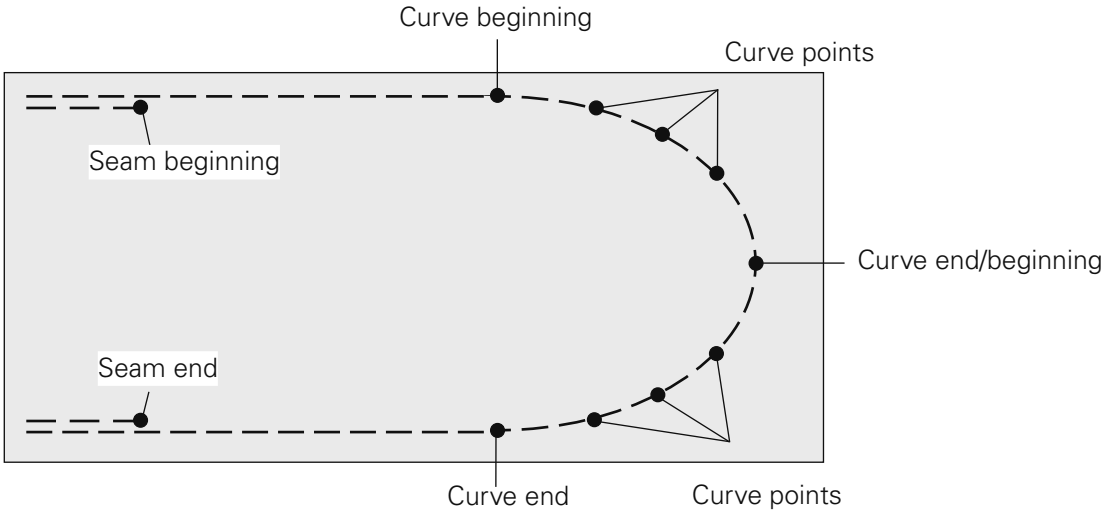

- Switch on the machine.



- Call up the input mode.

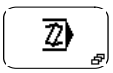

- Call up the seam program input function.

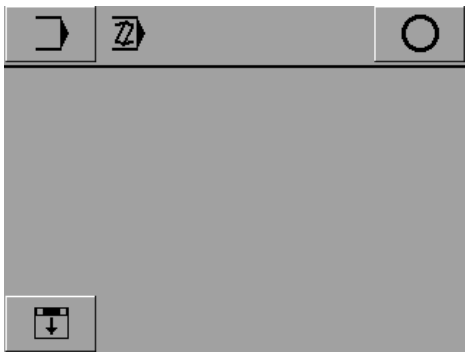



- Close the clamp.

Enter

- Confirm the operation.

7 8 9
4 5 6
1 2 3
+/- 0

- Enter desired program number (e.g. "20") to create a new seam program.

Enter

- Confirm program number selection

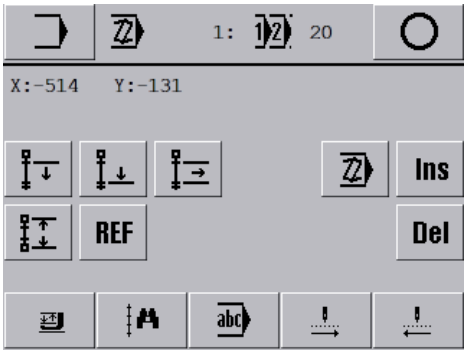

- Tact forwards.

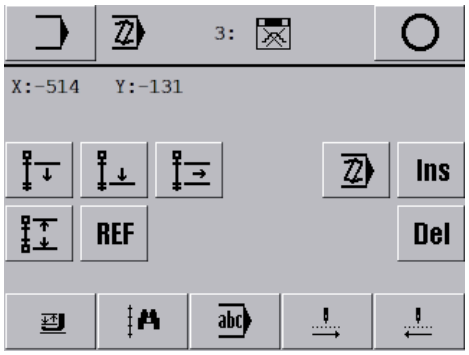

Ins

- Call up "Insert" function.

→→

- Call up rapid motion to starting point/loading point.

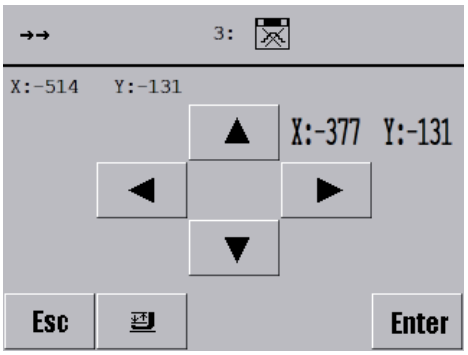

- Move to the starting point with the corresponding direction symbols, and check on the drawing with the needle.

Enter

- Save position.

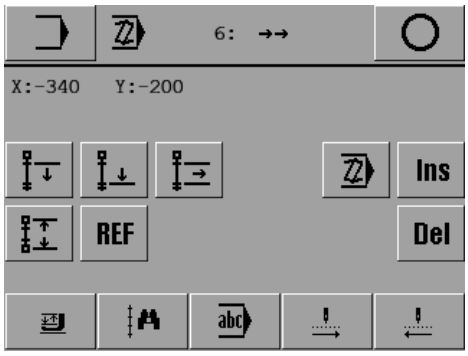



- Tact forwards.

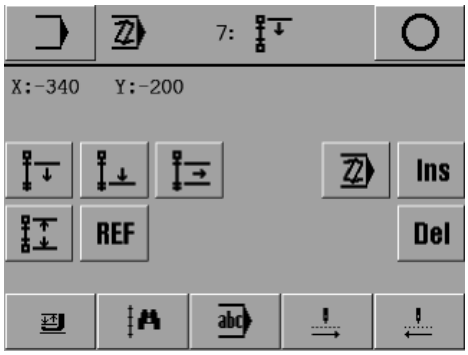



- Call up the "insert" function.

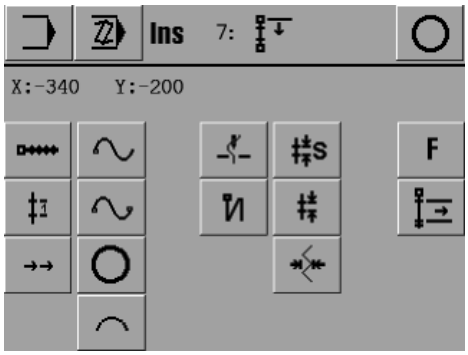



- Call up the "start sewing" function.

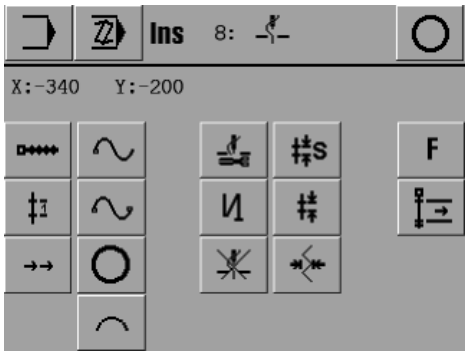



- Call up the "standard stitch length" function.

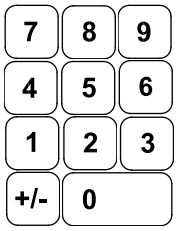

- Enter the value for the standard stitch length, e.g. 3.40 mm.

Enter

- Confirm input.

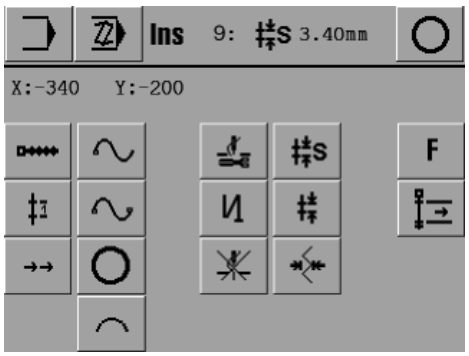



- Call up the "straight line" function to insert a straight line.
- Move to the end point of the straight line with the corresponding direction symbols.

Enter

- Save the setting.

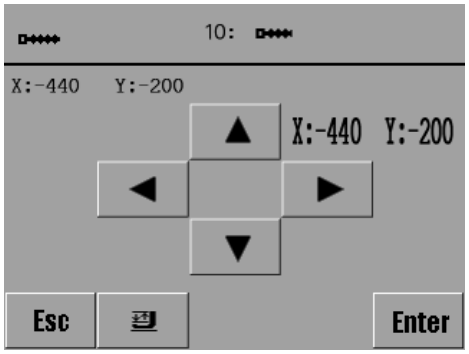

- Move to the next straight line end point with the corresponding direction symbols.

Enter

- Save the setting.

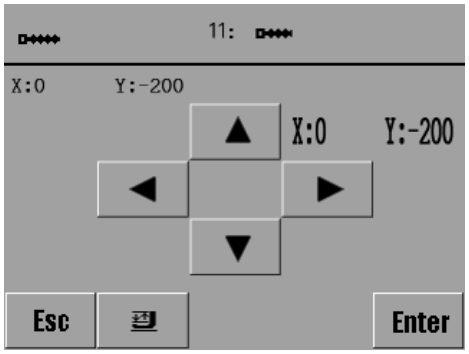

Esc

- Conclude straight line input.

- Call up the "curve point" function.

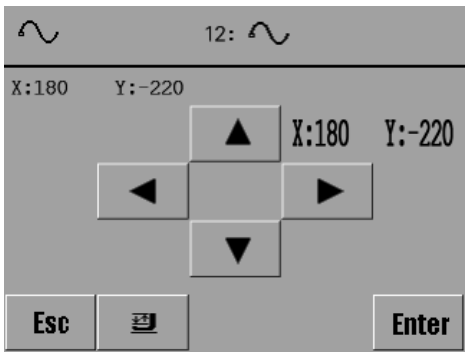

- Move to the first curve point with the corresponding direction symbols.

Enter

- Save the setting.
- Move to the second, third and fourth curve points with the corresponding direction symbols.

Enter

- Save each setting.

Esc

- Conclude curve points input.

- Call up "curve end" function (fourth Bezier curve is defined as curve end).

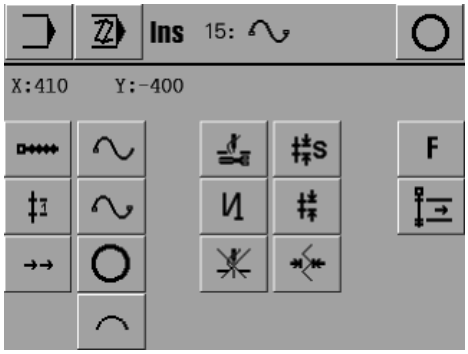

- Call up the "curve point" function.
- Move to the next curve point with the corresponding direction symbols.

Enter

- Save each setting.

Esc ● Conclude curve points input.

● Call up "curve end" function.

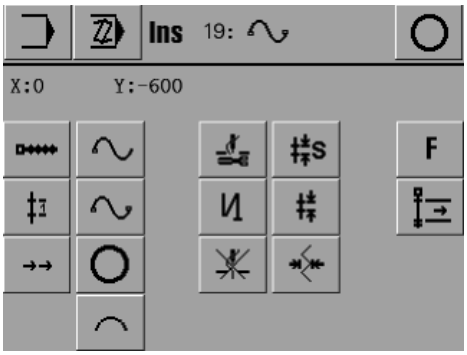

● Call up the "straight line" function to insert a straight line.

● Move to the end points of the straight line with the corresponding direction symbols.

Enter ● Save each setting.

Esc ● Conclude straight line input.

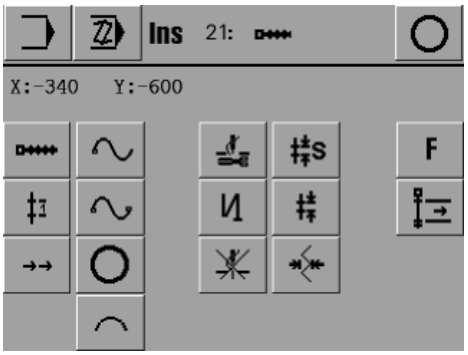

● Switch on the thread trimming function.

● Conclude the seam program input (function in status bar).

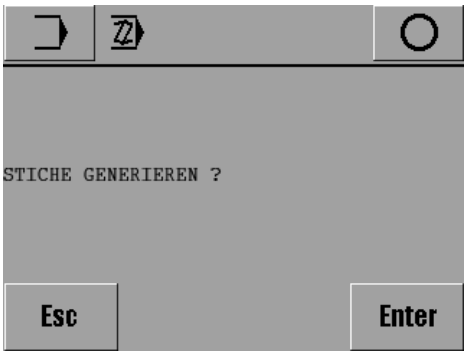

To be able to sew with the newly-created or edited seam program, the stitch generation must be carried out. Incomplete or incorrect programs also can be ended with the "Esc" function without stitch generation. In this case, when the seam program is called up in the sewing mode, an appropriate error message will appear.

Enter

- Carry out the stitch generation.

- After entering the appropriate program number, the created seam program can be selected and processed.

To begin with tact through a newly-created or corrected seam program on the machine, to make sure that it matches the clamp!

11.04 Program management

The program management function is used to manage seam programs as well as configuration and machine data. Files can be selected from the machine memory or from a SD-Card and be copied or deleted.

- Switch on the machine.



- Call up the input mode.

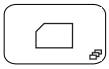

- Call up the program management function.

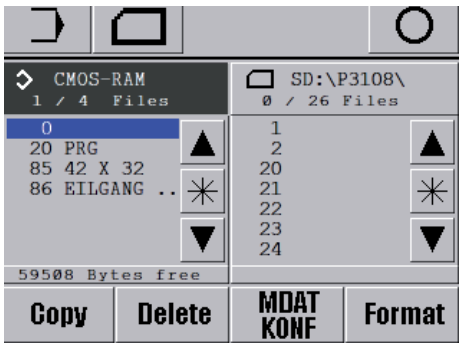

Both data carriers with the corresponding files appear on the display:
- Machine memory (CMOS-RAM) is currently selected
- SD-Card ( ) is currently inserted

The data carrier is selected by touching the appropriate box, and the content of the appropriate data carrier is also updated. The selected drive is shown as a invers symbol, the selected files are shown blue.



Seam programs are filed at a different level to that for the configuration and machine data, in order to avoid the configuration and machine data being processed by mistake.

Description of the functions



Input mode
This function is used to changed to the initial state of the input mode.



Update drives
This function is used to update (upload)the drives.



Conclude input
This function is used to conclude the input, and the machines changes to the sewing mode.

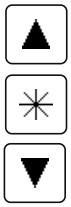

Data selection
With these functions the desired files are marked in the current drive. Individual files are selected with the arrow keys. In combination with the lock key (*) several files can be selected at one time with the arrow keys.



Copy
This function is used to copy the files selected from the current data carrier onto the second data carrier.



Delete
This function is used to delete the selected files.



MDAD/KONF
This function is used to call up the level for the configuration and machine data. The current settings and the machine configuration are stored in the file "MD" . In this way the machine data can be copied on to a CD-Card as a backup, or several machines with the same designation can be configured quickly by reading the machine data.



Format
This function carries out the formatting of the inserted SD card for the machine.



During formatting, the directory "P3108" is created. S

11.05 Rights of access

The functions, which can be called up with the control panel, are classified by code numbers and can be protected from unauthorised access. For this purpose, the control unit differentiates between 3 user groups (user 1, 2 and 3), all of which can be assigned a corresponding PIN. If a function is selected, for which the user does not have an authorisation, the user is requested to enter a PIN. After the appropriate PIN has been entered, the selected function is carried out.

- Switch on the machine.
- Call up the input mode.

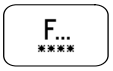

- Call up the menu for entering rights of access.

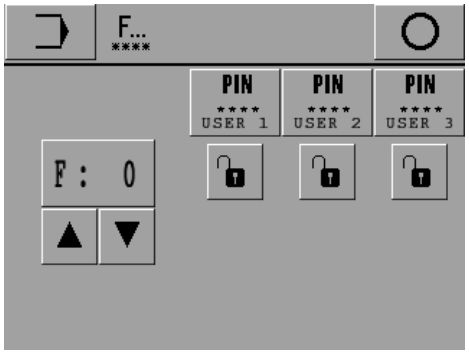

Description of the functions



Input mode
This function is used to change from the initial state to the input mode.



Conclude input
This function is used to conclude the input, and the machines changes to the sewing mode.



Entering the PIN
With this function an individual PIN for each user can be stipulated.

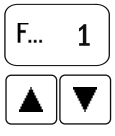

Function selection
These functions are used to select the code number for the function to be locked or released.



Locking/releasing
These functions are used to lock or release the function for the appropriate user.

Allocation of code numbers

Function	Symbol	Code number	Standard setting		
			User 1	User 2	User 3
Program number selection		0			
Enter stitch length		1			
Enter speed		2			
Bobbin winding		26			
Input		3			
Create program		4			
Program management		5			
Parameter settings	PAR	6			
Parameter group 100 General settings	-	7*			
Parameter group 200 Seam parameters	-	8*			
Parameter group 300 Sewing motor positions	-	9*			
Parameter group 500 Meters	-	11*			
Info	i	-			
Reset daily piece counter		17			
Reset bobbin thread stitch counter		18			
Reset operating hours meter		19			
Reset production hours meter		20			
Disengage/engage functions		22			
Moving stepping motors		25			
Carriage test	TEST	28			
Sewing motor functions		29			
Service		23			

Function	Symbol	Code number	Standard setting		
			User 1	User 2	User 3
Carry out a cold start		24			
Key tone		27			
Set zero points		30			

*These functions cannot be edited.

12 Care and maintenance

12.01 Servicing and maintenance intervals

Clean the entire machine	once a week
Clean the hook compartment	Daily, several times if in continuous use
Check the oil level	Daily, before starting the machine
Check/adjust the air pressure	Daily, before starting the machine
Clean the filter of the air filter/lubricator	As required

These maintenance intervals are calculated for the average running time of a single shift operation. If the machine is operated more than this, shorter intervals are recommended.

12.02 Cleaning the machine

The cleaning cycle required for the machine depends on following factors:

- Single or several shift operation
- Amount of dust resulting from the workpiece

It is therefore only possible to stipulate the best possible cleaning instructions for each individual case.



To avoid breakdowns, the following cleaning work is recommended for single shift operation:

- Clean hook compartment and needle area of sewing head several times daily.
- Clean the entire machine at least once a week.

To do so:

- Switch on the machine.
- Call up the threading aid function. Sewing start is disengaged.
- Clean the machine.
- Move the machine to its basic position.

12.03 Lubricating

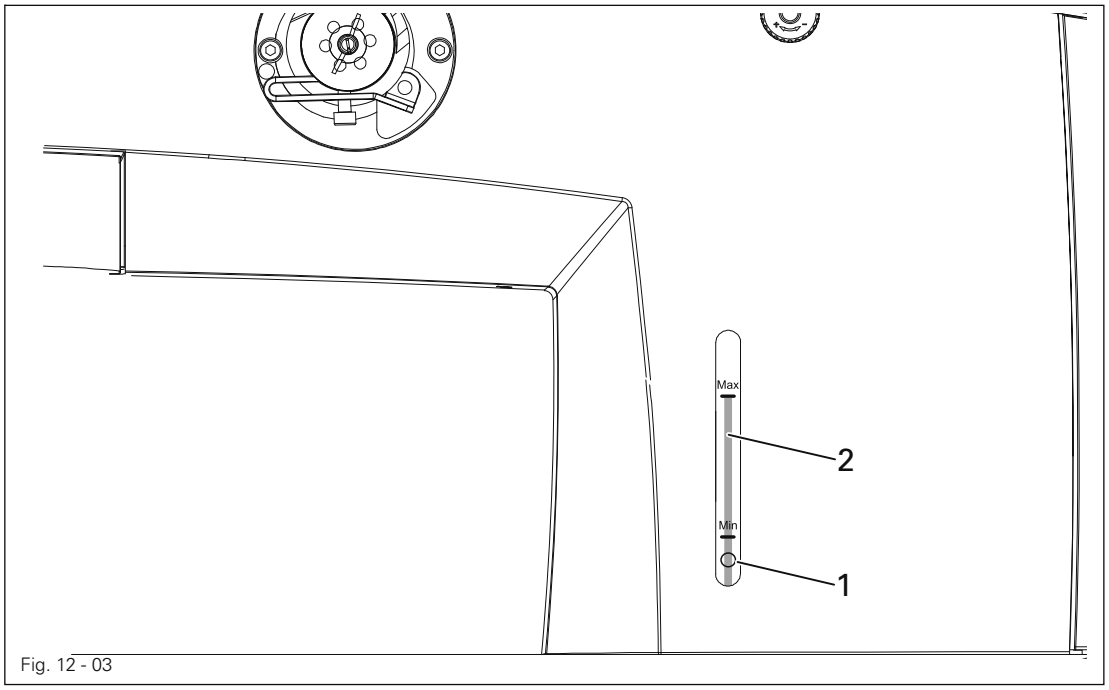

Fig. 12 - 03

Before commissioning the machine, fill in oil through hole **1** until the oil level indicator **2** is at the "MAX" marking.

Check the oil level daily before starting the machine!
The level of the oil in indicator **2** must not sink below the "**MIN**" marking and not exceed the "**MAX**" marking.
If required, fill oil into the tank through hole **1**.

Only use oil with a medium viscosity of **22.0 mm²/s** at **40° C** and a density of **0.865 g/cm³** at **15°C**!

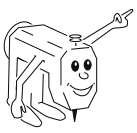

We recommend PFAFF sewing-machine oil, part No. **280-1-120 144**.

12.04 Lubricate clamp drive

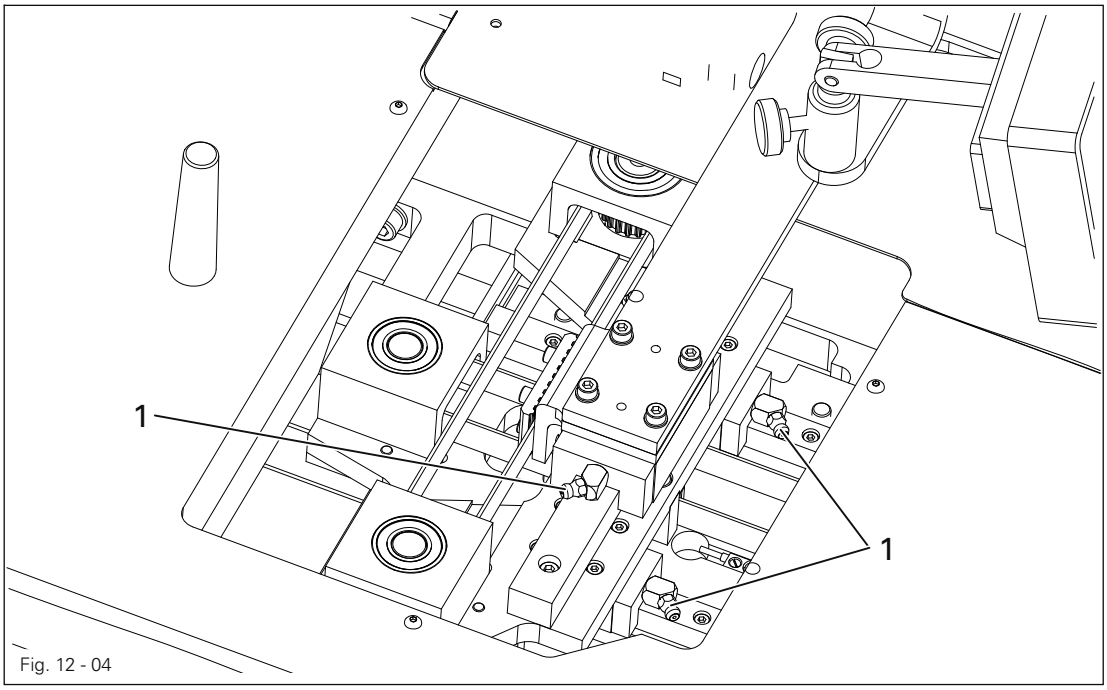

Fig. 12 - 04

Switch off the machine and take measures to prevent it being switched on again!

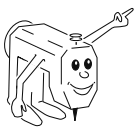

Only use Isoflex **Topas L32** high-performance grease, part no. **280-1-120 210**.

- Unscrew the cover of the jig drive.
- With the appropriate lubricating nipple **1**, using a grease gun, lubricate the guide units every **3** months for single shift operation, and once a month for double shift operation.
- Screw cover back on.

12.05 Checking/regulating the air pressure

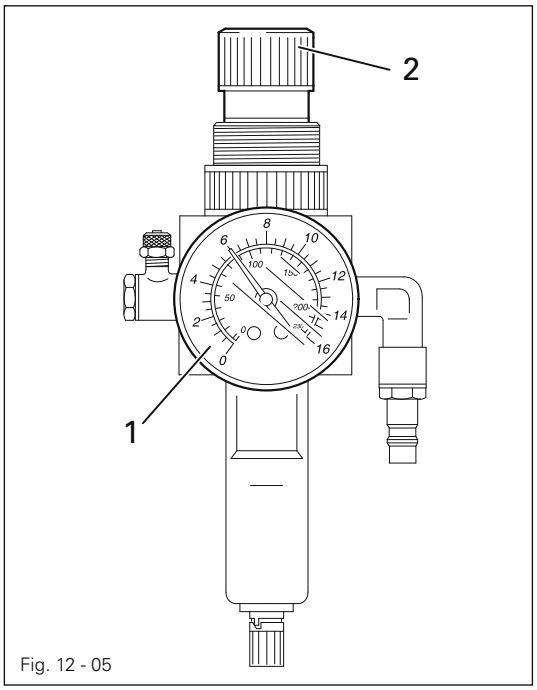

Fig. 12 - 05

- Check the air pressure on gauge **1** every time before operation.
- Gauge **1** must show a pressure of **6** bar.
- Regulate this pressure if required.
- To do so, pull knob **2** up and turn it accordingly.

12.06 Emptying/cleaning the water bowl of the air filter/regulator

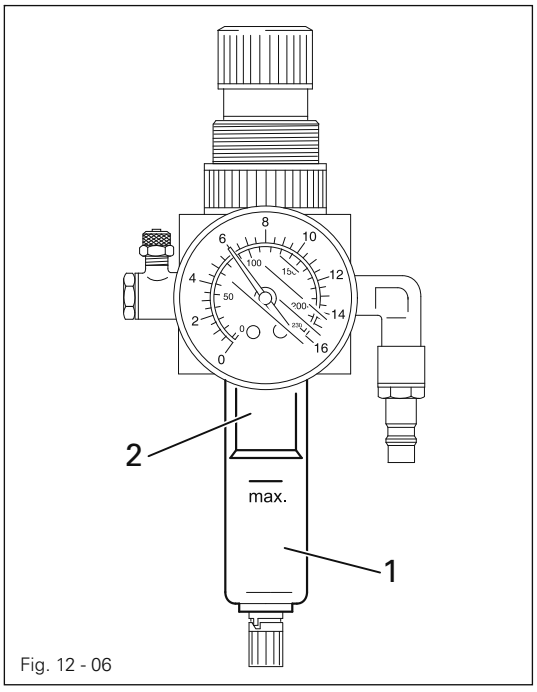

Fig. 12 - 06



Switch off the machine.
Disconnect the air hose at the air filter/regulating unit.

Emptying the water bowl

- Water bowl **1** empties itself automatically when the air hose is disconnected from the air filter/regulator.

Cleaning the filter

- Unscrew water bowl **1** and take out filter **2**.
- Clean the filter with compressed air or with isopropyl-alcohol, part number **95-665735-91**.
- Screw in filter **2** and screw on water bowl **1**.

13 Adjustment



Please observe all notes from Chapter **1 Safety** of the instruction manual!
In particular care must be taken to see that all protective devices are refitted properly after adjustment, see Chapter **1.06 Danger warnings** of the instruction manual!



If not otherwise stated, the machine must be disconnected from the electrical power supply. Danger of injury due to unintentional starting of the machine!

13.01 Notes on adjustment

All following adjustments are based on a fully assembled machine and may only be carried out by expert staff trained for this purpose.
Machine covers, which have to be removed and replaced to carry out checks and adjustments, are not mentioned in the text.
The order of the following chapters corresponds to the most logical work sequence for machines which have to be completely adjusted. If only specific individual work steps are carried out, both the preceding and following chapters must be observed.
Screws, nuts indicated in brackets ( ) are fastenings for machine parts, which must be loosened before adjustment and tightened again afterwards.

13.02 Tools, gauges and other accessories for adjusting

- Screwdrivers with blade width from **2** to **10 mm**
- Spanners (wrenches) with jaw width from **7** to **14 mm**
- **1** set Allen keys from **1.5** to **6 mm**
- **1** clamp adjusting gauge Order No. **95-295 500-05**
- Metal rule (part No. **08-880 218-00**)
- Sewing thread and test materials

13.03 Abbreviations

t.d.c. = top dead centre
b.d.c. = bottom dead centre

13.04 Explanation of the symbols

In this adjustment manual, symbols emphasize operations to be carried out or important information. The symbols used have the following meaning:



Note, information

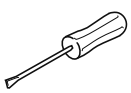

Service, repair, adjustment, maintenance
(work to be carried out by qualified staff only)

13.05 Adjusting the sewing head

13.05.01 Basic position of the balance wheel (adjustment aid)

Requirement
When the needle bar is positioned at t.d.c., the marking "**0**" on the scale should be level with the top edge of the belt guard (see arrow).

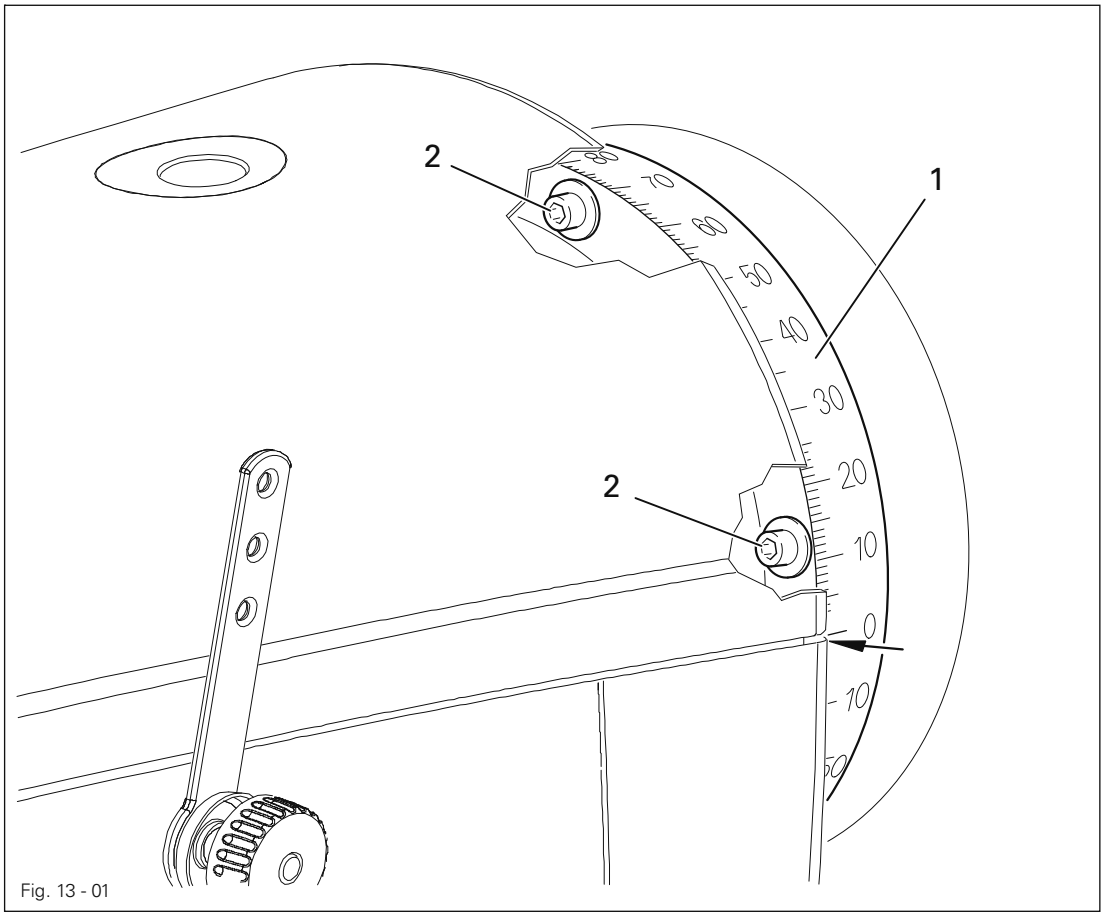

Fig. 13 - 01

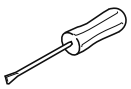
Adjust the scale dial **1** (four screws **2**) in accordance with the **requirement**.

13.05.02 Preliminary adjustment of the needle height

Requirement
When the needle bar is positioned at t.d.c. (balance wheel position **0°**), the clearance between the needle point and the cover plate **6** should be **27 mm**.

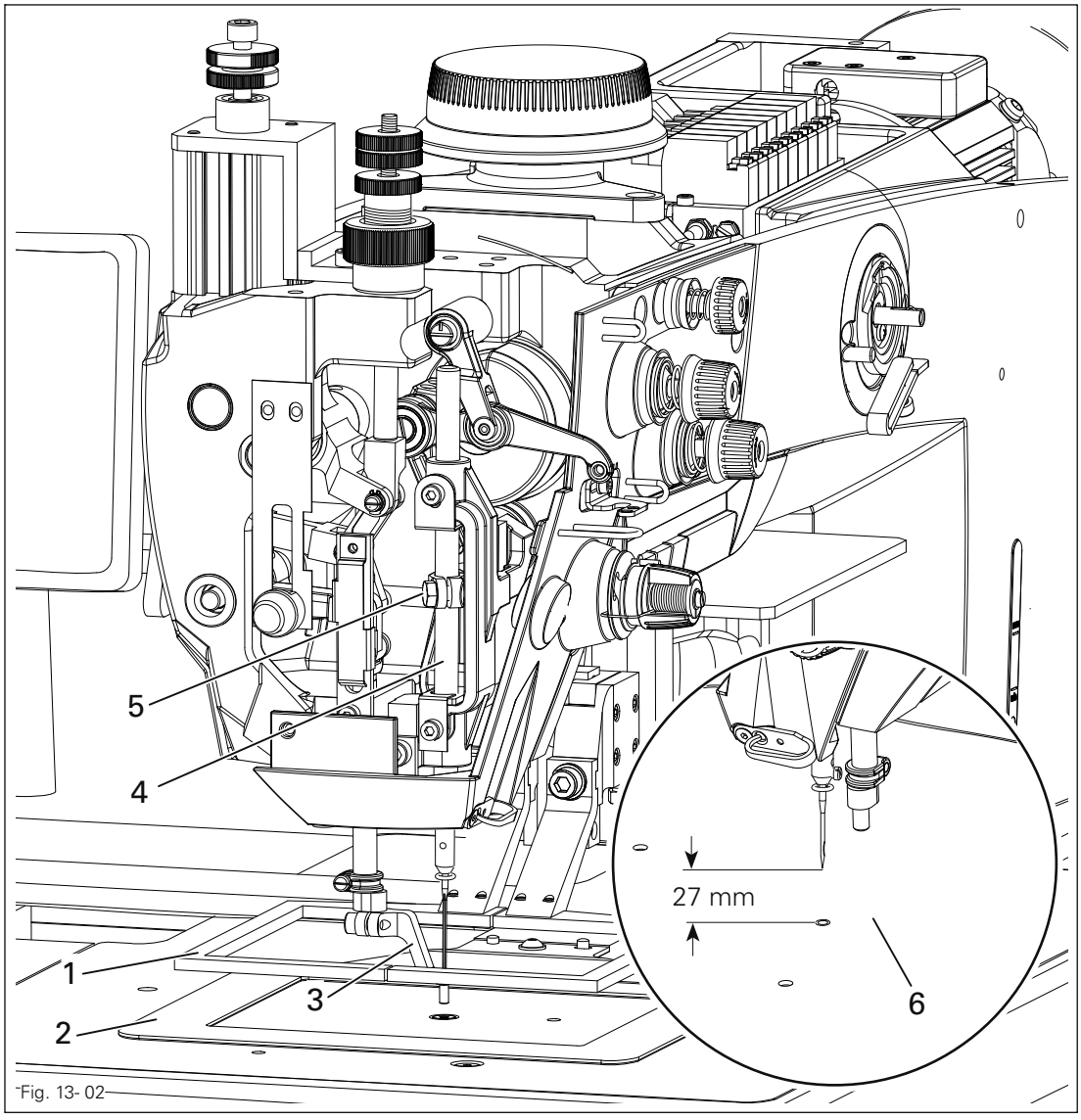

Fig. 13- 02

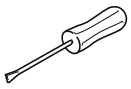

- Unscrew clamp **1**, plate **2** and hopping foot **3**.
- Without turning it, re-position needle bar **4** (screw **5**) in accordance with the **requirement**.

13.05.03 Needle rise, hook clearance and needle height

Requirement

In needle bar position, **2.0** mm after b.d.c. (balance wheel position **202°**):

1. The hook point **5** should be positioned at "needle centre" with a hook-to-needle clearance of **0.05 – 0.10 mm**.
2. The top of the needle eye should be positioned **0.8 mm** below hook point **5**.

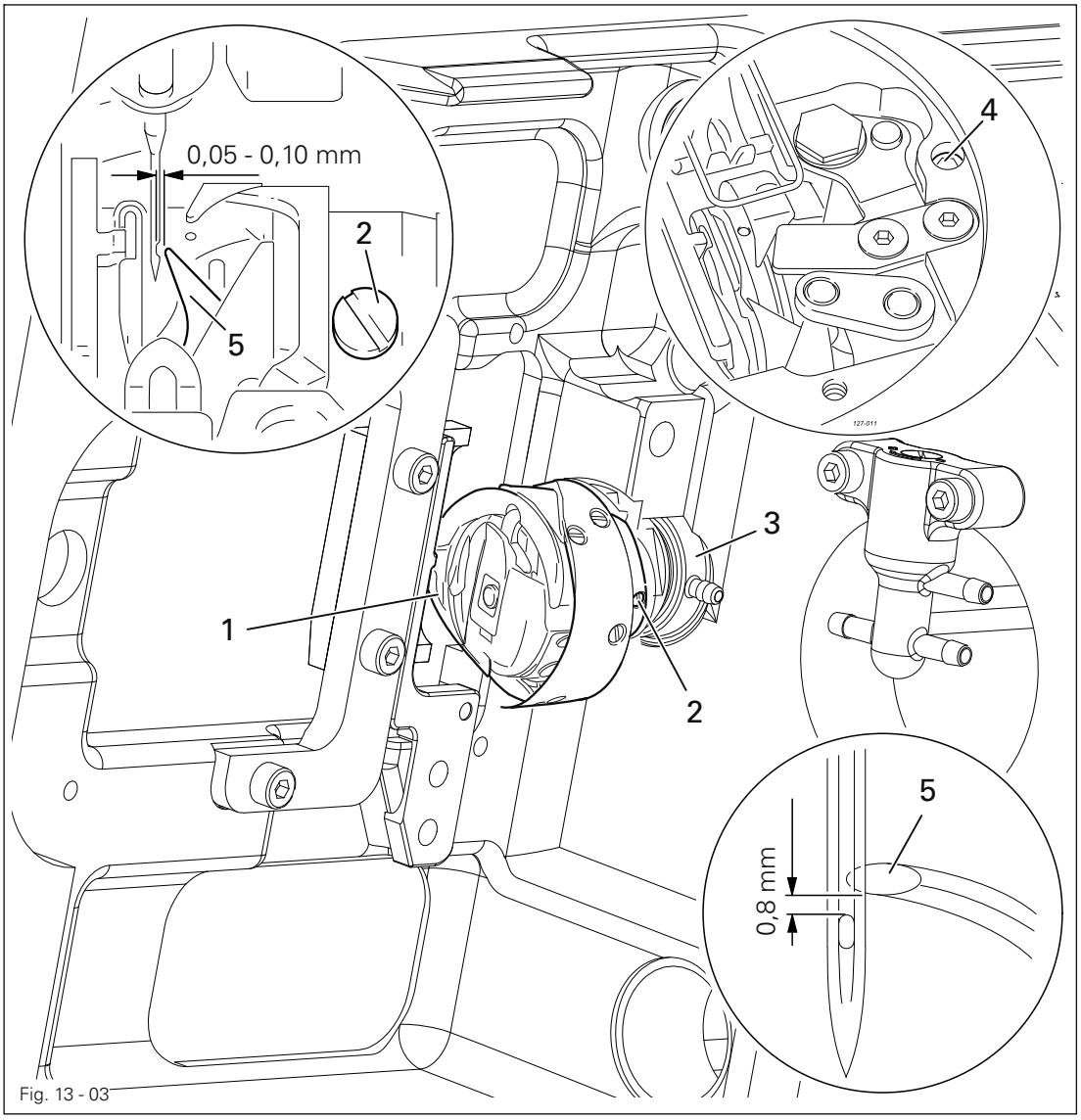

Fig. 13 - 03

- Maschine mittels Handrad in Schlingenhubstellung bringen.
- Adjust hook **1** (screws **2**) in accordance with **requirement 1**.
- Bring oil distributor ring **3** (screw **4**) into contact with hook **1**.
- Without turning it, re-position the needle bar in accordance with the **requirement 2**.

13.05.04 Reversing point of hopping foot

Requirement
When the needle bar is in b.d.c. hopping foot **3** should have reached its bottom point of reversal.

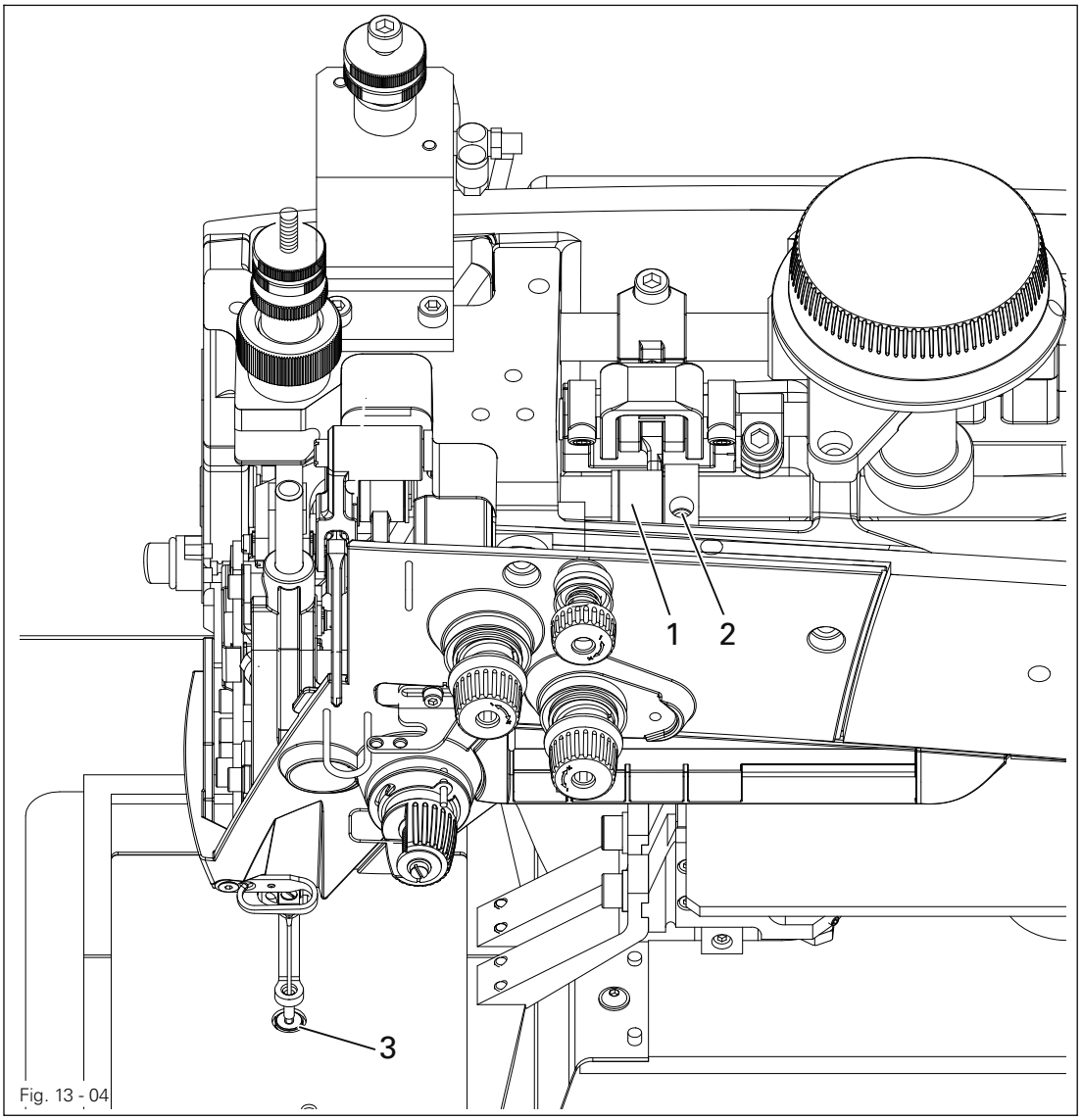

Fig. 13 - 04

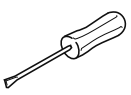

- Turn crank **1** (screws **2**) according to requirement.

13.05.05 Hopping foot lift

Requirement

The hopping foot should

1. make no movement when setting wheel **5** is set to "**0**",
2. rise **5** mm when setting wheel **5** is set to "**5**".

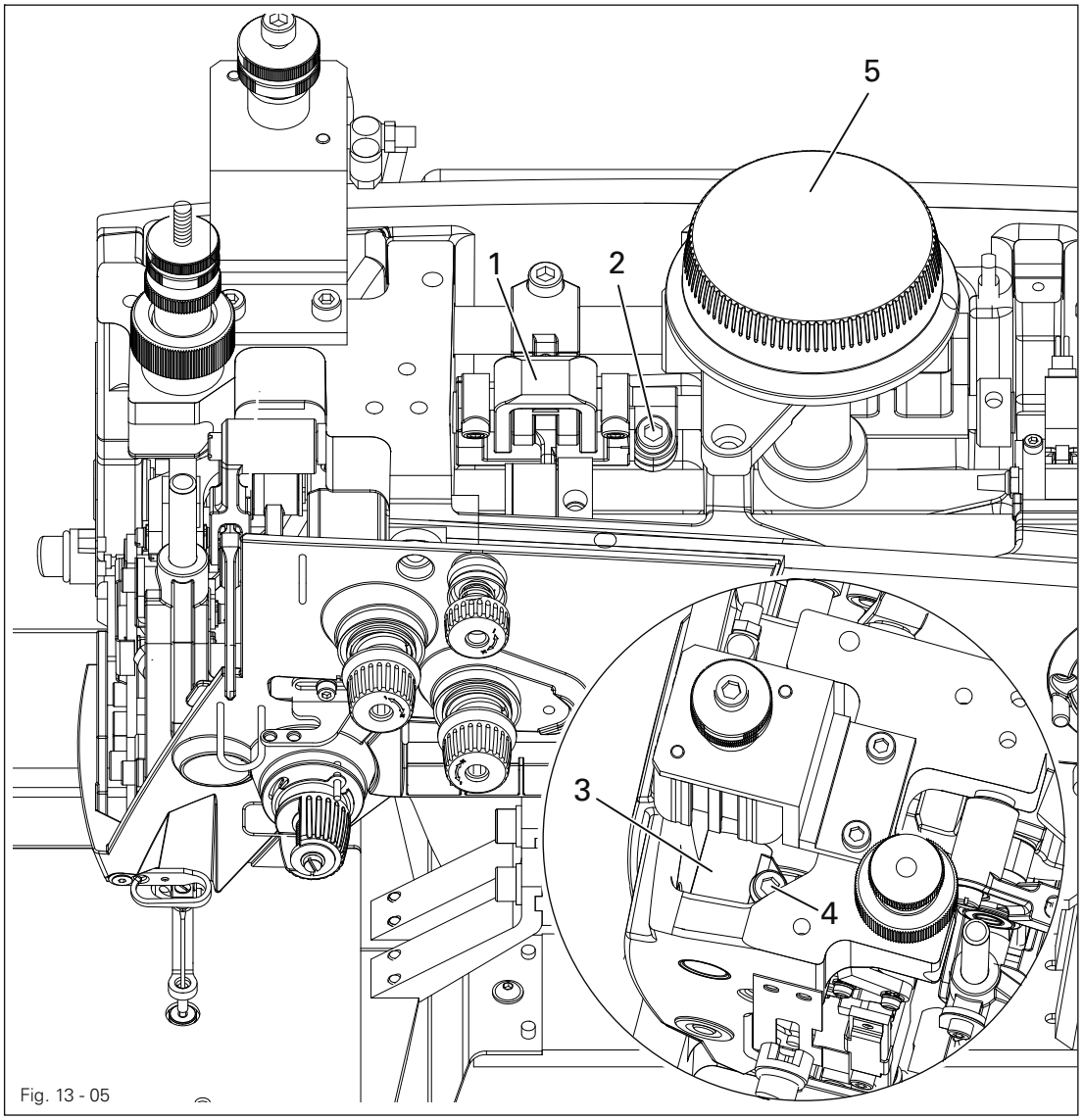

Fig. 13 - 05

- Turn crank **1** (screw **2**) according to requirement **1**
- Adjust crank **3** (screw **4**) according to requirement **2**.

13.05.06 Adjusting hopping foot pressure

Requirement
The hopping foot pressure should be adjusted so that the hopping foot movement is also ensured at top speed.

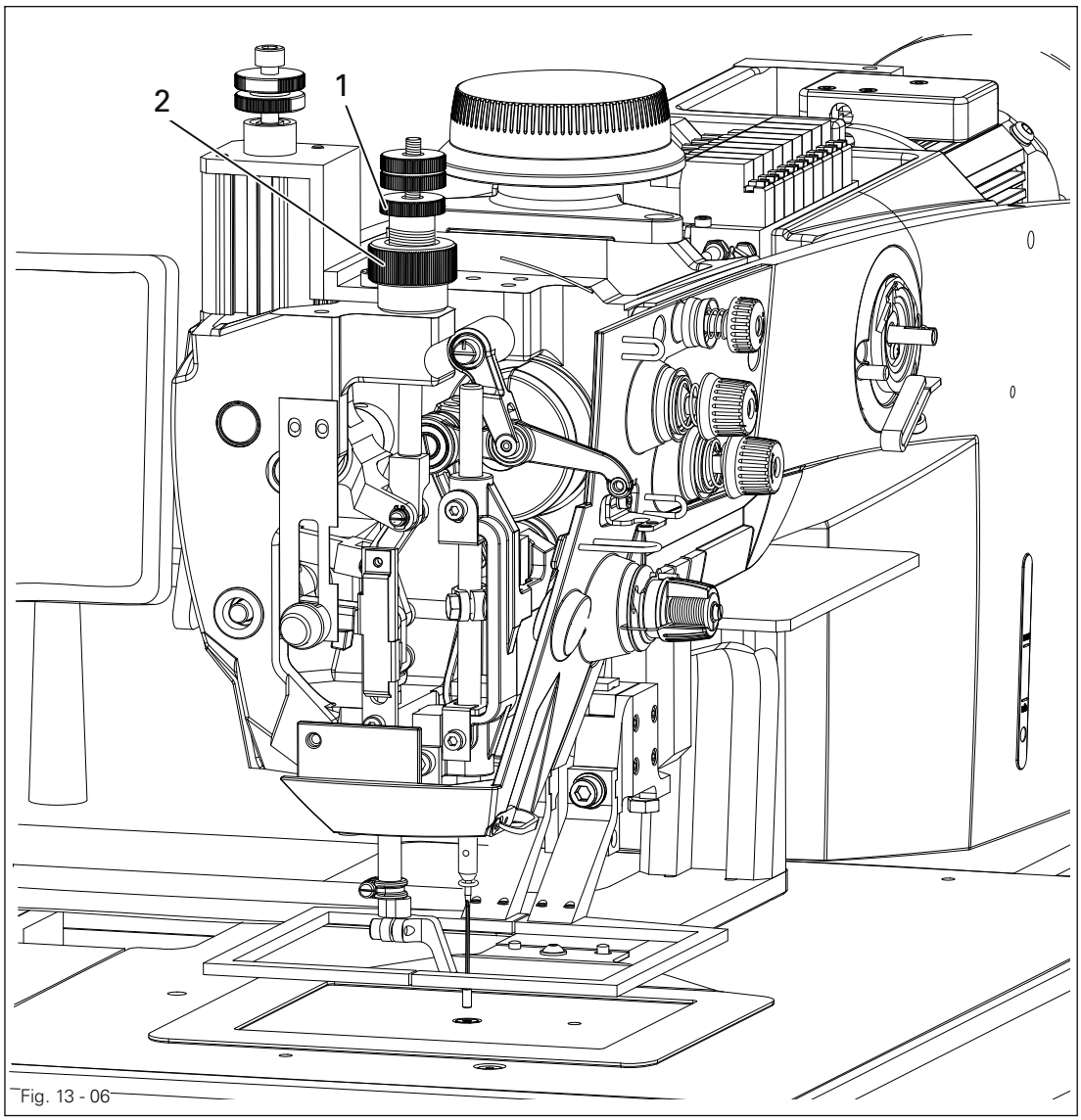

Fig. 13 - 06

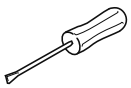

- Turn knurled nut **1** (lock nut **2**) according to the requirement.



The hopping foot height must be readjusted (see Chapter **13.05**.07) after changing the hopping foot pressure.

13.05.07 Adjusting hopping foot height

Requirement
When at its lowest point of reversal, hopping foot **3** should be positioned above cover plate **4** at a distance corresponding to the material thickness.

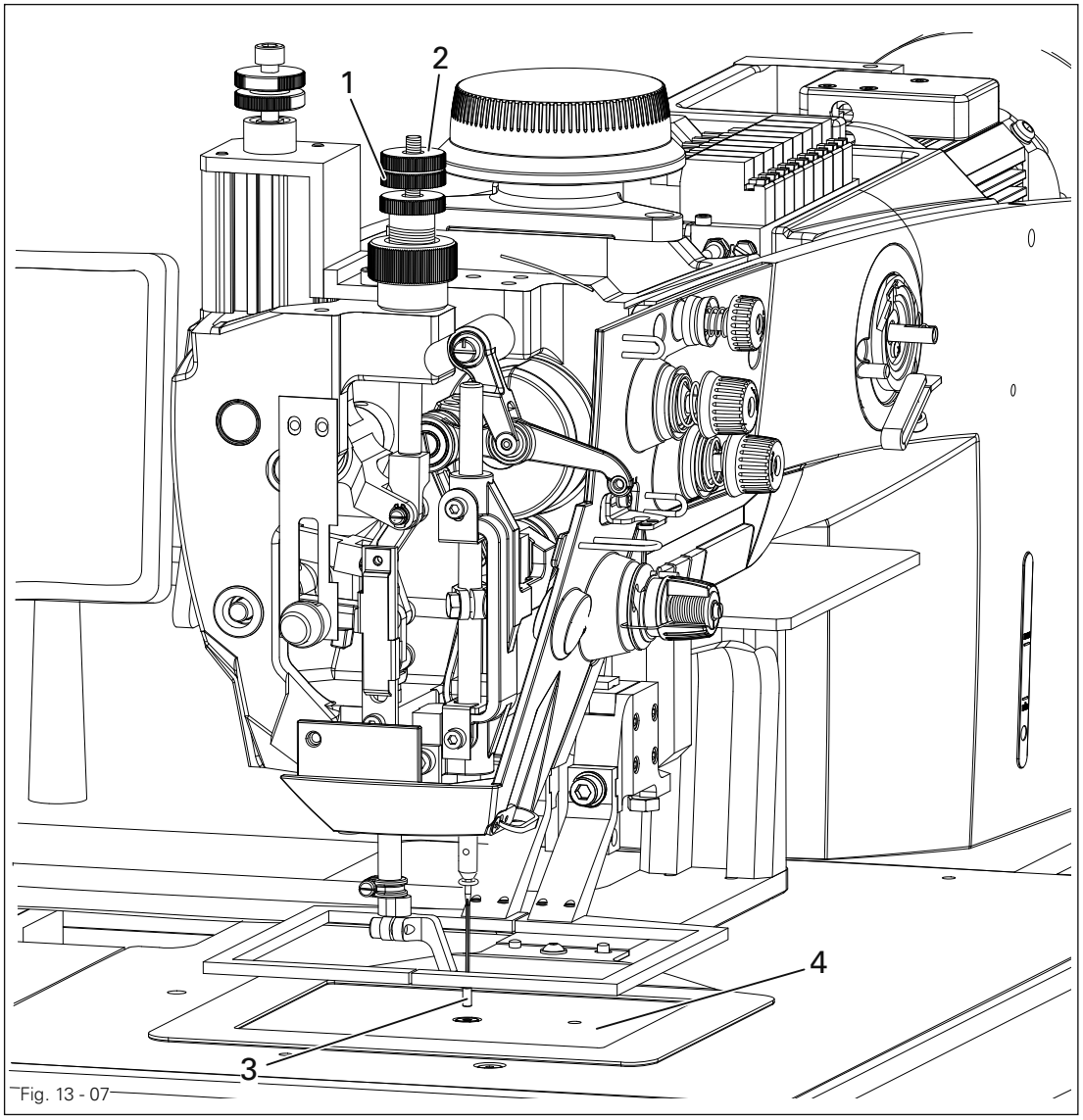

Fig. 13 - 07

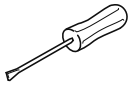

- Turn knurled thumb screw **1** (lock nut **2**) according to the requirement.

13.05.08 Regulating the level of the hopping foot

Requirement

1. When executing programmed level regulation, the second foot height should be adjusted so that hopping foot **5** is positioned above cover plate **6** at a distance corresponding to the sewing material thickness.
2. When the needle bar is in b.d.c. and level regulation is raised to maximum, the needle bar must not contact with hopping foot **5**..

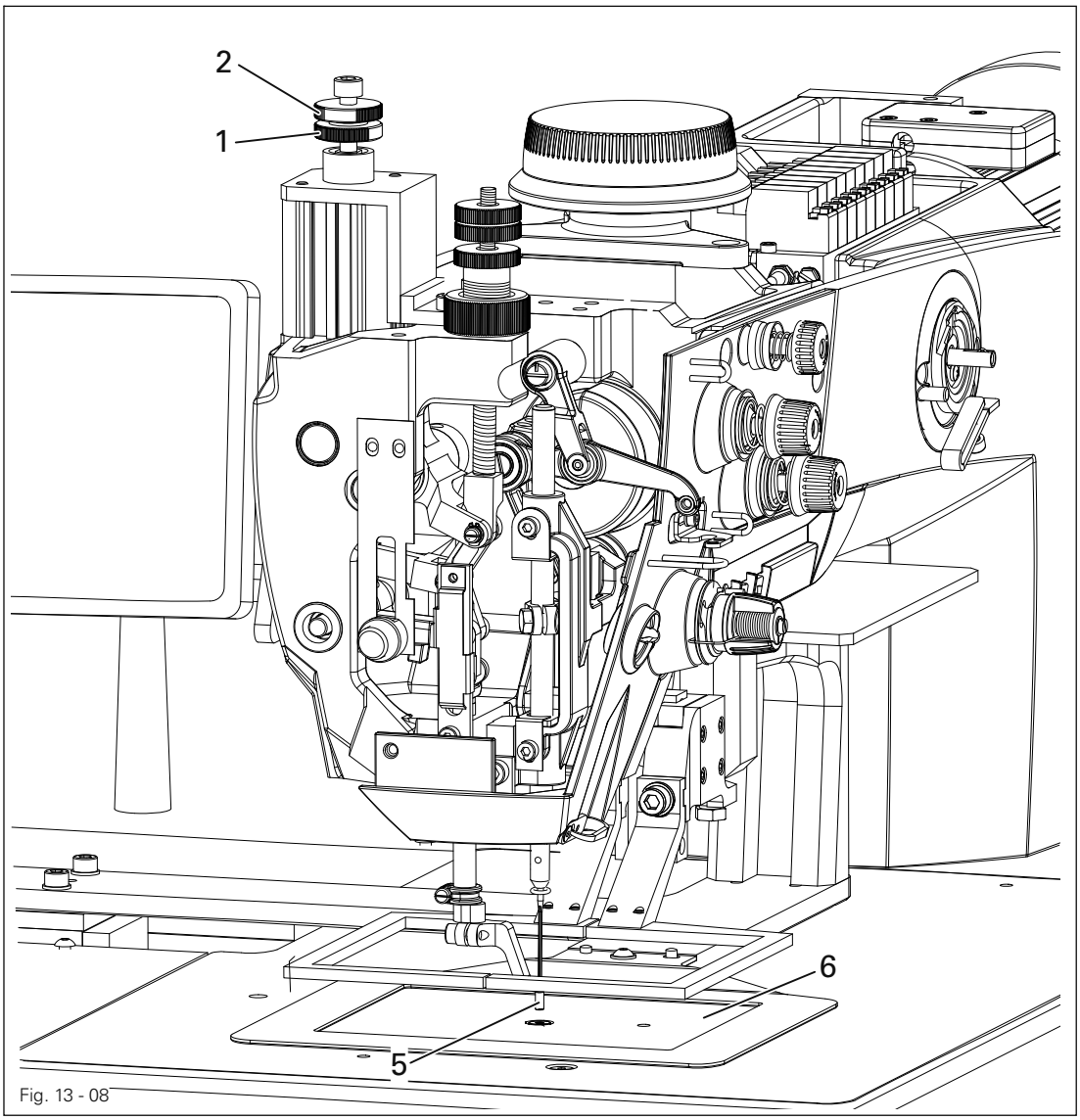

Fig. 13 - 08

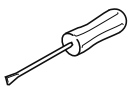

- Turn screw **1** (lock nut **2**) according to the requirement.

13.05.09 Bobbin winder

Requirement

1. When the bobbin winder is engaged, the winding spindle must be driven reliably. When it is disengaged, friction wheel **3** should not be touching drive wheel **1**.
2. When it is switched off, the bobbin winder must click securely into its end position (knife raised).

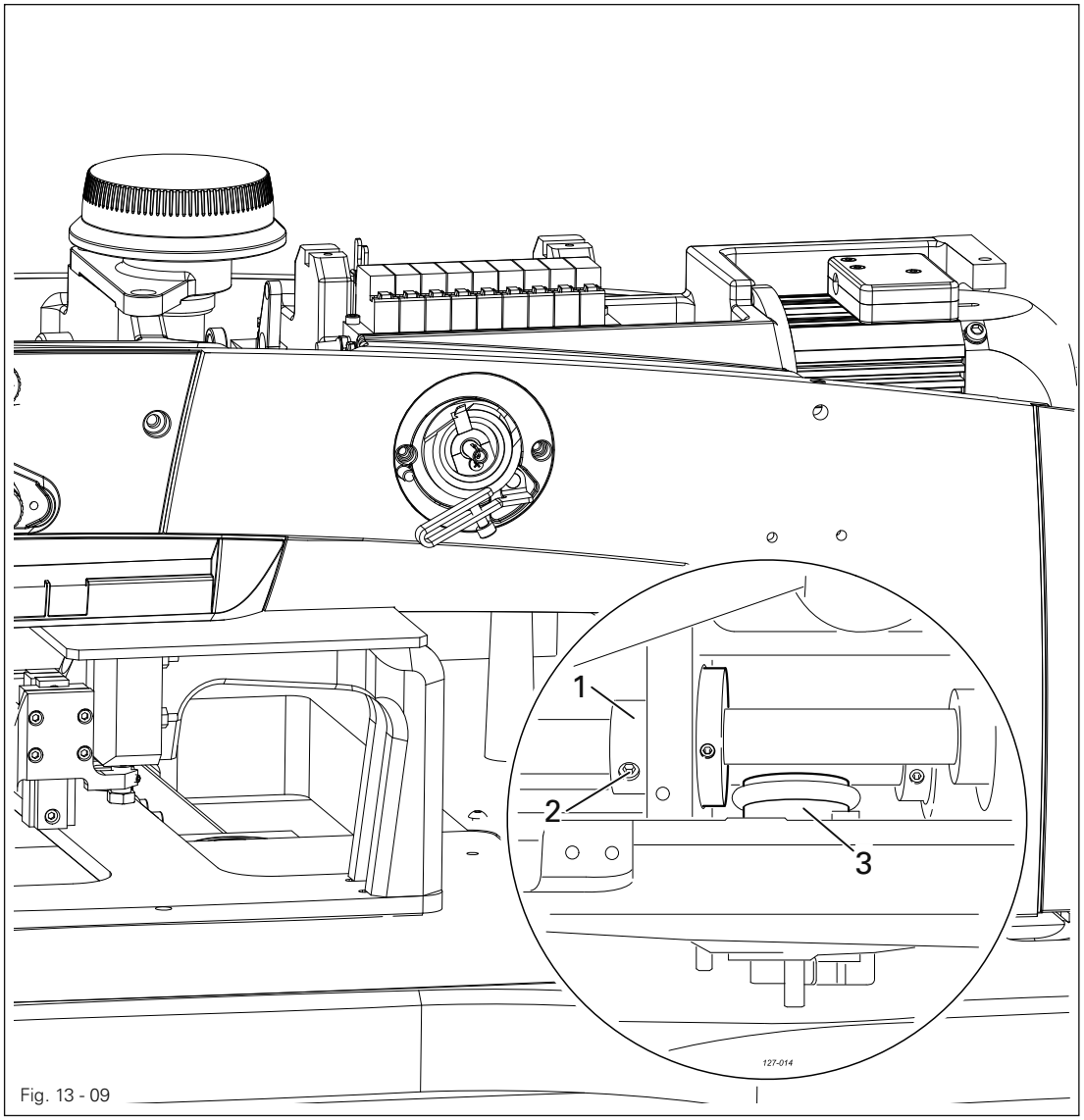

Fig. 13 - 09

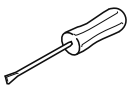

- Adjust drive wheel **1** (screw **2**) in accordance with the **requirement**.

13.05.10 Thread check spring and thread regulator

Requirement

1. The movement of thread regulator **3** must be completed when the needle point enters the material.
2. When the thread loop is at its largest while being passed around the hook, the check thread spring **3** should rise slightly from the rest **1**.

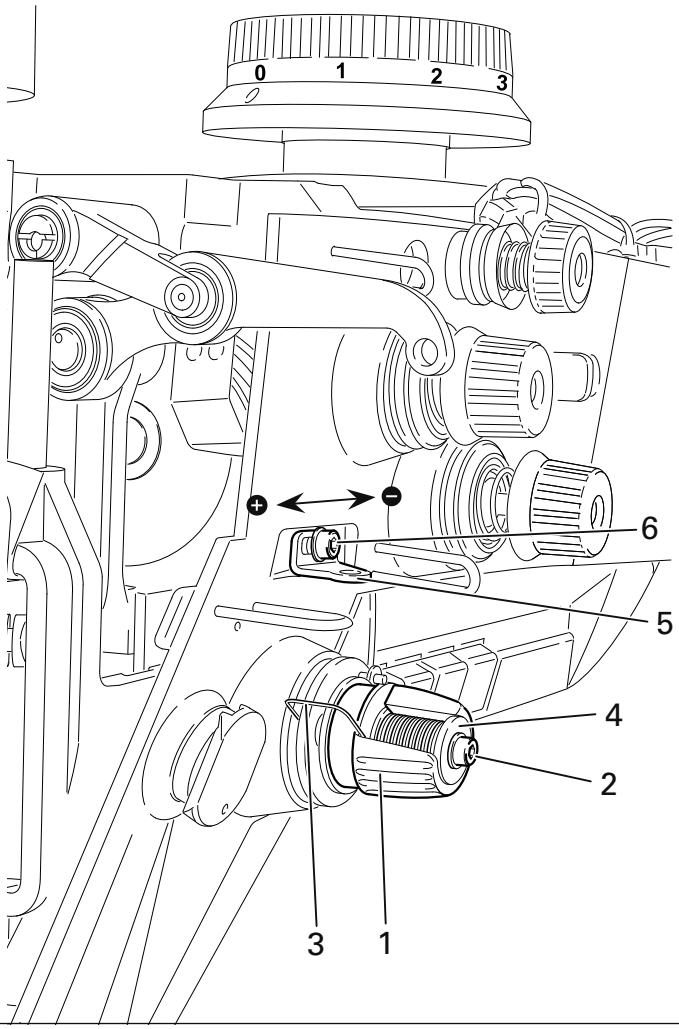

Fig. 13 - 10

- Position rest **1** (screw **2**) in accordance with **requirement 1**.
- Turn sleeve **4** (screw **2**) to adjust the tension of thread check spring **3**.
- Position thread regulator **5** (screw **6**) in accordance with **requirement 2**.

For technical reasons it may be necessary to deviate from the indicated spring stroke or spring tension.
Move thread regulator **5** (screw **6**) towards ("+") (= more thread) or ("-") (= less thread).

13.05.11 Lubrication

Requirement
After a running time of **10** seconds a thin film of oil should be visible on paper strip **1** when this is held over the hook.

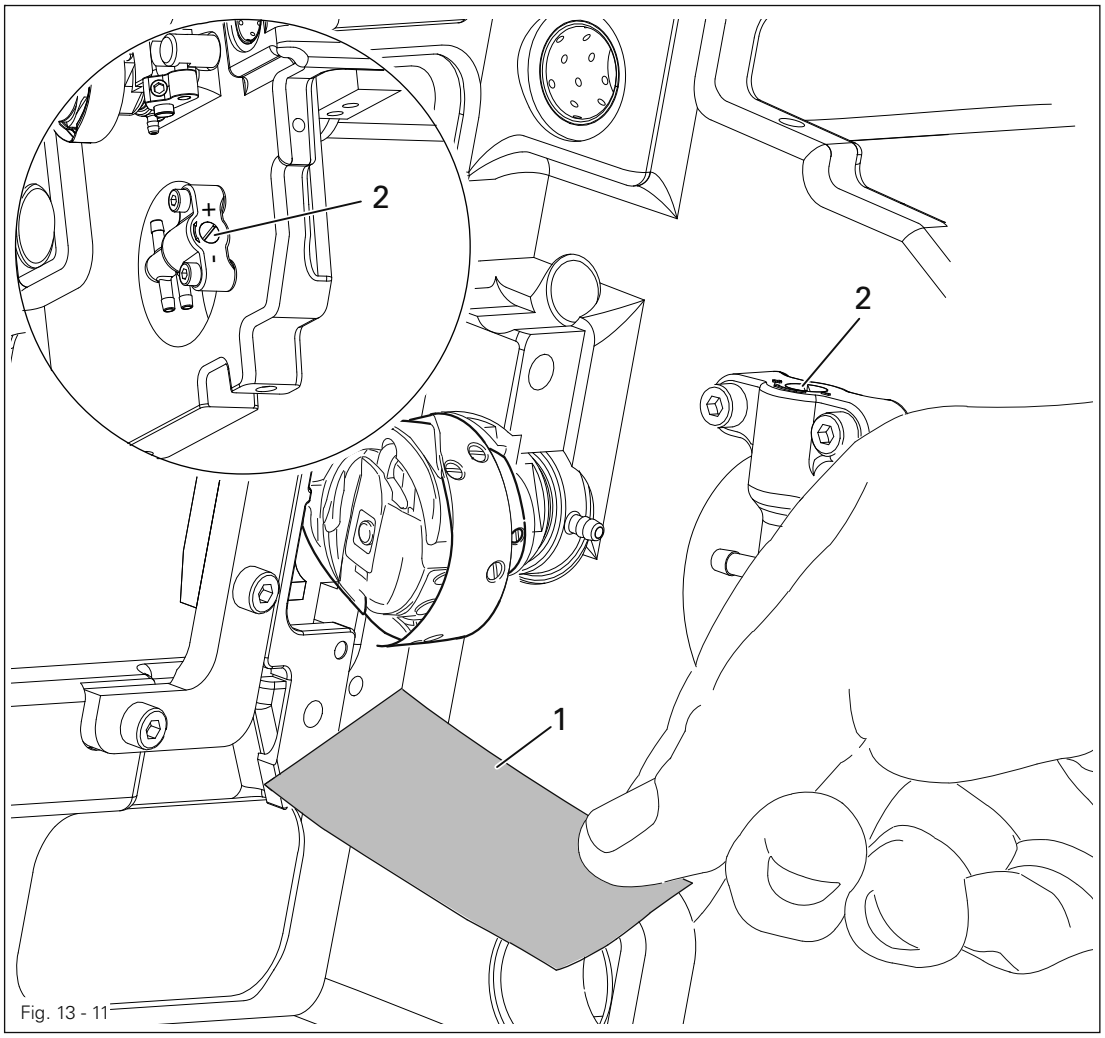

Fig. 13 - 11

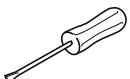

- Check that the machine is filled with oil and that the oil lines are free of air.



- Call up bobbin winding function.

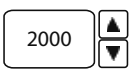

- Adjust winding speed to **2000**



- Use the sewing start button to start the winding function and allow the machine to run for **2** - **3** min.
- With the machine running, hold paper strip **1** against the hook and check the **requirement**.
- If necessary, regulate amount of oil with screw **2**.



Do not reach into the hook area while the machine is running!
Danger of injury from rotating hook tipsreifen!

13.05.12 Basic position of the thread trimmer

Requirement

1. When the thread trimmer is in its resting position (cylinder extended), the point of thread catcher **6** should be flush with the cutting edge of knife **7** (see arrow).
2. The roller lever **3** should have a clearance of **1 mm** to the connecting piece.

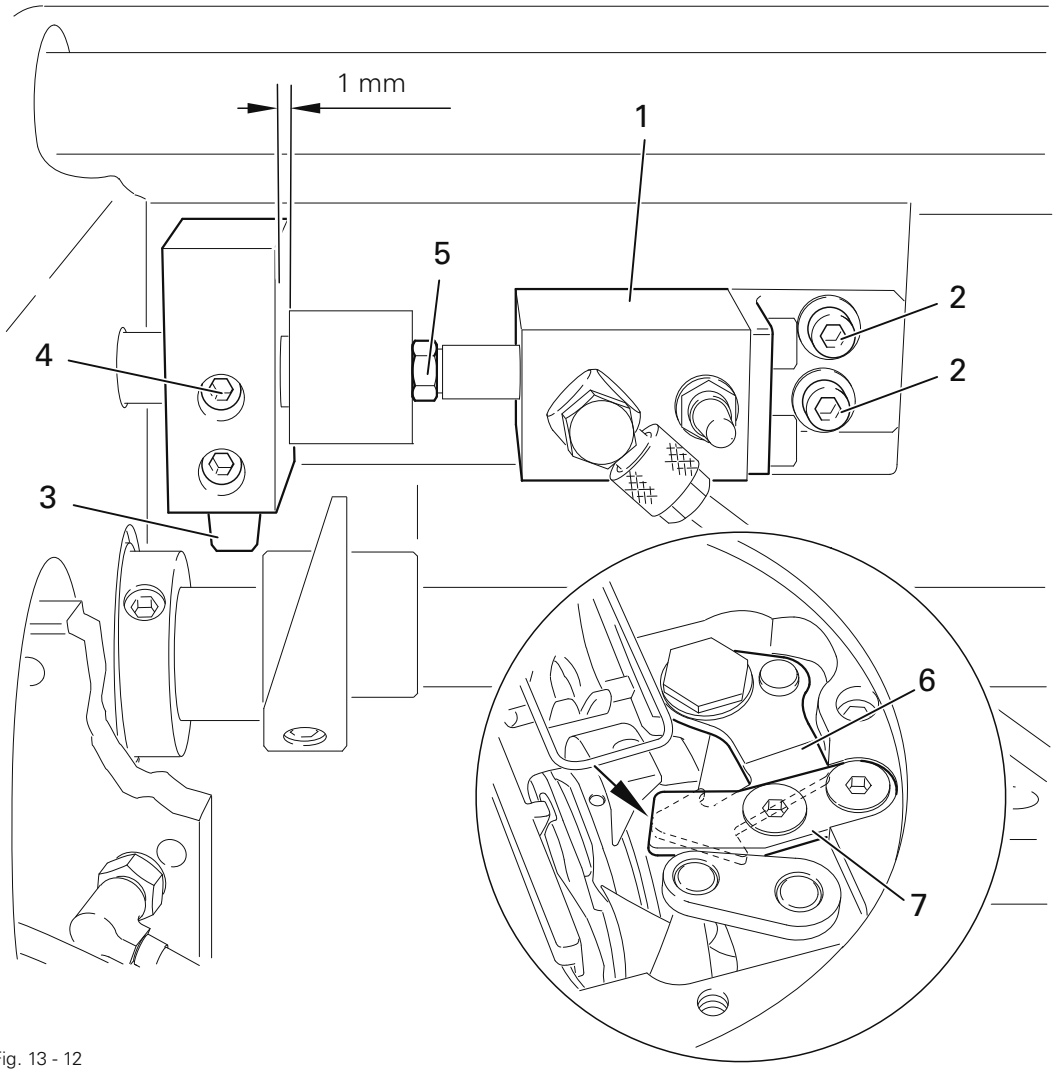

Fig. 13 - 12

- Adjust thread trimmer **1** (screws **2**) in accordance with **requirement 1**.
- Adjust roller lever **3** (only screw **4**) in accordance with **requirement 2**.

13.05.13 Control cam to roller lever clearance (resting position)

Requirement
When the thread trimmer is in its resting position (balance wheel position **270**°) there should be a clearance of **0.1 mm** between the roller lever **5** and the outside edge of control cam **1**.

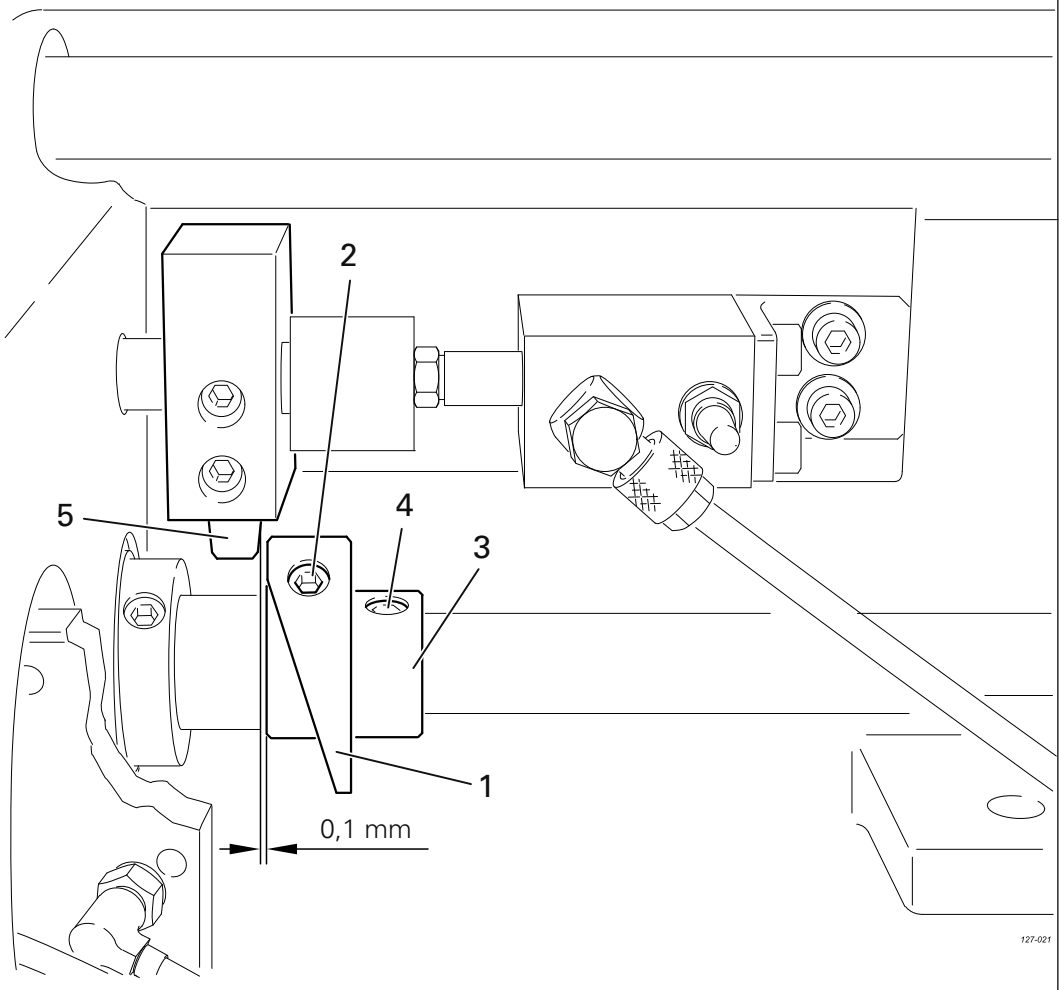

Fig. 13 - 13

- Adjust control cam **1** (screw **2**) together with retaining collar **3** (screw **4**) in accordance with the **requirement**.

13.05.14 Adjusting the control cam

Requirement
When the take-up lever is at the top of its stroke (balance wheel position **70°**), the cutting operation should just have been completed.

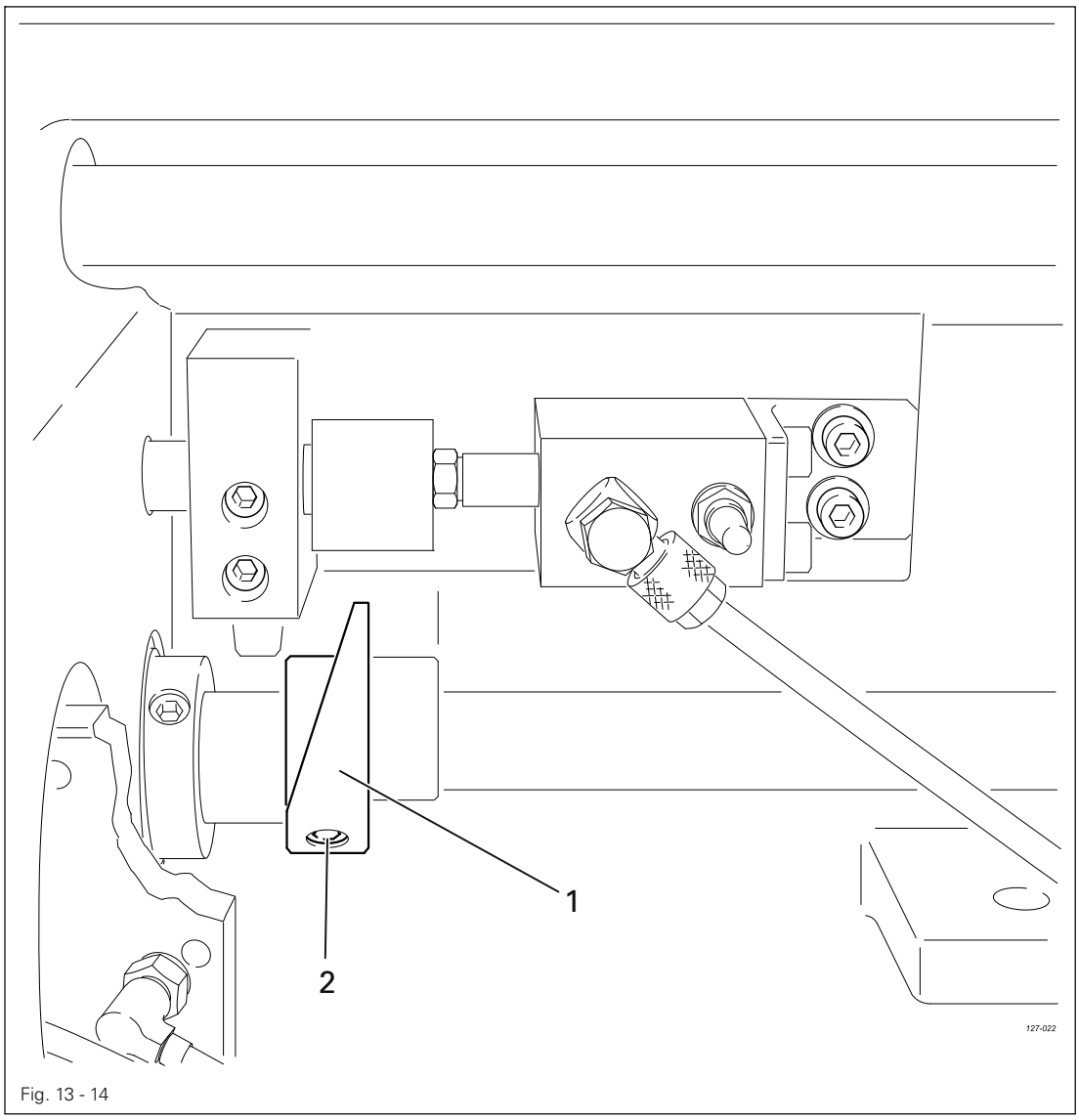

Fig. 13 - 14

- Adjust control cam **1** (screw **2**) in accordance with the **requirement**.

13.05.15 Knife pressure

Requirement
The thread should be cut reliably at all times.

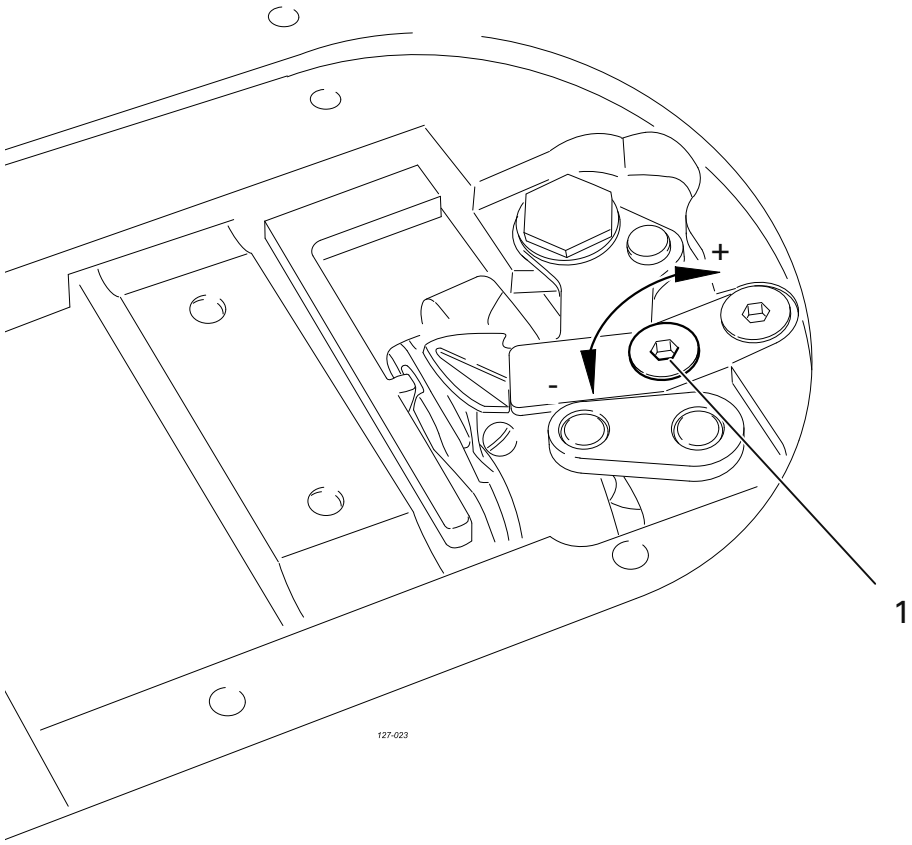

Fig. 13 - 15

- Increase ("**+**") or reduce ("**-**") the knife pressure accordingly with screw **1**.

13.05.16 Manual cutting test

Requirement
Both the needle and the bobbin thread should be cut neatly.

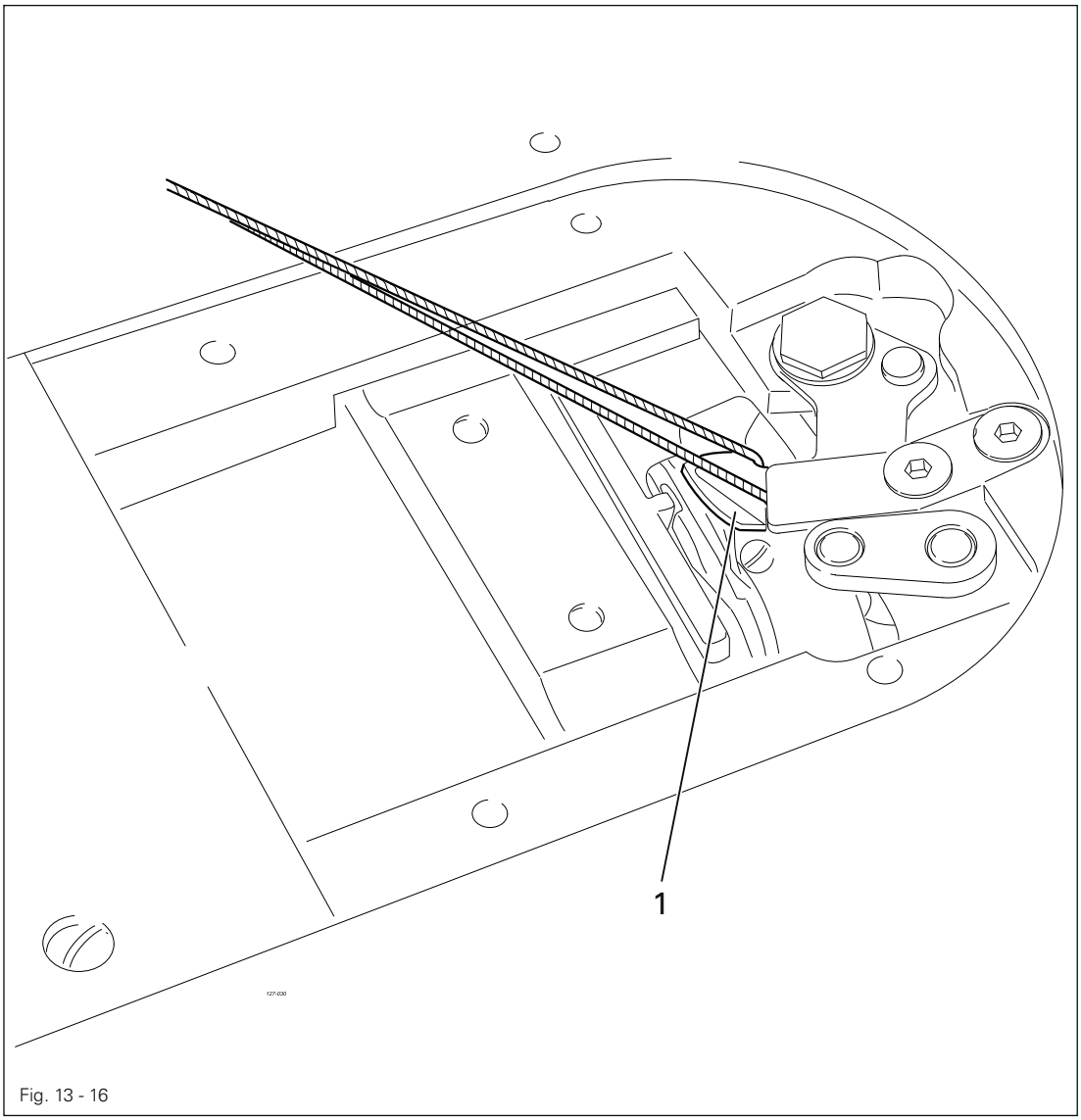

Fig. 13 - 16

- Bring thread catcher **1** by hand to its front position.
- Take a double thread and place it into the catcher slot.
- Carry out a manual cutting test.
- If the thread is not cut in accordance with the **requirement**, adjust the knife pressure as described in Chapter **13.05.15 Knife pressure**.

13.05.17 Aligning the clamp drive

Requirement
The clamp should be parallel to the table plate both in "X" and in "Y" direction.

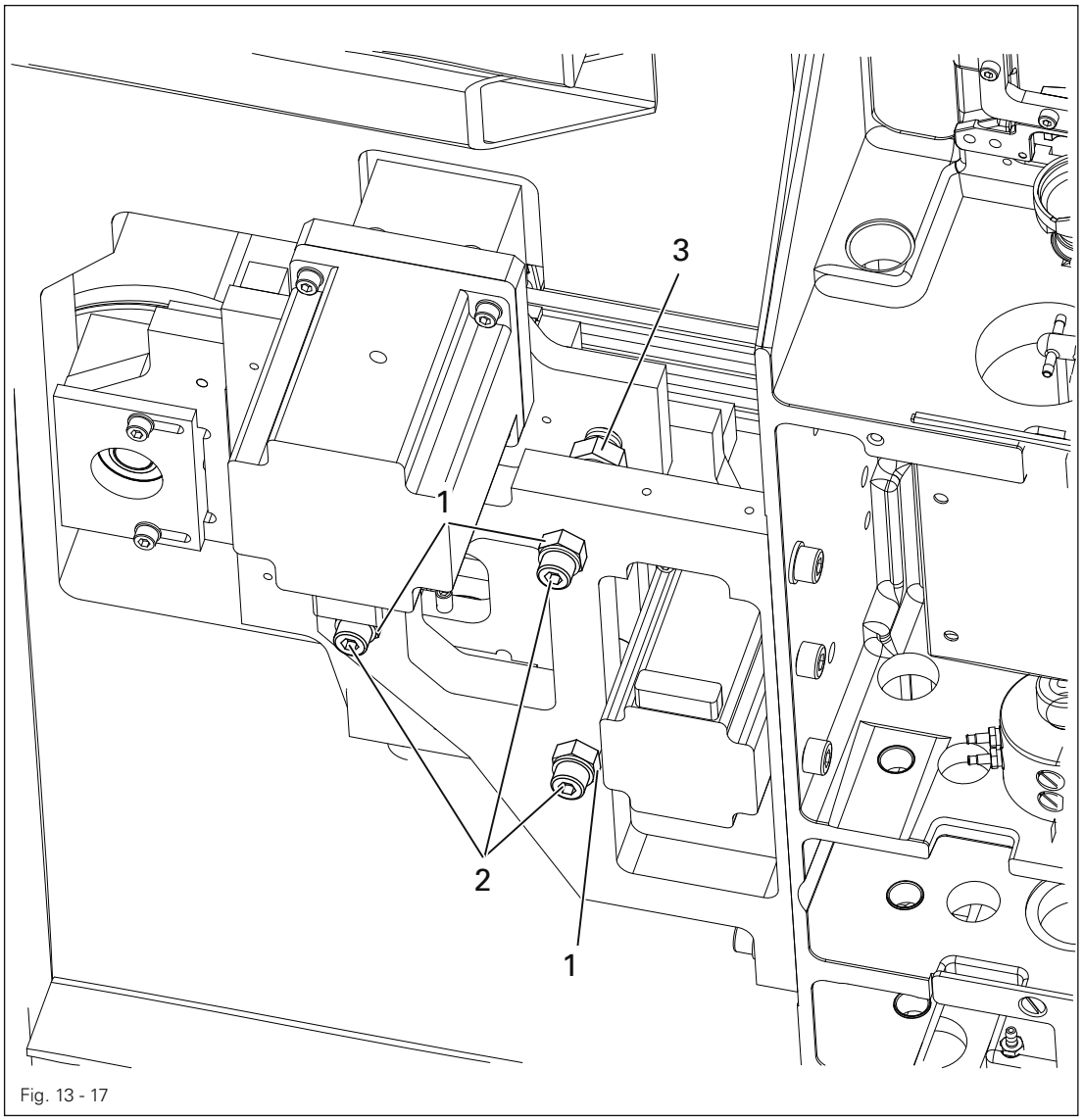

Fig. 13 - 17

- Turn adjusting nut **1** (lock nut **2** and lock nut **3**) according to the requirement.

13.05.18 Adjusting belt tensions

Requirement
The belt tensions should be tested and adjusted using a measuring device.
The clamp drive belt tensions should be tested with a measured value of
300 - **400** Nm..

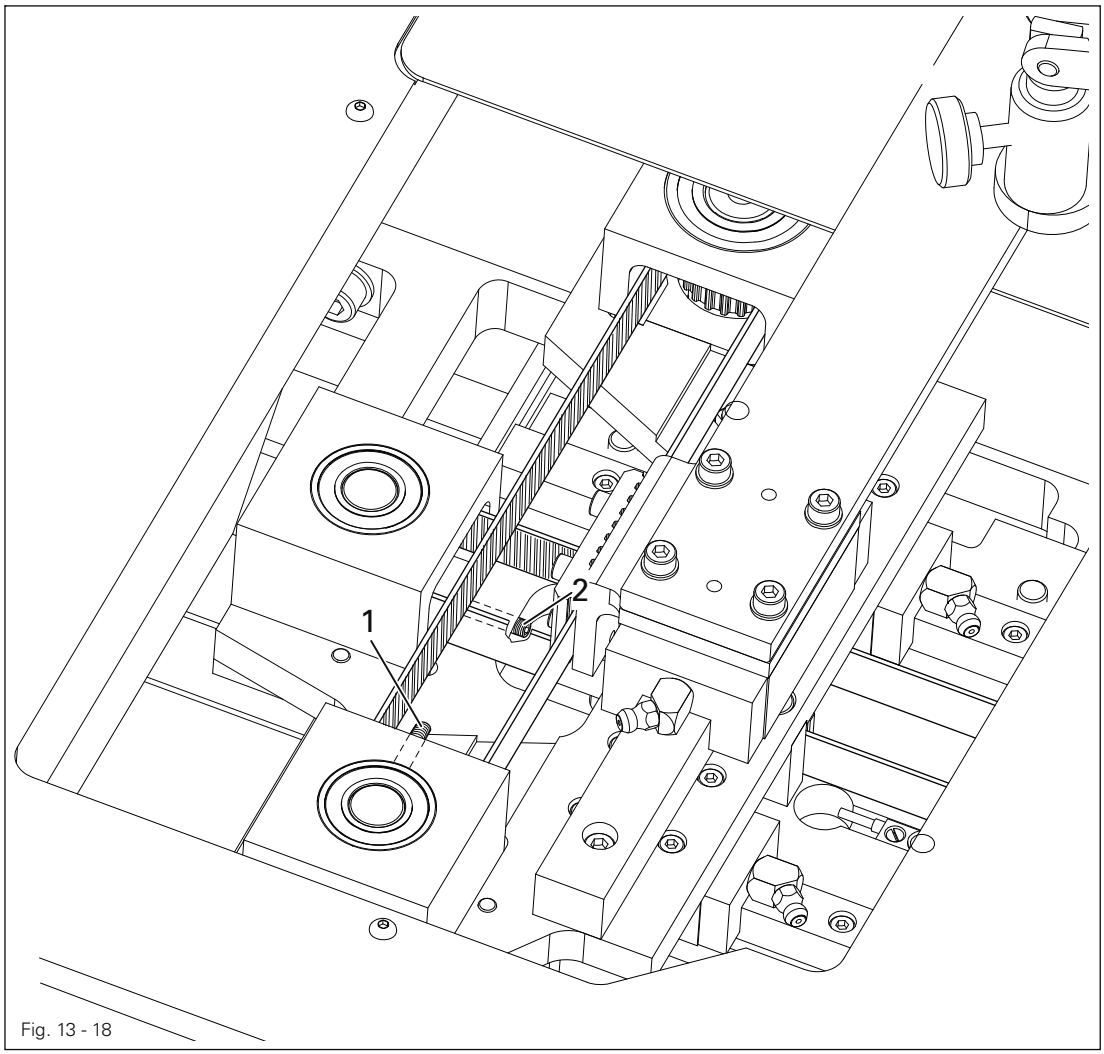

Fig. 13 - 18

- Adjust clamp drive belt tensions using screws **1** (screws **2**) in accordance with the requirement.

The measuring device is available under Order No **99-13**7 171-91.

13.05.19 Reference points for the clamp drive

Requirement
The clamp drive should approach all reference points using the "Test" function..

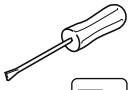

- Switch machine on.



- Call up entry mode.

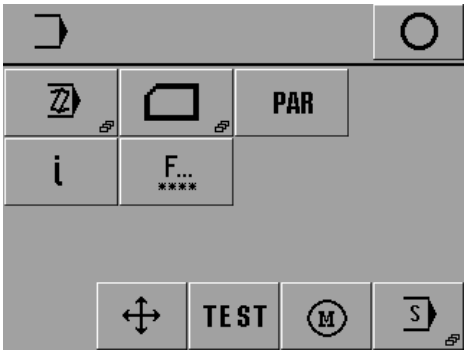

TEST

- Call up "Test"

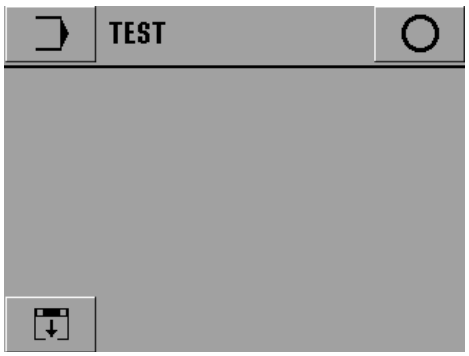

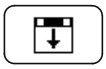

- Close clamp.

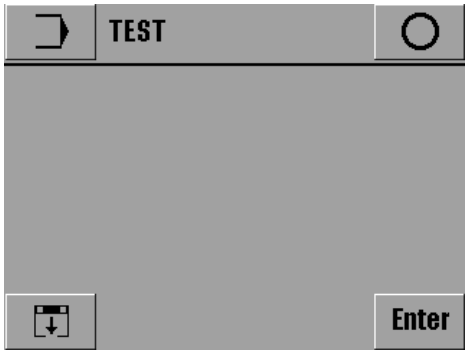

Enter

- Confirm with the "Enter" key.
  The 1st reference point is approached.

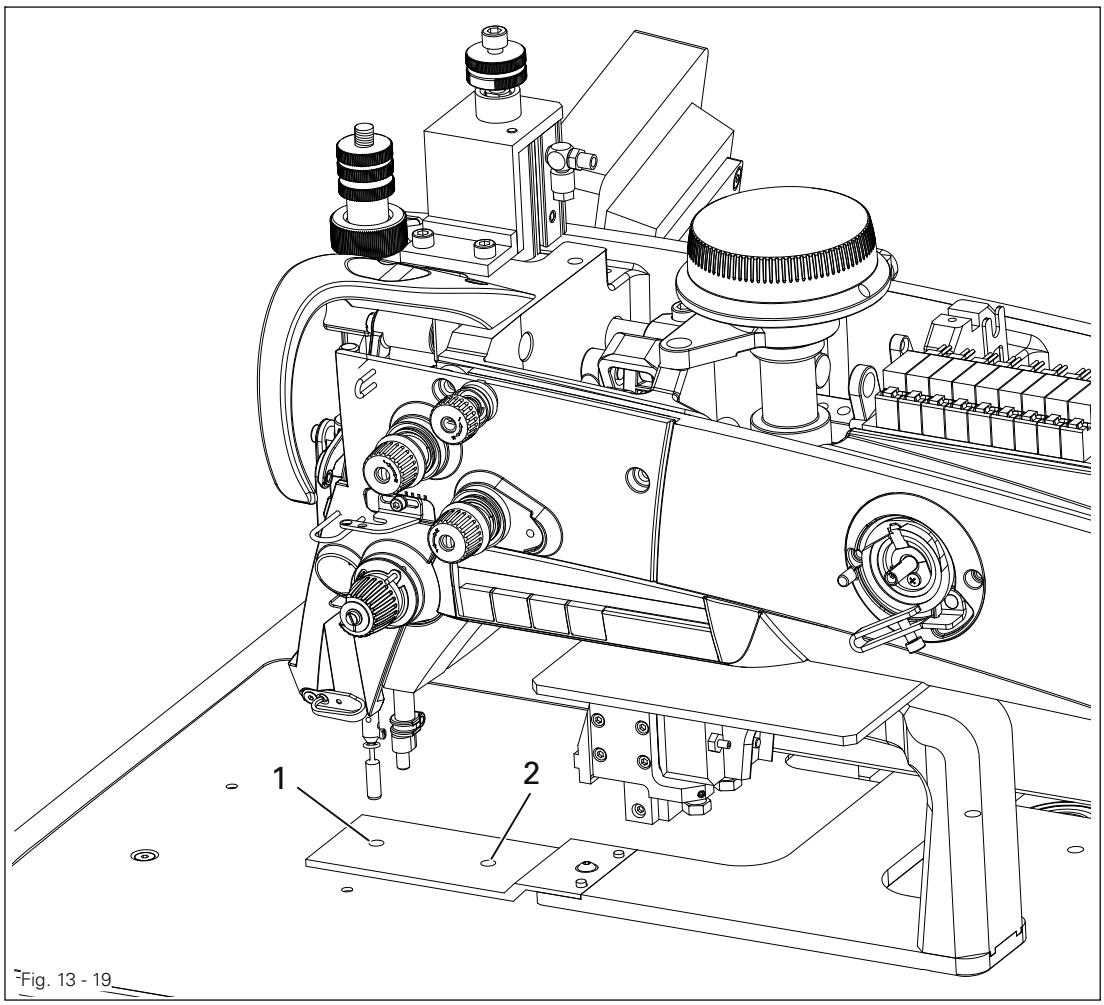

Fig. 13 - 19

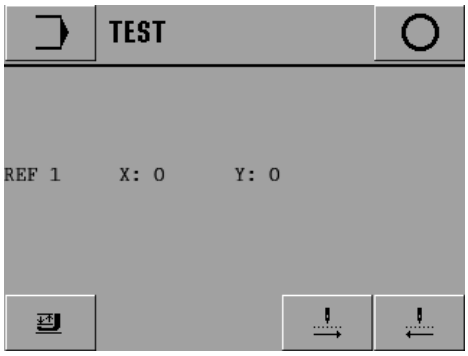



- Use these buttons to approach the **2**nd reference point.

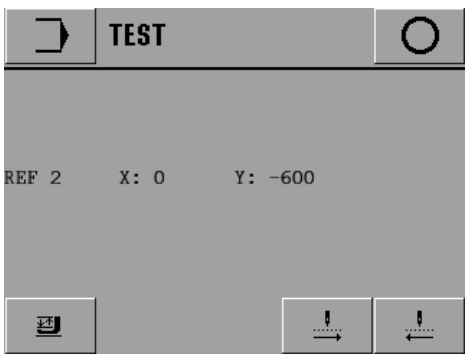

Setting at length deviation from point **1** to point **2**:

- Carry out increment correction using parameter "**206**" according to the requirement.



After increment correction, the zero points must be checked and if necessary adjusted; see Chapter **8.06** Check/adjust zero points..

13.06 Service menu

The status of the digital inputs is displayed in the service menu. The outputs can be set or reset manually. Functions for executing a cold start, for switching the key tone on/off and for setting the zero point can also be called up.

- Switch on the machine.
- Call up the input mode.
- Call up the service menu.

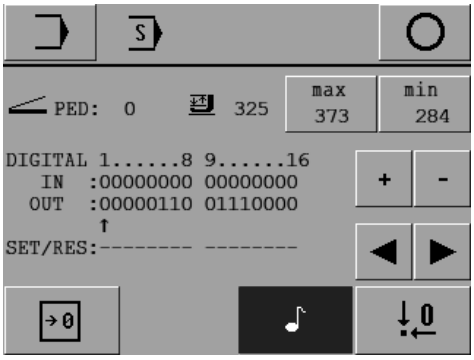

Explanation of the functions

Input mode
This function is used to change to the initial state of the input mode.

Conclude input
This function is used to conclude the input and change into the sewing mode.

Plus/minus keys
These are used to set (+) or reset (-) the selected output.

Arrow keys
These are used to select the desired outputs.

Cold start
This function is used to carry out a cold start, see Chapter **13.06.01 Cold start**.

Switching the key tone on / off
This function is used to switch the key tone on or off, see Chapter **8.05 Activate/deactivate key tone**.

Adjusting the zero points
This function is used to call up a menu for setting the zero points, see Chapter **8.06 Adjusting the zero points.**

Adjusting the potentiometer for speed reduction
One menu each for the setting of the max./ min. potentiometer for speed reduction is called up via this function (see **chapter 8.07**).

13.06.01 Cold start

When a cold start is carried out, all newly created or altered programs, as well as all altered parameter settings are deleted!
The machine memory is deleted or set back to the status at the time of delivery.

- Switch on the machine and call up the input mode.
- Call up the service menu.
- Call up the cold start function.

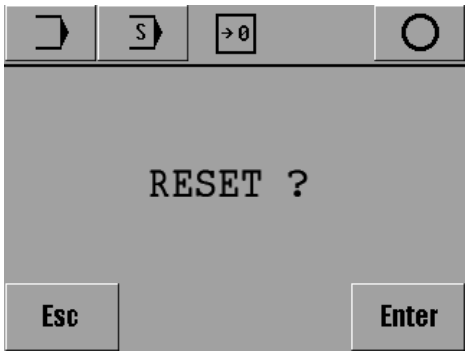

- Confirm that a cold start is to be carried out.

Explanation of further functions

Input mode
This function is used to change to the initial state of the input mode.

Service menu
This function is used to return to the service menu, see Chapter **13.23 Service menu**.

Conclude input
This function is used to conclude the input and change into the sewin

Esc
Cold start is cancelled.

13.07 Sewing motor adjustments

- Switch on the machine.



- Call up the input mode.

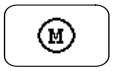

- Call up menu for testing and setting of the sewing motor.

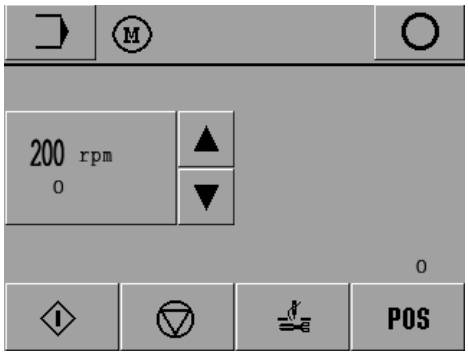

Explanation of the functions



Conclude input
This function is used to conclude the input and change into the sewing mode.

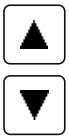

Speed adjustment
This function is used to increase or reduce the set speed.



Sewing motor start
This function is used to start the sewing motor with the set speed.



Sewing motor stop
This function is used to stop the sewing motor again.



Thread trimming cycle
This function is used to run the thread trimming cycle.



Needle function
The current actual position of the needle is displayed.

13.08 Parameter settings

All parameters which can be altered are shown in the parameter list (Chapter **13.08.02**). A description of how to select parameters and alter the values is given below.

13.08.01 Selecting and altering parameters.



- Switch on the machine and call up the input mode.



- Call up the parameter input function.

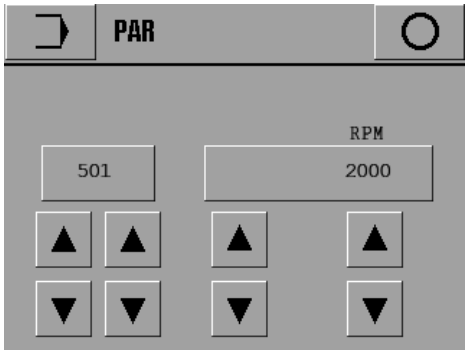

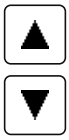

- Select the parameter separately by group (hundred figure) and parameter within the function group.

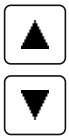

- Alter the value of the selected parameter.



- Quit parameter input function.

13.08.02 Parameter list

Group	Parameter	Description	Setting range	Set value
0	002	Sewing stitch (1..5) speed (500 - 2800)		1: 500 2: 900 3: 1500 4: 2000 5: 2500
	003	Clamp type 0 - split, 1 - single	0 -1	0
	004	Bobbin thread counter	ON - OFF	ON
	005	Auto. sequencing	ON - OFF	OFF
	006	Reverse after thread trimming	ON - OFF	ON
	007	Starting point = reference point when scaling	ON - OFF	OFF
	009	Move to SP via ZP after sequencing	ON - OFF	OFF
	010	Move to SP via ZP according to number of programs	ON - OFF	OFF
	011	Treadle mode (0 = level, 1 = FlipFlop)	0 - 1	0
	015	Power reduction of stepping motors	ON - OFF	ON
	028	Number of slow starting stitches	1 - 9	2
	029	Auto. clamp opening after program end off	ON - OFF	OFF
	030	Continuous start, test function	ON - OFF	OFF
	031	0 = material thickness < = 4.5 mm, 1 = material thickness > = 4.5 mm	0 -1	0
	032	Obstacles	ON - OFF	OFF
200	201	Min. X-coordinates	-650 - 0	-650
	202	Max X-coordinates	0 - 650	650
	203	Min. Y-coordinate (3108-1/1306)	-1000 - 0	-600
		Min. Y-coordinate (3108-1/1310)	-1000 - 0	-1000
	204	Max. Y-coordinate (3108-1/1306)	-600 - 0	0
		Max. Y-coordinate (3108-1/1310)	-1000 - 0	0
	205	Increment correction X	-30 - +30	0
	206	Increment correction Y	-30 - +30	0

Group	Parameter	Description	Setting range	Set value
200	207	0 = Foot jumper not attached, 1 = Foot jumper attached (lift monitoring active) 2 = Foot jumper not attached (lift monitoring active)	0 - 2	1
	208	Thread wedeler attached	ON - OFF	OFF
300	301	NIS	0 - 255	78
	302	Thread lever t.d.c.	0 - 255	61
	303	Thread trimming position on	0 - 255	180
	304	Thread trimming position off	0 - 255	245
	305	Thread clamp position closed, during sewing	0 - 255	71
	306	Thread clamp position open, during sewing	0 - 255	235
	307	Reverse rotation position	0 - 255	20
	308	Stop position	0 - 255	71
	309	Thread tension during thread trimming	0 - 255	0
	310	Thread-in position	0 - 255	56
500	501	Reduced speed (set value x 100)	1 - 28	15
	502	Trimming speed (set value x 100)	5 - 25	2
	503	Speed during bobbin winding	2 - 28	15
	505	Time for wiper [in 10ms]	1 - 50	30

13.09 Internet update of the machine software

The machine software can be updated with PFAFF flash programming. For this purpose the PFP boot program (from **version 3.25** on) and the appropriate control software for the machine type must be installed on a PC. The transfer of the data to the machine can be carried out with a null modem cable (part no. **91-291 998-9**1) or with an SD-card. The SD-card must be formatted in the **FAT**16 format and must not exceed a capacity of 2 **GBytes**.

The PFP boot program and the control software of the machine type can be downloaded from the PFAFF-homepage using the following path:
www.pfaff-industrial.com/pfaff/de/service/downloads

13.09.01 Update with null modem cable

- After downloading the PFP tool and the control software, open the PFP program.
- Select the **machine type** and under control unit **P320**.
- The software version is displayed under **report**.

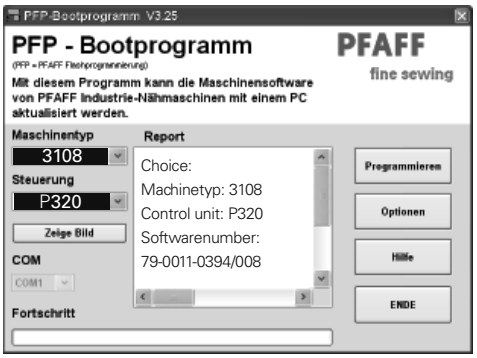

- Switch off the machine.
- Connect the PC (serial interface or appropriate USB-adapter) and the machine control unit (**RS232**). To do so disconnect the plug of the control panel.

While the machine software is being updated, no setting up, maintenance or adjustment work may be carried out on the machine!

- Switch on the machine, keeping the boot key **1** pressed.
- Press the "OK" button.
  The software update is carried out, the update progress is shown on the bar display of the PFP boot program.
- During the updating process the machine must not be switched off.
- When the update has been completed, switch off the machine and end the PFP boot program.
- End the connection between the PC and the machine control unit and reconnect the control panel to the machine control unit.

- Switch on the machine
- A plausibility control is carried out and, if necessary, a cold start.

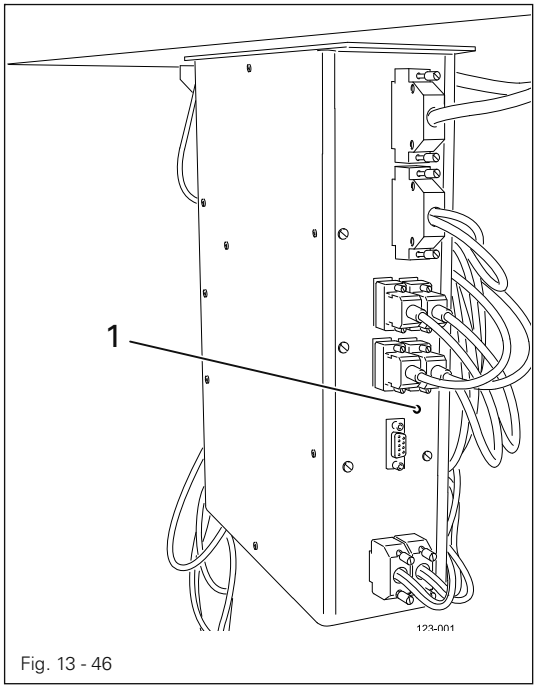

Fig. 13 - 46

More information and assistance is at your disposal in the file "PFPHILFE.TXT", which can be called up from the PFP boot program by pressing the "help" button.

13.09.02 Update with SD-card (control panel BDF S3 required)

- After downloading the PFP tool and the control software, open the PFP program.
- Select the machine type and under control unit SD-CARD.
- The software version is displayed under report.

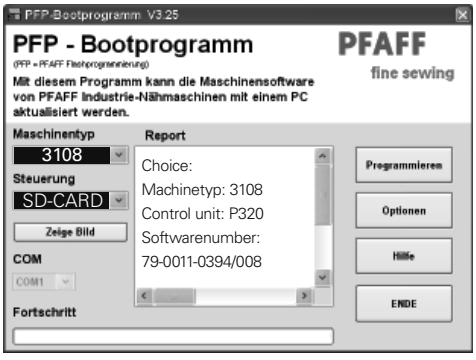

- Under **programming** copy the software to the drive with the SD-card.
- Remove plug connection for the touch control panel from the control box.
- Insert control panel BDF-S3 at the control box.

- Push the SD card into the control panel with the machine switched off.

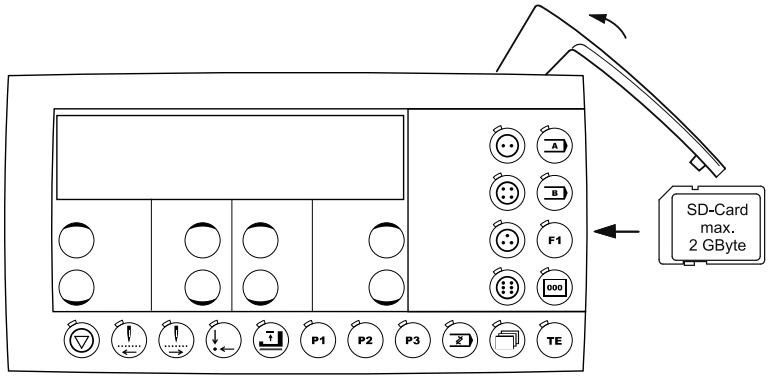

Update machine software as follows:

While the machine software is being updated, no setting up, maintenance or adjustment work may be carried out on the machine!

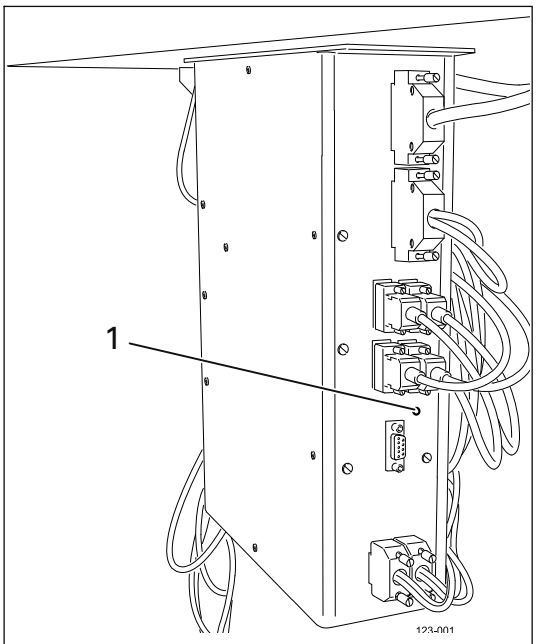

Fig. 13 - 46

- Switch on the machine, keeping the boot key **1** pressed.
- Press the "TE" key.
  The software update is carried out. During the updating process the diode in the memory card slot flashes.
- During the updating process the machine must not be switched off.
- When the update has been completed, switch off the machine and remove the SD-card.
- Switch on the machine
- A plausibility control is carried out and, if necessary, a cold start.

More information and assistance is at your disposal in the file "PFPHILFE.TXT", which can be called up from the PFP boot program by pressing the "help" button.

13.10 Error message explanations

13.10.01 General errors

Display	Description	Response
ERROR: 1	STACK_OVERFLOW processor error	Troubleshoot
ERROR: 2	STACK_UNDERFLOW processor error	Troubleshoot
ERROR: 3	UNDEF_OPCODE processor error	Troubleshoot
ERROR: 4	PROTECTION_FAULT processor error	Troubleshoot
ERROR: 5	ILLEGAL_WORD_OPERAND processor error	Troubleshoot
ERROR: 6	ILLEGAL_INSTRUCTION processor error	Troubleshoot
ERROR: 7	ILLEGAL_BUS_ACCESS processor error	Troubleshoot
ERROR: 8	NMI processor error	Troubleshoot
ERROR: 10	OTE not attached (NO IDENTITY)	Troubleshoot
ERROR: 11	OTE not programmed (NEW IDENTITY)	Troubleshoot
ERROR: 12	OTE checksum error	Troubleshoot
ERROR: 13	OTE header invalid	Troubleshoot
ERROR: 14	OTE user data invalid	Troubleshoot
ERROR: 15	Checksum error in power failure backup data	Troubleshoot
ERROR: 30 (OTE error)	OTE error	Troubleshoot
ERROR: 31 (sewing motor error)	Sewing motor error	Troubleshoot
ERROR: 50	Incorrect control panel	Switch off
ERROR: 51	Incorrect machine class in OTE (ILLEGAL IDENTITY)	Switch off
ERROR: 52	Incorrect main drive software	Switch off
ERROR: 53	Mains monitor (Bangalore) has triggered	Switch off
ERROR: 101	Mains voltage	Switch off
ERROR: 102	Mains part overload	Troubleshoot
ERROR: 103	24V too low	Troubleshoot
ERROR: 201 (sewing motor error)	Sewing motor error	Troubleshoot
ERROR: 202	Image too large	Troubleshoot
ERROR: 203	Sewing motor data transfer overload	Troubleshoot
ERROR: 204 (#error No.)	Tacting locked: **1** – open clamp, **2** – needle position, **3** - needle range	Troubleshoot
ERROR: 205	Movement locked (needle position)	Troubleshoot
ERROR: 206	No NIS	Troubleshoot
ERROR: 207	Ramp not completed	Troubleshoot
ERROR: 208	Zero point not found	Troubleshoot
ERROR: 209	Sewing locked (clamp open)	Troubleshoot
ERROR: 210	Bobbin thread fault	Troubleshoot

Display	Description	Response
ERROR: 211	Stitch too large	Troubleshoot
ERROR: 212	Memory overrun	Troubleshoot
ERROR: **213** (#conv. error)	Conversion error	Troubleshoot
ERROR: 301	Clamp**1** open locked (needle position)	Troubleshoot
ERROR: 302	Clamp**2** open locked (needle position)	Troubleshoot
ERROR: 303	Foot open locked (needle position)	Troubleshoot
ERROR: 305	Clamp**2** closed locked (clamp **1** is open with split clamp)	Troubleshoot
ERROR: 306	Clamp**1** closed locked (clamp **2** is closed with split clamp)	Troubleshoot
ERROR: **401** (sewing motor error)	Sewing motor error	Troubleshoot
ERROR: 402	Sewing motor data transfer overload	Troubleshoot
ERROR: 403	Program station not programmed	Troubleshoot
ERROR: 404	Program locked	Troubleshoot
ERROR: 405	No program	Troubleshoot
ERROR: 406	No NIS	Troubleshoot
ERROR: 407	Zero points invalid	Troubleshoot
ERROR: 408	Machine not in basic position	Troubleshoot
ERROR: 409	Zero point not found	Troubleshoot
ERROR: 410	Memory overrun when writing to internal memory	Troubleshoot
ERROR: 411	No program number free	Troubleshoot
ERROR: 412	Generate memory overrun with stitch data	Troubleshoot
ERROR: **413** (#conv.error)	Conversion error	Troubleshoot
ERROR: 414		
ERROR: 415		
ERROR: **416** (sub-error)	SD card reader error **1**: No SD card inserted **2**: Incorrect SD card (does not fit **3108**) **3**: SD card not correctly inserted **4**: SD card write-protected **5**: Data error on SD card **6**: Formatting failed **7**: File does not fit **3108** **8**: Incorrect file size **9**: Transfer error **10**: File could not be deleted **11**: OTE not inserted	Troubleshoot
ERROR: 417	No piercing point for bobbin winding found	Troubleshoot

Display	Description	Response
ERROR: 418	1. Piercing point for bobbin winding is outside sewing range	Troubleshoot
ERROR: 419	Incorrect sewing stitch number	Troubleshoot
ERROR: 420	Incorrect fastening stitch number	Troubleshoot
ERROR: 421	Incorrect trimming stitch length	Troubleshoot
ERROR: 422	Incorrect version of machine data	Troubleshoot
ERROR: 423	Potentiometer jumper foot not configured	Troubleshoot
ERROR: 427	Image leaves sewing range	Troubleshoot
ERROR: 428	Block not marked or incorrectly marked	Troubleshoot
ERROR: 429	Memory overrun during programming	Troubleshoot
ERROR: 429	Memory overrun during programming	Troubleshoot
ERROR: 431	Stitch too large	Troubleshoot
ERROR: 432	Supporting point not allowed	Troubleshoot
ERROR: 443	Program too large, cannot read stitch data	Troubleshoot
ERROR: 448	Program only with stitch data	Troubleshoot

13.10.02 Sewing motor errors

Display	Description
1	Timeout
2	Position not reached
33	Parameter value invalid (ED)
35	Communication error
36	Init. not ready
37	Command overrun (ED)
64	Mains off during initialisation (ED)
65	Excess current directly after mains on
66	Short circuit
67	Mains off
68	Excess current during operation
70	Motor blocked
71	No incremental plug
74	Incremental encoder missing for transmission/reduction (ED)
173	Motor blocked in 1st stitch (ED)
175	Internal starting error
222	Dead man monitoring

13.10.03 Stitch generation errors

Display	Description
1	Incorrect machine code
2	'Clamp form' section or
	'obstacle' section missing or at incorrect position
3	Increment too large
4	Program end without thread trimming
5	Impermissible stitch length entry
6	Incorrect element in geometr. data set
7	Rapid motion although machine is sewing
8	Impermissible stitch length entry
9	Impermissible stitch length entry
10	Circle support point = circle end point
11	Division by zero
12	Impermissible stitch length entry
13	No coord. section before curve support point
14	Sewing field limit exceeded
15	Curve without end point
16	MFktBuffer overrun
17	Sewing command in loading point program
18	Incorrect curve support point
19	Incorrect curve support point
20	Incorrect curve support point
21	Incorrect curve support point
22	Stitch length not initialised
23	Loading point program not completed
24	Stitch width command in loading point program
25	Impermissible value for stitch section
26	Trimming command, although thread trimmed
27	Sewing command, although machine is sewing
28	Trimming command in sewing off range
29	Sewing off command, although thread trimmed
30	Trimming command directly after sewing command
31	Front backtack too long

13.11 List of inputs and outputs

Output	Name	Function	Comment
OUT1			
OUT2			
OUT3	Y3	Clamp **1** closed	Valve
OUT4	Y4	Thread wisher on (optional)	Valve
OUT5			
OUT6	Y6	Clamp **1** open	Valve
OUT7	Y7	Clamp **2** open	Valve
OUT8	Y8	Thread trimming on	Valve
OUT9	Y9	Thread tension up	Valve
OUT10	Y10	Secondary thread tension up (prog. output **4**)	Valve
OUT11	Y11	Foot up	Valve
OUT12	Y12	Thread clamp closed	Valve
OUT13	Y13	Clamp **2** closed	Valve
OUT14	Y14	2. Hopping foot level on (prog. output **3**)	Valve
OUT15		Programmable output **1**	
OUT16		Programmable output **2**	

Input	Name	Function
IN1	SMREF1	X-motor zero position
IN2	SMREF2	Y-motor zero position
IN3	IN1	Progr. Input **1**
IN4	IN2	Progr. Input **2**
IN5	E5	Foot switch
IN6		
IN7		
IN8		
IN9		
IN10		
IN11		
IN12		
IN13		
IN14		
IN15		
IN16		

14 Circuit diagrams

Reference list for circuit diagrams 91-191 543-95

A1	Quick P **320**ED control device
A2	P**1** control panel (BDF S**3** option)
A14	OTE sewing head detection
B31	Initiator (X-axis)
B32	Initiator (Y-axis)
H1	Sewing lamp
M1	Sewing motor
M2	SM**1** stepping motor (X-axis moving conjointly)
M3	SM**2** stepping motor (Y-axis stationary)
Q1	Main switch
S1	Treadle nominal value transmitter
S35	Foot switch
X1	Mains plug
X1A	P**1** control panel (BDF S**3** option)
X1B	OTE (cable)
X3	Incremental encoder (sewing motor)
X4A	M**2** stepping motor
X4B	M**3** stepping motor
X5	Inputs
X8	Sewing motor
X11A	CAN interface
X11B	Foot pedal nominal value transmitter
X13	Outputs
X30	Programmable outputs **1**+**2**
X35	S**35** foot switch
X53	Y **3**
X56	Y **6**
X57	Y **7**
X58	Y **8**
X59	Y **9**
X60	Y **10**
X61	Y **11**
X62	Y **12**
X63	Y **13**
X64	Y **14**
X65	Y **15**
X100	X-Y drive central plug

Y1	Clamp open
Y3	Clamp **1** closed left
Y4	Fadenklemme (Option)
Y6	Clamp **1** open left
Y7	Clamp **2** open right
Y8	Thread trimmer on
Y9	Thread tension up
Y10	Secondary thread tension closed (programmable output **4**)
Y11	Foot up
Y12	Thread clamp closed
Y13	Clamp **2** closed right
Y14	Hopping foot level on (programmable output **3**)
Y15	Turning cam (programmable output **1**)
Y16	Free (programmable output **2**)

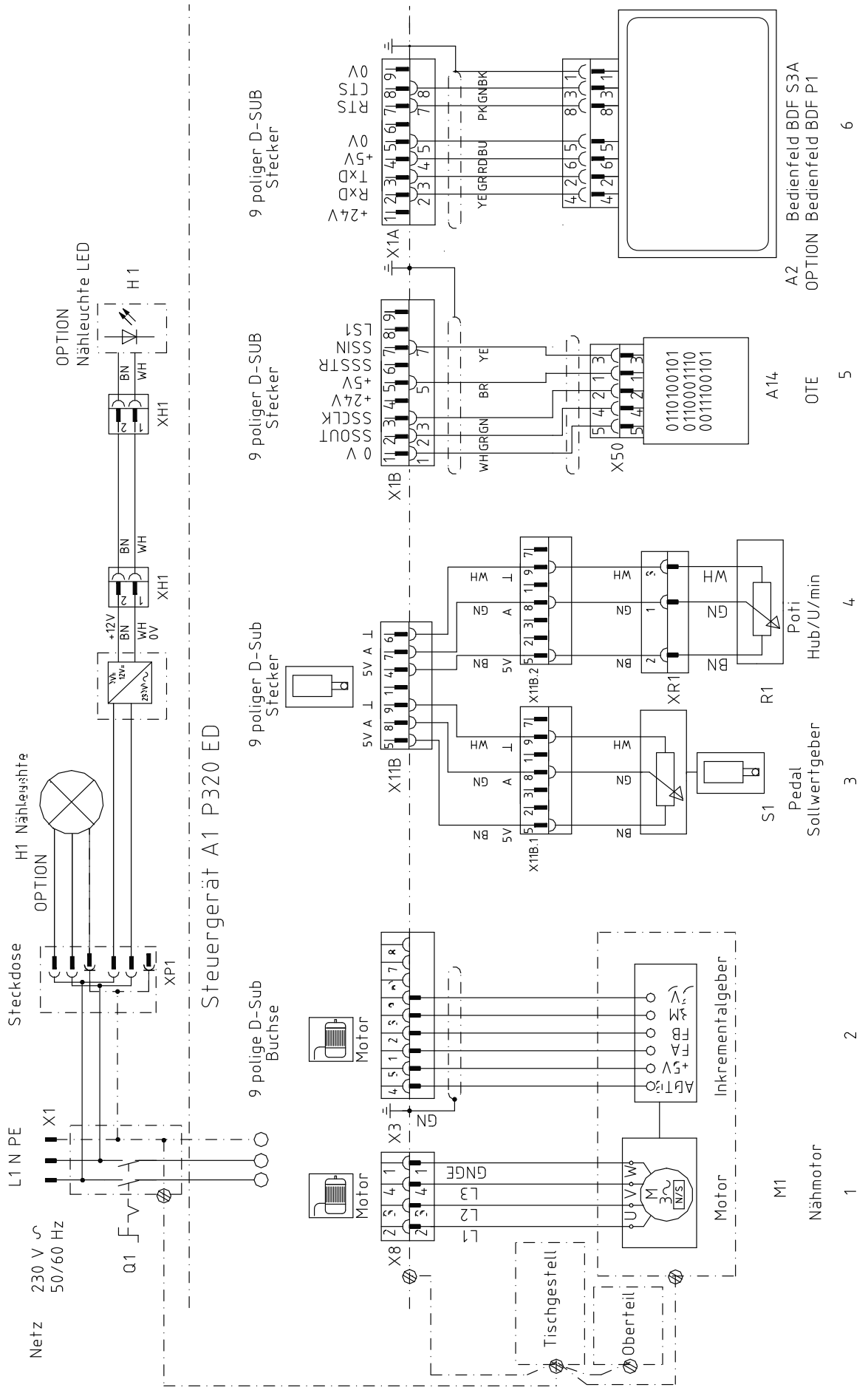
Netz
230 V ~
50/60 Hz
L1 N PE
X1
Q1
Steckdose
XP1
OPTION
H1 Nähleuchte
Steuergerät A1 P320 ED
OPTION
Nähleuchte LED
H 1
XH1
BN
WH
+12V
0V
9 polige D-Sub
Buchse
Motor
X8
X3
GN
L1
L2
L3
GNGE
Inkrementalgeber
M1
Nähmotor
Tischgestell
Oberteil
9 poliger D-Sub
Stecker
X11B
X11B.1
X11B.2
5V
A
GN
WH
BN
XR1
R1
Poti
Hub/U/min
S1
Pedal
Sollwertgeber
X1B
X50
0 V
SSOUT
SSCLK
+24V
+5V
SSSTR
SSIN
LS1
YE
BR
A14
OTE
X1A
+24V
RxD
TxD
+5V
0V
RTS
CTS
0V
YE
GR
RD
BU
PK
GN
BK
A2
OPTION
Bedienfeld BDF S3A
Bedienfeld BDF P1
1
2
3
4
5
6

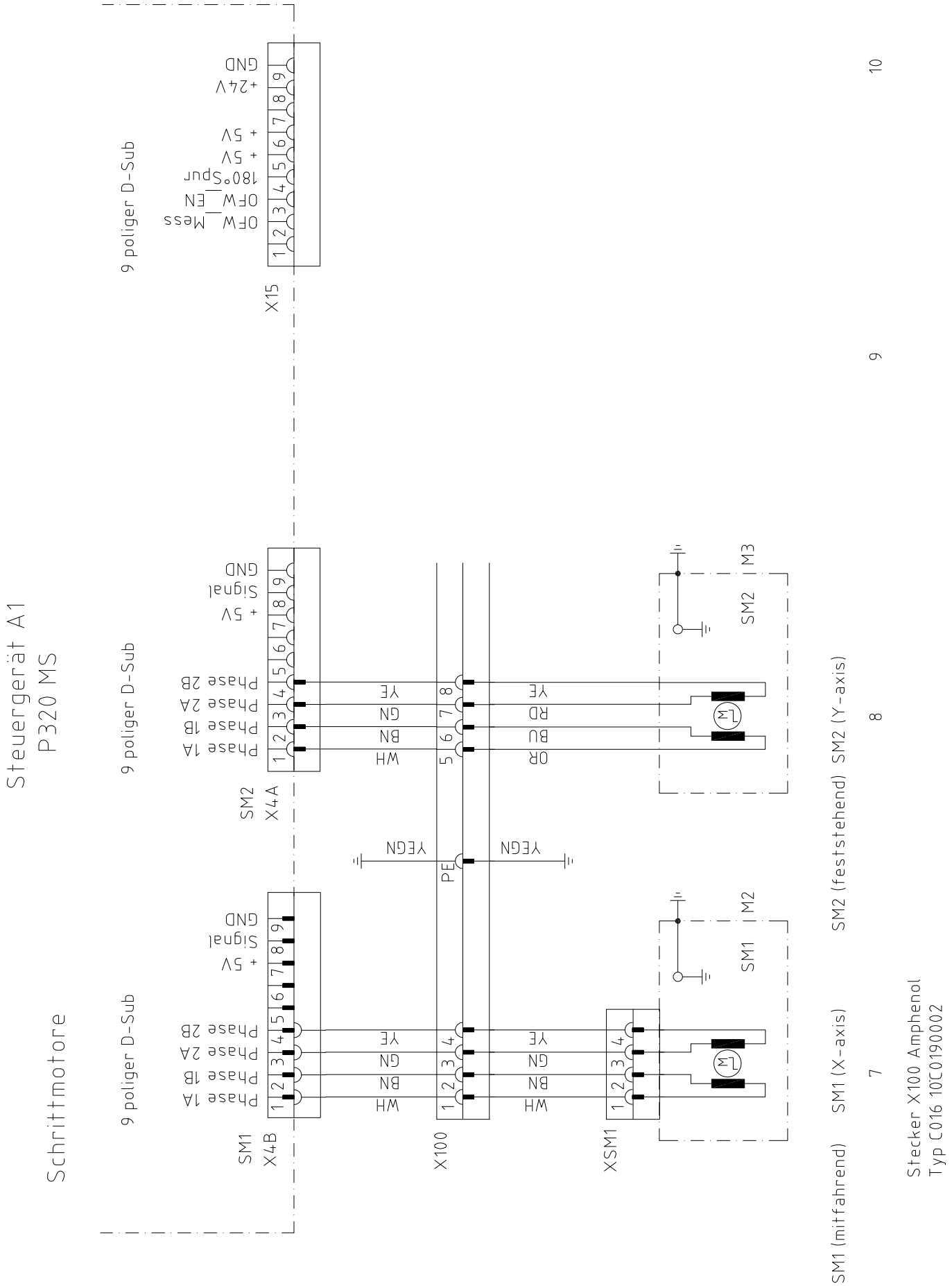
Steuergerät A1
P320 MS
Schrittmotore
9 poliger D-Sub
X15
OFW_Mess
OFW_EN
180°Spur
+ 5V
+ 5V
+24V
GND
SM2
X4A
Phase 1A
Phase 1B
Phase 2A
Phase 2B
+ 5V
Signal
GND
X100
PE
YEGN
WH
BN
GN
YE
OR
BU
RD
SM2
M3
SM1
X4B
XSM1
SM1
M2
SM1 (mitfahrend)
SM1 (X-axis)
SM2 (feststehend)
SM2 (Y-axis)
Stecker X100 Amphenol
Typ C016 10C0190002
10
9
8
7

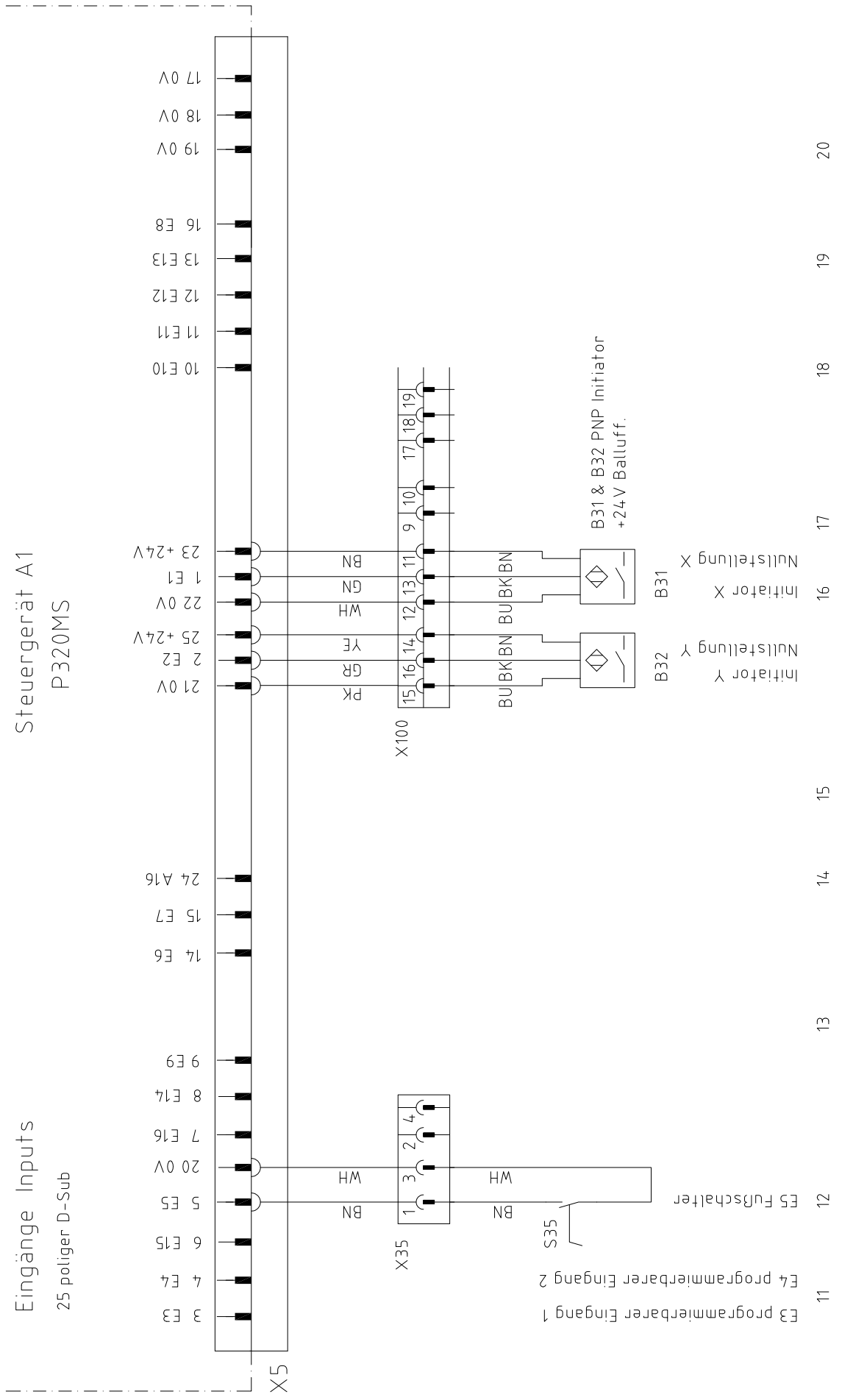
Steuergerät A1
P320MS
Eingänge Inputs
25 poliger D-Sub
X5
17 0V
18 0V
19 0V
16 E8
13 E13
12 E12
11 E11
10 E10
23 +24V
1 E1
22 0V
25 +24V
2 E2
21 0V
24 A16
15 E7
14 E6
9 E9
8 E14
7 E16
20 0V
5 E5
6 E15
4 E4
3 E3
X100
BN
GN
WH
YE
GR
PK
BU BK BN
BU BK BN
B31 & B32 PNP Initiator
+24 V Balluff.
B31
Initiator X
Nullstellung X
B32
Initiator Y
Nullstellung Y
X35
BN
WH
WH
BN
S35
E5 Fußschalter
E4 programmierbarer Eingang 2
E3 programmierbarer Eingang 1
11 12 13 14 15 16 17 18 19 20

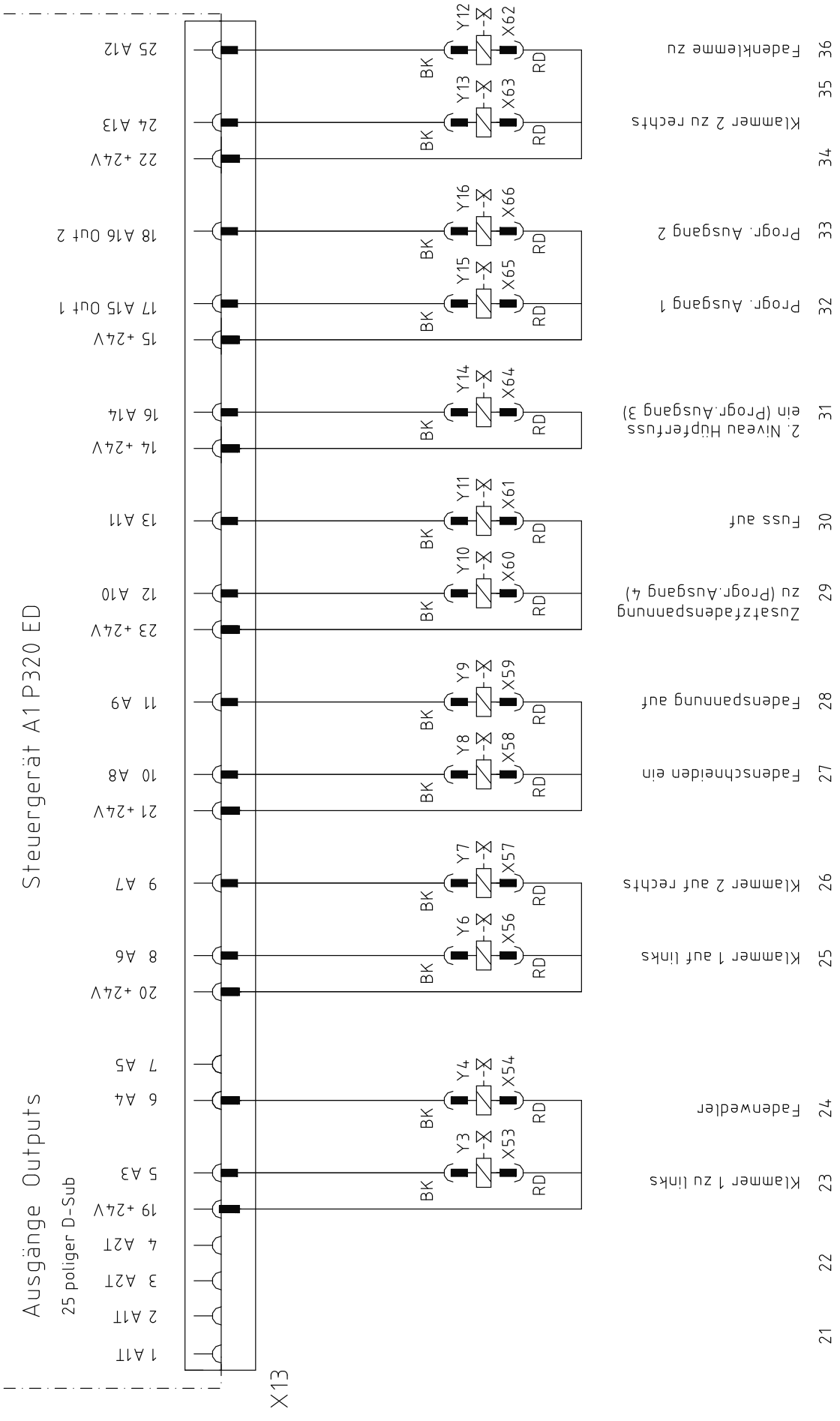
Steuergerät A1 P320 ED
Ausgänge Outputs
25 poliger D-Sub
X13
1 A1T
2 A1T
3 A2T
4 A2T
19 +24V
5 A3
6 A4
7 A5
20 +24V
8 A6
9 A7
21 +24V
10 A8
11 A9
23 +24V
12 A10
13 A11
14 +24V
16 A14
15 +24V
17 A15 Out 1
18 A16 Out 2
22 +24V
24 A13
25 A12
Klammer 1 zu links
Fadenwedler
Klammer 1 auf links
Klammer 2 auf rechts
Fadenspannung auf
Fadenschneiden ein
Zusatzfadenspannung zu (Progr.Ausgang 4)
Fuss auf
2. Niveau Hüpferfuss ein (Progr.Ausgang 3)
Progr. Ausgang 1
Progr. Ausgang 2
Klammer 2 zu rechts
Fadenklemme zu
21 22 23 24 25 26 27 28 29 30 31 32 33 34 35 36
BK RD

PFAFF® Industrial



Europäische Union
Wachstum durch Innovation – EFRE



PFAFF Industriesysteme
und Maschinen AG

Hans-Geiger-Str. 12 - IG Nord
D-67661 Kaiserslautern

Phone: +49-6301 3205 - 0
Fax: +49-6301 3205 1386
E-mail: info@pfaff-industrial.com

Hotlines:
Technical service: +49-175/2243-101
Application consultance: +49-175/2243-102
Spare-parts hotline: +49-175/2243-103

Printed in Germany

© PFAFF Industriesysteme und Maschinen AG 2009, PFAFF is the exclusive trademark of VSM Group AB.PFAFF Industriesysteme und Maschinen AG is an authorized licensee of the PFAFF trademark.