PFAFF® Industrial

3108 -1/1306 -1/1310 with BDF S3

INSTRUCTION MANUAL

This instruction manual applies to machines from serial number **2 774 709**, software version **0394/008** (3108-1/1310) and **0408/008** (3108-1/1306) onwards.

296-12-19 165/002
Betriebsanleitung engl. 03.11

The reprinting, copying or translation of PFAFF Instruction Manuals, whether in whole or in part, is only permitted with our previous authorization and with written reference to the source.

PFAFF Industriesysteme
und Maschinen AG

Hans-Geiger-Str. 12 - IG Nord
D-67661 Kaiserslautern

Contents ..... Chapter - Page

1	**Safety**	6
1.01	Directives	6
1.02	General notes on safety	6
1.03	Safety symbols	7
1.04	Important notes for the user	7
1.05	Notes for operating and technical staff	8
1.05.01	Operating staff	8
1.05.02	Technical staff	8
1.06	Danger warnings	9
2	**Proper use**	10
3	**Specifications**	11
4	**Disposal of Machine**	12
5	**Transportation, packing and storage**	13
5.01	Transportation to customer's premises	13
5.02	Transportation inside the customer's premises	13
5.03	Disposal of packing materials	13
5.04	Storage	13
6	**Explanation of symbols**	14
7	**Controls**	15
7.01	On/off switch	15
7.02	Foot switch	15
7.03	Control panel	16
7.03.01	Screen displays	16
7.03.02	Display symbols	17
7.03.03	Function keys	17
8	**Mounting and commissioning the machine**	19
8.01	Mounting	19
8.02	Mounting the spool holder	20
8.03	Commissioning	20
8.04	Switching the machine on/off	21
8.05	Check/adjust zero points	22
8.06	Adjusting the potentiometer for speed reduction	23
9	**Preparation**	24
9.01	Inserting the needle	24
9.02	Winding the bobbin thread, regulating the winder tension	25
9.03	Changing the bobbin / adjusting the bobbin thread tension	26
9.04	Threading needle thread/adjusting needle thread tension	27

Contents ..... Chapter - Page

9.05 Setting the lever pressure 28
9.06 Selecting a seam program 29
9.06.01 Selecting and changing the seam pattern 29
9.06.02 Selecting a program station. 30
9.06.03 Selecting a sequence 30
9.07 Adjusting the size of the sewing area 31
9.08 Setting up the bobbin thread counter 32
9.09 Resetting the piece counter 32
9.10 Shifting the seam pattern 33
9.11 Inserting and removing the SD-memory card 34

10 Sewing 35

10.01 Operating cycle 35
10.02 Display options 35
10.03 Sewing in the "Direct program selection" mode 35
10.04 Sewing in the "Program stations" mode 35
10.05 Sewing in the "Sequences mode". 36
10.05.01 **Interrupting a sequence** 36
10.06 Error messages 36

11 Input 37
11.01 Reserving program stations 37
11.02 Sequences 38
11.02.01 Entering sequences 38
11.02.02 Checking the sequence contents 38
11.02.03 Deleting sequences 39
11.02.04 Combining sequences 39
11.03 Parameter input 40
11.04 Access codes 41
11.04.01 Entering the access code 41
11.04.02 Changing the access code 41
11.04.03 Granting access rights 42
11.05 Program Management 43
11.05.01 Calling up the program management 43
11.05.02 Display of the data in the machine memory 44
11.05.03 Display of the data on the SD-memory card 45
11.05.04 Copying data onto the SD-memory card 46
11.05.05 Copying data into the machine memory 47
11.05.06 Deleting data in the machine memory 48
11.05.07 Deleting data from the SD-memory card 49
11.05.08 Formatting the SD-memory card 50

12 Care and maintenance 51
12.01 Servicing and maintenance intervals 51

Contents ..... Chapter - Page

12.02	Cleaning the machine	51
12.03	Lubricating	52
12.04	Lubricate clamp drive	53
12.05	Cleaning the blower air filter	54
12.06	Checking/regulating the air pressure	55
12.07	Emptying/cleaning the water bowl of the air filter/regulator	55
13	**Adjustment**	**56**
13.01	Notes on adjustment	56
13.02	Tools, gauges and other accessories for adjusting	56
13.03	Abbreviations	56
13.04	Explanation of the symbols	56
13.05	Adjusting the sewing head	57
13.05.01	Basic position of the balance wheel (adjustment aid)	57
13.05.02	Preliminary adjustment of the needle height	58
13.05.03	Needle rise, hook clearance and needle height	59
13.05.04	Reversing point of hopping foot	60
13.05.05	Hopping foot lift	61
13.05.06	Adjusting hopping foot pressure	62
13.05.07	Adjusting hopping foot height	63
13.05.08	Regulating the level of the hopping foot	64
13.05.09	Bobbin winder	65
13.05.10	Thread check spring and thread regulator	66
13.05.11	Lubrication	67
13.05.12	Basic position of the thread trimmer	68
13.05.13	Control cam to roller lever clearance (resting position)	69
13.05.14	Adjusting the control cam	70
13.05.15	Knife pressure	71
13.05.16	Manual cutting test	72
13.05.17	Aligning the clamp drive	73
13.05.18	Adjusting belt tensions	74
13.06	Parameter list	75
13.07	Internet update of the machine software	79
13.07.01	Update with null modem cable	79
13.07.02	Update with SD-card	80
13.08	Error message explanations	82
13.08.01	General errors	82
13.08.02	Error in production mode	82
13.08.03	Error during output switching	83
13.08.04	Error in production mode	83
13.08.05	Sewing motor errors	84
13.08.06	OTE-errors	85
13.08.07	Stitch generation errors	86
14	**Circuit diagrams**	**87**

1 Safety

1.01 Directives

This machine was built in accordance with the European regulations stated in the Conformity and Manufacturer's Declaration.
In addition to this Instruction Manual, also observe all generally accepted, statutory and other regulations and legal requirements - also those of the country in which the machine will be operated - and all valid environmental protection regulations!
Applicable local regulations of the social insurance society for occupational accidents or other supervisory organizations are to be strictly adhered to!

1.02 General notes on safety

- This machine must only be operated by adequately trained operators and only after having completely read and understood the Instruction Manual!
- All Notes on Safety and Instruction Manuals of the motor manufacturer are to be read before operating the machine!
- The Danger and Safety Instructions on the machine itself are to be followed!
- This machine must only be used for the purpose for which it is intended and must not be operated without its safety devices. All applicable safety regulations must be observed.
- When leaving the machine unattended and during maintenance work, the machine must be disconnected from the power supply by operating the main switch or by removing the plug from the mains!
- Daily maintenance work must only be carried out by appropriately trained personnel!
- When carrying out servicing or repair work on pneumatic devices, the machine must be disconnected from the pneumatic supply network! The only exceptions to this are adjustment work and functional tests carried out by appropriately trained personnel!
- Repair work and special maintenance work must only be carried out by specialists or appropriately trained personnel!
- Work on electrical equipment must only be carried out by appropriately trained specialist personnel!
- Work is not permitted on parts and equipment which are connected to the power supply! Exceptions to this are contained in the regulations EN 50110.
- Modifications and alterations to the machine must only be carried out pursuant to all relevant safety regulations!
- Only spare parts which have been approved by us are to be used for repairs! We expressly point out that any replacement parts or accessories not supplied by us have not been tested and approved by us. The installation and/or use of any such products may result in negative changes to the constructional characteristics of the machine. We are not liable for any damage which may be caused by non-original parts.

1.03 Safety symbols



Danger!
Special points to observe.



Danger of injury to operating or technical staff!



Caution

Do not operate without finger guard and safety devices.

Before threading, changing bobbin and needle, cleaning etc. **switch off main switch**.

1.04 Important notes for the user

- This instruction manual belongs to the equipment of the machine and must be available to the operating staff at all times.
- This instruction manual must be read before the machine is operated for the first time.
- Both operating and technical staff must be instructed on the safety devices of the machine and on safe working methods.
- It is the duty of the user to operate the machine in perfect running order only.
- The user must ensure that none of the safety devices are removed nor put out of working order.
- The user must ensure that only authorized persons operate and work on the machine.

For further information please refer to your PFAFF agency.

1.05 Notes for operating and technical staff

1.05.01 Operating staff

Operating staff are the persons responsible for setting up, operating and cleaning the machine and for eliminating any malfunctioning in the sewing area.

The operating staff is obliged to observe the following points:

- The notes on safety in this instruction manual must always be observed!
- Any working methods, which adversely affect the safety of the machine, must be avoided!
- Loose-fitting clothing should be avoided. No jewellery, such as chains and rings, should be worn!
- Ensure that only authorised persons enter the danger area of the machine!
- Any changes occurring on the machine, which may affect its safety, must be reported to the user immediately.

1.05.02 Technical staff

Technical staff are persons who have been trained in electrical engineering/electronics and mechanical engineering. They are responsible for lubricating, servicing, repairing and adjusting the machine.

The technical staff is obliged to observe the following points:

- The notes on safety in this instruction manual must always be observed!
- Before carrying out any adjustment or repair work the main switch must be switched off and measures taken to prevent it from being switched on again!
- Never work on parts or equipment still connected to the power supply! Exceptions are only permissible in accordance with the regulations EN 50110.
- All safety covers must be replaced after the completion of maintenance or repair work!

1.06 Danger warnings

A working area of 1 m must be kept free both in front of and behind the machine, so that easy access is possible at all times.

Never put your hands in the sewing area during sewing!
Danger of injury by the needle!

Never leave objects on the table while adjusting the machine settings! Objects can become trapped or be slung away! Danger of injury by hurled objects!

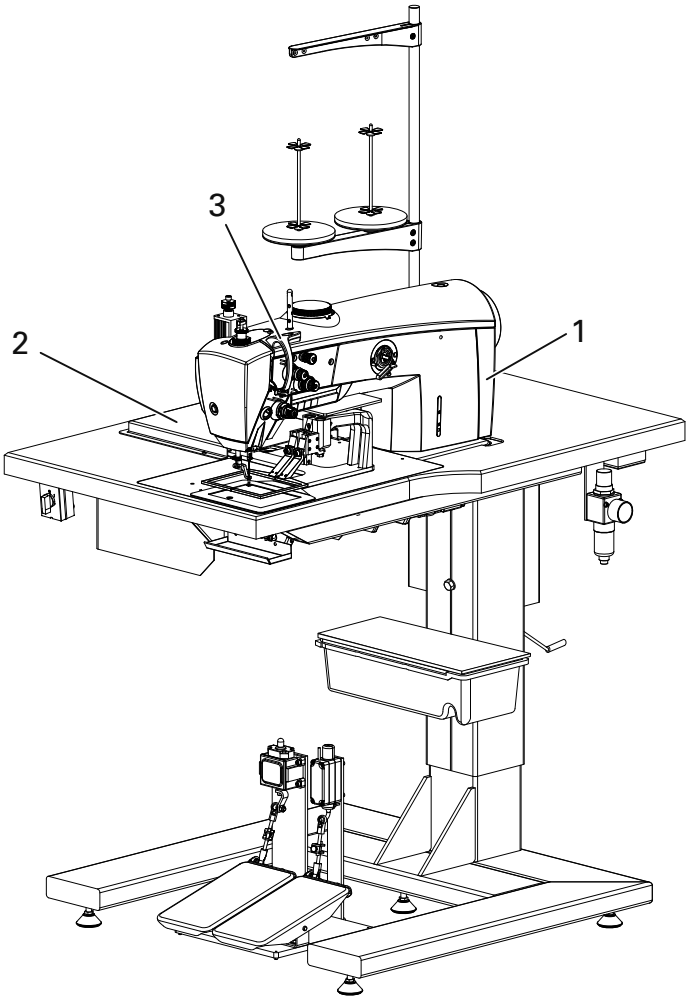

Fig. 1 - 01

Do not operate the machine without the protective covers 1 and 2!
Danger of crushing between moving parts of the pneumatic and/or transport devices.

Do not operate the machine without take-up lever guard 3!
Danger of injury by the movement of the take-up lever!

2 Proper use

The machines **3108-1/1306** and **3108-1/1310** are small area backtack automats for the production of backtack and assembly seams in the shoe, leather, plastic, and automotive industry.



Any and all uses of this machine which have not been approved of by the manufacturer are considered to be inappropriate! The manufacturer cannot be held liable for any damage caused by the inappropriate use of the machine! The appropriate use of the machine means that all operational, adjustment, maintenance and repair measures required by the manufacturer are to be observed!

3 Specifications▲

Max. sewing speed:.....2800 s.p.m.
Max. stitch length: .....0,1 - 12 mm
Stitch type:.....301 (lockstitch)

Needle system:.....134-35 KK
Needle size ..... 80 – 160

Operating voltage: .....230 V ± 10%, 50/60 Hz, A/C
Power requirement: .....2.2 kW
Leakage current ..... ≤ 5 mA◆

Control range:
3108-1/1306..... 130 x 60 mm
3108-1/1310..... 130 x 100 mm
Storage capacity:: .....25.000 stitches

Min. working pressure: ..... min. 4,5 - max. 6 bar
Air consumption:.....approx. 15l/cycle

Max. hopping foot lift: .....9 mm
Max. through-passage under clamp: .....20 mm

Machine dimensions:
Length:..... approx. 1035 mm
Width: .....approx. 800 mm
Height: ..... approx. 1180 mm
Table height:.....840 mm

Net weight: .....150 kg

Ambient temperature
85% rel. humidity (condensation not permitted): ..... 5 – 40° C

Noise data
Emission sound pressure level at the workplace
at a sewing speed of 3000 spm ..... L_{pA} < 81 dB(A)■
(Noise measurement in acc. with DIN 45 635-48-A-1, ISO 11204, ISO 3744, ISO 4871)

▲ Subject to alteration

◆ Due to the use of network filters there is a nominal leakage current of ≤ 5 mA.

■ K_{pA} = 2,5 dB

4 Disposal of Machine

- Proper disposal of the machine is the responsibility of the customer.
- The materials used for the machine are steel, aluminium, brass and various plastic materials. The electrical equipment comprises plastic materials and copper.
- The machine is to be disposed of according to the locally valid pollution control regulations; if necessary, a specialist ist to be commissioned.



Care must be taken that parts soiled with lubricants are disposed of separately according to the locally valid pollution control regulations!

5 Transportation, packing and storage

5.01 Transportation to customer‘s premises

The machines are delivered completely packed.

5.02 Transportation inside the customer‘s premises

The manufacturer cannot be made liable for transportation inside the customer‘s premises nor to other operating locations. It must be ensured that the machines are only transported in an upright position.

5.03 Disposal of packing materials

The packing materials of this machine comprise paper, cardboard and VCE fibre. Proper disposal of the packing material is the responsibility of the customer.

5.04 Storage

If the machine is not in use, it can be stored as it is for a period of up to six months, but It should be protected against dust and moisture.
If the machine is stored for longer periods, the individual parts, especially the surfaces of moving parts, must be protected against corrosion, e.g. by a film of oil.

6 Explanation of symbols

In this instruction manual, work to be carried out or important information is accentuated by symbols. These symbols have the following meanings:

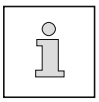

Note, information



Cleaning, care



Lubrication

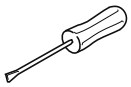

Maintenance, repairs, adjustment, service work
(only to be carried out by technical staff)

7 Controls

7.01 On/off switch

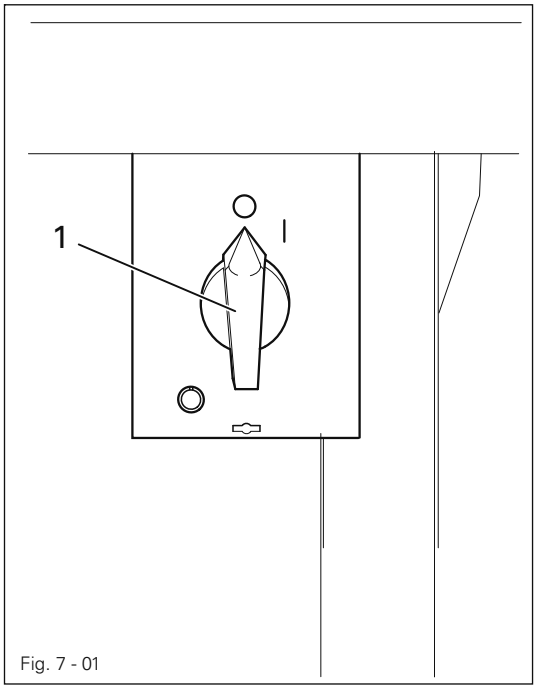

Fig. 7 - 01

- By turning on/off switch **1**, the power supply to the machine is switched on or off.

7.02 Foot switch

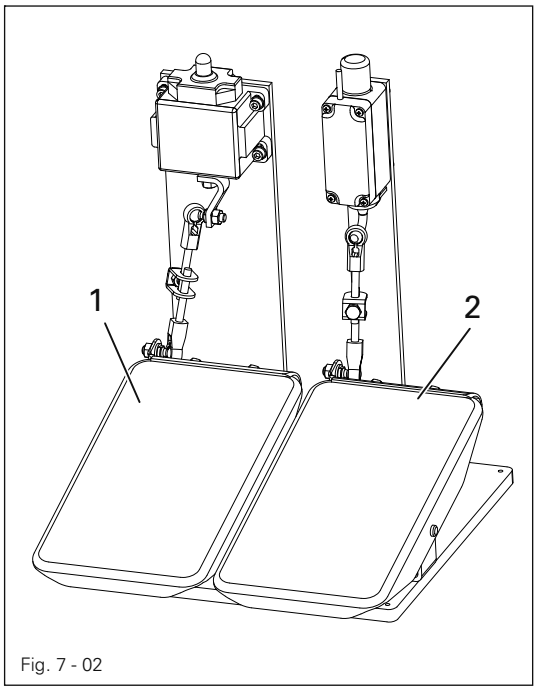

Fig. 7 - 02

- Foot switches **1** and **2** have the following functions:

Foot switch 1:

+1 = left clamp up/down

Foot switch 2:

+1 = right clamp up/down

+2 = sewing start

7.03 Control panel

The control panel is used to select seam programs, call up machine functions, change parameters, control the different operating modes, as well as for reading error signals and service settings.

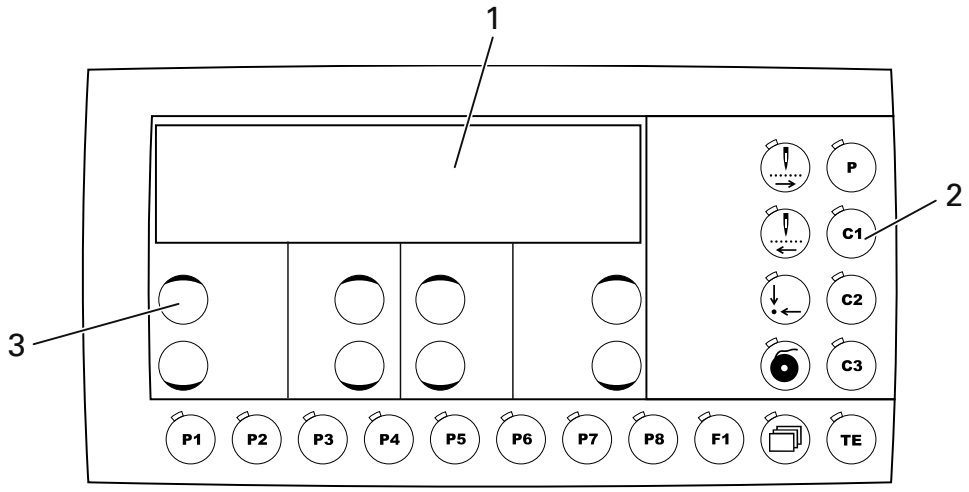

Fig. 7 - 04

The control panel consists of display screen 1 with the function keys described below. The display 1 consists of a two-row alphanumerical LCD display with 16 symbols per row. The function keys 2 are located below and to the right of the display screen. The status of the function keys and the machine operating modes are shown with LEDs in the corresponding keys. Every time the function keys 2 are operated, a key tone sounds as confirmation of the input. If the input required is invalid, e.g. because the max. permissible value for the parameter input has been reached, a double tone is audible. An SD-card reader for data transfer is integrated.

7.03.01 Screen displays

Depending on the operating mode, on the screen 1 information is shown about the machine status, program selection, sequence program progress, input parameters, as well as error signals (also see Chapter 11 Input).

- Depending on the operating mode, relevant data is displayed in combination with the appropriate symbol or text, and can be altered directly.
- When the parameters are entered, the number of the parameter selected is shown with the corresponding parameter value, see Chapter 11.03 Parameter input.
- If faults occur in the sewing operation, a corresponding error signal appears in the display, see Chapter 13.08 Error messages on the display.

7.03.02 Display symbols

	Program number
	Speed
X	Size factor X-direction (crosswise) in %
Y	Size factor Y-direction (lengthwise) in %
	Bobbin thread counter / piece counter
	Enter
	Machine memory
	SD-memory card

7.03.03 Function keys

The functions keys described below are used essentially to switch machine functions on and off. When the function is switched on, the **diode in the key is illuminated**.
If a corresponding value has to be fixed for the activated function, this can be carried out with the corresponding **+/- keys 3**.

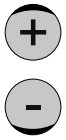

By pressing and holding the corresponding **+/- key**, firstly the numerical value displayed above it is altered slowly. If the **+/- key** is pressed longer, the numerical value changes more quickly. The respective **+/- keys** shown opposite are described below.



Menü
This function is used in the respective operating mode to scroll within the existing menus.



Wind
The bobbin thread winding function is called up, see Chapter **9.03 Winding the bobbin thread.**



Basic position
Work clamp and needle are positioned in the basic position and , if necessary, the thread trimming function is activated.



Tacting backwards
Each time the key is pressed, the selected seam program is sewn stitch by stitch in reverse, and the coordinates for each stitch are shown on the control panel.



Tacting forwards

Each time the key is pressed, the selected seam program is sewn forwards stitch by stitch, and the coordinates for each stitch are shown on the control panel.



to



Program stations

The function keys P1 to P8 are used to enter and select seam programs, see Chapter 9.06.02 Selecting the program station.



Direct program selection

This function is used to select a seam pattern. After selection, speed, stitch length and size can be altered, see Chapter 9.06.01 Selecting and altering the seam pattern.

Sequences



to



The function keys C1 to C3 are used to enter and select sequences, see Chapter 9.06.03 Selecting a sequence.

TE



In the sewing mode, this key is used to change to the input mode. In the input mode this key is used to acknowledge the input of program stations and sequences, and to change into the sewing mode.

8 Mounting and commissioning the machine

After unpacking the machine, check it for any transport damage. In case of damage, inform the shipping company and the responsible PFAFF dealer.

The machine must only be mounted and commissioned by qualified personnel!
All relevant safety regulations are to be observed!

8.01 Mounting

At the machine's location, there must be a stable and horizontal surface as well as suitable electricity and compressed air supplies (see chapter 3 Specifications).

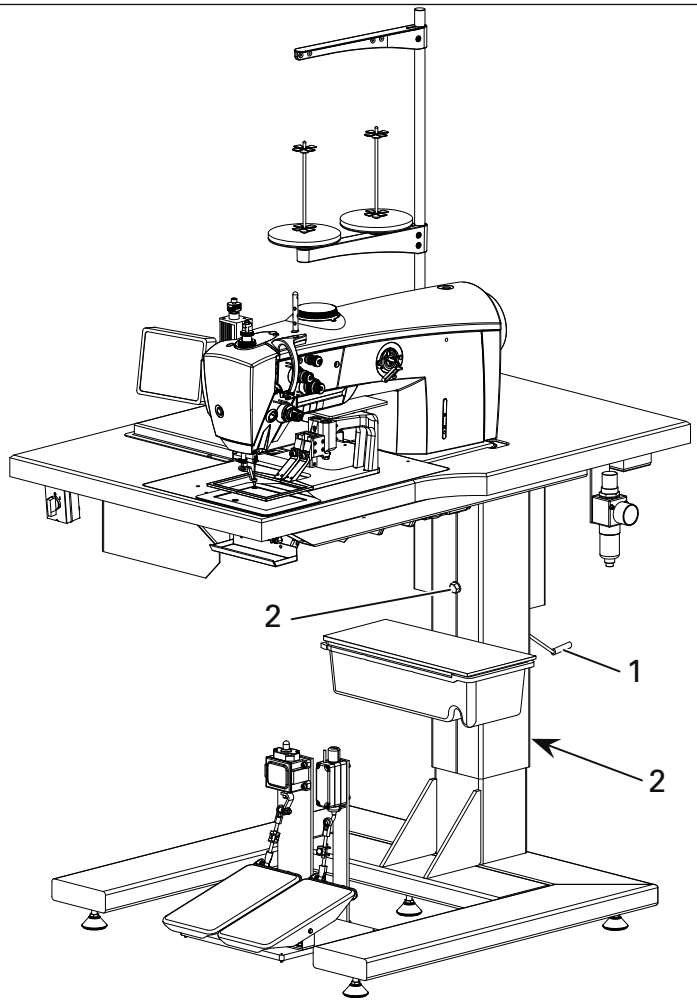

Fig. 8 - 01

- Lift the machine with a forklift from the shipping pallet.
- Level the machine just above the ground, and adjust the feet accordingly.
- The table height can be adjusted at crank 1 after loosening screws 2.

8.02 Mounting the spool holder

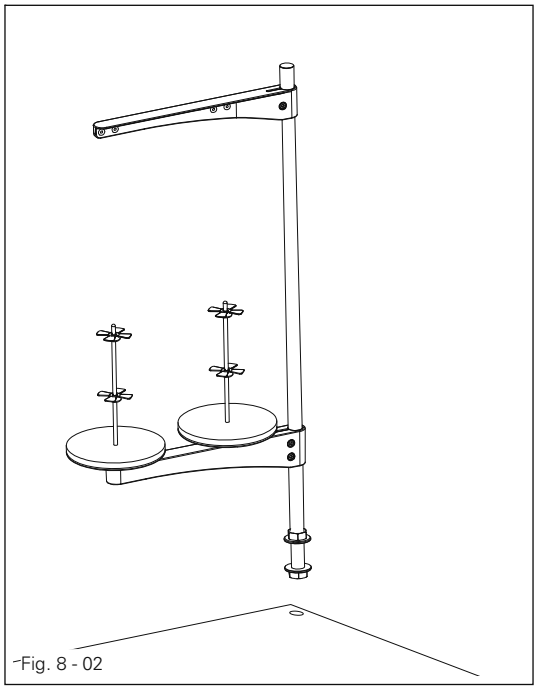

Fig. 8 - 02

- Mount the spool holder according to Fig. 8.02.

8.03 Commissioning

- Before commissioning the machine, clean it thoroughly and lubricate it, or pour in oil, see Chapter 12 Care and Maintenance!
- The machine, in particular the electric wires and pneumatic connection tubes, must be examined for any damage.
- Have skilled personnel check if the machine can be operated with the available mains voltage.



Do not operate the machine if there is any discrepancy.



The machine may only be connected to an earthed socket!

- Connect machine to the compressed air system.
  The manometer on the air filter/lubricator unit must display a pressure of 6 bar.
  If necessary, set to the correct value (see chapter 12.05 Checking / regulating air compression).

8.04 Switching the machine on/off

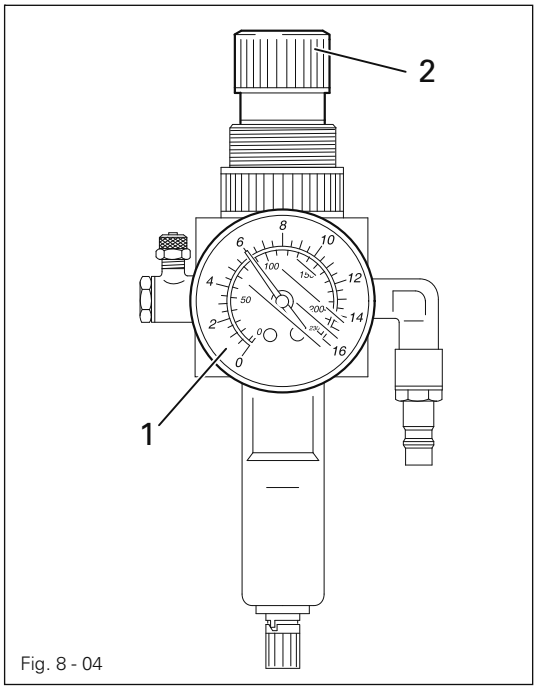

Fig. 8 - 04

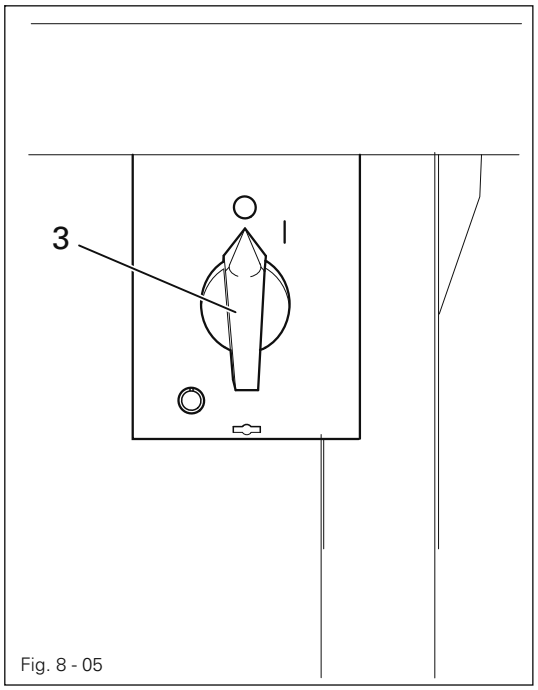

Fig. 8 - 05

- Check air pressure on pressure gauge **1** and, if necessary, adjust air pressure with adjusting knob **2**.
- Turn main switch **3** to position "I"

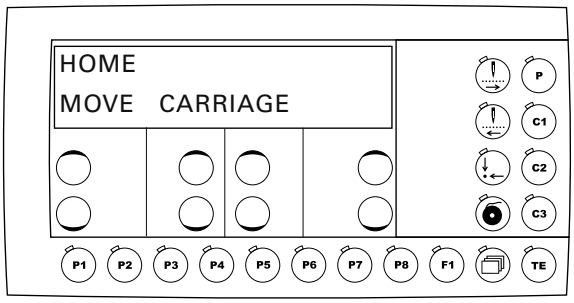

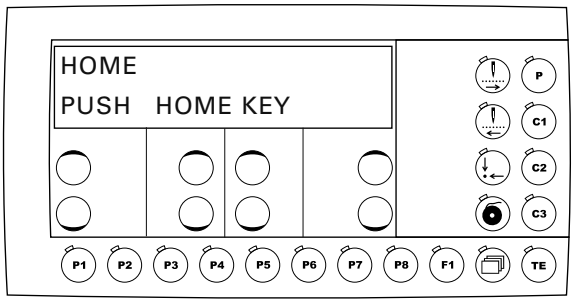

- The machine will drive into home position after the controls have been booted.
  In programs with obstacles, the prompt "**HOME MOVE CARRIAGE**SDSq, and the clamp will have to be moved to the home position by hand (= needle in the rear left corner of the clamp).



- After shifting the clamp manually, press the "**Basic position**" button.
- Carry out a test run, see Chapter **10 Sewing.**



At first commissioning of the machine, the zero points and the potentiometer for motor speed reduction must be checked and set (see chapter **8.05** and **8.06**).

- To switch off the machine, turn main switch **3** to position "**0**".

8.05 Check/adjust zero points

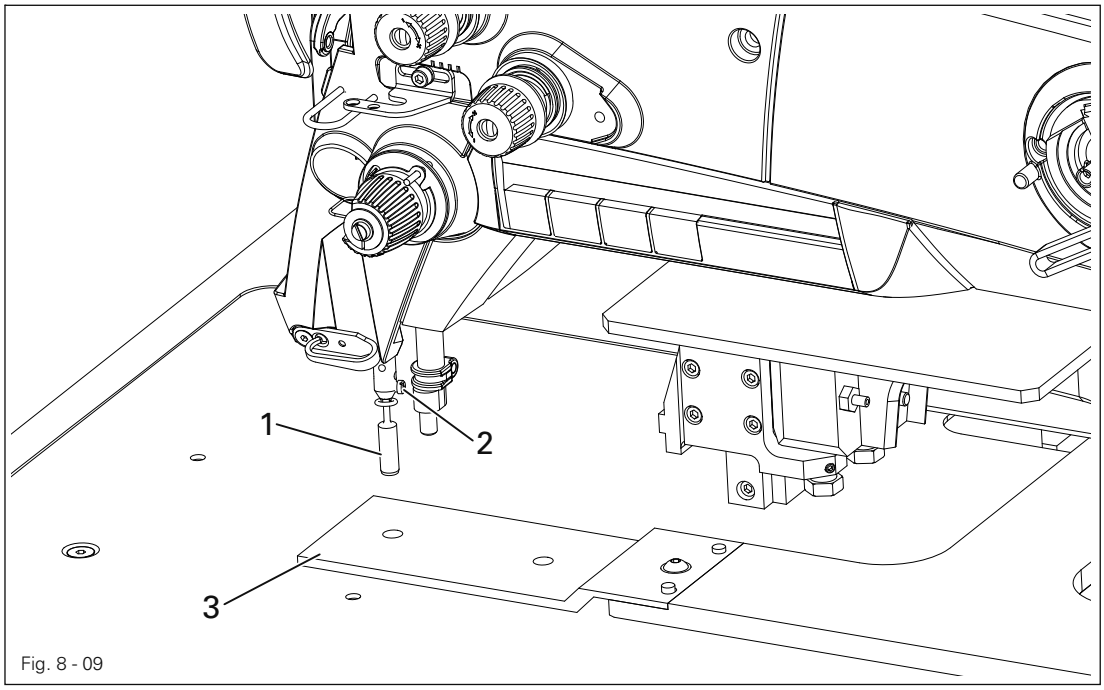

Fig. 8 - 09

Before commissioning the machine, or after changing the controller or one of the initiators of the clamp drive, it is necessary to set the zero points.

- Unscrew material presser foot.
- Insert adjustment pin **1** into the needle bar and secure using screw **2**.
- Screw on clamp setting gauge **3** (Order No. **95-295 500-05**).

TE
- Call up input mode (LED lights up).
- Call up parameter '**608**' by pressing the relevant **+/- button**.
- Enter the access code if available - see chapter **11.04.01 Input access code**.

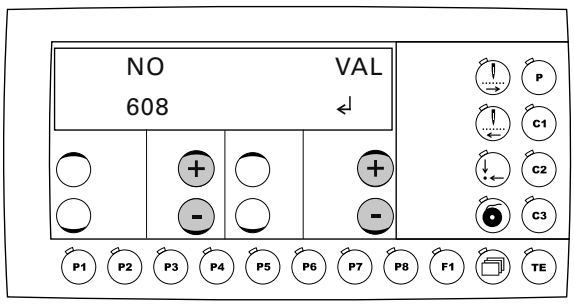

↵
- Confirm the code input with the relevant **+/- button**.

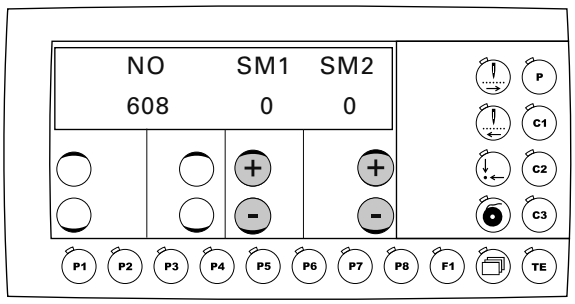

- Turn the handwheel to check whether adjustment pin **1** can be inserted into the adjustment hole on gauge **3**.
- Where required, adjust the position of the clamp by changing the **SM1** + **SM2** accordingly.
- Release screw **2** and remove adjustment pin **1**.
- Unscrew setting gauge **3**.



- Finish input by pressing the button **TE**.

8.06 Adjusting the potentiometer for speed reduction

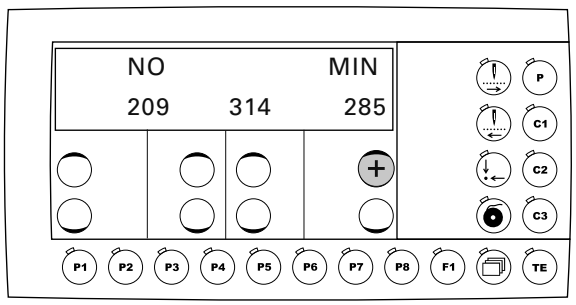

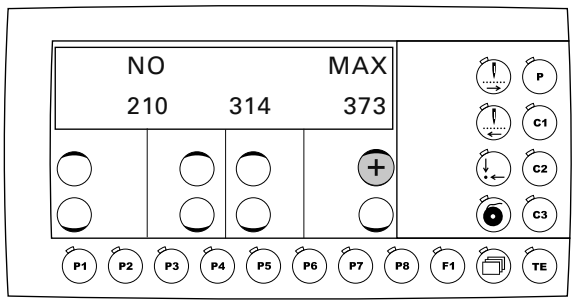

- Switch machine on.
- Set lowest lift "**0**" on the setting wheel.
- Call up parameter "**209**" and press button "**D+**" to store the lower value.
- Set highest lift "**9**" on the setting wheel.
- Call up parameter "**210**" and press button "**D+**" to store the upper value.

9 Preparation

All regulations and instructions in this Instruction Manual are to be observed!
Special attention is to be paid to the safety regulations!

All preparation work is only to be carried out by appropriately trained personnel!

9.01 Inserting the needle

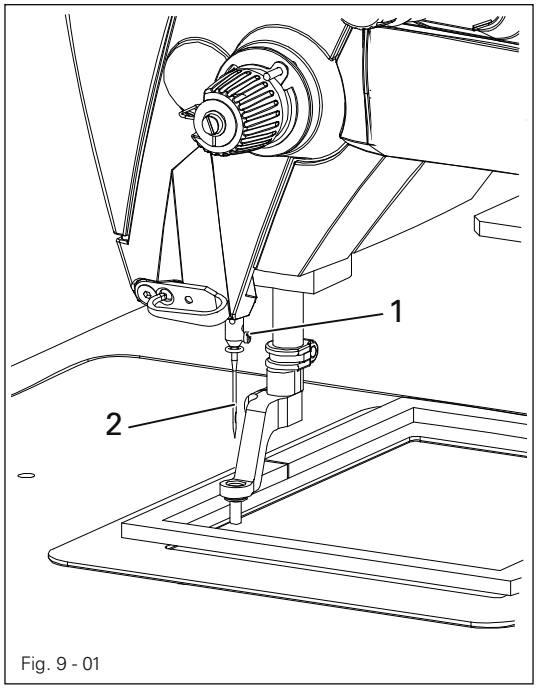

Fig. 9 - 01

Only use needles from the system intended for the machine, see Chapter **3 Specifications.**

- Switch on the machine.
- Call up the threading aid function.
  Machine moves to thread-in position, sewing start is disengaged.
  (when clamping with obstacles, the clamp must be pushed manually into thread-in position).
- Loosen screw **1** and insert needle **2** as far as possible into the needle bar.
- Adjust needle **2** so that the long needle groove is pointing in the direction of the top cover of the sewing head, and tighten screw **1**.
- Move the machine to its basic position

9.02 Winding the bobbin thread, regulating the winder tension

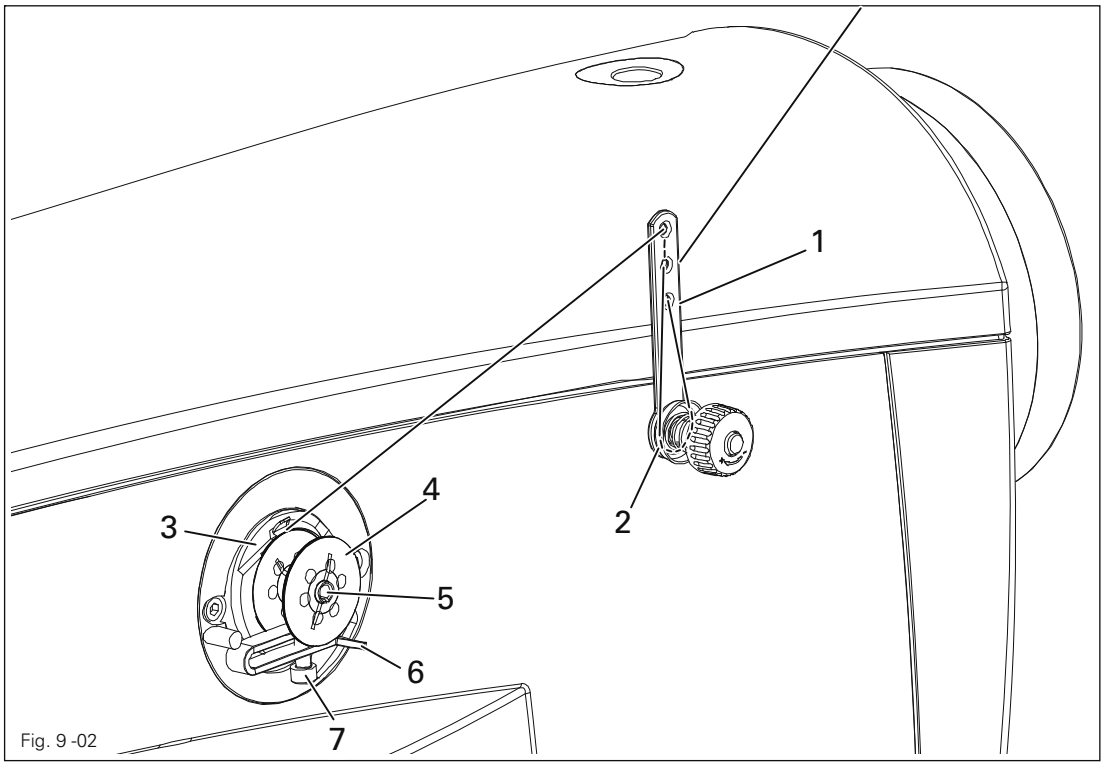

Fig. 9 -02

- Draw the thread from the reel stand through guide hole **1** into the bobbin winder tension unit **2** and then behind the thread clamp **3**.
- Cut off the thread in thread clamp **3**. The thread is retained.
- Place empty bobbin **4** on the bobbin winder spindle **5**.
- To switch on the bobbin winder, push up lever **6**.

The bobbin is wound during sewing.

- The bobbin winder stops automatically, when the bobbin **4** is filled sufficiently.
- Remove full bobbin **4** and cut off the thread in thread clamp **3**.
- The tension of the thread on bobbin **4** can be adjusted on the bobbin winder tension unit **2**.
- The volume of thread on bobbin **4** can be adjusted with screw **7**.
- If separate winding is required, proceed as follows:
- Call up bobbin winding function.
- Start the winding function using the treadle or the sewing start button.

9.03 Changing the bobbin / adjusting the bobbin thread tension

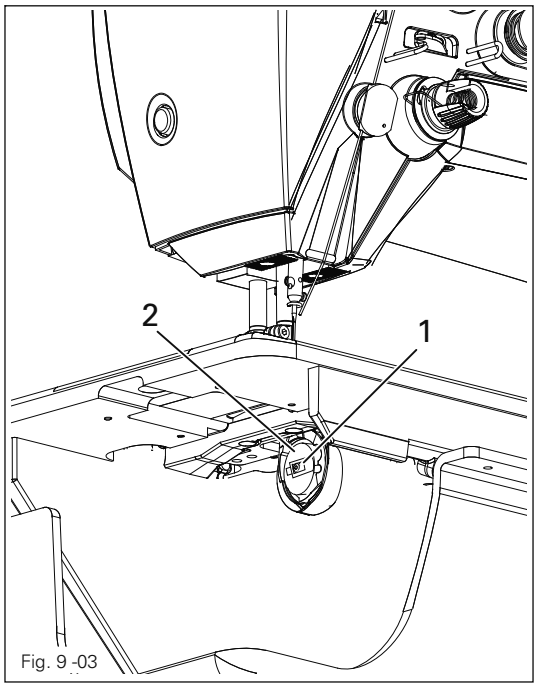

Fig. 9 -03

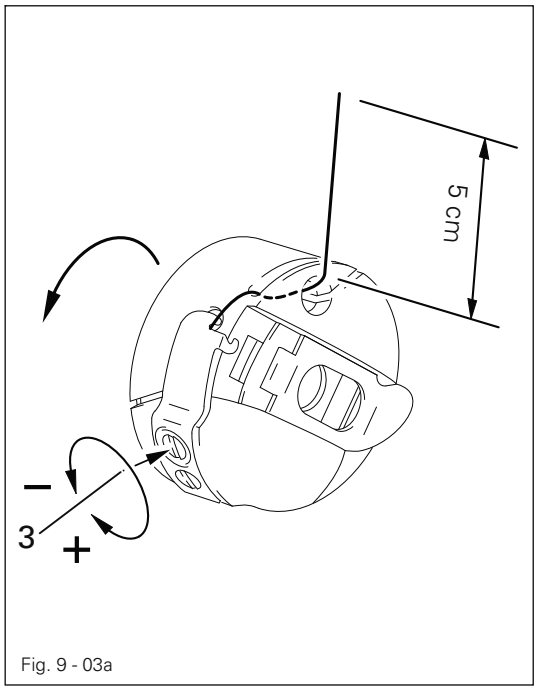

Fig. 9 - 03a

F1

- Call up the threading aid function.
  Machine moves to thread-in position, sewing start is disengaged.
- Raise lever **1** and remove bobbin casing **2**.
- Place the filled bobbin into the hook so that it turns in the direction of the arrow when thread is pulled off.
- Close lever **1**.
- Pass the thread through the slot under the spring according to Fig. **9 - 03**a.
- Adjust the thread tension by turning screw **3**.
- Move the machine to its basic position

9.04 Threading needle thread/adjusting needle thread tension

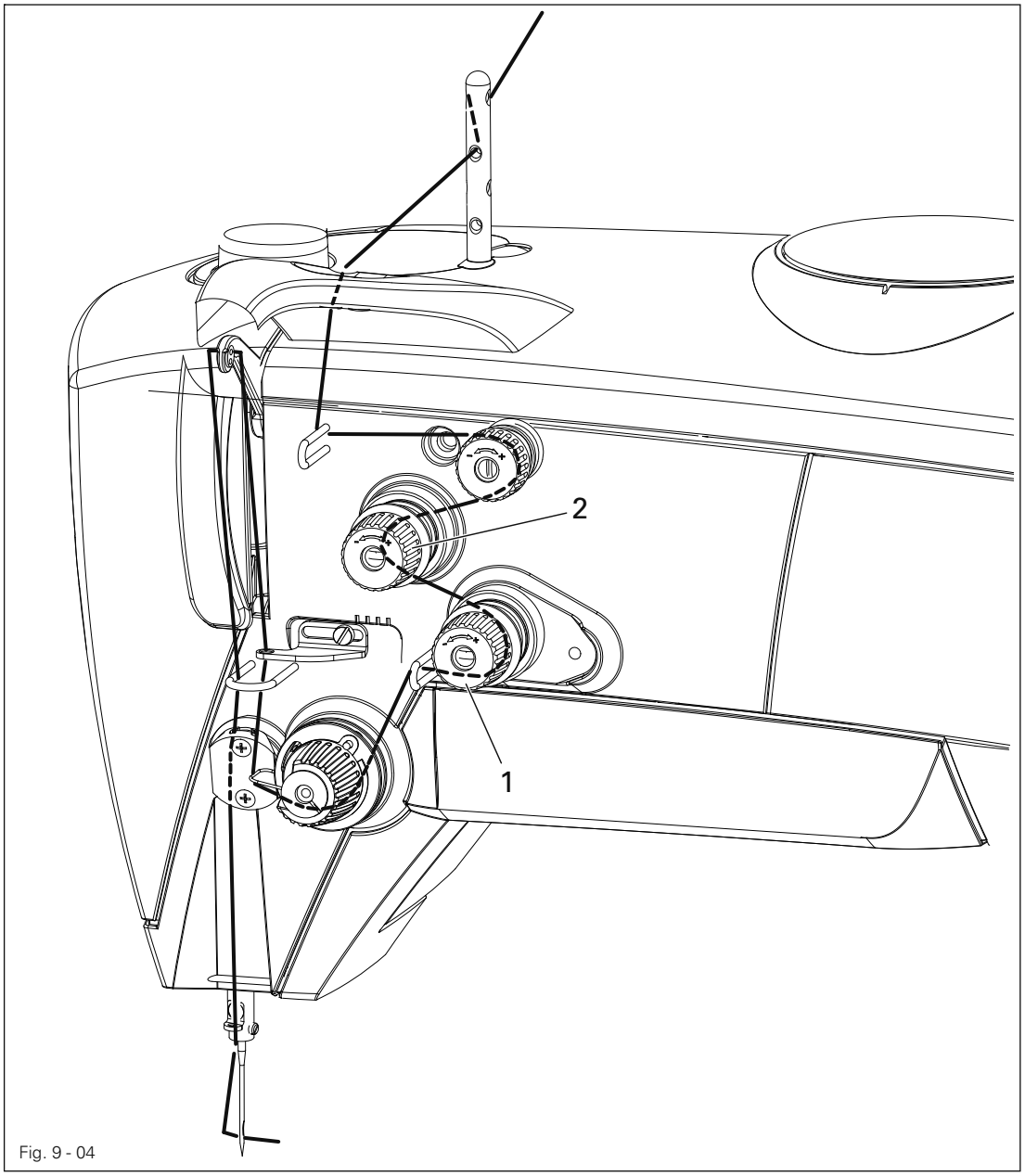

Fig. 9 - 04

- Switch on the machine.

F1

- Call up the threading aid function.
  Machine moves to thread-in position, sewing start is disengaged.
- Thread the machine as shown in Fig. 9 - 04.
- Regulate the needle-thread tension by turning milled screw 1.

Secondary tension is regulated by turning the knurled thumb screw.

- Move the machine to its basic position

9.05 Setting the lever pressure



Fig. 9 -05

- The lever pressure must be adjusted to the respective material to ensure perfect material feed.
- The max. lever pressure must not exceed **0.25** MPa.
- The lever pressure is adjusted at knob **1**.

9.06 Selecting a seam program

After the machine has been switched on, it is in its basic position and offers various possibilities for selecting seam programs.

- Direct selection of the seam pattern and its individual adaptation by changing the speed and stitch length.
- Selection of the seam program via a program station. For this purpose a seam pattern with its respective speed and corresponding size factors must have been stored previously.
- With the selection of a sequence several seam programs are sewn after each other. For this purpose a sequence must have been compiled beforehand from individual seam pro grams (program stations).

9.06.01 Selecting and changing the seam pattern

P ● Switch on programme selection (LED lights up)

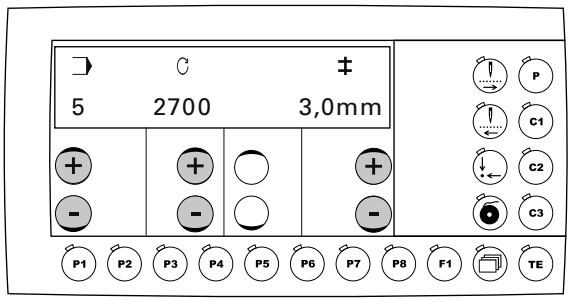

● Select the desired seam pattern with the corresponding +/- key.

● Select the desired speed with the corresponding +/- key.

● Select the desired stitch length with the corresponding +/- key.

TE ● To conclude the input, press the TE key or operate the pedal forwards (machine changes to the sewing mode).

9.06.02 Selecting a program station.



- With the machine in its basic position, select the desired program station, e.g. **P3**.

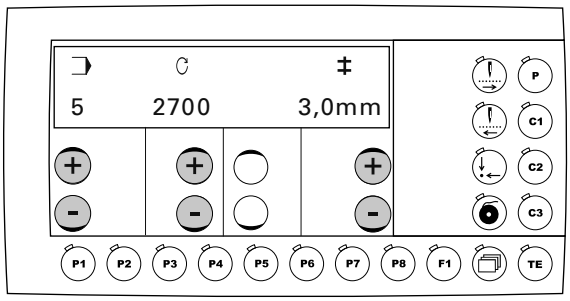



Only those program stations can be selected, which have been reserved previously with a seam pattern with its respective speed and size factors, see Chapter **11.01 Reserving program stations**.



Speed and size factors cannot be changed directly in a seam program selected via a program station.

9.06.03 Selecting a sequence



- With the machine in its basic position, select the desired sequence, e.g. **C2**.

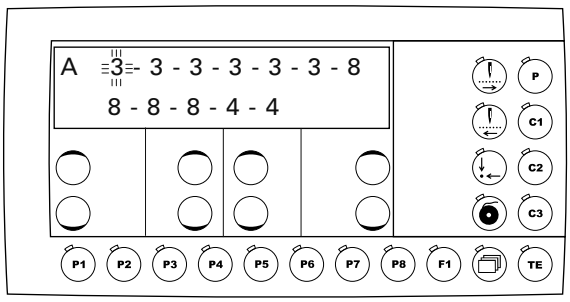



IThe next seam program waiting to be sewn is depicted by the relevant flashing entry.
Sequences can only be called up if they have been created beforehand (see Chapter **11.02**.01 **Enter sequences**).

9.07 Adjusting the size of the sewing area

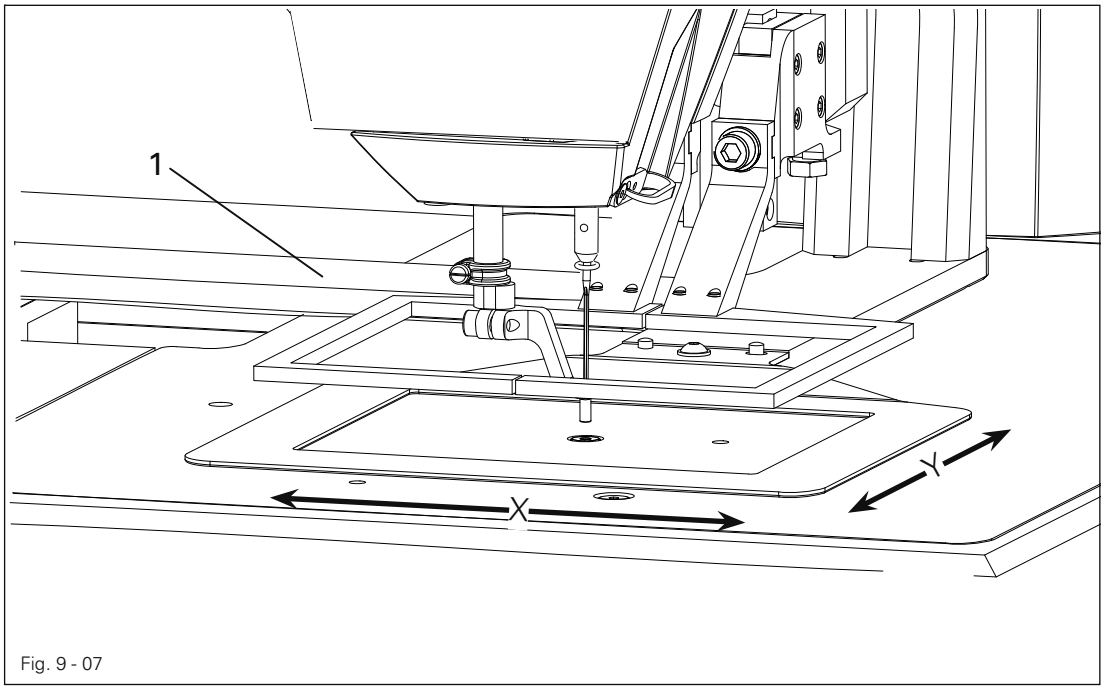

Fig. 9 - 07

A comparison between the sewing area size entered and the actual sewing area size of the work clamp ensures that seam programs, which are not within the sewing area size, cannot be sewn.

If the actual and the entered sewing area size do not concur with each other, severe damage can be caused to the machine!

- Measure the sewing area size of work clamp **1**.
- TE
- With the machine in its basic position, select the input mode. (LED is illuminated).
- Call up parameters "**201 - 204**" in sequence by pressing the relevant **+/- button**.
- Enter the access code if available - see chapter **11.04.01 Input access code**.
- Enter the measured value via the relevant parameter (in **1/10 mm**)

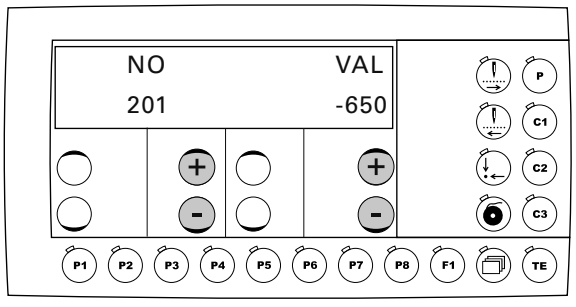

Parameter	**201**	=	Min. X-Coordinate (**-650** bis **0**)
	202	=	Max. X-Coordinate (**0** bis **650**)
	203	=	Min. C-Koordinate (**-1000** bis **0**)
	204	=	Max. C-Koordinate (**-1000** bis **0**)

- TE
- Finish the parameter input and switch to sewing mode (home position of the machine).

9.08 Setting up the bobbin thread counter



- With the machine in its basic position, select the input mode.
- With the corresponding **+/- key** select parameter "**004**".
- If required, enter the access code, see Chapter **11.04.01 Entering the access code**.

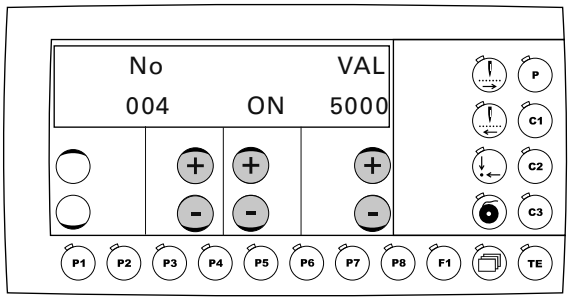

- With the corresponding **+/- key** switch on the bobbin thread counter.
- With the corresponding **+/- key** enter the number of stitches to be sewn.



- Conclude the input by pressing the **TE key.** (Machine changes to the sewing mode).

9.09 Resetting the piece counter



In the sewing mode (basic position of the machine) the piece counter or the bobbin thread counter can be displayed by pressing the **menu key**. (When the bobbin thread counter is switched off, the piece counter is displayed - Selection under parameter **004**) .

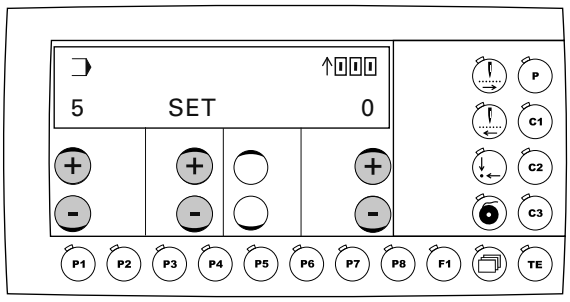

The piece counter counts from **0** onwards and differs from the bobbin thread counter in the display through the upwards pointing arrow.

- Reset the piece counter with the corresponding **+/- keys**.

9.10 Shifting the seam pattern

To adapt the seam patterns to formed workpiece holders, selected seam patterns can be shifted.



- From the basic position of the machine select the desired program station, e.g. **P1.**



- Tact through the seam pattern, e.g. forwards.
  The actual coordinates are shown together with the shift values for each stitch.

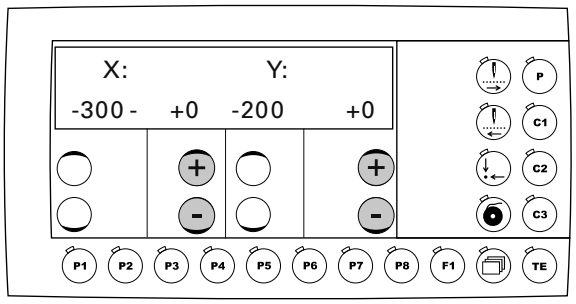

- With the corresponding **+/- keys** it is possible to enter a shift value for the entire seam pattern in X- or Y-direction at each seam pattern coordinate.



The seam pattern shift is allocated to the respective actual program station and is deleted when the program number is changed.

9.11 Inserting and removing the SD-memory card

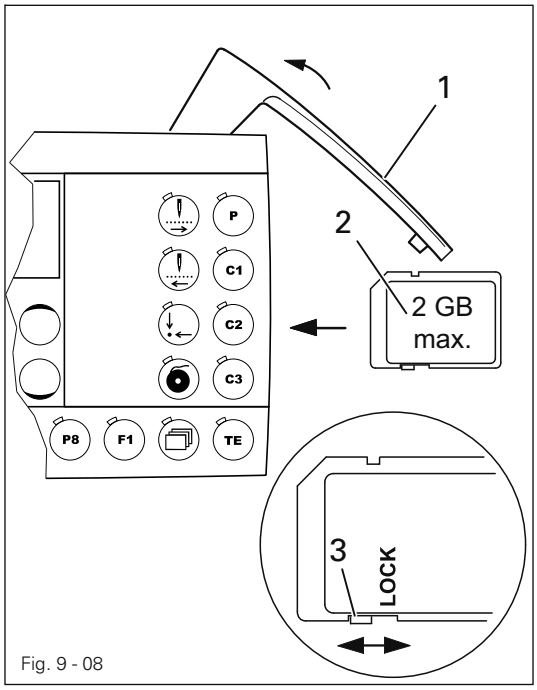

Fig. 9 - 08

Inserting the SD-memory card

- Open cover 1.
- Insert SD-memory card 2 into the card slot with the label at the front.
- Close cover 1 again.

Use only memory cards formatted FAT 16

Removing the SD-memory card

- Open cover 1.
- Press the edge of the SD-memory card 2 lightly – the SD-card is ejected.
- Close cover 1 again.

By moving slide 3 it is possible to activate (position "LOCK") or deactivate the write protection function of the SD-memory card. To store, process or delete data on the SD-memory card, the write protection function must be deactivated.

10 Sewing

The machine must be installed, connected and set up as described in Chapter 8 Installation and Commissioning.

The machine must not be operated without the safety devices 1 to 5, see Chapter 1.06 Danger warnings! Danger of injury!

10.01 Operating cycle

- Carry out all steps in accordance with Chapter 9 Setting up.
- Place the material properly under the work clamp.
- Lower the work clamp and start the sewing cycle, see Chapter 7.02 Pedal.

10.02 Display options

By pressing the button "Menu", the operator can switch between four different displays while sewing.

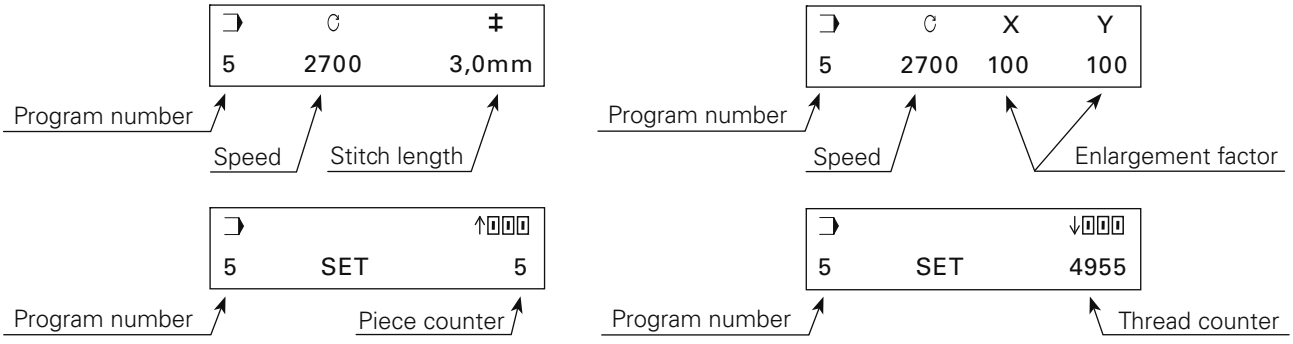

10.03 Sewing in the "Direct program selection" mode

In this function, a seam pattern is selected. After selection, the speed and stitch length can be altered, see Chapter 9.06.01 Selecting and changing the seam pattern.

10.04 Sewing in the "Program stations" mode

Program stations can be selected, which have been reserved beforehand with a seam pattern with relevant speed and size factors, see Chapter 11.01 Reserving program stations.

10.05 Sewing in the "Sequences mode".

Sequences, which have been created beforehand, can be called up with the function keys **C1** to **C3** (see Chap. **11.02.01 Entering sequences**)

10.05.01 Interrupting a sequence

If an interruption occurs during a sequence cycle (e.g. broken thread), it is possible to continue at the same sequence point after the error has been eliminated.
The procedure is as follows:

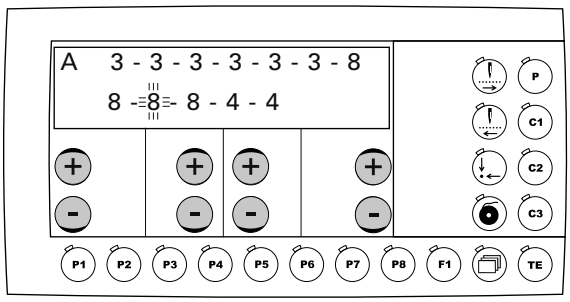

- The activated sequence point flashes.
- Select the sequence **A, B** or **C** by pressing the left **+/- key**.
- Press the corresponding **+/- key** to move to the sequence point to be repeated.
- Conclude input by pressing the **TE key**.



10.06 Error messages

When an error occurs, the text "ERROR" appears on the display together with an error code and short instructions. In addition the diode in the memory card slot lights up red (see arrow). An explanation of the error codes can be found in the Chapter **13.08 Error message explanations**.

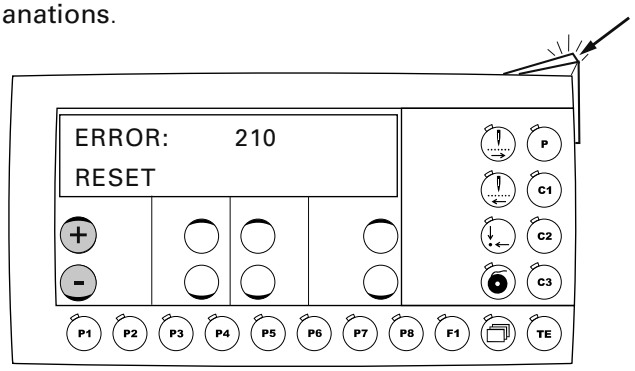

- Correct the error.
- Acknowledge the correction of the error by pressing the corresponding **+/- key** or by switching the machine off and on.
- The diode in the memory card slot (see arrow) turns yellow again

11 Input

After the machine has been switched on, it is in the input mode. The LED in the "TE" key is illuminated. The input mode is used to reserve program stations, to enter sequences and to change machine parameters. In addition information and input possibilities for the service area are available in this mode.

11.01 Reserving program stations

P1 to P8 The station keys P1 to P8 are used to enter and select seam programs. A complete seam program is configured from the following parameter:

- seam pattern
- speed
- size factor in X-direction
- size factor in Y-direction

TE ● Call up the input mode by pressing the TE key (LED is illuminated).

P1 to P8 ● Press a station key to call up the direct seam pattern selection function.

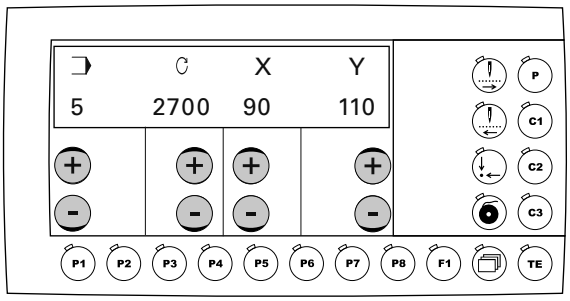

● With the corresponding plus/minus key select the desired seam pattern, e.g. 5. The seam patterns are stored in the machine under program numbers, see Chapter 11.05 Summary of the seam patterns.

● Select the desired speed with the corresponding +/- key.

X ● Enter the desired size factor (in %) (X-direction) with the corresponding +/- key.

Y ● Enter the desired size factor (in %) (Y-direction) with the corresponding +/- key.

The enlargement of the seam pattern is limited by the size of the machine's sewing area.

TE ● Conclude the input by pressing the TE key. (The machine changes to the sewing mode).

11.02 Sequences

11.02.01 Entering sequences

C1 to C3 The sequence program keys **C1** to **C3** are used to enter and select sequence programs. The sequence programs are put together from seam programs, which have been deposited under the station keys **P1** to **P8**.
A sequence can consist of up to **3** segments (**A, B** + **C**). In each segment up to **14** entries can be made.

TE ● Call up the input mode by pressing the **TE key** (LED is illuminated).

C2 ● In the input mode, select the desired sequence program key, e.g. **C2**.

P3 ● Enter the desired seam programs in any order by using the station keys, e.g. **P3** six times ,

P8 **P8** four times,

P4 **P4** twice

2x TE Press the **TE key** input twice (machine changes to the sewing mode).

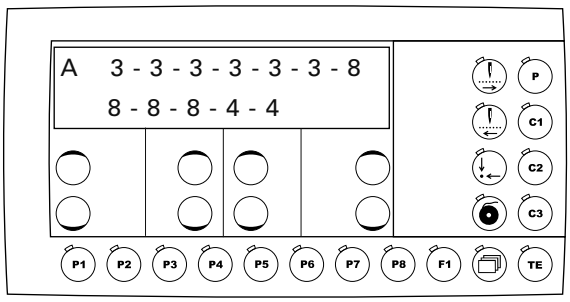

The station keys for selection must have been reserved beforehand, see Chapter **11.01 Reserving program stations**.

In the "Input" mode it is possible to scroll between the sequence zones **A, B** and **C** by pressing the **Menu key**.

11.02.02 Checking the sequence contents

C2 ● With the machine in its basic position, select the desired sequence, e.g. **C2**.
● The activated sequence point flashes.
● Press the corresponding **+/- key** to move to the sequence point to be checked (e.g. 8).

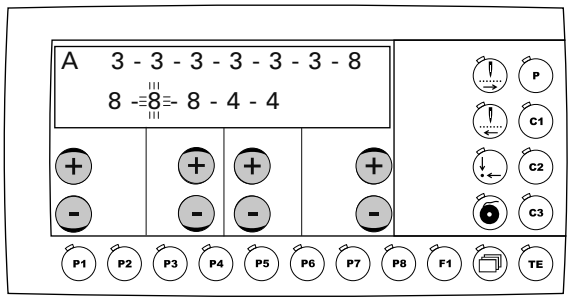

TE ● Press the TE key (LED is not illuminated).

● The parameters, such as number of the seam pattern, speed and size factors of the flashing sequence entry are shown if the Menu key is pressed.

2x ● Quit the check mode by pressing the Menu key twice.

11.02.03 Deleting sequences

TE ● Call up the Input mode by pressing the TE key (LED is illuminated).

C1 to C3 ● Call up the sequence to be changed by pressing the C1, C2 or C3 keys.

Deleting individual entries

● Press a +/- key to set the cursor beneath the entry to be deleted and delete the entry by pressing the reverse tacting key twice.

Inserting individual entries

● Press a +/- key to set the cursor beneath the position for the insertion.

P1 to P8 ● Insert the desired entry by pressing the corresponding station key.

Deleting a complete sequence

● Press a +/- key to set the cursor at the beginning of the sequence. Press the reverse tacting key as often as necessary to delete all entries on the display.

2x TE ● Press the TE input key twice (machine changes to the sewing mode).

11.02.04 Combining sequences

Several sequences can be combined to one seam program. To carry out the adjustment, enter the corresponding value for parameter 005 (see Chapter 13.08 List of parameters).

11.03 Parameter input

TE

- Press button **TE** (LED lights up.

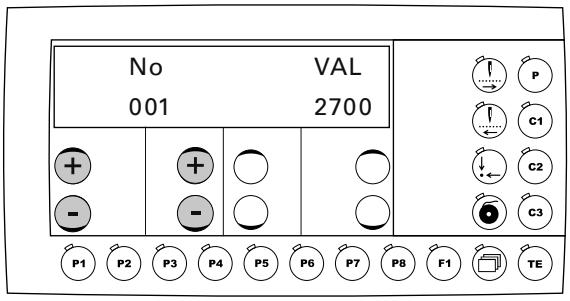

- With the corresponding **+/- key** select the desired parameter, e.g. **016** key tone ON/ OFF

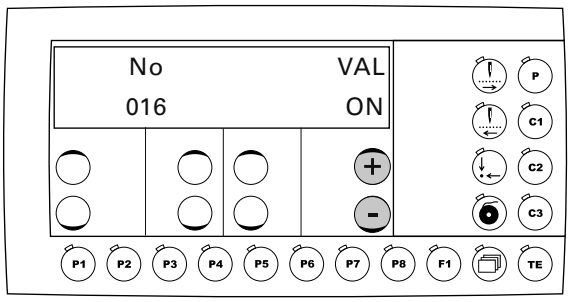

- With the corresponding **+/- key** activate key tone.

TE

- Conclude the input by pressing the **TE key**. (The machine changes to the sewing mode).

There is a list explaining all the parameters in Chapter **11.06 List of parameters**.

11.04 Access codes

The selection of seam patterns, the reservation of the program stations, the input of sequences and the selection of individual parameter levels can be locked with a 4-figure access code. The access code can be changed as desired. The factory set access code is "3108".

11.04.01 Entering the access code

If, in the input mode, a function is selected, which has an access code, the demand for entering the access code appears on the display.

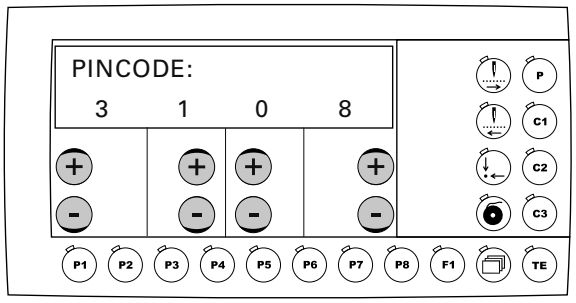

- Enter the access code with the corresponding +/- keys.



- Conclude the input by pressing the TE key (machine changes to the sewing mode).



Once the access code has been entered, all functions with access protection are freely accessible, until the machine is switched off.

11.04.02 Changing the access code

- In the input mode, select parameter "811"
- Enter the access code, see Chapter 11.04.01 Entering the access code

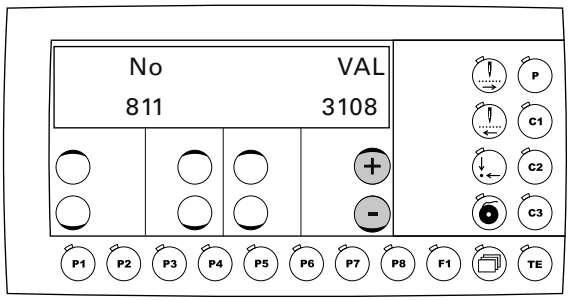

- Change the access code with the corresponding +/- keys.



- Conclude the input by pressing the TE key (machine changes to the sewing mode).

11.04.03 Granting access rights

- In the input mode select the corresponding parameter ("**801**" to "**806**"), see Chapter **13.06 List of parameters**.
- If required, enter the access code, see Chapter **11.04.01 Entering access codes**.

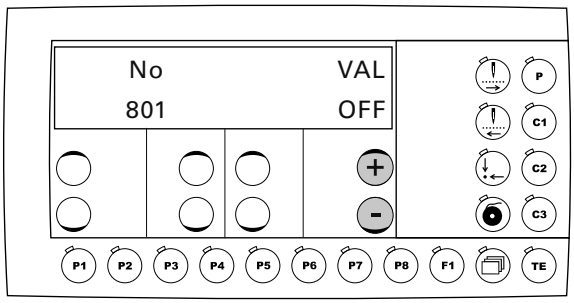

- With the corresponding **+/- key** approve (on) or lock (OFF) access..



- Conclude the input by pressing the **TE key** (machine changes to the sewing mode).

11.05 Program Management

IIn the program management the programs filed in the machine memory or on connected SD-memory cards are displayed and can be deleted or copied. Commercially available SD-memory cards with a storage capacity of max. 2 GB can be inserted in the control panel. The data is stored in machine-relevant sub-directories. The way to insert or remove the SD-memory card is described in Chapter **9.11**

- The programs **0 – 99** are stored in the files **0 – 99** and
- the machine data in the file **MD**.

Should the SD-memory cards need to be formatted by the PC, they must be formatted in the format "FAT**16**". Alternatively the SD-memory cards can also be formatted on the corresponding machine with the formatting function, see Chapter **11.05.08 Formatting the SD-memory card.**

11.05.01 Calling up the program management

- Switch on the machine.



- Call up the program management

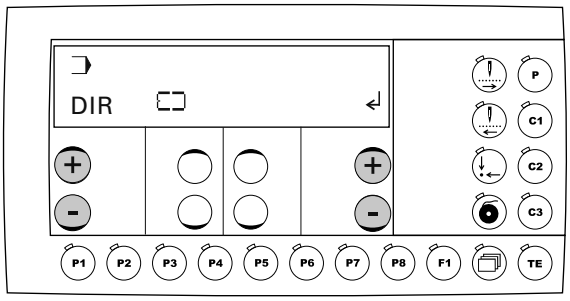

After the program management has been called up, the first menu item appears (display of data in the machine memory).
Confirm the selection of the menu item with the "Enter" function by pressing the right **plus key**. In this example the contents of the machine memory are then displayed.
It is possible to scroll through the other menu points by pressing the left +/- key (see following chapters).

The following menu items are available in the program management:

- Display data in the machine memory
- Display data on the connected SD-memory card
- Copy data to the SD-memory card
- Copy data to the machine memory (from the SD-memory card)
- Delete data in the machine memory
- Delete data on SD-memory card
- Format SD-memory card

11.05.02 Display of the data in the machine memory

- Call up the program management, see Chapter **11.05.01 Calling up the program management**.

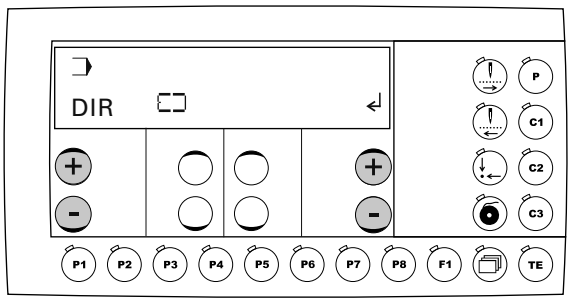

- Press the left **+/- keys** until the corresponding menu item appears.
- Confirm the selection of the menu item with the "Enter" function by pressing the right **plus key**.

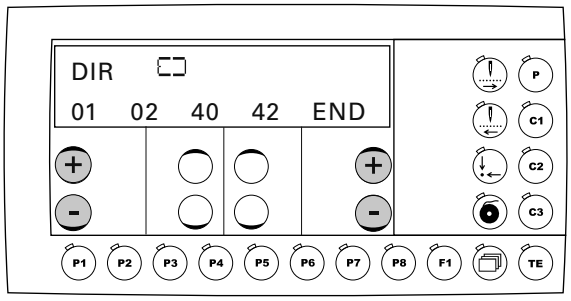

- By pressing the right **+/- keys** it is possible to scroll through the display of the machine memory.
- When the left **+/- keys** are pressed, the other menu items of the program management are called up.

11.05.03 Display of the data on the SD-memory card

- Call up the program management, see Chapter **11.05.01 Calling up the program management**.

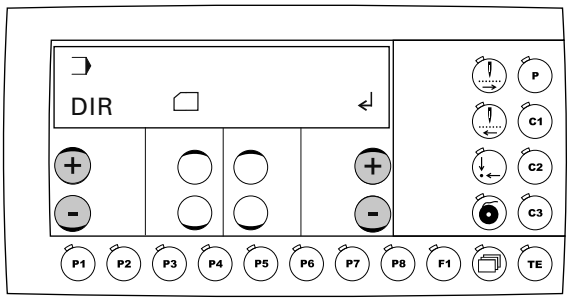

- Press the left **+/- keys** until the corresponding menu item appears.
- Confirm the selection of the menu item with the "Enter" function by pressing the right **plus key**.

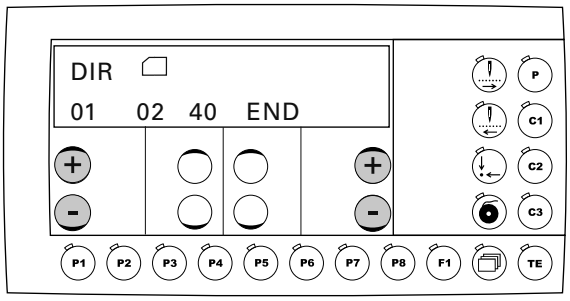

- By pressing the right **+/- keys** it is possible to scroll through the display of the SD-memory card.
- When the left **+/- keys** are pressed, the other menu items of the program management are called up.

11.05.04 Copying data onto the SD-memory card

- Call up the program management, see Chapter **11.05.01 Calling up the program management**.

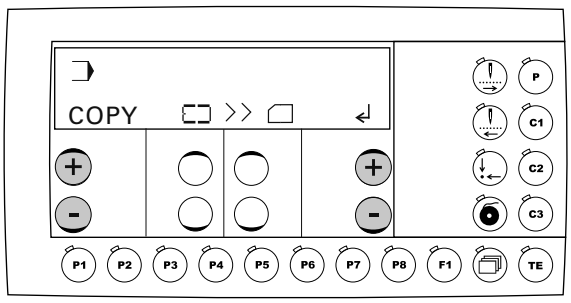

- Press the left **+/- keys** until the corresponding menu item appears.
- Confirm the selection of the menu item with the "Enter" function by pressing the right **plus key**.

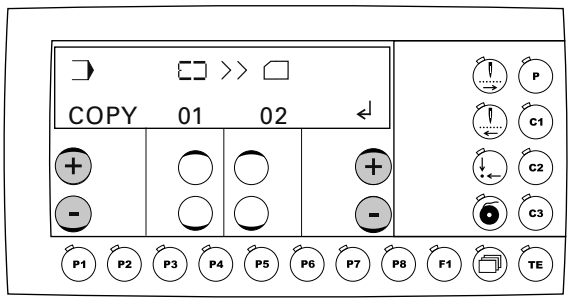

- Press the corresponding **+/- keys** to select the data to be copied from the machine memory onto the SD-memory card:

MD	=	machine parameters
0 - 99	=	programs
ALL	=	all programs

- The copying process is started with the "Enter" function by pressing the right **plus key**.

If the data for copying already exists, a safety enquiry appears before overwriting the data. Press the right **plus key** to confirm the copying process. The copying process can be stopped by pressing the right **minus key**.

- When the left **+/- keys** are pressed, the other menu items of the program management are called up.

11.05.05 Copying data into the machine memory

- Call up the program management, see Chapter **11.05.01 Calling up the program management**.

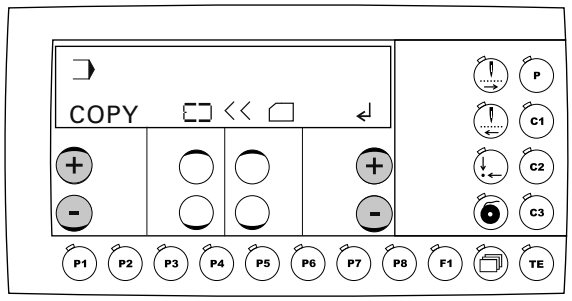

- Press the left **+/- keys** until the corresponding menu item appears.
- Confirm the selection of the menu item with the "Enter" function by pressing the right **plus key**.

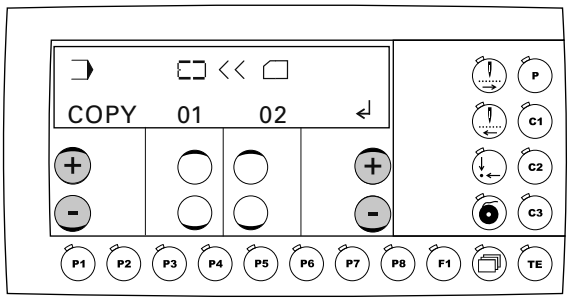

- Press the corresponding **+/- keys** to select the data to be copied from the SD-memory card into the machine memory:

MD	=	machine parameters
0 - 99	=	programs
ALL	=	all programs

- The copying process is started with the "Enter" function by pressing the right **plus key**.

If the data for copying already exists, a safety enquiry appears before overwriting the data. Press the right **plus key** to confirm the copying process. The copying process can be stopped by pressing the right **minus key**.

- When the left **+/- keys** are pressed, the other menu items of the program management are called up.

11.05.06 Deleting data in the machine memory

- Call up the program management, see Chapter **11.05.01 Calling up the program management**.

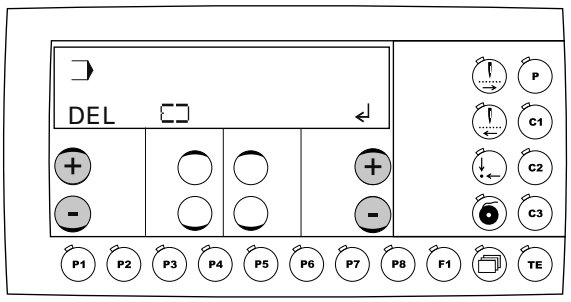

- Press the left **+/- keys** until the corresponding menu item appears.
- Confirm the selection of the menu item with the "Enter" function by pressing the right **plus key**.

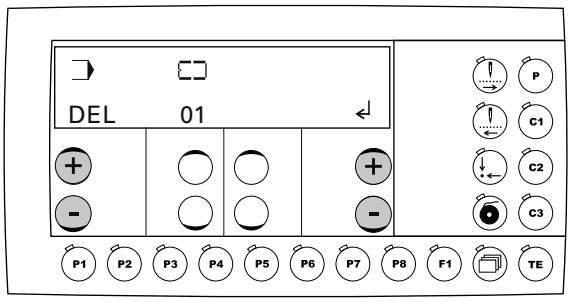

- Press the corresponding **+/- keys** to select the data to be deleted from the machine memory:

  0 - 99 = programs
  ALL = all programs
  Machine data cannot be deleted.

- The deleting process is started with the "Enter" function by pressing the right **plus key**.

Before the data is deleted, a safety enquiry ensues.

Press the right **plus key** to confirm the deleting process.

The deleting process can be stopped by pressing the right **minus key**.

- When the left **+/- keys** are pressed, the other menu items of the program management are called up

11.05.07 Deleting data from the SD-memory card

- Call up the program management, see Chapter **11.05.01 Calling up the program management**.

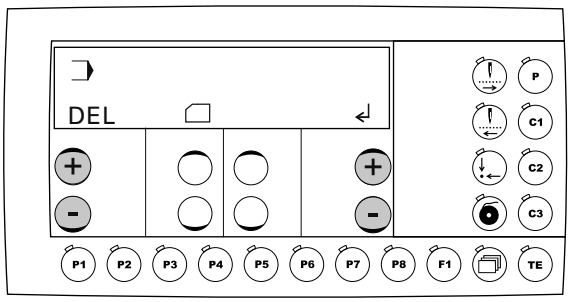

- Press the left **+/- keys** until the corresponding menu item appears.
- Confirm the selection of the menu item with the "Enter" function by pressing the right **plus key**.

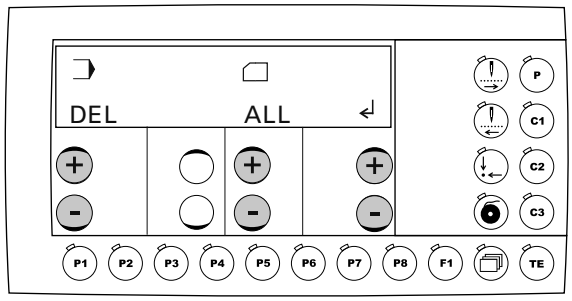

- Press the corresponding **+/- keys** to select the data to be deleted from the SD-memory card:

MD	=	machine parameters
0 - 99	=	programs
ALL	=	all programs

- The deleting process is started with the "Enter" function by pressing the right **plus key**.

Before the data is deleted, a safety enquiry ensues.

Press the right **plus key** to confirm the deleting process.

The deleting process can be stopped by pressing the right **minus key**.

- When the left **+/- keys** are pressed, the other menu items of the program management are called up

11.05.08 Formatting the SD-memory card

- Call up the program management, see Chapter **11.05.01 Calling up the program management**.

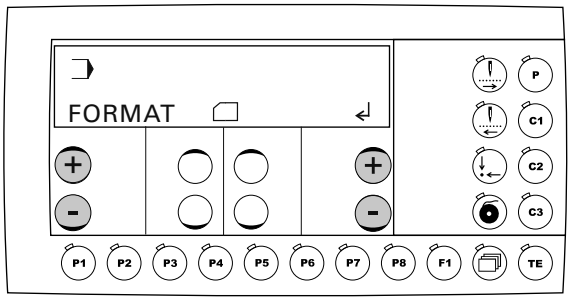

- Press the left **+/- keys** until the corresponding menu item appears.
- The formatting process is started with the "Enter" function by pressing the right **plus key**.

Before formatting begins, a safety enquiry ensues.

Press the right **plus key** to confirm the formatting process.

The formatting process can be stopped by pressing the right **minus key.**

- When the left **+/- keys** are pressed, the other menu items of the program management are called up

12 Care and maintenance

12.01 Servicing and maintenance intervals

Clean the entire machine	once a week
Clean the hook compartment	Daily, several times if in continuous use
Check the oil level	Daily, before starting the machine
Check/adjust the air pressure	Daily, before starting the machine
Clean the filter of the air filter/lubricator	As required



These maintenance intervals are calculated for the average running time of a single shift operation. If the machine is operated more than this, shorter intervals are recommended.

12.02 Cleaning the machine

The cleaning cycle required for the machine depends on following factors:

- Single or several shift operation
- Amount of dust resulting from the workpiece

It is therefore only possible to stipulate the best possible cleaning instructions for each individual case.



To avoid breakdowns, the following cleaning work is recommended for single shift operation:

- Clean hook compartment and needle area of sewing head several times daily.
- Clean the entire machine at least once a week.

To do so:



- Switch on the machine.
- Call up the threading aid function. Sewing start is disengaged.
- Clean the machine.



- Move the machine to its basic position.

12.03 Lubricating

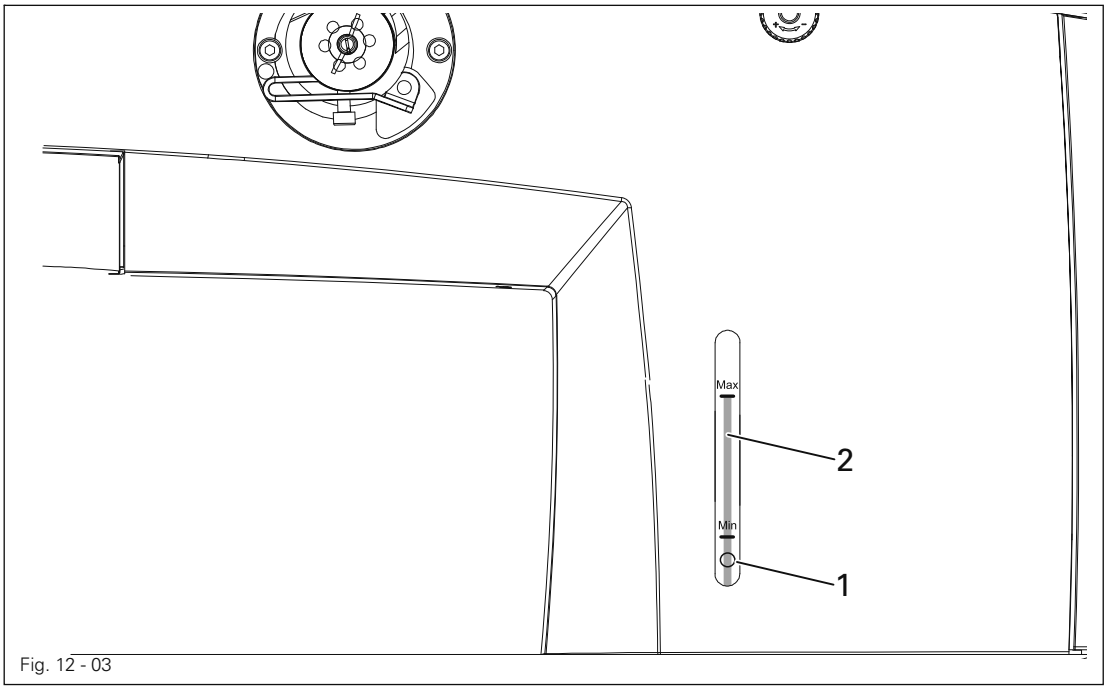

Fig. 12 - 03

Before commissioning the machine, fill in oil through hole **1** until the oil level indicator **2** is at the "MAX" marking.

Check the oil level daily before starting the machine!
The level of the oil in indicator **2** must not sink below the "**MIN**" marking and not exceed the "**MAX**" marking.
If required, fill oil into the tank through hole **1**.

Only use oil with a medium viscosity of **22.0 mm²/s** at **40° C** and a density of **0.865 g/cm³** at **15°C**!

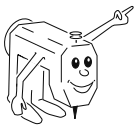

We recommend PFAFF sewing-machine oil, part No. **280-1-120 144**.

12.04 Lubricate clamp drive

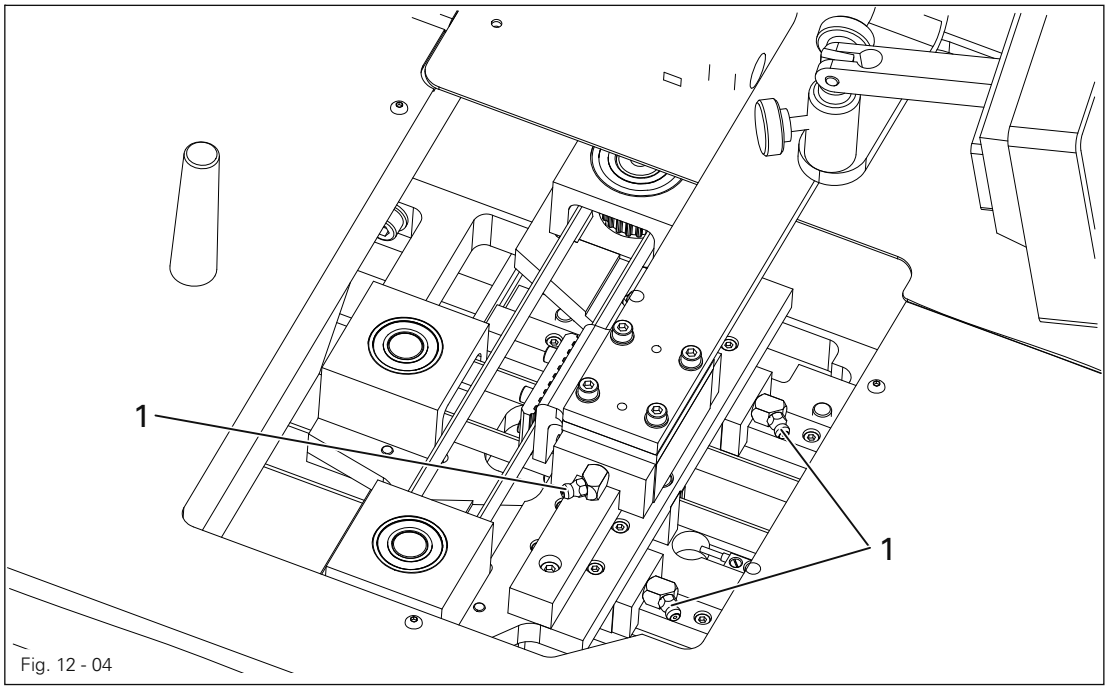

Fig. 12 - 04

Switch off the machine and take measures to prevent it being switched on again!

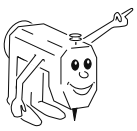

Only use Isoflex **Topas L32** high-performance grease, part no. **280-1-120 210**.

- Unscrew the cover of the jig drive.
- With the appropriate lubricating nipple **1**, using a grease gun, lubricate the guide units every **3** months for single shift operation, and once a month for double shift operation.
- Screw cover back on.

12.05 Cleaning the blower air filter

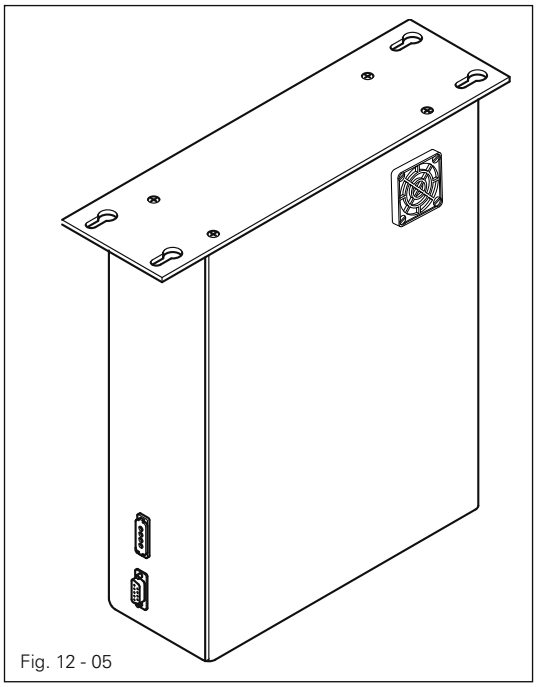

Fig. 12 - 05

- Remove cover **1**.
- Take out filter element and clean with compressed air.
- Insert the clean filter element and replace cover **1**.

12.06 Checking/regulating the air pressure

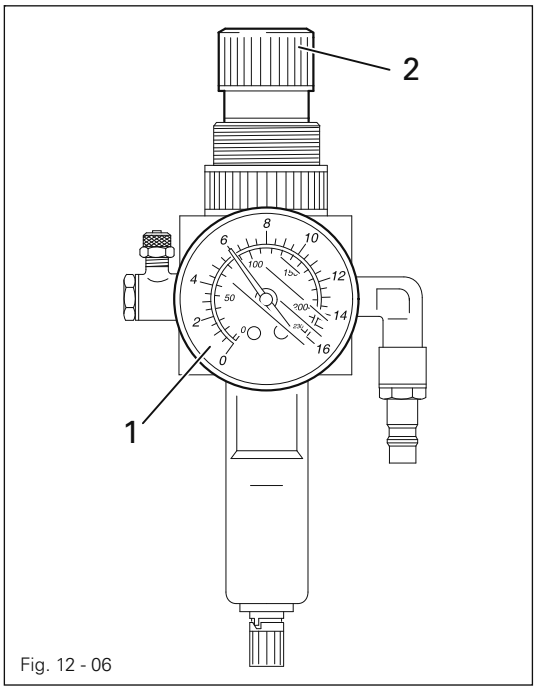

Fig. 12 - 06

- Check the air pressure on gauge **1** every time before operation.
- Gauge **1** must show a pressure of **6** bar.
- Regulate this pressure if required.
- To do so, pull knob **2** up and turn it accordingly.

12.07 Emptying/cleaning the water bowl of the air filter/regulator

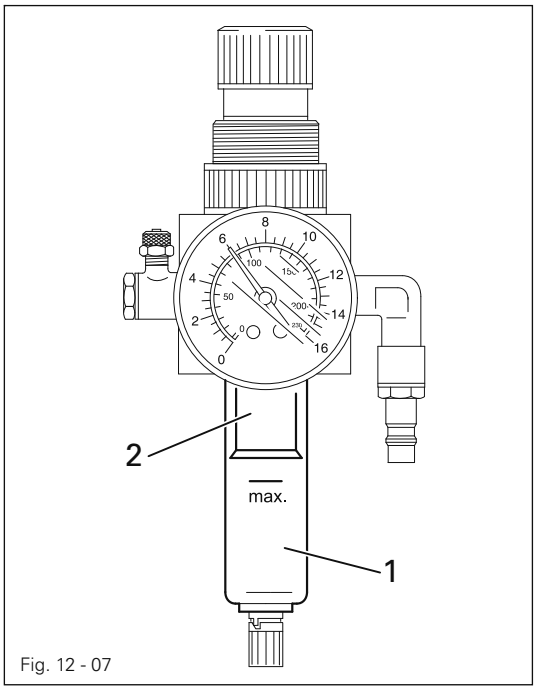

Fig. 12 - 07



Switch off the machine.
Disconnect the air hose at the air filter/regulating unit.

Emptying the water bowl

- Water bowl **1** empties itself automatically when the air hose is disconnected from the air filter/regulator.

Cleaning the filter

- Unscrew water bowl **1** and take out filter **2**.
- Clean the filter with compressed air or with isopropyl-alcohol, part number **95-665735-91**.
- Screw in filter **2** and screw on water bowl **1**.

13 Adjustment



Please observe all notes from Chapter **1 Safety** of the instruction manual!
In particular care must be taken to see that all protective devices are refitted properly after adjustment, see Chapter **1.06 Danger warnings** of the instruction manual!



If not otherwise stated, the machine must be disconnected from the electrical power supply. Danger of injury due to unintentional starting of the machine!

13.01 Notes on adjustment

All following adjustments are based on a fully assembled machine and may only be carried out by expert staff trained for this purpose.
Machine covers, which have to be removed and replaced to carry out checks and adjustments, are not mentioned in the text.
The order of the following chapters corresponds to the most logical work sequence for machines which have to be completely adjusted. If only specific individual work steps are carried out, both the preceding and following chapters must be observed.
Screws, nuts indicated in brackets ( ) are fastenings for machine parts, which must be loosened before adjustment and tightened again afterwards.

13.02 Tools, gauges and other accessories for adjusting

- Screwdrivers with blade width from **2** to **10 mm**
- Spanners (wrenches) with jaw width from **7** to **14 mm**
- **1** set Allen keys from **1.5** to **6 mm**
- **1** clamp adjusting gauge Order No. **95-295 500-05**
- Metal rule (part No. **08-880 218-00**)
- Sewing thread and test materials

13.03 Abbreviations

t.d.c. = top dead centre
b.d.c. = bottom dead centre

13.04 Explanation of the symbols

In this adjustment manual, symbols emphasize operations to be carried out or important information. The symbols used have the following meaning:



Note, information

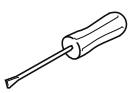

Service, repair, adjustment, maintenance
(work to be carried out by qualified staff only)

13.05 Adjusting the sewing head

13.05.01 Basic position of the balance wheel (adjustment aid)

Requirement
When the needle bar is positioned at t.d.c., the marking "**0**" on the scale should be level with the top edge of the belt guard (see arrow).

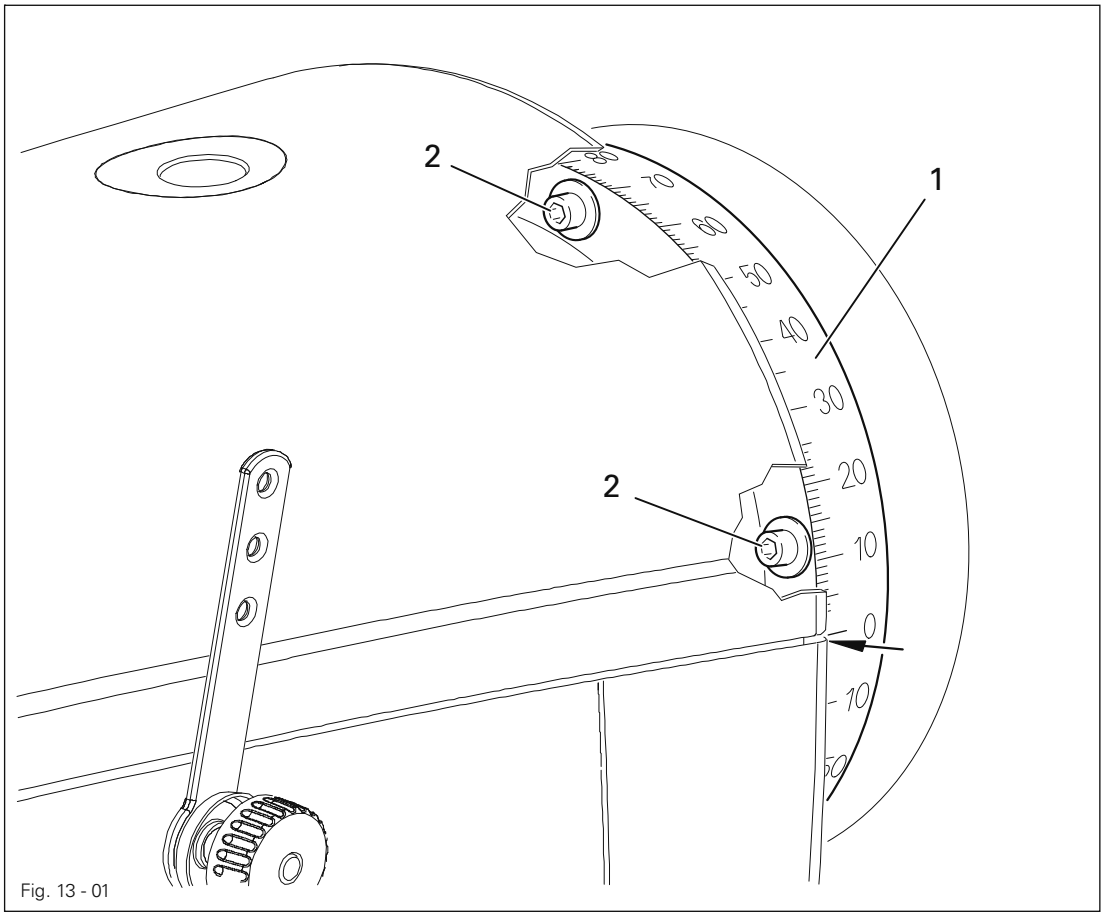

Fig. 13 - 01

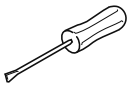

Adjust the scale dial **1** (four screws **2**) in accordance with the **requirement**.

13.05.02 Preliminary adjustment of the needle height

Requirement
When the needle bar is positioned at t.d.c. (balance wheel position **0°**), the clearance between the needle point and the cover plate **6** should be **27 mm**.

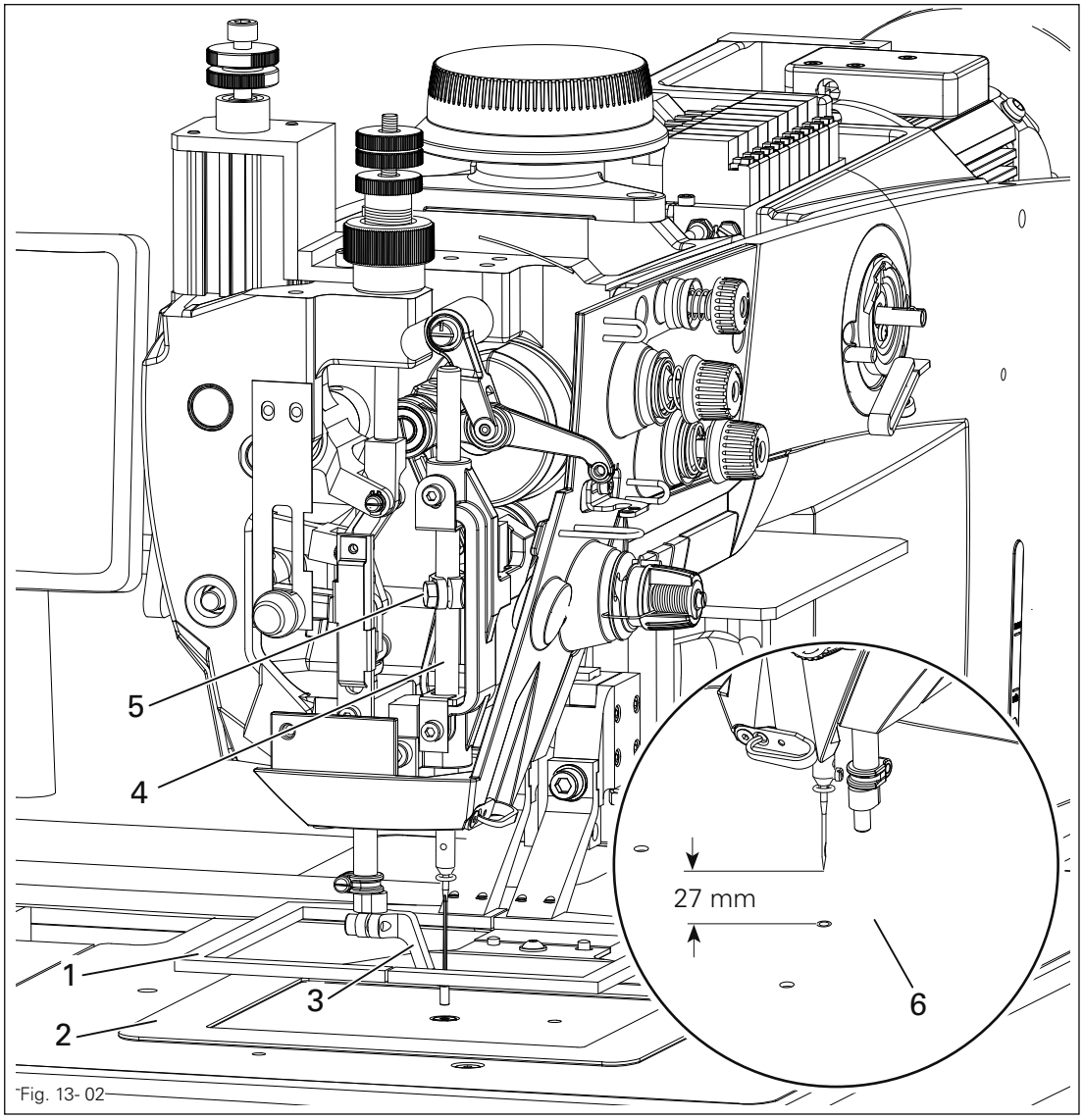

Fig. 13- 02

- Unscrew clamp **1**, plate **2** and hopping foot **3**.
- Without turning it, re-position needle bar **4** (screw **5**) in accordance with the **requirement**.

13.05.03 Needle rise, hook clearance and needle height

Requirement

In needle bar position, **2.0** mm after b.d.c. (balance wheel position **202°**):

1. The hook point **5** should be positioned at "needle centre" with a hook-to-needle clearance of **0.05 – 0.10 mm**.
2. The top of the needle eye should be positioned **0.8 mm** below hook point **5**.

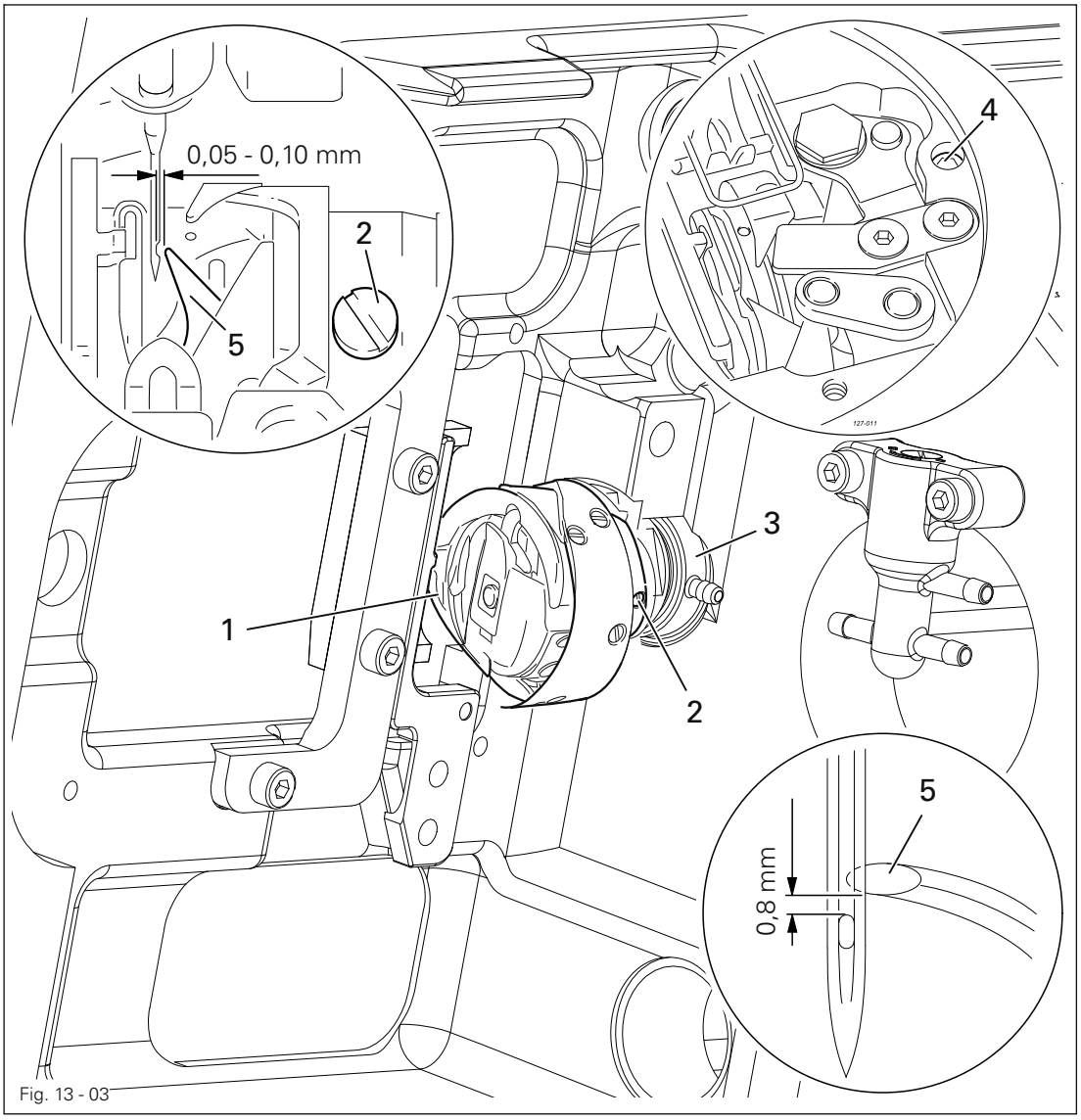

Fig. 13 - 03

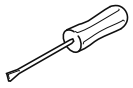

- Maschine mittels Handrad in Schlingenhubstellung bringen.
- Adjust hook **1** (screws **2**) in accordance with **requirement 1**.
- Bring oil distributor ring **3** (screw **4**) into contact with hook **1**.
- Without turning it, re-position the needle bar in accordance with the **requirement 2**.

13.05.04 Reversing point of hopping foot

Requirement
When the needle bar is in b.d.c. hopping foot **3** should have reached its bottom point of reversal.

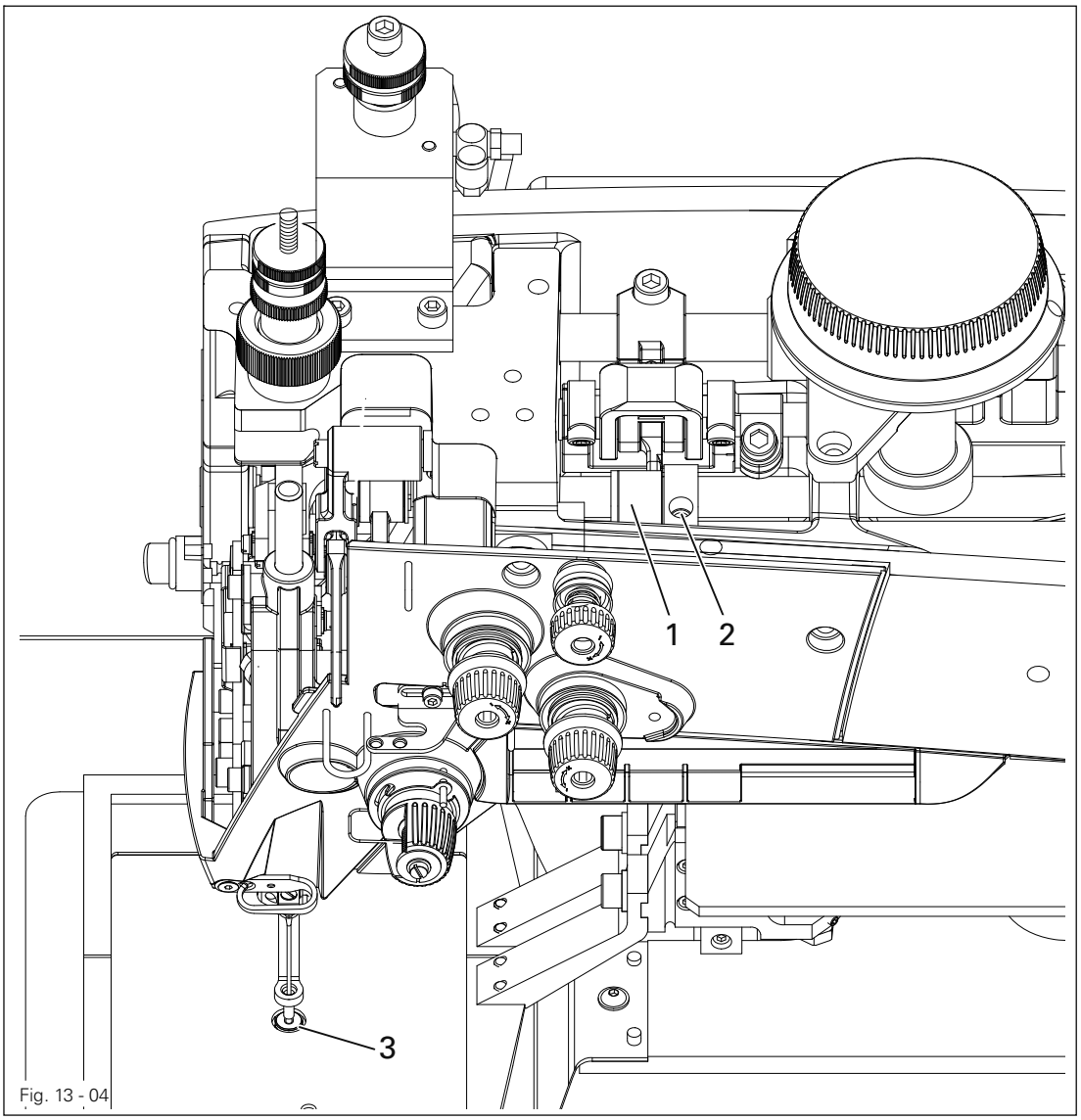

Fig. 13 - 04

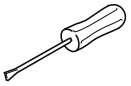

- Turn crank **1** (screws **2**) according to requirement.

13.05.05 Hopping foot lift

Requirement

The hopping foot should

1. make no movement when setting wheel **5** is set to "**0**",
2. rise **5** mm when setting wheel **5** is set to "**5**".

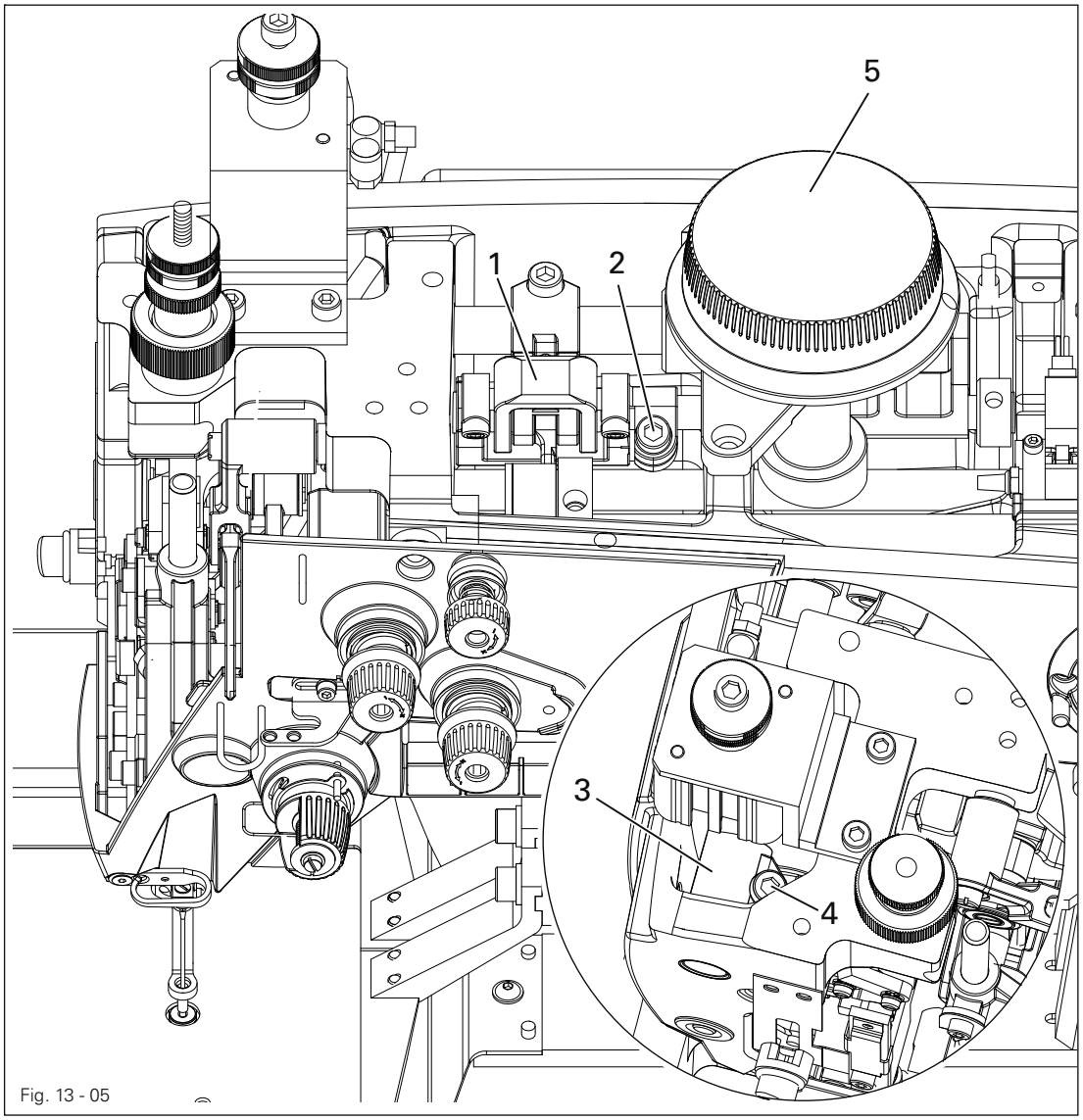

Fig. 13 - 05

- Turn crank **1** (screw **2**) according to requirement **1**
- Adjust crank **3** (screw **4**) according to requirement **2**.

13.05.06 Adjusting hopping foot pressure

Requirement
The hopping foot pressure should be adjusted so that the hopping foot movement is also ensured at top speed.

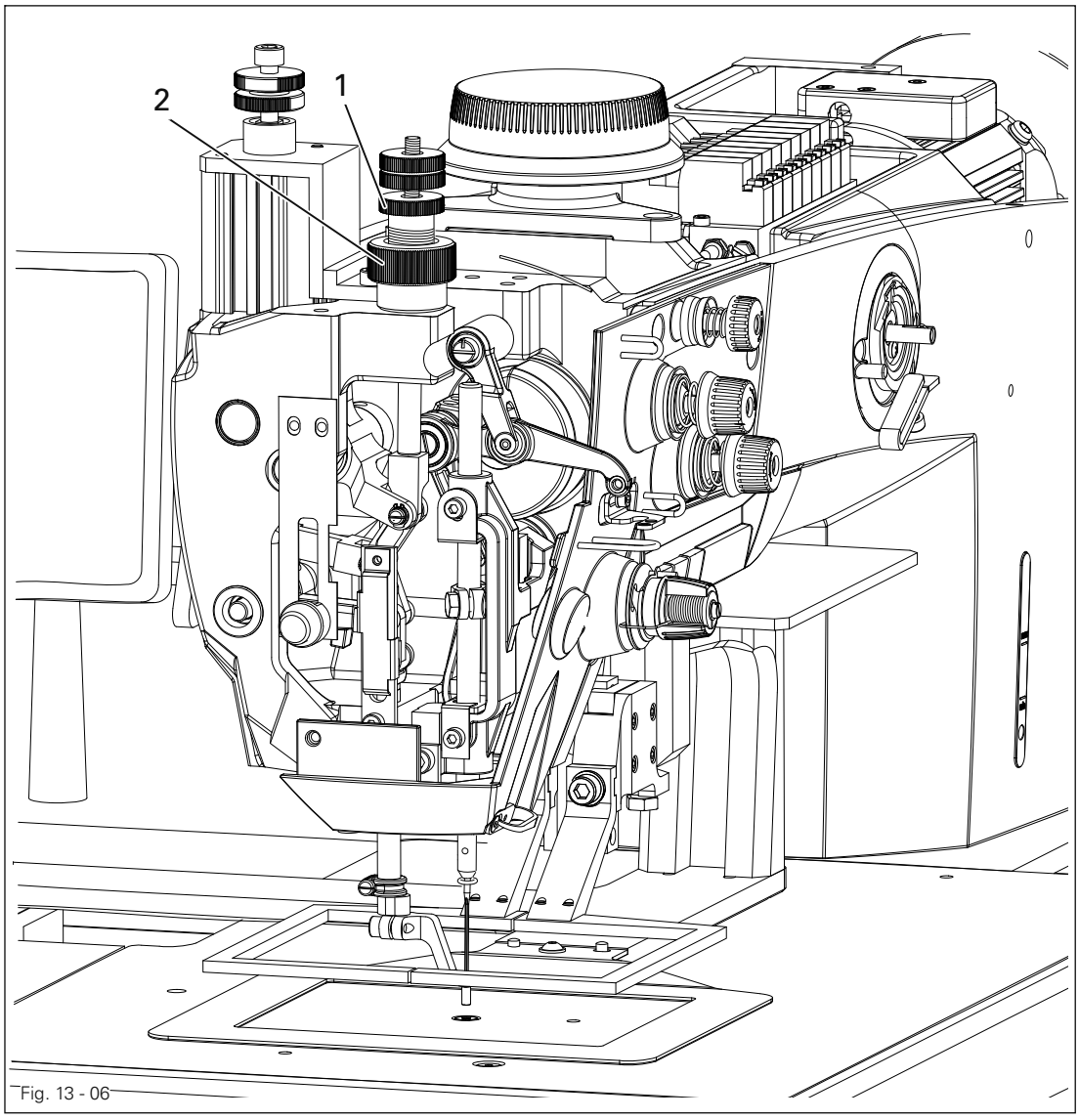

Fig. 13 - 06

- Turn knurled nut **1** (lock nut **2**) according to the requirement.

The hopping foot height must be readjusted (see Chapter **13.05**.07) after changing the hopping foot pressure.

13.05.07 Adjusting hopping foot height

Requirement
When at its lowest point of reversal, hopping foot **3** should be positioned above cover plate **4** at a distance corresponding to the material thickness.

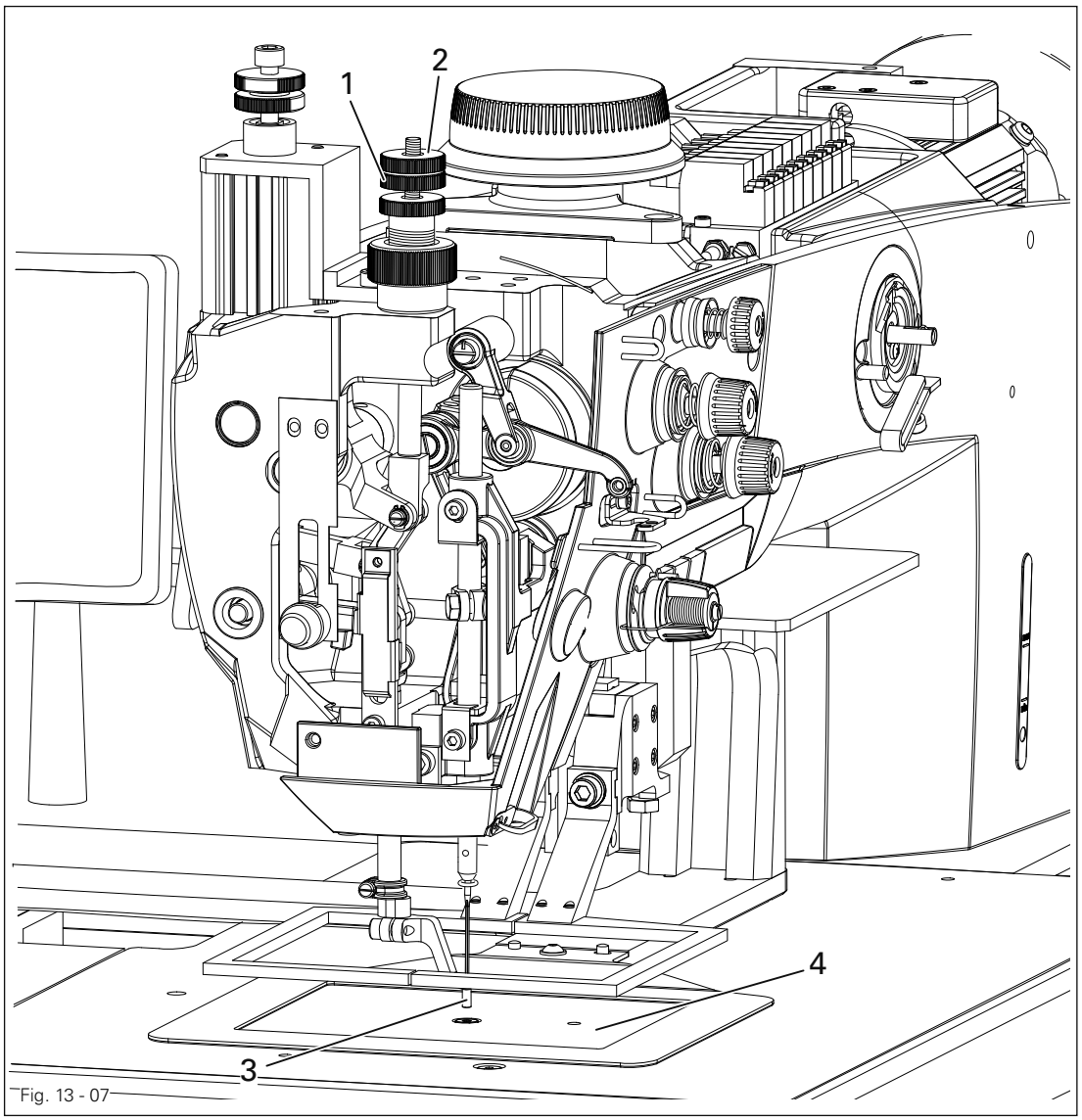

Fig. 13 - 07

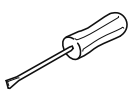

- Turn knurled thumb screw **1** (lock nut **2**) according to the requirement.

13.05.08 Regulating the level of the hopping foot

Requirement

1. When executing programmed level regulation, the second foot height should be adjusted so that hopping foot **5** is positioned above cover plate **6** at a distance corresponding to the sewing material thickness.
2. When the needle bar is in b.d.c. and level regulation is raised to maximum, the needle bar must not contact with hopping foot **5**..

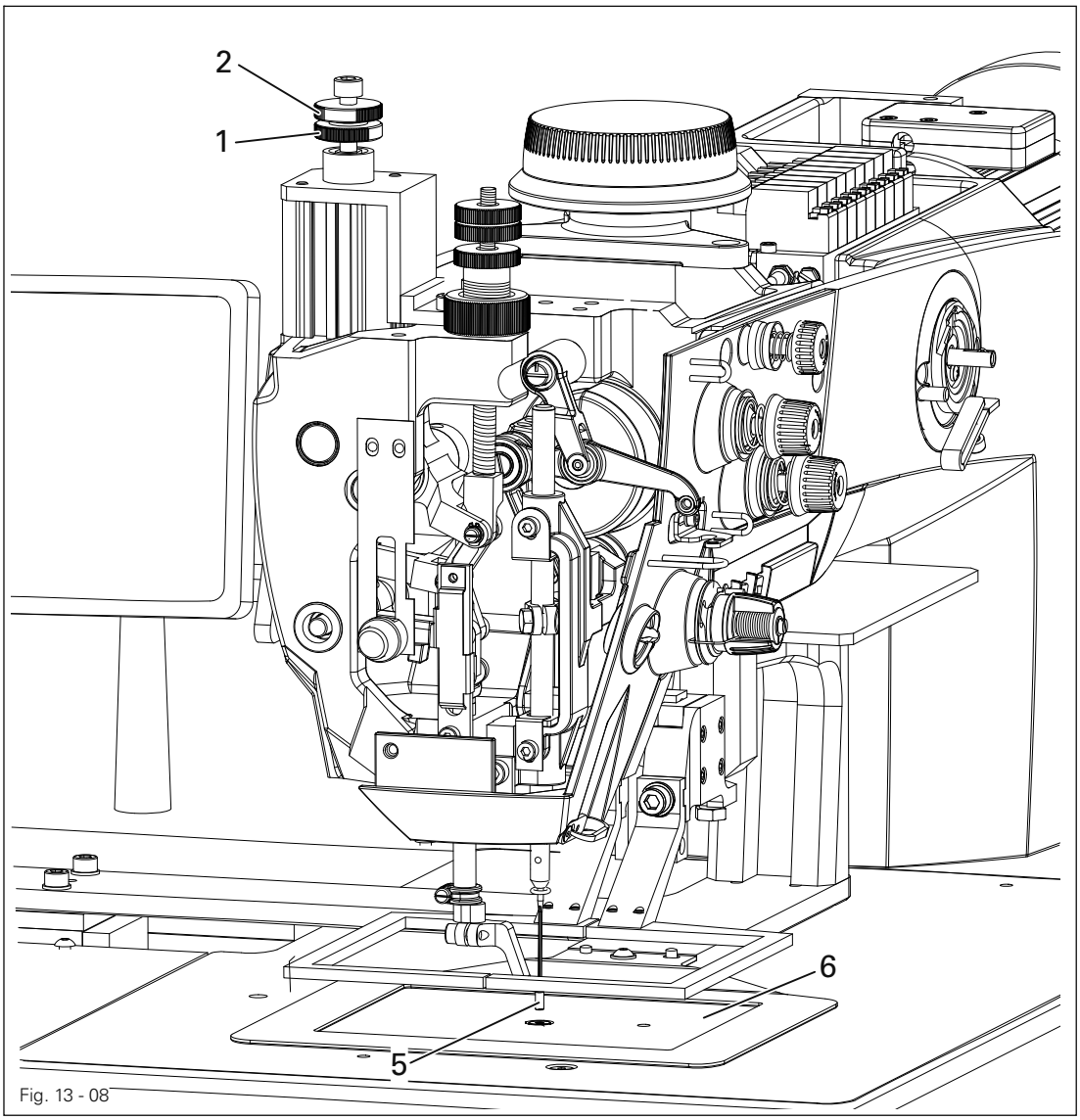

Fig. 13 - 08

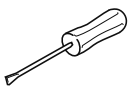

- Turn screw **1** (lock nut **2**) according to the requirement.

13.05.09 Bobbin winder

Requirement

1. When the bobbin winder is engaged, the winding spindle must be driven reliably. When it is disengaged, friction wheel **3** should not be touching drive wheel **1**.
2. When it is switched off, the bobbin winder must click securely into its end position (knife raised).

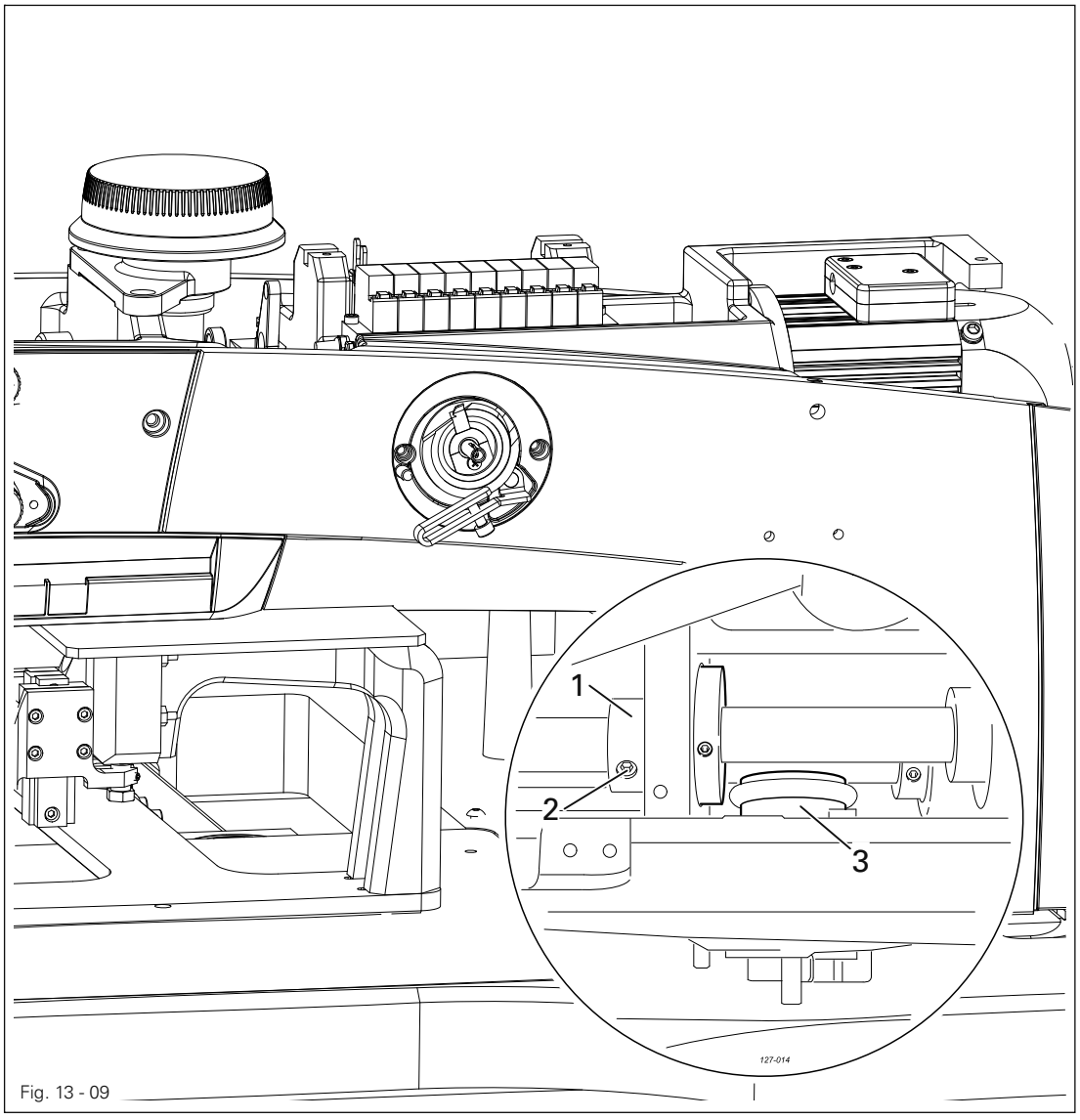

Fig. 13 - 09

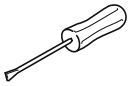

- Adjust drive wheel **1** (screw **2**) in accordance with the **requirement**.

13.05.10 Thread check spring and thread regulator

Requirement

1. The movement of thread regulator **3** must be completed when the needle point enters the material.
2. When the thread loop is at its largest while being passed around the hook, the check thread spring **3** should rise slightly from the rest **1**.

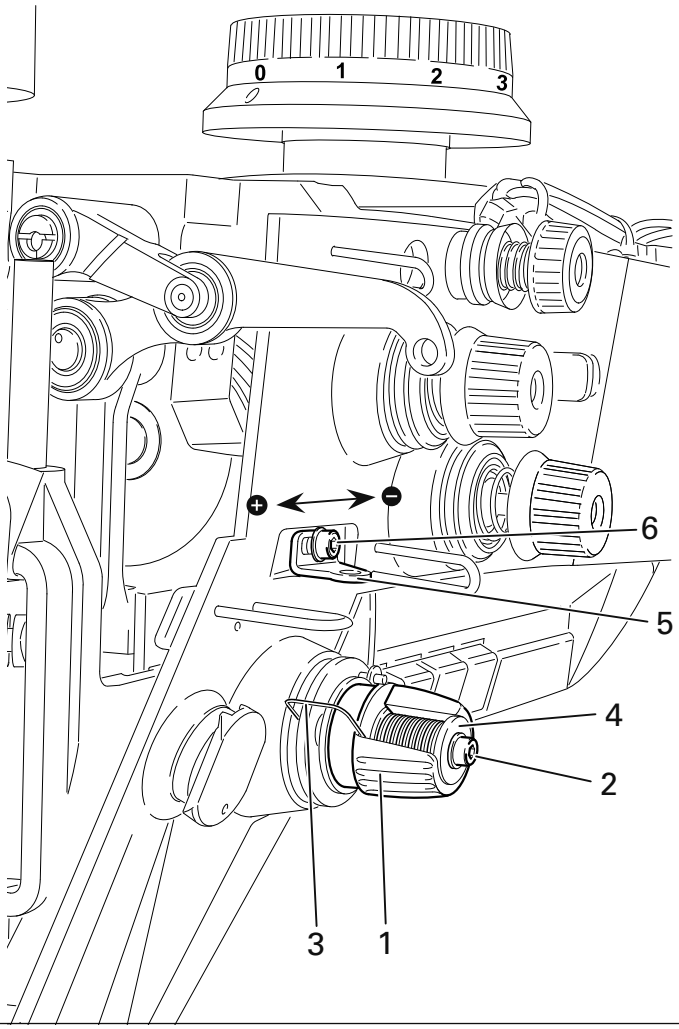

Fig. 13 - 10

- Position rest **1** (screw **2**) in accordance with **requirement 1**.
- Turn sleeve **4** (screw **2**) to adjust the tension of thread check spring **3**.
- Position thread regulator **5** (screw **6**) in accordance with **requirement 2**.

For technical reasons it may be necessary to deviate from the indicated spring stroke or spring tension.
Move thread regulator **5** (screw **6**) towards ("+") (= more thread) or ("-") (= less thread).

13.05.11 Lubrication

Requirement
After a running time of **10** seconds a thin film of oil should be visible on paper strip **1** when this is held over the hook.

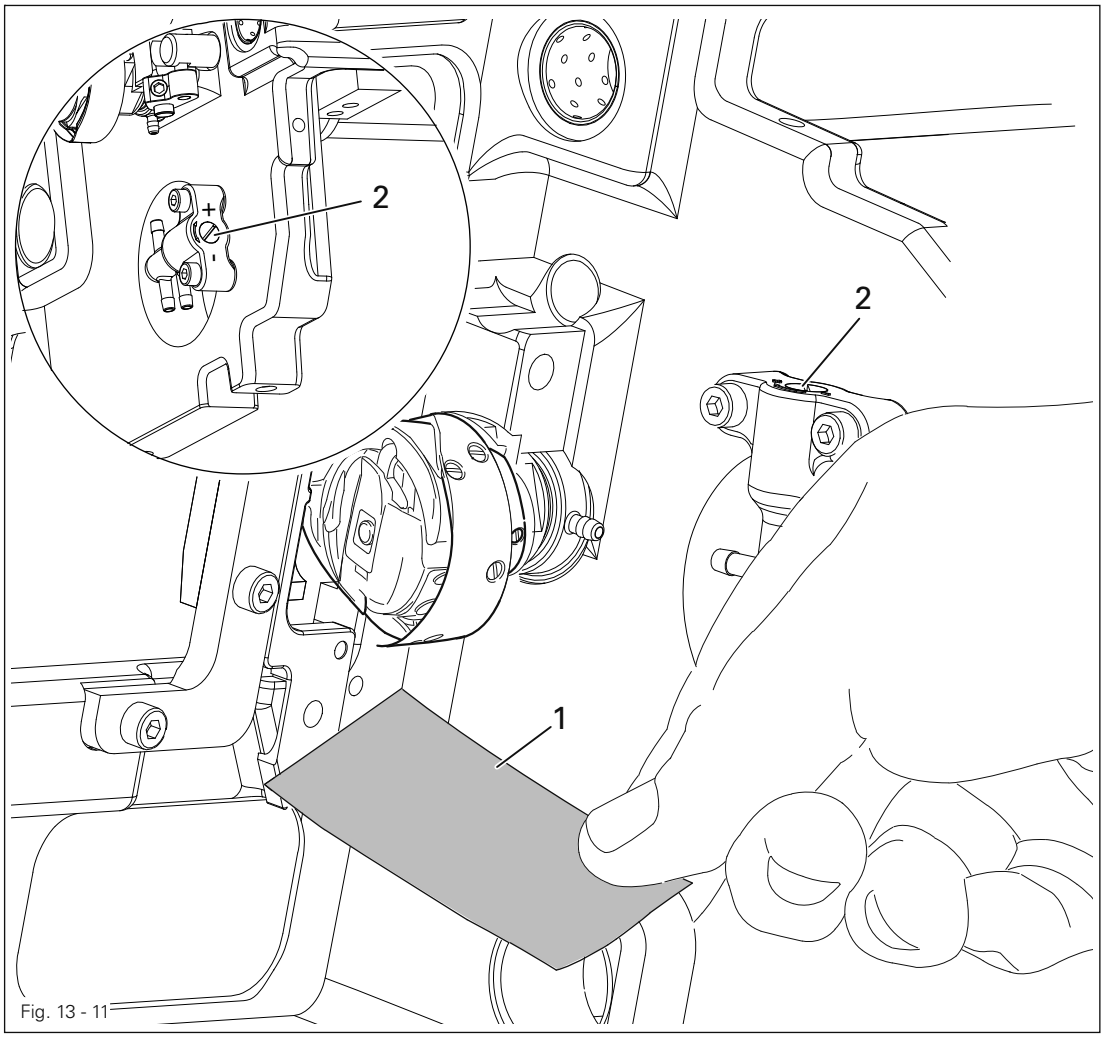

Fig. 13 - 11

- Check that the machine is filled with oil and that the oil lines are free of air.
- Call up bobbin winding function.
- Use the pedal function to run the machine **2 - 3 minutes**.
- With the machine running, hold paper strip **1** against the hook and check the **requirement**.
- If necessary, regulate amount of oil with screw **2**.

Do not reach into the hook area while the machine is running!
Danger of injury from rotating hook tipsreifen!

13.05.12 Basic position of the thread trimmer

Requirement

1. When the thread trimmer is in its resting position (cylinder extended), the point of thread catcher **6** should be flush with the cutting edge of knife **7** (see arrow).
2. The roller lever **3** should have a clearance of **1 mm** to the connecting piece.

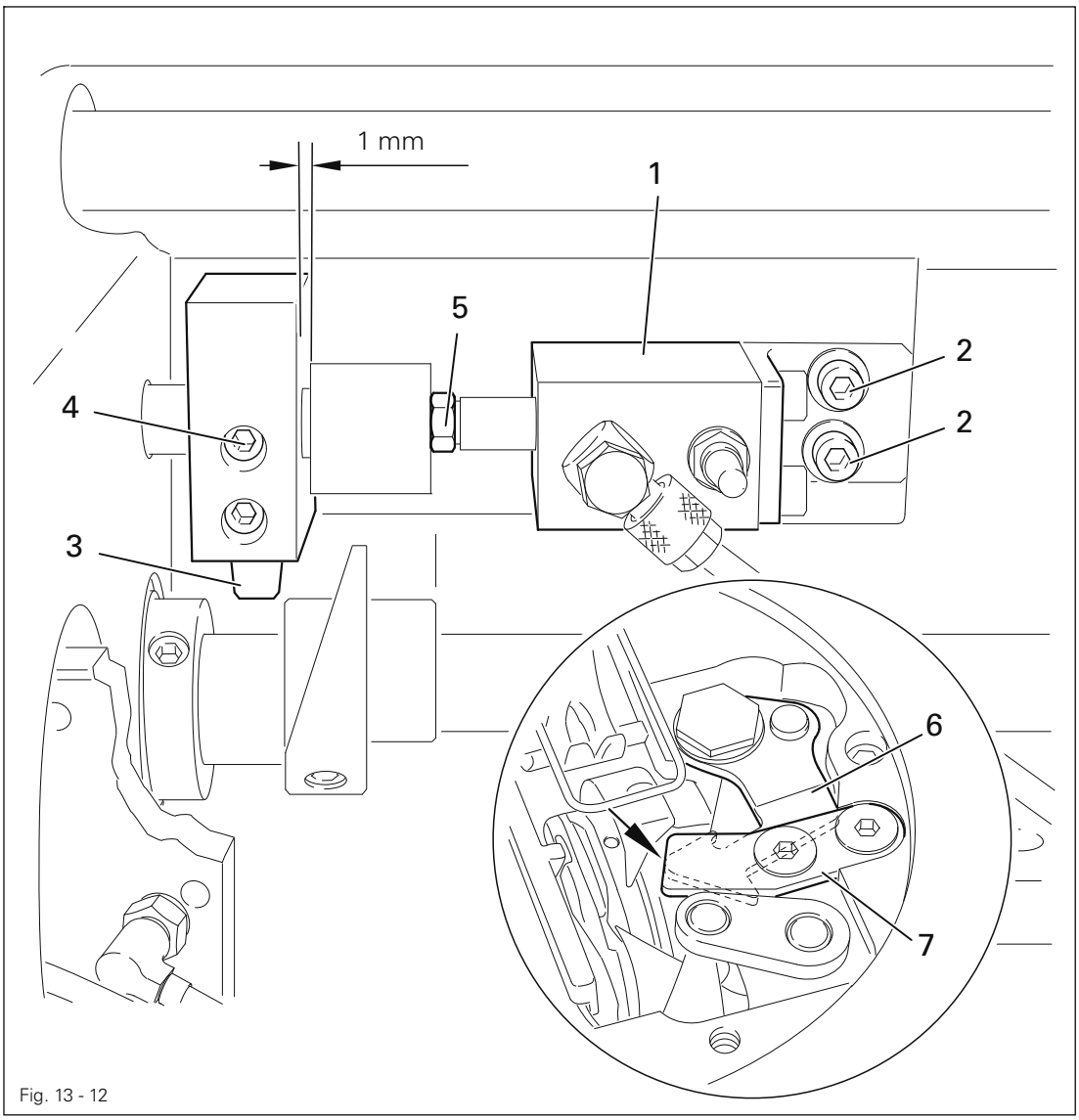

Fig. 13 - 12

- Adjust thread trimmer **1** (screws **2**) in accordance with **requirement 1**.
- Adjust roller lever **3** (only screw **4**) in accordance with **requirement 2**.

13.05.13 Control cam to roller lever clearance (resting position)

Requirement
When the thread trimmer is in its resting position (balance wheel position **270°**) there should be a clearance of **0.1 mm** between the roller lever **5** and the outside edge of control cam **1**.

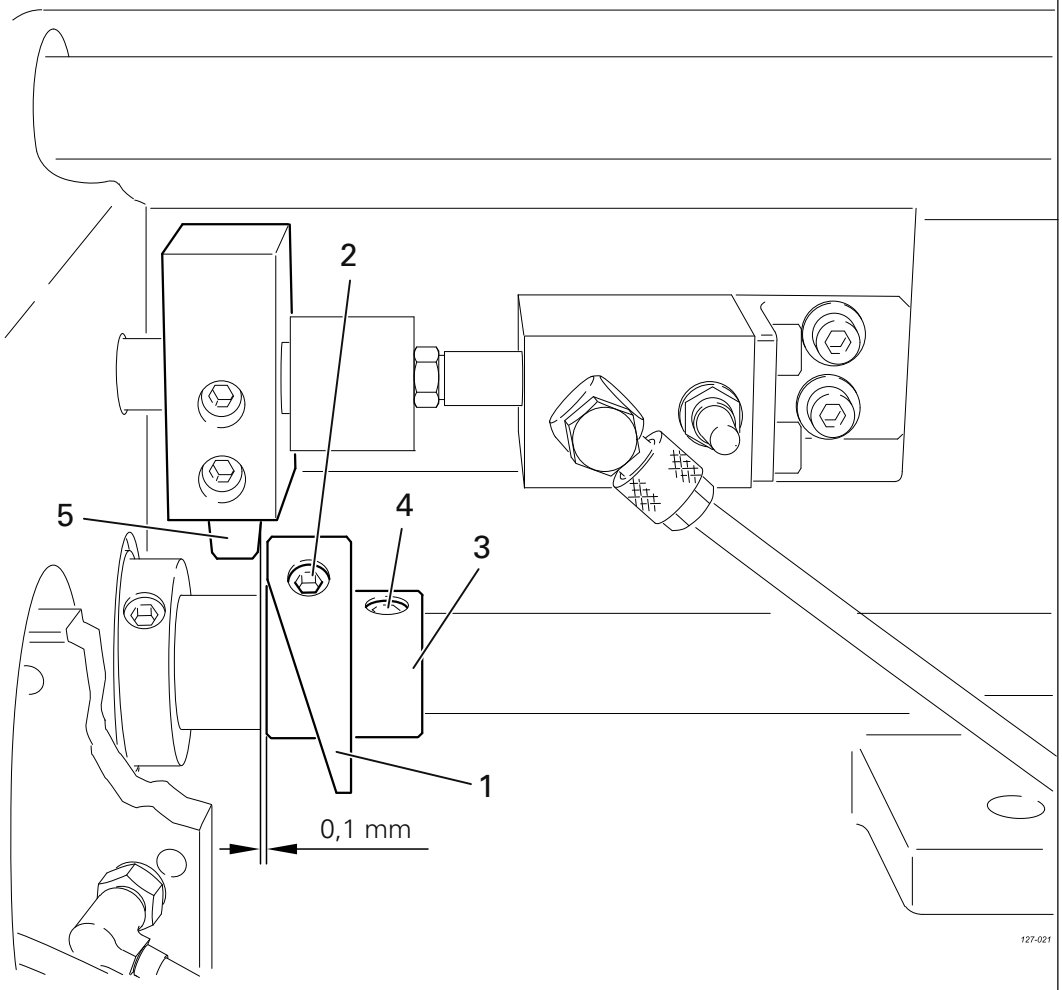

Fig. 13 - 13

- Adjust control cam **1** (screw **2**) together with retaining collar **3** (screw **4**) in accordance with the **requirement**.

13.05.14 Adjusting the control cam

Requirement
When the take-up lever is at the top of its stroke (balance wheel position **70°**), the cutting operation should just have been completed.

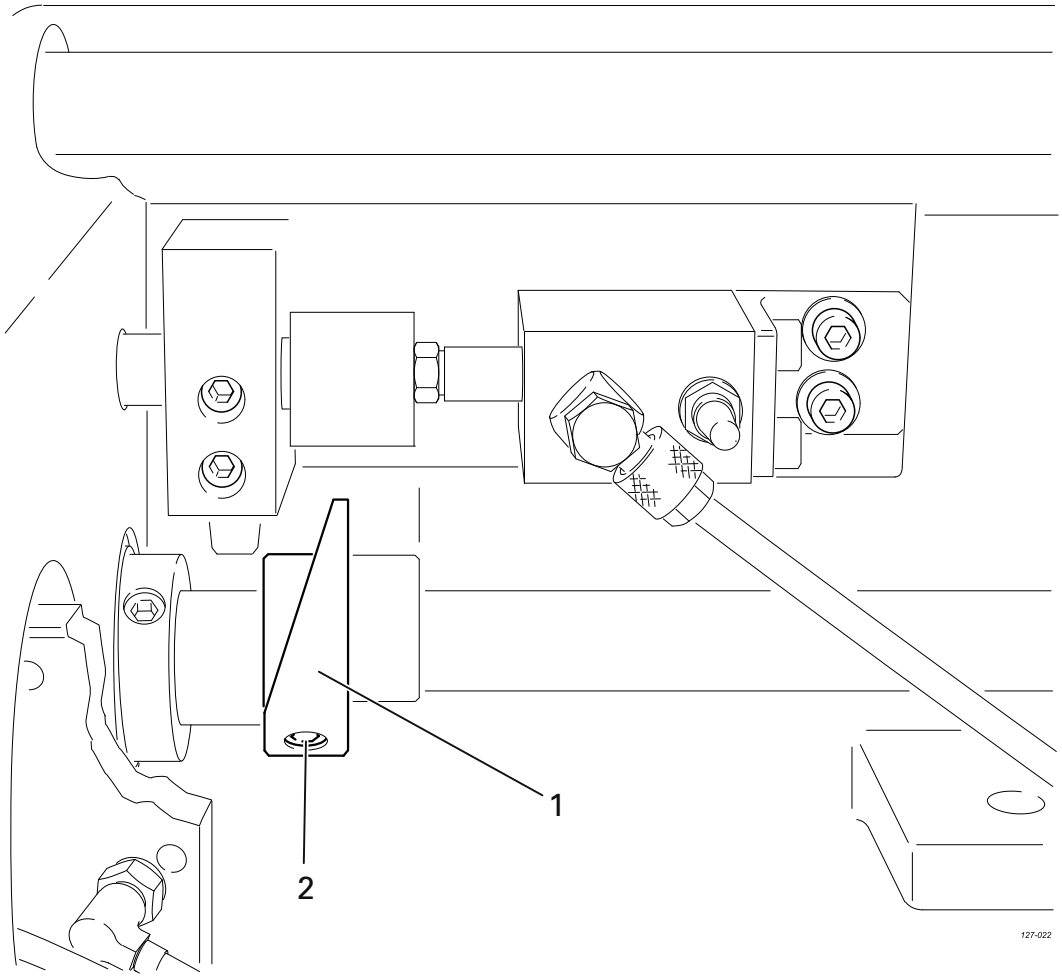

Fig. 13 - 14

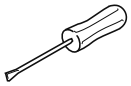

- Adjust control cam **1** (screw **2**) in accordance with the **requirement**.

13.05.15 Knife pressure

Requirement
The thread should be cut reliably at all times.

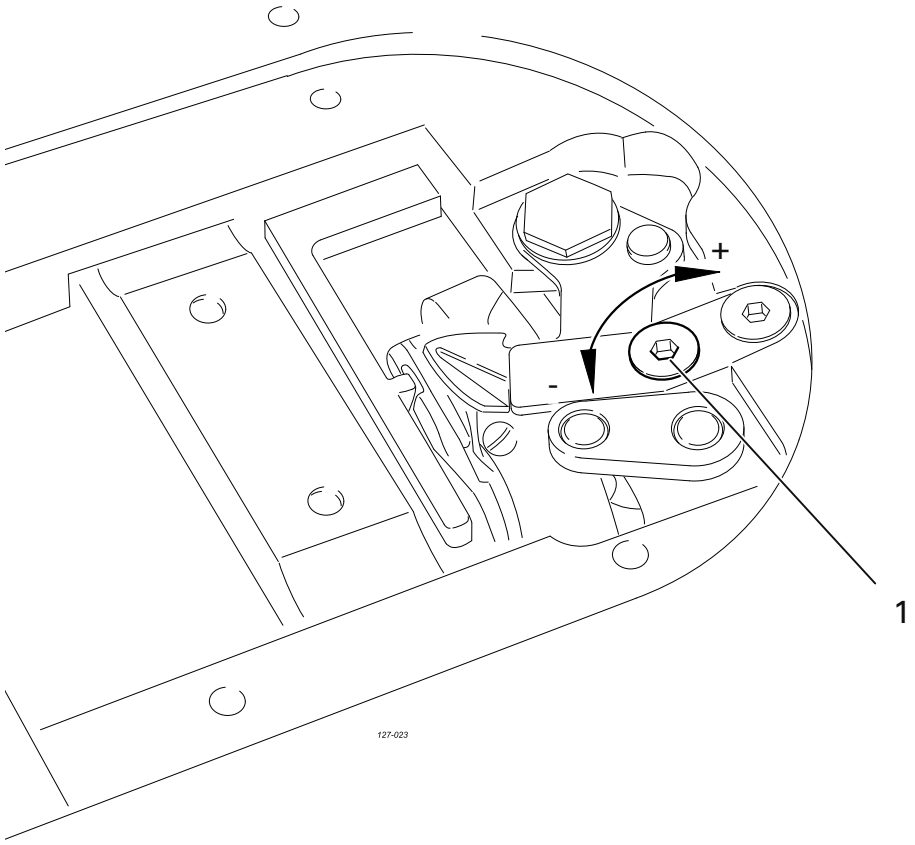

Fig. 13 - 15

- Increase ("+") or reduce ("-") the knife pressure accordingly with screw **1**.

13.05.16 Manual cutting test

Requirement
Both the needle and the bobbin thread should be cut neatly.

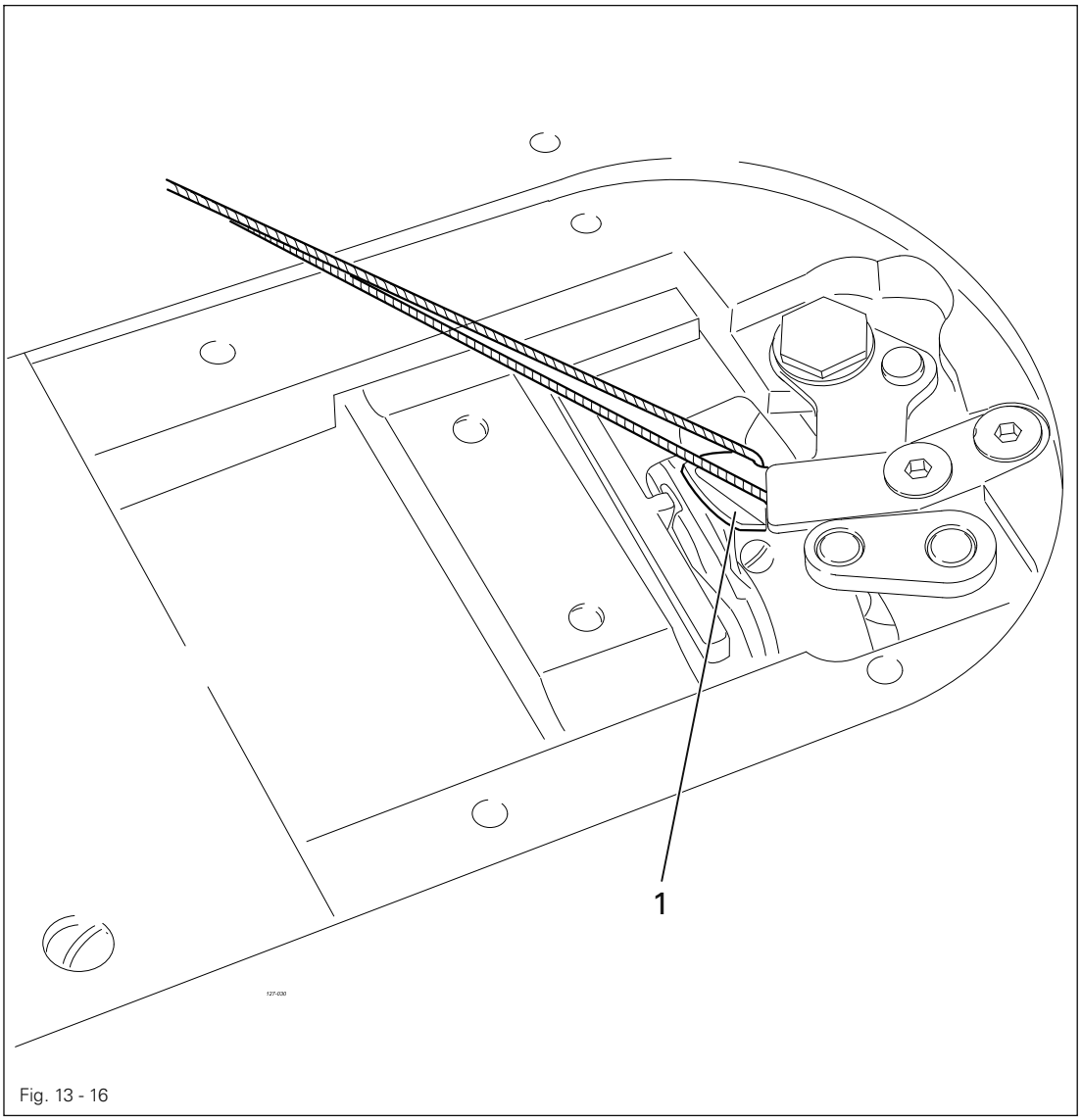

Fig. 13 - 16

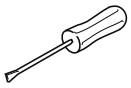

- Bring thread catcher **1** by hand to its front position.
- Take a double thread and place it into the catcher slot.
- Carry out a manual cutting test.
- If the thread is not cut in accordance with the **requirement**, adjust the knife pressure as described in Chapter **13.05.15 Knife pressure**.

13.05.17 Aligning the clamp drive

Requirement
The clamp should be parallel to the table plate both in "X" and in "Y" direction.

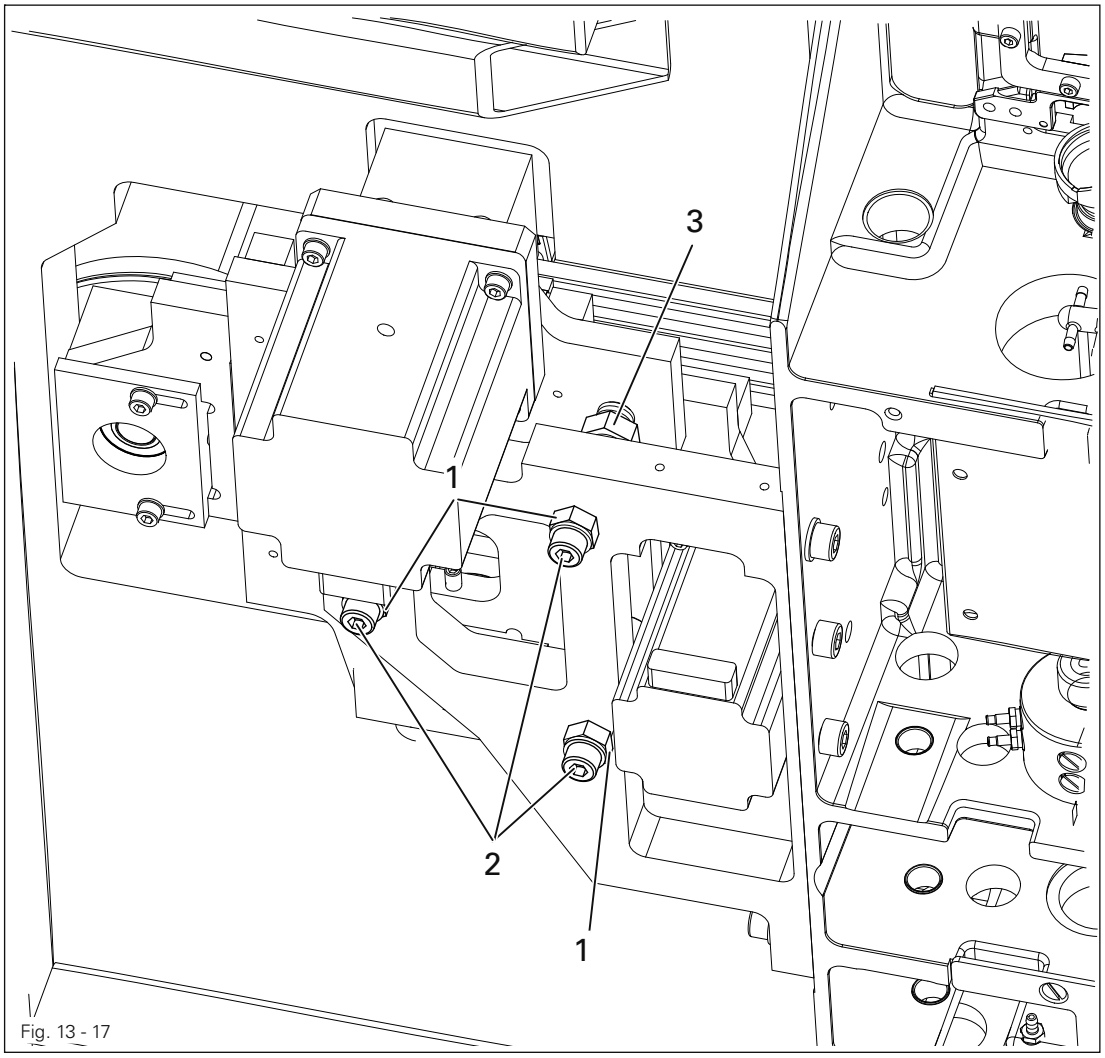

Fig. 13 - 17

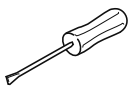

- Turn adjusting nut **1** (lock nut **2** and lock nut **3**) according to the requirement.

13.05.18 Adjusting belt tensions

Requirement
The belt tensions should be tested and adjusted using a measuring device.
The clamp drive belt tensions should be tested with a measured value of
300 - **400** Nm..

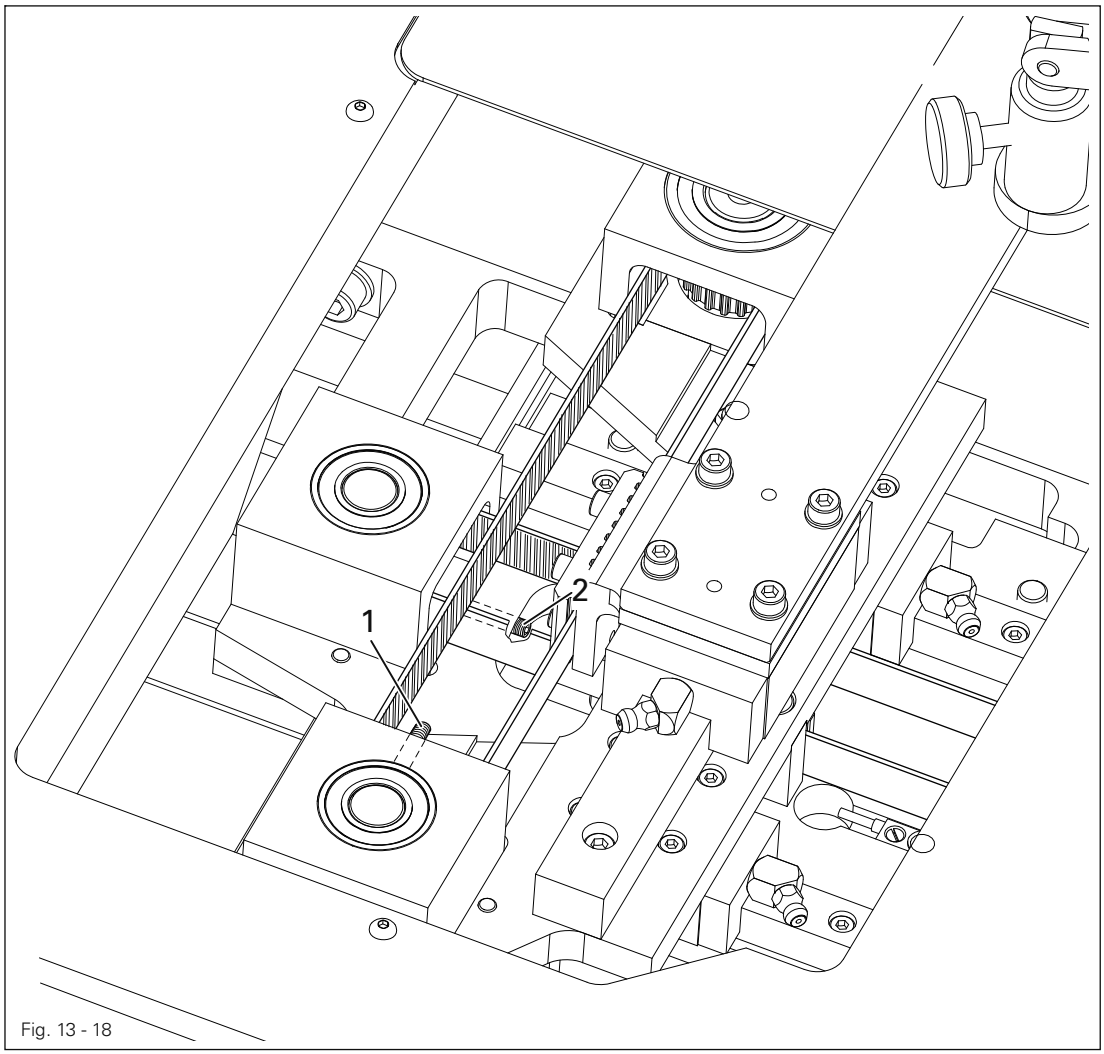

Fig. 13 - 18

- Adjust clamp drive belt tensions using screws **1** (screws **2**) in accordance with the requirement.

The measuring device is available under Order No **99-13**7 171-91.

13.06 Parameter list

Group	Parameter	Description	Setting range	Set value
0	001	Maximum speed	500 - 2800	2800
	002	Sewing stitch speed	1 -5	1: 500 2: 900 3: 1500 4: 2000 5: 2500
	003	Clamp type 0 - split, 1 - single	0 - 1	0
	004	Bobbin thread counter, Preset value	ON - OFF 1 -9999	OFF 1000
	005	Sequence combination This parameter is used to combine several sequences with each other. 0 = no combination 1 = C1 with C2 2 = C2 with C3 3 = C1 with C3 4 = C1 with C2 and C3	0 - 4	0
	006	Reversing after thread trimming	ON - OFF	ON
	007	Starting point = scale reference point	ON - OFF	OFF
	009	Drive to start position via zero position after sequencing	ON - OFF	OFF
	010	Drive to start position via zero position after number of programs Number1 - 100	ON - OFF	OFF
	011	Pedal mode, 0 = Level mode, 1 = FlipFlop mode	0 - 1	0
	012	Needle or balance wheel position in degrees (0 - 360)	-	-
	015	Reduced current for stepping motors	ON - OFF	ON
	016	Key tone	ON - OFF	ON
	027	Basic position / loading point = zero point	ON - OFF	OFF
	028	Number of slow starting stitches	1 - 9	2

Group	Parameter	Description	Setting range	Set value
0	029	Auto. clamp opening after program end off	ON - OFF	OFF
	030	Continuous start, test function	ON - OFF	OFF
	031	0 = material thickness < = 4.5 mm, 1 = material thickness > = 4.5 mm	0 - 1	0
100	101	Software version main processor		
	102	Software version sewing drive unit		
	103	Software version control panel		
200	201	Min. X-coordinate	-650 - 0	-650
	202	Max X-coordinate	0 - 650	650
	203	Min. Y-coordinate	-1000 - 0	-1000
	204	Max. Y-coordinate	-1000 - 0	0
	205	Increment correction X	-30 - +30	0
	206	Increment correction Y	-30 - +30	0
	207	0 = Foot jumper not attached, 1 = Foot jumper attached (lift monitoring active) 2 = Foot jumper not attached (lift monitoring active)	0 - 2	1
	208	Thread wedeler attached	ON - OFF	OFF
	209	Min. Jumper foot lift (potentiometer value)	-	0
	210	Max. Jumper foot lift (potentiometer value)	-	1023
300	301	NIS	0 - 255	78
	302	Thread lever t.d.c.	0 - 255	61
	303	Thread trimming position on	0 - 255	180
	304	Thread trimming position off	0 - 255	245
	305	Thread clamp position closed, during sewing	0 - 255	71
	306	Thread clamp position open, during sewing	0 - 255	235
	307	Reverse rotation position	0 - 255	20
	308	Stop position	0 - 255	71
	309	Thread tension during thread trimming	0 - 255	0
	310	Thread-in position	0 - 255	40
500	501	Reduced speed (set value x 100)	1 - 28	15

Group	Parameter	Description	Setting range	Set value
500	502	Trimming speed (set value x 100)	5 - 25	2
	503	Speed during bobbin winding	2 - 28	15
	505	Time for wiper [in 10ms]	1 - 50	30
600	601	Display inputs With this function the digital inputs can be checked. "IN" shows the input numbers (1 - 16). Under "VAL" the respective switch status is displayed. IN VAL 1 SMREF1 2 SMREF2 3 IN1, programmable input 1 4 IN1, programmable input 2 5 Treadle switch 6 - 16 free		
	602	Display special inputs IN VAL PED Pedal (speed control unit –1,0,+1,+2)		
	603	Connect outputs With this function the outlets can be connected. "OUT" shows the outlet selected (1-16). Under "VAL" the selected output is set (S) with the plus/minus key (+), and reset (R) with the plus/minus key. Interlocks are checked. Non-assigned outlets are not connected. OUT VAL 1 S/R 2 S/R 3 S/R clamp 1 closed 4 S/R Thread wedeler on (optional) 5 S/R 6 S/R clamp 1 open 7 S/R clamp 2 open 8 S/R thread trimming on 9 S/R Thread tension open 10 S/R Secondary thread tension open (Progr. output 4) 11 S/R Foot open 12 S/R Thread clamp closed 13 S/R clamp 2 closed 14 S/R 2nd level jumper foot on (Progr. output 3) 15 S/R Progr. output 1 16 S/R Progr. output 2		

Group	Parameter	Description	Setting range	Set value
600	604	Move stepping motors (SM1 = X-axis, SM2 = Y-axis)		
	605	Turn sewing motor	200 - 2800	200
	606	Thread trimming sequence		
	607	Cold start (RESET)		
	608	Setting zero points		
800	801	Right of access function group 000	ON - OFF	ON
	802	Right of access function group 100	ON - OFF	ON
	803	Right of access function group 200	ON - OFF	OFF
	804	Right of access function group 300	ON - OFF	OFF
	806	Right of access function group 500	ON - OFF	OFF
	805	Right of access function group 600	ON - OFF	OFF
	808	Right of access function group 700	ON - OFF	OFF
	809	Right of access function group 800	ON - OFF	OFF
	810	Right of access to keys P, P1 - P8, C1 – C3	ON - OFF	ON
	811	Access code	0 - 9999	3108

13.07 Internet update of the machine software

The machine software can be updated with PFAFF flash programming. For this purpose the PFP boot program (from **version 3.25** on) and the appropriate control software for the machine type must be installed on a PC. The transfer of the data to the machine can be carried out with a null modem cable (part no. **91-291 998-9**1) or with an SD-card. The SD-card must be formatted in the **FAT**16 format and must not exceed a capacity of 2 **GBytes**.

The PFP boot program and the control software of the machine type can be downloaded from the PFAFF-homepage using the following path:
www.pfaff-industrial.com/pfaff/de/service/downloads

13.07.01 Update with null modem cable

- After downloading the PFP tool and the control software, open the PFP program.
- Select the **machine type** and under control unit **P320**.
- The software version is displayed under **report**.



- Switch off the machine.
- Connect the PC (serial interface or appropriate USB-adapter) and the machine control unit (**RS232**). To do so disconnect the plug of the control panel.

While the machine software is being updated, no setting up, maintenance or adjustment work may be carried out on the machine!

- Switch on the machine, keeping the boot key **1** pressed.
- Press the "OK" button.
  The software update is carried out, the update progress is shown on the bar display of the PFP boot program.
- During the updating process the machine must not be switched off.
- When the update has been completed, switch off the machine and end the PFP boot program.
- End the connection between the PC and the machine control unit and reconnect the control panel to the machine control unit.

- Switch on the machine
- A plausibility control is carried out and, if necessary, a cold start.

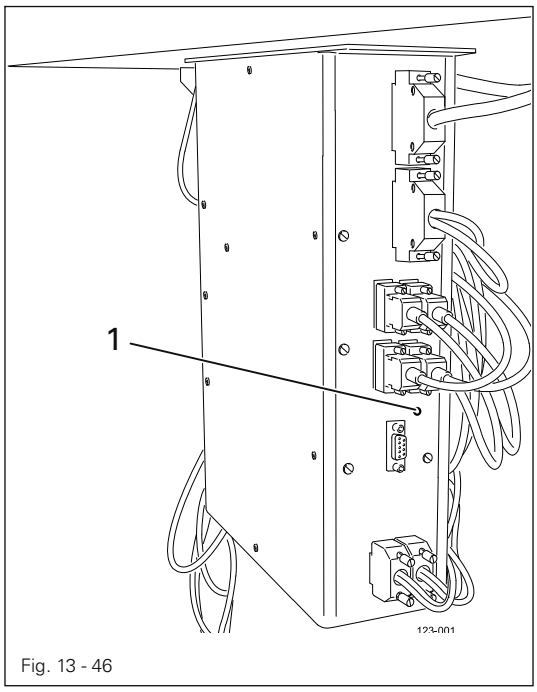

Fig. 13 - 46

More information and assistance is at your disposal in the file "PFPHILFE.TXT", which can be called up from the PFP boot program by pressing the "help" button.

13.07.02 Update with SD-card

- After downloading the PFP tool and the control software, open the PFP program.
- Select the machine type and under control unit SD-CARD.
- The software version is displayed under report.



- Under **programming** copy the software to the drive with the SD-card.

- With the machine switched off insert the SD-card into the control panel.

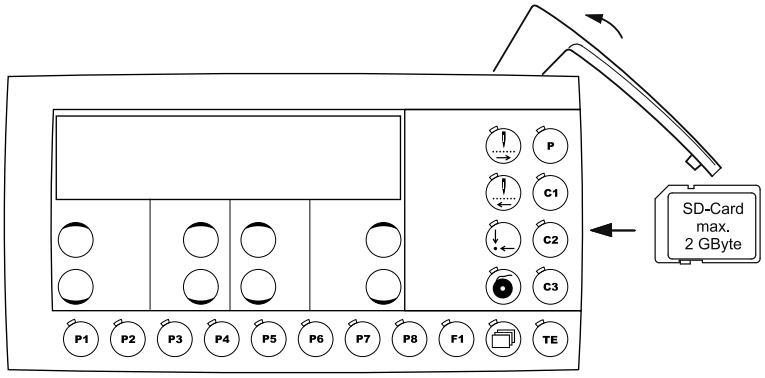

To update the machine software carry out the following steps:

While the machine software is being updated, no setting up, maintenance or adjustment work may be carried out on the machine!

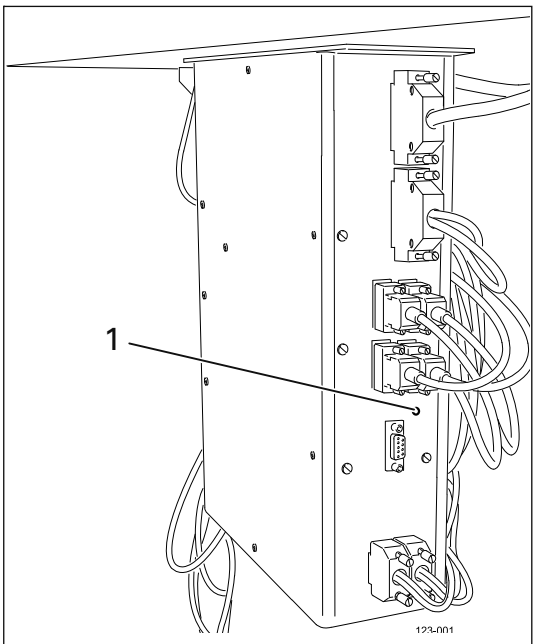

Fig. 13 - 46

- Switch on the machine, keeping the boot key **1** pressed.
- Press the "TE" key.
  The software update is carried out. During the updating process the diode in the memory card slot flashes.
- During the updating process the machine must not be switched off.
- When the update has been completed, switch off the machine and remove the SD-card.
- Switch on the machine
- A plausibility control is carried out and, if necessary, a cold start.

More information and assistance is at your disposal in the file "PFPHILFE.TXT", which can be called up from the PFP boot program by pressing the "help" button.

13.08 Error message explanations

13.08.01 General errors

Display	Description	Response
ERROR: 1	STACK_OVERFLOW processor error	Troubleshoot
ERROR: 2	STACK_UNDERFLOW processor error	Troubleshoot
ERROR: 3	UNDEF_OPCODE processor error	Troubleshoot
ERROR: 4	PROTECTION_FAULT processor error	Troubleshoot
ERROR: 5	ILLEGAL_WORD_OPERAND processor error	Troubleshoot
ERROR: 6	ILLEGAL_INSTRUCTION processor error	Troubleshoot
ERROR: 7	ILLEGAL_BUS_ACCESS processor error	Troubleshoot
ERROR: 8	NMI processor error	Troubleshoot
ERROR: 15	Checksum error in power failure backup data	Troubleshoot
ERROR: 30 (OTE-error)	OTE error	Troubleshoot
ERROR: 31 (sewing motor error)	Sewing motor error	Troubleshoot
ERROR: 50	Incorrect control panel	Switch off
ERROR: 51	Incorrect machine class in OTE (ILLEGAL IDENTITY)	Switch off
ERROR: 52	Incorrect main drive software	Switch off
ERROR: 53	Mains monitor (Bangalore) has triggered	Switch off
ERROR: 101	Mains voltage	Switch off
ERROR: 102	Mains part overload	Troubleshoot
ERROR: 103	24V too low	Troubleshoot

13.08.02 Error in production mode

Display	Description	Response
ERROR: 201 (sewing motor error)	Sewing motor error	Troubleshoot
ERROR: 202	Image too large	Troubleshoot
ERROR: 203	Sewing motor data transfer overload	Troubleshoot
ERROR: 204 (#error No.)	Tacting locked: 1 – open clamp, 2 – needle position, 3 - needle range	Troubleshoot
ERROR: 205	Movement locked (needle position)	Troubleshoot
ERROR: 206	No NIS	Troubleshoot

Display	Description	Response
ERROR: 207	Ramp not completed	Troubleshoot
ERROR: 208	Zero point not found	Troubleshoot
ERROR: 209	Sewing locked (clamp open)	Troubleshoot
ERROR: 210	Bobbin thread fault	Troubleshoot
ERROR: 211	Stich zu groß	Troubleshoot
ERROR: 212	Speicherüberlauf	Troubleshoot
ERROR: 213 (#Konv.Fehler)	Konvertierungsfehler	Troubleshoot

13.08.03 Error during output switching

Display	Description	Response
ERROR: 301	Clamp**1** open locked (needle position)	Troubleshoot
ERROR: 302	Clamp**2** open locked (needle position)	Troubleshoot
ERROR: 303	Foot open locked (needle position)	Troubleshoot
ERROR: 305	Clamp**2** closed locked (clamp **1** is open with split clamp)	Troubleshoot
ERROR: 306	Clamp**1** closed locked (clamp **2** is closed with split clamp)	Troubleshoot

13.08.04 Error in production mode

Display	Description	Response
ERROR: **401** (sewing motor error)	Sewing motor error	Troubleshoot
ERROR: 402	Sewing motor data transfer overload	Troubleshoot
ERROR: 403	Program station not programmed	Troubleshoot
ERROR: 404	Program locked	Troubleshoot
ERROR: 405	No program	Troubleshoot
ERROR: 406	No NIS	Troubleshoot
ERROR: 407	Zero points invalid	Troubleshoot
ERROR: 408	Machine not in basic position	Troubleshoot
ERROR: 409	Zero point not found	Troubleshoot
ERROR: 410	Memory overrun when writing to internal memory	Troubleshoot
ERROR: 411	No program number free	Troubleshoot
ERROR: 412	Generate memory overrun with stitch data	Troubleshoot
ERROR: **413** (#conv.error)	Conversion error	Troubleshoot
ERROR: 414	File in CMOS RAM could not be opened or read error	

Display	Description	Response
ERROR: 415	File on SD card could not be opened	
ERROR: **416** (sub-error)	SD card reader error **1**: No SD card inserted **2**: Incorrect SD card (does not fit **3108**) **3**: SD card not correctly inserted **4**: SD card write-protected **5**: Data error on SD card **6**: Formatting failed **7**: File does not fit **3108** **8**: Incorrect file size **9**: Transfer error **10**: File could not be deleted **11**: OTE not inserted	Troubleshoot
ERROR: 417	No piercing point for bobbin winding found	Troubleshoot
ERROR: 418	1. Piercing point for bobbin winding is outside sewing range	Troubleshoot
ERROR: 422	Incorrect version of machine data	Troubleshoot
ERROR: 423	Potentiometer jumper foot not configured	Troubleshoot

13.08.05 Sewing motor errors

Display	Description
1	Timeout
2	Position not reached
33	Parameter value invalid (ED)
35	Communication error
36	Init. not ready
37	Command overrun (ED)
64	Mains off during initialisation (ED)
65	Excess current directly after mains on
66	Short circuit
67	Mains off
68	Excess current during operation
70	Motor blocked
71	No incremental plug
74	Incremental encoder missing for transmission/reduction (ED)
173	Motor blocked in **1**st stitch (ED)
175	Internal starting error
222	Dead man monitoring

13.08.06 OTE-errors

Anzeige	Beschreibung
1	Read error
2	Write error
3	Full EEPROM
4	No EEPROM
5	Invalid size
6	Invalid address
7	Address overflow
8	Checksum falled
9	Serialnr. changed

13.08.07 Stitch generation errors

Display	Description
1	Incorrect machine code
2	'Clamp form' section or
	'obstacle' section missing or at incorrect position
3	Increment too large
4	Program end without thread trimming
5	Impermissible stitch length entry
6	Incorrect element in geometr. data set
7	Rapid motion although machine is sewing
8	Impermissible stitch length entry
9	Impermissible stitch length entry
10	Circle support point = circle end point
11	Division by zero
12	Impermissible stitch length entry
13	No coord. section before curve support point
14	Sewing field limit exceeded
15	Curve without end point
16	MFktBuffer overrun
17	Sewing command in loading point program
18	Incorrect curve support point
19	Incorrect curve support point
20	Incorrect curve support point
21	Incorrect curve support point
22	Stitch length not initialised
23	Loading point program not completed
24	Stitch width command in loading point program
25	Impermissible value for stitch section
26	Trimming command, although thread trimmed
27	Sewing command, although machine is sewing
28	Trimming command in sewing off range
29	Sewing off command, although thread trimmed
30	Trimming command directly after sewing command
31	Front backtack too long

14 Circuit diagrams

Reference list for circuit diagrams 91-191 543-95

A1	Quick P **320**ED control device
A2	P**1** control panel (BDF S**3** option)
A14	OTE sewing head detection
B31	Initiator (X-axis)
B32	Initiator (Y-axis)
H1	Sewing lamp
M1	Sewing motor
M2	SM**1** stepping motor (X-axis moving conjointly)
M3	SM**2** stepping motor (Y-axis stationary)
Q1	Main switch
S1	Treadle nominal value transmitter
S35	Foot switch
X1	Mains plug
X1A	P**1** control panel (BDF S**3** option)
X1B	OTE (cable)
X3	Incremental encoder (sewing motor)
X4A	M**2** stepping motor
X4B	M**3** stepping motor
X5	Inputs
X8	Sewing motor
X11A	CAN interface
X11B	Foot pedal nominal value transmitter
X13	Outputs
X30	Programmable outputs **1**+**2**
X35	S**35** foot switch
X53	Y **3**
X56	Y **6**
X57	Y **7**
X58	Y **8**
X59	Y **9**
X60	Y **10**
X61	Y **11**
X62	Y **12**
X63	Y **13**
X64	Y **14**
X65	Y **15**
X100	X-Y drive central plug

Y1	Clamp open
Y3	Clamp **1** closed left
Y4	Fadenklemme (Option)
Y6	Clamp **1** open left
Y7	Clamp **2** open right
Y8	Thread trimmer on
Y9	Thread tension up
Y10	Secondary thread tension closed (programmable output **4**)
Y11	Foot up
Y12	Thread clamp closed
Y13	Clamp **2** closed right
Y14	Hopping foot level on (programmable output **3**)
Y15	Turning cam (programmable output **1**)
Y16	Free (programmable output **2**)

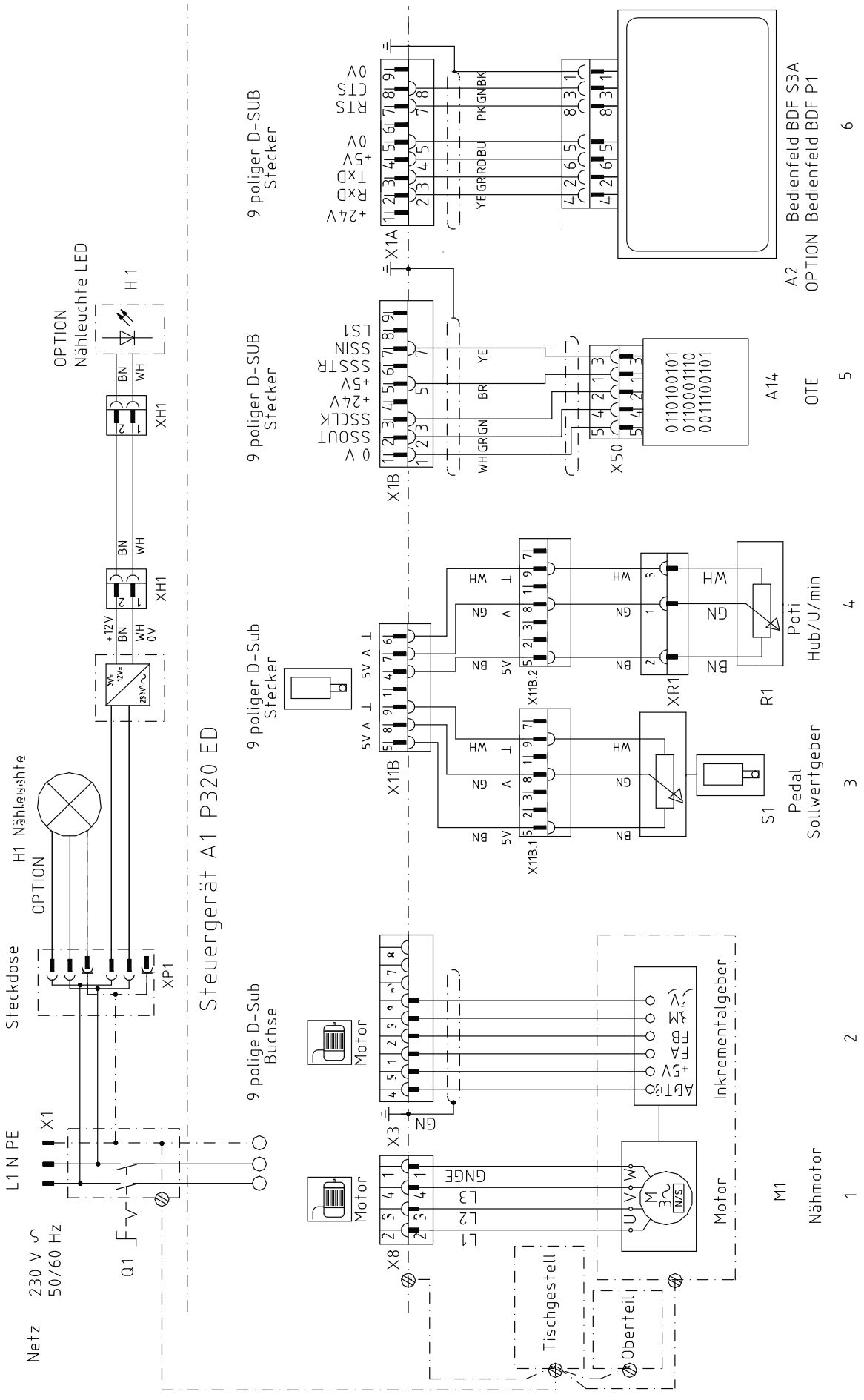
Netz
230 V ~
50/60 Hz
L1 N PE
X1
Q1
Steckdose
XP1
H1 Nähleuchte
OPTION
OPTION
Nähleuchte LED
H1
XH1
XH1
+12V
BN
WH
0V
Steuergerät A1 P320 ED
9 polige D-SUB
Buchse
9 poliger D-SUB
Stecker
9 poliger D-SUB
Stecker
9 poliger D-SUB
Stecker
X8
X3
X11B
X11B.1
X11B.2
X1B
X1A
X50
Motor
Motor
Motor
Inkrementalgeber
M1
Nähmotor
1
2
S1
Pedal
Sollwertgeber
3
XR1
R1
Poti
Hub/U/min
4
A14
OTE
5
A2
OPTION
Bedienfeld BDF S3A
Bedienfeld BDF P1
6
Tischgestell
Oberteil

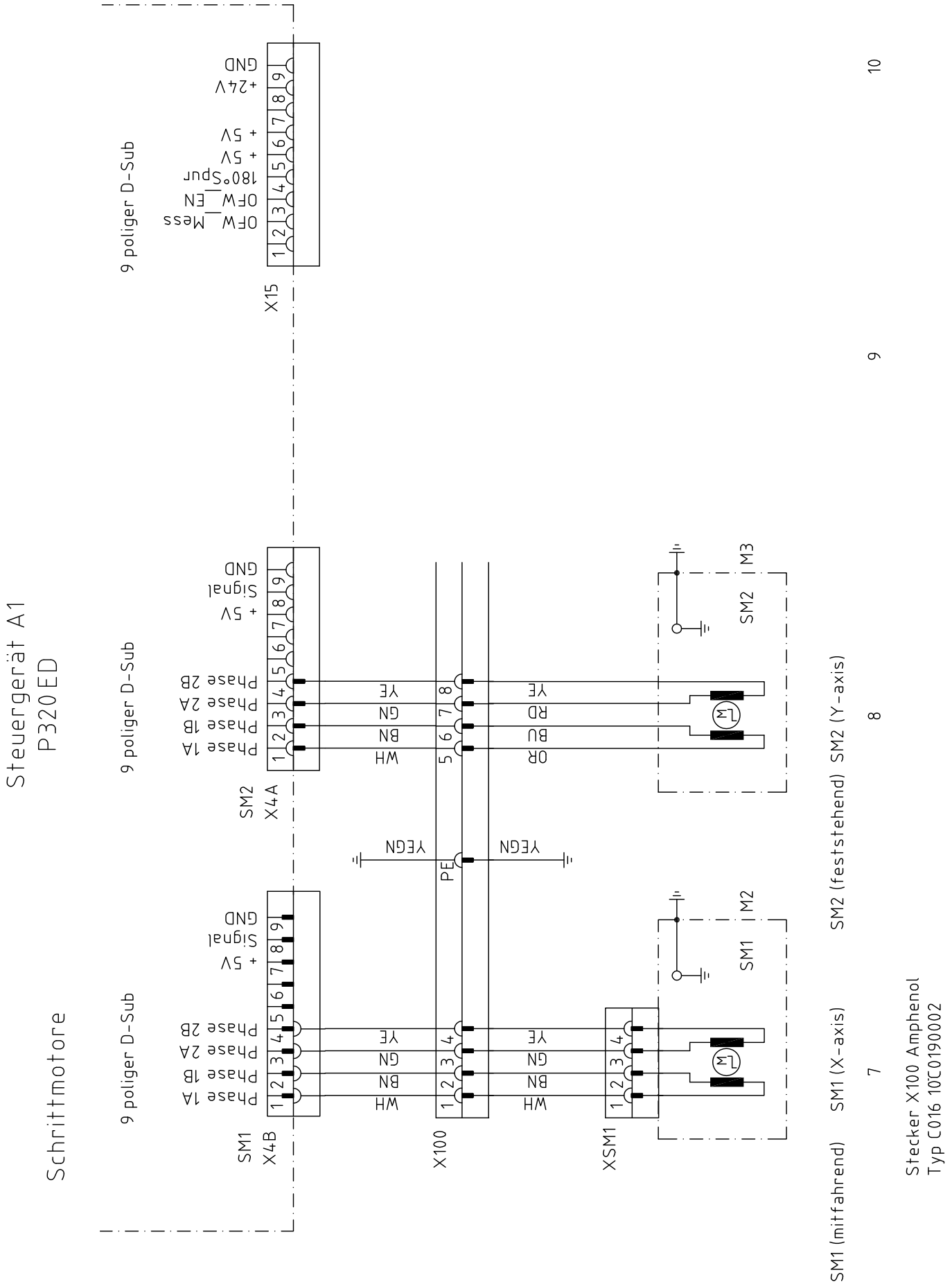
Steuergerät A1
P320ED
Schrittmotore
9 poliger D-Sub
X15
OFW_Mess
OFW_EN
180°Spur
+ 5V
+ 5V
+24V
GND
SM2
X4A
Phase 1A
Phase 1B
Phase 2A
Phase 2B
+ 5V
Signal
GND
SM1
X4B
X100
XSM1
PE
YEGN
WH
BN
GN
YE
OR
BU
RD
M1
M2
M3
SM1
SM2
SM1 (mitfahrend)
SM1 (X-axis)
SM2 (feststehend)
SM2 (Y-axis)
Stecker X100 Amphenol
Typ C016 10C0190002
10
9
8
7

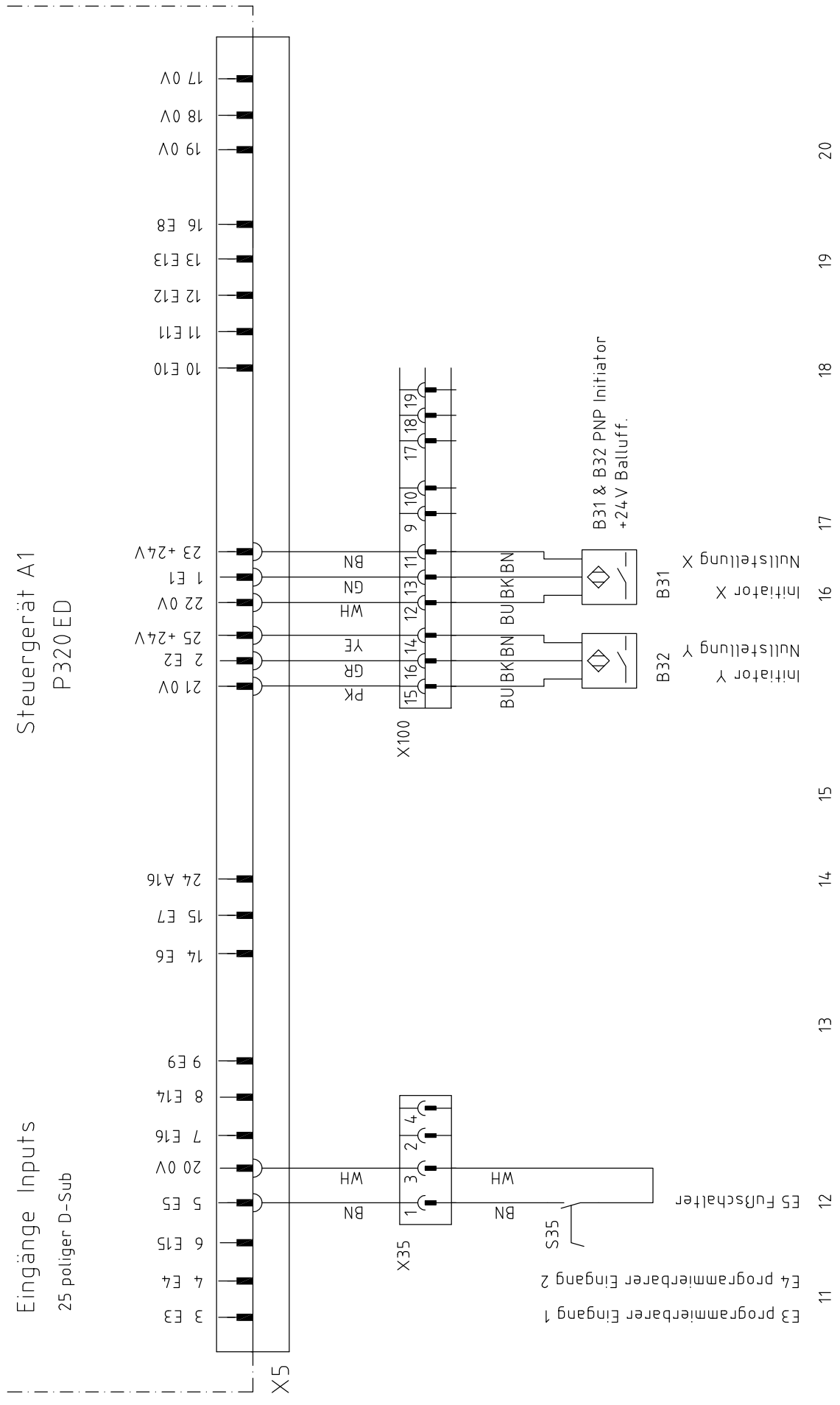
Steuergerät A1
P320ED
Eingänge Inputs
25 poliger D-Sub
X5
X100
X35
S35
B31 & B32 PNP Initiator
+24V Balluff.
B31
B32
Initiator X
Nullstellung X
Initiator Y
Nullstellung Y
E5 Fußschalter
E3 programmierbarer Eingang 1
E4 programmierbarer Eingang 2
17 0V
18 0V
19 0V
16 E8
13 E13
12 E12
11 E11
10 E10
23 +24V
1 E1
22 0V
25 +24V
2 E2
21 0V
24 A16
15 E7
14 E6
9 E9
8 E14
7 E16
20 0V
5 E5
6 E15
4 E4
3 E3
BN
GN
WH
YE
GR
PK
BU
BK
11
13
12
14
16
15
1
3
2
4
9
10
17
18
19
11
12
13
14
15
16
17
18
19
20

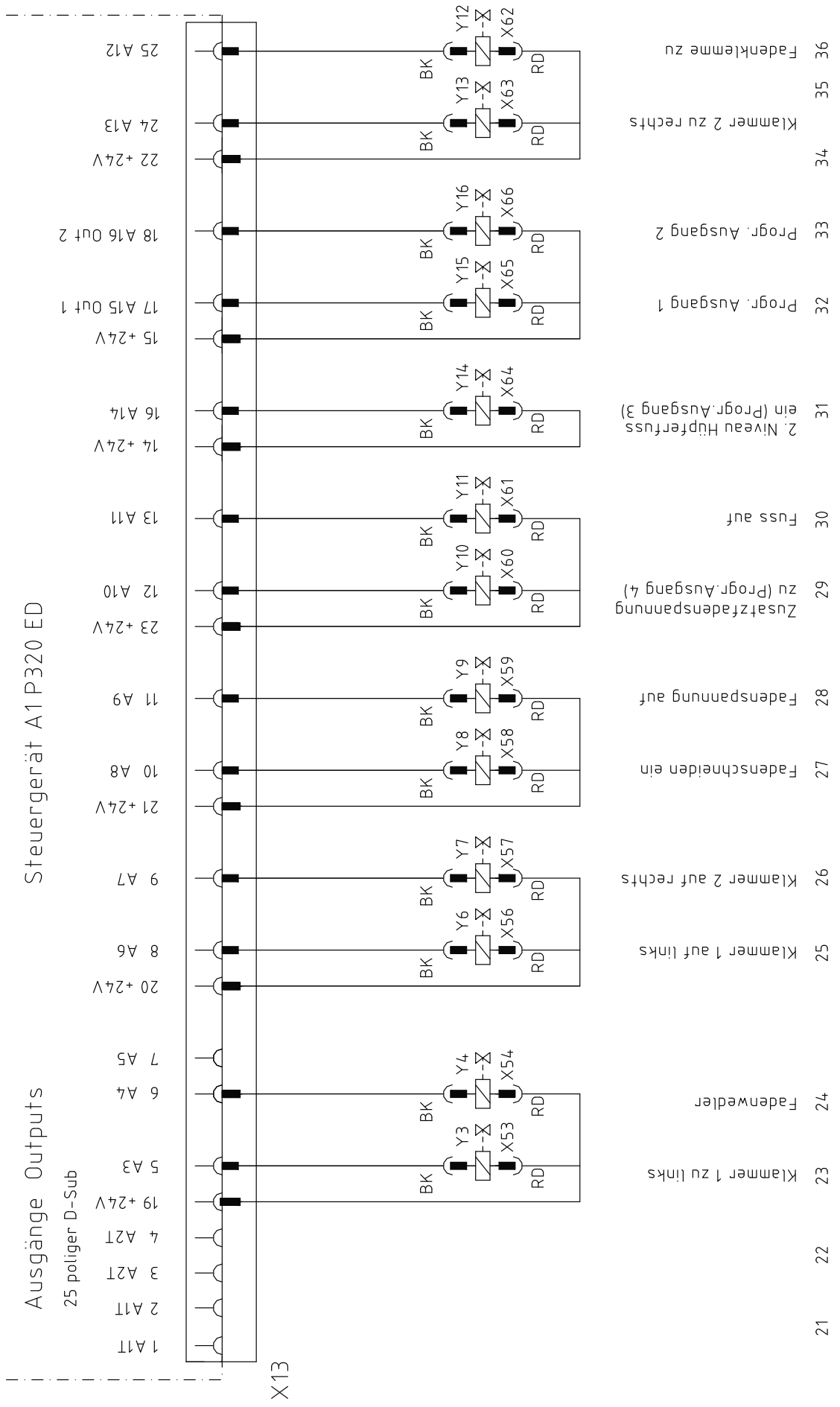
Steuergerät A1 P320 ED
Ausgänge Outputs
25 poliger D-Sub
X13
1 A1T
2 A1T
3 A2T
4 A2T
19 +24V
5 A3
6 A4
7 A5
20 +24V
8 A6
9 A7
21 +24V
10 A8
11 A9
23 +24V
12 A10
13 A11
14 +24V
16 A14
15 +24V
17 A15 Out 1
18 A16 Out 2
22 +24V
24 A13
25 A12
Fadenwedler
Klammer 1 zu links
Klammer 1 auf links
Klammer 2 auf rechts
Fadenschneiden ein
Fadenspannung auf
Zusatzfadenspannung zu (Progr.Ausgang 4)
Fuss auf
2. Niveau Hüpferfuss ein (Progr.Ausgang 3)
Progr. Ausgang 1
Progr. Ausgang 2
Klammer 2 zu rechts
Fadenklemme zu
BK
RD
Y3
Y4
Y6
Y7
Y8
Y9
Y10
Y11
Y13
Y12
Y14
Y15
Y16
X53
X54
X56
X57
X58
X59
X60
X61
X63
X62
X64
X65
X66

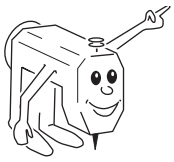

Note

PFAFF® Industrial



Europäische Union
Wachstum durch Innovation – EFRE



PFAFF Industriesysteme
und Maschinen AG

Hans-Geiger-Str. 12 - IG Nord
D-67661 Kaiserslautern

Phone: +49-6301 3205 - 0
Fax: +49-6301 3205 1386
E-mail: info@pfaff-industrial.com

Hotlines:

Technical service:	+49-175/2243-101
Application consultance:	+49-175/2243-102
Spare-parts hotline:	+49-175/2243-103

Printed in Germany

© PFAFF Industriesysteme und Maschinen AG 2009, PFAFF is the exclusive trademark of VSM Group AB.PFAFF Industriesysteme und Maschinen AG is an authorized licensee of the PFAFF trademark.