PFAFF® Industrial

3119

INSTRUCTION MANUAL

This instruction manual applies to machines from software version **0365/001** and serial number **2 738 201** onwards

296-12-18 958/002
Betriebsanleitung engl. 06.09



This instruction manual applies to all versions and subclasses listed under "Specifications".

Reprinting, copying or translation of PFAFF instruction manuals, whether in whole or in part, is not permitted without our prior permission and not without written indication of the source.

PFAFF Industriesysteme
und Maschinen AG

Hans-Geiger-Str. 12 - IG Nord
D-67661 Kaiserslautern

Contents .....Page

1	**Safety**	7
1.01	Regulations	7
1.02	General notes on safety	7
1.03	Safety symbols	8
1.04	Important notes for the user	8
1.05	Notes for operating and technical staff	9
1.05.01	Operating staff	9
1.05.02	Technical staff	9
1.06	Danger warnings	10
2	**Proper use**	11
3	**Specifications**	12
3.01	General information	12
3.02	Stitch formation of the various sub-classes	13
4	**Disposal of Machine**	14
5	**Transportation, packing and storage**	15
5.01	Transportation to customer's premises	15
5.02	Transportation inside the customer's premises	15
5.03	Disposal of packing materials	15
5.04	Storage	15
6	**Explanation of symbols**	16
7	**Controls**	17
7.01	Main switch	17
7.02	Switch for separate compressor (optional)	17
7.03	Pedal	18
7.04	Preventing knife engagement	18
7.05	Control panel	19
7.05.01	Display symbols	19
7.05.02	General key functions	19
7.05.03	Further key functions in the buttonhole mode	21
7.05.04	Other key functions in the bartack mode	22
7.05.05	Further key functions in the activated sequence mode	23
8	**Mounting and commissioning the machine**	24
8.01	Installation	24
8.01.01	Adjusting the table height	24
8.01.02	Installation variants	25
8.01.03	Table top drilling template (installed parallel to the table edge)	26
8.01.04	Table top drilling template (installed crosswise to the table edge)	27
8.01.05	Connecting the plug connections and earth cables	28

Contents ..... Page

8.01.06 Fitting the reel stand 29
8.02 Commissioning 29
8.03 Switching the machine on / off 29
8.04 Setting up the machine control unit 30
8.04.01 Establishing the sub-class 30
8.04.02 Setting parameter "202" 31

9 Setting up 32
9.01 Inserting the needle 32
9.02 Winding the bobbin thread / adjusting the preliminary thread tension 33
9.03 Threading the bobbin case / adjusting the bobbin thread tension 34
9.04 Changing the bobbin 35
9.05 Threading the needle thread 36
9.06 Selecting the operating mode 37
9.07 Selecting the type of buttonhole / bartack 38
9.08 Adjusting the needle thread tension 39
9.09 Adjusting the work clamp pressure 40
9.10 Inserting and removing the SD-memory card 40
9.11 Position of the needle to the workpiece 41
9.12 Activating the sequence mode 42

10 Sewing 43
10.01 Sewing in the buttonhole mode 43
10.01.01 Control panel with speed or buttonhole model display 43
10.01.02 Selecting the buttonhole 44
10.01.03 Entering the knife length and cut overlap 45
10.01.04 Altering the buttonhole width and seam correction 46
10.01.05 Altering the cutting width and cutting length correction 47
10.02 Sewing in the bartack mode 48
10.01.01 Control panel with speed or bartack type display 48
10.02.02 Selecting the bartack 49
10.03 Error messages 50

11 Input 51
11.01 Summary of the function groups and parameters 51
11.02 Selecting the function group and altering the parameters 52
11.03 Entering / altering the access code 53
11.04 Allocating access rights 54
11.05 Variable programs 55
11.05.01 Copying programs 55
11.05.02 Creating / modifying vario programs in the buttonhole mode 57
11.05.03 Creating / modifying vario programs in the bartack mode 58
11.05.04 Buttonhole and bartack model 59
11.05.05 Table for entering a buttonhole program 63
11.05.06 Table for entering a bartack program 64

Contents .....Page

11.06	Sequences	65
11.06.01	Creating sequences	65
11.07	Selecting programs	68
11.08	Special programs	69
11.09	SAM (Sewing Application Manager)	69
11.10	Program Management	69
11.10.01	Calling up the program management	70
11.10.02	Display of the data in the machine memory	71
11.10.03	Display of the data on the SD-memory card	72
11.10.04	Copying data onto the SD-memory card	73
11.10.05	Copying data into the machine memory	74
11.10.06	Deleting data in the machine memory	75
11.10.07	Deleting data from the SD-memory card	76
11.10.08	Formatting the SD-memory card	77
12	**Care and maintenance**	**78**
12.01	Maintenance intervals	78
12.02	Cleaning the machine	78
12.03	Cleaning the hook compartment	79
12.04	Cleaning the air filter of the air-filter / lubricator	80
12.05	Checking/adjusting the air pressure	80
12.06	Check oil level for needle drive unit	81
12.07	Check oil level for the hook	81
12.08	Check oil level for the compressor	81
13	**Adjustment**	**82**
13.01	Notes on adjustment	82
13.02	Tools, gauges and other accessories	82
13.03	Abbreviations	82
13.04	Toothed belts of the hook drive unit	83
13.05	Drive rods of the bobbin thread trimming device	84
13.06	Switch for sewing start	85
13.07	Basic position of the feed drive unit	86
13.08	Preliminary adjustment of the work clamp	87
13.09	Toothed belts of the main drive unit	88
13.10	Preliminary adjustment of the needle height	89
13.11	Position of the needle plate in relation to the needle	90
13.12	Controlling the stitch symmetry	91
13.13	Sensor board of the needle drive (in dismantled state)	92
13.14	Basic setting of the needle drive unit	94
13.15	Basic position of the work clamp (lengthwise to the arm)	95
13.16	Basic position of the work clamp (crosswise to the arm)	96
13.17	Upper take-up lever position (reference position)	97
13.18	Lifting elbow on the work clamp	98
13.19	Work clamp stroke	99

Contents ..... Page

13.20	Lifting cylinder of the work clamp	100
13.21	Cutting pressure of the knife unit (in dismantled state)	101
13.22	Position of the knife bracket and lower knife stop	102
13.23	Upper knife stop	104
13.24	Knife control switch	105
13.25	Knife motion	106
13.26	Distance of the knife to the needle bar	107
13.27	Changing the knife / knife height	108
13.28	Functional test of needle thread cutter	109
13.29	Needle thread cutter (vertical and horizontal adjustment)	110
13.30	Cam guide unit	111
13.31	Needle thread cutter stroke	112
13.32	Needle thread cutter switch	113
13.33	Needle thread cutter release	114
13.34	Catch	115
13.35	Swing out motion of the needle thread cutter	116
13.36	Needle bar rise and hook-to-needle clearance	117
13.37	Needle bar height and needle guard	119
13.38	Bobbin case holder	120
13.39	Hook lubrication	121
13.40	Knife position	122
13.41	Knife guard	123
13.42	Needle thread tension release	124
13.43	Needle thread puller	125
13.44	Side thread tension and slack thread regulator	126
13.45	Bobbin winder	127
13.46	Retainer position (only for 3119-2/62 and -2/63)	128
13.47	Carrying out a cold start	129
13.48	Parameter settings	130
13.48.01	Selecting and altering parameters	130
13.48.02	List of parameters	131
13.49	Malfunctions	138
13.49.01	Error messages	138
13.49.02	Motor errors	140
14	**Wearing parts**	**141**
15	**Circuit diagrams**	**143**

1 Safety

1.01 Directives

The machine has been constructed in accordance with the requirements listed in the EC Declaration of Conformity and the Declaration of Incorporation.
In addition to this Instruction Manual, also observe all generally accepted, statutory and other regulations and legal requirements and all valid environmental protection regulations! The regionally valid regulations of the social insurance society for occupational accidents or other supervisory organizations are to be strictly adhered to!

1.02 General notes on safety

- This machine may only be operated by adequately trained operators and only after having completely read and understood the Instruction Manual!
- All Notes on Safety and Instruction Manuals of the motor manufacturer are to be read before operating the machine!
- The danger and safety instructions on the machine itself are to be followed!
- This machine may only be used for the purpose for which it is intended and may not be operated without its safety devices. All safety regulations relevant to its operation are to be adhered to.
- When exchanging sewing tools (e.g. needle, roller presser, needle plate and bobbin), when threading the machine, when leaving the machine unattended and during maintenance work, the machine is to be separated from the power supply by switching off the On/Off switch or by removing the plug from the mains!
- Everyday maintenance work is only to be carried out by appropriately trained personnel!
- Repairs and special maintenance work may only be carried out by qualified service staff or appropriately trained personnel!
- Work on electrical equipment may only be carried out by appropriately trained personnel!
- Work is not permitted on parts and equipment which are connected to the power supply! The only exceptions to this rule are found in the regulations EN 50110.
- Modifications and alterations to the machine may only be carried out under observance of all the relevant safety regulations!
- Only spare parts which have been approved by us are to be used for repairs! We expressly point out that any replacement parts or accessories which are not supplied by us have not been tested and approved by us. The installation and/or use of any such products can lead to negative changes in the structural characteristics of the machine. We are not liable for any damage which may be caused by non-original parts.

1.03 Safety symbols



Danger!

Special points to observe.



Danger of injury to operating or technical staff!



Caution

Do not operate without finger guard and safety devices.

Before threading, changing bobbin and needle, cleaning etc. **switch off main switch**.

1.04 Important notes for the user

- This instruction manual belongs to the equipment of the machine and must be available to the operating staff at all times.
- This instruction manual must be read before the machine is operated for the first time.
- Both operating and technical staff must be instructed on the safety devices of the machine and on safe working methods.
- It is the duty of the user to operate the machine in perfect running order only.
- The user must ensure that none of the safety devices are removed nor put out of working order.
- The user must ensure that only authorized persons operate and work on the machine.

For further information please refer to your PFAFF agency..

1.05 Notes for operating and technical staff

1.05.01 Operating staff

Operating staff are the persons responsible for setting up, operating and cleaning the machine and for eliminating any malfunctioning in the sewing area.

The operating staff is obliged to observe the following points:

- The notes on safety in this instruction manual must always be observed!
- Any working methods, which adversely affect the safety of the machine, must be avoided.!
- Loose-fitting clothing should be avoided. No jewellery, such as chains and rings, should be worn!
- Ensure that only authorised persons enter the danger area of the machine!
- Any changes occurring on the machine, which may affect its safety, must be reported to the user immediately.

1.05.02 Technical staff

Technical staff are persons who have been trained in electrical engineering/electronics and mechanical engineering. They are responsible for lubricating, servicing, repairing and adjusting the machine.

The technical staff is obliged to observe the following points:

- The notes on safety in this instruction manual must always be observed!
- Before carrying out any adjustment or repair work the main switch must be switched off and measures taken to prevent it from being switched on again!
- Never work on parts or equipment still connected to the power supply! Exceptions are only permissible in accordance with the regulations EN 50110.
- All safety covers must be replaced after the completion of maintenance or repair work!

1.06 Danger warnings

A working area of **1 m** must be kept free both in front of and behind the machine, so that easy access is possible at all times.

Never put your hands in the sewing area during sewing!

Danger of injury by the needle!

During maintenance and adjustment work the knife must be secured with locking device **1.** Danger of injury from the knife!

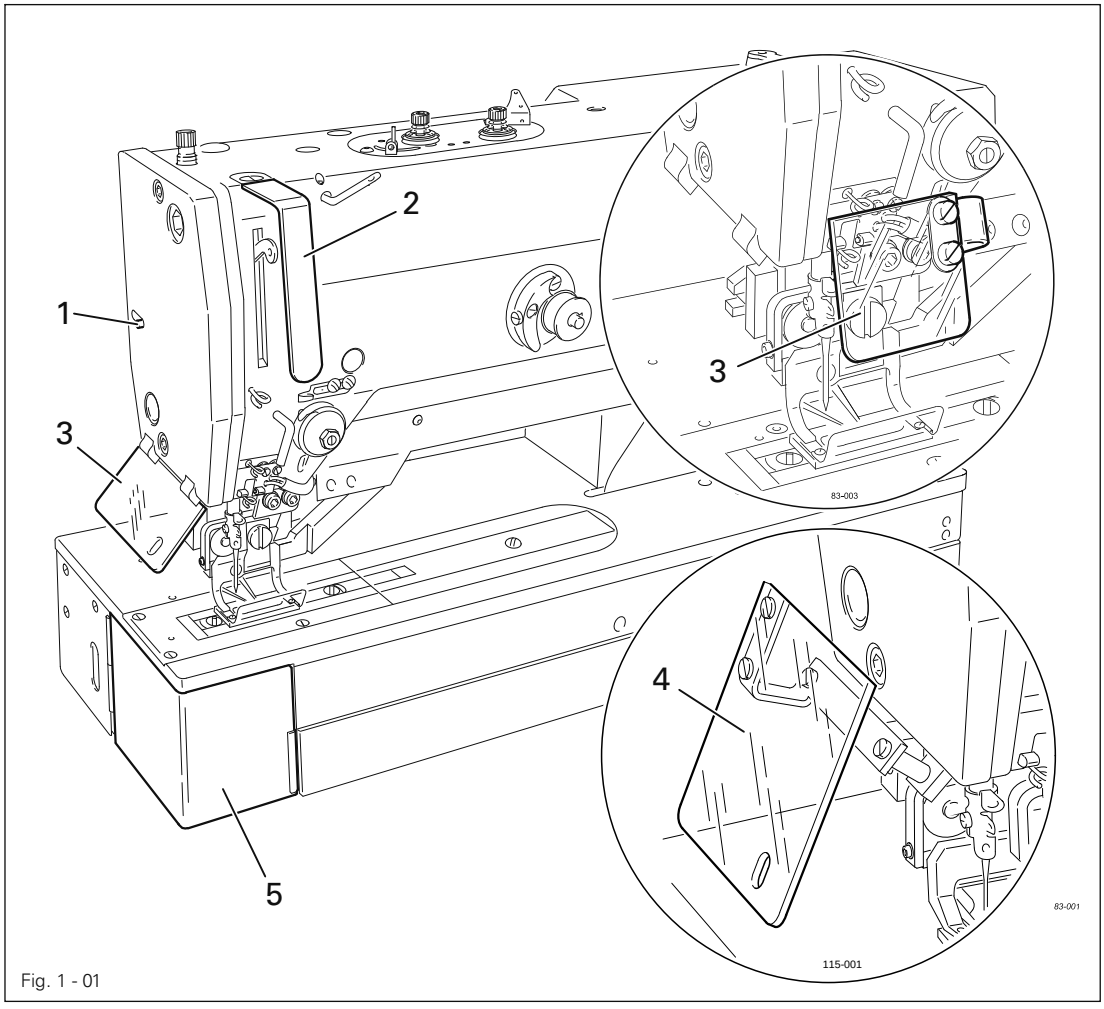

Fig. 1 - 01

Do not operate the machine without the take-up lever guard **2!**

Danger of injury from the movement of the take-up lever.

Do not operate the machine without eye shield **3** or **4!**

Danger of injury from needle splinters! The type of eye shield is dependent on the way the machine is installed.

Only operate the machine with cover **5** closed.

Danger of injury from the hook!

2 Proper use

The **PFAFF 3119-1/51,** PFAFF **3119-1/52** and PFAFF **3119-2/52** are used for sewing raised or flat buttonholes with two flat or raised square bars on fine materials in the linen and clothing

The **PFAFF 3119-2/53,** PFAFF **3119-3/51** and PFAFF **3119-4/51** are used for sewing raised or flat buttonholes with two flat or raised square bars on medium materials in the linen and clothing industry.

The **PFAFF 3119-2/6** and PFAFF **3119-2/63** are used for sewing raised or flat buttonholes with two flat or raised square bars on delicate knitted fabrics in the linen and clothing industry.

The **PFAFF 3119-5/51** is used for producing openings for safety belts in the automobile industry.



Any use of these machines which is not approved by the manufacturer shall be considered as improper use! The manufacturer shall not be liable for any damage arising out of improper use! Proper use shall also be considered to include compliance with the operation, adjustment, service and repair measures specified by the manufacturer!

3 Specifications▲

3.01 General information

Max. sewing speed: ..... 4200 min^{-1}
Stitch type: 304
Needle bar stroke: ..... 34.5 mm
Max. thickness of workpiece: ..... max. 3 mm
Max. work clamp clearance: ..... max. 12.5 mm
Fabric clearance (crosswise to sewing arm): ..... 235 mm
Fabric clearance (lengthwise to sewing arm): ..... 30 mm
Stitch formation ..... buttonhole, max. 70 mm x 6.0 mm
Length of buttonhole cut: ..... 6.4 mm – 64.6 mm
Zig-zag stitch: ..... max. 6.0 mm
Number of stitches: ..... freely programmable
Feed type: ..... intermittent

Power supply: ..... 230 V ± 10%, 50/60 Hz, single phase
Power consumption: ..... max. 0.6 KVA
Input power rating: ..... 0.7 kVA
Fuse protection: ..... 1 x 16A, inert
Software status: ..... see parameter "104"

Working air pressure: ..... 6 bar
Air consumption ..... ~1.2 l / work cycle

Noise data:
Emission sound level at workplace with a sewing cycle of
4 sec. On and 2 sec. Off: ..... L_{pA} = 78 dB(A) n
(Noise measurement in accordance with DIN 45 635-48-B-1, ISO 11204, ISO 3744, ISO 4871)

Sewing head dimensions:
Length: ..... approx. 514 mm
Width: ..... approx. 200 mm
Height: ..... approx. 450 mm
Weight of sewing head: ..... approx. 65 kg

Dimensions of base:
Length: ..... approx. 1060 mm
Width: ..... approx. 600 mm
Height ..... approx. 820 mm
Weight of base incl. control box: ..... approx. 45 kg

Needle system: 438
Needle size for fine materials: ..... 60 - 70
Needle size for medium-weight materials: ..... 80 - 100 0

▲ Subject to alteration

■ K_{pA} = 2,5 dB

3.02 Stitch formation of the various sub-classes

Sub-class	-1/51 -1/52	-2/51 -2/62	-2/53 -2/63	-3/51	-4/51	-5/51
Cut-out size in work clamp [mm]	30,0 x 5,6	40,0 x 5,6 44,0 x 6,0	40,0 x 6,7 44,0 x 7,0	46,0 x 6,7	55,0 x 7,0	77,0 x 7,0
Buttonhole size [mm]	min. 9,0 x 2,0 max. 24,0 x 4,4	min. 9,0 x 2,0 max. 34,0 x 4,4	min. 9,0 x 2,0 max. 34,0 x 5,4	min. 9,0 x 2,0 max. 40,0 x 5,4	min. 9,0 x 2,0 max. 48,0 x 5,4	min. 9,0 x 2,0 max. 70,0 x 6,0
Length of buttonhole cut [mm]	6,4 9,5 11,0 12,7 14,0 16,0 17,5	6,4 9,5 11,0 12,7 14,0 16,0 17,5 19,0 22,2 25,4	6,4 9,5 11,0 12,7 14,0 16,0 17,5 19,0 22,2 25,4	6,4 9,5 11,0 12,7 14,0 16,0 17,5 19,0 22,2 25,4 28,6 31,7*	6,4 9,5 11,0 12,7 14,0 16,0 17,5 19,0 22,2 25,4 28,6 31,7* 33,7 35,0 36,5 38,1	6,4 9,5 11,0 12,7 14,0 16,0 17,5 19,0 22,2 25,4 28,6 31,7 33,7 35,0 36,5 38,1 to 45* 64,6

* On subclasses -**3/51** and -**4/51,** for a cutting length of **31.7** mm and more, the knife must be at least **16.0 mm** long. On the subclass -**5/51,** for a cutting length of **45 mm** and more, the knife must be at least **22.2 m** long.

Each time parts are changed, the control unit must be adapted to the sub-class, see Chapter Kapitel **8.04 Setting up the machine control unit**. An incorrect setting can cause the knife or needle to strike the work clamp.

4 Disposal of Machine

- Proper disposal of the machine is the responsibility of the customer.
- The materials used for the machine are steel, aluminium, brass and various plastic materials. The electrical equipment comprises plastic materials and copper.
- The machine is to be disposed of according to the locally valid pollution control regula-tions; if necessary, a specialist ist to be commissioned.



Care must be taken that parts soiled with lubricants are disposed of separately according to the locally valid pollution control regulations!

5 Transportation, packing and storage

5.01 Transportation to customer's premises

The machines are delivered completely packed.

5.02 Transportation inside the customer's premises

The manufacturer cannot be made liable for transportation inside the customer's premises nor to other operating locations. It must be ensured that the machines are only transported in an upright position.

5.03 Disposal of packing materials

The packing materials of this machine comprise paper, cardboard and VCE fibre. Proper disposal of the packing material is the responsibility of the customer.

5.04 Storage

If the machine is not in use, it can be stored as it is for a period of up to six months, but It should be protected against dust and moisture.
If the machine is stored for longer periods, the individual parts, especially the surfaces of moving parts, must be protected against corrosion, e.g. by a film of oil.

6 Explanation of symbols

In this instruction manual, work to be carried out or important information is accentuated by symbols. These symbols have the following meanings:



Note, information



Cleaning, care



Lubrication

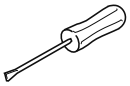

Maintenance, repairs, adjustment, service work
(only to be carried out by technical staff)

7 Controls

7.01 Main switch

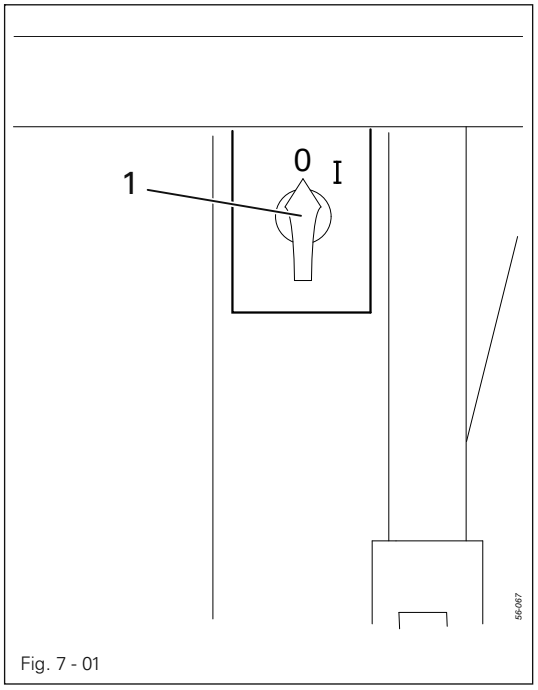

Fig. 7 - 01

- The machine is switched on or off by turning the main switch **1.**

7.02 Switch for separate compressor (optional)

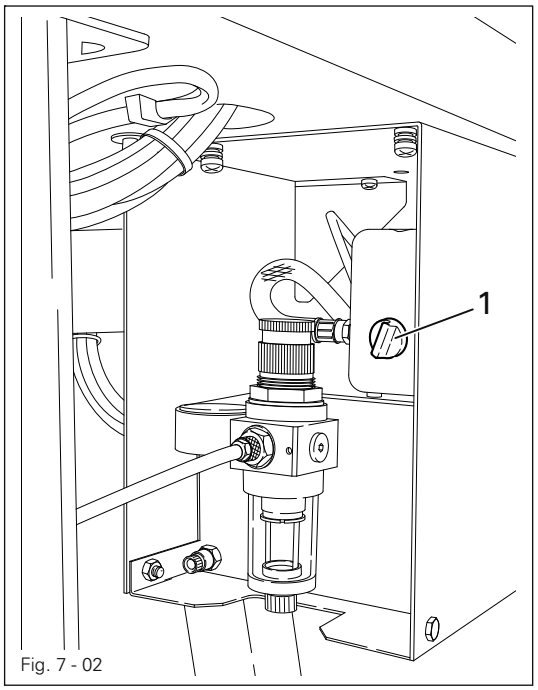

Fig. 7 - 02

- Turn the compressor on or off by turning switch **1.**



Before starting the machine, switch on the compressor and wait until the manometer displays a pressure of **6** bar.

If the pressure is too low, an error message will appear on the display.

7.03 Pedal

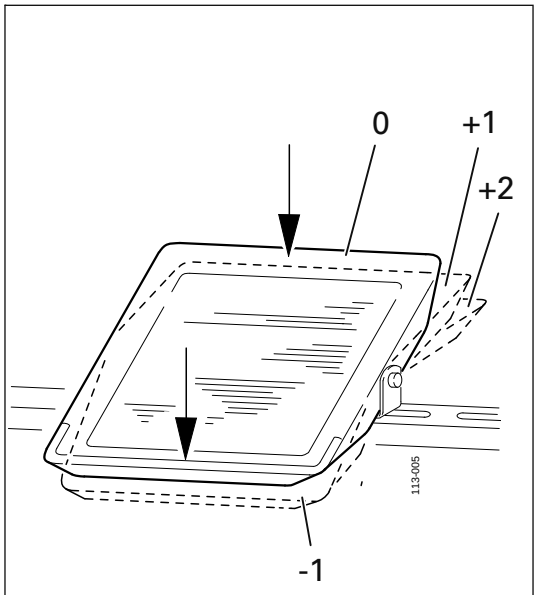

Fig. 7 - 03

-1 = Prevent knife engagement at end of current sewing cycle
0 = Neutral position
+1 = Work clamp lowered
+2 = Sewing

7.04 Preventing knife engagement

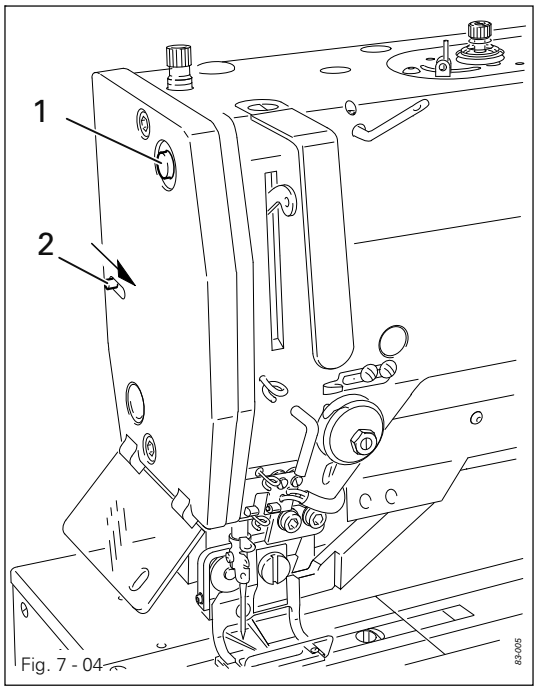

Fig. 7 - 04

- By operating push button **1,** knife engagement at the end of the current sewing cycle is prevented.
- By moving lever **2** in the direction of the arrow, the knife is mechanically locked. This prevents knife engagement during setting-up, maintenance and adjustment work.

7.05 Control panel

The keys on control panel 1 are used for selecting machine functions for setting-up purposes, for sewing operations and for entering parameters. The functions of the program keys depend among other things on the selected operating mode and whether the sequence mode is activated, see Chapter **9.06 Selecting the operating mode** or Chapter **9.11 Activating the sequence mode**.

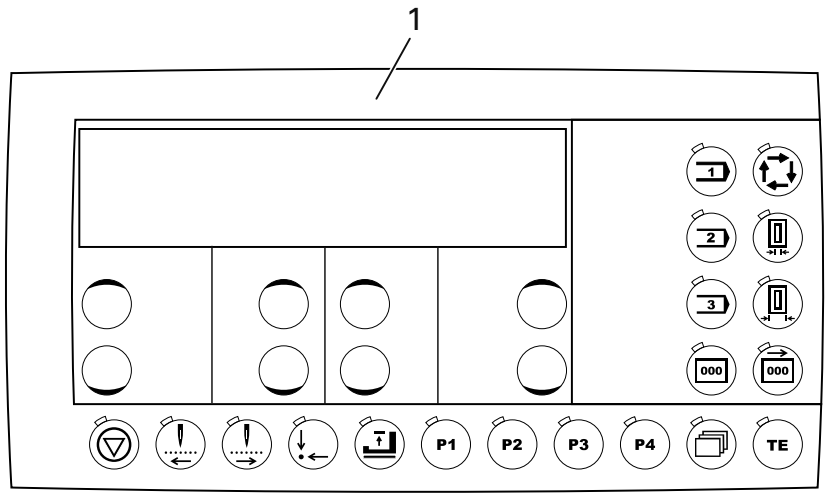

Fig. 7 - 05

7.05.01 Display symbols

	Maximum speed		Bartack width
	Cutting length		Stitch density
	Piece or reverse counter		Bartack extension
	Buttonhole or bartack model		Machine memory
	"Enter" function		SD-memory card
	"Cut open" function		

7.05.02 General key functions

Plus/minus keys

By pressing and holding the corresponding **plus/minus key**, the function displayed above it is carried out or the value located above it is altered.

To begin with the value is changed slowly by pressing and holding the key. If the **plus/minus key** is held down longer, the value changes more quickly.

In the following description each of the **plus/minus keys** mentioned are shown as illustrated opposite.

Stop
- When operated during a sewing cycle, the machine is stopped.
- If operated outside a sewing cycle, the winding operation is started/stopped.
- When entering the code number this key corresponds to the figure 1.



When moving step-by-step through the sewing cycle, all cutting procedures will be carried out! Danger of injury if the knife engages!

Tacting in reverse
- Tacting in reverse through the whole sewing cycle step by step.
- When entering the code number, this key corresponds to the number 2

Tacting forwards
- Tacting forwards through the whole sewing cycle step by step.
- When entering the code number, this key corresponds to the number 3.

Basic position
- In the operational mode Sewing the machine moves to the basic position.
- When entering the code number, this key corresponds to the number 4.

Work clamp raised / lowered
- In the operational mode Sewing the work clamp is raised/lowered.
- When entering the code number, this key corresponds to the number 5.

P1
- Quick selection key for variable and special programs.
- When entering the code number, this key corresponds to the number 6.

P2
- Quick selection key for variable and special programs.
- When entering the code number, this key corresponds to the number 7.

P3
- Quick selection key for variable and special programs.
- When entering the code number, this key corresponds to the number 8.

P4
- Quick selection key for variable and special programs.
- When entering the code number, this key corresponds to the number 9.

Scrolling
- In the sewing mode this key is used to switch between speed display and seam pattern display.



Using the keys described below, each of which has an LED, depending on the mode selected, further functions can be called up. When the LED lights up the corresponding function is activated / switched on.

7.05.03 Further key functions in the buttonhole mode

When selecting lthe buttonhole mode, see Chapter **9.06 Selecting the operating mode**, the function of the keys depends on the screen display, see Chapter **10 Sewing**.

If the program number is shown on the display instead of the cutting length, the following **3** keys serve as station keys for vario and special programs.



- When the cut length is displayed, the machine switches to **coarse** using the stitch density.



- When the cut length is displayed, the machine switches to **medium** using the stitch density.



- When the cut length is displayed, the machine switches to **fine** using the stitch density.



Buttonhole width/seam correction

- After this function has been activated, the current values for the buttonhole width (left) and seam correction (right) are shown on the display and can be changed respectively with the corresponding plus/minus key.



Cutting width/cutting length correction

- After this function has been activated, the current values for the cutting width (left) and the seam and cutting length correction (right) are shown on the display and can be changed respectively with the corresponding plus/minus key.



Sewing mode / Input

- This key can be used to switch between the sewing mode (LED off) and input mode (LED on).
- After the elimination of an error, this key is used to acknowledge the error message.



Double sewing cycle

- After this function has been activated, the buttonholes are sewn twice.

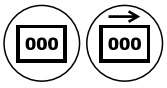

Piece counter / reverse counter

- When one of these functions is selected, the other function is deactivated.
  When the function is selected, the current value appears on the right hand side of the screen, the set value appears on the screen after the key is pressed twice and can be altered with the corresponding **plus / minus key**.
- When entering the code number, the piece counter key corresponds to the number **0.**

7.05.04 Other key functions in the bartack mode

When the bartack mode has been selected, see Chapter **9.06 Selecting the operating mode**, the function of the keys depends on the screen display, see Chapter **10 Sewing**.
If the program number is shown on the display instead of the bartack length, the following **3** keys serve as station keys for vario and special programs.



- If the bartack length is shown on the display, a previously created bartack is activated.



- If the bartack length is shown on the display, a previously created bartack is activated.



- If the bartack length is shown on the display, a previously created bartack is activated.



1st seam (forwards seam)

- After this function has been activated, the current values of the forwards seam for bartack width (left) stitch length (centre) and bartack length correction (right) are shown on the display and can be changed respectively with the corresponding **plus/minus key**.



2nd seam (reverse seam)

- After this function has been activated, the current values of the reverse seam for bartack width (left) stitch length (centre) and cutting width (right) are shown on the display and can be changed respectively with the corresponding **plus/minus key** (does not apply to bartack type "35").



Sewing mode / Input

- This key can be used to switch between the sewing mode (LED off) and input mode (LED on).
- After the elimination of an error, this key is used to acknowledge the error message.

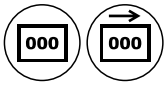

Piece counter / reverse counter

- When one of these functions is selected, the other function is deactivated.
  When the function is selected, the current value appears on the right hand side of the screen, the set value appears on the screen after the key is pressed twice and can be altered with the corresponding **plus / minus key.**
- When entering the code number, the piece counter key corresponds to the number **0.**

7.05.05 Further key functions in the activated sequence mode

When the sequence mode has been activated, see Chapter **9.11 Activating the sequence mode**, the other keys have the functions described below.

The following 3 keys serve as station keys for the sequences, also see Chapter **11.06.01 Creating sequences.**



- The sequence entered under parameter "**111**" is activated



- The sequence entered under parameter "**112**" is activated



- The sequence entered under parameter "**113**" is activated



Sewing mode / Input

- This key can be used to switch between the sewing mode (LED off) and input mode (LED on).
- After the elimination of an error, this key is used to acknowledge the error message.

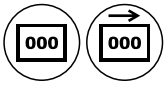

Piece counter / reverse counter

- When one of these functions is selected, the other function is deactivated.
  When the function is selected, the current value appears on the right hand side of the screen, the set value appears on the screen after the key is pressed twice and can be altered with the corresponding **plus / minus key**.
- When entering the code number, the piece counter key corresponds to the number **0.**

8 Mounting and commissioning the machine

The machine must only be mounted and commissioned by qualified personnel! All relevant safety regulations are to be observed!

If the machine is delivered without a table, be sure that the frame and the table top which you intend to use can hold the weight of the machine and the motor. It must be ensured that the supporting structure is sufficiently sturdy, even during sewing operations.

8.01 Installation

The site where the machine is installed must be provided with suitable connections for the electric current, see Chapter **3 Specifications**.
It must also be ensured that the standing surface of the machine site is firm and horizontal, and that sufficient lighting is provided.

8.01.01 Adjusting the table height

For packing reasons the table top is in the lowered position. The table height is adjusted as described below..

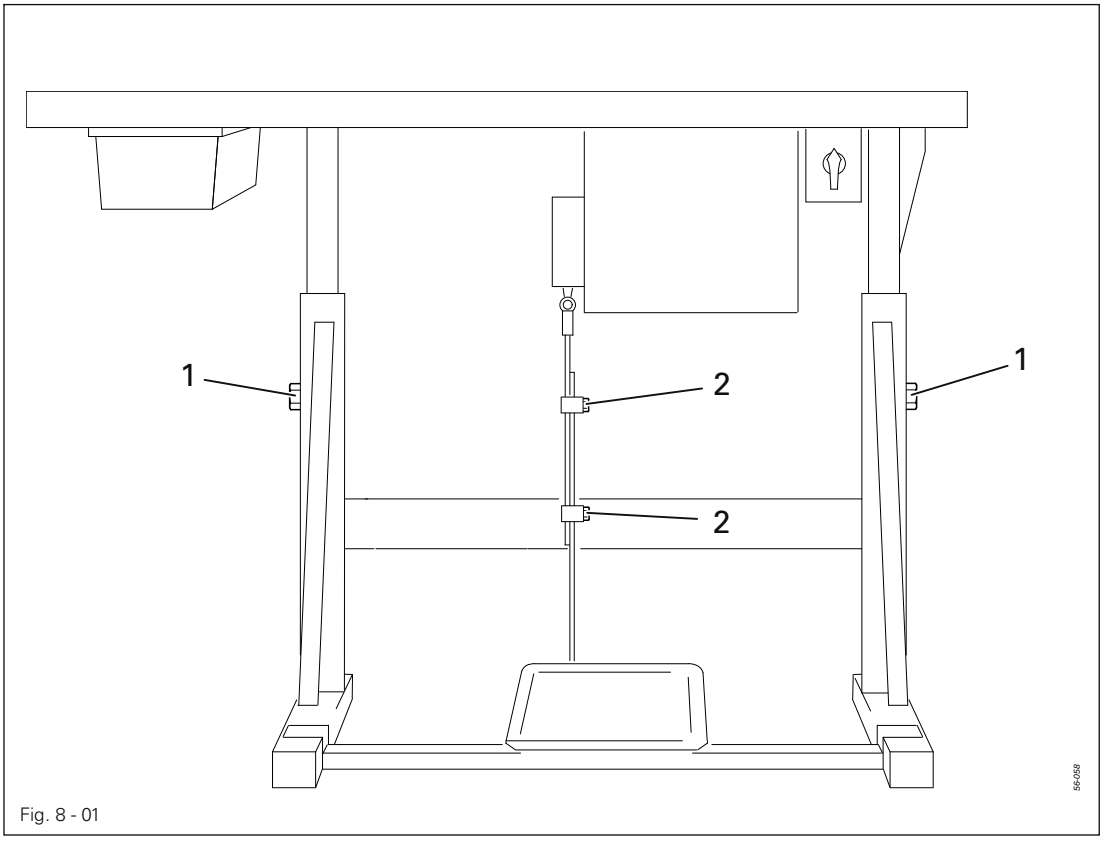

Fig. 8 - 01

- Loosen screws **1** and **2** and set the table height as required.
- Firmly tighten screw **1.**
- Set the required pedal position and tighten screws **2.**

8.01.02 Installation variants

The **PFAFF 3119** can be installed in two different ways.

- Version **A**: Sewing crosswise to the table edge
- Version **B**: Sewing parallel to the table edge

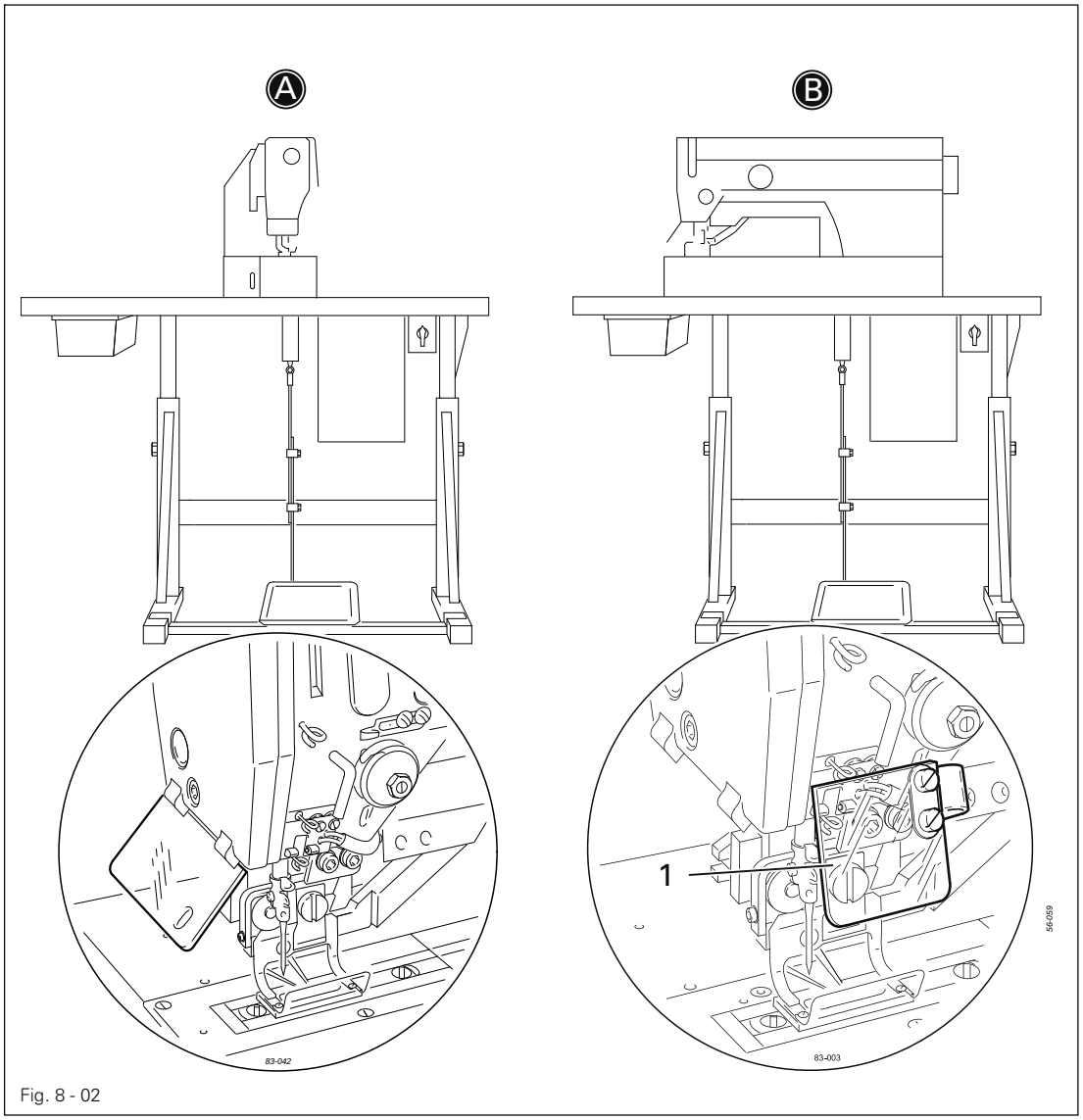

Fig. 8 - 02

When the machine is installed for "Sewing parallel to the table edge", the eye shield **1,** part no. **91-160 383-90,** must be fitted.

The safety covers must be fitted before the machine is set into operation and must not be removed, see also Chapter **1.06 Danger warnings!**

8.01.03 Table top drilling template (installed parallel to the table edge)

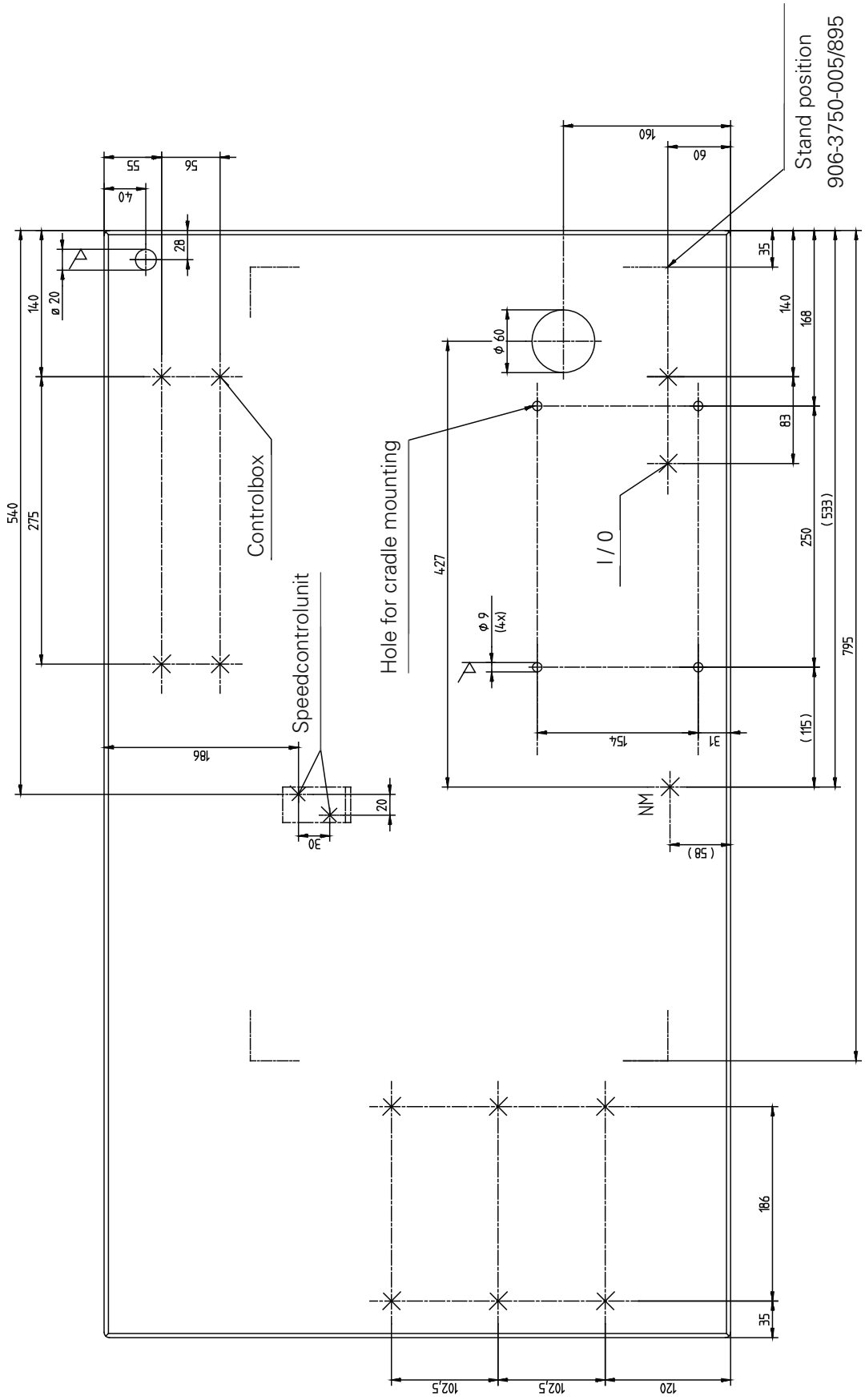

8.01.04 Table top drilling template (installed crosswise to the table edge)

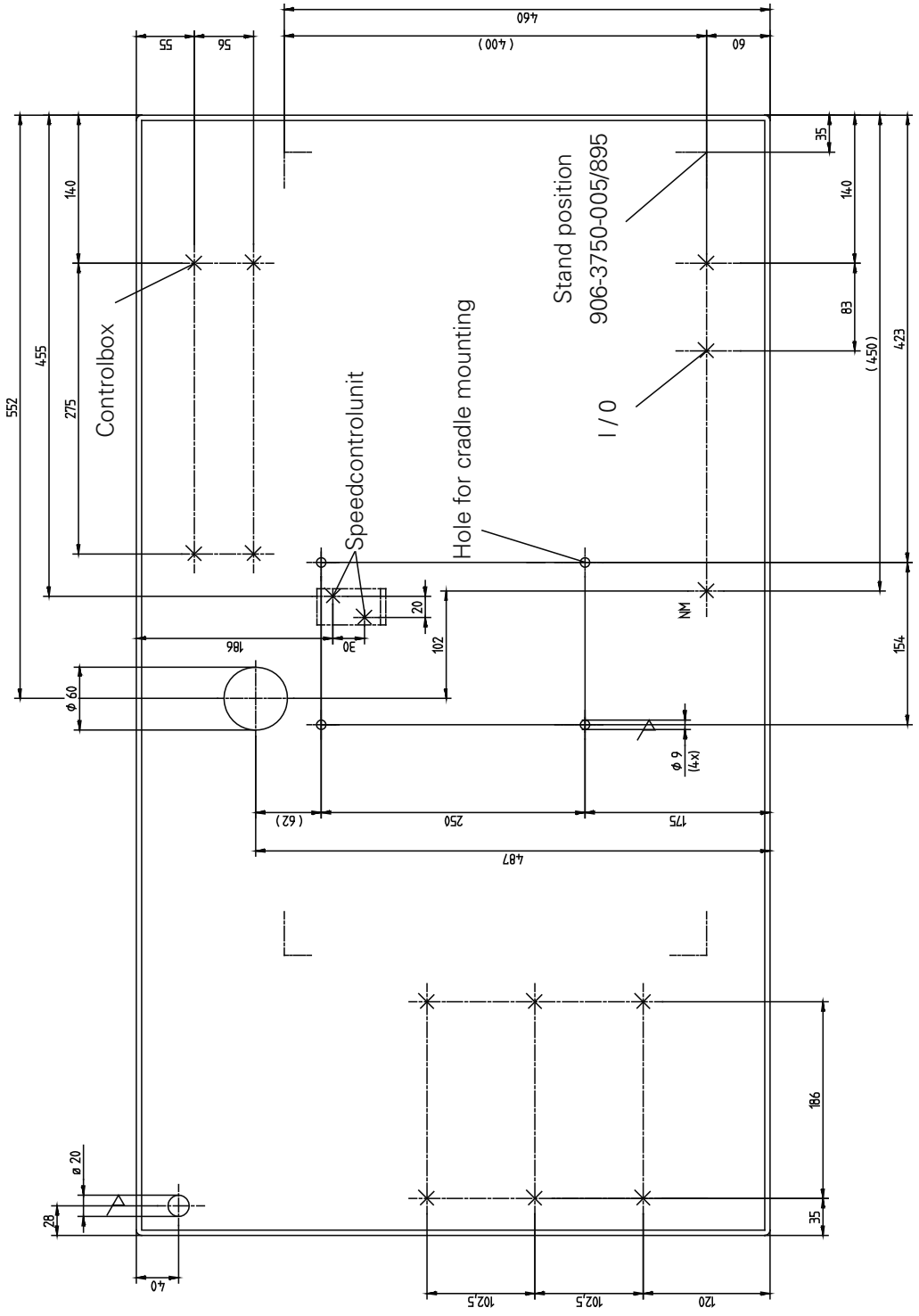

8.01.05 Connecting the plug connections and earth cables

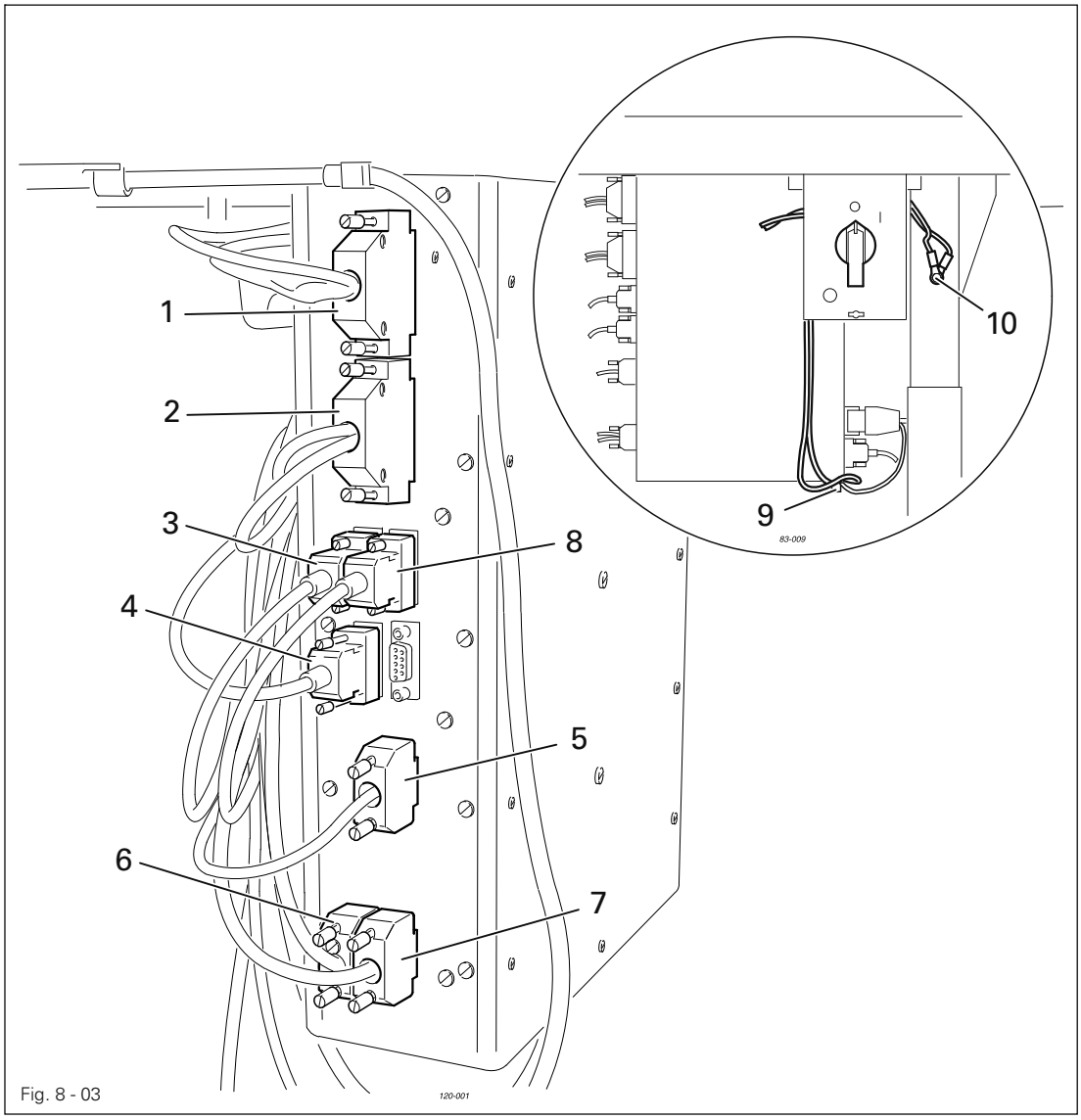

Fig. 8 - 03

- Connect all plugs **1** - **8** as labelled in the control box.
- Screw earth cable from the machine and the motor to earth point **9.**
- Connect earth point **9** and **10** with an earth cable.
- Screw earth cable of the main switch to earth point **10.**

8.01.06 Fitting the reel stand

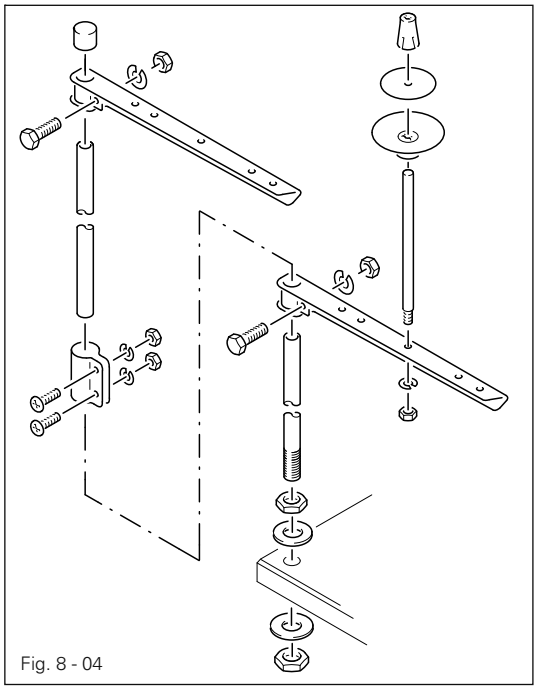

Fig. 8 - 04

- Fit the reel stand as shown in Fig. 8 - 04.
- Afterwards insert the stand in the hole in the table top and secure it with nuts provided.

8.02 Commissioning

- Clean the machine thoroughly and then check the oil level (see Chapter **12 Care and Maintenance**).
- Check the machine, in particular the electric leads and pneumatic connection tubes, for any damage.
- Have mechanics ensure that the machine's motor can be operated with the available electricity supply.
- Connect the machine to the compressed air system. The manometer should show a pressure of **6 bar**.
- If necessary, set this value (see Chapter **12.05 Checking / adjusting the air pressure**).

8.03 Switching the machine on / off

- Switch the machine on or off (see Chapter **7.01 Main switch**).
- Setting up the machine control unit, see Chapter **8.04 Setting up the machine control unit**.

8.04 Setting up the machine control unit

After the initial machine start up, first of all the allocation of the machine control unit to the machine sub-class being used must be checked and adjusted if necessary.

8.04.01 Establishing the sub-class

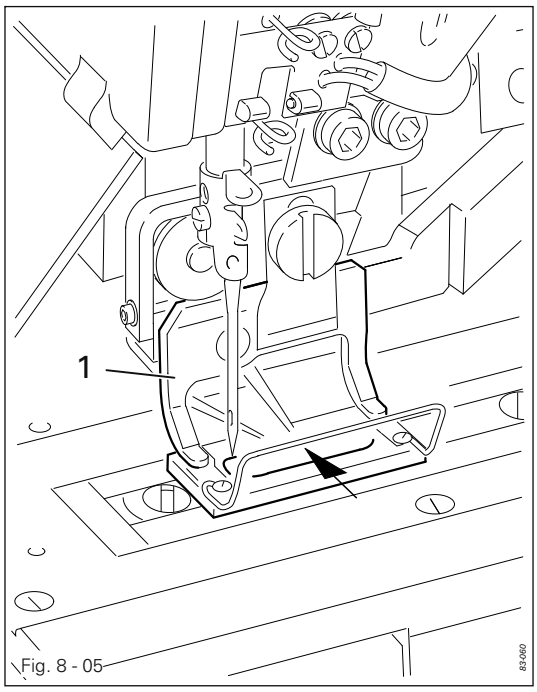

Fig. 8 - 05

- Measure the size of the cut-out in the work clamp **1.**
- With the cut-out size and the aid of the following table, the sub-class and the parameter value "**202**" can be established.
- How to set parameter "**202**" is described in Chapter **8.04 Setting parameter "202".**

Work clamp cut-out	Sub-class	Value for parameter "202"
30,0 x 5,6	3119-1/51, -1/52	1
40,0 x 5,6	3119-2/51	2
44,0 x 6,0	3119-2/62	2
40,0 x 6,7	3119-2/53	3
44,0 x 7,0	3119-2/63	3
46,0 x 6,7	3119-3/51	4
55,0 x 7,0	3119-4/51	5
77,0 x 7,0	3119-5/51	6

8.04.02 Setting parameter "202"

- Switch on the machine.

TE

- Select the input mode (LED in the key is on).

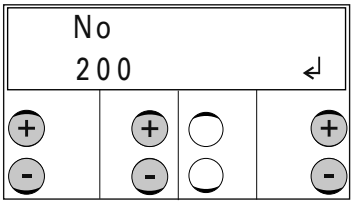

- Using the corresponding **plus/minus key** select the function group, e.g. "**200**".
- Confirm input with the "Enter" function by pressing the right **plus key**.
- Enter the code, see Chapter **11.03 Entering/altering the access code**.

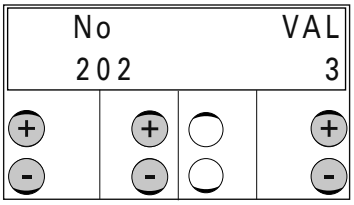

- Using the corresponding **plus/minus key** select e.g. parameter "**202**".
- Using the corresponding **plus/minus key** select the value for the established sub-class, e.g. "**3**" for sub-class **3119-2/53,** see Chapter **8.04.01 Establishing the sub-class**.

TE

- Conclude parameter input by switching to operational mode Sewing (LED in the key goes off).

9 Setting up

All instructions and regulations in this instruction manual must be observed.

Special attention must be given to all safety regulations!

All setting-up work must only be done by personnel with the necessary training. For all setting-up work the machine must be isolated from its power supply by turning off the on/off switch or removing the machine plug from the electric power socket!

9.01 Inserting the needle

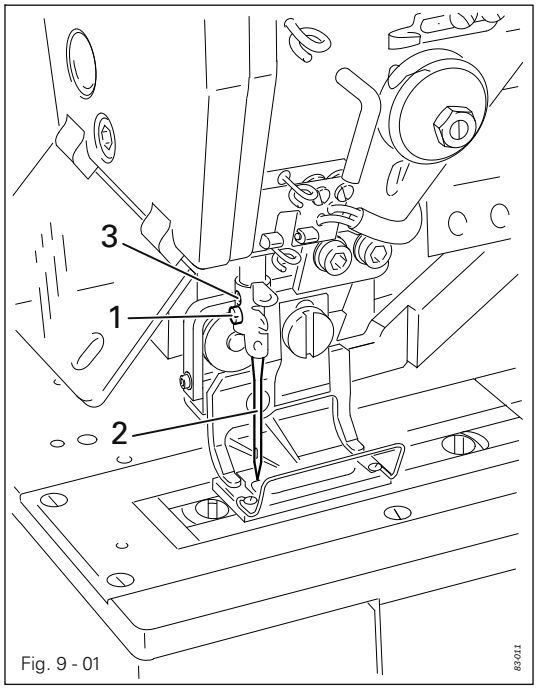

Fig. 9 - 01

Switch off the machine!

Mechanically lock the knife using the knife engagement prevention lever! Danger of injury from the needle and the knife!

Only use needles from the system intended for the machine, see Chapter **3 Specifications**.

- Loosen screw **1.**
- Insert needle **2** as far as possible and with the long needle groove pointing in the direction of the knife.
- Tighten screw **1.**

Through hole **3** it is possible to check, whether needle **2** has been inserted as far as possible.

By inserting suitable tools in hole **3,** broken needles can be driven out.

9.02 Winding the bobbin thread / adjusting the preliminary thread tension

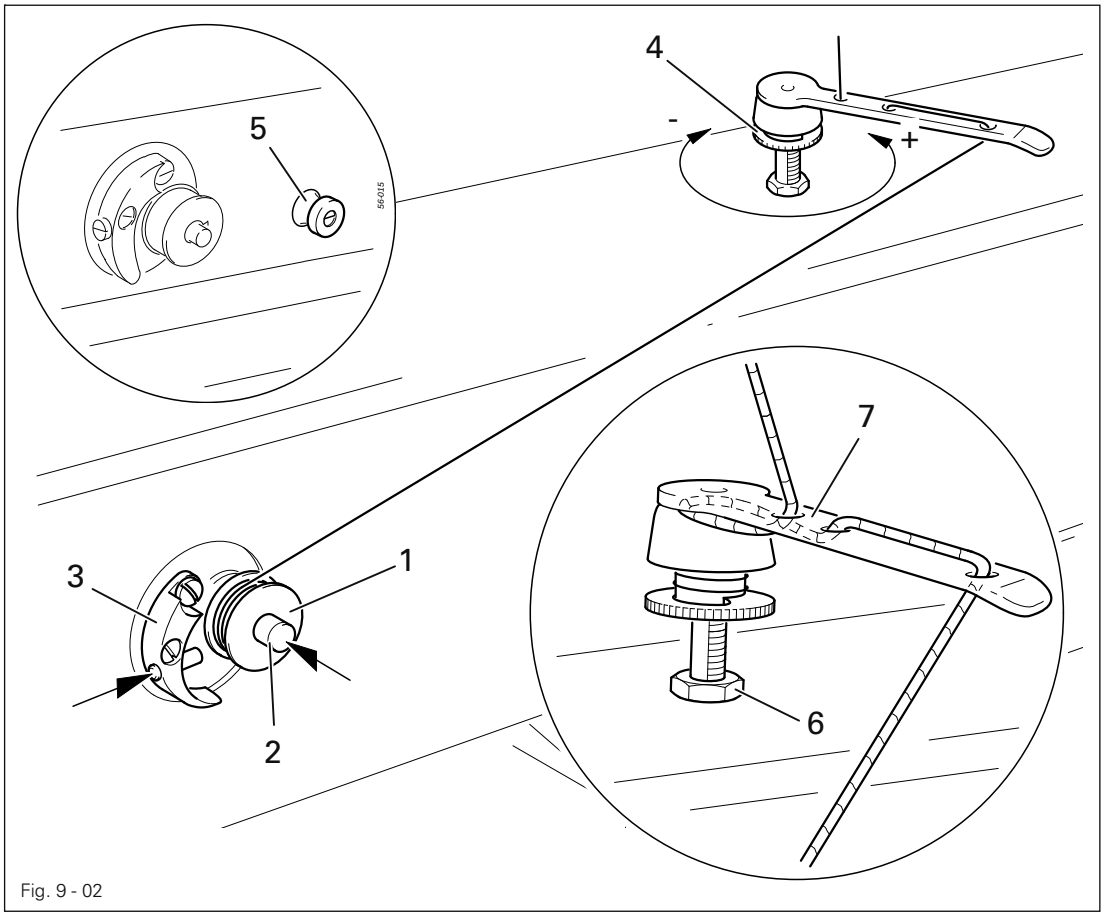

Fig. 9 - 02

- Place an empty bobbin **1** on winder spindle **2.**
- Thread up as shown in Fig. **9 - 02** and wind the thread a few times clockwise around bobbin **1.**
- Engage the bobbin winder by pressing spindle **2** and lever **3** simultaneously.

The bobbin is wound during sewing.

- The tension of the thread wound onto bobbin **1** is set on milled screw **4.**
- The bobbin winder will stop when sufficient thread is wound onto bobbin **1.**
- After winding the needle thread can be cut with thread knife **5.**

If the thread is wound on unevenly:

- Loosen nut **6.**
- Turn thread guide **7** as required.
- Tighten nut **6** again.

Winding the bobbin outside the sewing cycle.

With the Stop key it is possible to switch off the drive of the feeding mechanism and the knife, so that bobbin winding only takes place with pedal operation. To wind the bobbin, the needle thread must be removed..

9.03 Threading the bobbin case / adjusting the bobbin thread tension

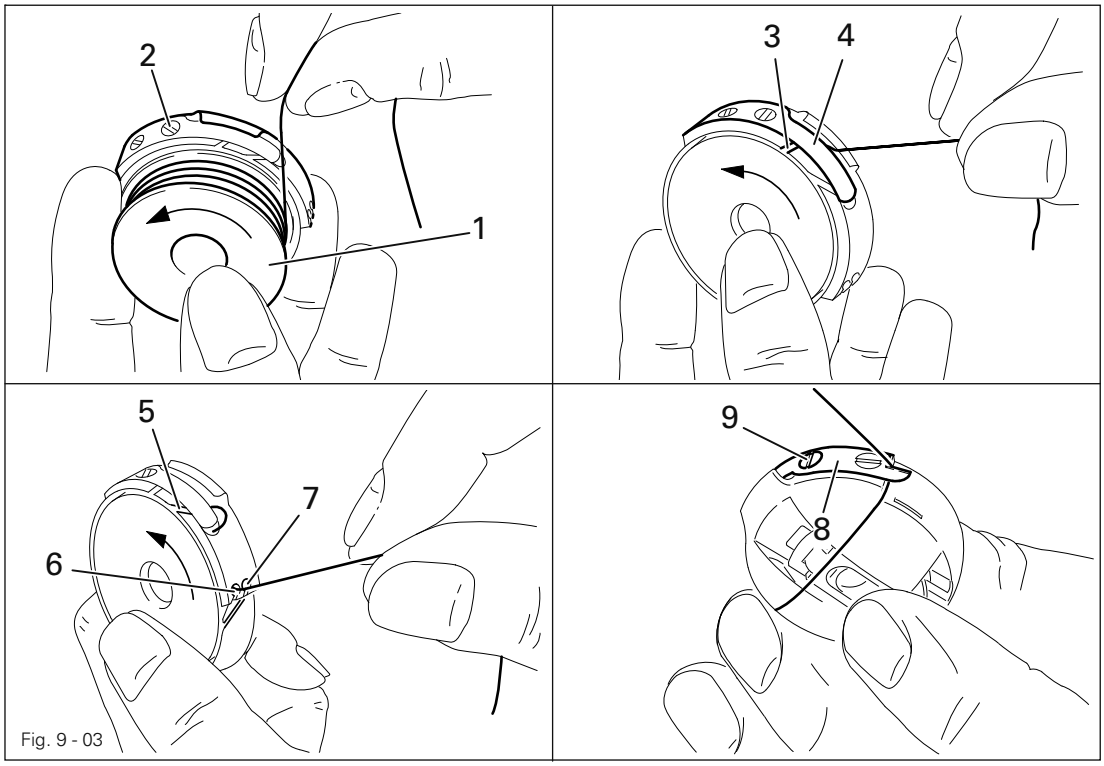

Fig. 9 - 03

- Insert the bobbin **1** in the bobbin case.
- First guide the thread into slot **3** and under spring **4.**
- Then guide the thread into slot **5.**

For **purl buttonholes**:

- Push thread through opening **6.**

For **flat buttonholes**:

- Push thread through opening **7.**

- Trim thread on thread knife **8.**
- Adjust the thread tension by turning screw **9.**
- To do so use the tools supplied.

When sewing flat buttonholes, the tension of the bobbin thread must be so high, that the bobbin thread is interlooped on the bottom side of the material.

9.04 Changing the bobbin

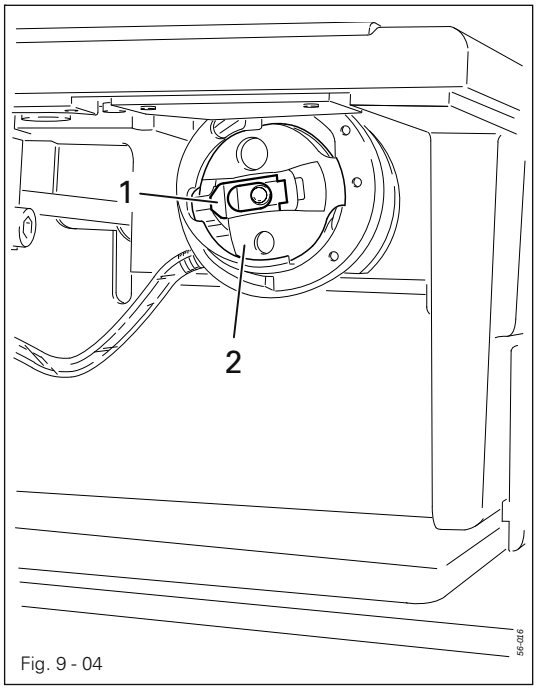

Fig. 9 - 04



Switch off the machine!
Lock the knife mechanically with the knife engagement prevention device! Danger of injury from the needle and the knife!

- Open the cover of the hook compartment.

Removing the bobbin:

- Raise latch 1 and remove bobbin case 2 together with the bobbin.

Inserting the bobbin:

- Raise latch 1 and insert bobbin case 2 together with the bobbin into the hook
- Release latch 1 and push the bobbin case into the hook until you feel it snap into place.
- Close the cover of the hook compartment.

9.05 Threading the needle thread

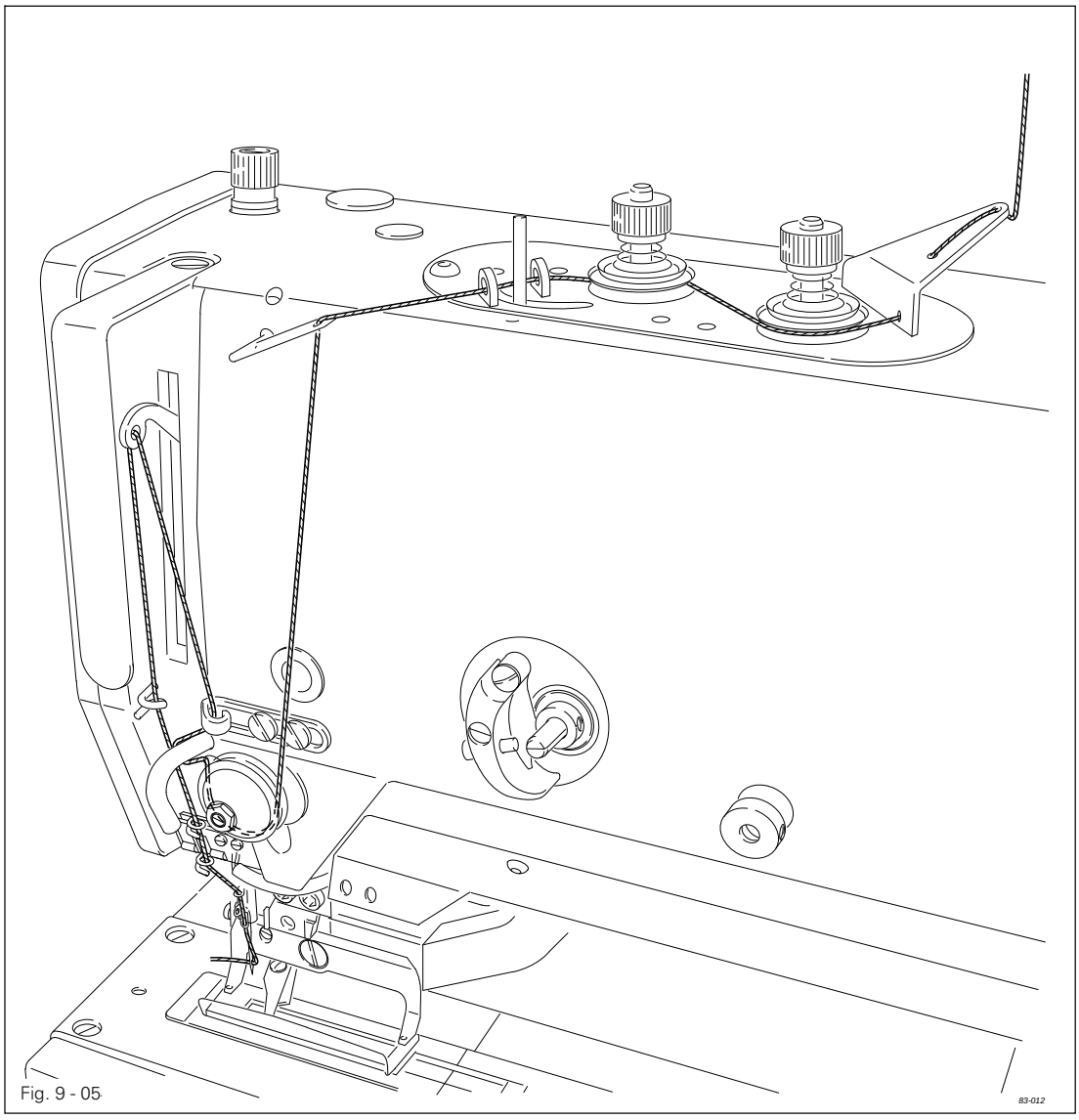

Fig. 9 - 05



Switch off the machine!
Lock the knife mechanically with the knife engagement prevention device! Danger of injury from the needle and the knife!

- Thread the needle thread as shown in Fig. **9-05.**

9.06 Selecting the operating mode

- Switch on the machine.

TE

- Select the input mode (LED in the key is on).

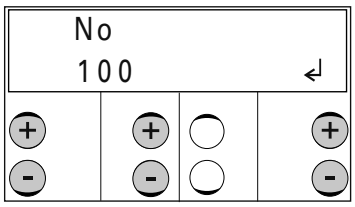

- Select the function group "**100**" with the appropriate **plus / minus key**.
- Confirm input with the "Enter" function by pressing the right **plus key**..

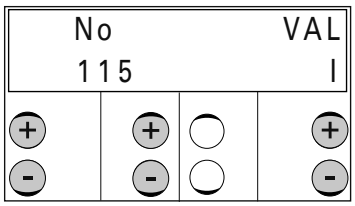

- Select the parameter "**115**" (operating mode) with the corresponding **plus/minus key**.
- Select the desired operating mode (I, II) with the corresponding **plus/minus key**:

  I = buttonhole mode
  II = bartack mode

TE

- Conclude parameter input by switching to operational mode Sewing (LED in the key goes off).

The functions of the keys on the control panel are dependent, among other things, on the operating mode selected, see Chapter **7.05 Control panel.**

9.07 Selecting the type of buttonhole / bartack

Depending on the selected operating mode, see Chapter **9.06 Selecting the operating mode**, the type of buttonhole or bartack is selected as described below.

- Switch on the machine.

TE

- Select the input mode (LED in the key is on).

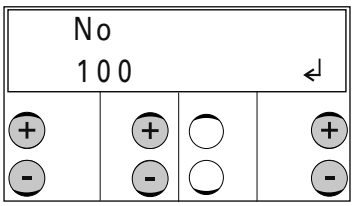

- Select the function group "**100**" with the appropriate **plus / minus key**.
- Confirm input with the "Enter" function by pressing the right **plus key**.

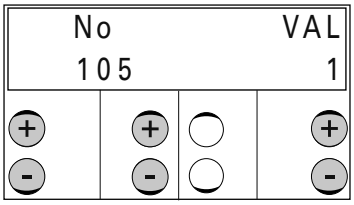

- Select parameter "**105**" (type of buttonhole) with the appropriate **plus / minus key**.
- Select the desired buttonhole type (**1-5)** or bartack type (**1-4)** with the corresponding **plus/minus key**:

Types of buttonhole

1 - seam raised, bartack flat
2 - completely flat
3 - completely raised
4 - first sewing cycle completely flat, second cycle completely raised (double sewing cycle)
5 - first sewing cycle completely flat, second cycle seam raised, bartack flat (double sewing cycle)

Types of bartack

1 - 1st seam raised, 2nd seam flat
2 - 1st and 2nd seam flat
3 - 1st and 2nd seam raised
4 - 1st seam flat, 2nd seam raised

TE

- Conclude parameter input by switching to operational mode Sewing (LED in the key goes off).

9.08 Adjusting the needle thread tension

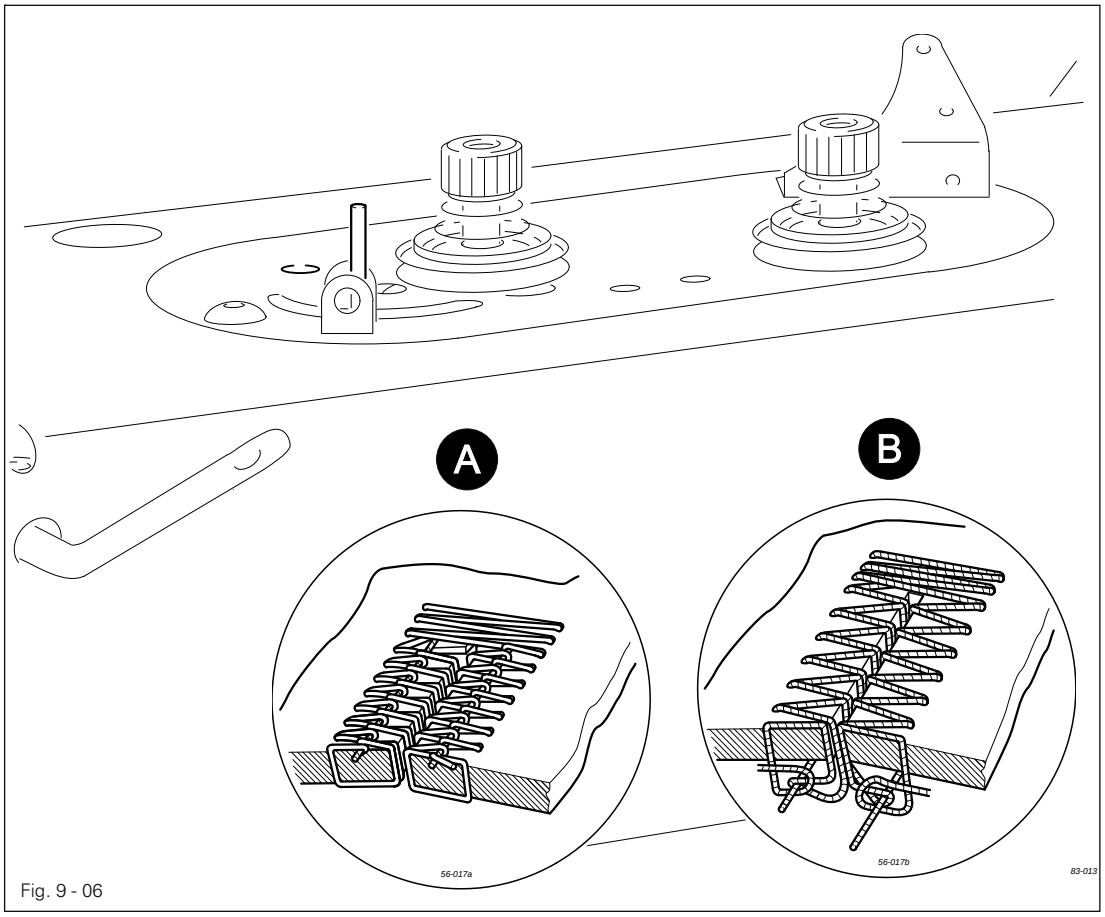

Fig. 9 - 06

- Shread and insert the bobbin case according to the required type of buttonhole, see Chapter **9.03 Inserting the bobbin case / adjusting the bobbin thread tension**.
- Switch on the machine and select the required type of buttonhole (purl or flat buttonholes) on the control panel, see Chapter **9.07 Selecting the type of buttonhole / bartack**

For **purl buttonholes** (A):

- Open tension unit **1** to the full extent and adjust tension unit **2** so that the stitches are interlooped in the centre of the material.
- Adjust tension unit **1** so that the interloops of the purl seam stitches are pulled upwards.

For **flat buttonholes** (B):

- Adjust tension unit **2** (less tension) so that the interloops of the stitches are pulled to the bottom side of the material.

Carry out the adjustment with different coloured needle and bobbin threads.

9.09 Adjusting the work clamp pressure

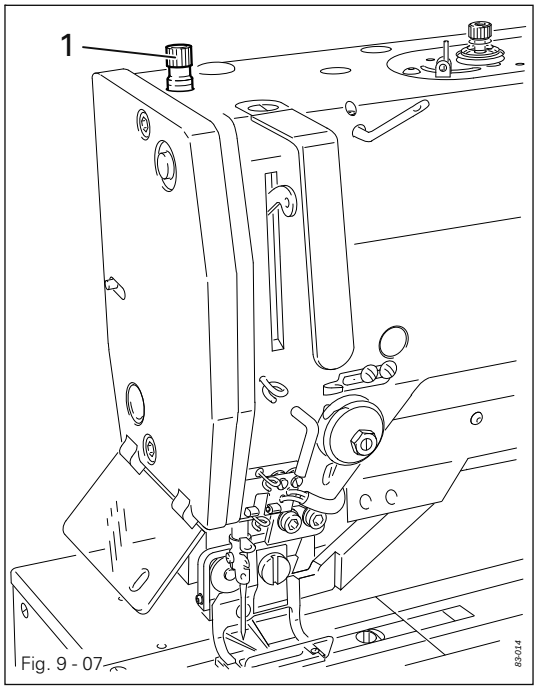

Fig. 9 - 07

- Adjust the work clamp pressure by turning adjustment screw **1.**

The sewing pressure depends on the material of the workpiece and must be adapted to this. It is set correctly when the workpiece is fed reliably and shows no feed marks.

9.10 Inserting and removing the SD-memory card

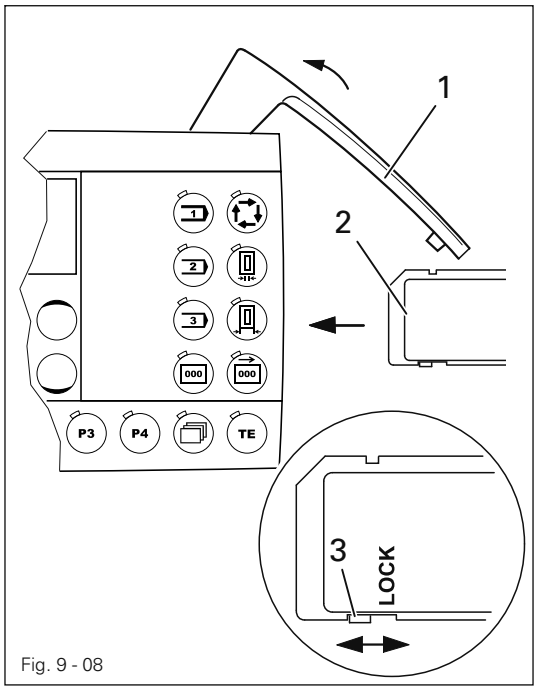

Fig. 9 - 08

Inserting the SD-memory card

- Open cover **1.**
- Insert SD-memory card **2** into the card slot with the label at the front.
- Close cover **1** again.

Removing the SD-memory card

- Open cover **1.**
- Press the edge of the SD-memory card **2** lightly – the SD-card is ejected.
- Close cover **1** again.

By moving slide **3** it is possible to activate (position "LOCK") or deactivate the write protection function of the SD-memory card. To store, process or delete data on the SD-memory card, the write protection function must be deactivated.

9.11 Position of the needle to the workpiece

- Switch on the machine and sew one buttonhole.



- Insert the workpiece and lower the work clamp with this key.



- Select the input mode (LED in the key is on).

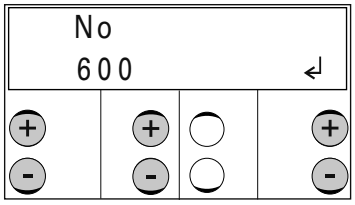

- Select the function group "**600**" with the corresponding **plus/minus key**.
- Confirm input with the "Enter" function by pressing the right **plus key**.
- Enter the code, see Chapter **11.03 Entering/altering the access code**.

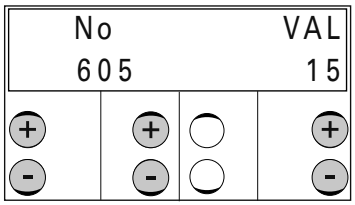

- Call up the parameter "**605**" (position of the needle to the workpiece) using the corresponding **plus/minus key**.
- Disengage the needle thread cutter by hand.
- By turning the balance wheel in the sewing direction set the needle point at a level with the workpiece surface (the preset value **15** is altered).



- Conclude parameter input by switching to operational mode Sewing (LED in the key goes off).

9.12 Activating the sequence mode

To activate the sequence mode, at least one sequence must have been created beforehand, see Chapter **11.06.01 Creating sequences**.

- Switch on the machine.

TE

- Select the input mode (LED in the key is on).

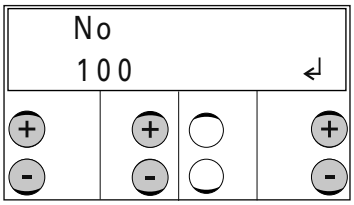

- Select the function group "**100**" with the appropriate **plus / minus key**.
- Confirm input with the "Enter" function by pressing the right **plus key**.

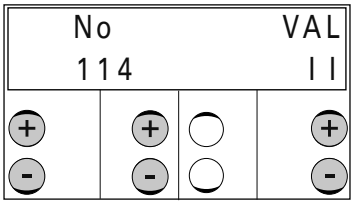

- Select the parameter "**114**" (sequence mode) with the corresponding **plus/minus key**.
- To switch on the sequence mode, enter value "II" with the corresponding **plus/minus key**:

TE

- Conclude parameter input by switching to operational mode Sewing (LED in the key goes off).

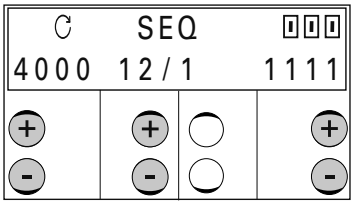

In the sequence mode, the number of programs belonging to the sequence are shown on the display together with the current program. It is possible to switch from one program to another manually with the corresponding **plus/minus key**.

10 Sewing

The machine must be installed and connected in accordance with Chapter 8 Installation and Commissioning.

- Set-up the machine, see Chapter 9 Setting-up.
- Switch on the machine, see Chapter 7.01 On/off switch.
  The machine is automatically in the operational mode Sewing.
- Start the sewing cycle with the pedal, see Chapter 7.03 Pedal.

The control panel display and therefore the operation of the machine depend among other things on the subclass and the selected operating mode, or the sequence mode being activated.

10.01 Sewing in the buttonhole mode

10.01.01 Control panel with speed or buttonhole model display

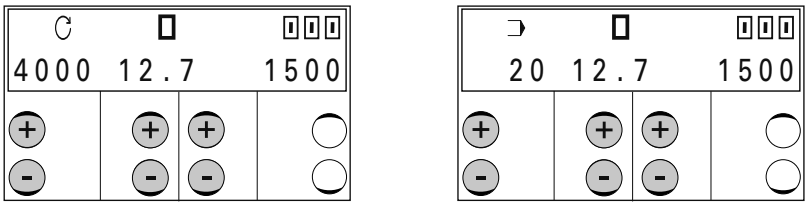

What is shown on the display screen:

4000: Maximum speed

The value can be altered directly with the corresponding plus/minus key.

20: Buttonhole model

The buttonhole model can be altered with the corresponding plus/minus key. If variable programs are selected (see cut length) the number of the buttonhole model allocated to the variable program appears. No value is shown when special programs are selected.

12.7: Cut length

This value can be changed directly with the corresponding plus/minus key. The buttonhole is selected by selecting the cut length (from 6.4 mm to 64.6 mm, depending on the sub-class) in conjunction with the selected stitch density

P1 to P4

Quick selection keys

After tacting through the cutting lengths, the previously created variable and special programs appear on the display. Only assigned program numbers are displayed, variable programs from 1 to 39, special programs from 40 to 49. When selecting these programs, the keys P1 to P4 can be used as quick selection keys. After selecting a variable or special program, each of the 4 quick selection keys can be assigned to a program by pressing the key longer (approx. 2 seconds).



In addition, previously selected cut lengths, variable or special programs can be selected with the corresponding plus/minus key (also see Chapter **11.07 Selecting programs**).
Selected programs are marked on the display with an " * ".

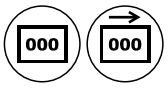

1500: **Piece counter / reverse counter**
Depending on the activated function (**piece counter** or **reverse counter**) the number of buttonholes already sewn or the number still to be sewn is displayed.

10.01.02 Selecting the buttonhole

It is possible to select **31** different buttonhole models. Fixed programs are allocated to each model, depending on the subclass. The desired fixed program is selected by choosing the cutting length and one of the three stitch densities.

Buttonhole design:

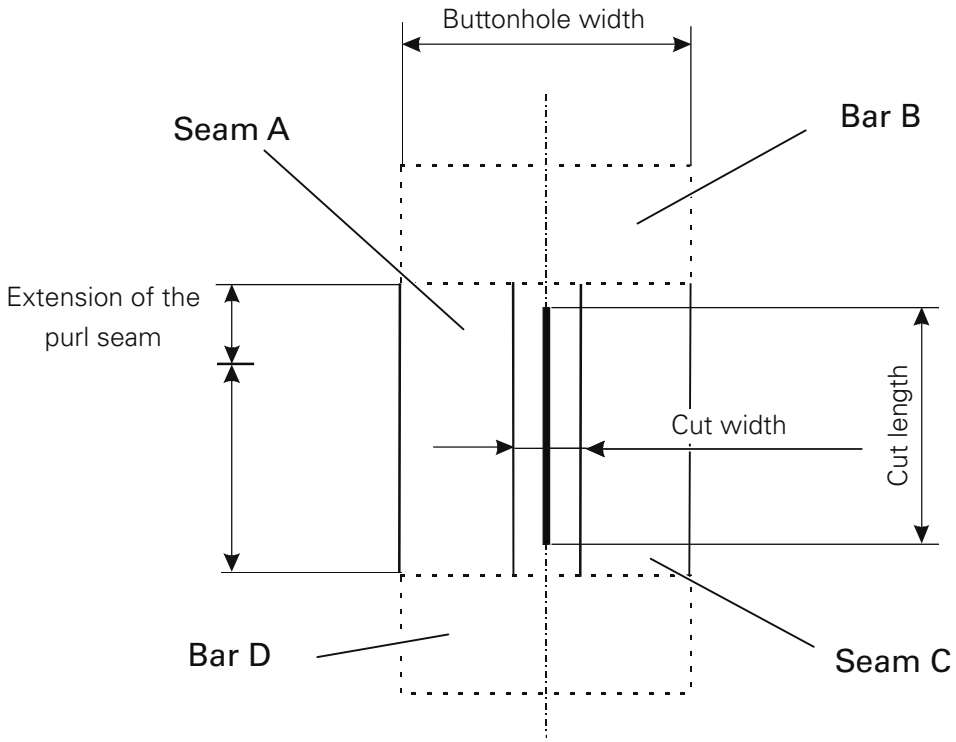

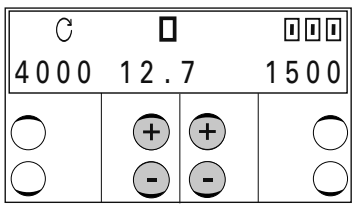

- Select the cut length (depends on the knife installed).



- Select the stitch density.



- If necessary adjust the buttonhole width, see Chapter **10.01.04 Altering the buttonhole width and seam correction**



- If necessary adjust the cut width (left)/seam extension (right), see Chapter **10.01.05 Altering the cutting width and cutting length correction**

10.01.03 Entering the knife length and cut overlap



To avoid premature wear of the cutting equipment we recommend the use of a knife matching the buttonhole length.

- Switch on the machine.



- Select the input mode (LED in the key is on).

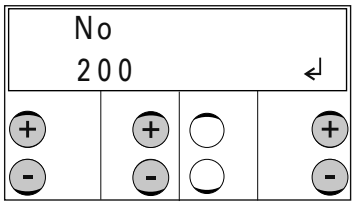

- Select function group "**200**" with the corresponding **plus/minus key**.
- Confirm input with the "Enter" function by pressing the right **plus key**.
- Enter the code, see Chapter **11.03 Entering/altering the access code**.

Entering the knife length

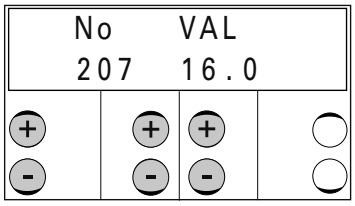

- Select parameter "**207**" with the corresponding **plus/minus key**.
- Enter the value for the knife length of the installed knife, e.g. **16** mm, with the corresponding **plus/minus key**.

Enter cut overlap

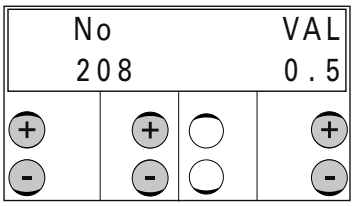

- Select Parameter "**208**" with the corresponding **plus/minus key.**
- With the corresponding **plus/minus key** select the cut overlap, e.g. **0.5 mm**.
- Conclude parameter input by switching to operational mode Sewing (LED in the key goes off).

10.01.04 Altering the buttonhole width and seam correction

The buttonhole width and seam correction are only valid in the buttonhole mode and must always be set up from the centre of the buttonhole.

- Switch on the machine.
- Select the function for entering the buttonhole width and seam correction (LED in the key is on).

Entering the button width

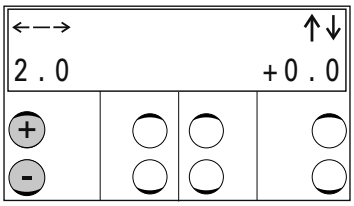

- Enter the desired buttonhole width with the left **plus/minus key**.

Entering the seam correction

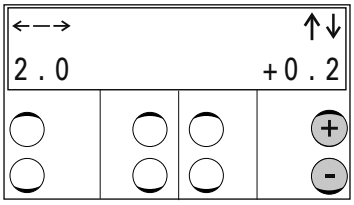

- Enter the desired seam correction with the right **plus/minus key**.

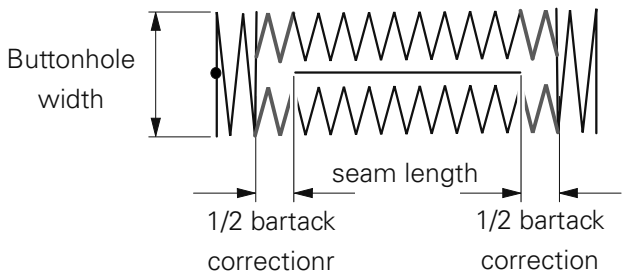

A seam correction value under the minimum cut distance to the bartack (see parameter "**210**") or over the value for the appropriate subclass, is not valid.

10.01.05 Altering the cutting width and cutting length correction

The cutting width and cutting length are only valid in the buttonhole mode and must always be set up from the centre of the buttonhole.

- Switch on the machine
- Select the input of cutting width and cutting length correction (LED in the key is on).

Entering the cutting width correction

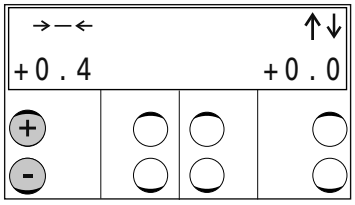

- Enter the desired distance of the cut from the buttonhole seam with the left **plus/minus key**.

Entering the cutting length correction

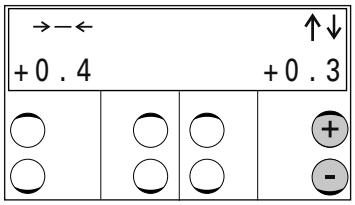

- Enter the desired cutting length correction with the right **plus/minus key**. The buttonhole length is adapted automatically to the corresponding length.

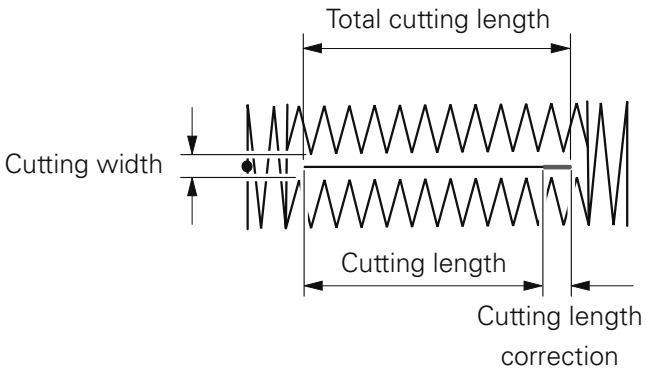

A cutting length correction value under the minimum value of the installed knife or over the maximum value for the appropriate subclass, is not valid..

10.02 Sewing in the bartack mode

10.01.01 Control panel with speed or bartack type display

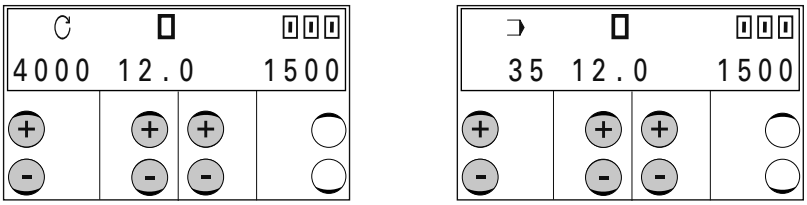

Screen displays:

4000: Maximum speed

The value can be altered directly with the corresponding **plus/minus key**.

35: Type of bartack

The type of bartack can be altered with the corresponding **plus/minus key** (at present only one type of bartack can be selected). If vario programs are selected (see bartack length), the number of the bartack type allocated to the vario program appears. If special programs are selected, no value is displayed.

12.0: Bartack length

The value can be altered directly with the corresponding **plus/minus key**. The bartack is selected by choosing the bartack length (depending on the subclass from **10.0** mm to **70.0** mm) in conjunction with the selected program key.

Quick selection keys

After tacting through the cutting lengths, the previously created variable and special programs appear on the display. Only assigned program numbers are displayed, variable programs from 1 to 39, special programs from 40 to 49. When selecting these programs, the keys **P1** to **P4** can be used as **quick selection keys**. After selecting a variable or special program, each of the **4 quick selection keys** can be assigned to a program by pressing the key longer (approx. 2 seconds).

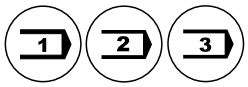

To assign a **program key**, after selecting a variable or special program , press one of the **3** program keys longer (approx. **2** seconds).

It is also possible to call up previously selected bartack lengths, vario or special programs with the corresponding **plus/minus key** (also see Chapter **11.07 Selecting programs**). Selected programs are marked on the display with an " * ".

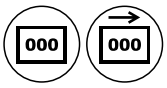

1500: **Piece counter / reverse counter**
Depending on the activated function (**piece counter** or **reverse counter**) the number of buttonholes already sewn or the number still to be sewn is displayed.

10.02.02 Selecting the bartack

The desired bartack is selected by entering the bartack length, bartack width and stitch length.

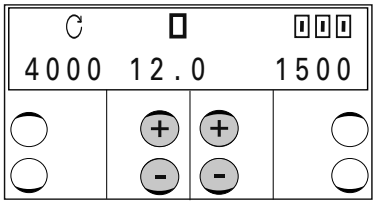

- Select the bartack length with the corresponding **plus/minus keys**.

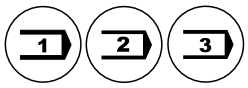

- Select the stitch density
  Alterations in bartack width and stitch length for the forwards and reverse seam are stored and can be called up again by pressing the corresponding program key.



- If necessary, adapt the forward seam.

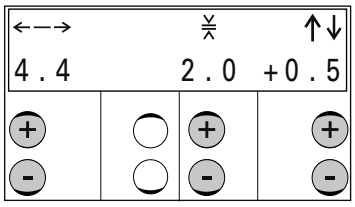

- Enter the bartack width (left plus/minus key), stitch length (centre **plus/minus key**) and bartack extension (right **plus/minus key**).



- If necessary, adapt the reverse seam.

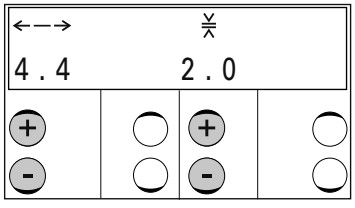

- Adapt the bartack width (left) and stitch length (right) of the rear seam with the corresponding **plus/minus keys**.

10.03 Error messages

If a malfunction occurs, an error code appears on the display together with short instructions. In addition the diode in the memory card slot lights up red (see arrow). An error message may be caused by incorrect settings, defective elements or seam programs, as well as by overload conditions.
For a description of the error codes see Chapter "13.49.01 Description of the error codes".

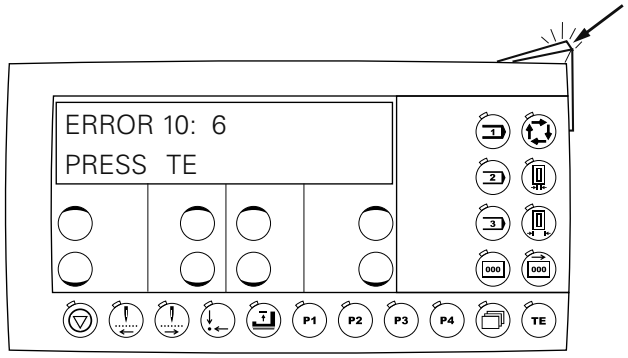

- Eliminate the error.



- Acknowledge the elimination of the error by pressing the TE key.
- The diode in the memory card slot (see arrow) turns yellow again.

11 Input

In the operational mode Input the values of the machine parameters can be altered, e.g. for setting up the machine or for creating/modifying seam programs.

11.01 Summary of the function groups and parameters

TE Operational mode Input (LED in the key is on)

- 100 Operating staff
  - 101 Knife suppression
    - I off
    - II on
  - 102 Stop – needle thread fault
    - I off
    - II on
  - 104 Display software version
  - 105 Type of buttonhole/type of bartack (see Chapter 9.07))
  - 108 Number of securing seam cycles
  - 109 Distance of the securing seam to the outer edge of the buttonhole
  - 110 Selecting programs
    - I Off (select programs)
    - II On
  - 111 Programming sequence 1
  - 112 Programming sequence 2
  - 113 Programming sequence 3
  - 114 Sequence mode
    - I off
    - II ein
  - 115 Operating mode
    - I buttonhole
    - II bartack
  - 116 Softwareversion Motorregelung
  - 117 Key tone
    - I off
    - II on
- 200 Specialists
  - 201 Deleting variable programs
  - 202 Subclass
    - 1 -1/51 und -1/52
    - 2 -2/51 und -2/62
    - 3 -2/53 und -2/63
    - 4 -3/51
    - 5 -4/51
    - 6 -5/51
  - 205 Needle thread monitor
    - I off
    - II on
  - 206 Copying programs
  - 207 Entering the knife length
  - 208 Enter cut overlap
  - 209 Double cycle with offset stitches
    - 1 Full number of stitches per cycle
    - 2 Half number of stitches per cycle
  - 210 Min. distance to bartack (distance from front edge of knife to centre of needle)
  - 211 Number of finishing stitches
- 300 Programming (see Chapter **11.05.02, 11.05.05, 11.05.06 and 13.48.02**)
- 400 Times (see Chapter **13.48.02**)
- 500 Counters and speeds (see Chapter **13.48.02**)
- 600 Service (see Chapter **13.48.02**)
- 700 Sewing motor (see Chapter **13.48.02**)
- 800 Access rights (see Chapter **11.03. and 13.48.02**)

11.02 Selecting the function group and altering the parameters

- Switch on the machine.
  After the machine is switched on, the operational mode Sewing is activated automatically.

TE

- Select the input mode (LED in the key is on).

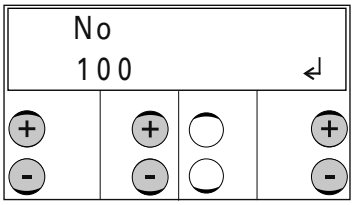

- Select the desired function group with the corresponding **plus/minus key**.
  On delivery only the function group "**100**" has free access, the other function groups are protected from unauthorised access by a code.
- Confirm the selection of the desired function group with the "Enter" function by pressing the right **plus key**

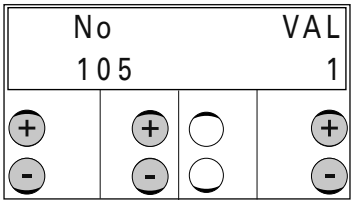

- Select the desired parameters and alter the desired value using the corresponding **plus/minus key**.
- The value is taken over when the next parameter is called up.

or

TE

- When Operation mode Sewing is selected the altered value is saved and the machine changes to the operational mode sewing (LED in the key goes off).

11.03 Entering / altering the access code

- Switch on the machine

TE

- Select the input mode (LED in the key is on).

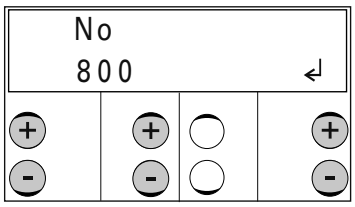

- Select the function group "800" with the appropriate plus / minus key.
- Confirm input with the "Enter" function by pressing the right plus key.

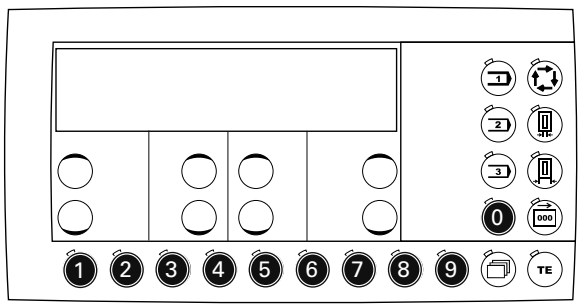

P4

- Enter code.
  The numbers are entered with the corresponding function keys as described. The factory code setting is "3119".

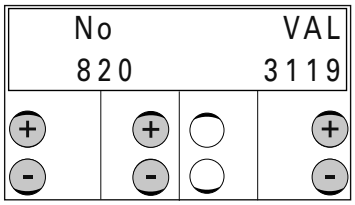

- To change the access code, select parameter "820" (enter access code) with the appropriate plus / minus key.
- Enter a new code.

TE

- When Operation mode Sewing is selected the altered value is saved and the machine changes to the operational mode sewing (LED in the key goes off).

11.04 Allocating access rights

- Switch on the machine

TE

- Select the input mode (LED in the key is on).

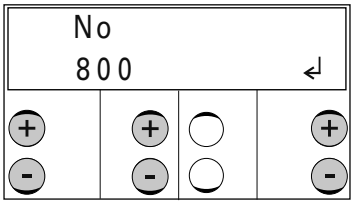

- Select the function group "800" with the appropriate plus / minus key.
- Confirm input with the "Enter" function by pressing the right plus key.
- Enter the code, see Chapter 11.03 Entering/altering the access code.

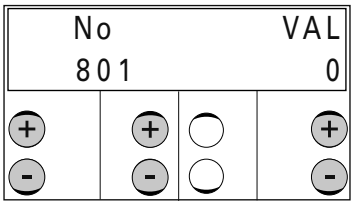

- Select the required parameter "801" to "819" with the appropriate plus / minus key, see Chapter 13.48 Parameter settings.
- Release or lock the selected parameter with the appropriate plus / minus key.
  0: Parameter function is freely accessible.
  1: Parameter function only available after access code has been entered.

If all parameters (801 to 819) are set at "0", no further enquiry for the access code ensues.

TE

- When Operation mode Sewing is selected the altered value is saved and the machine changes to the operational mode sewing (LED in the key goes off).

11.05 Variable programs

39 variable programs can be stored in the machine. A variable program can be selected with the program number 1 to 39.
Variable programs can be created by copying and altering the desired parameters of an existing program or by entering completely new parameters.

11.05.01 Copying programs

If there is a program in the machine which corresponds approximately to the required program, this can be copied and then altered. This method is particularly suitable if e.g. only one parameter has to be altered, to achieve the desired result.

- Switch on the machine.

- With the corresponding **plus/minus key** select the fixed or vario program to be copied using the cutting length or bartack length, or the program number (e.g. B2 or T2).

TE

- Select the input mode (LED in the key is on).

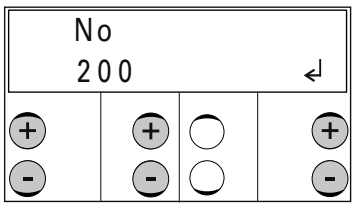

- Select function group "200" using the corresponding **plus/minus key.**
- Confirm input with the "Enter" function by pressing the right **plus key**.
- Enter the code, see Chapter **11.03 Entering/altering the access code**..

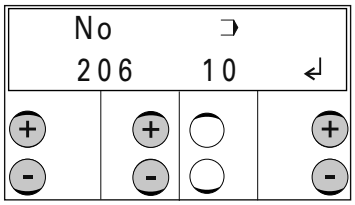

- Call up the parameter "206" (copy program) with the corresponding **plus/minus key**.
- Confirm the input with the "Enter" function by pressing the right **plus key**. On the display the next free program number (variable programs from **1-39)** appears next to the parameter.

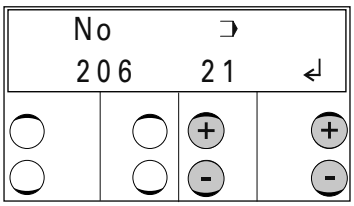

- Call up the desired program number with the corresponding **plus/minus key**.
- Confirm the input with the "Enter" function by pressing the corresponding **plus/minus key**. The next steps for altering the program are described in Chapter **11.05.02 Creating/ modifying variable programs**.

11.05.02 Creating / modifying vario programs in the buttonhole mode

A variable program is written with the parameters of the function group "**300**".
The variable program can be adapted to individual requirements by altering individual parameters.

As illustrated below variable programs consist of 4 sections:

- Seam A
- Seam C
- Bar B
- Bar D

In addition to the purely geometrical data a variable program is also defined by further parameters:

- Buttonhole models (1 to 31), see Chapter **11.05.04 Buttonhole and bartack model**
- Number of stitches A, B, C, D
- Secondary thread tension A, B, C, D

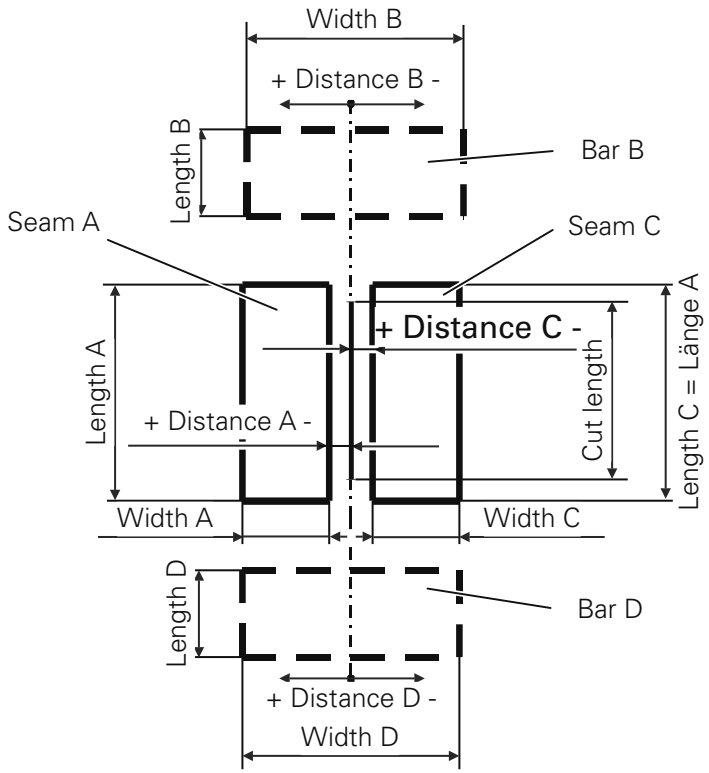

Parameter	Description
301	Program number
302	Cut length (mm)
303	Buttonhole model
304	Distance A (mm)
305	Width A (mm)
306	Length A (mm)
307	Number of stitches A
308	Secondary thread tension A
309	Width B (mm)
310	Width B1 (mm)
311	Length B (mm)
312	Length B1 (mm)
313	Number of stitches B
314	Distance B (mm)
315	Secondary thread tension B
316	Distance C (mm)
317	Width C (mm)
318	Length C (mm
319	Number of stitches C
320	Secondary thread tension C
321	Width D (mm)
322	Width D1 (mm)
323	Length D (mm)
324	Length D1 (mm)
325	Number of stitches D
326	Distance D (mm)
327	Secondary thread tension D

11.05.03 Creating / modifying vario programs in the bartack mode

A variable program is written with the parameters of the function group "**300**".
The variable program can be adapted to individual requirements by altering individual parameters.

As illustrated below, vario programs consist of **2** sections

- 1st seam (forwards seam)
- 2nd seam (reverse seam)

In addition to the purely geometrical data, a vario program is also defined with further parameters:

- Bartack model 35, see Chapter **11.05.04 Buttonhole and bartack models**
- Secondary thread tension 1st and 2nd seam

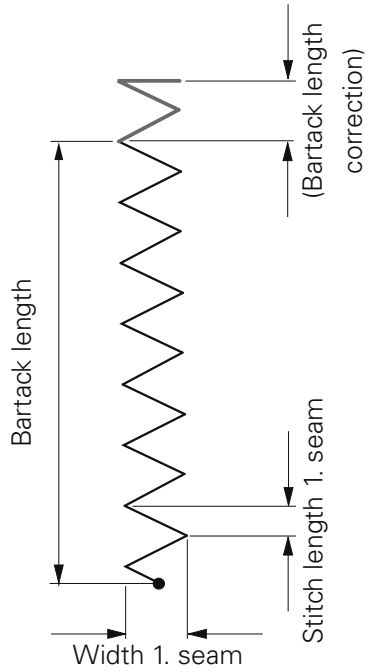

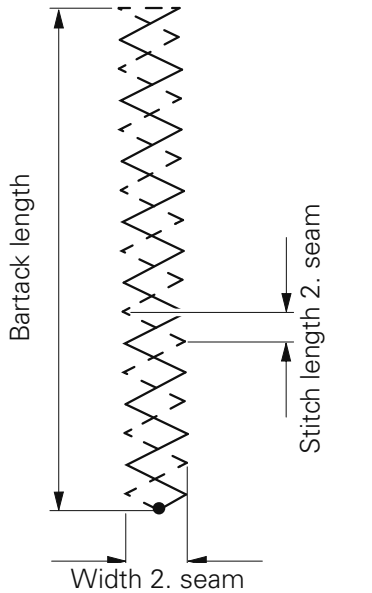

Parameter	Description
301	Program number
302	Bartack length [mm]
303	Bartack model
304	no function (bartack model 35)
305	Width of 1st seam [mm]
306	Stitch length 1st seam [mm]
307	Secondary thread tension 1st seam
308	no function (bartack model 35)
309	Width 2nd seam [mm]
310	Stitch length 2nd seam [mm]
311	Secondary thread tension 2nd seam

11.05.04 Buttonhole and bartack model

In the following table, in addition to the bartack model, all buttonhole models are shown with their appropriate bartacks.

Number	Buttonhole model	Bar B	Bar D
1		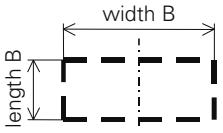	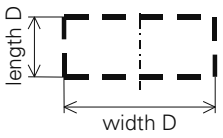
2	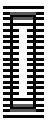	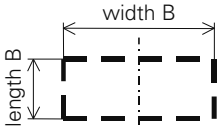	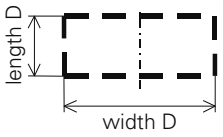
3		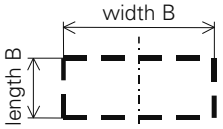	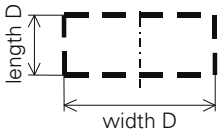
4		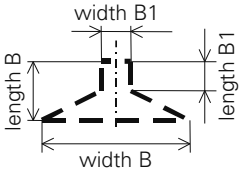	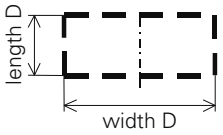
5	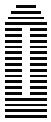	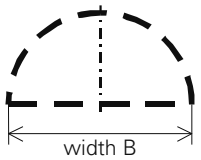	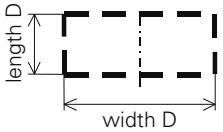
6		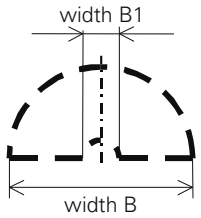	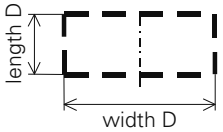
7		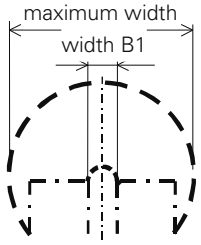	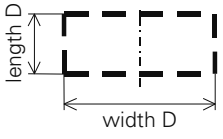
8		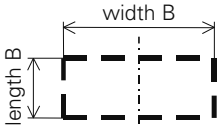	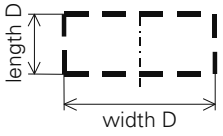
9	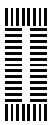	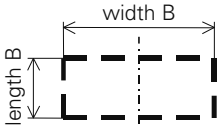	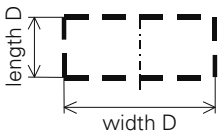

Number	Buttonhole model	Bar B	Bar D
10		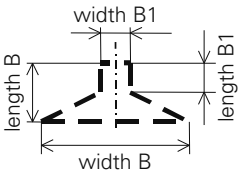	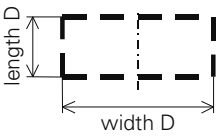
11		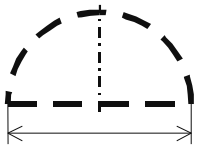	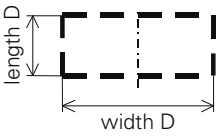
12		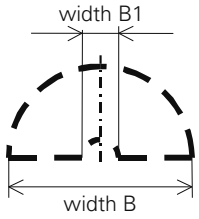	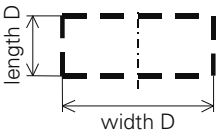
13		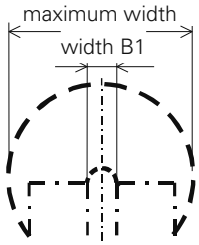	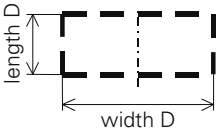
14	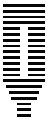	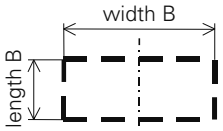	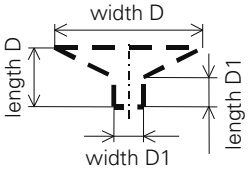
15		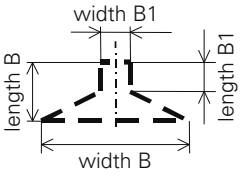	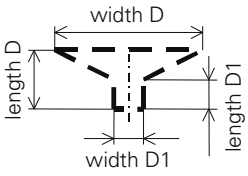
16		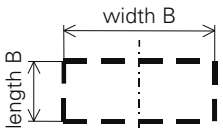	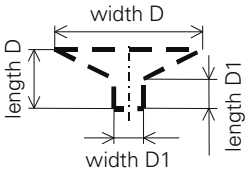
17		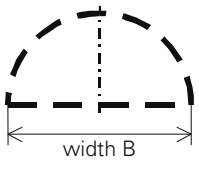	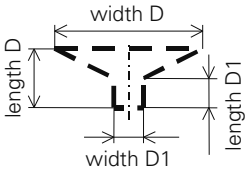
18		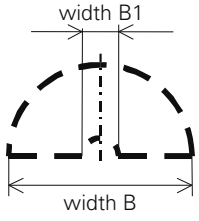	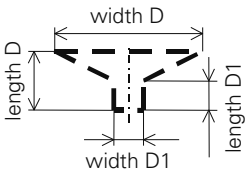

Number	Buttonhole model	Bar B	Bar D
19		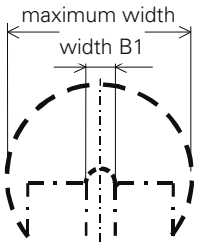	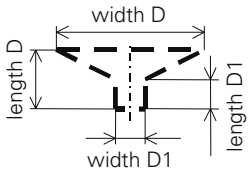
20	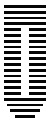	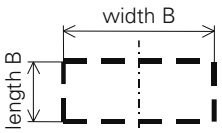	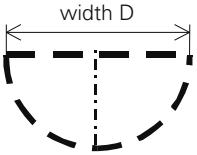
21		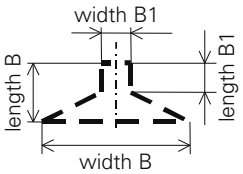	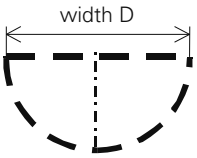
22		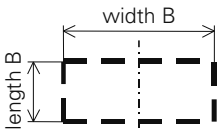	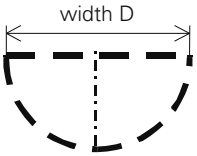
23	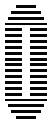	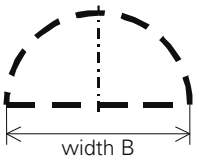	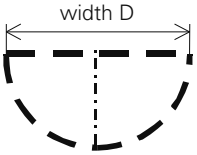
24		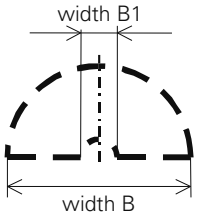	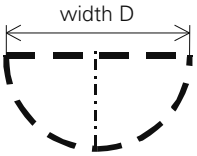
25		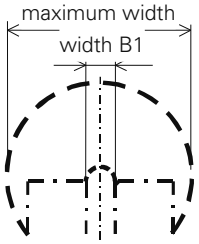	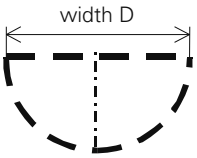
26		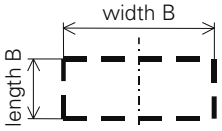	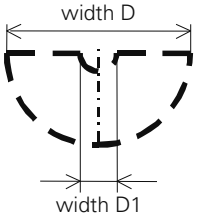

Number	Buttonhole model	Bar B	Bar D
27		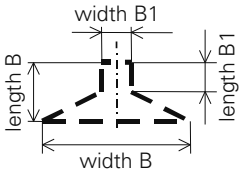	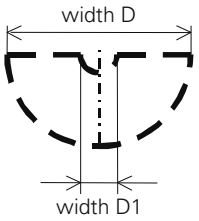
28		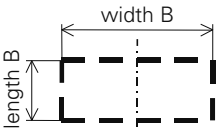	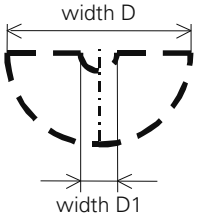
29		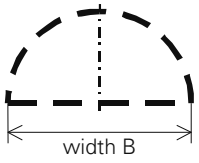	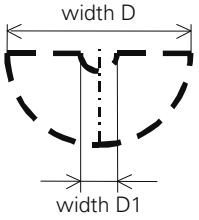
30	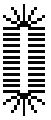	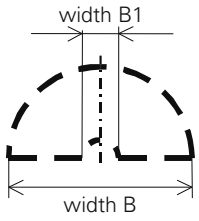	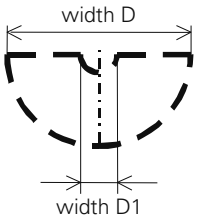
31		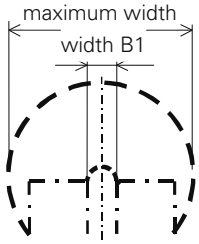	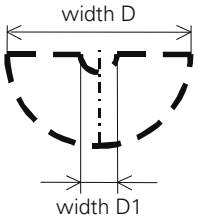

Number	Bartack model		
35			

11.05.05 Table for entering a buttonhole program

Parameter	Description	Value for Program No.: __	Value for Program No.: __	Value for Program No.: __	Value for Program No.: __
301	Program number				
302	Cut length (mm)				
303	Buttonhole model				
304	Distance of left seam from centre of cutting line (needle penetration right) = distance A (mm)				
305	Width of left seam = width A (mm)				
306	Length of left seam (same length as right purl seam) = length A (mm)				
307	Number of stitches in left seam = number of stitches A				
308	Secondary thread tension left seam				
309	Width of 1st bar = width B (mm)				
310	Second width of 1st bar = width B1 (mm)				
311	Length of 1st bar = length B (mm)				
312	Second length of 1st bar = length B1 (mm)				
313	Number of stitches in 1st bar = number of stitches B				
314	Distance of 1st bar to centre of cutting line = distance B (mm)				
315	Secondary thread tension of 1st ba				
316	Distance of right seam from centre of cutting line (needle penetration left) = distance C (mm)				
317	Width of right seam = width C (mm)				
318	Length of right seam (same length as left purl seam) = length C (mm)				
319	Number of stitches in right seam = number of stitches C				
320	Secondary thread tension right purl seam				
321	Width of 2nd bar = width D (mm)				

Parameter	Description	Value for Program No.: __	Value for Program No.: __	Value for Program No.: __	Value for Program No.: __
322	Second width of 2nd bar = width D1				
323	Length of 2nd bar = length D (mm)				
324	Second length of 2nd bar = length D1 (mm)				
325	Number of stitches in second bar = number of stitches D				
326	Distance of second bar to centre of cutting line = distance D (mm)				
327	Secondary thread tension of 2nd bar				

11.05.06 Table for entering a bartack program

Parameter	Description	Value for Program No.: __	Value for Program No.: __	Value for Program No.: __	Value for Program No.: __
301	Program number				
302	Bartack length [mm]				
303	Bartack model				
304	No function (bartack model 35)				
305	Width of 1st seam [mm]				
306	Stitch length 1st seam [mm]				
307	Secondary thread tension in the 1st seam (I = off, II = on)				
308	No function (bartack model 35)				
309	Width of 2nd seam [mm]				
310	Stitch length of the 2nd seam [mm]				
311	Secondary thread tension 2nd seam (I = off, II = on				

11.06 Sequences

In a maximum of **3** different sequences, up to **33** vario programs in each sequence can be combined in any order and processed later. Before sequences can be generated, appropriate vario programs (buttonhole or bartack programs) have to be created, see Chapter **11.05 Vario programs**. The sequences are arranged with parameters "**111**", "**112**" and "**113**", which, in the sequence mode, are directly allocated to the appropriate keys on the control panel, see Chapter **7.05 Control panel**. Within the sequence the functions "cutting" and "double sewing cycle" can be allotted to the buttonhole programs.

11.06.01 Creating sequences

The following example describes how sequences are created.

- Switch on the machine.
- TE
- Select the input mode (LED in the key is on).

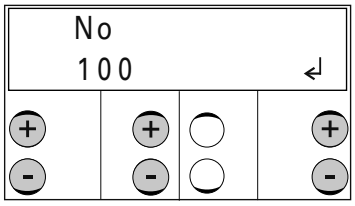

- Select the function group "**100**" with the corresponding **plus/minus key**.
- Confirm input with the "Enter" function by pressing the right **plus key**.

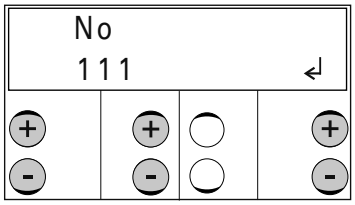

- Call up parameter "**111**" with the corresponding **plus/minus key**.
- Confirm input with the "Enter" function by pressing the right **plus key**.

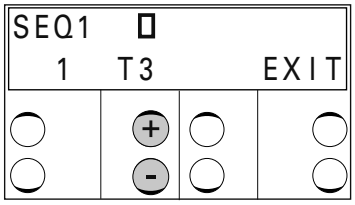

- Select the desired vario program, e.g. bartack program "T**3**" with the corresponding **plus/minus key**.

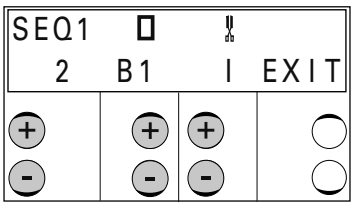

- Call up next sequence position with the corresponding **plus/minus key**.
- Select the next desired vario program, e.g. buttonhole program "B1" with the corresponding **plus/minus key**.
- Switch off the "cutting" function with the corresponding **plus/minus key**.

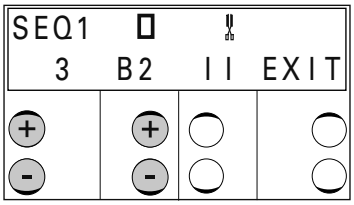

- Call up next sequence position with the corresponding **plus/minus key**.
- Select the next desired vario program, e.g. buttonhole program "B2" with the corresponding **plus/minus key**.



- Switch on e.g. the "double sewing cycle" function (LED in the key is on).

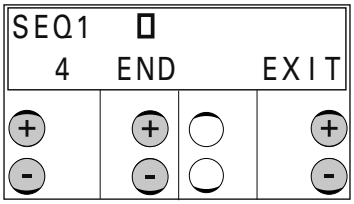

- Call up next sequence position with the corresponding **plus/minus key**.
  The end of the sequence is defined by the string of characters "END" at the 4th sequence position. The vario program "B2" is then recognized as the last program in the sequence.
- Conclude the sequence input with the "EXIT" function.

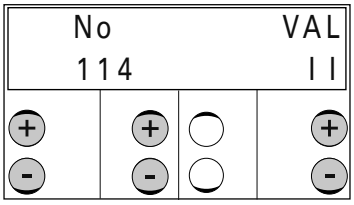

- Call up parameter "114" (selection of the sequence mode) with the corresponding **plus/minus key** and switch on the sequence mode (value "II").



- Conclude the parameter input by switching to the sewing mode (LED in the key goes off).

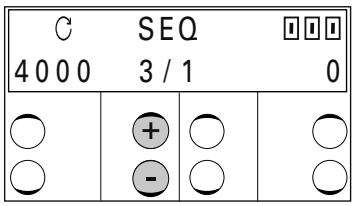

In the sequence mode the number of programs belonging to the sequence is shown on the display together with the current program. It is also possible to switch to the individual programs by hand with the corresponding **plus/minus key**.

11.07 Selecting programs

By selecting currently required programs, the display of too many programs can be reduced to a minimum.

- Switch on the machine.

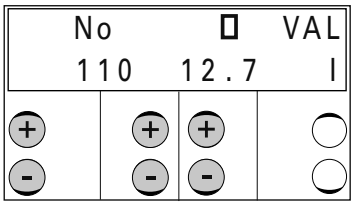

- Call up parameter "**110**" (selecting programs).
- Select the cutting length or the vario or special programs for the buttonhole with the centre **plus/minus key**.
- By pressing the **tacting forwards** or **tacting in reverse keys**, the cutting lengths for the buttonholes or variable/special programs can be selected, or already selected values can be deleted again. After selection a "*" appears on the display next to the selected value.
- Repeat selection for all desired values.

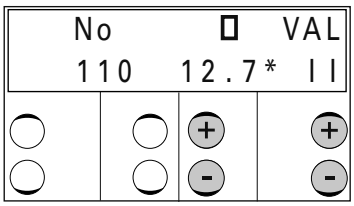

- Call up selection with the corresponding **plus/minus key**.
  "I" = deactivate; "II" = activate
- Conclude parameter input by switching to the sewing mode (LED in the key goes off).

TE

If the selected program values do not match the previous program value, error signal "ERROR **28**" appears.

- Acknowledge error message.
- Select the required program value with the corresponding **plus/minus key**.

TE

After this input, only the selected program values are activated.

Other programs can be selected or the selection deleted as required.

11.08 Special programs

The programs **40** to **49** are reserved for special programs. With the programming software PSP the seam contours are freely programmed on a PC in the available sewing area, which depends on the sub-class. The images are then transferred by connecting the PC to the machine. The patterns are then transferred to the machine with an SD-memory card.

11.09 SAM (Sewing Application Manager)

SAM is a PC-program with added features for graphic support when programming variable programs and is available as an option. The details of the SAM functions are:

- Administration of all fixed, variable and special programs
- Visualisation of all fixed and variable programs (parameters, shape and stitch position)
- Creation of variable programs with the support of graphics by entering parameters
- Transfer of variable programs from and to the machine (with SD-memory card)
- Flash programming (software update of the machine)

11.10 Program Management

IIn the program management the programs filed in the machine memory or on connected SD-memory cards are displayed and can be deleted or copied. Commercially available SD-memory cards with a storage capacity of max. 512 MB can be inserted in the control panel. The data is stored in machine-relevant sub-directories. The way to insert or remove the SD-memory card is described in Chapter **9.10.**

- The variable programs **1** – **39** are stored in the files **01** – **39,**
- the special programs **40** – **49** in the files **40** – **49** and
- the machine data in the MD file.

Should the SD-memory cards need to be formatted by the PC, they must be formatted in the format "FAT**16".** Alternatively the SD-memory cards can also be formatted on the corresponding machine with the formatting function, see Chapter **11.10.08 Formatting the SD-memory card.**

11.10.01 Calling up the program management

- Switch on the machine.



- Select the input mode (LED in the key is on).



- Call up the program management.

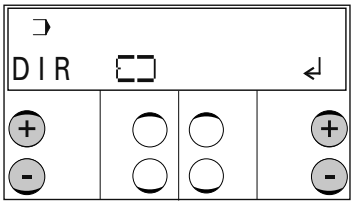

After the program management has been called up, the first menu item appears (display of data in the machine memory).
Confirm the selection of the menu item with the "Enter" function by pressing the right **plus key**. In this example the contents of the machine memory are then displayed.
The other menu items can be called up by pressing the left **plus/minus keys**.

The following menu items are available in the program management:

- Display data in the machine memory
- Display data on the connected SD-memory card
- Copy data to the SD-memory card
- Copy data to the machine memory (from the SD-memory card)
- Delete data in the machine memory
- Delete data on SD-memory card
- Format SD-memory card

11.10.02 Display of the data in the machine memory

- Call up the program management, see Chapter **11.10.01 Calling up the program management**.

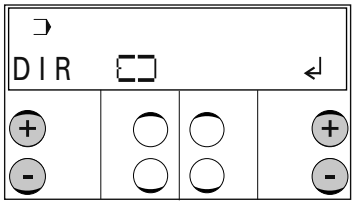

- Press the left **plus/minus keys** until the corresponding menu item appears.
- Confirm the selection of the menu item with the "Enter" function by pressing the right **plus key**.

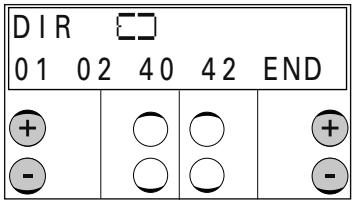

- By pressing the right **plus/minus keys** it is possible to scroll through the display of the machine memory.
- When the left **plus/minus keys** are pressed, the other menu items of the program management are called up.

11.10.03 Display of the data on the SD-memory card

- Call up the program management, see Chapter **11.10.01 Calling up the program management**.

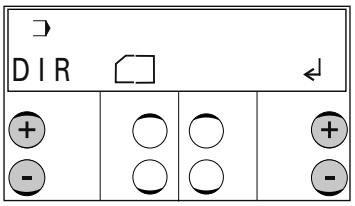

- Press the left **plus/minus keys** until the corresponding menu item appears.
- Confirm the selection of the menu item with the "Enter" function by pressing the right **plus key**.

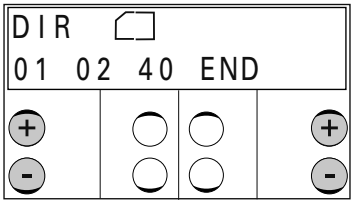

- By pressing the right **plus/minus keys** it is possible to scroll through the display of the SD-memory card.
- When the left **plus/minus keys** are pressed, the other menu items of the program management are called up.

11.10.04 Copying data onto the SD-memory card

- Call up the program management, see Chapter **11.10.01 Calling up the program management**.

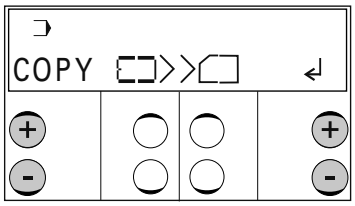

- Press the left **plus/minus keys** until the corresponding menu item appears.
- Confirm the selection of the menu item with the "Enter" function by pressing the right **plus key**.

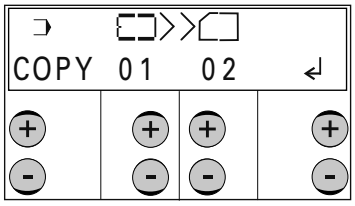

- Press the corresponding **plus/minus keys** to select the data to be copied from the machine memory onto the SD-memory card:

  MD = machine parameters
  01 - 39 = variable programs
  40 - 49 = special programs
  ALL = all variable and special programs

- The copying process is started with the "Enter" function by pressing the right **plus key**.

If the data for copying already exists, a safety enquiry appears before overwriting the data. Press the right **plus key** to confirm the copying process. The copying process can be stopped by pressing the right **minus key**.

- When the left **plus/minus keys** are pressed, the other menu items of the program management are called up.

11.10.05 Copying data into the machine memory

- Call up the program management, see Chapter **11.10.01 Calling up the program management**.

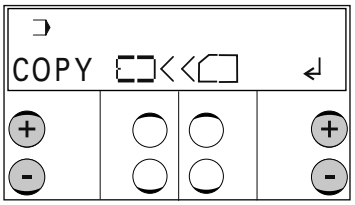

- Press the left **plus/minus keys** until the corresponding menu item appears.
- Confirm the selection of the menu item with the "Enter" function by pressing the right **plus key**.

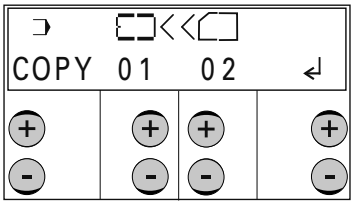

- Press the corresponding **plus/minus keys** to select the data to be copied from the SD-memory card into the machine memory:

  MD = machine parameters
  01 - 39 = variable programs
  40 - 49 = special programs
  ALL = all variable and special programs

- The copying process is started with the "Enter" function by pressing the right **plus key**.

If the data for copying already exists, a safety enquiry appears before overwriting the data. Press the right **plus key** to confirm the copying process. The copying process can be stopped by pressing the right **minus key**.

- When the left **plus/minus keys** are pressed, the other menu items of the program management are called up.

11.10.06 Deleting data in the machine memory

- Call up the program management, see Chapter **11.10.01 Calling up the program management**.

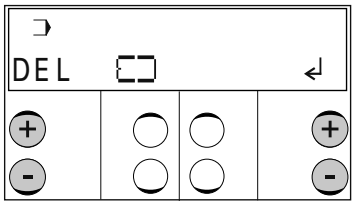

- Press the left **plus/minus keys** until the corresponding menu item appears.
- Confirm the selection of the menu item with the "Enter" function by pressing the right **plus key**.

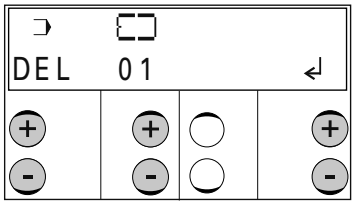

- Press the corresponding **plus/minus keys** to select the data to be deleted from the machine memory:

  01 - 39 = variable programs
  40 - 49 = special programs
  ALL = all variable and special programs
  Machine data cannot be deleted.

- The deleting process is started with the "Enter" function by pressing the right **plus key**.



Before the data is deleted, a safety enquiry ensues.

Press the right **plus key** to confirm the deleting process.

The deleting process can be stopped by pressing the right **minus key**.

- When the left **plus/minus keys** are pressed, the other menu items of the program management are called up.

11.10.07 Deleting data from the SD-memory card

- Call up the program management, see Chapter **11.10.01 Calling up the program management**.

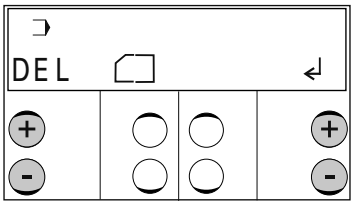

- Press the left **plus/minus keys** until the corresponding menu item appears.
- Confirm the selection of the menu item with the "Enter" function by pressing the right **plus key**.

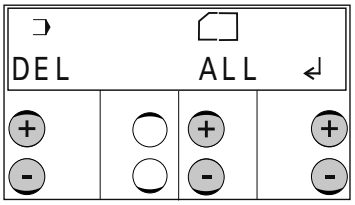

- Press the corresponding **plus/minus keys** to select the data to be deleted from the SD-memory card:

  01 - 39 = variable programs
  40 - 49 = special programs
  ALL = all variable and special programs

- The deleting process is started with the "Enter" function by pressing the right **plus key**.

Before the data is deleted, a safety enquiry ensues.

Press the right **plus key** to confirm the deleting process.

The deleting process can be stopped by pressing the right **minus key**.

- When the left **plus/minus keys** are pressed, the other menu items of the program management are called up.

11.10.08 Formatting the SD-memory card

- Call up the program management, see Chapter **11.10.01 Calling up the program management**.

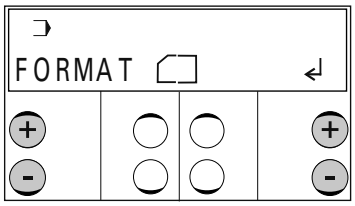

- Press the left **plus/minus keys** until the corresponding menu item appears.
- The formatting process is started with the "Enter" function by pressing the right **plus key**.

Before formatting begins, a safety enquiry ensues.

Press the right **plus key** to confirm the formatting process.

The formatting process can be stopped by pressing the right **minus key.**

- When the left **plus/minus keys** are pressed, the other menu items of the program management are called up

12 Care and maintenance

12.01 Maintenance intervals

Clean the hook compartment	daily
Clean the entire machine	once a week
Clean air filter of air filter / lubricator	as required
Check the air pressure	daily, before use
Check the oil level	daily, before use



These maintenance intervals are calculated for the average running time of a single shift operation. If the machine is operated for longer periods, shorter maintenance intervals are recommended.

12.02 Cleaning the machine

The cleaning cycle required for the machine depends on following factors:

- Single or several shift operation
- Amount of dust resulting from the workpiece

It is therefore only possible to stipulate the best possible cleaning instructions for each individual case.



For all cleaning work the machine must be disconnected from the mains by switching off the on/off switch or by removing the mains plug, and the knife must be mechanically locked to prevent knife engagement!

Danger of injury if the machine suddenly starts up or if the knife suddenly drops down.



To avoid breakdowns, the following cleaning work is recommended for single shift operation:

- Clean hook compartment and needle area of sewing head several times daily.
- Clean the entire machine at least once a week.

12.03 Cleaning the hook compartment



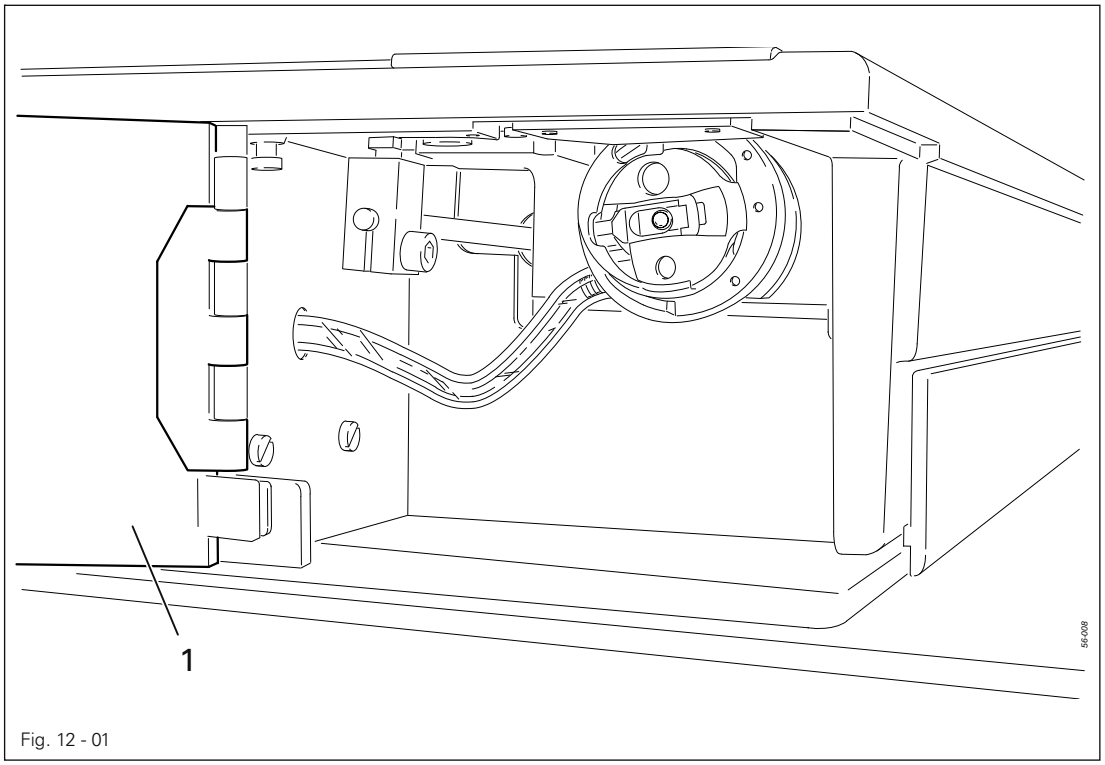

Fig. 12 - 01



Switch off the machine!

Lock knife mechanically to prevent knife engagement!

Danger of injury from the needle and knife!

- Open hook compartment cover **1.**
- Clean the hook and hook compartment daily, more often if in continuous use.

12.04 Cleaning the air filter of the air-filter / lubricator

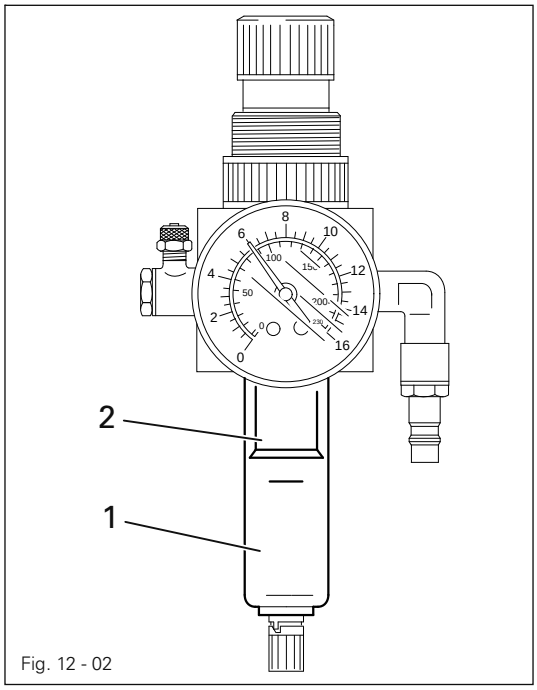

Fig. 12 - 02

Switch the machine off!

Disconnect the air hose at the air-filter / lubricator.

To drain water bowl 1:

- Water bowl 1 drains itself automatically whe the compressed-air hose is disconnected from the air-filter / lubricator.

Cleaning filter 2:

- Unscrew water bowl 1.
- Take out filter 2.
- Clean filter 2 with compressed air or isopropyl alkohol (part No. 95-665 735-91).
- Screw in filter 2 and screw on water bowl 1.

12.05 Checking/adjusting the air pressure

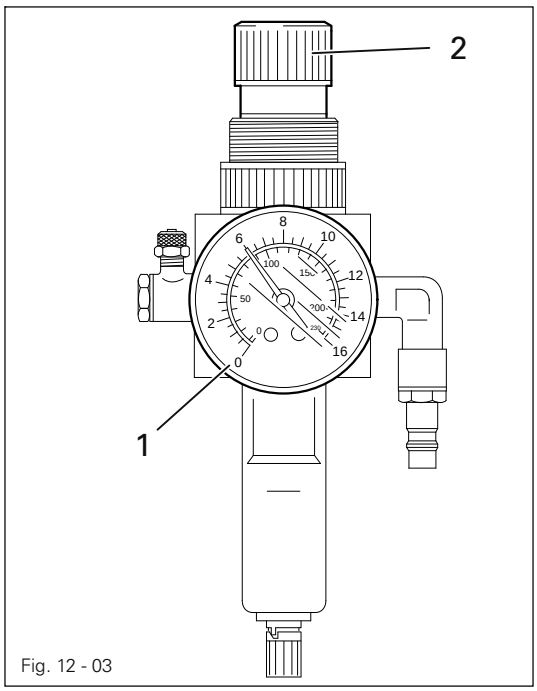

Fig. 12 - 03

- Before operating the machine, always check the air pressure on gauge 1.
- Gauge 1 must show a pressure of 6 bar.
- If necessary adjust to this reading.
- To do so, pull knob 2 upwards and turn it so that the gauge shows a pressure of 6 bar.

12.06 Check oil level for needle drive unit

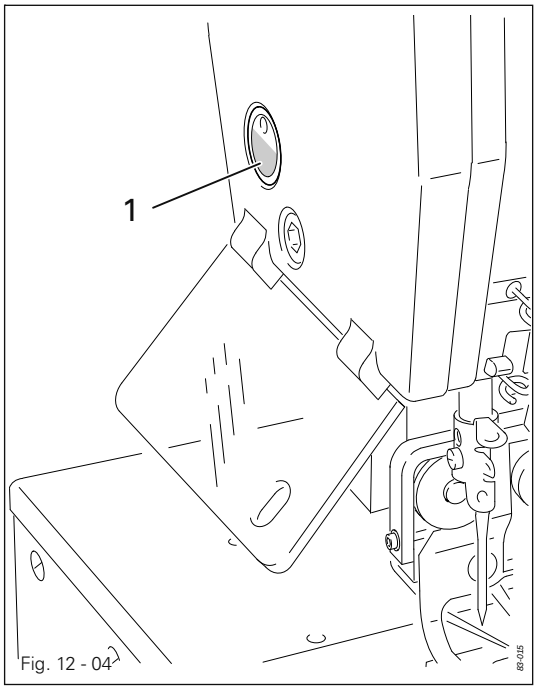

Fig. 12 - 04

There must always be oil in the storage tank.

- If necessary top up oil through hole **1** in the sight glass.

Only use oil with a medium viscosity of **10.00 mm²/s** at **40°C** and a density of **0.847 g/cm³** at **15°C**.

We recommend PFAFF sewing machine oil, part no. **280-1-120 105.**

12.07 Check oil level for the hook

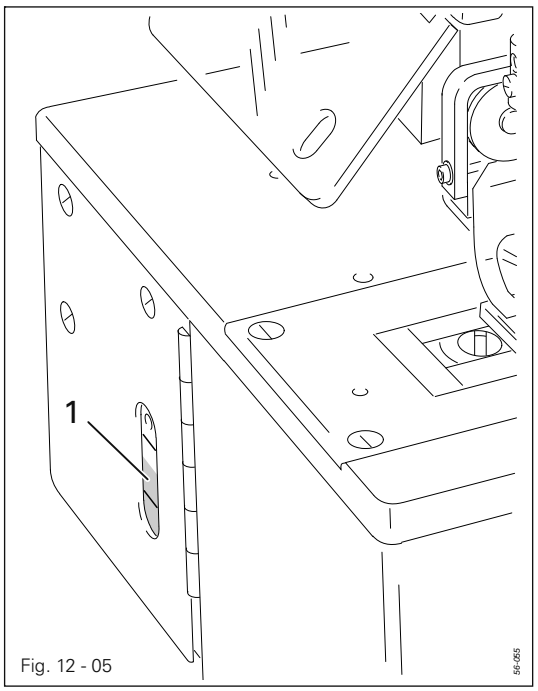

Fig. 12 - 05

The oil level in sight glass **1** must always be between the two markings.

- If necessary top up oil through hole **1** in the sight glass.

Only use oil with a medium viscosity of **10.00 mm³/s** at **40°C** and a density of **0.847 g/cm³** at **15°C**.

We recommend PFAFF sewing machine oil,
part no.**280-1-120 105.**

12.08 Check oil level for the compressor

- Check the oil level of the compressor as described in the enclosed instruction manual of the manufacturer, and if necessary top up oil.

13 Adjustment



Unless otherwise stipulated, the machine must be disconnected from the mains by switching it off at the on/off switch or by pulling out the mains plug, and the knife must be locked mechanically to prevent knife engagement.

13.01 Notes on adjustment

All following adjustments are based on a fully assembled machine and may only be carried out by expert staff trained for this purpose.
Machine covers, which have to be removed and replaced to carry out checks and adjustments, are not mentioned in the text.
The order of the following chapters corresponds to the most logical work sequence for machines which have to be completely adjusted. If only specific individual work steps are carried out, both the preceding and following chapters must be observed.
Screws, nuts indicated in brackets ( ) are fastenings for machine parts, which must be loosened before adjustment and tightened again afterwards.

13.02 Tools, gauges and other accessories

- 1 set of screwdrivers with blade widths from 2 to 10 mm
- 1 set of wrenches with jaw widths from 7 to 14 mm
- 1 set of Allan keys from 1.5 to 6 mm
- 1 offset screwdriver, Part no. 91-029 339-91
- 1 metal ruler, Part no. 08-880 218-00
- 1 screw clamp, Part no. 61-111 600-35/001
- 1 needle rise gauge 2.4 mm, Part No. 61-111 600-01
- 1 adjustment gauge, Part no. 61-111 635-86
- 1 adjustment gauge for lower knife stop, Part no. 61-111 635-85
- 1 adjustment gauge for upper knife stop, Part no. 61-111 635-93
- 1 Blocking pin, part no. 13-030 272-05
- 1 adjustment pin, Part no. 61-111 641-46

13.03 Abbreviations

t.d.c. = top dead centre

b.c.c. = bottom dead centre

13.04 Toothed belts of the hook drive unit

Requirement

Tensioner 1 should lightly touch the toothed belt.

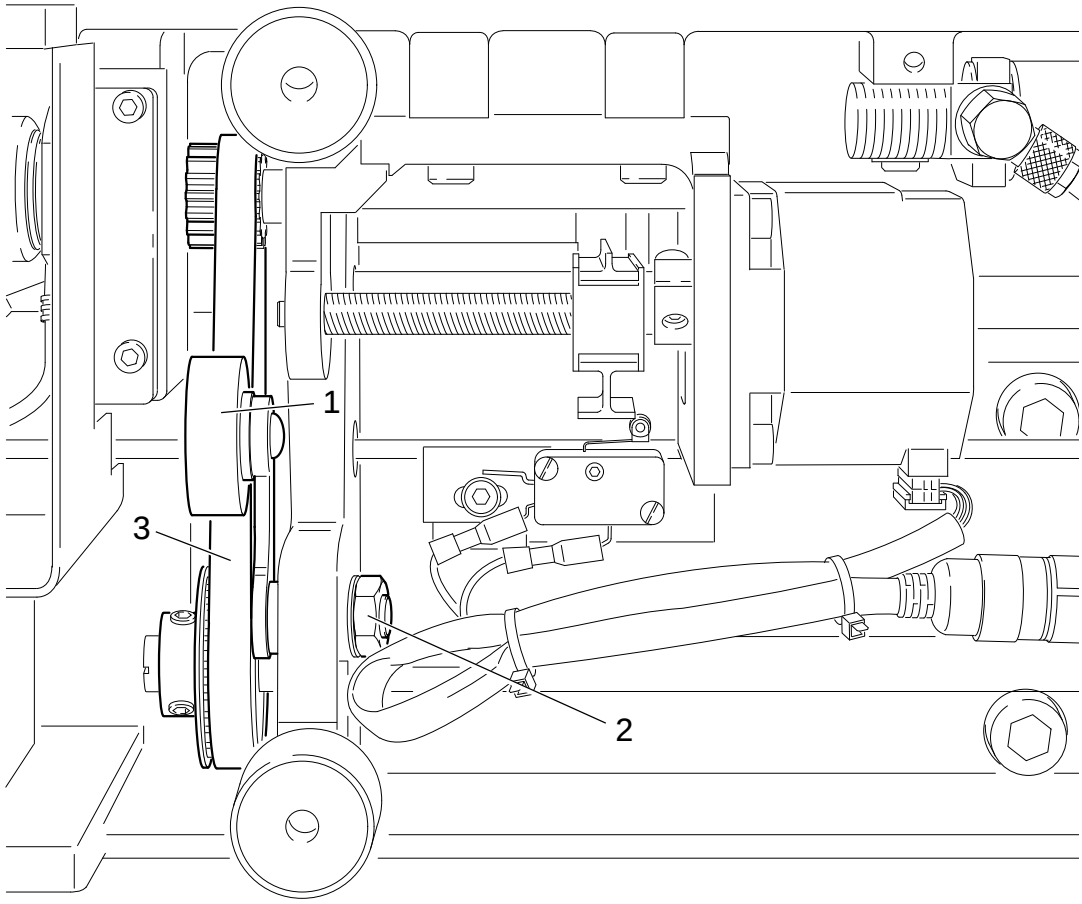

Fig. 13 - 01

- Loosen the machine's screw connection to the table.
- Tilt the machine backwards and dismount the pan.
- Adjust tensioner 1 (nut 2) according to the requirement.

If there are operational noises, repeat the adjustment.

13.05 Drive rods of the bobbin thread trimming device

Requirement
When cylinder 5 is fully extended, roller 3 should be positioned at a small distance (approx. 0.3 mm) from the curve bottom of slotted lever 4.

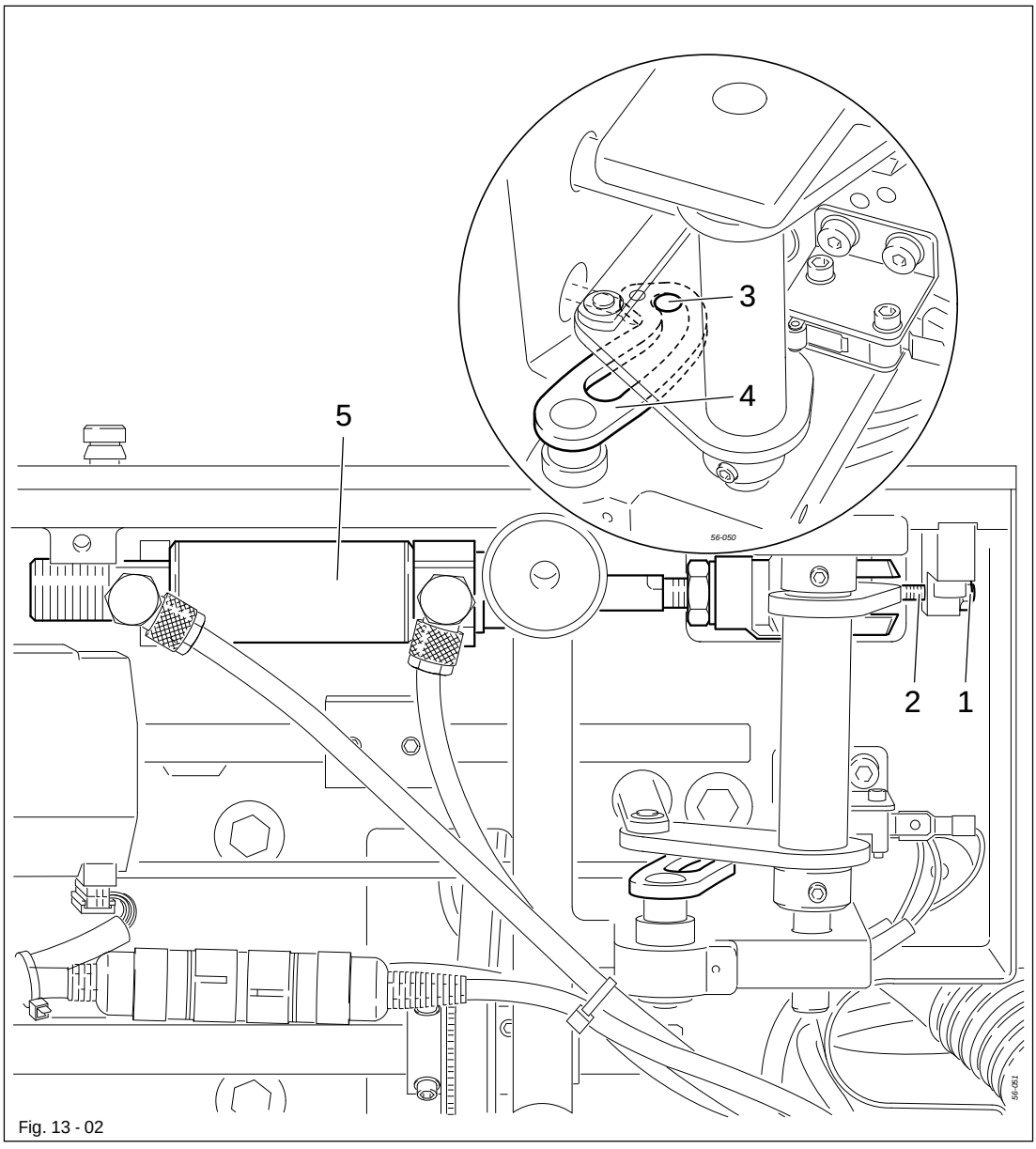

Fig. 13 - 02

- Loosen nut 1.
- Loosen screw 2 until roller 3 can be pushed into the curve bottom of slotted lever 4 by hand.
- Turn screw 2 to contact lever 4.
- To set the distance of roller 3 according to the requirement, turn screw 2 another ½ turn and fix it with nut 1.

When the cylinder is extented, there should be a distance of 204.5 mm between the centre of the yoke head bore hole and the bore hole for the cylinder suspension.

13.06 Switch for sewing start

Requirement
When cylinder 5 is fully extended, switch 1 should be operated.

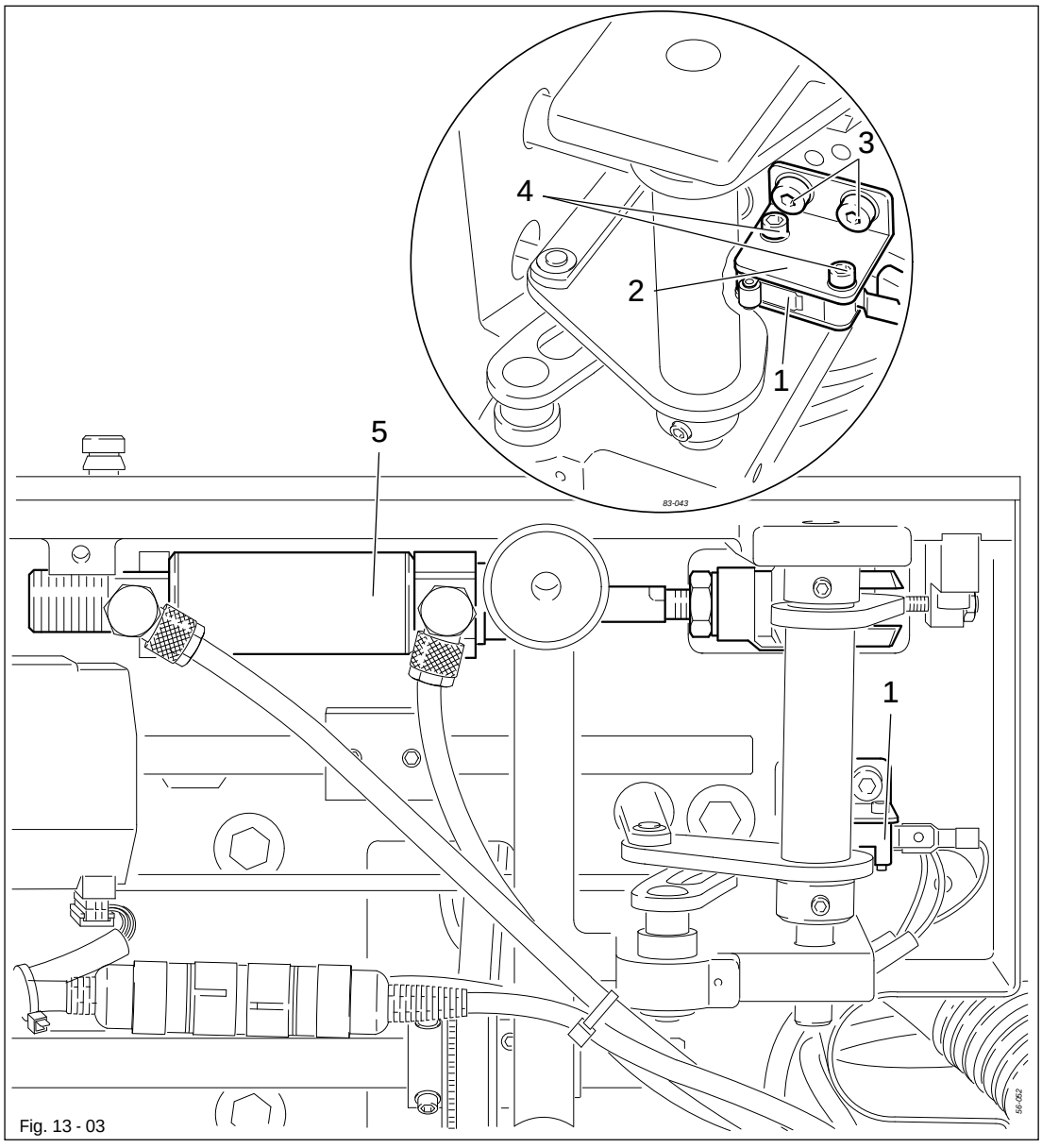

Fig. 13 - 03

- Adjust switch 1 or bracket 2 (screws 3 or 4) according to the requirement.

13.07 Basic position of the feed drive unit

Requirement
Switch 2 should operate when slide block 4 is 1.6 mm away from clamp 5.

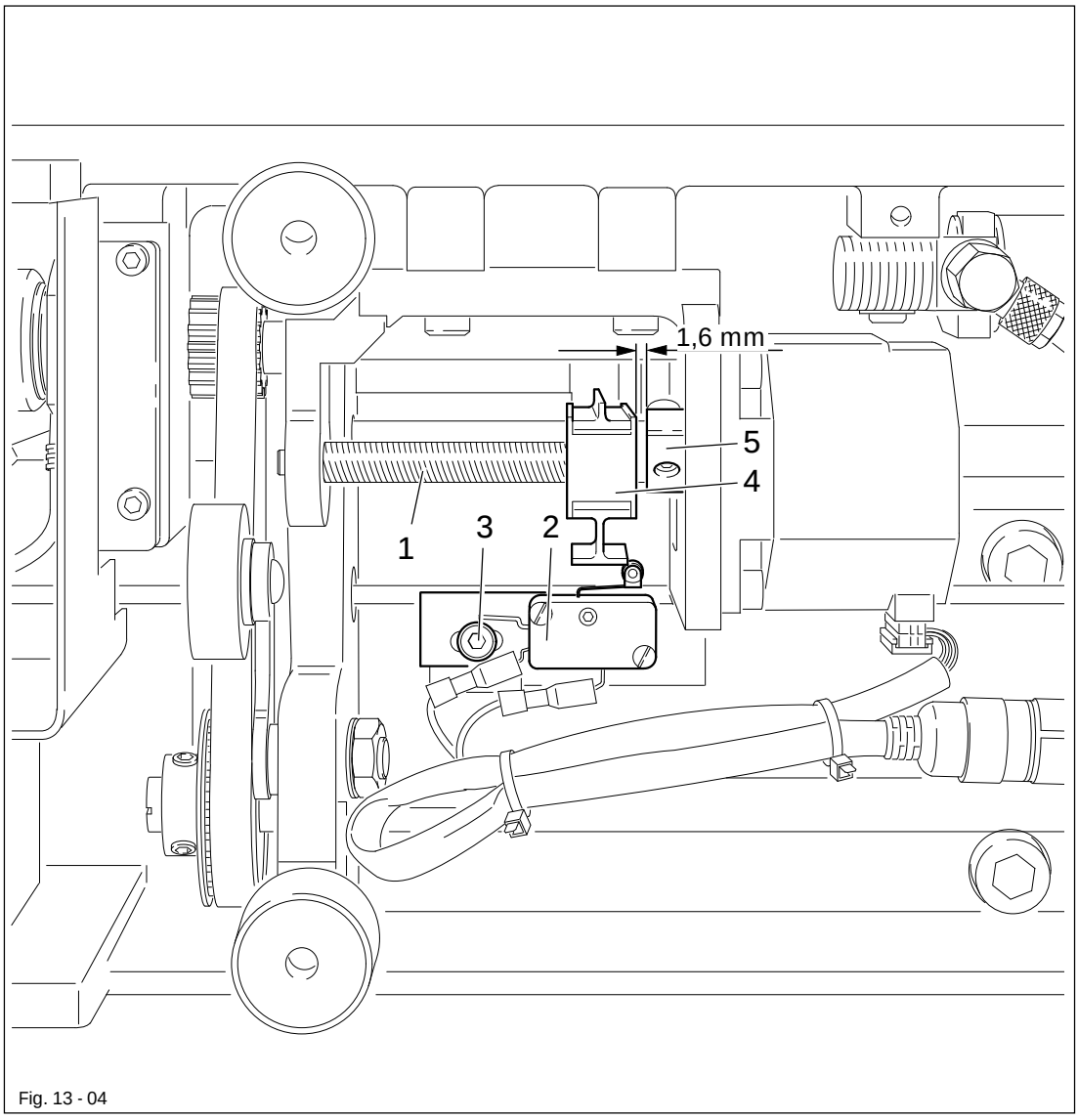

Fig. 13 - 04

- Set the distance of 1.6 mm by turning spindle 1.
- Adjust switch 2 (screw 3) according to the requirement.

13.08 Preliminary adjustment of the work clamp

Requirement

When the feed unit is in its basic position

1. The drive lever 1 should be flush with marking 8 on shaft 5,
2. The front edge of drive lever 1 should be flush with guide pin 4 and
3. Eccentric 6 should touch drive lever 1 without play.

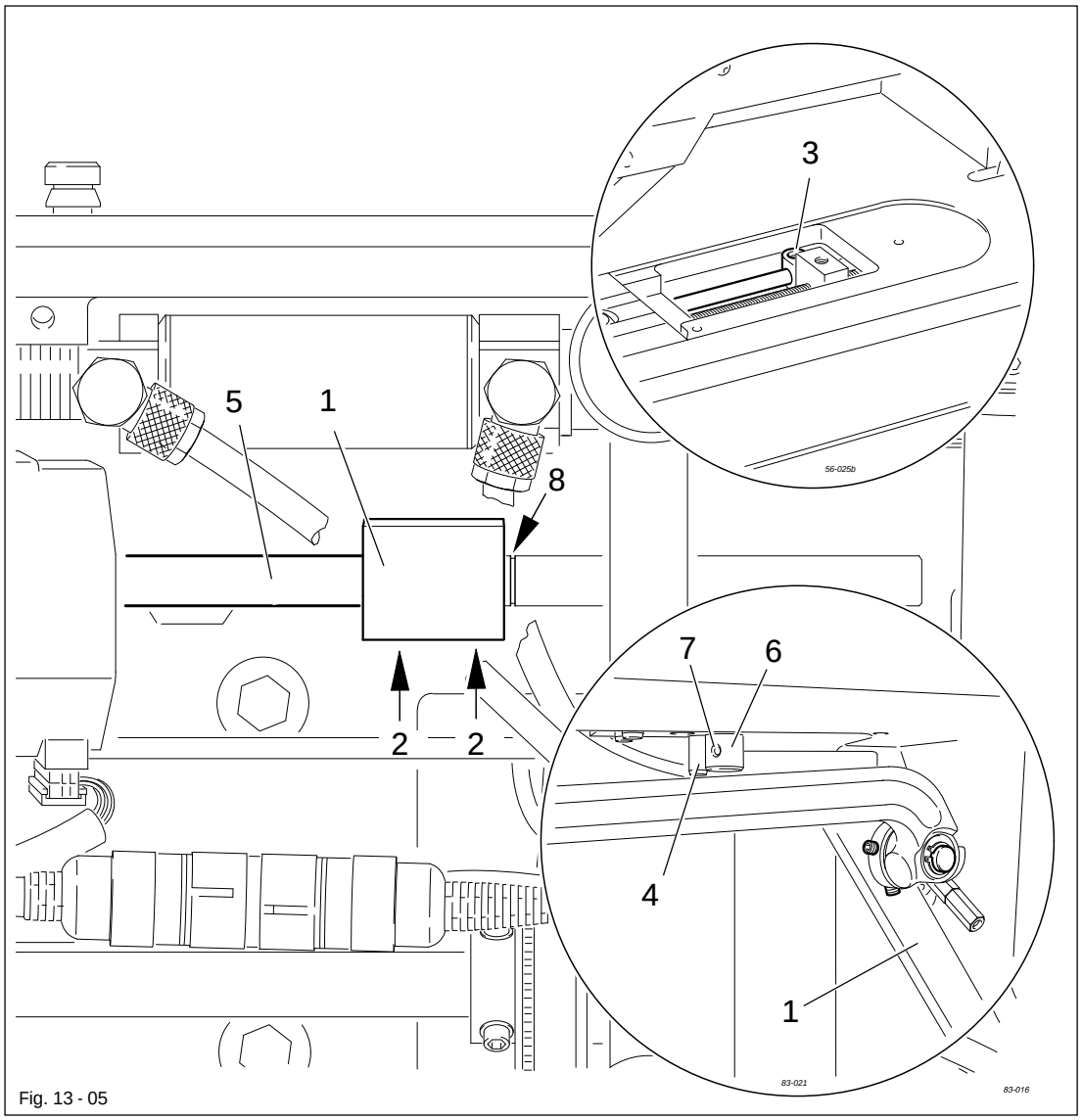

Fig. 13 - 05

- Adjust drive lever 1 (screws 2) according to requirement 1.
- Loosen screw 3.
- Bring drive lever 1 to stop on guide pin 4 and adjust shaft 5 according to requirement 2.
- Turn eccentric 6 (screw 7) according to requirement 3.
- Tighten screw 3.

13.09 Toothed belts of the main drive unit

Requirement

1. Toothed belt wheels 1 and 5 should be in alignment.
2. There should be a hardly noticeable amount of play between the toothed belt wheels 1 and 5 and the toothed belt 6.

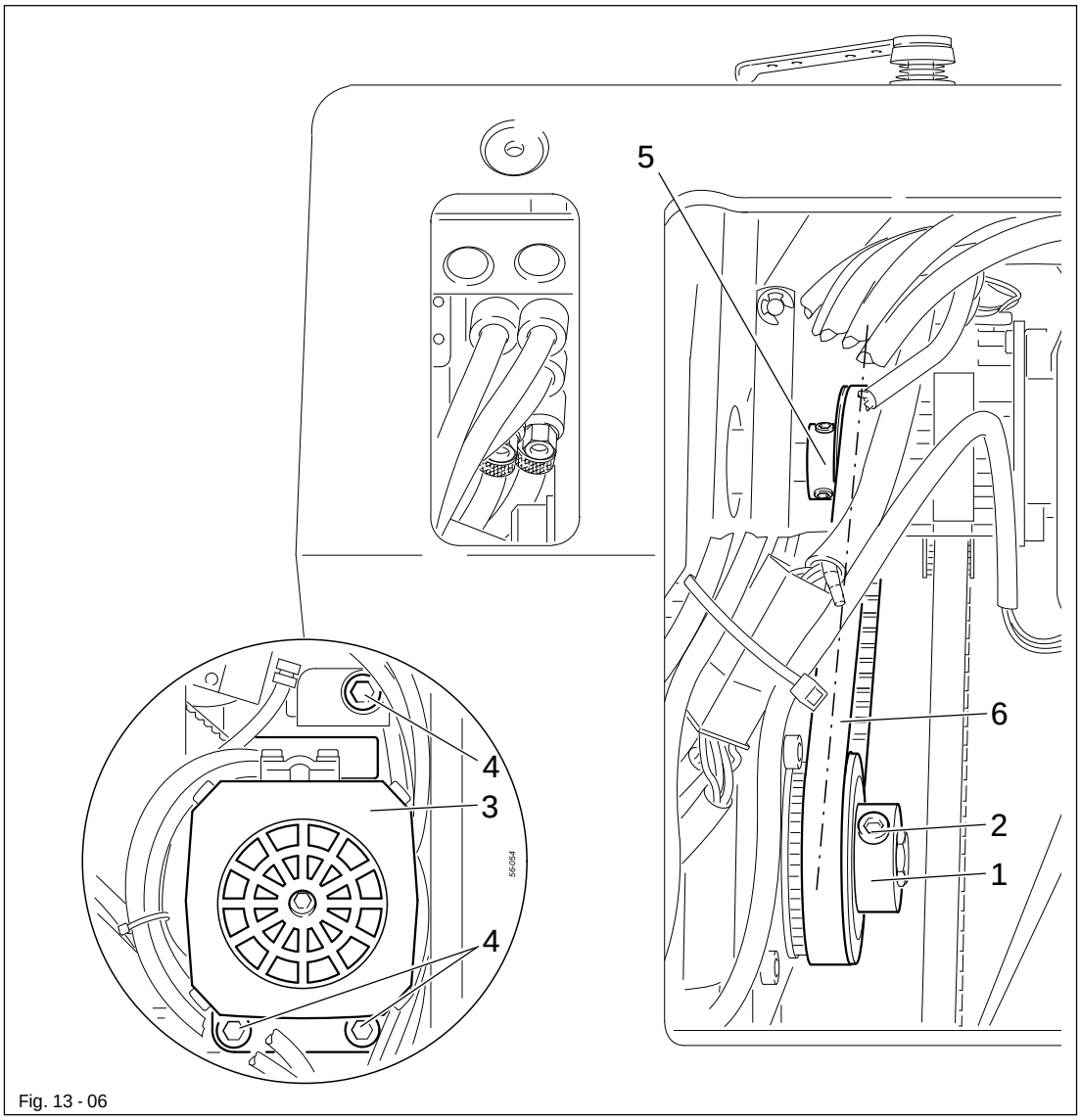

Fig. 13 - 06

- Adjust toothed belt wheel 1 (screws 2) according to requirement 1.
- Swing motor 3 (screws 4) according to requirement 2.

If there are operational noises, repeat the adjustments.

13.10 Preliminary adjustment of the needle height

Requirement
When the needle bar is at b.d.c. there should be a distance of 11 mm between the lower edge of the needle bar 1 and the needle plate.

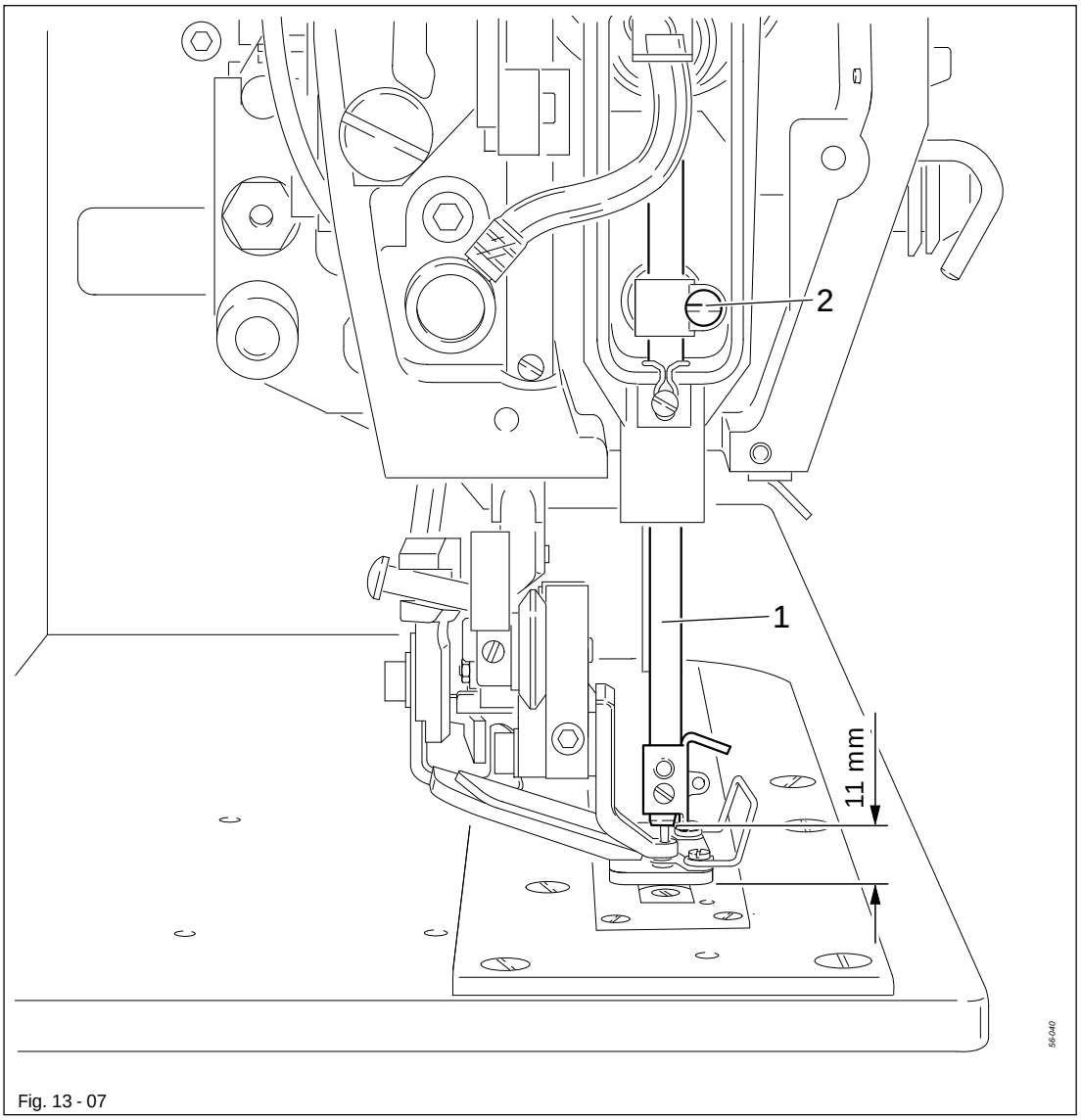

Fig. 13 - 07

- Adjust needle bar 1 (screw 2) according to the requirement.

13.11 Position of the needle plate in relation to the needle

Requirement
Needle plate base 3 should rest on the edge of the bed-plate cutout (see arrows). Seen in the direction of sewing the needle should enter the needle hole in the centre.

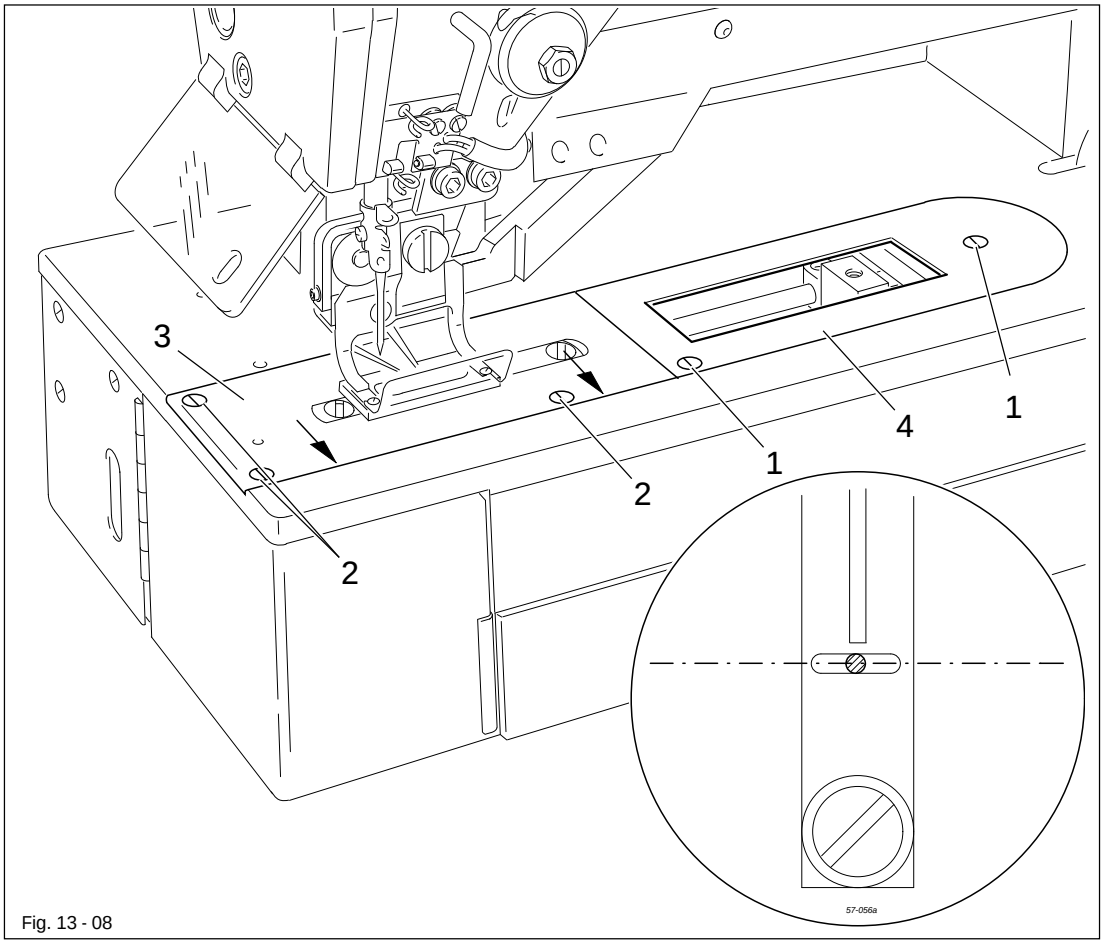

Fig. 13 - 08

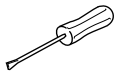

- Dismount feeder and insert a new needle.
- Loosen screws 1 and 2.
- Adjust needle plate base 3 according to the requirements.
- Tighten screws 2.
- Bring stop plate 4 into contact with needle plate base 3 and tighten screws 1.

13.12 Controlling the stitch symmetry

Requirement
Both the left and right point of penetration should be the same distance from the basic position of the needle (middle point of penetration).

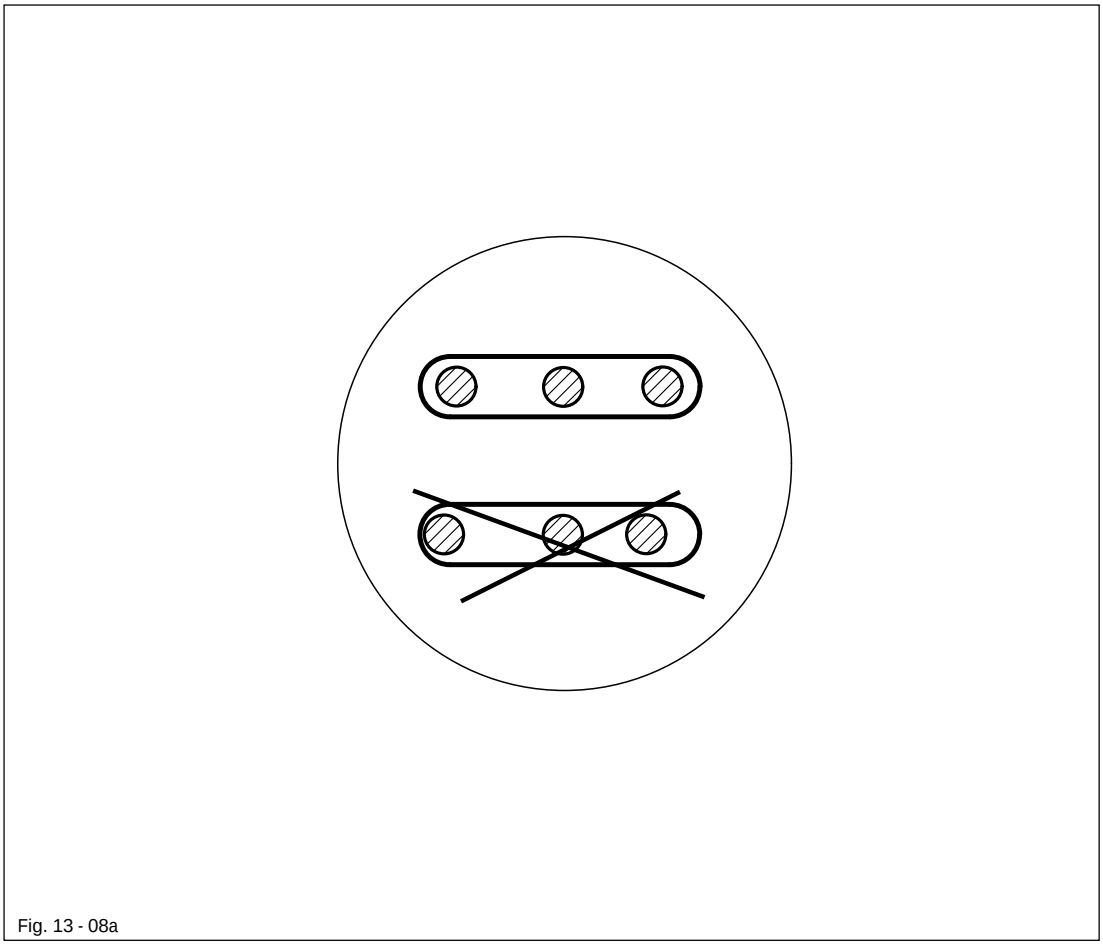

Fig. 13 - 08a

- Switch on the machine.
- Call up parameter 606.
- Place a thin piece of cardboard under the work clamp.
- Confirm input with the Enter key.
- Taking care to see that the X-coordinate is positioned at "0", penetrate the cardboard slightly by turning the balance wheel.
- Set the X-coordinate at -40 with the appropriate plus/minus key and penetrate the cardboard slightly by turning the balance wheel.
- Set the X-coordinate at 40 with the appropriate plus/minus key and penetrate the cardboard slightly by turning the balance wheel.

Set the X-coordinate back to "0" with the appropriate plus/minus key.

- Leave the operational mode Input and remove the cardboard.
- Control the symmetry of the penetration points.
- If the penetration points are not symmetrical, check the Chapter 13.13 Sensor board for the needle drive unit and Chapter 13.14 Basic position of the needle drive unit.

13.13 Sensor board of the needle drive (in dismantled state)

Requirement

1. The counter-sinking in eccentric 1 should match the locking hole in the supporting bracket.
2. The axis of the switch lug of eccentric 1 should be centred to the hybrid light barrier of the sensor board.

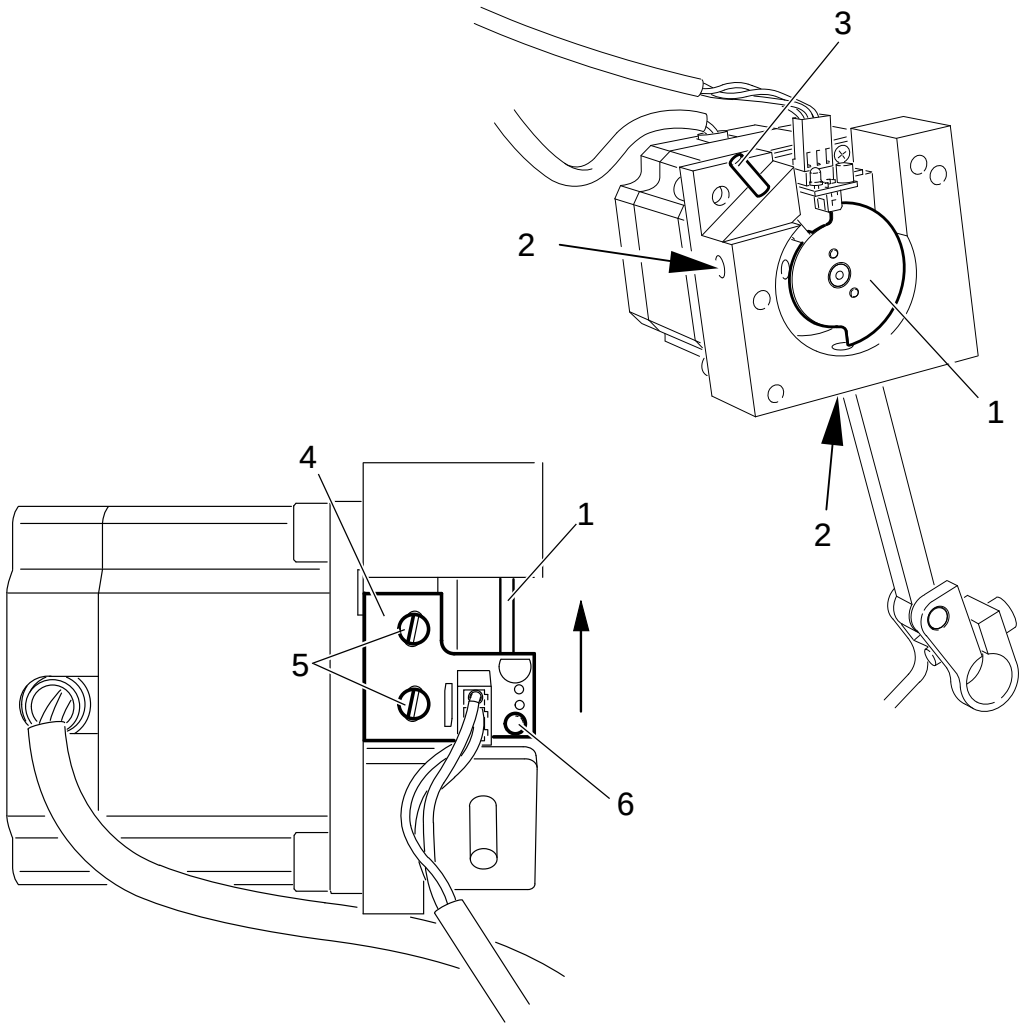

Fig. 13 - 09

To change the sensor board it is imperative to observe the following work steps!

Electric voltage!
Danger of electric shock if handled incorrectly!

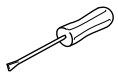

- Completely remove the needle drive unit (plugs remain connected).
- Loosen screws 2.
- Block eccentric 1 with blocking pin 3 (part no. 13-030 272-05) in the blocking hole of the supporting bracket.
- Switch machine off, then on again and wait until the stepping motor has stopped (ignore error signal on the control panel).
- Making sure that it is touching the rear wall, slide board 4 (screws 5) in the direction of the arrow, until light diode 6 lights up, and then slide it back until the light in diode 6 just goes out.
- Switch off the machine.
- Adjust eccentric 1 in accordance with requirement 2 and tighten screws 2.
- Remove blocking pin 3.
- Switch on the machine and check the needle drive unit in accordance with requirement 1.
- Switch off the machine.
- Install the needle drive unit and set it in accordance with Chapter 13.14 Basic setting of the needle drive unit.

13.14 Basic setting of the needle drive unit

Requirement
As seen crosswise to the direction of sewing, the needle should be positioned in b.d.c. needle bar, and when eccentric 1 is blocked, in the centre of the needle hole.

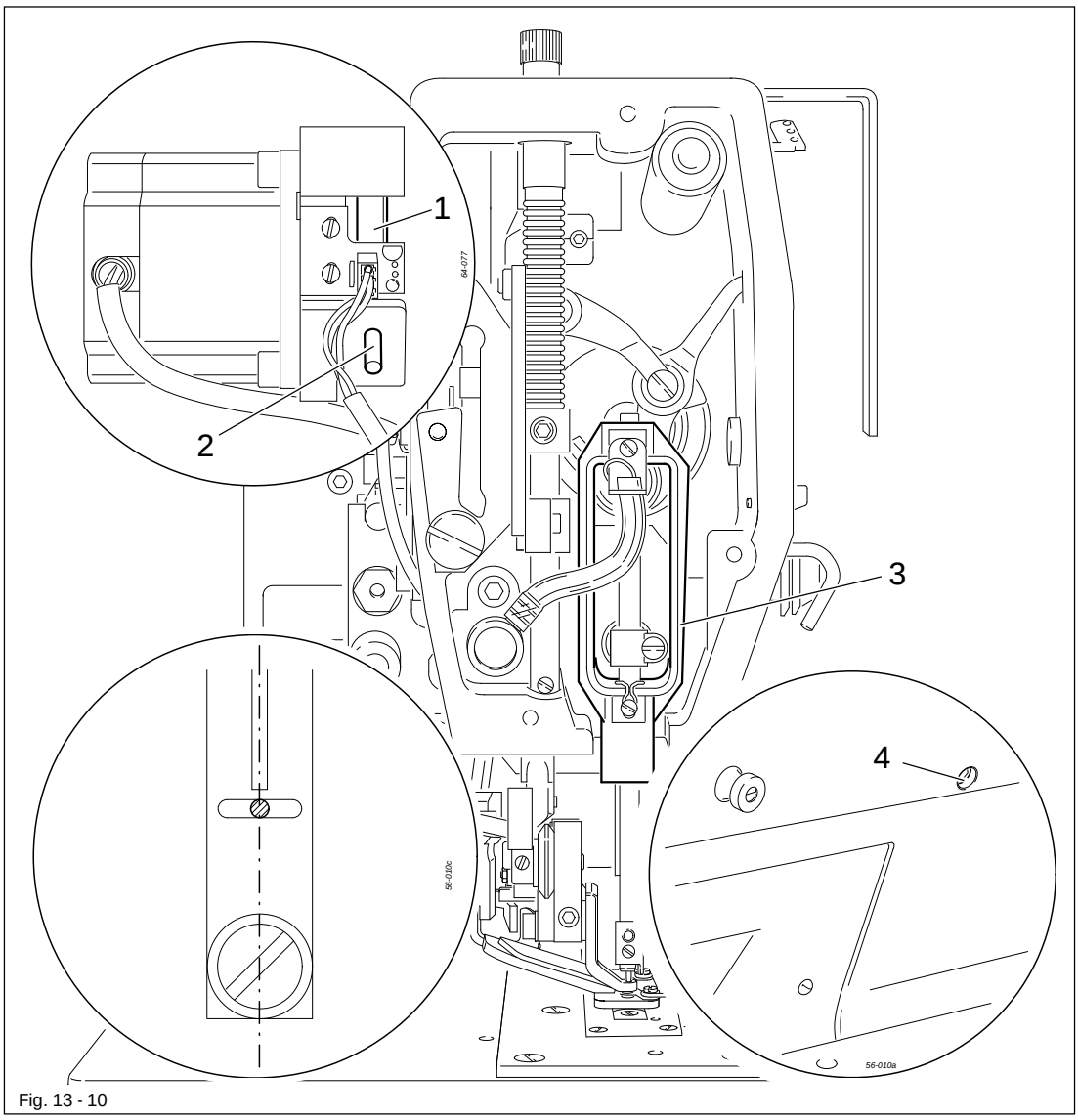

Fig. 13 - 10

- Switch on the machine and set parameter "610" to value "1".
- Using the balance wheel, bring the needle bar into b.d.c. and block eccentric 1 (blocking pin 2, part no. 13-030 272-05).
- Adjust the needle bar 3 (screw 4) in accordance with the requirement.
- Remove blocking pin 2.

13.15 Basic position of the work clamp (lengthwise to the arm)

Requirement
When the clamp 1 is in its basic position, there should be a distance of 5 mm, or 9 mm on machines with sub-class -2/62 and -2/63, from the centre of the needle hole to the work clamp.

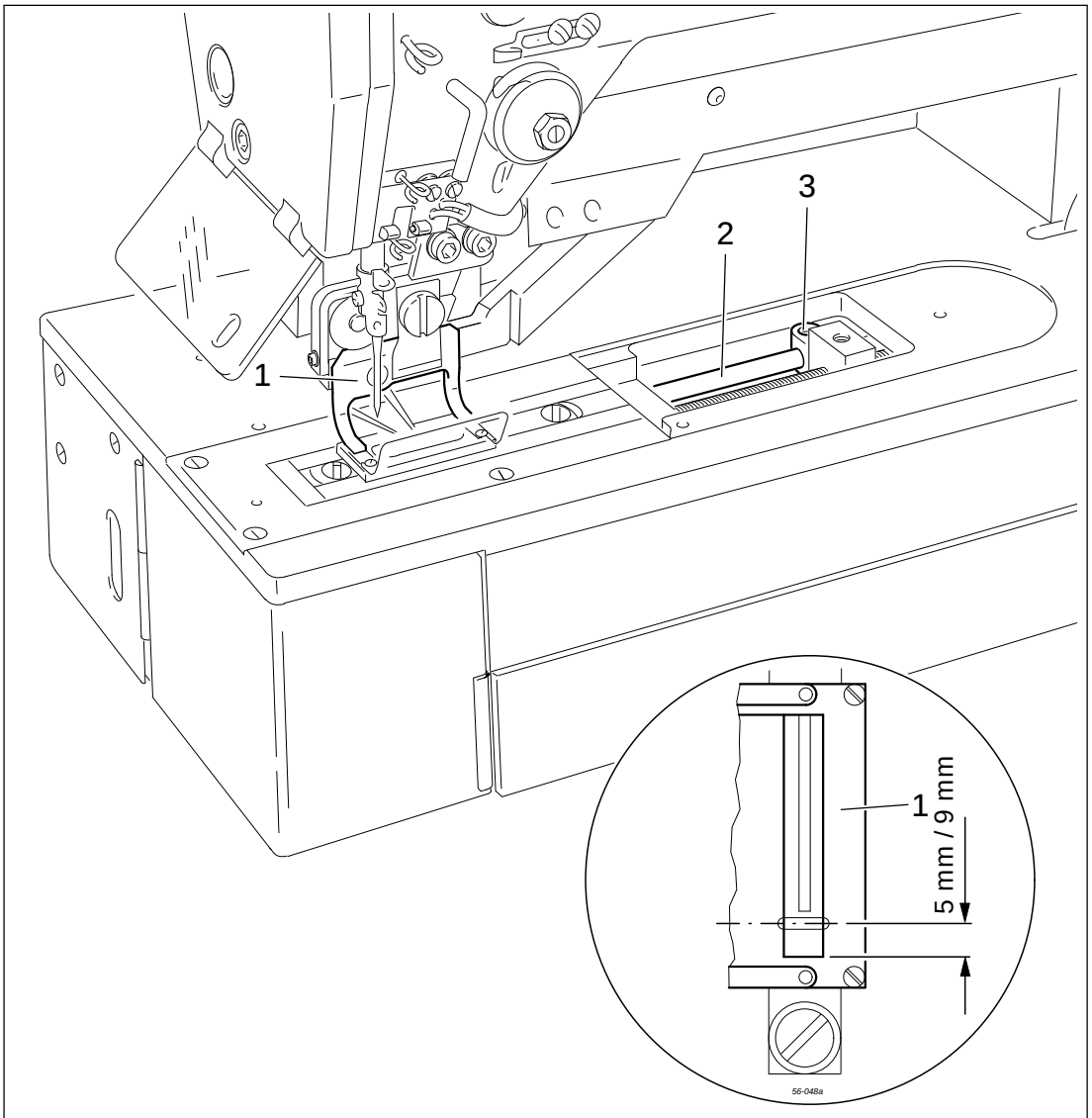

Fig. 13 - 11

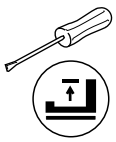

- Connect the compressed air system and switch on the machine.
- Lower the work clamp 1 (control panel).
- Adjust bar 2 (screw 3) according to the requirement.
- Switch off the machine and disconnect the compressed air.

13.16 Basic position of the work clamp (crosswise to the arm)

Requirement

1. When the pressure roller 1 is in guide unit 5, the cut-out of work clamp 6 should be centred to the needle hole.
2. When the work clamp 6 is in motion, it should always be parallel to the needle plate insert.

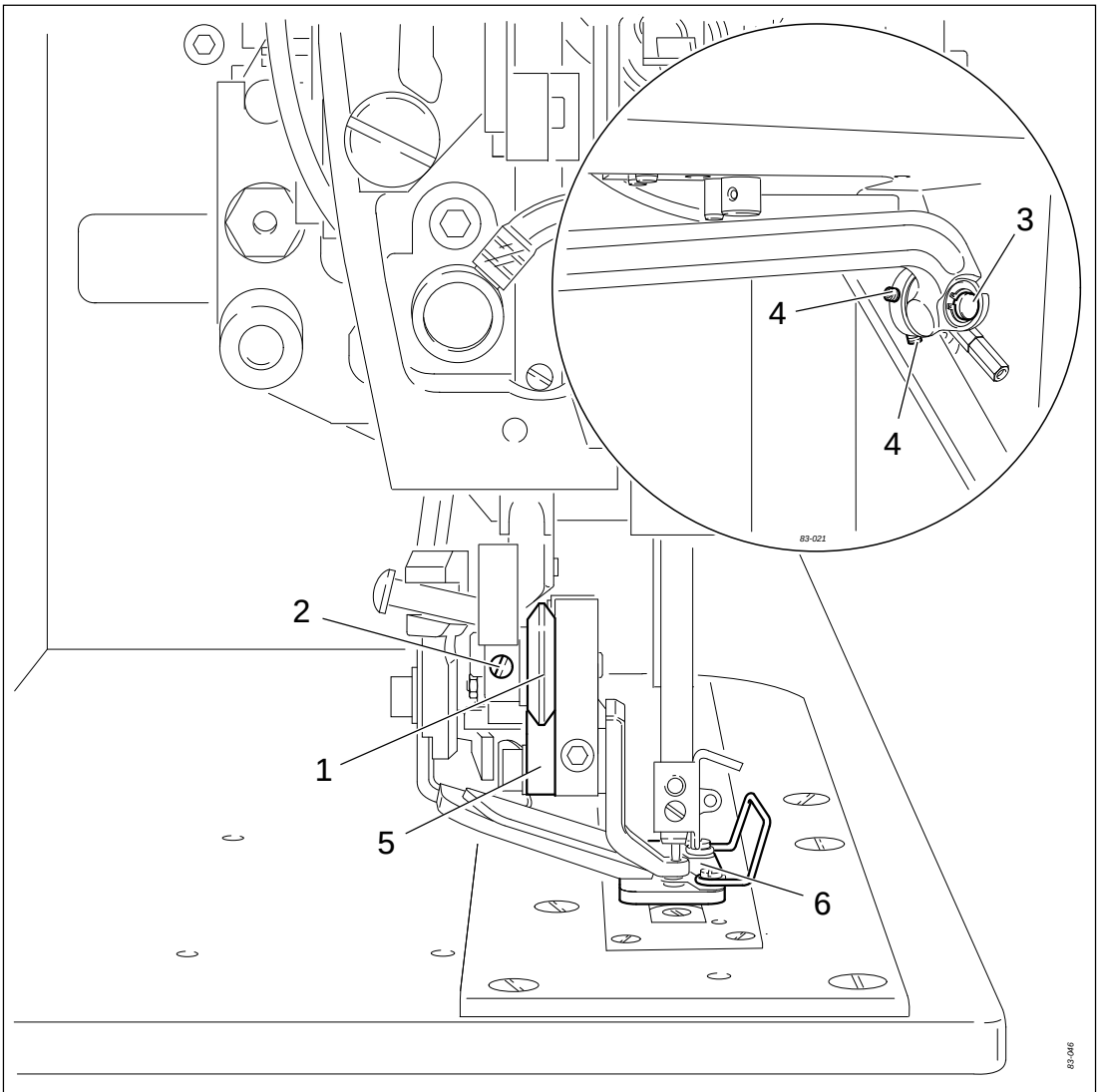

Fig. 13 - 12

- Reduce the sewing pressure completely, see Chapter 9.09 Adjusting the work clamp pressure.
- Adjust pressure roller 1 (screw 2) according to requirement 1.
- Adjust bolt 3 (screws 4) according to requirement 2.

13.17 Upper take-up lever position (reference position)

Requirement
The take-up lever should position 1.8 - 2.0 mm before its t.d.c. and one of the screws 1 should be accessible.

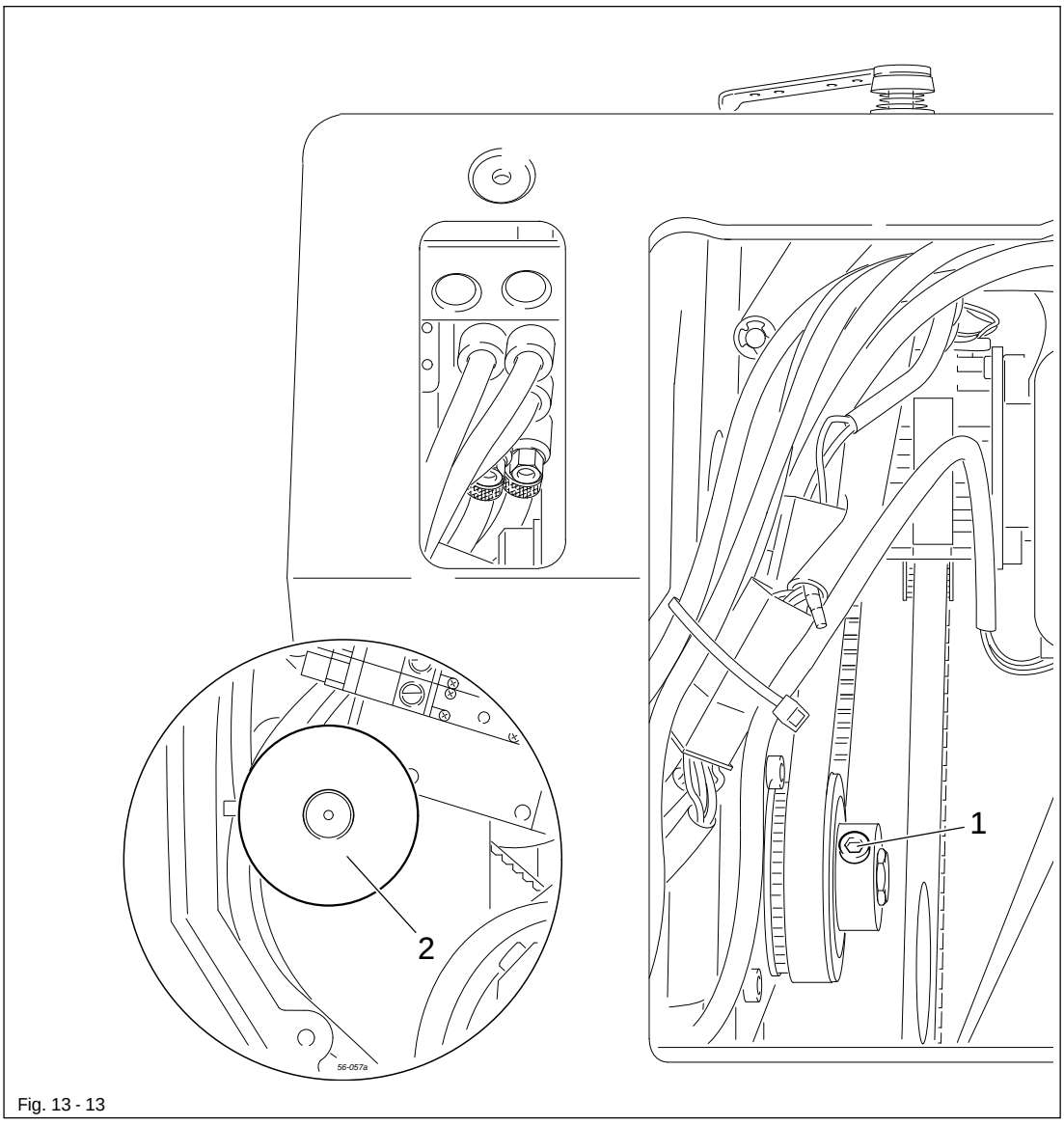

Fig. 13 - 13

- Remove the needle and switch on the machine.
- Select parameter "609".

- Call up the "Enter" function with the corresponding plus/minus key. The motor turns to the reference point.

- Loosen screw 1 and, by turning the balance wheel 2, bring the take-up lever into position according to the requirement.
- Tighten screws 1.
- Switch off the machine.

13.18 Lifting elbow on the work clamp

Requirement

1. The lifting elbow 1 should be parallel to pressure roller 3.
2. When work clamp 4 is lifted, there should be a slight amount of play between pressure roller 3 and lifting elbow 1.

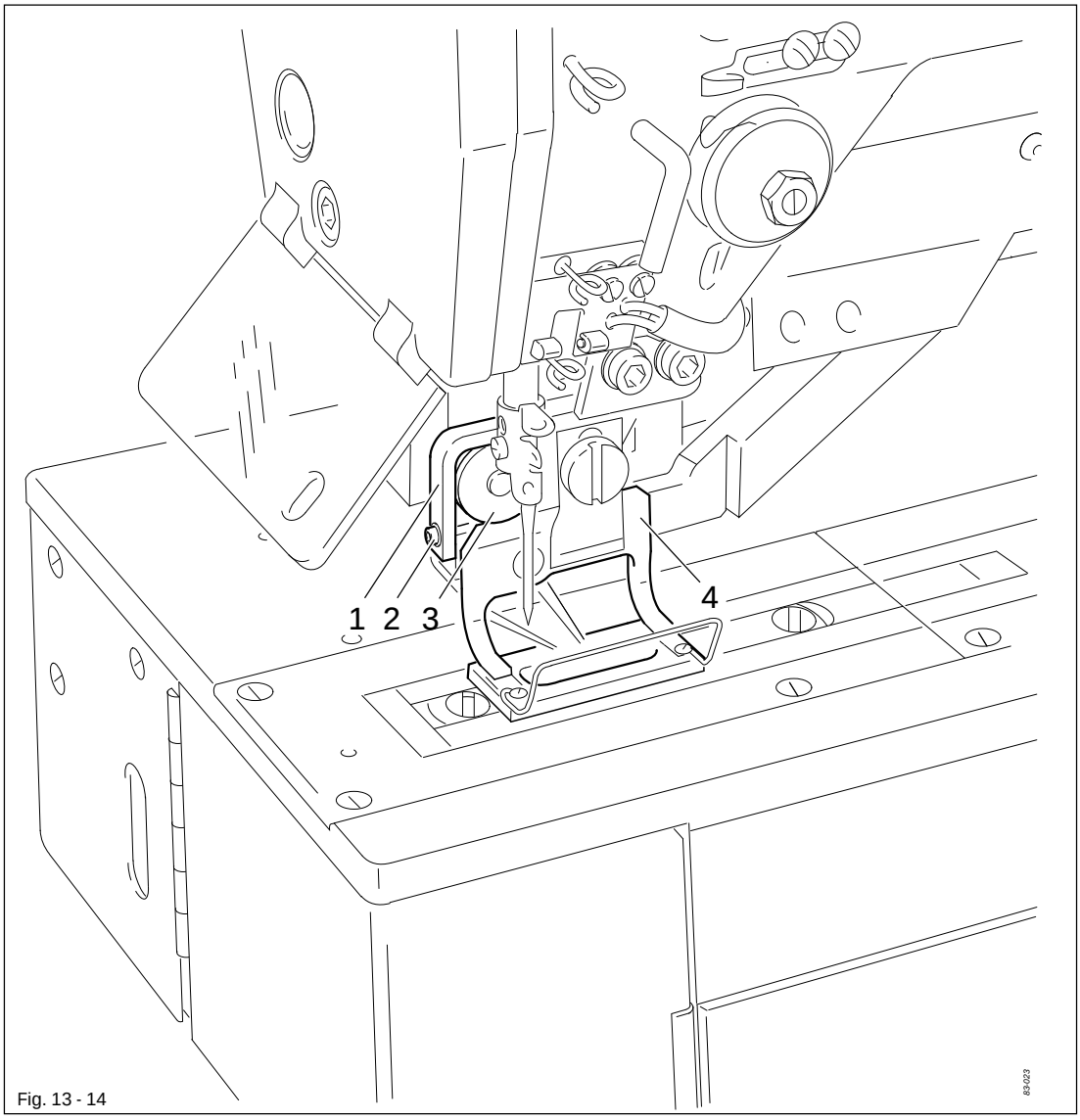

Fig. 13 - 14

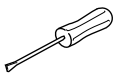

- Switch on the machine.



- Lower the work clamp.
- Adjust the lifting elbow 1 (screw 2) according to the requirements.
- Switch off the machine.

13.19 Work clamp stroke

Requirement
When the lifting cylinder is completely extended, there should be a space of 15 mm between lifting piece 4 and clamp 1.

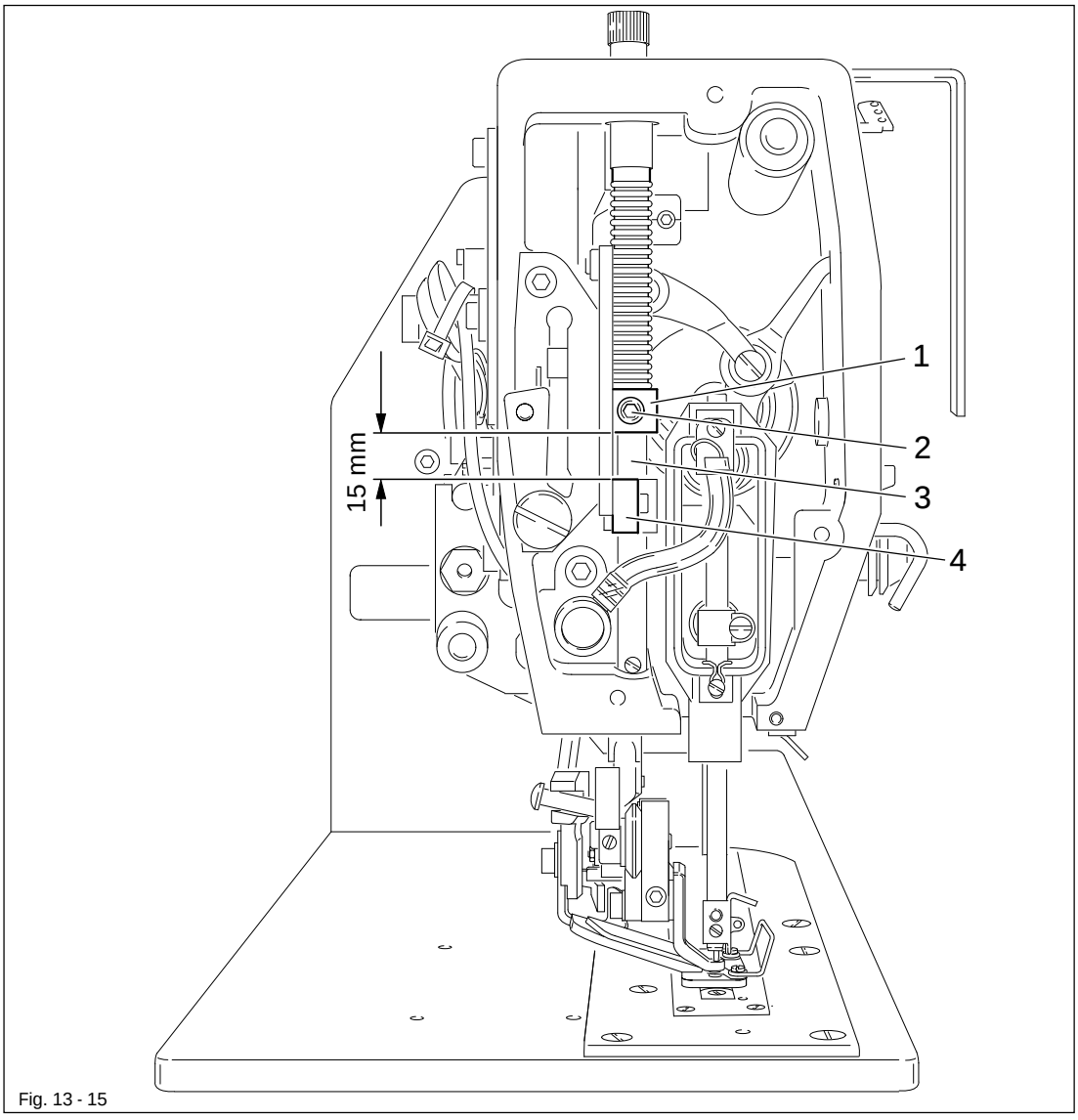

Fig. 13 - 15

- Reduce the work clamp pressure completely, see Chapter 9.09 Adjusting the work clamp pressure.
- Adjust clamp 1 (screw 2) according to the requirement.

Take care not to twist bar 3 during the adjustment!

13.20 Lifting cylinder of the work clamp

Requirement
The lifting and dropping motion of the work clamp should be carried out as quickly as possible.

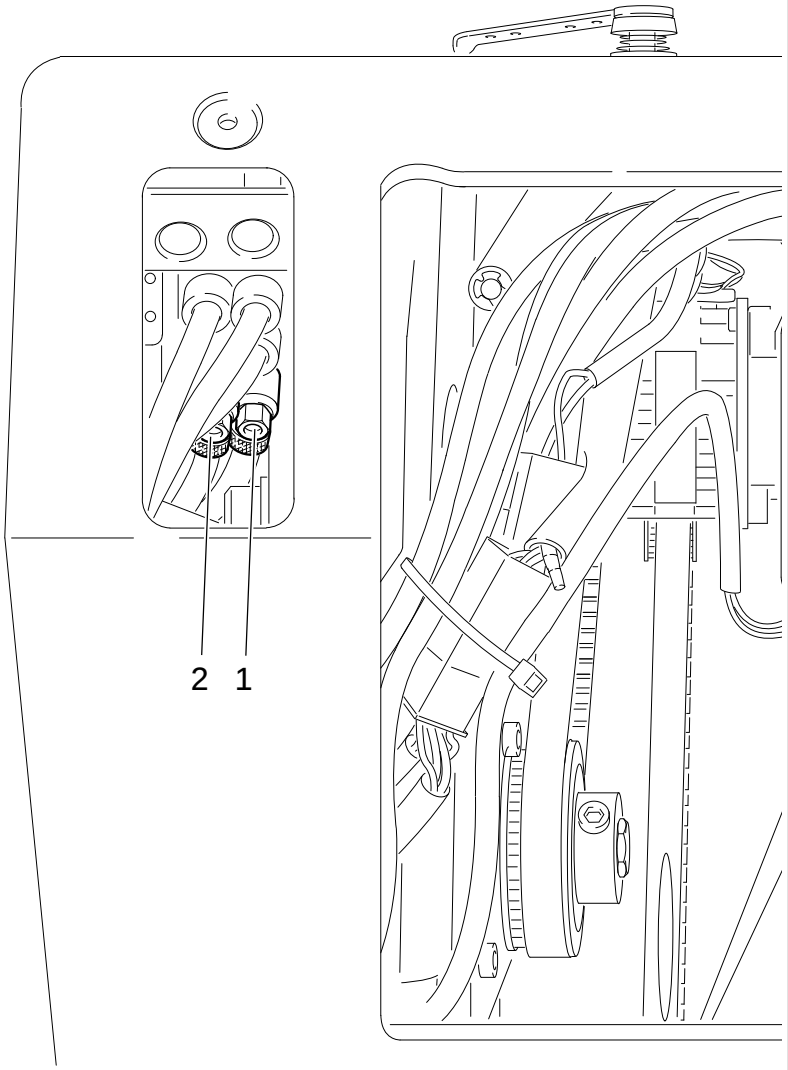

Fig. 13 - 16

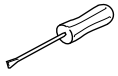

- Adjust the throttles 1 (dropping motion) and 2 (lifting motion) according to the requirement.

13.21 Cutting pressure of the knife unit (in dismantled state)

Requirement

1. In its basic position (retracted), the knife cylinder 1 should have a length of 98.5 mm.
2. The knife 5 should cut perfectly, but the pressure on knife 5 should be as low as possible.

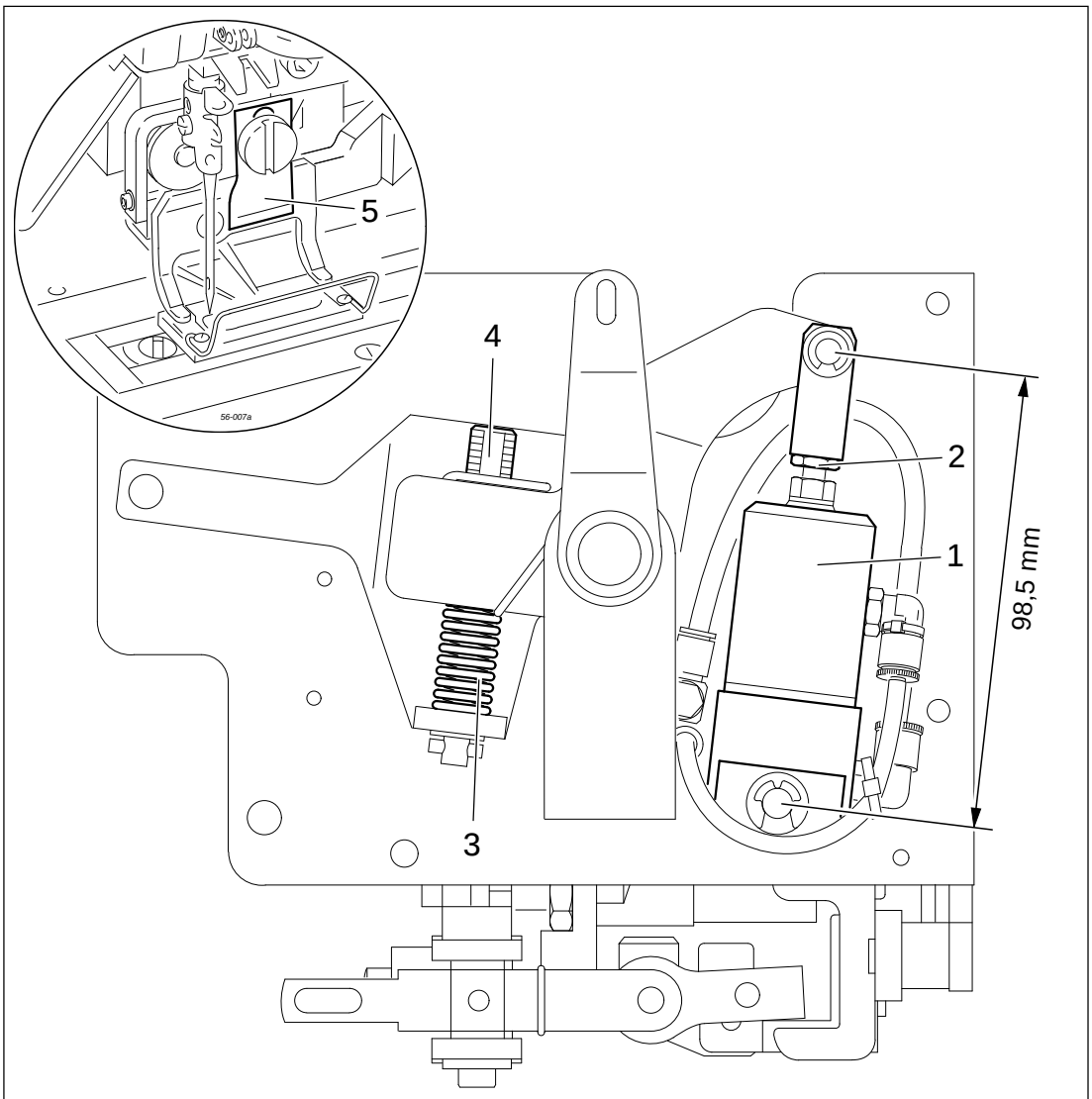

Fig. 13 - 17

- Adjust knife cylinder 1 (nut 2) according to requirement 1.
- To begin with, by turning screw 4 completely compress spring assembly 3, and then wind screw 4 back by three turns (requirement 2).

13.22 Position of the knife bracket and lower knife stop

Requirement

1. Knife bracket 5 should be adjusted so that adjustment gauge 2 is parallel and
2. in the centre of the knife slot.
3. When the knife cylinder is extended, screw 4 should be accessible through the hole in the machine case and adjustment gauge 2 should be touching the needle plate insert.

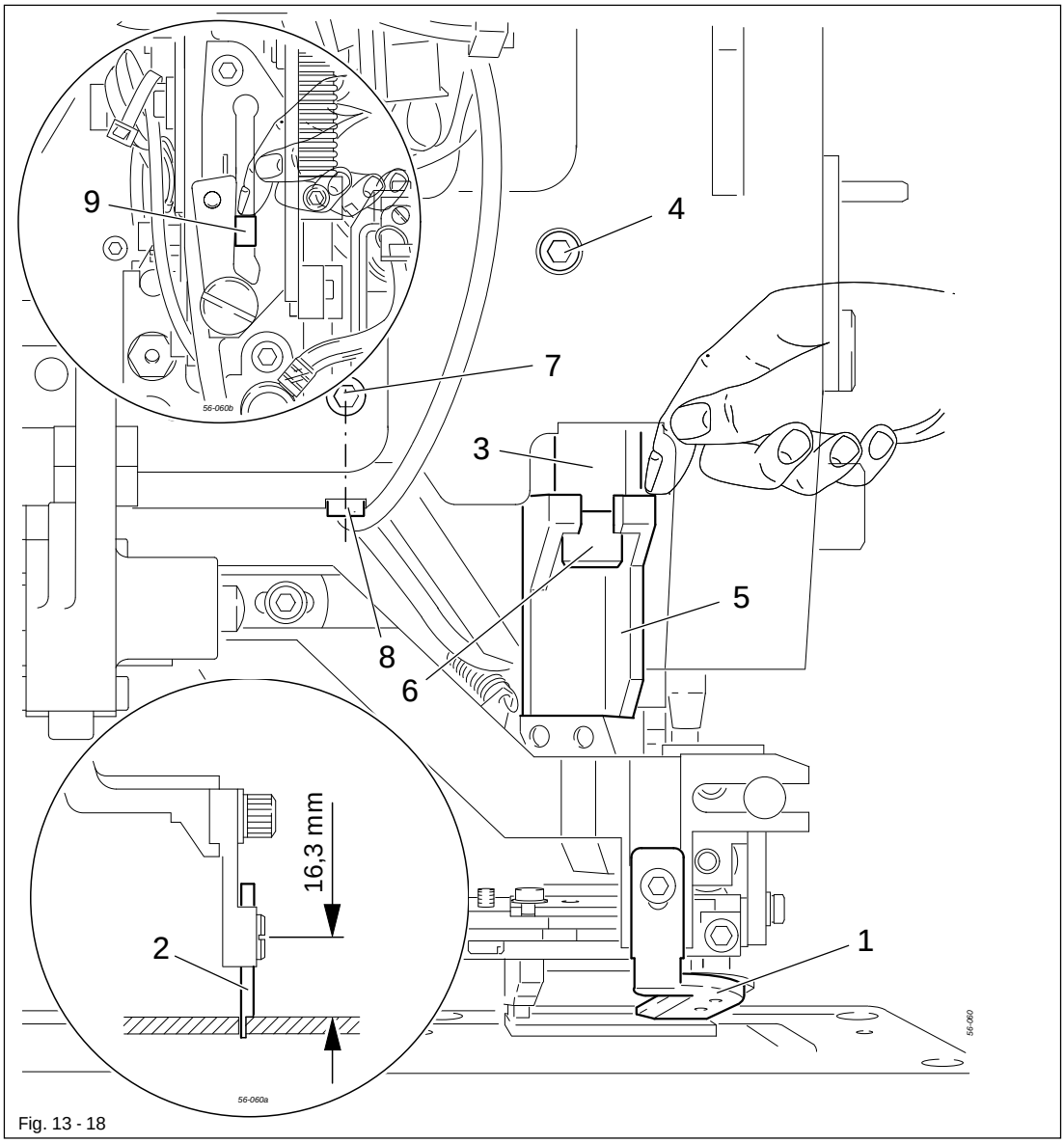

Fig. 13 - 18

- Bring the machine into its basic position and disengage needle thread cutter 1.
- Fit adjustment gauge 2 (Part no. 61-111 635-85).
- Twist knife bar 3 (screw 4) according to requirement 1.
- Adjust knife bracket 5 (screw 6) according to requirement 2.
- Loosen screw 7 and turn stop screw 8 back a few turns.
- Push down guide unit 9 by hand, until screw 4 becomes accessible through the hole in the machine case, and adjust knife bar 3 (screw 4) according to requirement 3.

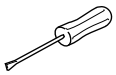

- Push down knife bar 3 by hand (the adjustment gauge 2 must be touching the needle plate insert) and turn stop screw 8 until it touches the knife arm.
- Tighten screw 7 and remove adjustment gauge 2.

13.23 Upper knife stop

Requirement
When the adjustment gauge 1 is resting on the needle plate insert, the arm of the knife should be touching the upper knife stop.

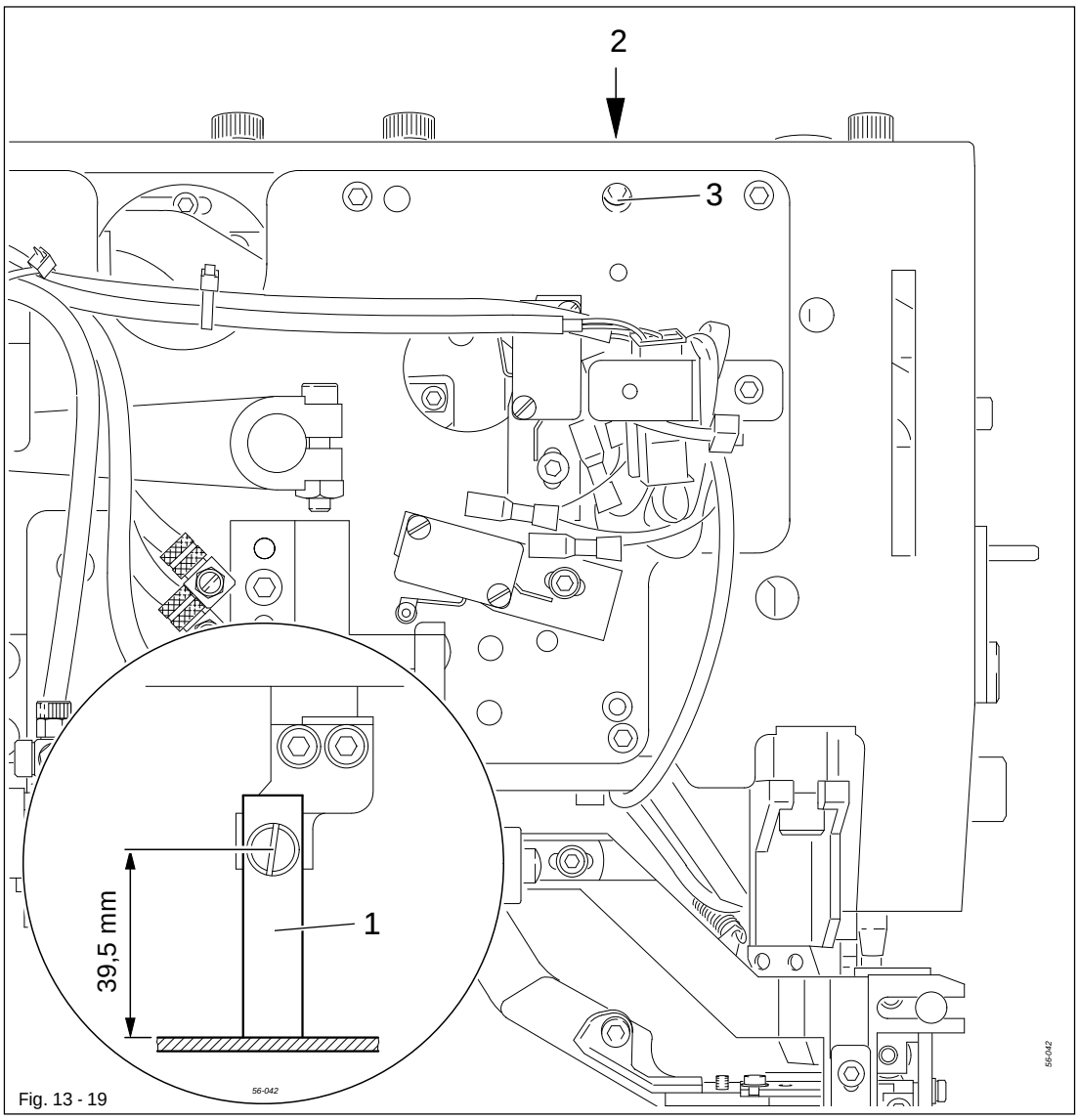

Fig. 13 - 19

- Fit adjustment gauge 1 (Part no. 61-11 635-93).
- Turn stop screw 2 (screw 3) according to the requirement.
- Remove adjustment gauge 1.

13.24 Knife control switch

Requirement
When the cutting device is in its neutral position, switch 1 should be reliably activated.

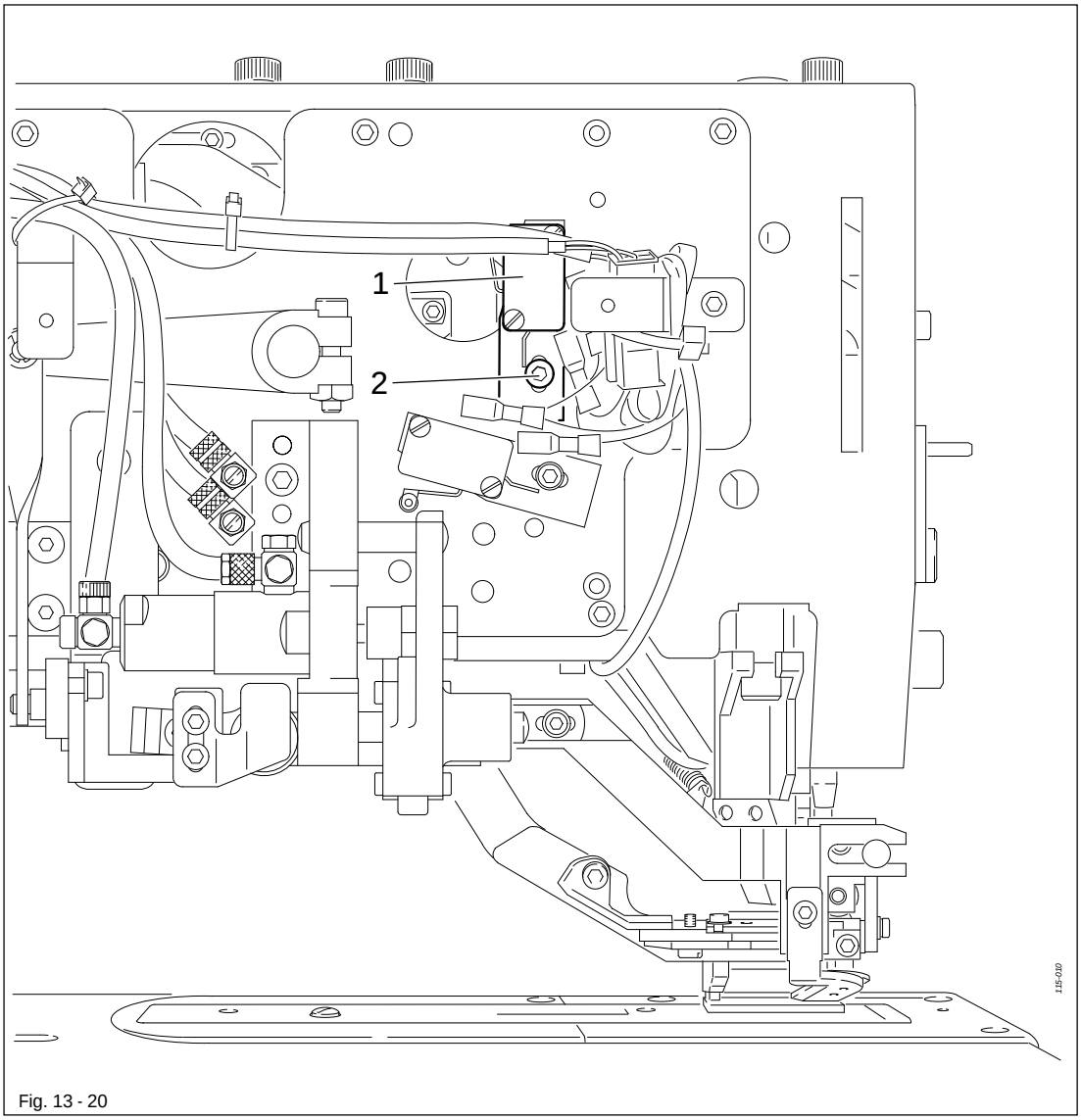

Fig. 13 - 20

- Adjust switch 1 (screw 2) according to the requirement.

13.25 Knife motion

Requirement

1. The fabric must be cut perfectly.
2. The cutting motion should be carried out as quickly as possible.

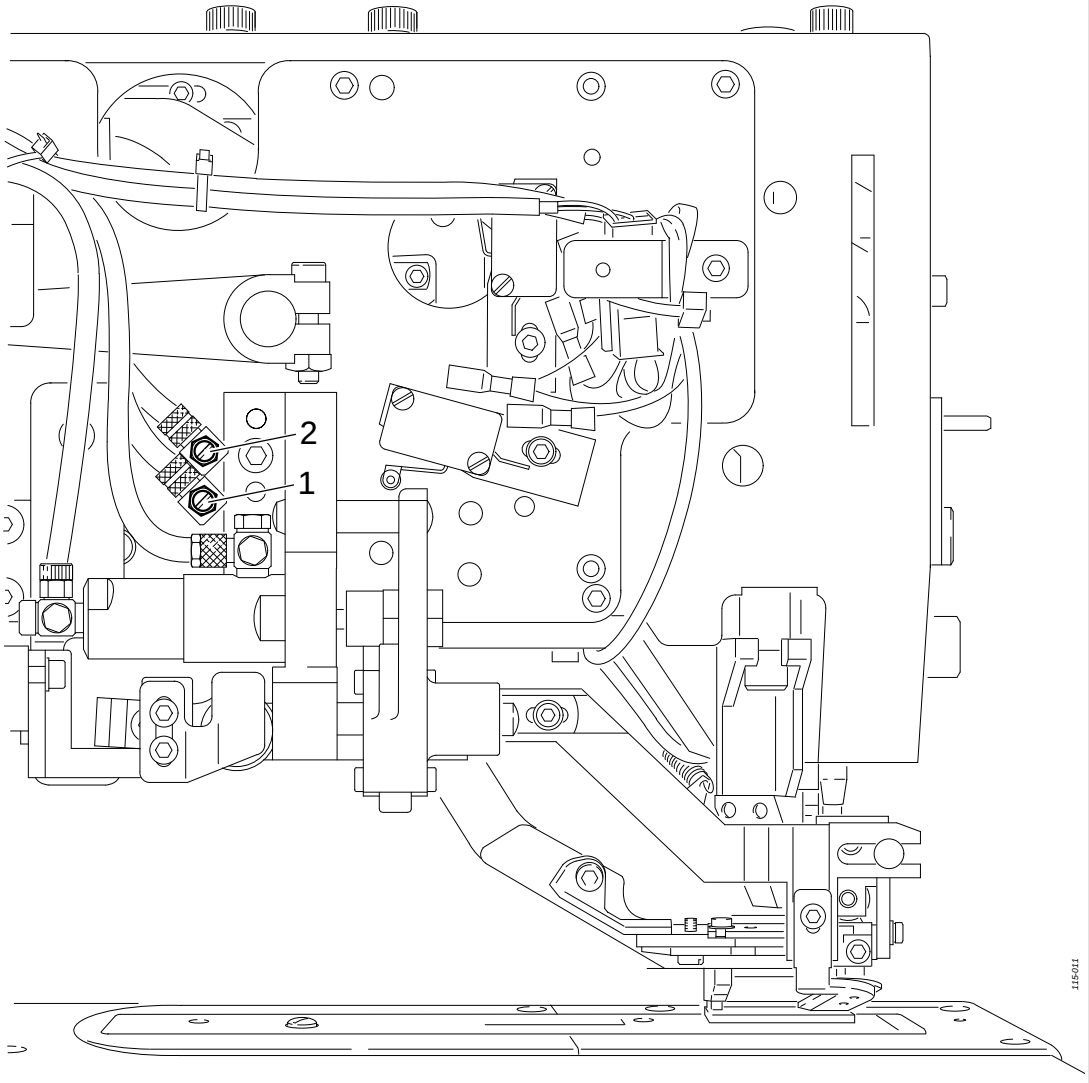

Fig. 13 - 21

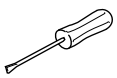

- Adjust the throttles 1 (dropping motion) and 2 (lifting motion) according to the requirements.

13.26 Distance of the knife to the needle bar

Requirement
There should be a distance of 0.2 - 0.5 mm between the knife 3 and the needle bar 4.

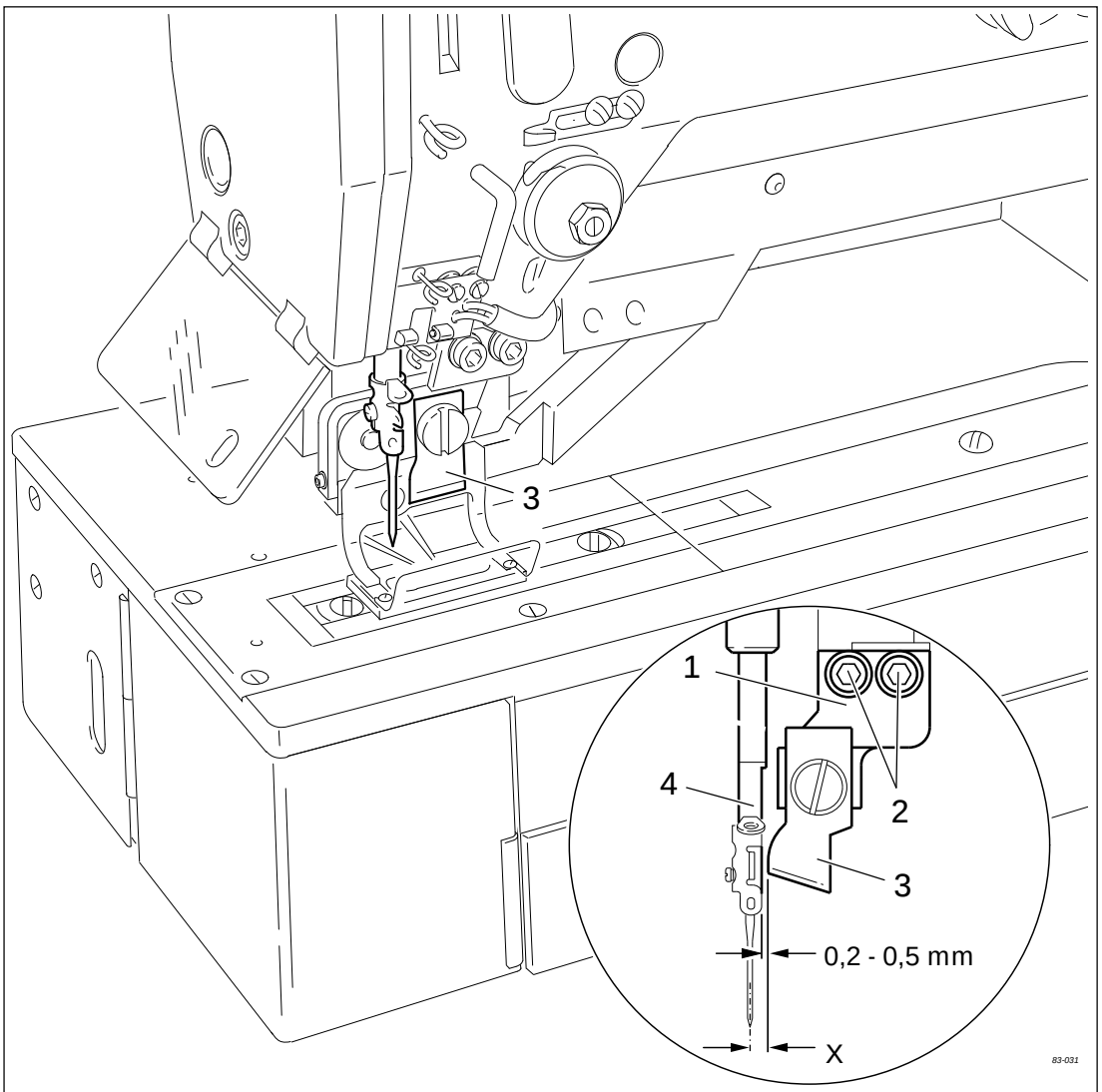

Fig. 13 - 22

- Adjust knife holder 1 (screws 2) according to the requirement.
- Remove compressed air supply.
- Push the knife holder down by hand and check the distance of the knife from the needle plate cutout.

After setting the distance between the knife and the needle bar, the setting value of parameter "210" should be adapted to the measurement "x".

13.27 Changing the knife / knife height

Requirement
When the punching or cutting device is in its neutral position, knife 2 should be 23 mm (punching device) or 22 mm (cutting device) away from needle plate 6.

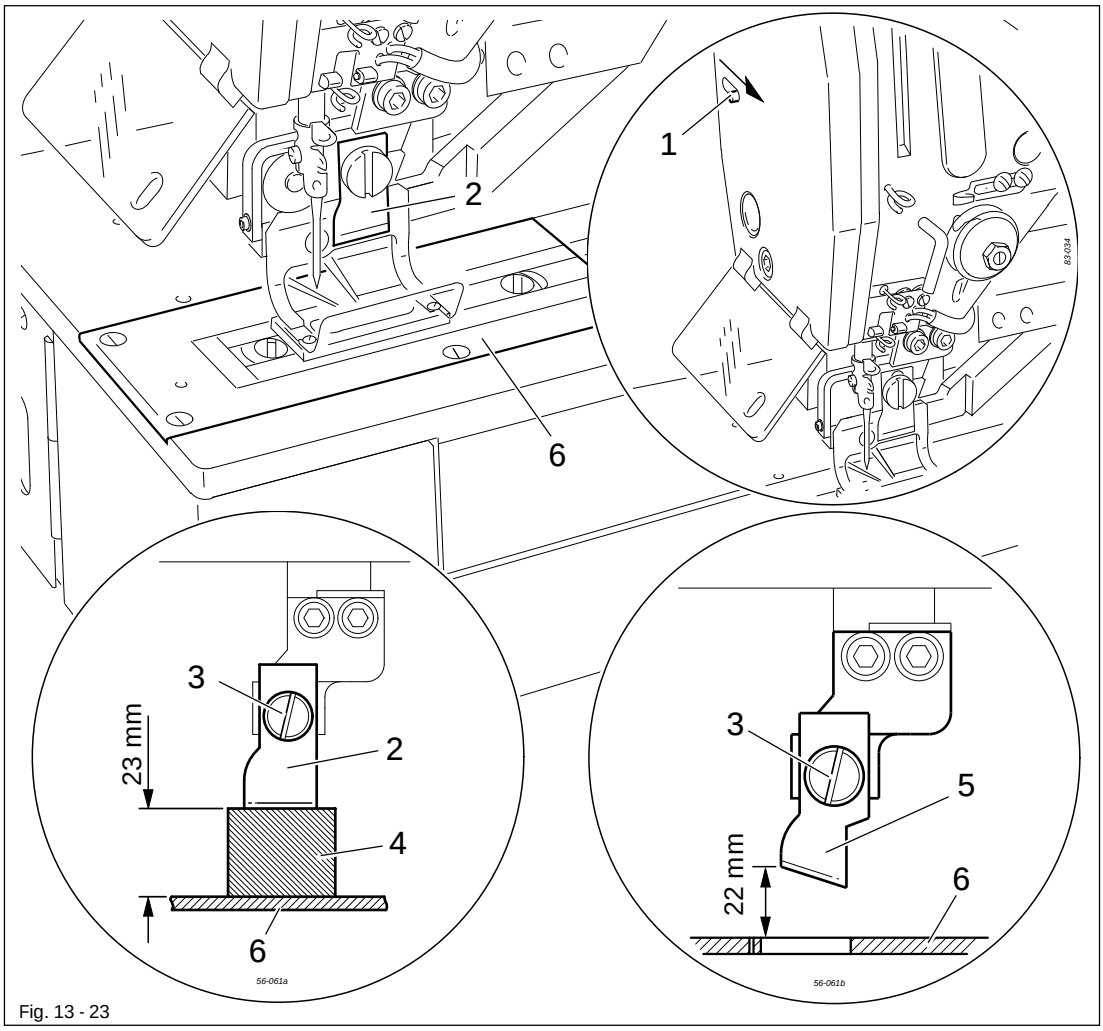

Fig. 13 - 23

Danger of injury from dropping knife!
Activate knife lock (move lever 1 in the direction of the arrow).

Changing the knife:

- Remove and replace knife 2 (screw 3).
- Check the knife length entered and adjust it if necessary, see Chapter 10.01.03 Entering the knife length and cut overlap.
- Set the knife height as described below.

Knife height on machines with punching device:

- Adjust knife 2 (screw 3) according to the requirement with the aid of adjustment gauge 4 (Part no. 61-111 635-86).

Knife height on machines with cutting device:

- Adjust knife 5 (screw 3) according to the requirement.

13.28 Functional test of needle thread cutter

Requirement
1. An inserted thread should be cut cleanly by needle thread cutter 1.
2. After cutting, the thread end should be clamped in such a way that the needle thread cutter 1 is held on the thread.

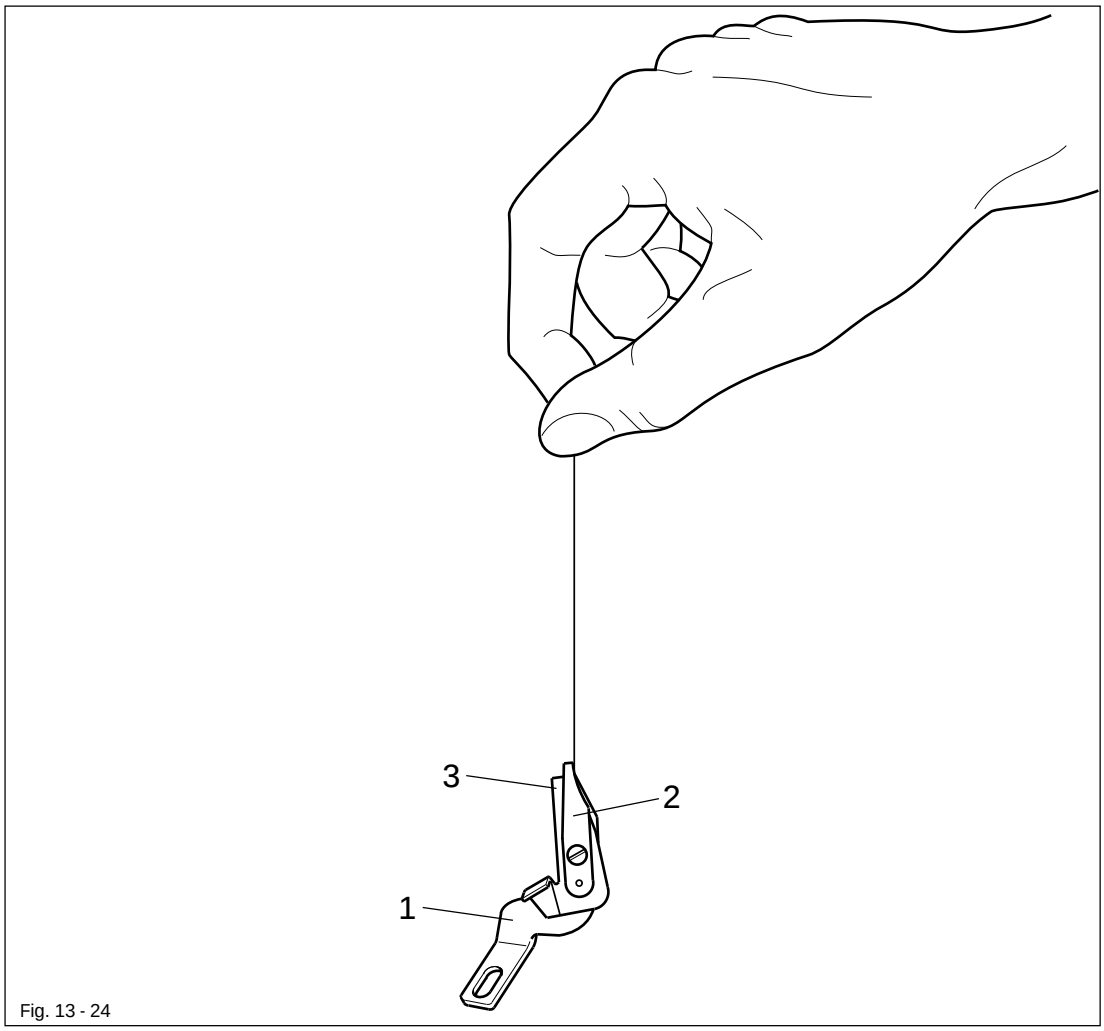

Fig. 13 - 24

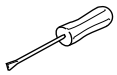

- Dismount needle thread cutter 1.
- Carry out a functional test according to the requirements.
- If necessary, adjust clamp spring 2 or roughen the clamping surfaces.
- Fit the needle thread cutter 1.

If the thread is damaged during clamping, the clamp hold is too tight. There should be no sharp edges on the clamping surfaces of the top cutter section 3, but this must have an adequate clamping surface.
Smooth clamping surfaces have a negative effect on the clamping action.

13.29 Needle thread cutter (vertical and horizontal adjustment)

Requirement

1. The distance between the lower edge of the needle thread cutter 1 and the work clamp 5 must be 0.5 mm.
2. The opened needle thread cutter 1 should catch the needle thread reliably. During sewing the opening cutter must not collide with the needle.

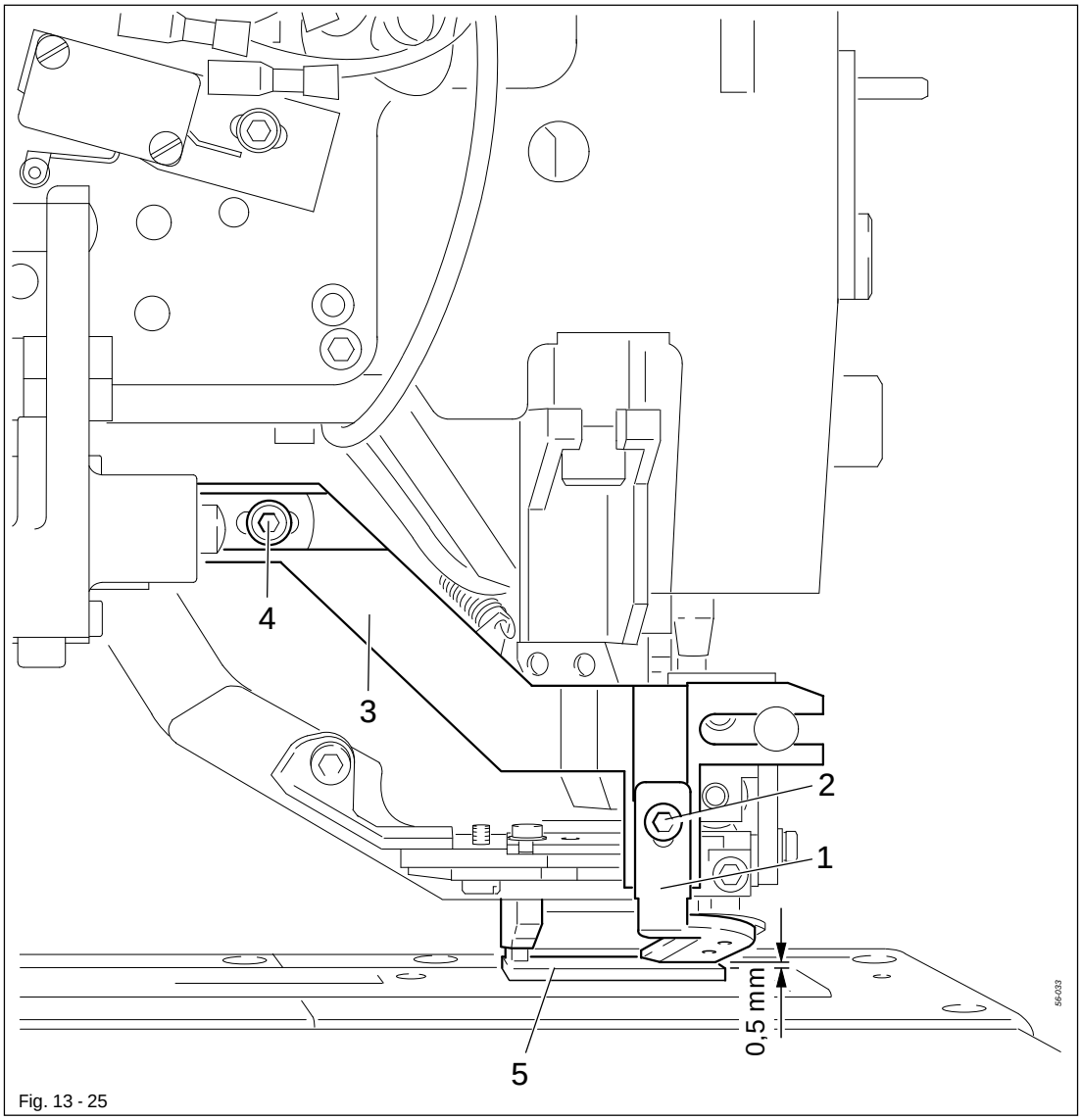

Fig. 13 - 25

- Adjust the needle thread cutter 1 (screw 2) according to requirement 1.
- Adjust clamp 3 (screw 4) according to requirement 2.

The adjustment described in requirement 2 cannot be carried out when sewing extremely thick materials, as this may cause needle breakage.

13.30 Cam guide unit

Requirement
The starting thread should be sewn over with no problem.

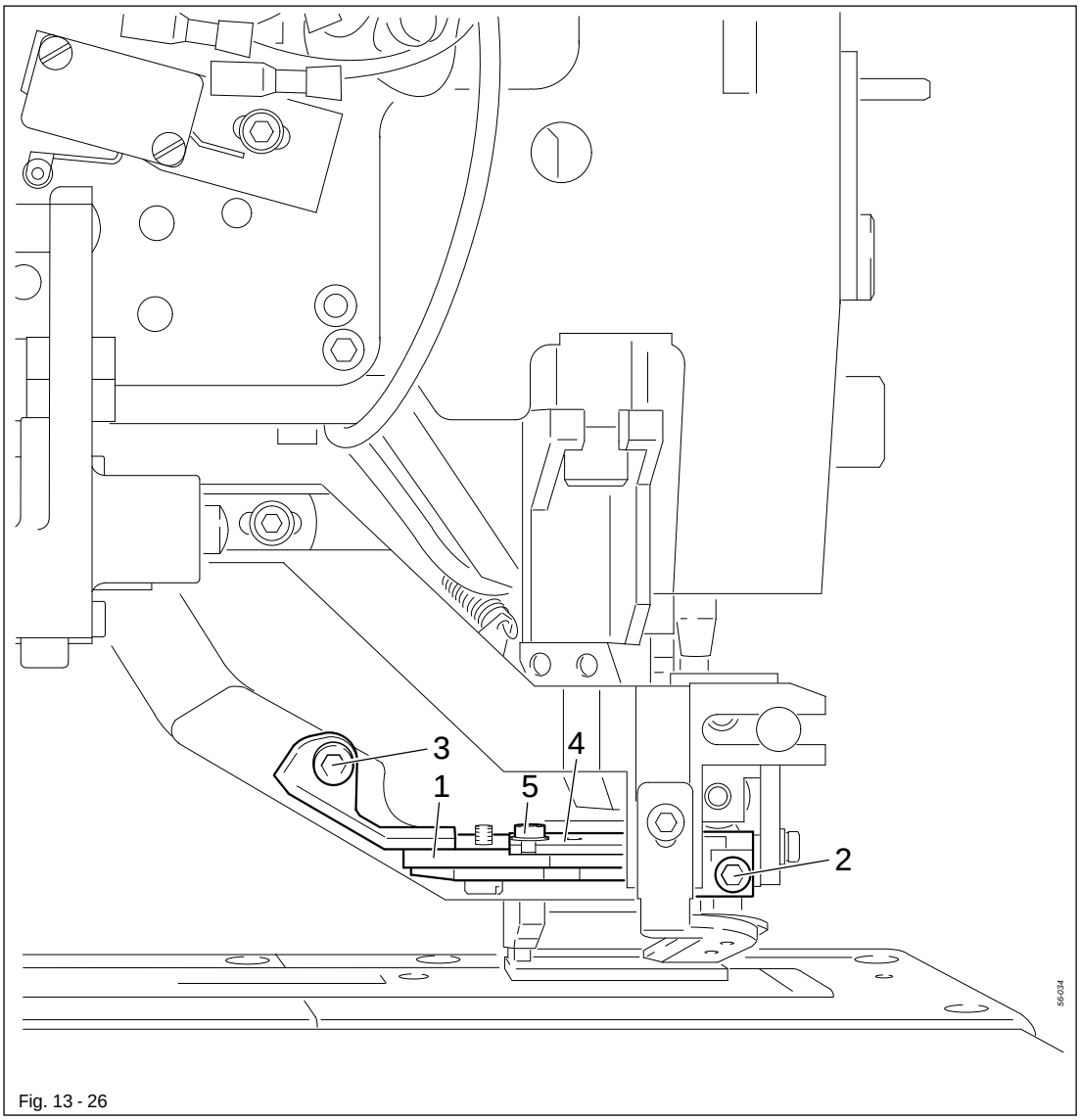

Fig. 13 - 26

- Bring the machine into its basic position and retract the cutter cylinder completely.
- Adjust the cam guide unit 1 (screws 2 and 3) according to the requirement.
- Adjust drive plate 4 (screw 5) according to the requirement.

The opening and swinging out of the needle thread cutter must be corrected during sewing, if necessary.

13.31 Needle thread cutter stroke

Requirement
The stroke length between the extended and retracted cutter cylinder 3 should be 4.5 mm.

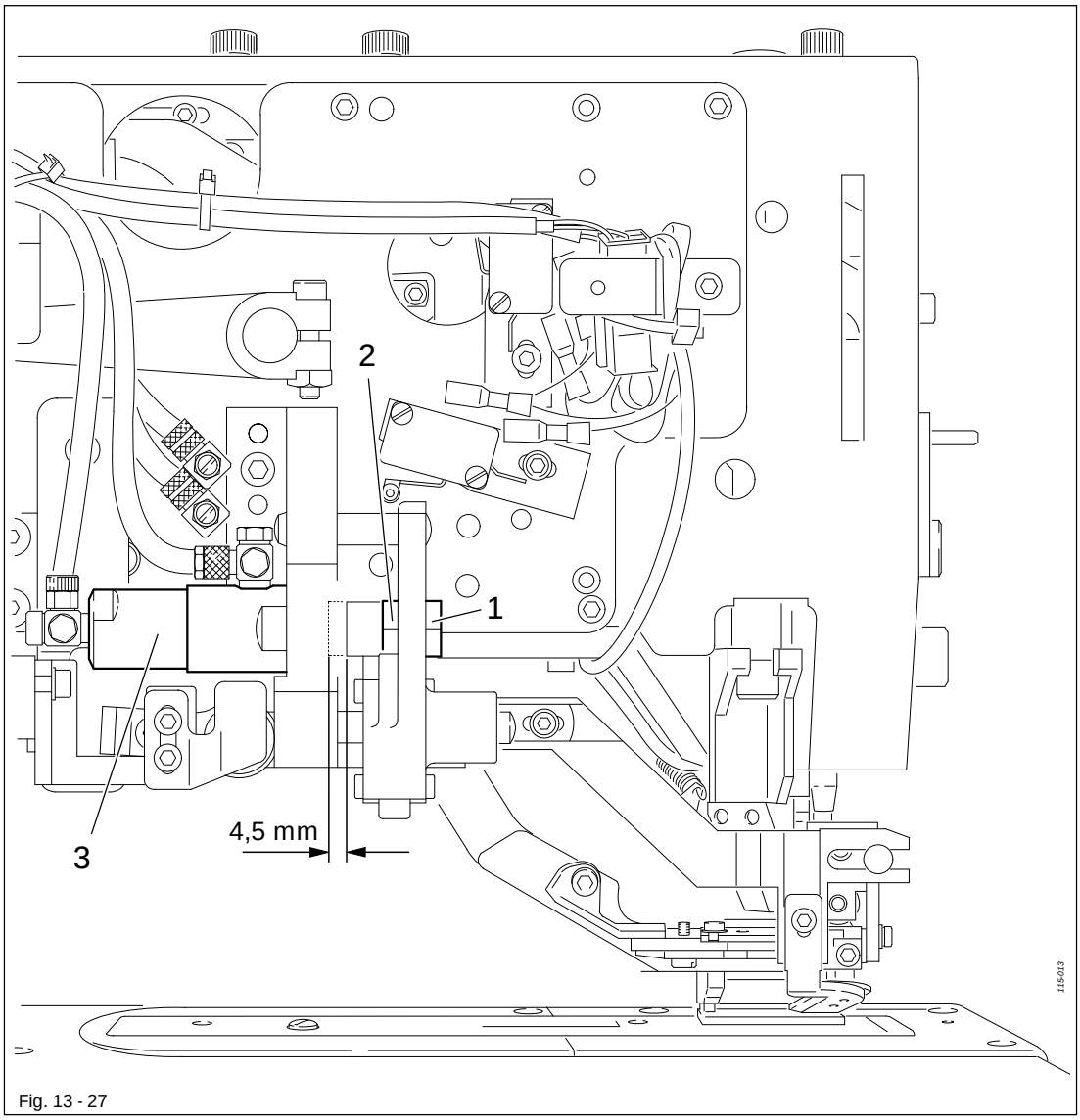

Fig. 13 - 27

- Adjust nut 1 (locking nut 2) according to the requirement.

13.32 Needle thread cutter switch

Requirement
When the cutter cylinder 3 is retracted, switch 1 should be reliably activated.

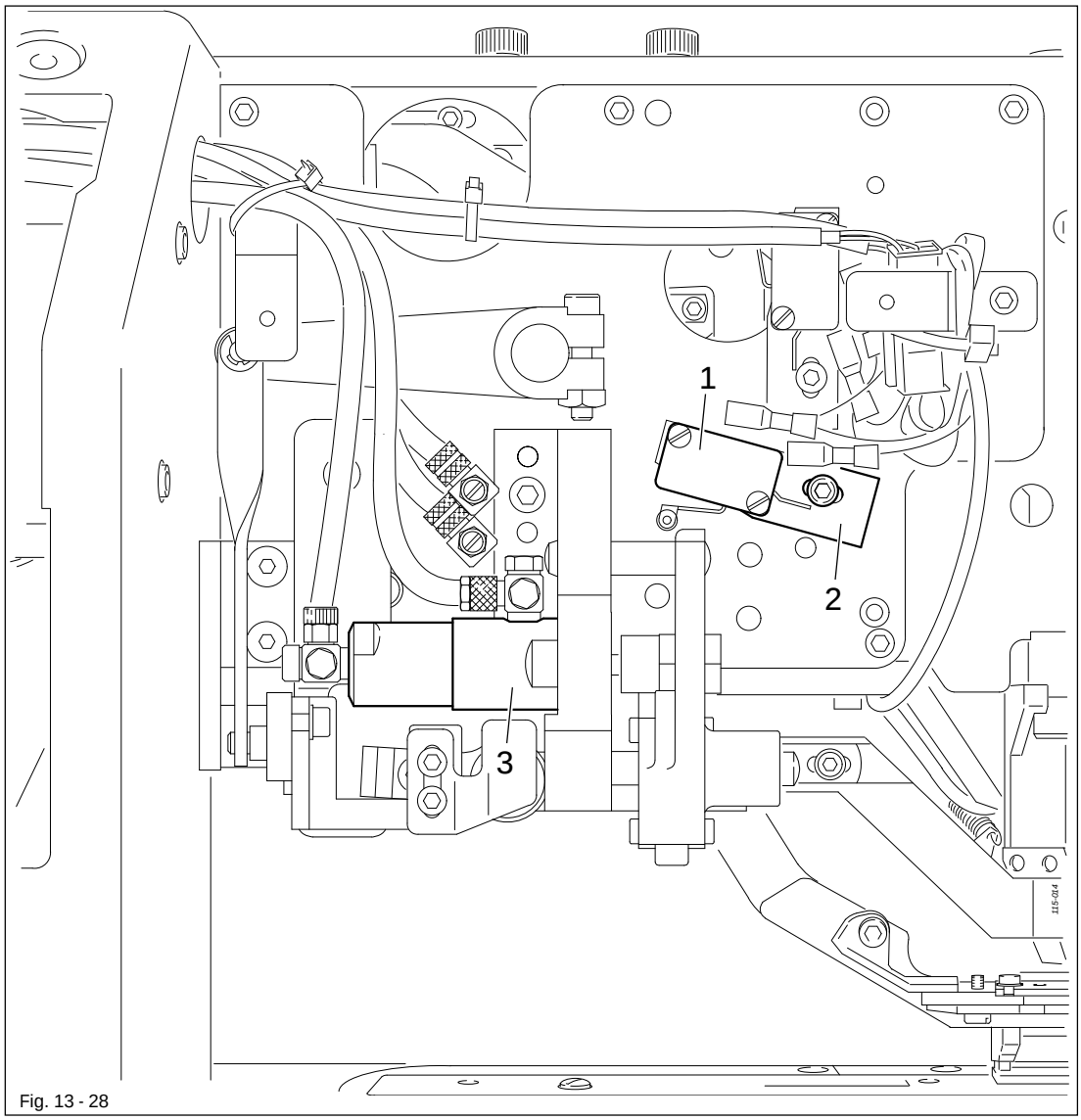

Fig. 13 - 28

- Adjust switch 1 (screw 2) according to the requirement.

13.33 Needle thread cutter release

Requirement
1. Adjustment hole 6 must match the hole in the mounting plate 7.
2. There should be a distance of approximately 1 mm between the lower edge of pawl 5 and the upper edge of catch 8. (The thread should not be cut until the needle thread tension is open.)

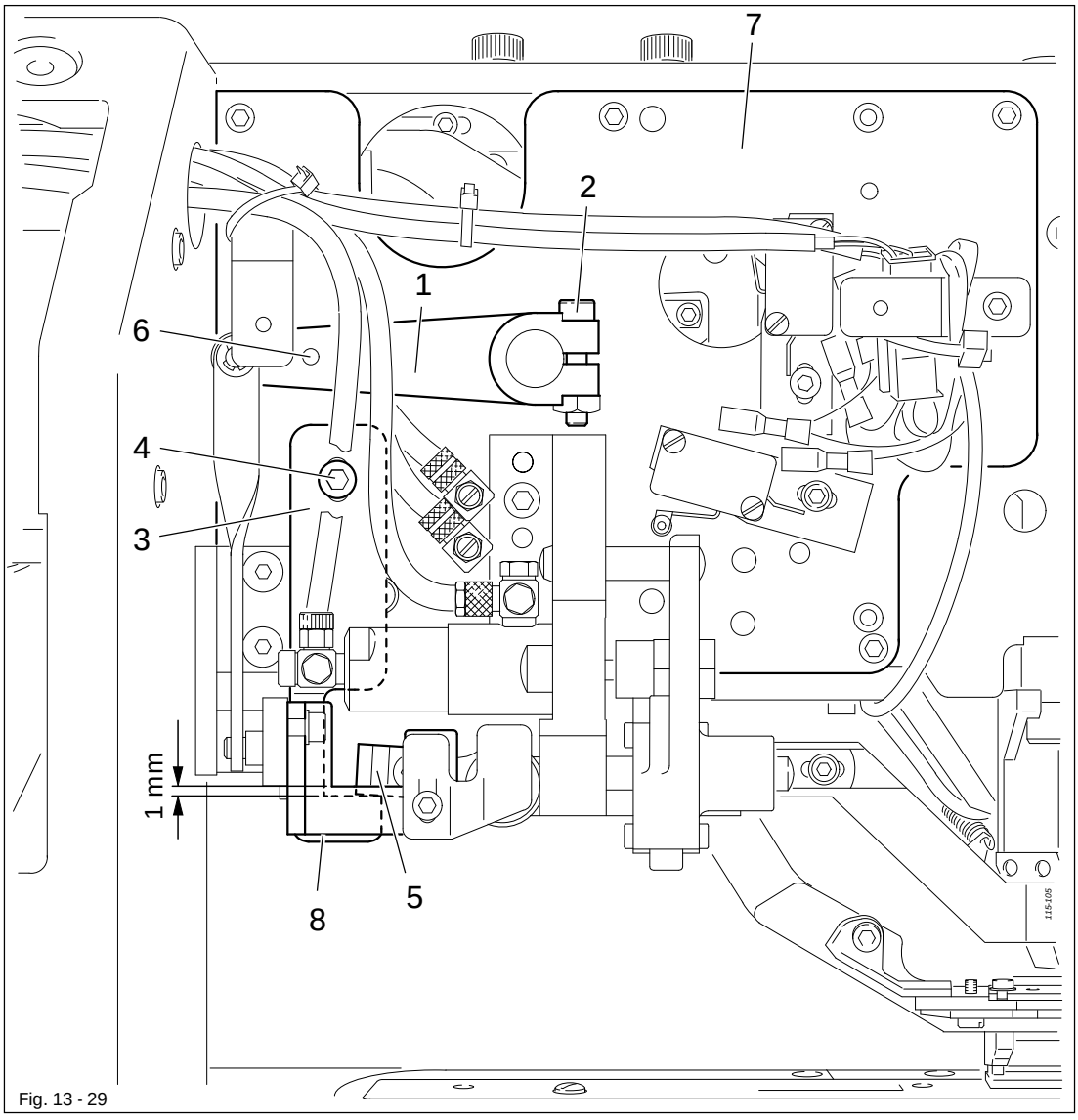

Fig. 13 - 29

- Adjust lever 1 (screw 2) according to requirement 1 with the aid of the adjustment pin (Part no. 61-111 641-46).
- Disengage the needle thread cutter by hand.
- Adjust bar 3 (screw 4) according to requirement 2.
- Raise pawl 5 until the needle thread cutter is engaged.

13.34 Catch

Requirement
When the cutter frame 1 is at the highest point of the cam guide unit 2, there should be a space of 0.2 mm between catch 3 and pawl 6.

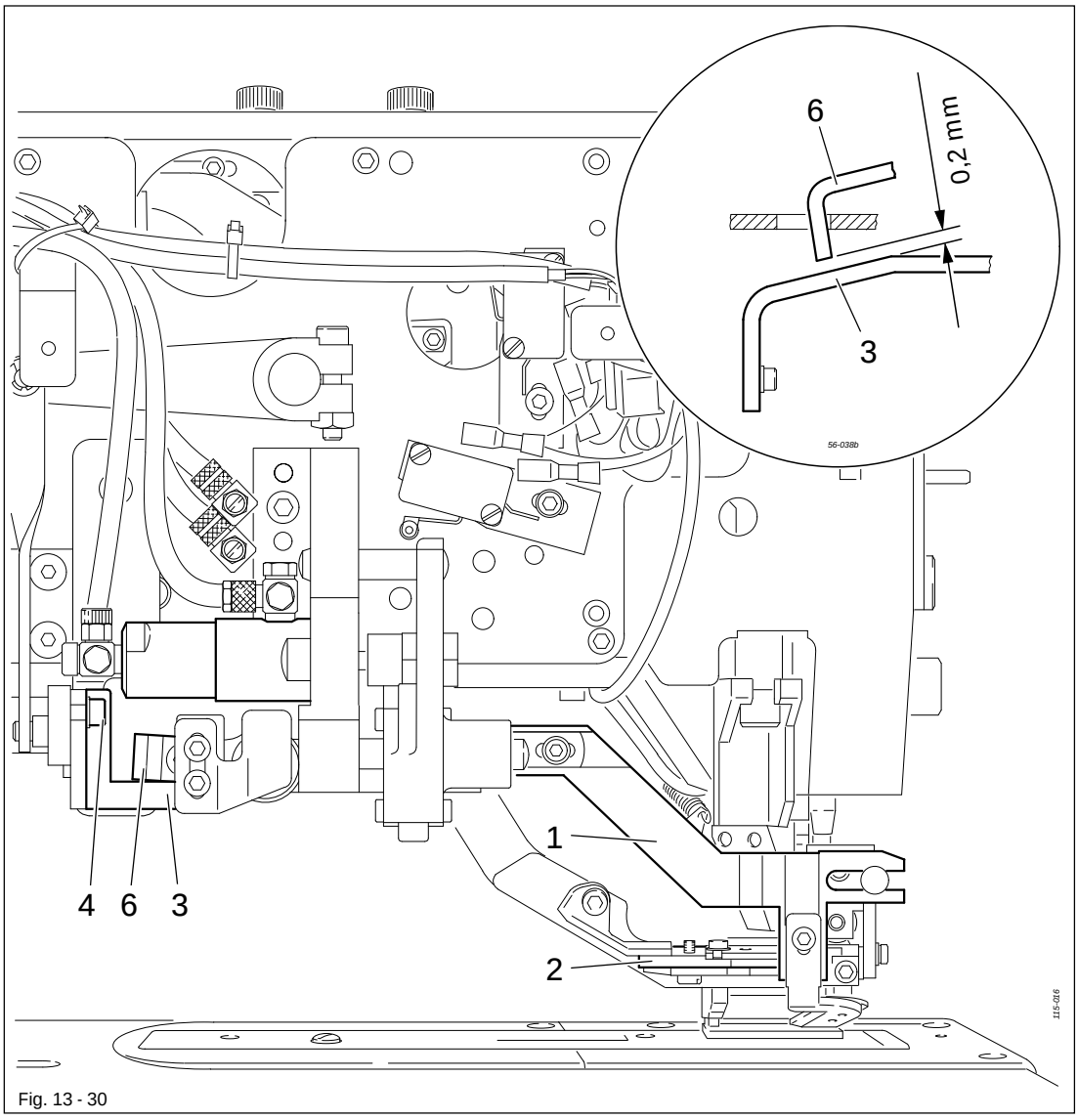

Fig. 13 - 30

- Connect the machine to the compressed air system and switch on the machine.
- Tact through the seam until the cutter frame 1 is at the highest point of the cam guide unit 2.
- Adjust catch 3 (screw 4) according to the requirement.
- Move the machine further until reaching the basic position.
- Switch off the on/off switch and disconnect the machine from the compressed air system.

13.35 Swing out motion of the needle thread cutter

Requirement

1. Before the swing out motion begins, the needle thread cutter 4 should have clamped and cut the thread reliably.
2. When the needle thread cutter 4 swings out, it should not touch the needle point.

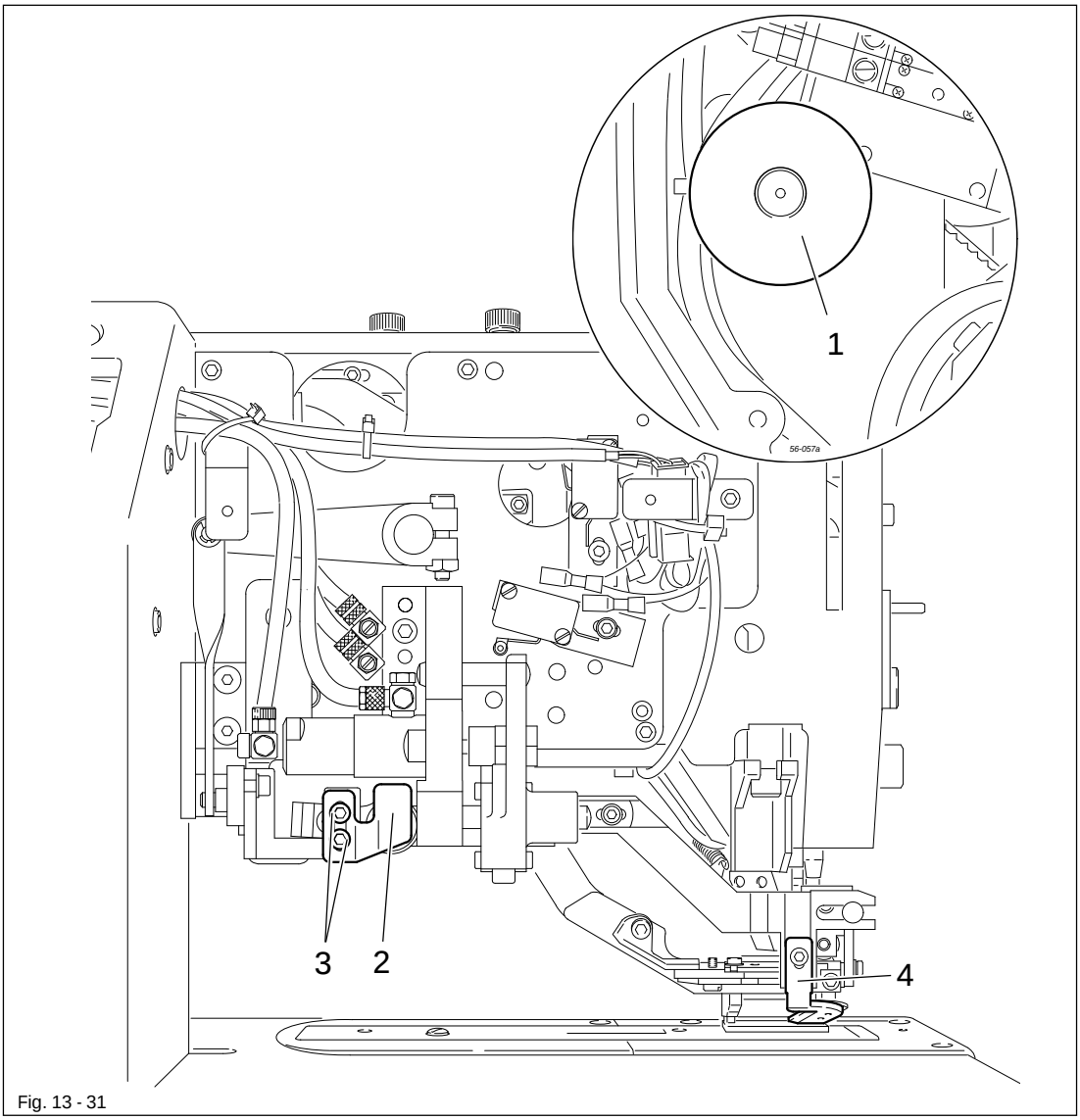

Fig. 13 - 31

- Bring the machine to t.d.c. take-up lever (balance wheel 1).
- Adjust cam 2 (screws 3) according to the requirements.

13.36 Needle bar rise and hook-to-needle clearance

Requirement

When the needle penetrates the right side of the left seam, the needle bar rise should be 2.4 mm. In this position, the point 5 of the hook should be exactly in the centre of the needle 6 and there should be a clearance of 0.1 mm between the needle and the hook point.

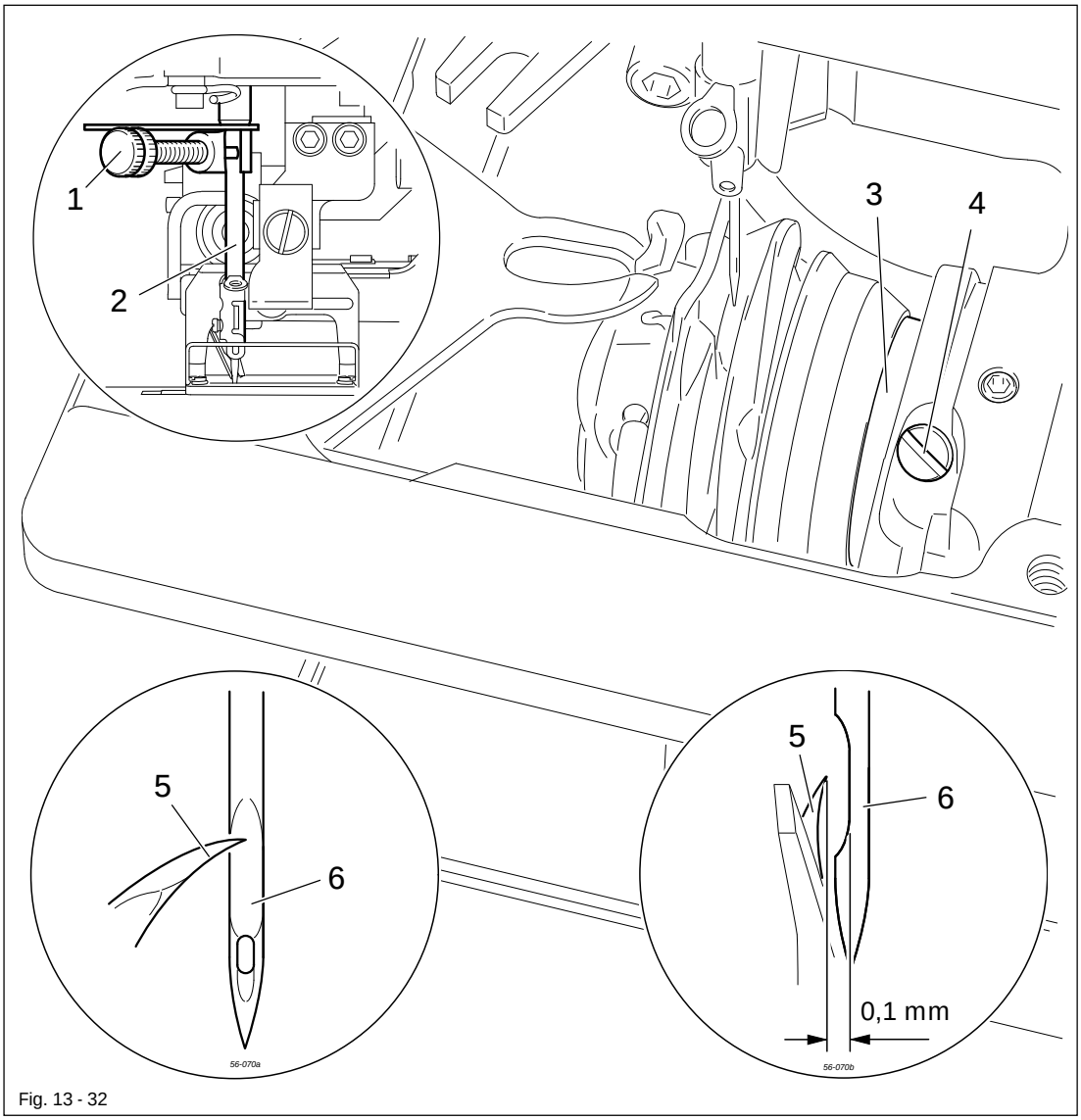

Fig. 13 - 32

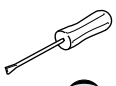



- Dismantle the feeder, needle plate and knife.
- Switch on the machine.
- Select parameter "610".
- Disengage the needle thread cutter by hand.
- Select position "1" (left seam, right penetration point).
- Bring the needle to b.d.c.
- Fit screw clamp 1 (Part no. 61-111 600-35/001) to needle bar 2.
- Bring 2.4 mm needle rise gauge (Part no. 61-111 600-09) between the screw clamp 1 and the guide stop of the needle bar 2.

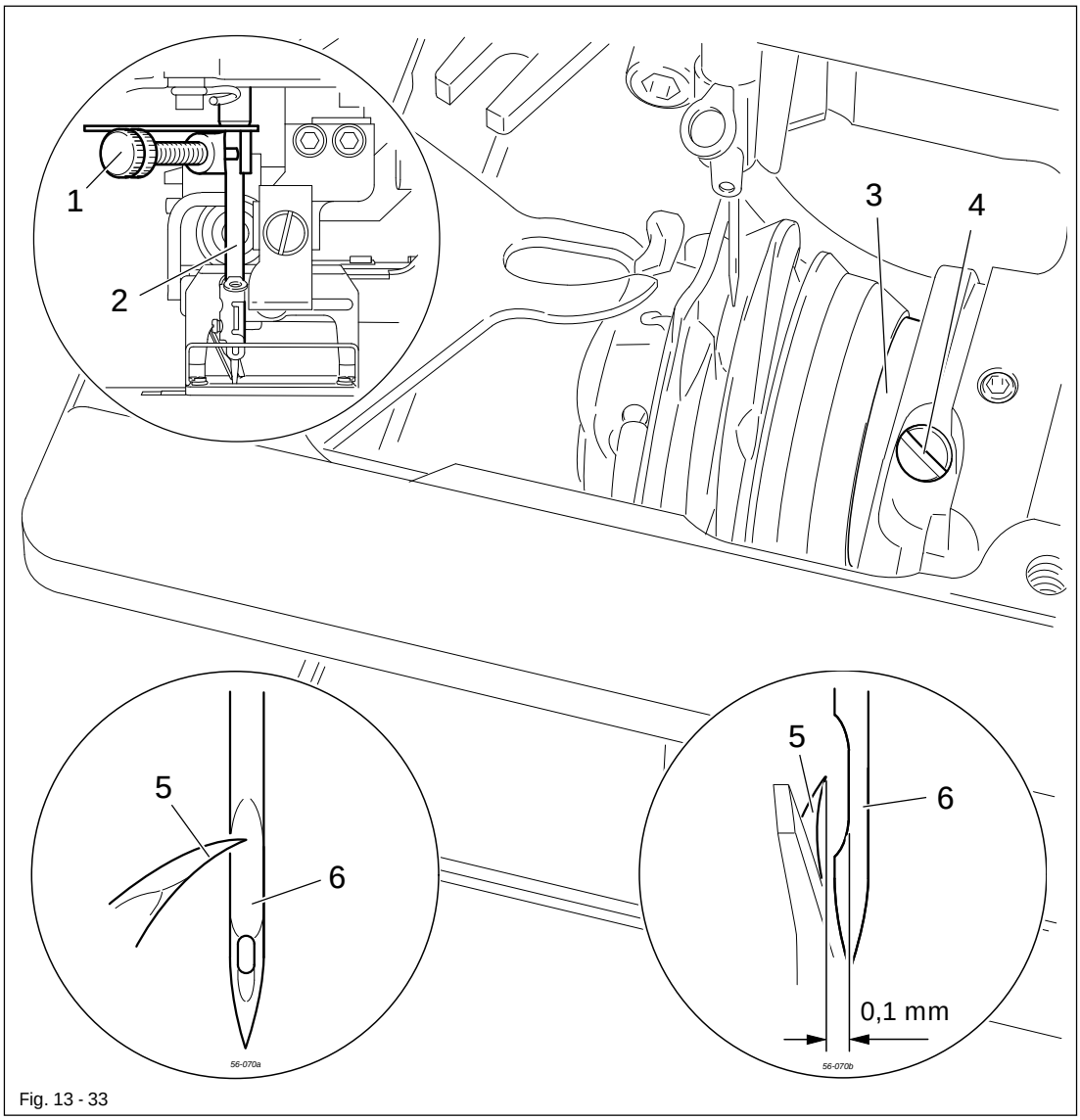

Fig. 13 - 33

- Loosen the screw clamp 1, slide up as far as possible and tighten it again.
- Remove the needle rise gauge.
- Turn the balance wheel in the direction of sewing until screw clamp 1 has contact.
- Twist or slide hook sleeve 3 (screws 4) in accordance with the requirement.
- Loosen and remove screw clamp 1.

The machine remains switched on for the next adjustment.

13.37 Needle bar height and needle guard

Requirement

1. When the needle penetrates the right side of the right seam, there should be a clearance of 0.5 mm between the top edge of the needle eye and the hook point 2 at the end of the needle rise.
2. When the needle penetrates the right side of the left seam, in needle rise position the needle should lightly touch needle guard 3.

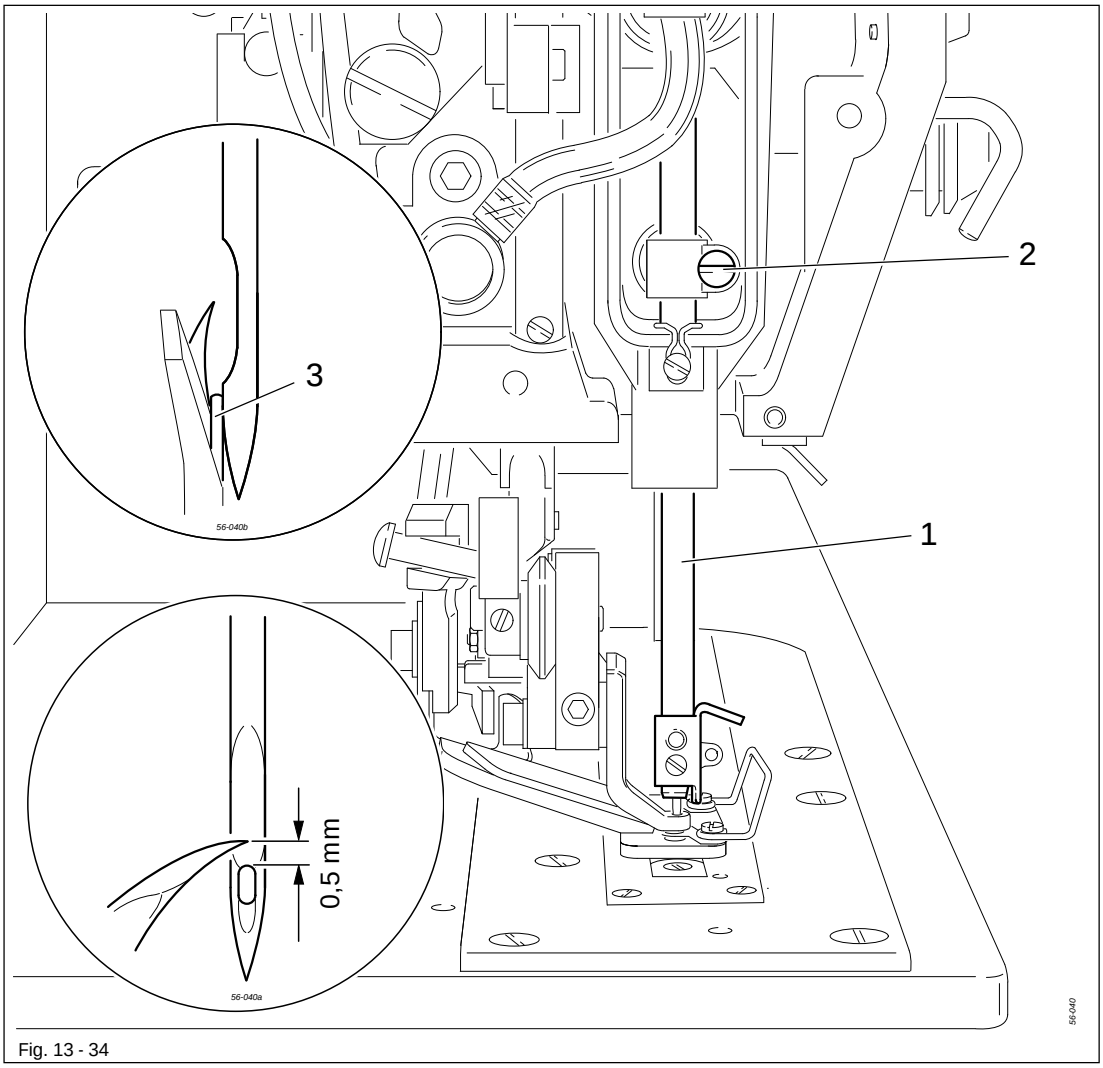

Fig. 13 - 34

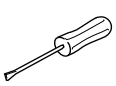

(+) (-)
- Select position "2" (right seam, right needle penetration).
- Adjust the needle bar 1 (screw 2) according to requirement 1.

(+) (-)
- Select position "1" (left seam, right needle penetration).
- Align needle guard 3 according to requirement 2.
- Switch off the machine.

13.38 Bobbin case holder

Requirement
The bobbin case holder should be scarcely but reliably held.

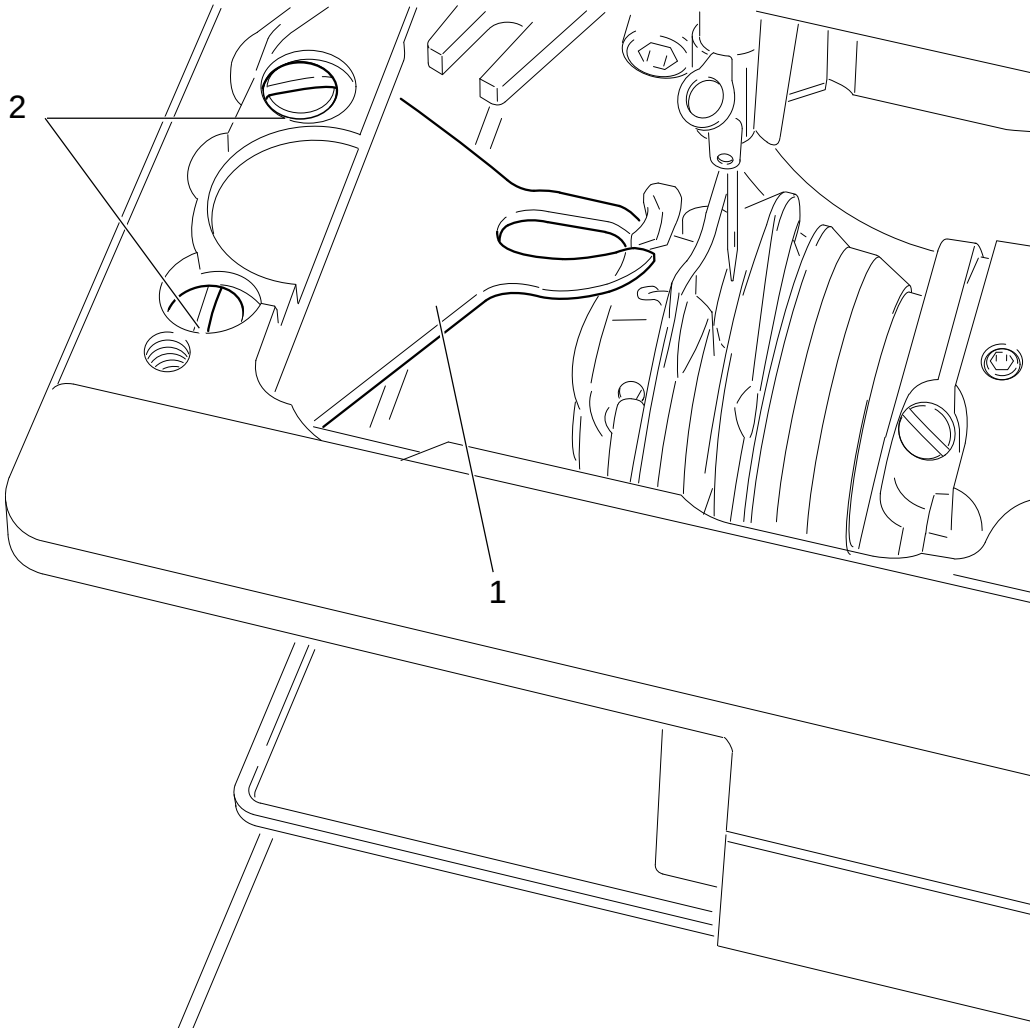

Fig. 13 - 35

- Adjust bobbin case holder 1 (screws 2) according to the requirement.
- Move the needle plate against the stop and screw tight.

13.39 Hook lubrication

Requirement

1. After approx. 10 sewing cycles, a fine oil streak should appear on a piece of paper held below the hook.
2. The felt ring should lightly touch the spring-loaded metal disc.

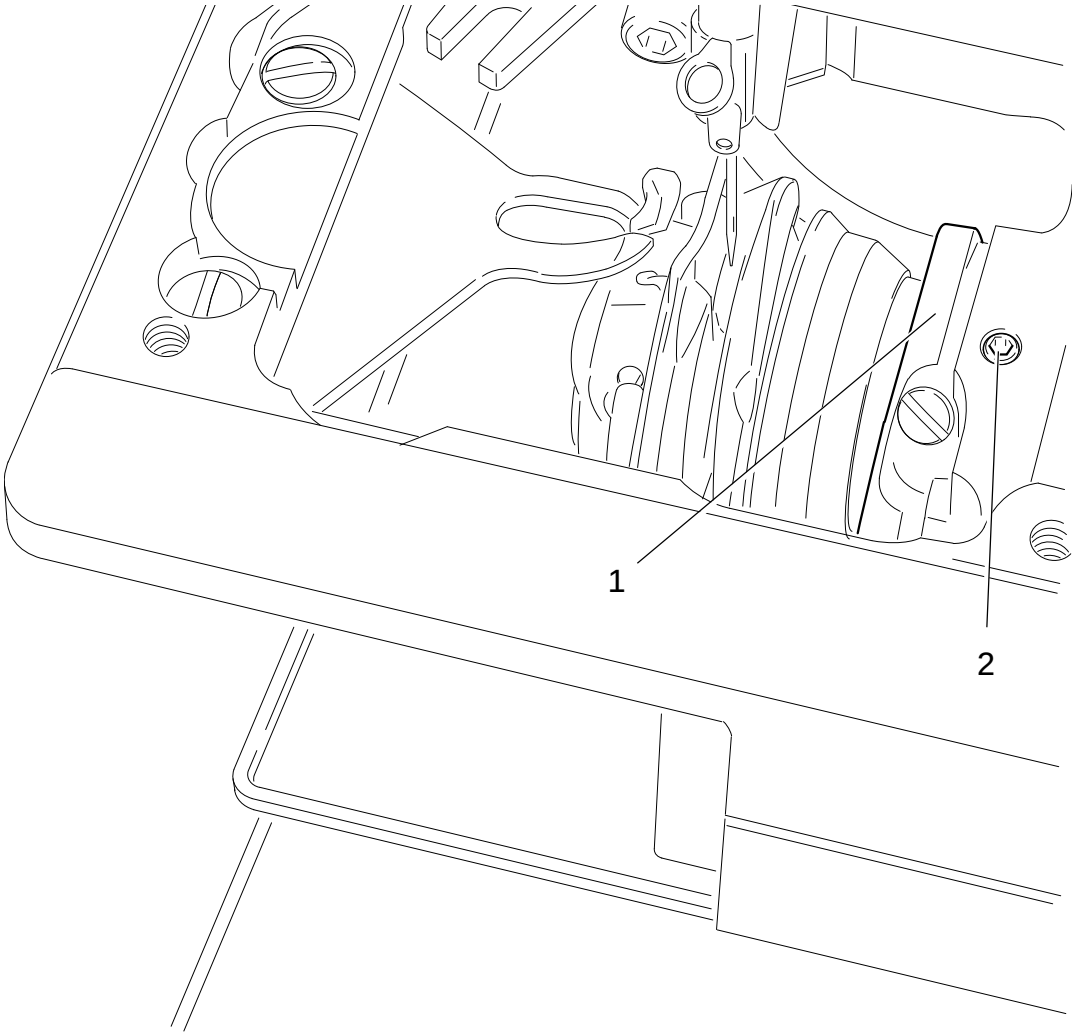

Fig. 13 - 36

- Check the oil level, see Chapter 12.06 Check the oil level for the hook.
- Switch on the machine.
- Adjust oil guide ring 1 (grub screw 2) according to the requirements.
- Switch off the machine.

13.40 Knife position

Requirement

1. (When the bobbin thread trimming device is in its neutral position), knife 1 should be parallel to the edge of the needle hole with a clearance of 0.5 mm.
2. During the cutting motion, the catcher 3 should move as near as possible to knife guard 5 without touching it.

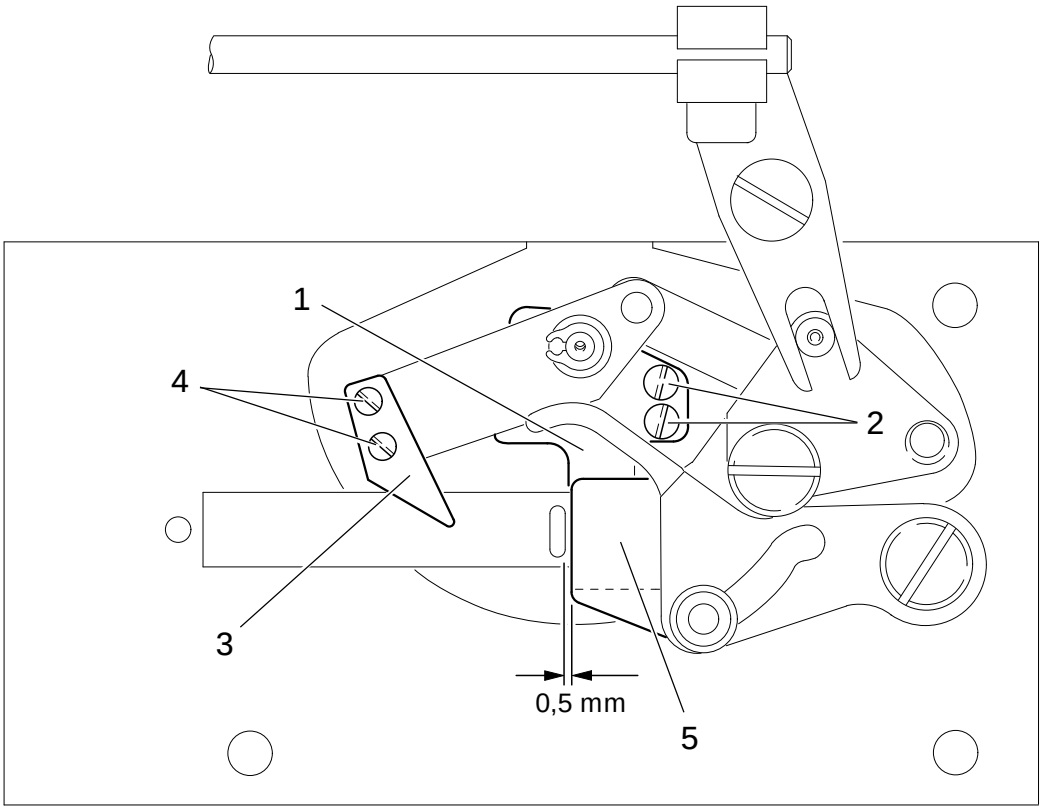

Fig. 13 - 37

- Adjust knife 1 (screws 2) according to requirement 1.
- Adjust catcher 3 (screws 4) according to requirement 2.

13.41 Knife guard

Requirement

1. When the bobbin thread trimming device is in its neutral position, knife guard 3 should be parallel to the edge of the knife 4.
2. The stud 5 should not touch the bottom of the cam (set clamp 1 in a vertical position).

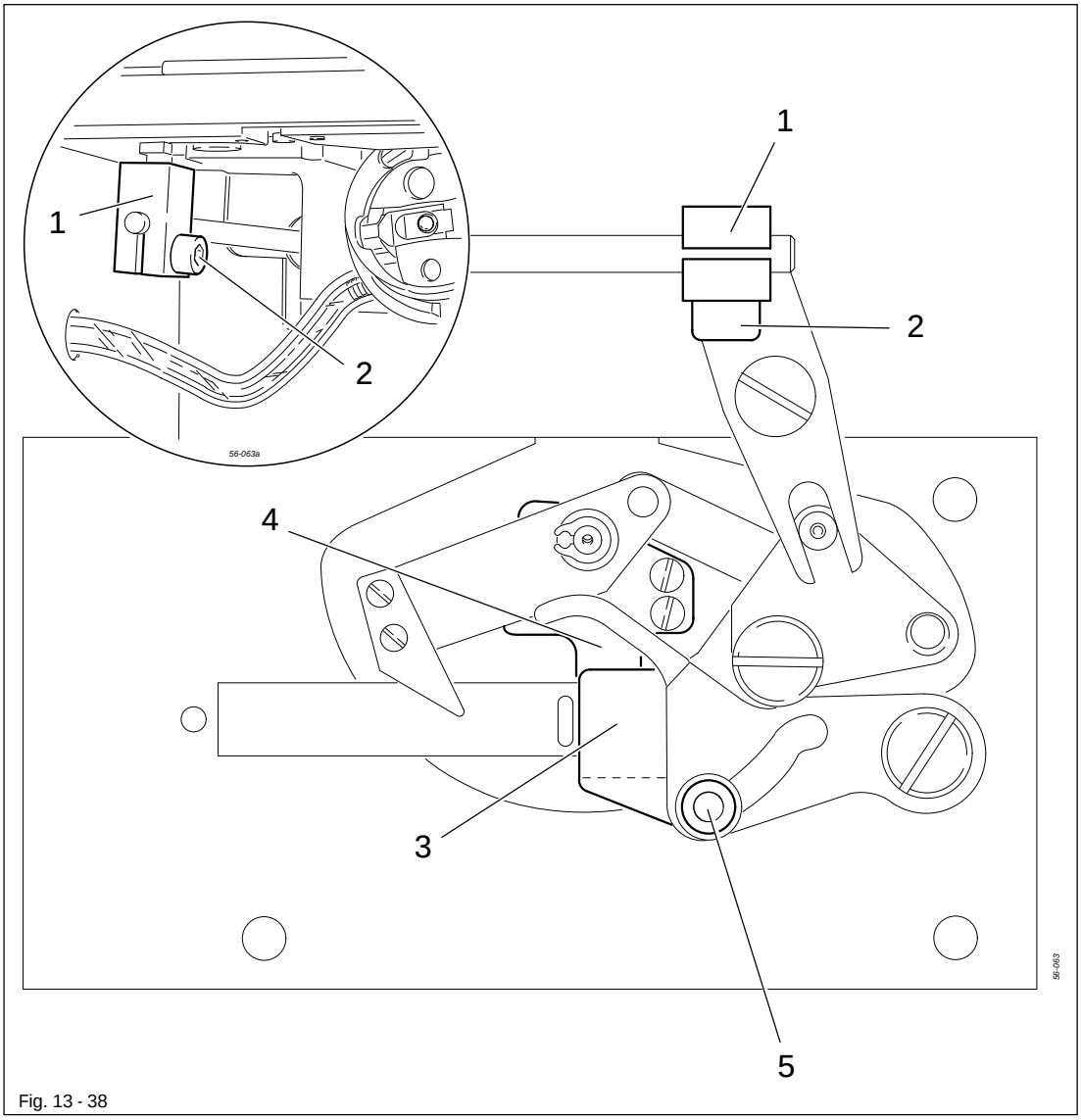

Fig. 13 - 38

- Switch on the machine.
- Dismantle feeder and needle plate insert.
- Switch off the machine and disconnect the compressed air supply.
- Adjust clamp 1 (screw 2) according to the requirements.
- Lift work clamp and fit needle plate insert and feeder.

13.42 Needle thread tension release

Requirement

1. When the thread tension unit 8 is in its neutral position, release magnet 9 should be at a distance of approx. 2- 3 from case 3.
2. When the thread tension unit 8 is open, the tensions disks 11 should be approx. 0.5 mm apart.
3. The thread tension unit 10 should open, before the knife cuts the thread.

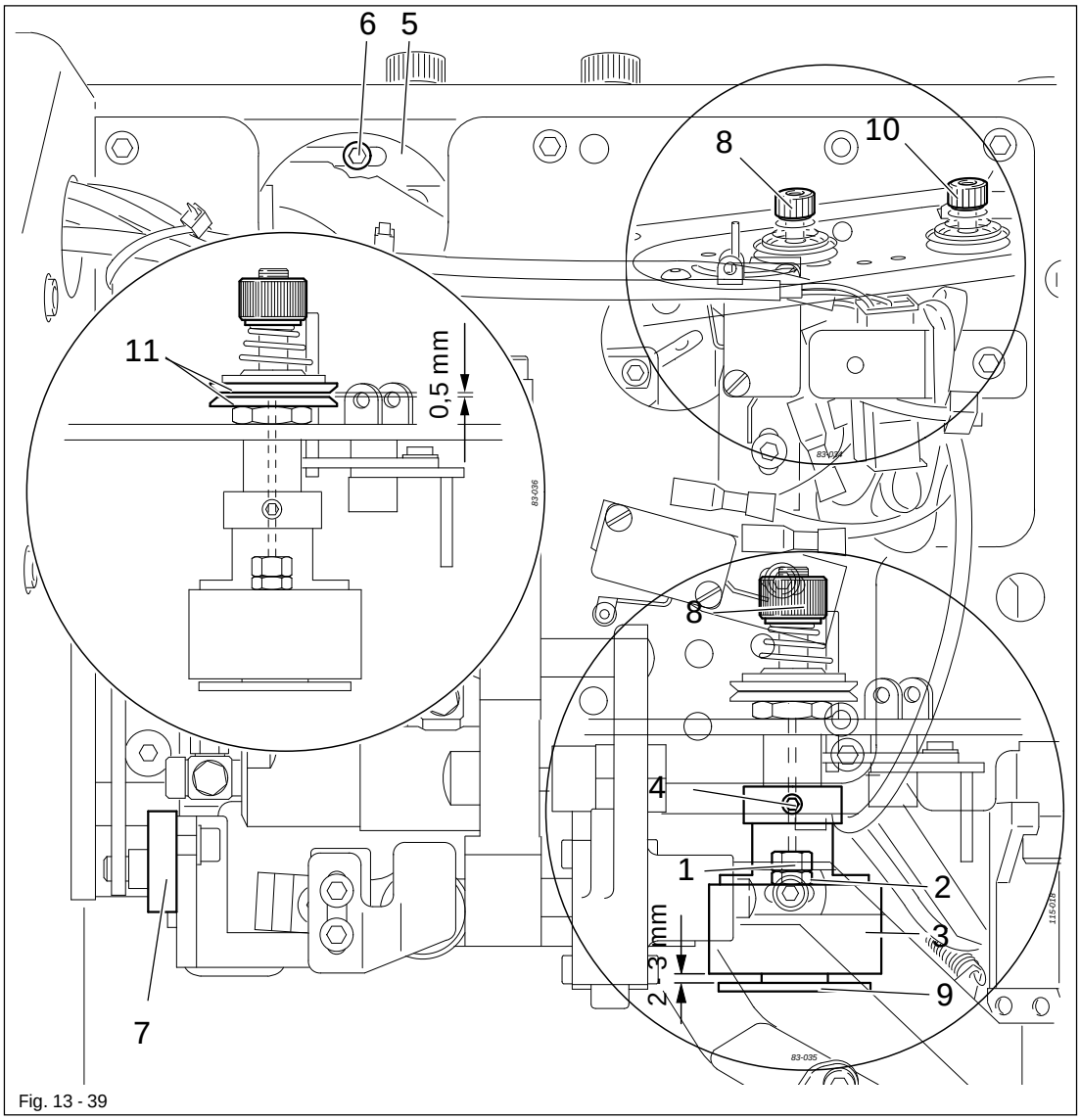

Fig. 13 - 39

- Remove the tension plate.
- Set nut 1 (locknut 2) in accordance with requirement 1.
- Adjust case 3 (screws 4) in accordance with requirement 2.
- Attach the tension plate.
- Adjust release 5 (screw 6) in accordance with requirement 3.
- Check the setting by operating lever 7.

13.43 Needle thread puller

Requirement

1. When sewing starts, the needle thread should not be pulled out of the needle thread cutter.
2. The loose needle thread must be used up after the first stitch.

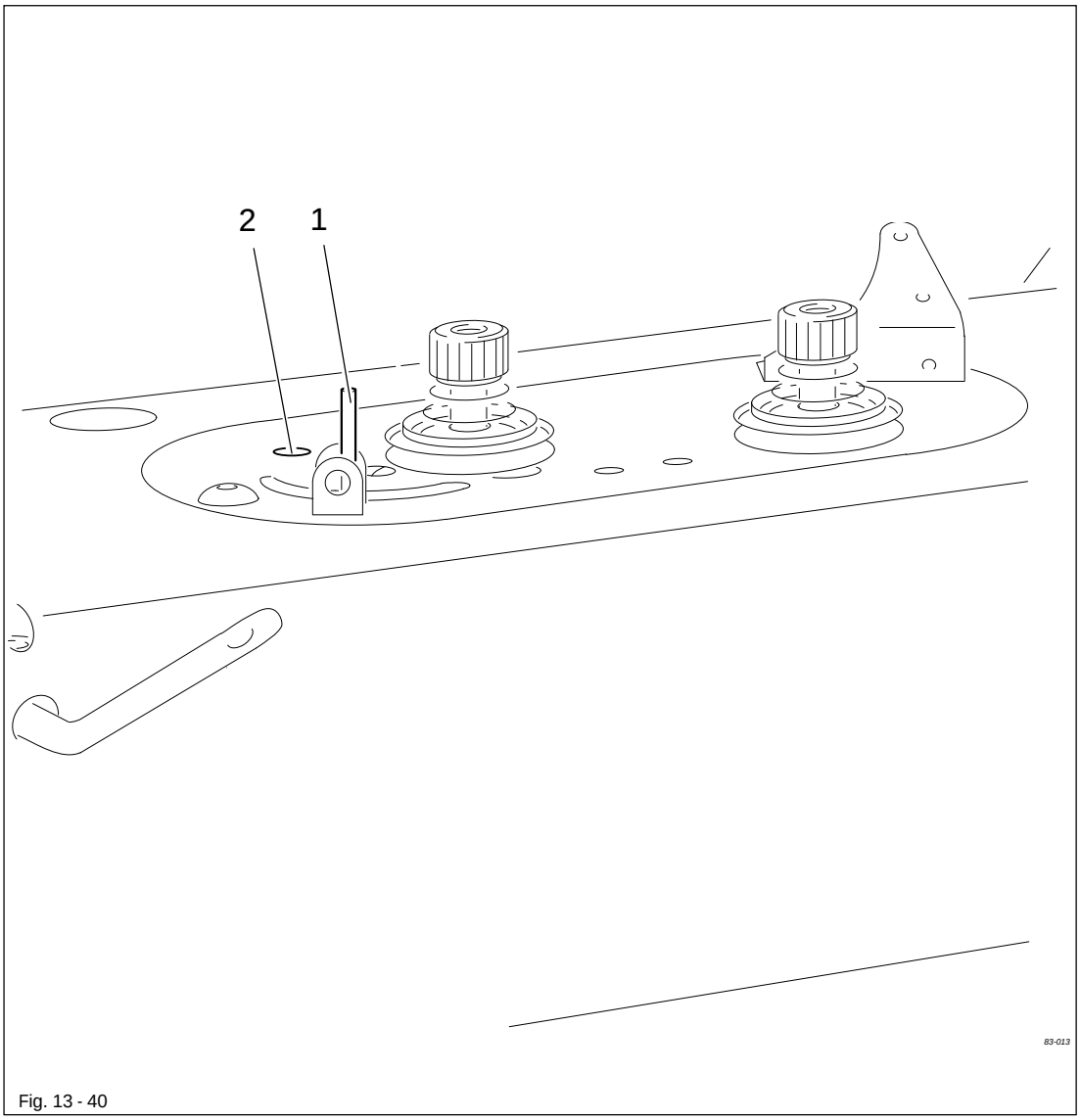

Fig. 13 - 40

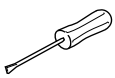

- Adjust needle thread puller 1 (screw 2) according to the requirements.

13.44 Side thread tension and slack thread regulator

Requirement

Thread check spring 5 should be

1. flush with the top edge of bar 6 and
2. rise slightly from its position rest when the thread loop through the hook is at its largest.

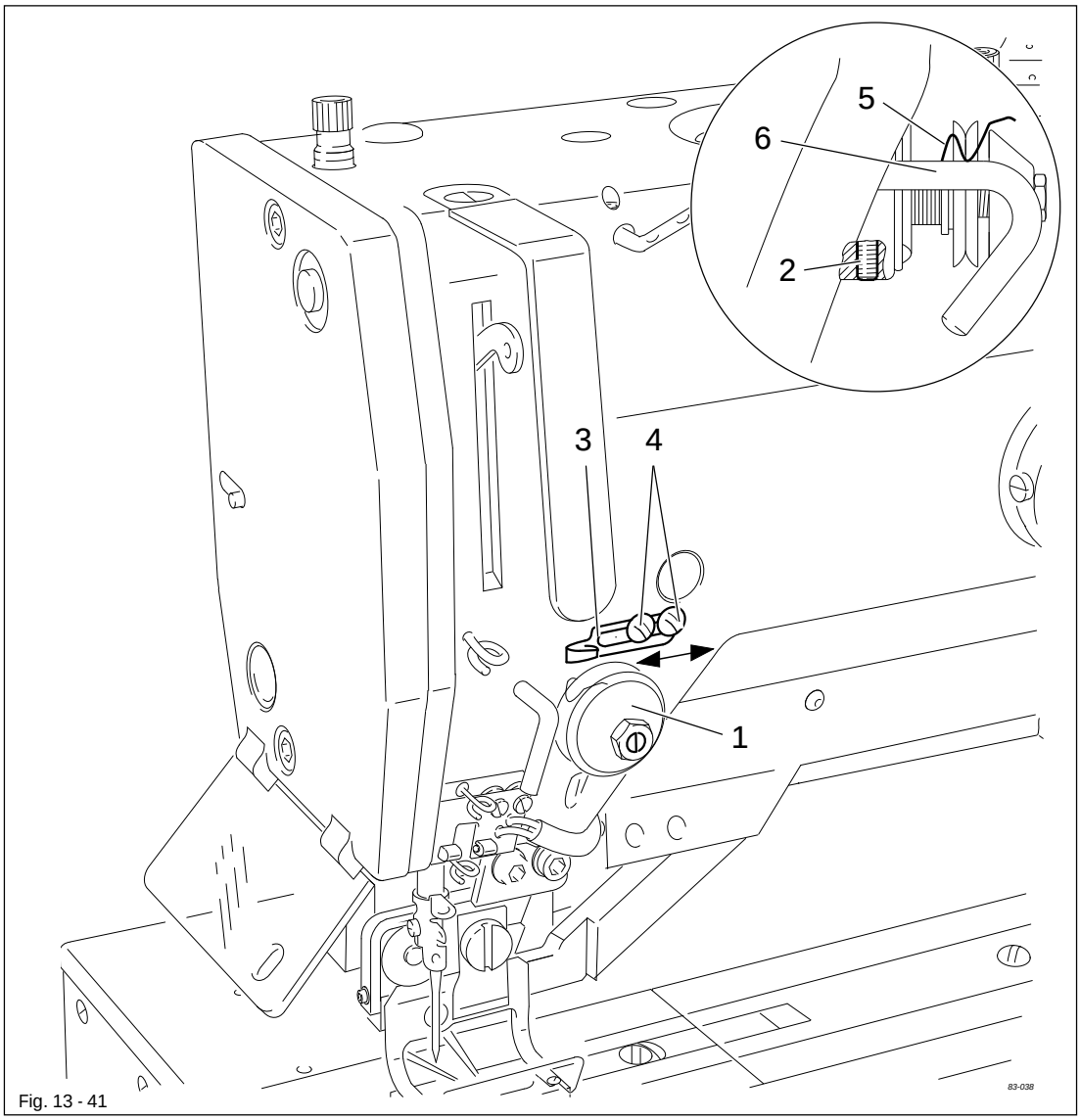

Fig. 13 - 41

- Thread the needle thread.
- Adjust the thread tension unit 1 (grub screw 2) according to requirement 1.
- Adjust the slack thread regulator 3 (screws 4) according to requirement 2.

The stroke of thread check spring 5 and the position of slack thread regulator 3 are dependent on the material and must be adjusted in accordance with the sewing results.

13.45 Bobbin winder

Requirement

1. When the bobbin winder is activated, the friction wheel 5 should be driven reliably.
2. When the bobbin winder is deactivated, the drive wheel 1 should not touch friction wheel 5.
3. When the bobbin is filled up to 1 mm from the edge, the bobbin winder should switch off automatically.

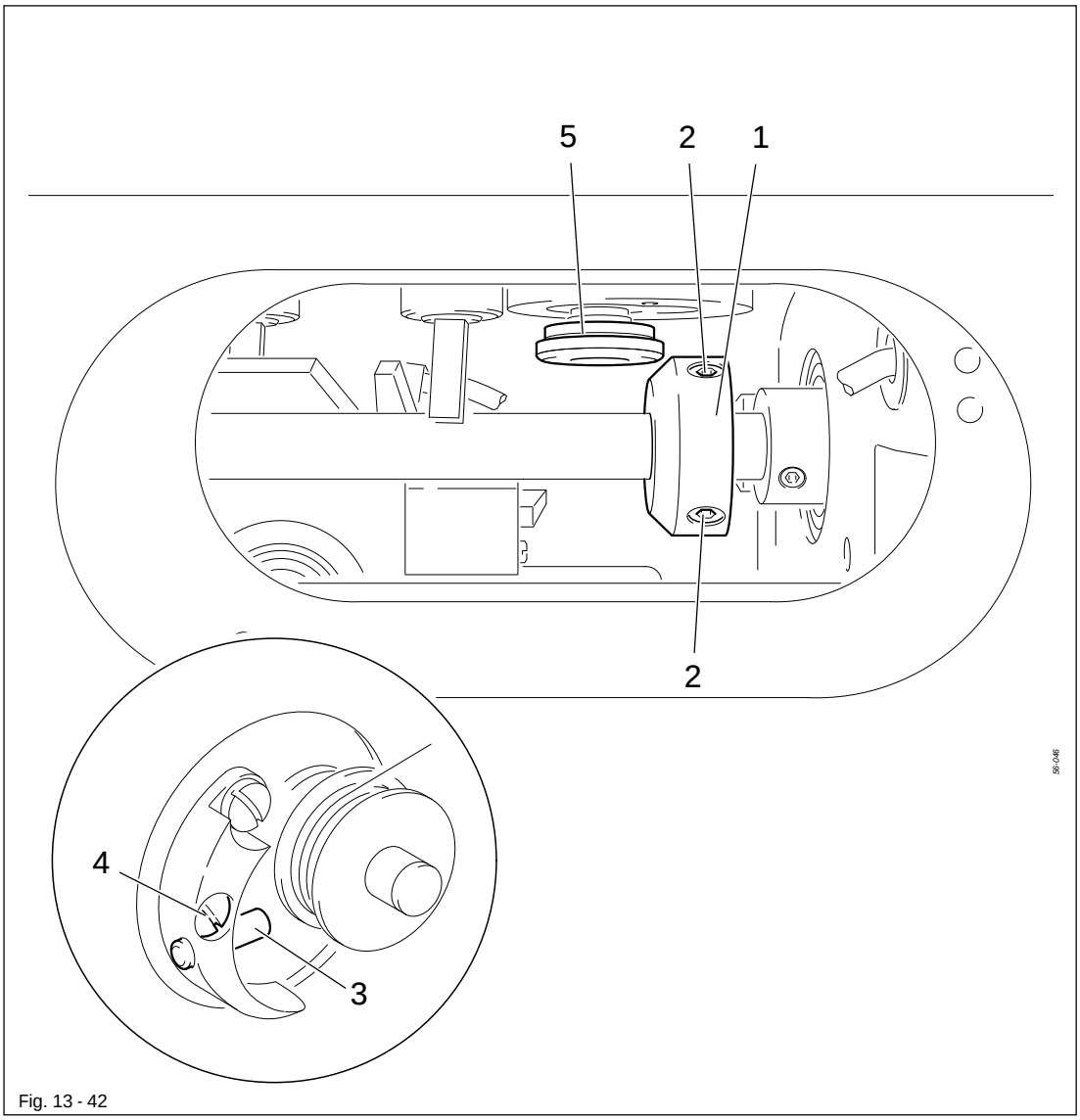

Fig. 13 - 42

- Adjust drive wheel 1 (screws 2) according to requirements 1 and 2.
- Adjust stud 3 (screw 4) according to requirement 3.

13.46 Retainer position (only for 3119-2/62 and -2/63)

Requirement

Retainer 1 should

1. be positioned parallel to the cutting slot with its front edge flush with the needle hole and
2. as near as possible over the workpiece without restricting it.

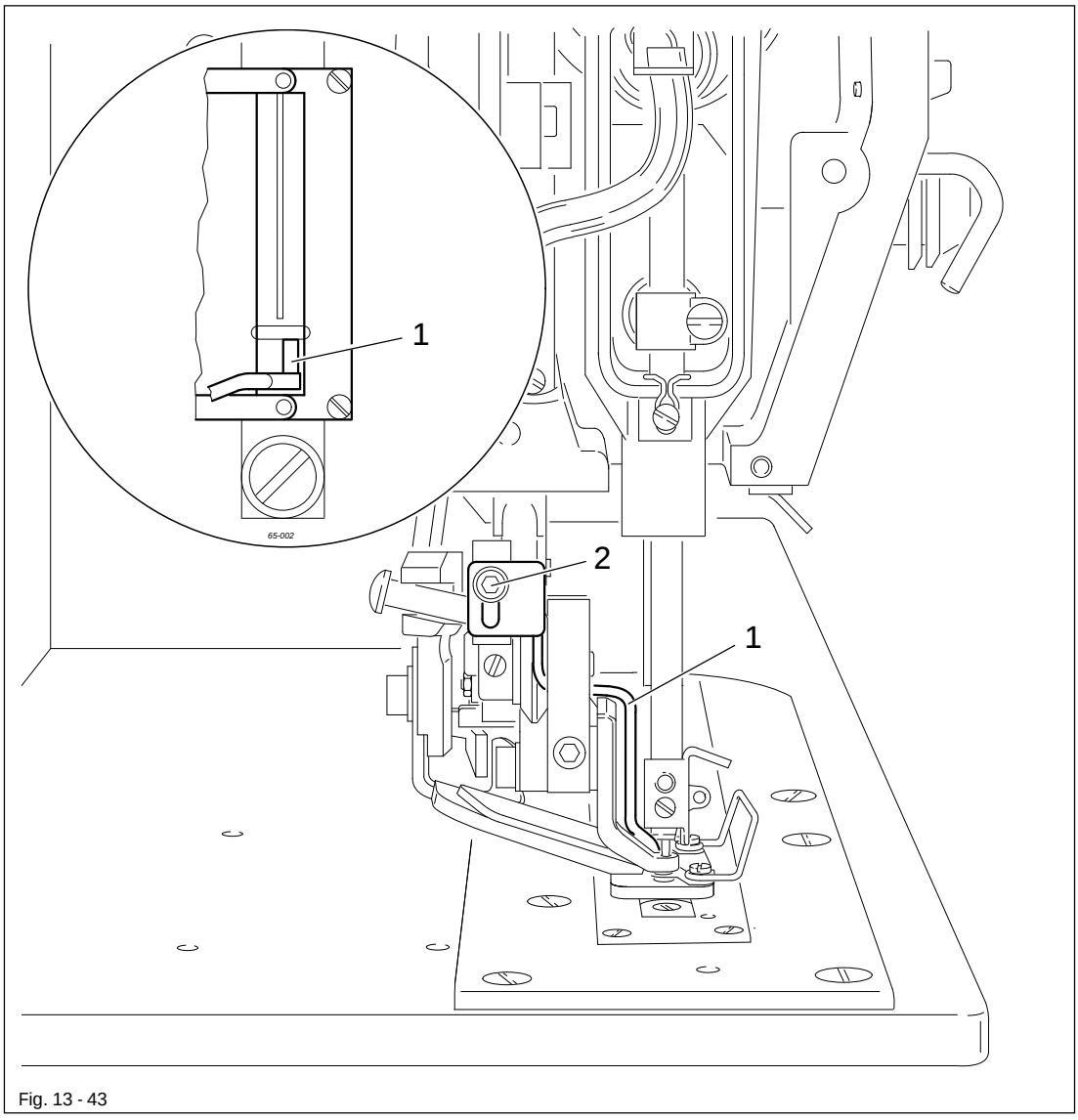

Fig. 13 - 43

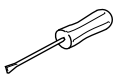

- Adjust retainer 1 (screw 2) according to the requirements.

13.47 Carrying out a cold start

When a cold start is carried out, all newly created or modified programs, and all altered parameter settings are deleted!
The machine memory is deleted or reset to the status at the time of delivery.

- Switch on the machine.

TE

- Select the input mode (LED in the key is on).

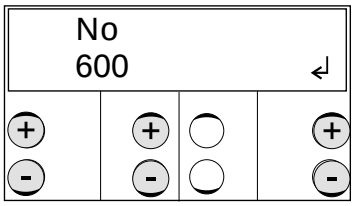

- Select the function group "600" with the appropriate plus / minus key.
- Confirm input with the "Enter" function by pressing the right plus key.
- Enter the code, see Chapter 11.03 Entering/altering the access code.

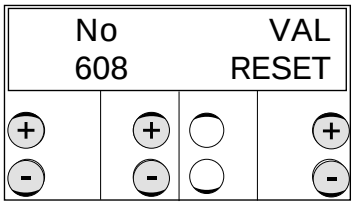

- Select parameter "608" (carry out a cold start) with the appropriate plus / minus key.
- Confirm input with the "Enter" function by pressing the right plus key.
- Switch the machine off and on again after about 3 seconds twice.

13.48 Parameter settings

All variable machine functions are listed in the parameter list (Chapter 13.48.02). An example of how to select the parameters and how to alter the values is given below (Chapter 13.48.01).

13.48.01 Selecting and altering parameters

Example: Switching on the needle thread monitor

- Switch on the machine.

TE

- Select the input mode (LED in the key is on).

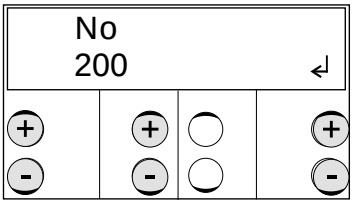

- Select the function group "200" with the appropriate plus / minus key.
- Confirm input with the "Enter" function by pressing the right plus key.
- Enter the code, see Chapter 11.03 Entering/altering the access code.

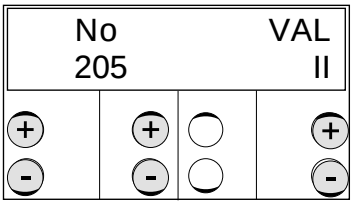

- With the corresponding plus/minus key enter e.g. parameter "205" (needle thread monitor).
- With the corresponding plus/minus key switch on the needle thread monitor. (value "II").

TE

- Conclude parameter input by switching to operational mode Sewing (LED in the key goes off)

.

13.48.02 List of parameters

Group	Parameter	Meaning	Setting	Standard value
1	101	Knife suppression permanent (I =OFF, II = ON)	I, II	I
	102	Stop for needle thread fault (I =OFF, II = ON)	I, II	I
	104	Display software version	-	0312/xxx
	105	Type of buttonhole▲: Single sewing cycle 1 - seam raised, 1 - bartack flat 2 - Seam and bartack flat 3 - Seam and bartack raised Double sewing cycle 1 - Seam raised bartack flat 2 - Seam and bartack flat 3 - Seam and bartack raised 4 - 1st cycle seam and bartack flat 1 - 2nd cycle seam and bartack raised 5 - 1st cycle seam and bartack flat 1 - 2nd cycle seam raised, 1 - bartack flat Type of bartack■: 1 - 1st seam raised, 2nd seam flat 2 - 1st and 2nd seam flat 3 - 1st and 2nd seam raised 4 - 1st seam flat, 2nd seam raised	1 - 5 1 - 4	1 1
	108	Number of securing seam cycles Buttonhole model 1 Buttonhole model 2 Buttonhole model 3 - 31	- 1 - 9 0 - 9	0
	109	Distance of the securing seam to the outer edge of the buttonhole	0,1 - 1,0	0,6
	110	Selecting programs	I, II	I
	111	Programming sequence 1	-	-
	112	Programming sequence 2	-	-
	113	Programming sequence 3	-	-
	114	Sequence mode (I = OFF, II = ON)	I, II	I
	115	Operating mode I = buttonhole; II = bartack	I, II	I

▲ In buttonhole mode (parameter "115" at "I")

■ In bartack mode (parameter "115" at "II")

Group	Parameter	Meaning	Setting	Standard value
1	116	Software version motor control unit	-	Vxx
	117	Control panel key tone (I = OFF; II = ON)	I, II	II
2	201	Delete vario programs	-	-
	202	Subclass 1: 3119-1/51 und 1/52 2: 3119-2/51 und 2/62 3: 3119-2/53 und 2/63 4: 3119-3/51 5: 3119-4/51 6: 3119-5/51	1 - 7	1
	205	Needle thread monitor OFF = 1, ON = II	I, II	II
	206	Copy programs	-	-
	207	Length of installed knife	6,4 - 38,1	
	208	Cut overlap of the knife fitted	0,0 - 4,0	0,0
	209	Double cycle (stitch divisor) 1 = full no. of stitches per cycle 2 = half no. of stitches per cycle stitch offset from 1st to 2nd cycle	1.2 0.0 - 2.0	1 0.3
	210	Min. cutting distance to bartack Distance of front edge knife to needle centre	0,0 - 1,0 0,0 - 5,0	0,7 2,1
	211	Number of securing stitches	1 - 3	1
3	301	Program number	1 - 39	1
	302	Cut length [mm]▲ Bartack length [mm]■	6,4 - 38,1 10 - 70	12,7 14
	303	Buttonhole model▲ Bartack model■	1 - 31 35	1 35
	304	Distance of left seam from centre of cutting line (needle penetration right) = distance A (mm)▲ Distance of left bartack to centre of cutting line (no function)■	-2,0 - 2,0 -2,0 - 2,0	0,2 0,4

▲ In buttonhole mode (parameter "115" at "I")

■ In bartack mode (parameter "115" at "II")

Group	Parameter	Meaning	Setting	Standard value
3	305	Width of left seam = width A [mm]▲	0,5 - 5,5	1,5
		Width of 1st seam [mm]■	0,0 - 6,0	2,0
	306	Length of left seam (same length as right seam) = length A [mm]▲	1,0 - 48,0	14,8
		Stitch length of 1st seam [mm]■	0,1 - 3,0	2,0
	307	Number of stitches in left seam = number of stitches A▲	1 - 255	32
		Secondary tension for 1st seam■ (I = off; II = on)	I, II	II
	308	Secondary thread tension left seam (II = on; I = off)▲	I, II	I
		Distance of right bartack to centre of cutting line (no function)■	-2,0 - 2,0	0,4
	309	Width of 1st bar = width B [mm]▲	1,0 - 5,5	3,
		Width of 2nd seam [mm]■	0,0 - 6,0	2,0
	310	Second width of 1st bar = = width B1 [mm]▲	0,0 - 5,5	0,0
		Stitch length of 2nd seam [mm]■	0,1 - 3,0	2,0
	311	Length of 1st bar = length B [mm]▲	1,0 - 6,0	1,2
		Secondary tension for 2nd seam■ (I = off; II = on)	I, II	II
	312	Second length of 1st bar = length B1	0,0 - 6,0	0,0
	313	Number of stitches in 1st bar = number of stitches B	1 - 99	8
	314	Distance of 1st bar to centre of cutting line = distance B [mm]	-2,0 - 2,0	0,0
	315	Secondary thread tension of 1st bar (II = on; I = off)	I, II	II
	316	Distance of right seam from centre of cutting line (needle penetration left) = distance C (mm)	-2.0 to 2.0	0.2
	317	Width of right seam = width C (mm)	0.5 - 5.5	1.5
	318	Length of right seam (same length as left seam) = length C (mm)	1.0 - 48.0	14.8

▲ In buttonhole mode (parameter "115" at "I")
■ In bartack mode (parameter "115" at "II")

Group	Parameter	Meaning	Setting	Standard value
3	319	Number of stitches in right seam = number of stitches C	1 - 255	32
	320	Secondary thread tension right seam (II = on; I = off)	I, II	I
	321	Width of 2nd bar = width D (mm)	1.0 - 5.5	3.4
	322	Second width of 2nd bar = width D1 (mm)	0.0 - 5.5	0.0
	323	Length of 2nd bar = length D (mm)	1.0 - 6.0	1.2
	324	Second length of 2nd bar = length D1 (mm)	0.0 - 6.0	0.0
	325	Number of stitches in second bar = number of stitches D	1 - 99	8
	326	Distance of second bar to centre of cutting line = distance D (mm)	-2.0 to 2.0	0.0
	327	Secondary thread tension of 2nd bar (II = on; I = off)	I, II	II
4	401	Delay time for raising clamp	0.00 - 1.50	0.10
	402	Start delay after lowering clamp	0.00 - 1.50	0.10
	403	Cutting time	0.00 - 2.00	0.10
5	501	Soft start stitches	0 - 15	2
	502	Soft start speed	500 - 1500	1500
	503	Reduced speed	500 - 4200	3500
	504	Suppressed stitches needle thread monitor	0 - 15	3
	505	Suppressed stitches bobbin thread monitor	0 - 15	3
	506	Secondary thread tension at sewing start (stitches)	0 – 3	0
6	601	Move stepping motor work clamp and needle		

Group	Parameter	Meaning	Setting	Standard value
6	602	Display inputs (0123456789ABCDEF) Meaning of the display: 0 = Error bobbin thread monitor 1 = Error needle thread monitor 2 = Needle in material (NIS) 3 = Reference needle (needle centre) 4 = not assigned (E12) 5 = not assigned (E11) 6 = not assigned (E10) 7 = not assigned (E9) 8 = not assigned (E8) 9 = programmable input 1 (E7) A = programmable input 2 (E6) B = Key for knife suppression B = on sewing head (E5) C = Basic position knife (E4) D = Clamp lowered (E3) E = Basic position cutter (E2) F = Reference clamp (E1)		
	603	Switch outputs 1 = Clamp (O1) 2 = Secondary thread tension (O2) 3 = Knife (O3) 4 = Cutter (O4) 5 = not assigned (O5) 6 = not assigned (O6) 7 = programmable outlet 1 (07) 8 = programmable outlet 2 (08) (1 = ON; 0 = OFF)	1.0	
	605	Position of the needle to the workpiece	0 - 127	15
	606	Reference point -Needle to work clamp		
	607	Turn sewing motor in direction of sewing		
	608	Carry out cold start		RESET
	609	Reference point - machine to motor		
	610	Move to needle positions for hook adjustment 1 - left seam, right needle entry 2 - right seam, right needle entry 3 - right seam, left needle entry 4 - left seam, left needle entry	1 - 4	
	612	Adjusting aid for zero position of the sewing motor (factory presetting with gauge)	1, 0	

Group	Parameter	Meaning	Setting	Standard value
7	701	P-quota speed controller	1 -50	10
	702	I-quota speed controller	0 - 100	50
	703	P-quota position controller	1 - 50	20
	704	D-quota position controller	1 - 100	30
	705	Time for position controller	0 - 100	25
	706	P-quota position controller for rest brake	1 - 50	25
	707	D-quota position controller for rest brake	1 - 50	15
	708	Maximum moment for rest brake	1 - 50	0
	709	Minimum machine speed	3 - 64	6
	710	Maximum machine speed	1 - 100	45
	711	Maximum motor speed	500 - 4200	4200
	712	Positioning speed	3 - 25	25
	713	Acceleration ramp	1 - 50	35
	714	Brake ramp	1 - 50	40
	715	Reference position	0 - 127	15
	716	Time-out	0 - 255	40
	717	Starting current motor	3 - 10	7
	718	Anti-vibration filter	1 - 10	3
	719	Rotation direction allocation	0 - 1	1
	720	Reserved (do not change!)	0 - 127	64
8	801	Right of access function group 100	0 - 1	0
	802	Right of access function group 200	0 - 1	1
	803	Right of access function group 300	0 - 1	1
	804	Right of access function group 400	0 - 1	1
	805	Right of access function group 500	0 - 1	1
	806	Right of access function group 600	0 - 1	1

Group	Parameter	Meaning	Setting	Standard value
8	807	Right of access function group 700	0 - 1	1
	808	Right of access function group 800	0 - 1	1
	809	Right of access keys maximum speed	0 - 1	0
	810	Right of access key cutting length	0 - 1	0
	811	Right of access key piece counter	0 - 1	0
	812	Right of access key reverse counter	0 - 1	0
	813	Right of access program key	0 - 1	0
	814	Right of access program key 2	0 - 1	0
	815	Right of access program key 3	0 - 1	0
	816	Right of access key buttonhole width	0 - 1	0
	817	Right of access key cutting width	0 - 1	0
	818	Right of access key double sewing cycle	0 - 1	0
	819	Key for right of access "Program management"	0 - 1	0
	820	Enter access code	0 to 9999	3119

13.49 Malfunctions

13.49.01 Error messages

Error	1:	System fault in the control unit
Error	2:	Defect on sewing motor
	30:	Time out + motor defect
	20:	Time out + motor defect
	10:	Speed + motor defect
	0B:	StopX + motor defect
	0A:	Reset stitch counter + motor defect
	9:	Write parameter + motor defect
	5:	Position tdc shortest path + motor defect
	3:	Position tdc backwards + motor defect
	2:	Position tdc forwards + motor defect
Error	3:	Knife control (e.g. mechanically locked)
Error	4:	Cutter control
Error	5:	Lift control of work clamp
Error	6:	Time control when working through the sewing program
Error	7:	Ramp end of stepping motor
	7-1:	Ramp end of stepping motor
	7-1:	Delay X not finished
	7-2:	Delay Y not finished
	7-3:	Delay X and Y not finished
	7-4:	Ramp X not finished
	7-5:	Ramp Y not finished
Error	8:	Stitch length too large
Error	9:	Sewing pattern outside area
Error	10:	Error when moving the machine into basic position (home)
	10-1:	Outputs not finished
	10-2:	Raise work clamp
	10-3:	Start sewing position not reached
	10-6:	Foot pedal operated
	10-7:	X-centre not reached
	10-8:	still at X-centre
	10-9:	Y-centre not reached
	10-10:	still at Y-centre
	10-11:	time control home test
	10-12:	Absolute position –0.3 not reached home test
	10-13:	Absolute position +0.6 not reached home test
	10-14:	Move to tdc take-up lever
Error	11:	Stepping frequency of the stepping motor is too high
Error	12:	Error in sewing program

Error 13: Sewing area larger than the work clamp cutout
Program does not fit into sewing area

Error 14: Output not connected (in seam program)

Error 15: Input not incoming (in seam program)

Error 16: Delay time when the sewing drive is running not permitted

Error 17: Cutting before previous sewing

Error 18: Incorrect command in data set

Error 19: Non-permissible program number / program number already allocated

Error 20: Needle thread breakage or needle thread inserted incorrectly

Error 21: Power unit overload (24 V)

Error 22: Incorrect mains voltage

Error 23: 24V power unit too low / or too high

Error 24: No stepping motor motion prepared (Nis)

Error 25: Stepping motor was not started (Nis)

Error 26: Incorrect knife length for multiple cutting

Error 27: Error in SD-memory card reader

27-1: No SD-memory card inserted

27-2: Wrong SD-memory card (does not match the machine)

27-3: SD-memory card not inserted correctly

27-4: SD-memory card with write protection

27-5: Data error on SD-memory card

27-6: Formatting failed

27-7: File does not match machine

27-8: Incorrect file size

27-9: Transfer error

27-10: Data cannot be deleted

29: Error during multiple cutting

13.49.02 Motor errors

Error No.	Description
34	Brake path too short
35	Communication error
36	Init not ready
65	Extint low bei Init
66	Short circuit
68	Extint low in operation
69	No increments
70	Motor blocking
71	No incremental connector
73	Motor running interrupted
75	Controller locked
170	Invalid transmission
171	Zero mark invalid
175	Interior start error
222	Time-out monitoring

14.01 Wearing parts

This is a list of the most important wearing parts.
A detailed parts list for the complete machine is included with the accessories. In case of loss, the parts list can be downloaded from the internet address www.pfaff-industrial.de/pfaff/de/service/downloads. As an alternative to the internet download the parts lists can also be ordered in book form under part no. 296-12-18 958.

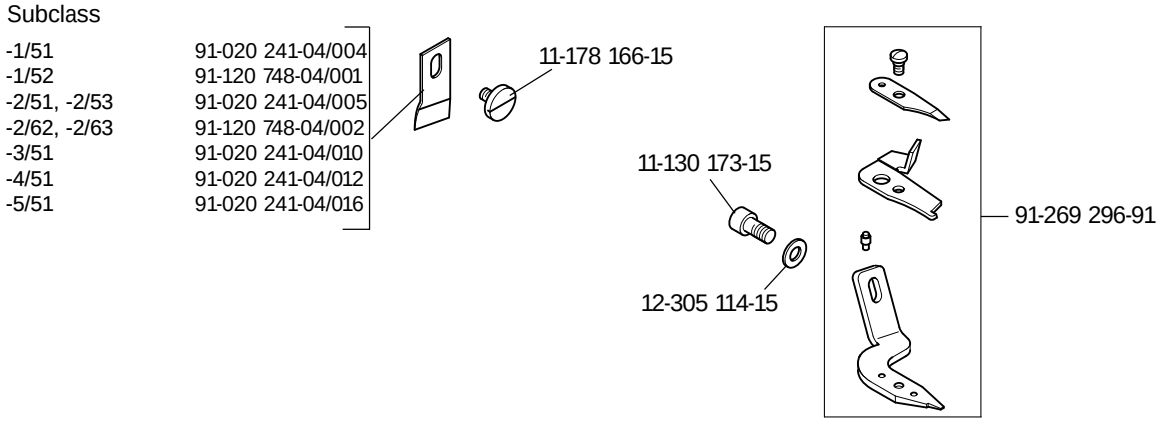

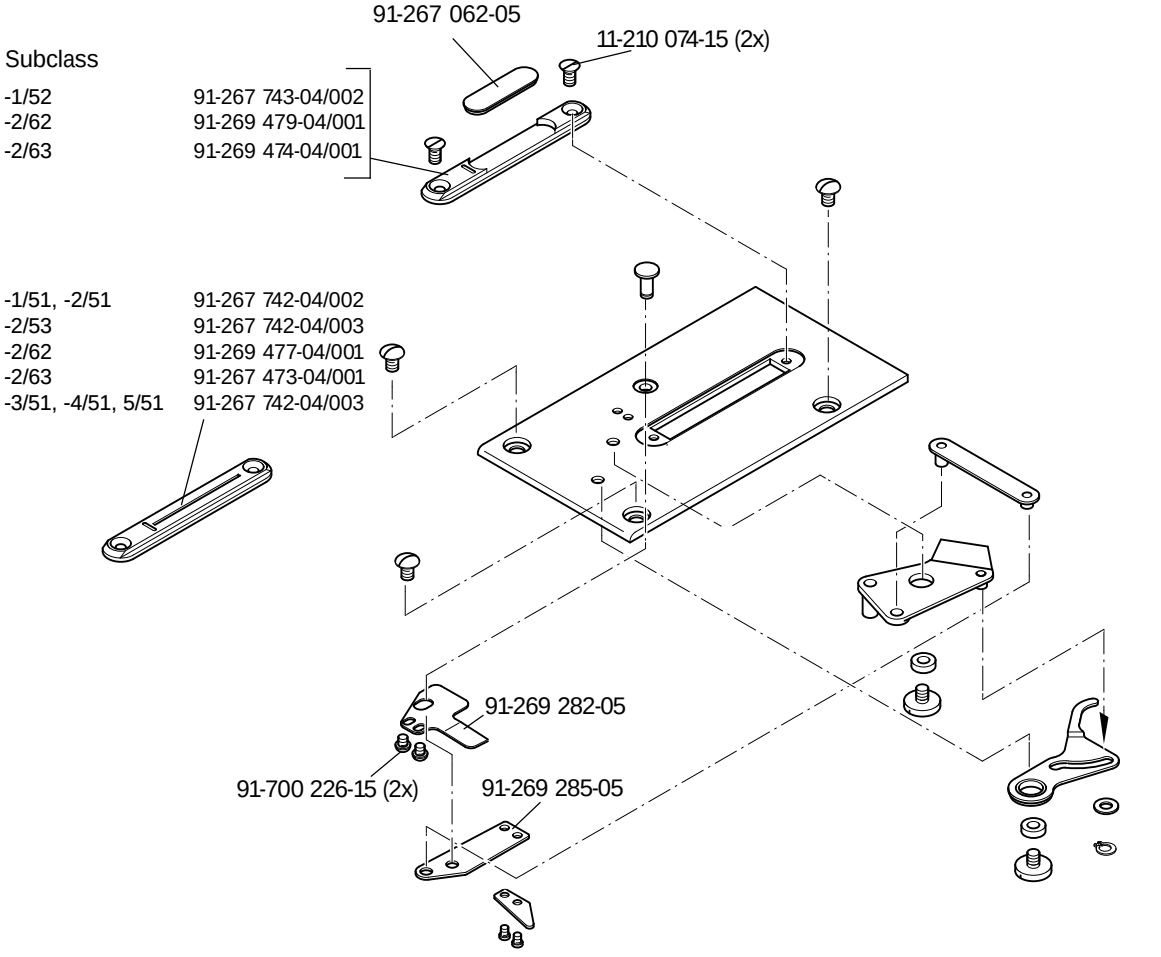

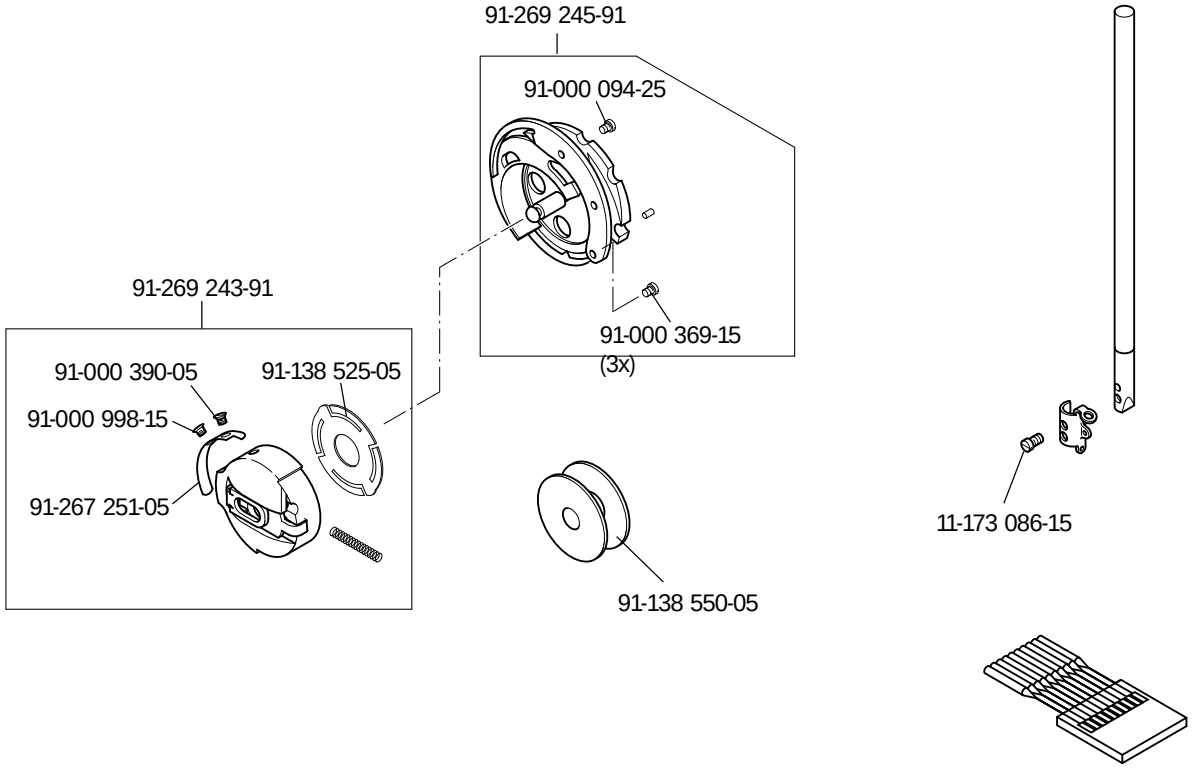
91-269 245-91
91-000 094-25
91-000 369-15
(3x)
91-269 243-91
91-000 390-05
91-138 525-05
91-000 998-15
91-267 251-05
91-138 550-05
11-173 086-15

System 438

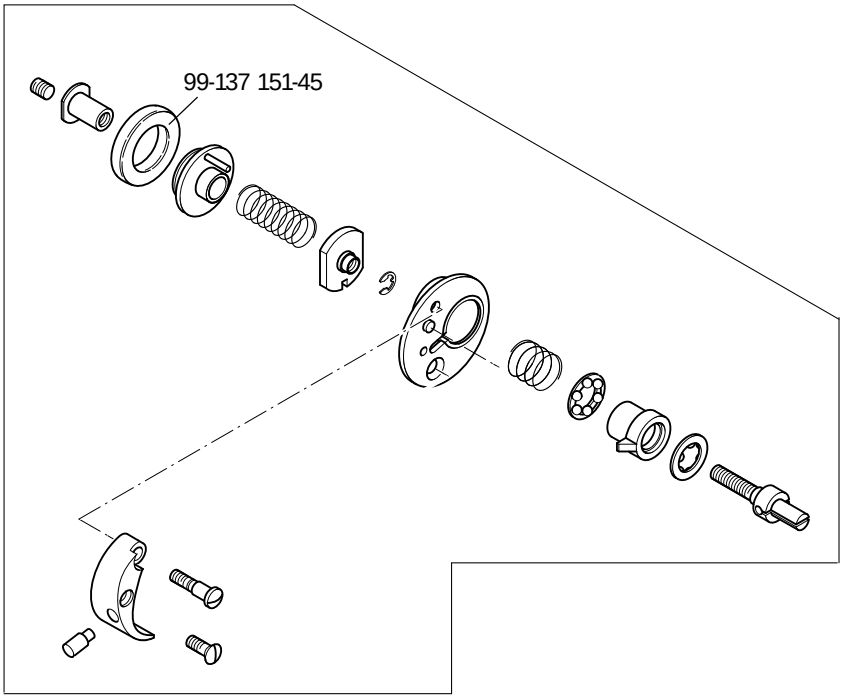
99-137 151-45

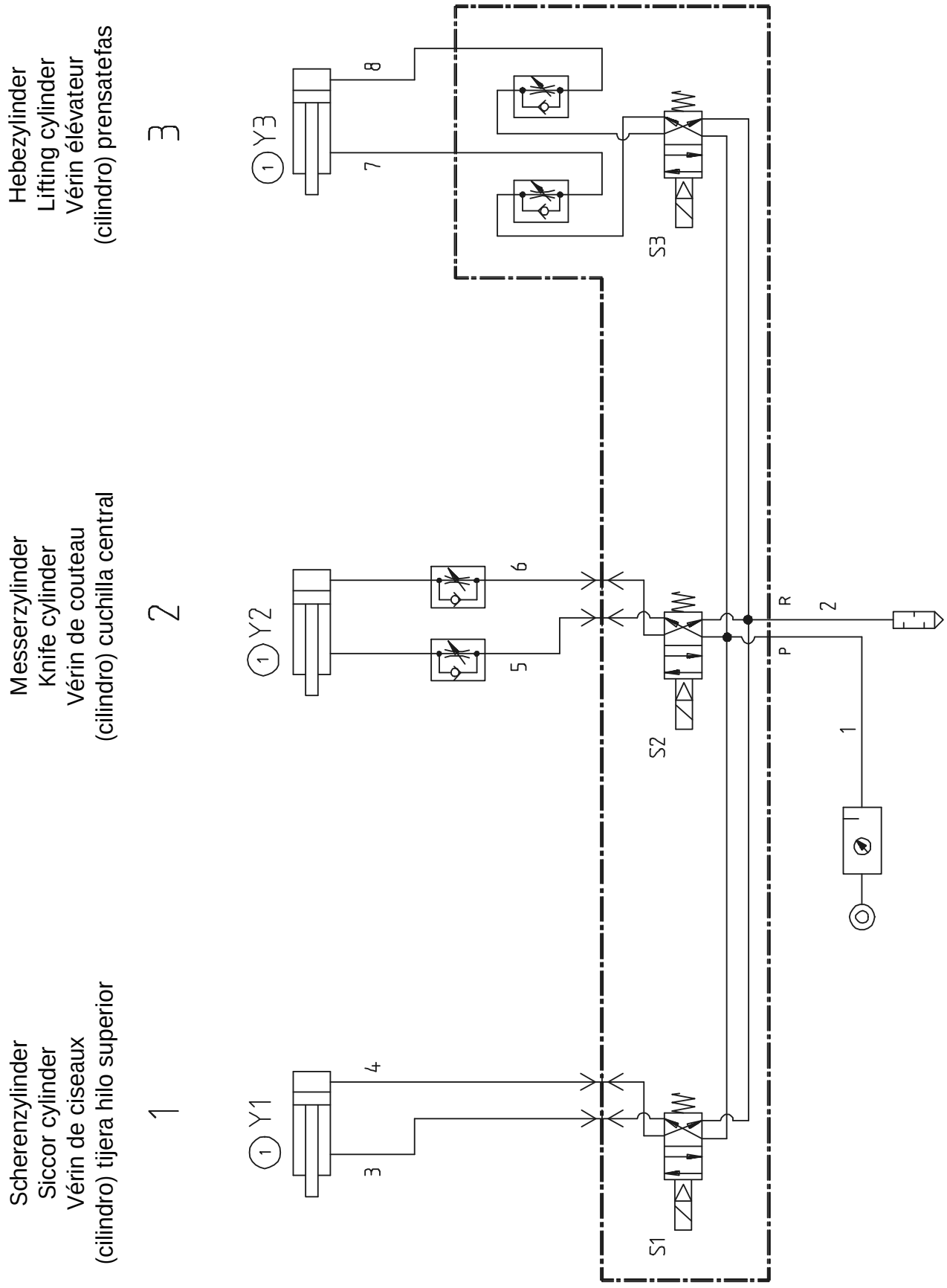
Hebezylinder
Lifting cylinder
Vérin élévateur
(cilindro) prensatefas
3
Messerzylinder
Knife cylinder
Vérin de couteau
(cilindro) cuchilla central
2
Scherenzylinder
Siccor cylinder
Vérin de ciseaux
(cilindro) tijera hilo superior
1
Y3
Y2
Y1
8
7
6
5
4
3
S3
S2
S1
R
P
2
1

Reference list for the circuit diagrams

A1	Controller Quick P 320MS
A2	Control panel BDF-S3D 3119
A14	Sewing head identification (OTE)
B1	Thread sensor
B2	Hybrid light barrier needle reference
H1	Sewing lamp
M1	Sewing motor
M2	Stepping motor needle
M3	Stepping motor work clamp
Q1	Main switch
S1	Pedal set value transmitter
S21	Key reference work clamp
S22	Key basic position cutter
S23	Key work clamp lowered
S24	Key basic position knife
S25	Key knife suppression
X1	Mains plug
X1A	A2 RS232 - interface 1 (BDF S3D)
X1B	A14 Sewing head identification (OTE)
X3	Incremental transmitter (sewing motor)
X4A	Stepping motor needle and hybrid light barrier
X4B	Stepping motor work clamp
X5	Inputs
X8	Sewing motor
X11A	CAN interface
X11B	Pedal set value transmitter
X13	Outputs
X15	Thread monitor
X20	Stepping motor needle

X21	Stepping motor work clamp
X23	Thread monitor
X28	Key knife suppression
X31	Key reference work clamp
X32	Key basic position cutter
X33	Key work clamp lowered
X34	Key basic position knife
X35	Key knife suppression
X40	Hybrid light barrier
X51	Solenoid valve work clamp
X52	Solenoid valve thread tension
X53	Solenoid valve knife on
X54	Solenoid valve cutter
X55	Solenoid valve hook and eye stop 1
X56	Solenoid valve hook and eye stop 2
Y1	Solenoid valve work clamp
Y2	Solenoid valve thread tension
Y3	Solenoid valve knife on
Y4	Solenoid valve cutter
Y5	Solenoid valve hook and eye stop 1
Y6	Solenoid valve hook and eye stop 2

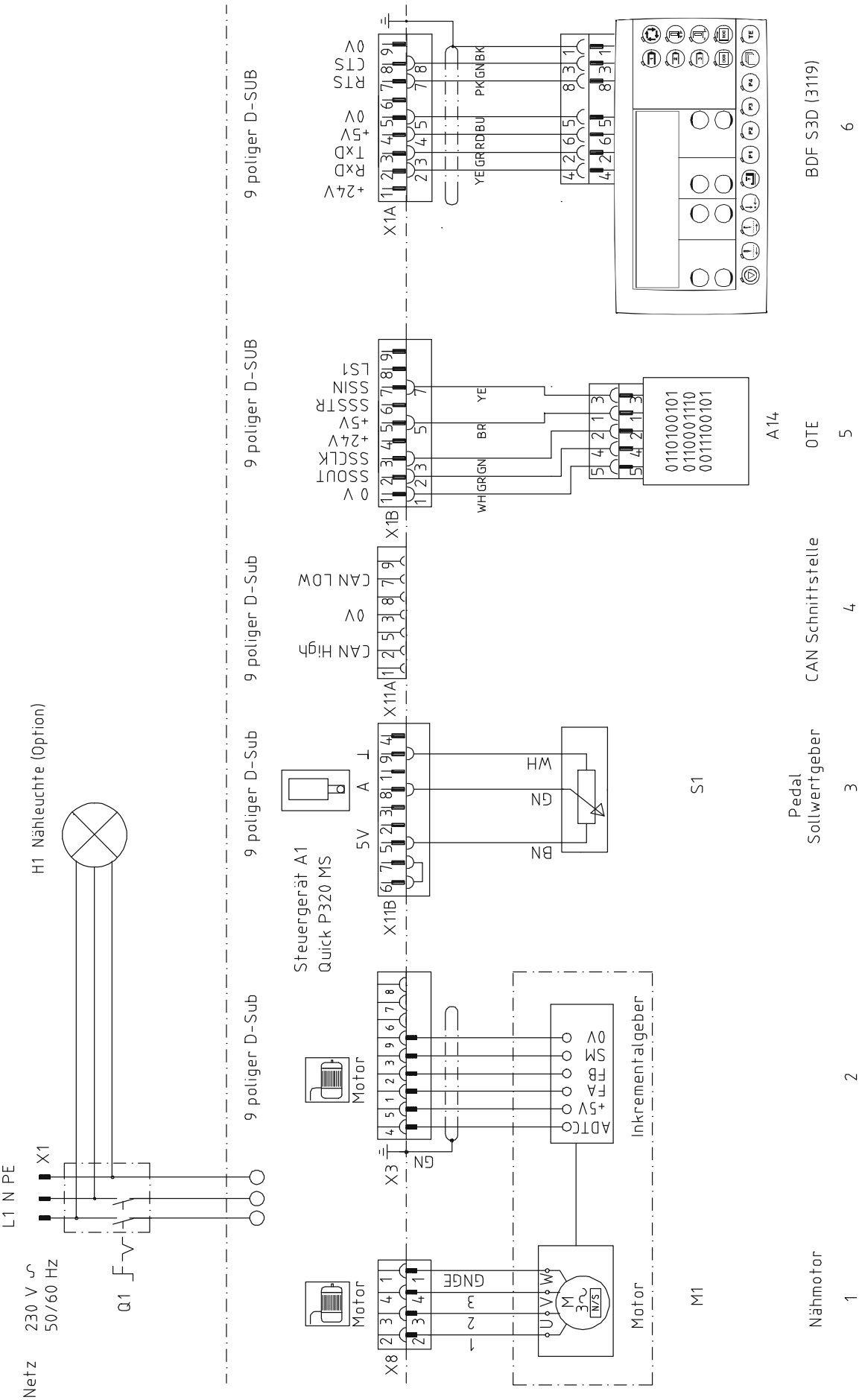
Netz
230 V ∿
50/60 Hz
Q1
L1 N PE
X1
H1 Nähleuchte (Option)
9 poliger D-Sub
Motor
X8
X3
Steuergerät A1
Quick P320 MS
X11B
X11A
X1B
X1A
5V
A
T
WH
GN
BN
CAN High
0V
CAN LOW
0 V
SSOUT
SSCLK
+24V
+5V
SSSTR
SSIN
LS1
+24V
RxD
TxD
+5V
0V
RTS
CTS
0V
GNGE
GN
ADTC
+5V
FA
FB
SM
0V
Inkrementalgeber
M1
Nähmotor
1
2
S1
Pedal
Sollwertgeber
3
CAN Schnittstelle
4
A14
OTE
5
0110100101
0110001110
0011100101
BDF S3D (3119)
6

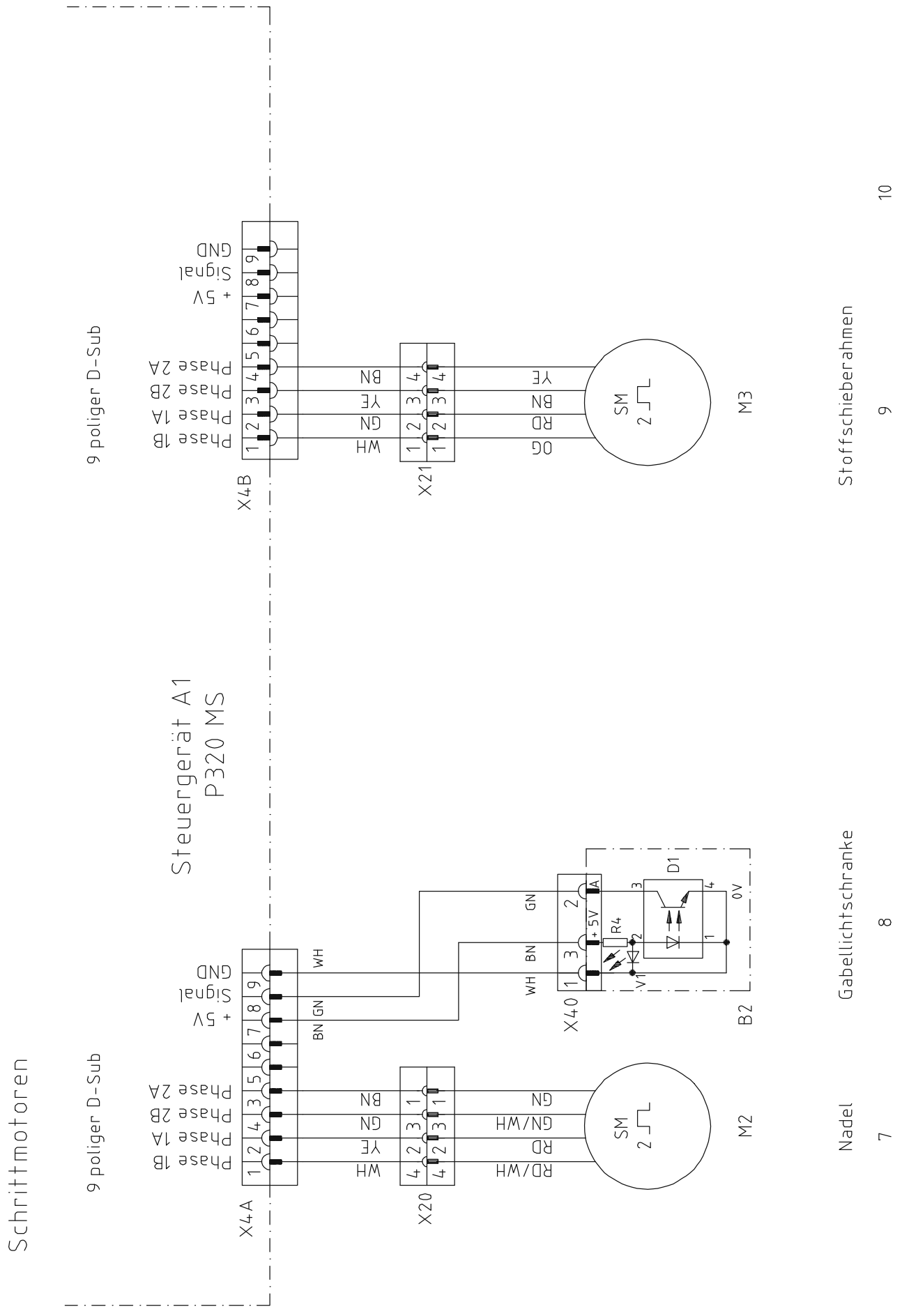
Schrittmotoren
9 poliger D-Sub
Phase 1B
Phase 1A
Phase 2B
Phase 2A
+ 5V
Signal
GND
X4A
X20
WH
YE
GN
BN
RD/WH
RD
GN/WH
GN
SM
2
M2
Nadel
7
Steuergerät A1
P320 MS
X40
+ 5V
R4
V1
D1
0V
B2
Gabellichtschranke
8
X4B
X21
OG
RD
BN
YE
M3
Stoffschieberahmen
9
10

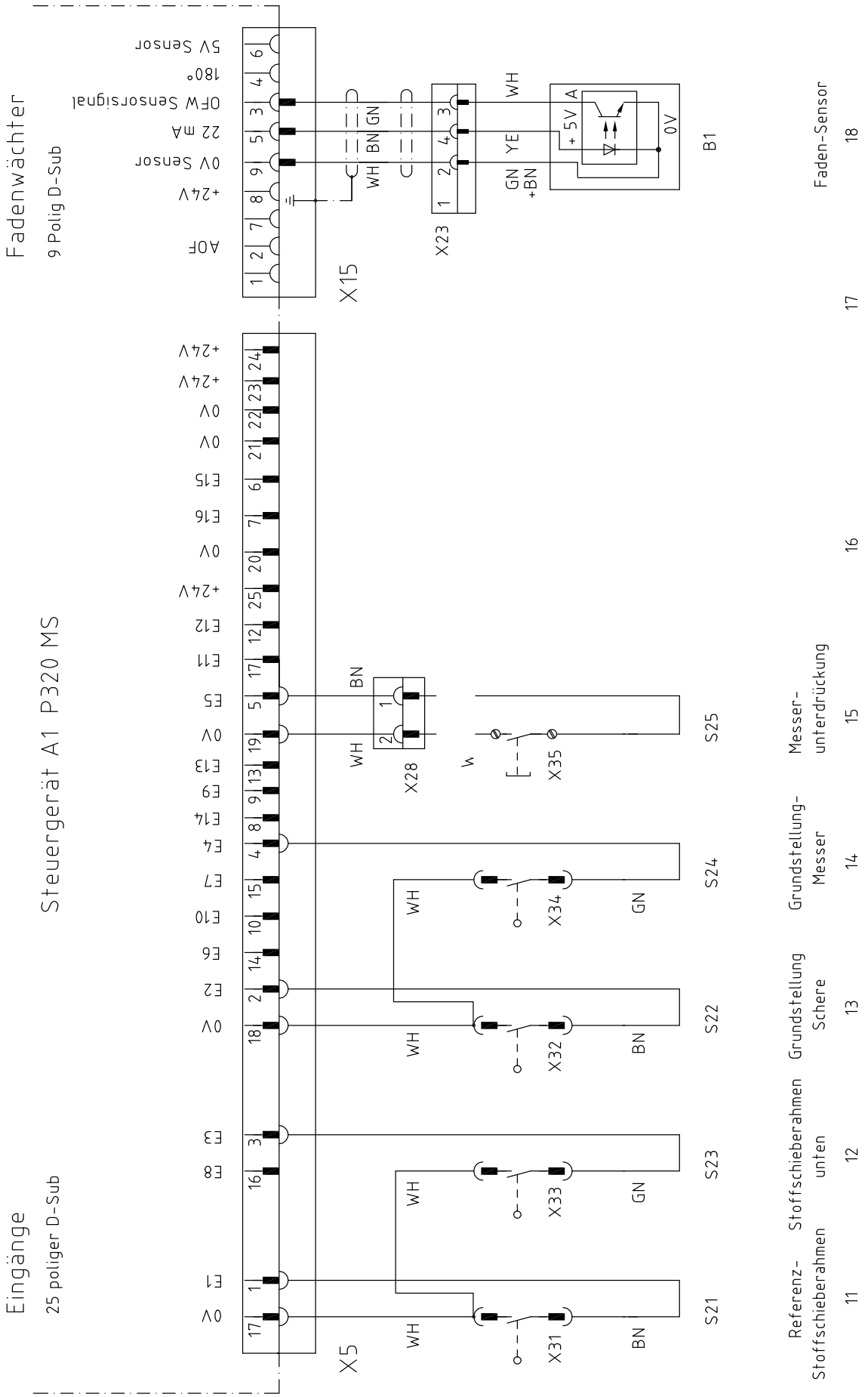
Fadenwächter
9 Polig D-Sub
AOF
+24V
0V Sensor
22 mA
OFW Sensorsignal
180°
5V Sensor
X15
X23
WH
BN
GN
YE
+ 5V
A
0V
B1
Faden-Sensor
18
17
Steuergerät A1 P320 MS
Eingänge
25 poliger D-Sub
X5
X28
X35
X34
X32
X33
X31
S25
S24
S22
S23
S21
Messer-unterdrückung
Grundstellung-Messer
Grundstellung Schere
Stoffschieberahmen unten
Referenz-Stoffschieberahmen
15
14
13
12
11
16

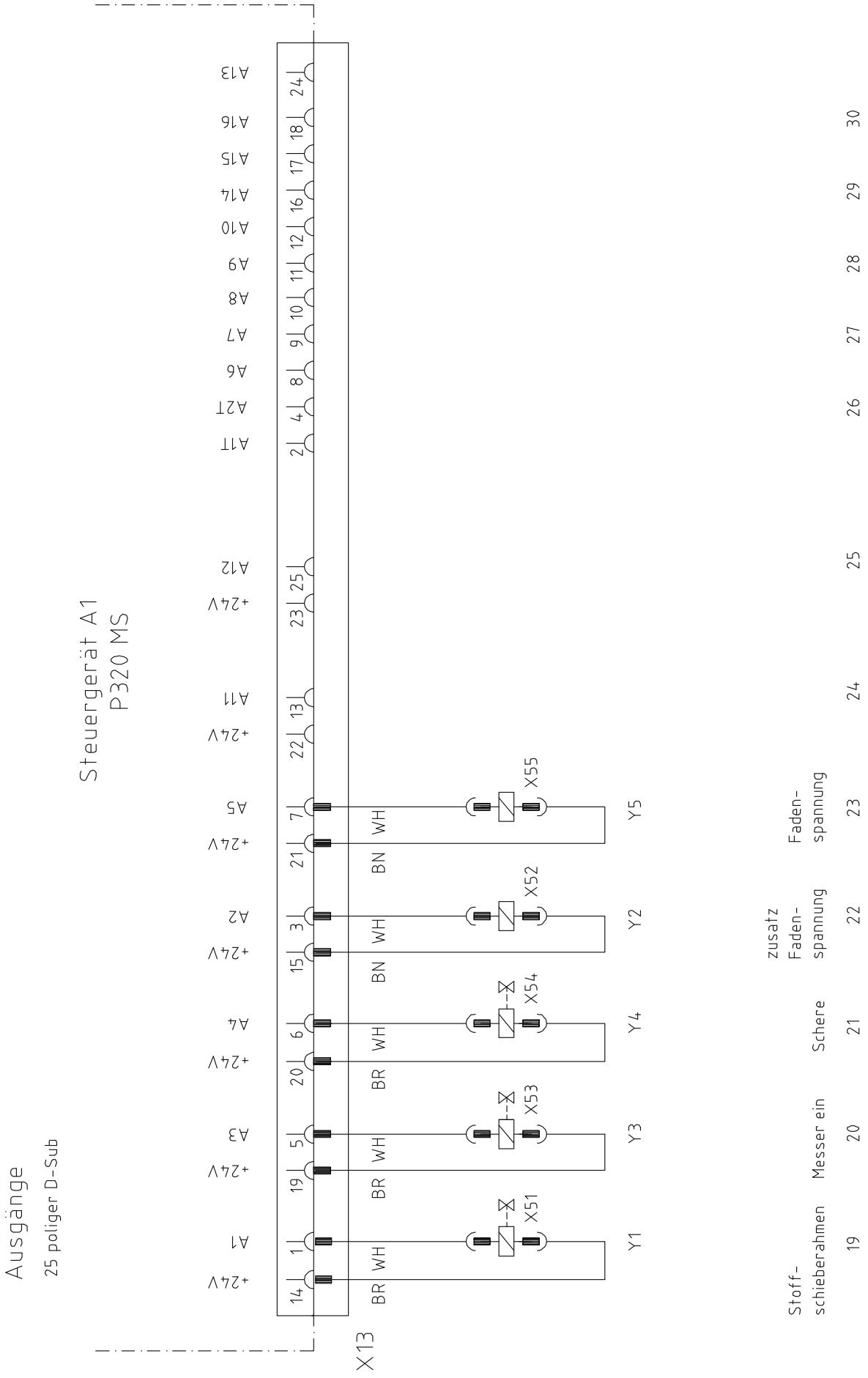
Steuergerät A1
P320 MS
Ausgänge
25 poliger D-Sub
X13
A13
A16
A15
A14
A10
A9
A8
A7
A6
A2T
A1T
A12
A11
A5
A2
A4
A3
A1
+24V
WH
BR
BN
X51
X52
X53
X54
X55
Y1
Y2
Y3
Y4
Y5
Stoff-
schieberahmen
Messer ein
Schere
zusatz
Faden-
spannung
Faden-
spannung

PFAFF® Industrial



Europäische Union
Wachstum durch Innovation – EFRE



PFAFF Industriesysteme
und Maschinen AG

Hans-Geiger-Str. 12 - IG Nord
D-67661 Kaiserslautern

Phone: +49-6301 3205 - 0
Fax: +49-6301 3205 1386
E-mail: info@pfaff-industrial.com

Hotlines:

Technical service:	+49-175/2243-101
Application consultance:	+49-175/2243-102
Spare-parts hotline:	+49-175/2243-103

Printed in Germany

© PFAFF Industriesysteme und Maschinen AG 2009, PFAFF is the exclusive trademark of VSM Group AB.PFAFF Industriesysteme und Maschinen AG is an authorized licensee of the PFAFF trademark.