PFAFF® Industrial

# 3371-1/..

**TEILELISTE**
PARTS LIST
LISTA DE PIEZAS
零件表

Diese Teileliste hat für Maschinen ab nachfolgender Seriennummer Gültigkeit:

This parts list applies to machines from the following serial numbers onwards:

Esta liste de piezas tiene validez para máquinas a partir del número de serie siguiente:

本零件表对从下列系列号起的机器有效:

# 2 780 933 →

296-12-18 981
DE / EN / ES / 中文 11.12

Alle Informationen und Abbildungen waren zum Zeitpunkt der Druckgebung auf dem neusten Stand.

Technische Änderungen vorbehalten!

Der Nachdruck, die Vervielfältigung sowie die Übersetzung - auch auszugweise - aus PFAFF-Teilelisten ist nur mit unserer vorherigen Zustimmung und mit der Quellenangabe gestattet.

At the time of printing, all information and illustrations contained in thisa document were up to date.

Subject to alteration!

The reprinting, copying or translation of PFAFF Parts lists whether in whole or in part, is only pemitted with our previous permission and with written reference to the source.

Todas las informaciones e ilustraciones de este manual estaban al día en el momento de entregarse para su impresión.

¡ Salvo modificaciones técnicas!

La reimpresión, reproducción y traducción - aunque sólo sea parcial - de las listas de piezas PFAFF sólo está permitida con nuestro permiso previo e indicando la fuente.

所有信息和图片在付印时都是最新的。

保留技术更改的权力！

全部或部分翻印、复制以及翻译PFAFF- 零件表
必须事先经由我们同意并且注明来源

PFAFF Industriesysteme
und Maschinen AG

Hans-Geiger-Str. 12 - IG Nord
D-67661 Kaiserslautern

Seite
Page
Página
页号

0 Wichtiger Hinweis ..... 5
Important note
Observación importante
重要提示

1 Basismaschine
Basic machine
Máquina básicas
基础机器

1.01 Gehäuseteile ..... 6
Housing sections
Piezas del cárter
机身零件

1.02 Kopfteile ..... 10
Needle head parts
Piezas de la cabeza
机头零件

1.03 Armteile ..... 13
Arm parts
Piezas del brazo
机臂零件

1.04 Freiarmteile ..... 18
Cylinder bed parts
Piezas del brazo al aire
悬臂部分的零件

2 Elektrische Ausrüstung
Electrical equipment
Equipo eléctrico
电设备

2.01 Kabelbaum zum Oberteil ..... 25
Cable tree to sewing head
Mazo de cables para el cabezal
上部机器电缆束

2.02 Oberteilerkennung ..... 27
Sewing head identification
Detecciòn de la parte superior
机头识别

2.03 Einbaumotor ..... 27
Built-in motor
Motor incorporado
内装式电机

Seite
Page
Página
页号

2.04 Bedienfeld ..... 28
Control panel
Panel de mandos
操作板

2.05 Sollwertgeber ..... 29
Set-point generator
Emisor del valor teóruco
给定值发生器

2.06 Motor-Hauptschalter ..... 30
Main switch
Interruptor principal
电机主开关

2.07 Steuerkasten ..... 31
Control box
Caja de mandos
控制箱

3 Garnrollenständer ..... 32
Reel stands
Portacarretes
线轴支架

4 Schmiermittel-Übersicht ..... 33
Overview of lubricants
Tabla de lubricantes
润滑剂一览

5 Index (Teilenummern / Seitenzahlen) ..... 34
Index (part numbers / page numbers)
Index (números de pieza / números de página)
注脚(零件号/页号)

6 Unterklassen-Ausstattung
Subclass parts
Composición de las subclases
子机型-设备

6.01 Nähwerkzeuge (PFAFF 3371-1/..) ..... 40
Gauge parts (PFAFF 3371-1/..)
Organos de costura (PFAFF 3371-1/..)
缝纫工具 (PFAFF 3371-1/..)

## Achtung!



Wir machen ausdrücklich darauf aufmerksam, daß Ersatz- und Zubehörteile, die nicht von uns geliefert werden, auch nicht von uns geprüft und freigegeben sind. Der Einbau und / oder die Verwendung solcher Produkte kann daher u. Umständen konstruktiv vorgegebene Eigenschaften Ihrer Maschine negativ verändern.
Für Schäden, die durch die Verwendung von Nicht-Originalteilen entstehen, übernehmen wir keine Haftung!

## Caution!



We warn you expressively that spare parts and accessories that are not supplied by us are not tested and released by us.
Fitting or using these products may therefore have negative influences on features that depend on the machine design.
We are not liable for any damage caused by the use of non-Pfaff parts!

## ¡Atención!



Se hace observar que en el caso de piezas de recambio y accesorios que no hayan sido suministrados por nosotros, quiere decir que non han sido sometidas por nuestra parte a un control y que no se les ha dado el visto bueno.
Por esta razón, el montaje y/o empleo de tales productos puede repercutir negativamente en las características previstas en su máquina.
¡Para los daños que eventualmente pudiesen presentarse al utilizar piezas no originales, no asumimos ninguna garantía!

## 注意！



我们必须明确指出，所有不是由我们供货的备件和附件都未经我们检查，也没有被我们批准使用。装入和/或使用这些产品可能在一定的情况下会对机器的设计特性造成负面改变。对由于使用非原装件所造成的损失，我们不负任何责任！

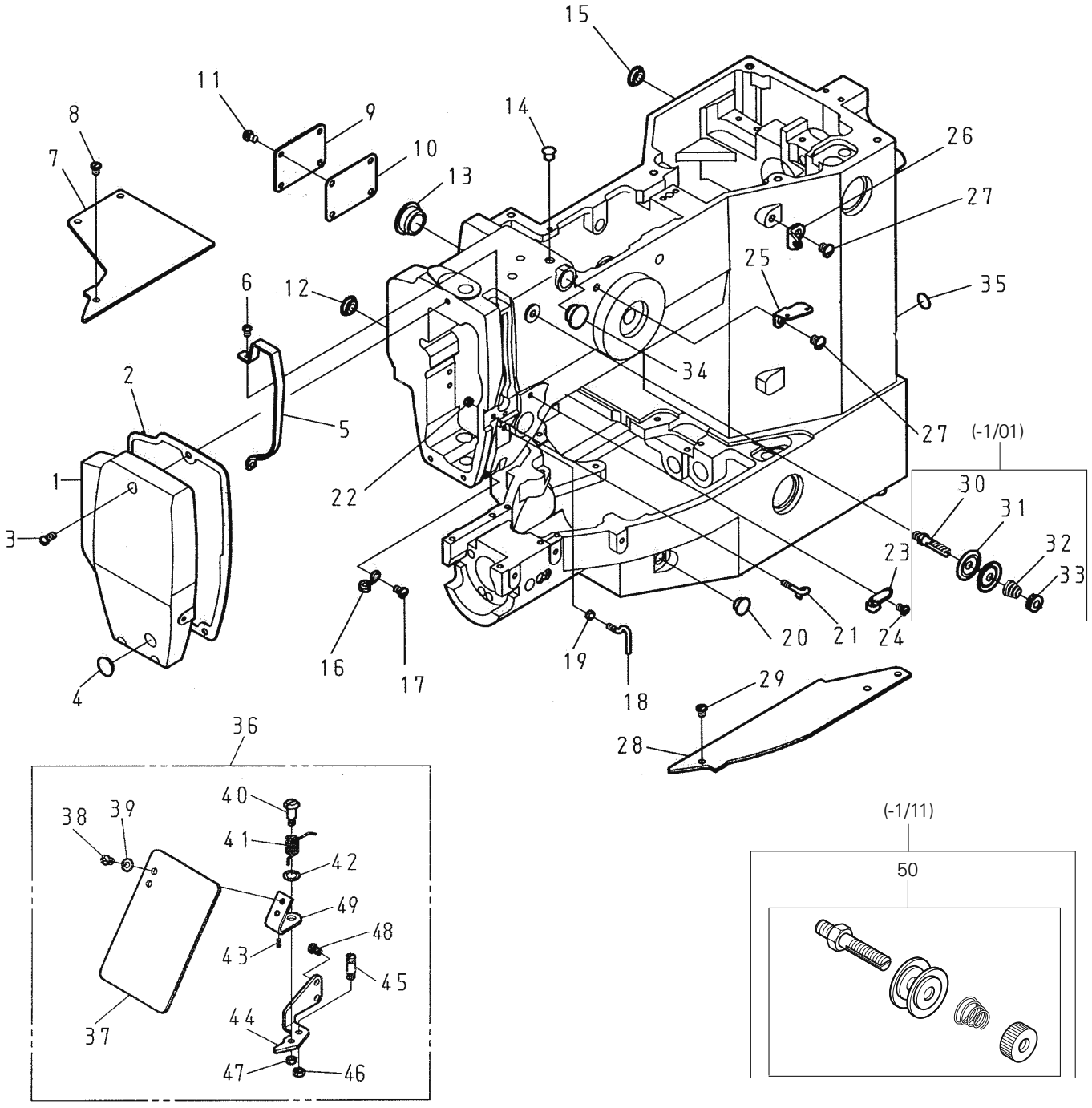
15
11
9
8
14
26
7
10
13
27
25
6
12
35
34
2
5
27
(-1/01)
1
22
30
31
3
32
23
33
20
21
24
16
17
19
18
29
4
28
36
40
38
39
41
42
49
48
43
45
37
44
47
46
(-1/11)
50

| Pos.-Nr.<br>Item No.<br>Nº de pos.<br>序号 | Teile-Nr.<br>Part No.<br>Nº de pieza<br>零件号 | Menge<br>Freq.<br>Cantida<br>数量 |
|---|---|---|
| 1 | W 3450111000 | 1 |
| 2 | W 3450114800 | 1 |
| 3 | W ZSB11028 | 3 |
| 4 | W SEN1205400 | 1 |
| 5 | W PC1083-0A | 1 |
| 6 | W ZSB09020 | 2 |
| 7 | W 3450110401 | 1 |
| 8 | W ZSB11082 | 3 |
| 9 | W 3450111100 | 1 |
| 10 | W 3450114300 | 1 |
| 11 | W ZSE11002 | 4 |
| 12 | W SEN1250400 | 2 |
| 13 | W PC1013-0A | 3 |
| 14 | W SEN0700700 | 1 |
| 15 | W SEN1250400 | 2 |
| 16 | W PC1055-0A | 1 |
| 17 | W ZSB11032 | 1 |
| 18 | W PC1053-0A | 1 |
| 19 | W ZSL09001 | 1 |
| 20 | W SEN1000500 | 1 |
| 21 | W HB1054-0A | 2 |
| 22 | W ZSL09001 | 1 |
| 23 | W 5100311600 | 1 |
| 24 | W ZSB11082 | 1 |
| 25 | W 3450313400 | 1 |

| Pos.-Nr.<br>Item No.<br>Nº de pos.<br>序号 | Teile-Nr.<br>Part No.<br>Nº de pieza<br>零件号 | Menge<br>Freq.<br>Cantida<br>数量 |
|---|---|---|
| 26 | W 3450313300 | 1 |
| 27 | W ZSB15027 | 2 |
| 28 | W 3450110801 | 1 |
| 29 | W ZSB11082 | 2 |
| 30 | W PC1026-1A | 1 |
| 31 | W HB1025-0A | 2 |
| 32 | W PC1021-1A | 1 |
| 33 | W ZSN16004 | 1 |
| 34 | W SEN140700 | 1 |
| 35 | W WARN000500 | 1 |
| 36 | W PC7150-0A | 1 |
| 37 | W H7151-0A | 1 |
| 38 | W ZSB11029 | 2 |
| 39 | W WA049006 | 2 |
| 40 | W ZSG11062 | 1 |
| 41 | W HB1088-0A | 1 |
| 42 | W WA060017 | 1 |
| 43 | W YD020006 | 1 |
| 44 | W PC7152-0A | 1 |
| 45 | W ZSK12028 | 1 |
| 46 | W ZSL12004 | 1 |
| 47 | W ZSL11007 | 1 |
| 48 | W ZSB11029 | 2 |
| 49 | W HB1086-0A | 1 |
| 50 | W PC1020-OG (-1/11) | 1 |

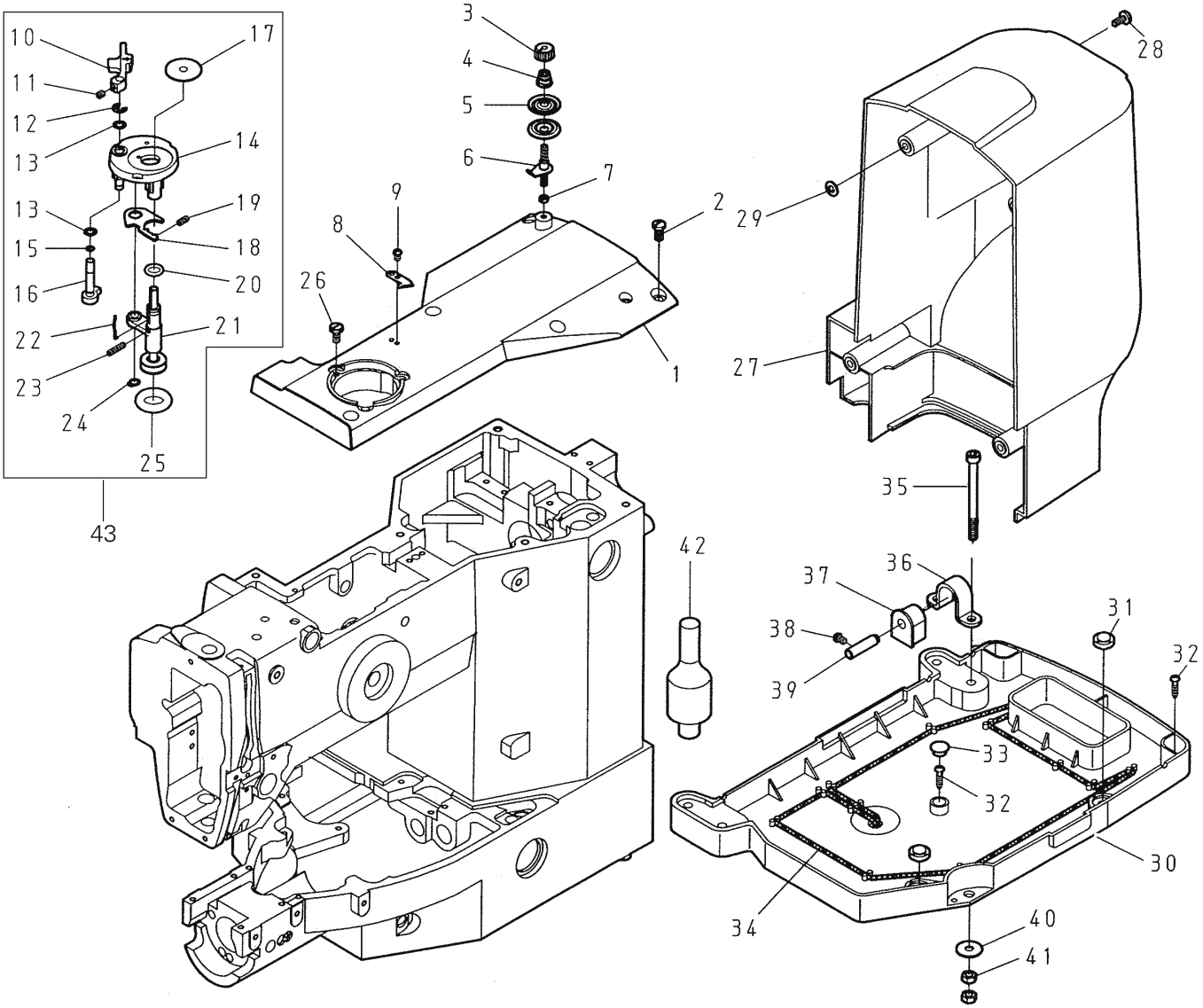
10
11
12
13
13
15
16
22
23
24
25
43
17
14
19
18
20
21
3
4
5
6
7
9
8
26
2
1
28
29
27
35
42
36
37
38
39
31
32
33
32
30
34
40
41

| Pos.-Nr.<br>Item No.<br>Nº de pos.<br>序号 | Teile-Nr.<br>Part No.<br>Nº de pieza<br>零件号 | Menge<br>Freq.<br>Cantida<br>数量 |
|---|---|---|
| 1 | W 3450110500 | 1 |
| 2 | W ZSB15005 | 6 |
| 3 | W 51003155TO | 1 |
| 4 | W 3450322900 | 1 |
| 5 | W 5100315300 | 2 |
| 6 | W 3450322600 | 1 |
| 7 | W ZSL11007 | 1 |
| 8 | W 4710320400 | 1 |
| 9 | W ZSB09020 | 1 |
| 10 | W 3450321100 | 1 |
| 11 | W ZSH11004 | 1 |
| 12 | W RE000050 | 1 |
| 13 | W 3450322800 | 2 |
| 14 | W 3450320104 | 1 |
| 15 | W OPP0040100 | 1 |
| 16 | W 3450322404 | 1 |
| 17 | W 3450322100 | 1 |
| 18 | W 3450321500 | 1 |
| 19 | W 3450321800 | 1 |
| 20 | W OPP0092270 | 1 |
| 21 | W 3450320904 | 1 |
| 22 | W 3450321200 | 1 |

| Pos.-Nr.<br>Item No.<br>Nº de pos.<br>序号 | Teile-Nr.<br>Part No.<br>Nº de pieza<br>零件号 | Menge<br>Freq.<br>Cantida<br>数量 |
|---|---|---|
| 23 | W 3450321700 | 1 |
| 24 | W RB200060 | 1 |
| 25 | W 3450322000 | 1 |
| 26 | W ZSB11114 | 3 |
| 27 | W 3450339000 | 1 |
| 28 | W ZSB11114 | 4 |
| 29 | W 3450336100 | 4 |
| 30 | W 3450350100 | 1 |
| 31 | W 3450913700 | 2 |
| 32 | W ZMT03008 | 4 |
| 33 | W SEN1000500 | 1 |
| 34 | W XA301000 | 1 |
| 35 | W ZMJ06018 | 4 |
| 36 | W 3450911700 | 2 |
| 37 | W 3450911500 | 2 |
| 38 | W ZSB11029 | 2 |
| 39 | W YA079310 | 2 |
| 40 | W WA069005 | 4 |
| 41 | W ZML06001 | 8 |
| 42 | W 3450119000 | 1 |
| 43 | W 3450320105 | 1 |
| | | |

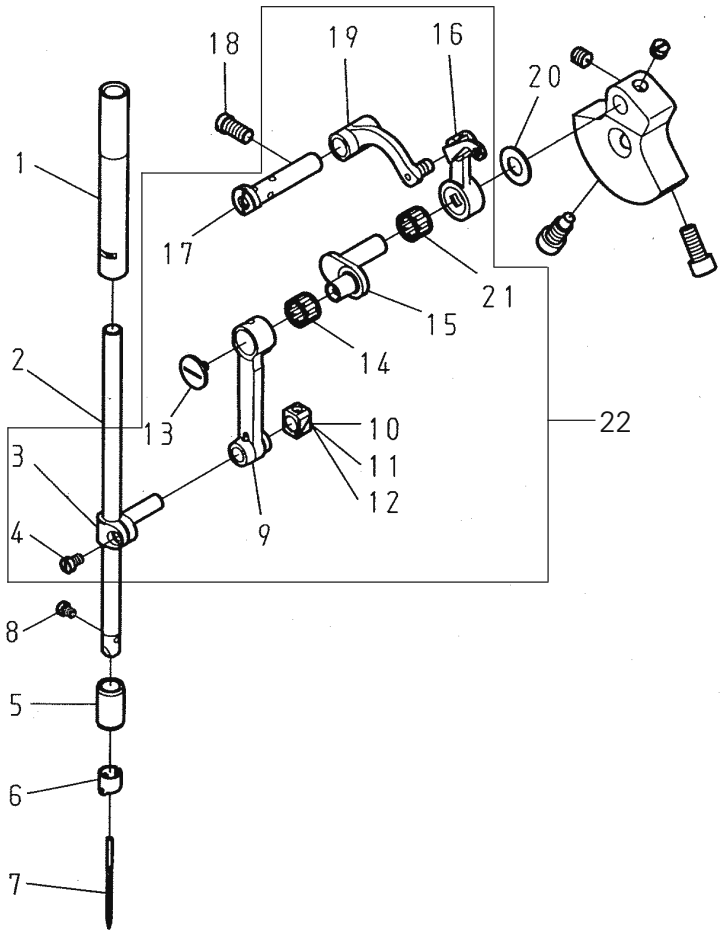


| Pos.-Nr.<br>Item No.<br>Nº de pos.<br>序号 | Teile-Nr.<br>Part No.<br>Nº de pieza<br>零件号 | Menge<br>Freq.<br>Cantida<br>數量 |
|---|---|---|
| 1 | W PC1071-0A | 1 |
| 2 | W 3450140100 | 1 |
| 3 | W 5100140900 | 1 |
| 4 | W ZSB09014 | 1 |
| 5 | W 3450140500 | 1 |
| 6 | W 3450140700 | 1 |
| 7 | Unterklasse<br>Subclasse -1/01 = 134; DPx5<br>Subclase -1/11 = 135x17; DPx17<br>子机型 | 1 |
| 9 | W 3450121000 | 1 |
| 10 | W 3450141010 | 1 |
| 11 | W 3450141020 | 1 |

| Pos.-Nr.<br>Item No.<br>Nº de pos.<br>序号 | Teile-Nr.<br>Part No.<br>Nº de pieza<br>零件号 | Menge<br>Freq.<br>Cantida<br>數量 |
|---|---|---|
| 8 | W ZSB08010 | 1 |
| 9 | W 3450121000 | 1 |
| 10 | W 3450141010 | 1 |
| 11 | W 3450141020 | 1 |
| 15 | W 3450121300 | 1 |
| 16 | W PC1085-0A | 1 |
| 17 | W 3450190700 | 1 |
| 18 | W ZSB15007 | 1 |
| 19 | W PC1064-0A | 1 |
| 20 | W WH208002 | 1 |
| 21 | W BNKT8128 | 1 |
| 22 | W 3450190105 | 1 |

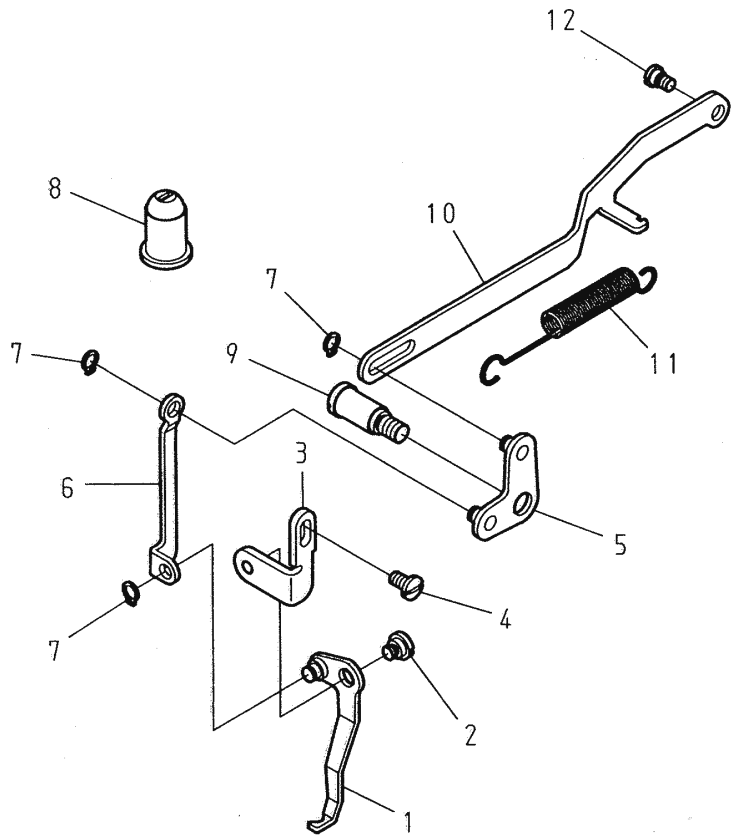


| Pos.-Nr.<br>Item No.<br>Nº de pos.<br>序号 | Teile-Nr.<br>Part No.<br>Nº de pieza<br>零件号 | Menge<br>Freq.<br>Cantida<br>數量 |
|---|---|---|
| 1 | W 3450215104 | 1 |
| 2 | W ZSG12010 | 1 |
| 3 | W PC1756-0A | 1 |
| 4 | W ZSB11032 | 1 |
| 5 | W 3450215604 | 1 |
| 6 | W PC1755-0A | 1 |

| Pos.-Nr.<br>Item No.<br>Nº de pos.<br>序号 | Teile-Nr.<br>Part No.<br>Nº de pieza<br>零件号 | Menge<br>Freq.<br>Cantida<br>數量 |
|---|---|---|
| 7 | W RB200050 | 3 |
| 8 | W PC1758-0A | 1 |
| 9 | W ZSG16041 | 1 |
| 10 | W PC1753-0A | 1 |
| 11 | W 3450216900 | 1 |
| 12 | W ZSG11025 | 1 |

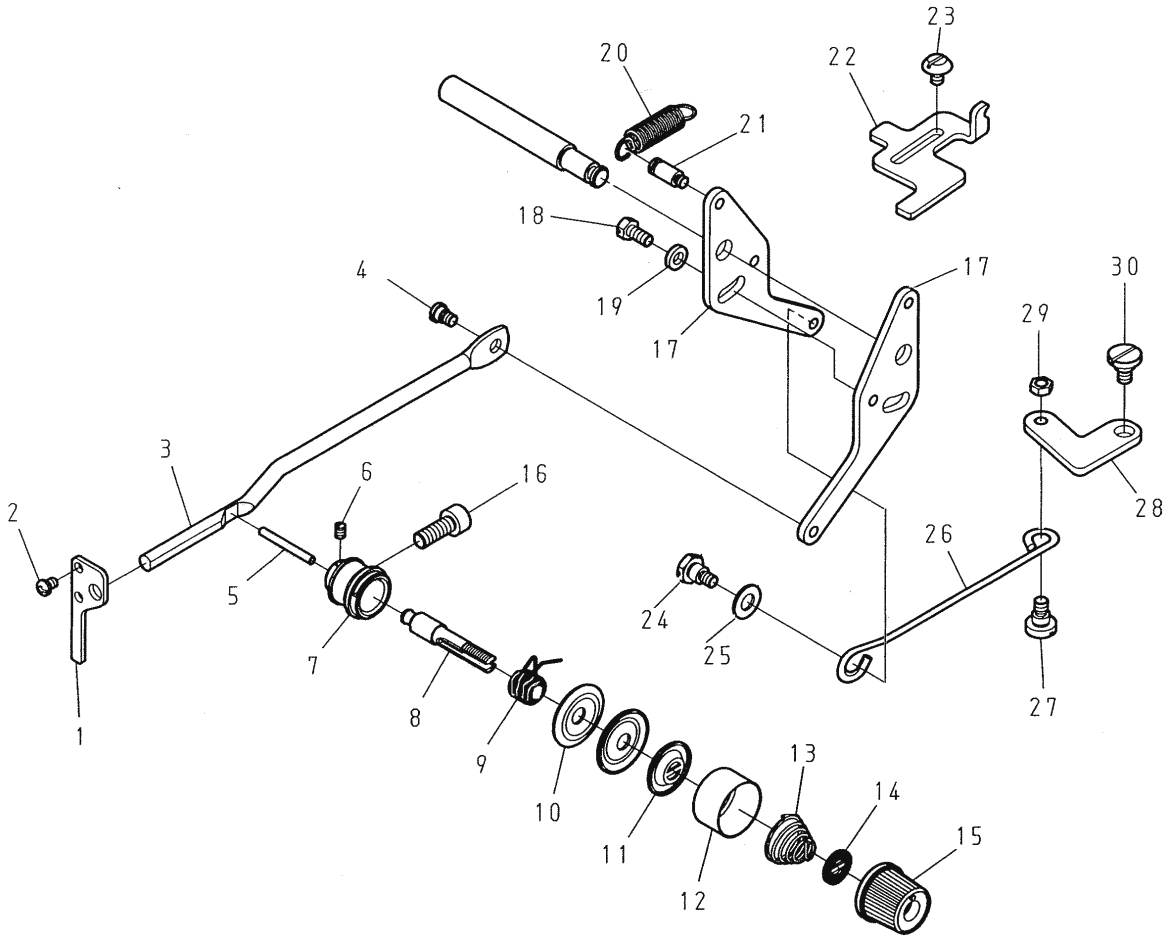


| Pos.-Nr.<br>Item No.<br>Nº de pos.<br>序号 | Teile-Nr.<br>Part No.<br>Nº de pieza<br>零件号 | Menge<br>Freq.<br>Cantida<br>數量 |
|---|---|---|
| 1 | W PC1332-0A | 1 |
| 2 | W ZSB09025 | 2 |
| 3 | W PC1330-0A | 1 |
| 4 | W ZSG11025 | 1 |
| 5 | W 3450312200 | 1 |
| 6 | W HB1028-0A | 1 |
| 7 | W PC1029-0A | 1 |
| 8 | W PC1026-0A | 1 |
| 9 | W 3450310800 | 1 |
| 10 | W HB1025-0A | 2 |
| 11 | W A1022-0A | 1 |
| 12 | W HB1022-0A | 1 |
| 13 | W EJ1021-0A | 1 |
| 14 | W H1042-0A | 1 |
| 15 | W ZSR16009 | 1 |

| Pos.-Nr.<br>Item No.<br>Nº de pos.<br>序号 | Teile-Nr.<br>Part No.<br>Nº de pieza<br>零件号 | Menge<br>Freq.<br>Cantida<br>數量 |
|---|---|---|
| 16 | W ZSJ15007 | 1 |
| 17 | W 3450313700 | 2 |
| 18 | W ZSD11001 | 1 |
| 19 | W WA040008 | 1 |
| 20 | W 3450312300 | 1 |
| 21 | W ZSK11042 | 1 |
| 22 | W 3450318100 | 1 |
| 23 | W ZSB11109 | 2 |
| 24 | W ZSG11096 | 1 |
| 25 | W WA069002 | 1 |
| 26 | W 3450312700 | 1 |
| 27 | W ZSG12013 | 1 |
| 28 | W 3450215500 | 1 |
| 29 | W ZSL12004 | 1 |
| 30 | W ZSG12071 | 1 |

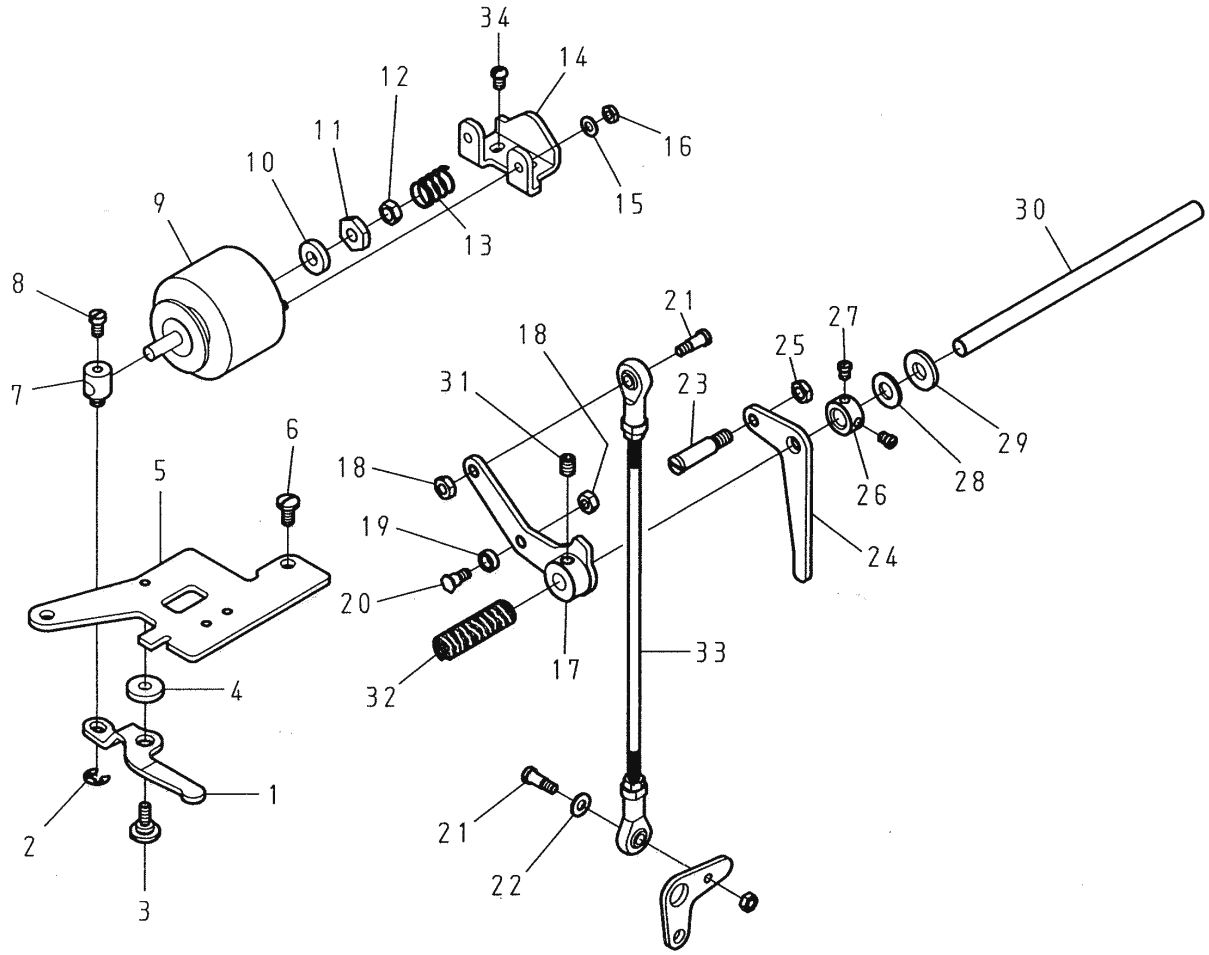


| Pos.-Nr.<br>Item No.<br>Nº de pos.<br>序号 | Teile-Nr.<br>Part No.<br>Nº de pieza<br>零件号 | Menge<br>Freq.<br>Cantida<br>數量 |
|---|---|---|
| 1 | W 3450241500 | 1 |
| 2 | W RE000050 | 1 |
| 3 | W ZSG11097 | 1 |
| 4 | W WA050016 | 1 |
| 5 | W 3450241400 | 1 |
| 6 | W ZSB12006 | 2 |
| 7 | W 51002408TO | 1 |
| 8 | W ZSB11012 | 1 |
| 9 | W 3450240600 | 1 |
| 10 | W 51002448TO | 1 |
| 11 | W ZSL16015 | 1 |
| 12 | W ZSL16005 | 1 |
| 13 | W 3450243900 | 1 |
| 14 | W 3450240900 | 1 |
| 15 | W WA0449003 | 2 |
| 16 | W ZML04002 | 2 |
| 17 | W 3450241304 | 1 |

| Pos.-Nr.<br>Item No.<br>Nº de pos.<br>序号 | Teile-Nr.<br>Part No.<br>Nº de pieza<br>零件号 | Menge<br>Freq.<br>Cantida<br>數量 |
|---|---|---|
| 18 | W ZSL11002 | 2 |
| 19 | W 3450241700 | 1 |
| 20 | W ZSG11098 | 1 |
| 21 | W ZSG11095 | 2 |
| 22 | W WA059005 | 1 |
| 23 | W 3450317200 | 1 |
| 24 | W 3450317100 | 1 |
| 25 | W ZSL15002 | 1 |
| 26 | W 3450245600 | 1 |
| 27 | W ZSB11009 | 2 |
| 28 | W 3450241600 | 1 |
| 29 | W WH208002 | 1 |
| 30 | W 3450241000 | 1 |
| 31 | W ZSH15002 | 1 |
| 32 | W 3450241200 | 1 |
| 33 | W 3450241905 | 1 |
| 34 | W ZSB11032 | 2 |

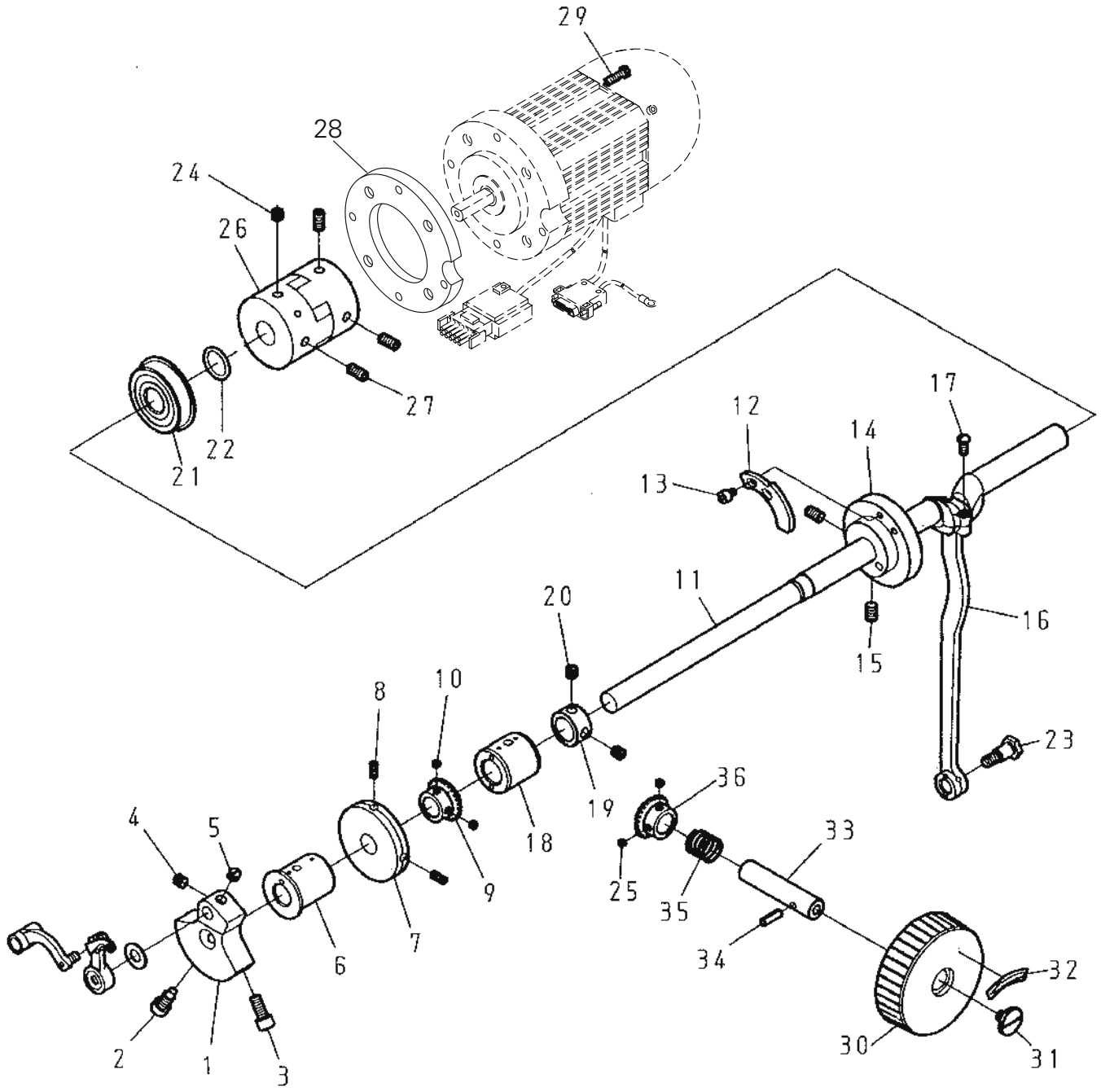
29
28
24
26
27
22
21
17
12
14
13
11
20
16
15
8
10
23
36
19
18
4
5
33
9
25
35
7
6
34
32
2
1
3
30
31

| Pos.-Nr.<br>Item No.<br>Nº de pos.<br>序号 | Teile-Nr.<br>Part No.<br>Nº de pieza<br>零件号 | Menge<br>Freq.<br>Cantida<br>数量 |
|---|---|---|
| 1 | W PC1106-0A | 1 |
| 2 | W ZSJ18001 | 1 |
| 3 | W ZSJ15002 | 1 |
| 4 | W ZSA16025 | 1 |
| 5 | W ZSA16008 | 1 |
| 6 | W 3450120200 | 1 |
| 7 | W 3450320500 | 1 |
| 8 | W ZSA11016 | 2 |
| 9 | W 3450123800 | 1 |
| 10 | W ZSA11009 | 2 |
| 11 | W 3450120100 | 1 |
| 12 | W 3450310700 | 1 |
| 13 | W ZMJ04008 | 2 |
| 14 | W 3450240500 | 1 |
| 15 | W ZSH16004 | 2 |
| 16 | W 3450181800 | 1 |
| 17 | W ZSB11028 | 2 |
| 18 | W 3450120300 | 1 |
| 19 | W 5100122600 | 1 |
| 20 | W ZSA16025 | 2 |
| 21 | W BB6302ZZNR | 1 |

| Pos.-Nr.<br>Item No.<br>Nº de pos.<br>序号 | Teile-Nr.<br>Part No.<br>Nº de pieza<br>零件号 | Menge<br>Freq.<br>Cantida<br>数量 |
|---|---|---|
| 22 | W OP001600 | 1 |
| 23 | W ZSG16042 | 1 |
| 24 | W ZMH06008 | 1 |
| 25 | W ZSA11009 | 2 |
| 26 | W 3450122700 | 1 |
| 27 | W ZMH06005 | 3 |
| 28 | W 3450720203 | 1 |
| 29 | W ZSB11010 | 4 |
| 30 | W 3450123600 | 1 |
| 31 | W ZMB06018 | 1 |
| 32 | W 3450335400 | 1 |
| 33 | W 3450123400 | 1 |
| 34 | W YD040014A | 1 |
| 35 | W 3450123500 | 1 |
| 36 | W 3450123700 | 1 |
| | | |
| | | |
| | | |
| | | |
| | | |
| | | |

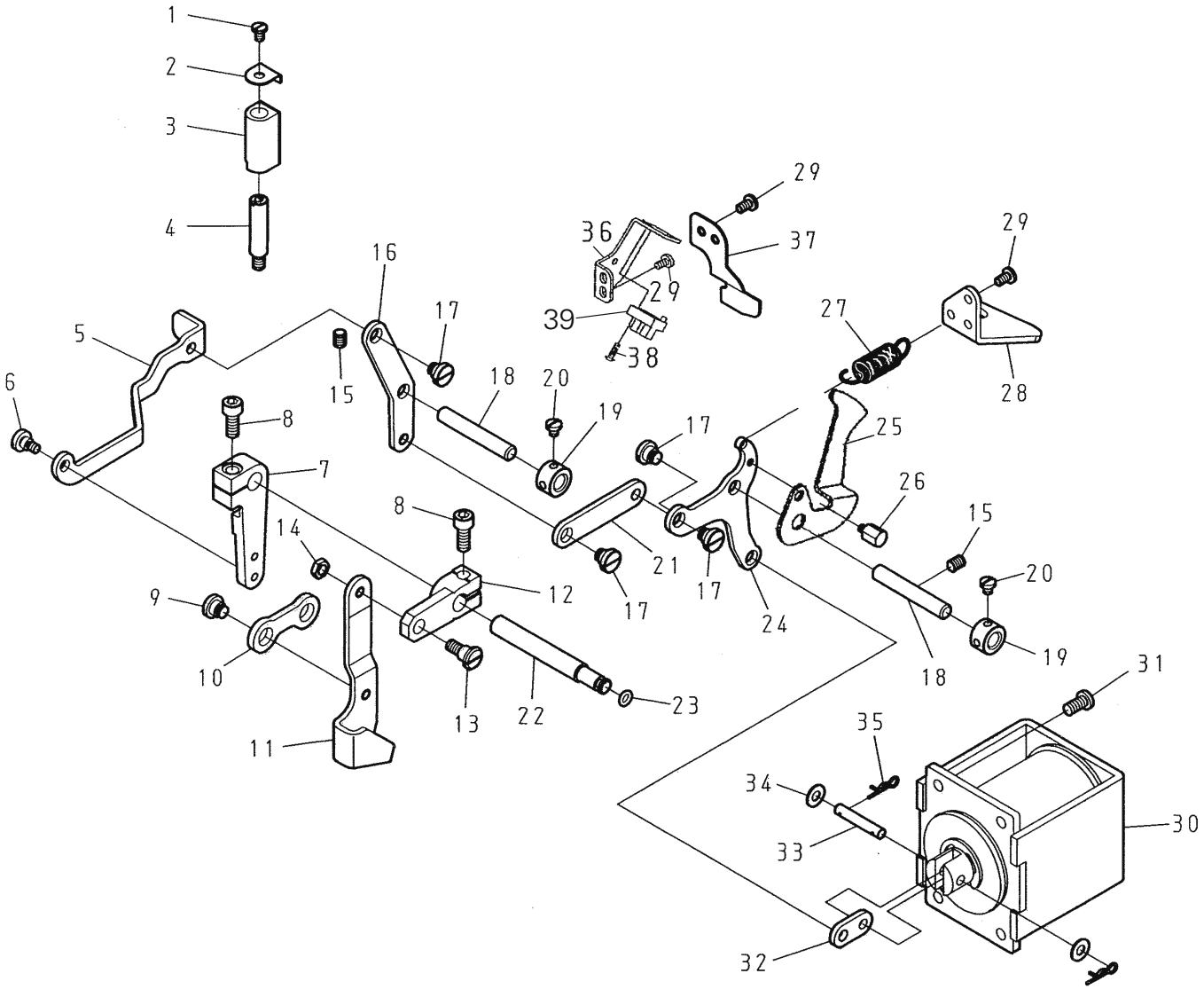
1
2
3
4
5
6
7
8
9
10
11
12
13
14
15
16
17
18
19
20
21
22
23
24
25
26
27
28
29
30
31
32
33
34
35
36
37
38
39

| Pos.-Nr.<br>Item No.<br>Nº de pos.<br>序号 | Teile-Nr.<br>Part No.<br>Nº de pieza<br>零件号 | Menge<br>Freq.<br>Cantida<br>数量 |
|---|---|---|
| 1 | W ZSB11082 | 1 |
| 2 | W 3450157700 | 1 |
| 3 | W 3450155800 | 1 |
| 4 | W 5100351700 | 1 |
| 5 | W 3450156000 | 1 |
| 6 | W ZSG12013 | 1 |
| 7 | W PC1751-0A | 1 |
| 8 | W ZMJ06002 | 2 |
| 9 | W ZSG15027 | 2 |
| 10 | W 3450157500 | 1 |
| 11 | W 3450155100 | 1 |
| 12 | W 3450157300 | 1 |
| 13 | W ZSG15069 | 1 |
| 14 | W ZSL15002 | 1 |
| 15 | W ZSH15002 | 2 |
| 16 | W 3450156100 | 1 |
| 17 | W ZSG16025 | 4 |
| 18 | W 3450156400 | 2 |
| 19 | W 5100184900 | 2 |
| 20 | W ZSB11008 | 4 |

| Pos.-Nr.<br>Item No.<br>Nº de pos.<br>序号 | Teile-Nr.<br>Part No.<br>Nº de pieza<br>零件号 | Menge<br>Freq.<br>Cantida<br>数量 |
|---|---|---|
| 21 | W 3450156200 | 1 |
| 22 | W 3450156300 | 1 |
| 23 | W OPP00500 | 1 |
| 24 | W 3450157400 | 1 |
| 25 | W 3450156803 | 1 |
| 26 | W ZMD04010 | 1 |
| 27 | W 3450156700 | 1 |
| 28 | W 3450157000 | 1 |
| 29 | W ZSB11032 | 6 |
| 30 | W 3450155605 | 1 |
| 31 | W ZSB15014 | 4 |
| 32 | W 3450157800 | 1 |
| 33 | W 3450156600 | 1 |
| 34 | W WA050015 | 2 |
| 35 | W YR000060 | 2 |
| 36 | W 3450156903 | 1 |
| 37 | W 3450157600 | 1 |
| 38 | W ZMB03011 | 1 |
| 39 | W 3450606600 | 1 |
| | | |

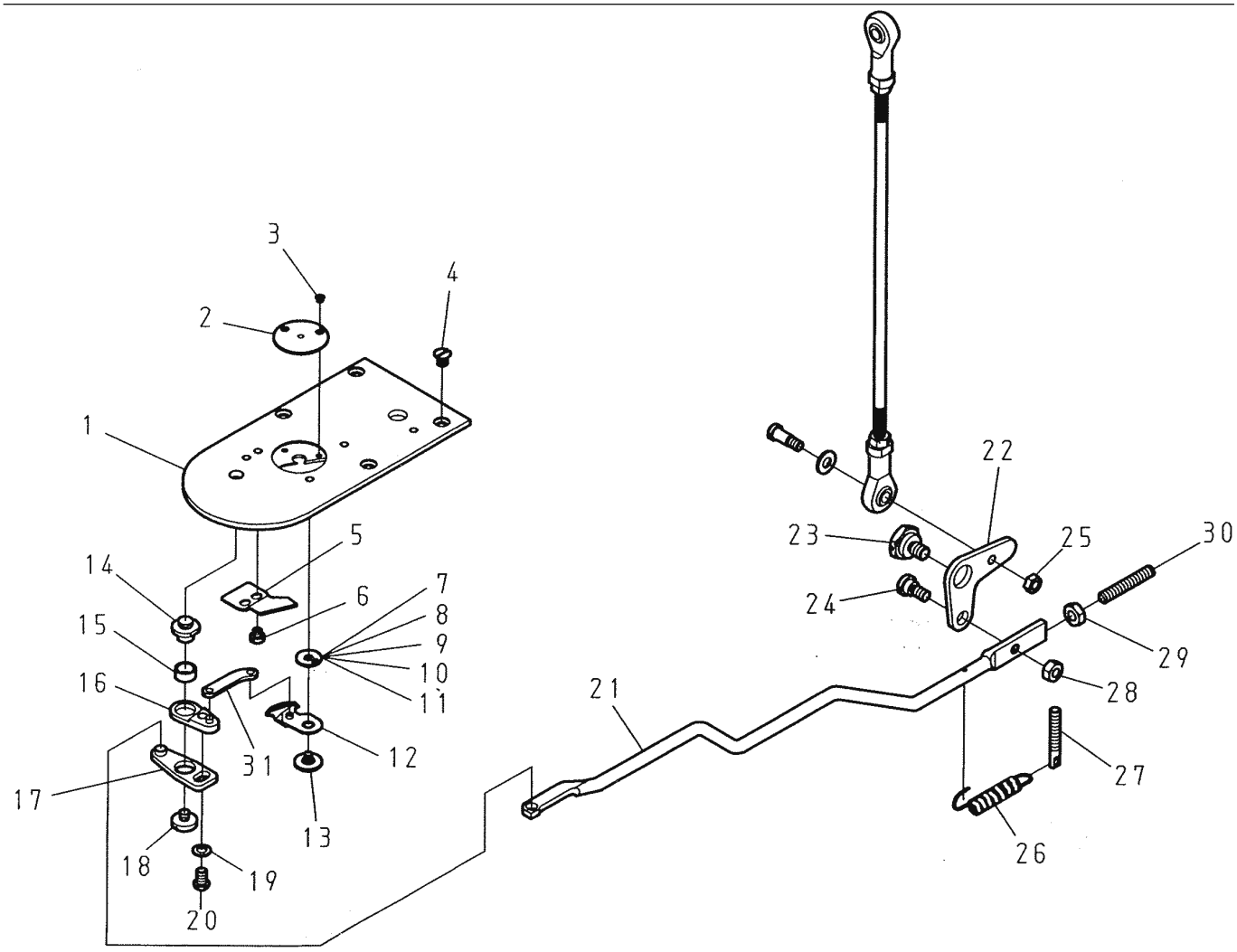


| Pos.-Nr.<br>Item No.<br>Nº de pos.<br>序号 | Teile-Nr.<br>Part No.<br>Nº de pieza<br>零件号 | Menge<br>Freq.<br>Cantida<br>數量 |
|---|---|---|
| 1 | W PC6050-0A | 1 |
| 2 | W 3450112500 (-1/01) | 1 |
| | W PC6049-OH (-1/11) | 1 |
| 3 | W ZSC06011 | 2 |
| 4 | W ZSC11019 | 4 |
| 5 | W PC6111-0A | 1 |
| 6 | W ZSB09040 | 2 |
| 7 | W 3450243210 (0,4 mm) | 1 |
| 8 | W 3450243220 (0,5 mm) | 1 |
| 9 | W 3450243230 (0,6 mm) | 1 |
| 10 | W 3450243240 (0,7 mm) | 1 |
| 11 | W 3450243250 (0,8 mm) | 1 |
| 12 | W 3450243005 | 1 |
| 13 | W ZSG09037 | 1 |
| 14 | W ZSK16036 | 1 |
| 15 | W PC6118-0A | 1 |

| Pos.-Nr.<br>Item No.<br>Nº de pos.<br>序号 | Teile-Nr.<br>Part No.<br>Nº de pieza<br>零件号 | Menge<br>Freq.<br>Cantida<br>數量 |
|---|---|---|
| 16 | W 3450245005 | 1 |
| 17 | W 3450243405 | 1 |
| 18 | W ZSB11043 | 1 |
| 19 | W WA040010 | 1 |
| 20 | W ZSB11029 | 1 |
| 21 | W 3450243700 | 1 |
| 22 | W 3450242000 | 1 |
| 23 | W ZSG15068 | 1 |
| 24 | W ZSG12066 | 1 |
| 25 | W ZSL11002 | 1 |
| 26 | W 3450242200 | 1 |
| 27 | W ZSK11021 | 1 |
| 28 | W ZSL12004 | 1 |
| 29 | W ZML05001 | 1 |
| 30 | W ZMH05011 | 1 |
| 31 | W 3450243300 | 1 |

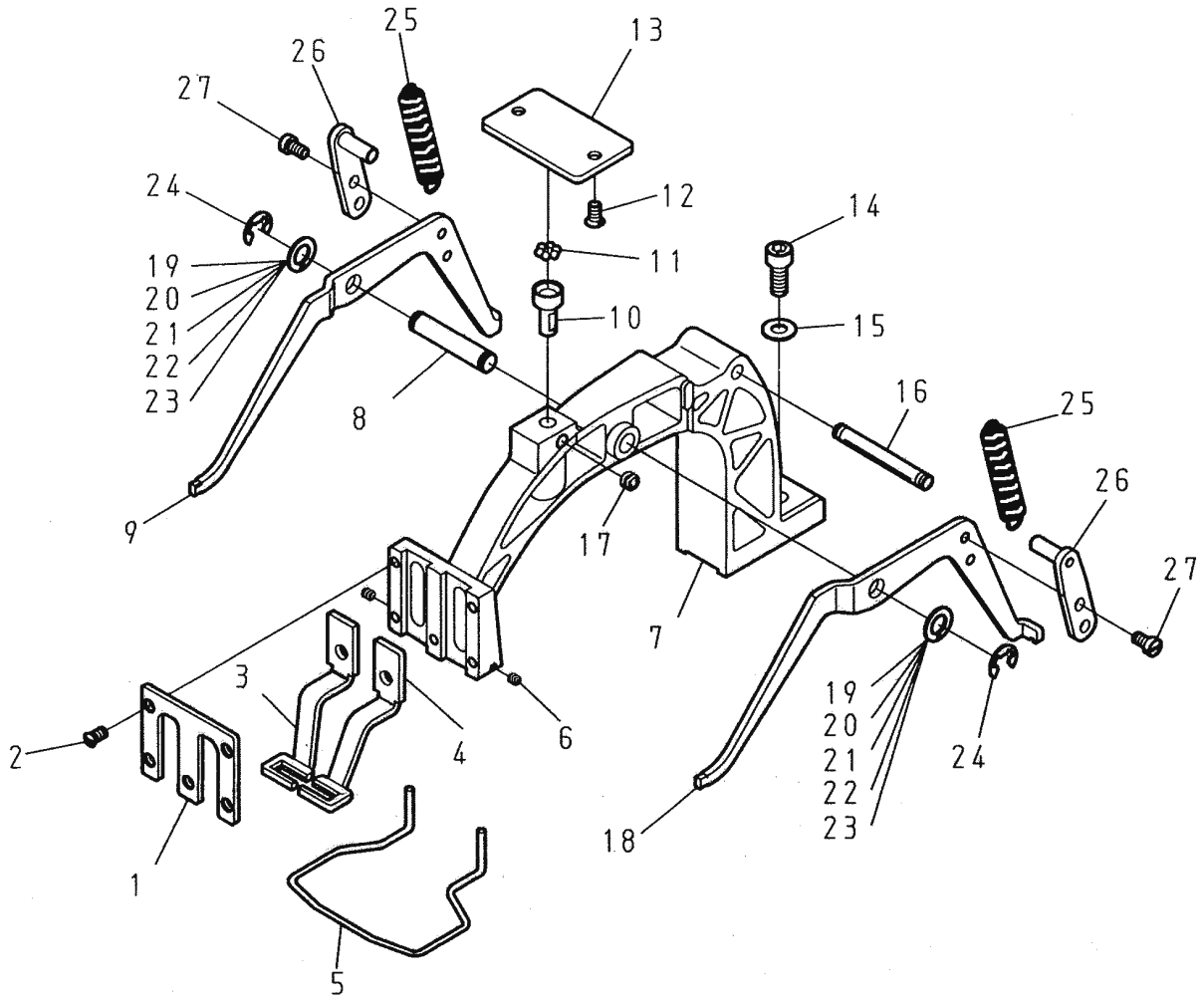


| Pos.-Nr.<br>Item No.<br>Nº de pos.<br>序号 | Teile-Nr.<br>Part No.<br>Nº de pieza<br>零件号 | Menge<br>Freq.<br>Cantida<br>数量 |
|---|---|---|
| 1 | W PC4186-0A | 1 |
| 2 | W ZSC11017 | 5 |
| 3 | W PC4185-0A (-1/01) | 1 |
| | W 34501532A1 (-1/11) | 1 |
| 4 | W PC4185-1A (-1/01) | 1 |
| | W 34501532A2 (-1/11) | 1 |
| 5 | W 3450141200 | 1 |
| 6 | W ZSA08003 | 2 |
| 7 | W PC4188-0A | 1 |
| 8 | W PC4190-0A | 1 |
| 9 | W PC4182-0A | 1 |
| 10 | W PC4183-0A | 1 |
| 11 | W OBS00080 | 7 |
| 12 | W ZSC11001 | 2 |
| 13 | W PC1206-0A | 1 |
| 14 | W ZMJ06002 | 1 |

| Pos.-Nr.<br>Item No.<br>Nº de pos.<br>序号 | Teile-Nr.<br>Part No.<br>Nº de pieza<br>零件号 | Menge<br>Freq.<br>Cantida<br>数量 |
|---|---|---|
| 15 | W WA069001 | 1 |
| 16 | W PC4192-0A | 1 |
| 17 | W ZSA15021 | 1 |
| 18 | W PC4181-0A | 1 |
| 19 | W 3450158410 | 2 |
| 20 | W 3450158420 | 2 |
| 21 | W 3450158430 | 2 |
| 22 | W 3450158440 | 2 |
| 23 | W 3450158450 | 2 |
| 24 | W RE000070 | 2 |
| 25 | W 3450158300 | 2 |
| 26 | W PC4184-0A | 2 |
| 27 | W ZSB11022 | 4 |
| | | |
| | | |
| | | |

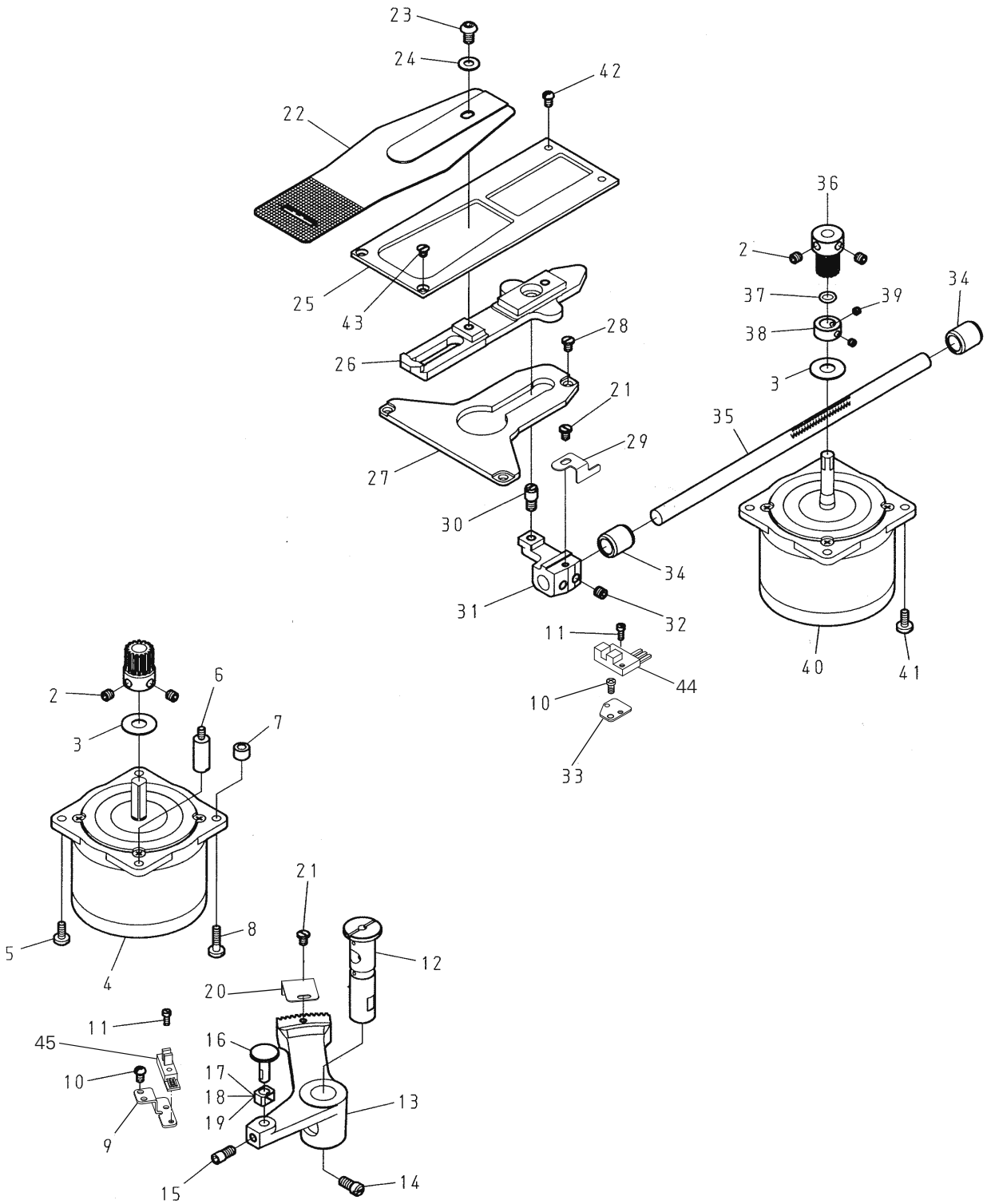
23
24
42
22
25
43
26
28
21
29
27
30
31
32
34
35
36
2
37
39
38
3
34
40
41
11
44
10
33
2
6
3
7
5
8
4
21
12
20
11
45
16
17
10
18
19
9
13
15
14

| Pos.-Nr.<br>Item No.<br>Nº de pos.<br>序号 | Teile-Nr.<br>Part No.<br>Nº de pieza<br>零件号 | Menge<br>Freq.<br>Cantida<br>數量 |
|---|---|---|
| 1 | W 3450257800 | 1 |
| 2 | W ZMH06008 | 4 |
| 3 | W 3450740300 | 2 |
| 4 | W 3450730100-B | 1 |
| 5 | W ZSB11114 | 3 |
| 6 | W 3450740100 | 1 |
| 7 | W 3450740200 | 1 |
| 8 | W ZSB11066 | 1 |
| 9 | W 3450257003 | 1 |
| 10 | W ZSB11029 | 4 |
| 11 | W ZMB03011 | 2 |
| 12 | W PC4271-0A | 1 |
| 13 | W 3450255300 | 1 |
| 14 | W ZSB15046 | 1 |
| 15 | W ZSJ15001 | 1 |
| 16 | W PC6062-0A | 1 |
| 17 | W 3450141010 | 1 |
| 18 | W 3450141020 | 1 |
| 19 | W 3450141030 | 1 |
| 20 | W 3450257203 | 1 |
| 21 | W ZSB11082 | 2 |
| 22 | W PC6051-0A (-1/01) | 1 |
| 22 | W 34501532A3 (-1/11) | 1 |

| Pos.-Nr.<br>Item No.<br>Nº de pos.<br>序号 | Teile-Nr.<br>Part No.<br>Nº de pieza<br>零件号 | Menge<br>Freq.<br>Cantida<br>數量 |
|---|---|---|
| 23 | W ZMQ06003 | 1 |
| 24 | W WA069001 | 1 |
| 25 | W 3450256200 | 1 |
| 26 | W 3450257700 | 1 |
| 27 | W 3450256500 | 1 |
| 28 | W ZSB11082 | 3 |
| 29 | W 3450257303 | 1 |
| 30 | W PC4272-0A | 1 |
| 31 | W 3450255700 | 1 |
| 32 | W ZSH16001 | 2 |
| 33 | W 3450257103 | 1 |
| 34 | W 3450257600 | 2 |
| 35 | W 3450256000 | 1 |
| 36 | W 3450257900 | 1 |
| 37 | W OPP00680 | 1 |
| 38 | W 3450740400 | 1 |
| 39 | W ZSA11004 | 2 |
| 40 | W 3450730200-B | 1 |
| 41 | W ZSB11114 | 4 |
| 42 | W ZSB11029 | 2 |
| 43 | W ZSC11019 | 2 |
| 44 | W 3450606600 | 1 |
| 45 | W 3450606500 | 1 |

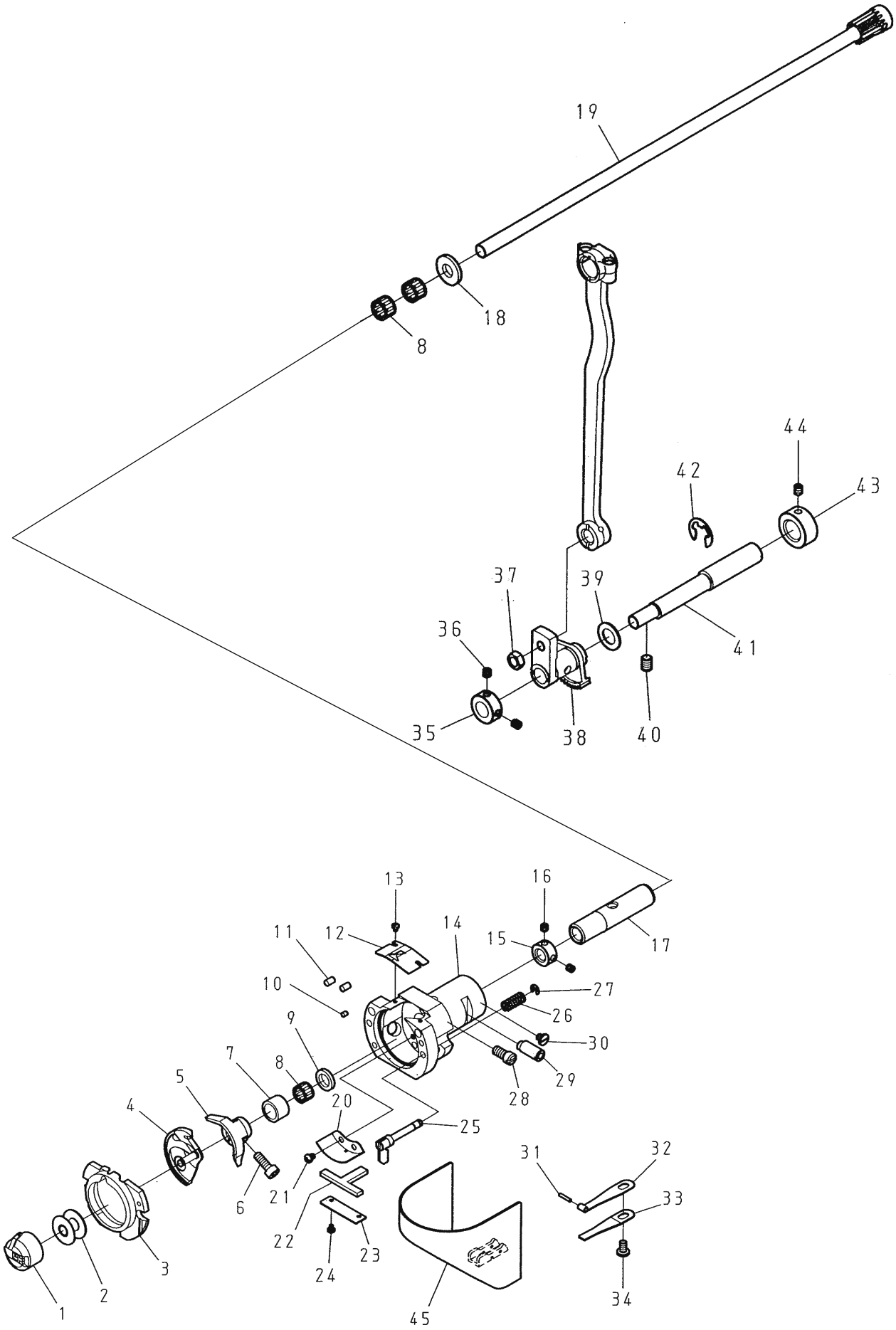
19
18
8
44
42
43
37
39
36
41
35
38
40
13
16
11
12
14
15
17
10
27
26
9
30
7
8
29
5
20
28
4
25
31
32
6
21
33
22
23
24
3
2
1
45
34

| Pos.-Nr.<br>Item No.<br>Nº de pos.<br>序号 | Teile-Nr.<br>Part No.<br>Nº de pieza<br>零件号 | Menge<br>Freq.<br>Cantida<br>數量 |
|---|---|---|
| 1 | W 3450185300 | 1 |
| 2 | W 3450183200 | 1 |
| 3 | W 3450185804 | 1 |
| 4 | W 3450181300 | 1 |
| 5 | W PC6106-0A | 1 |
| 6 | W ZSJ12006 | 1 |
| 7 | W 3450180300 | 1 |
| 8 | W BN081110 | 3 |
| 9 | W WA090007 | 1 |
| 10 | W XB103002 | 1 |
| 11 | W XB104001 | 2 |
| 12 | W PC6101-0A | 1 |
| 13 | W ZSB06019 | 2 |
| 14 | W 3450181400 | 1 |
| 15 | W 3450245600 | 1 |
| 16 | W ZSA11011 | 2 |
| 17 | W PC4013-0A | 1 |
| 18 | W WA080015 | 1 |
| 19 | W 3450180104 | 1 |
| 20 | W PC6107-0A | 1 |
| 21 | W ZSB09024 | 2 |
| 22 | W XB400053 | 1 |
| 23 | W 3450352800 | 1 |

| Pos.-Nr.<br>Item No.<br>Nº de pos.<br>序号 | Teile-Nr.<br>Part No.<br>Nº de pieza<br>零件号 | Menge<br>Freq.<br>Cantida<br>數量 |
|---|---|---|
| 24 | W ZSB06019 | 2 |
| 25 | W 3450185604 | 2 |
| 26 | W 3450185700 | 2 |
| 27 | W RE000030 | 2 |
| 28 | W ZSB15046 | 1 |
| 29 | W 3450185000 | 1 |
| 30 | W ZSB11093 | 1 |
| 31 | W YA020100 | 1 |
| 32 | W PC6032-0A | 1 |
| 33 | W PC6031-0A | 1 |
| 34 | W ZSB11032 | 1 |
| 35 | W 3450184700 | 1 |
| 36 | W ZSA11012 | 2 |
| 37 | W ZSL16005 | 1 |
| 38 | W 3450182500 | 1 |
| 39 | W WH210012 | 1 |
| 40 | W ZSH15002 | 1 |
| 41 | W 3450182300 | 1 |
| 42 | W RE000090 | 1 |
| 43 | W 34550189100 | 1 |
| 44 | W ZSA11005 | 1 |
| 45 | W PC6030-0A | 1 |
| | | |

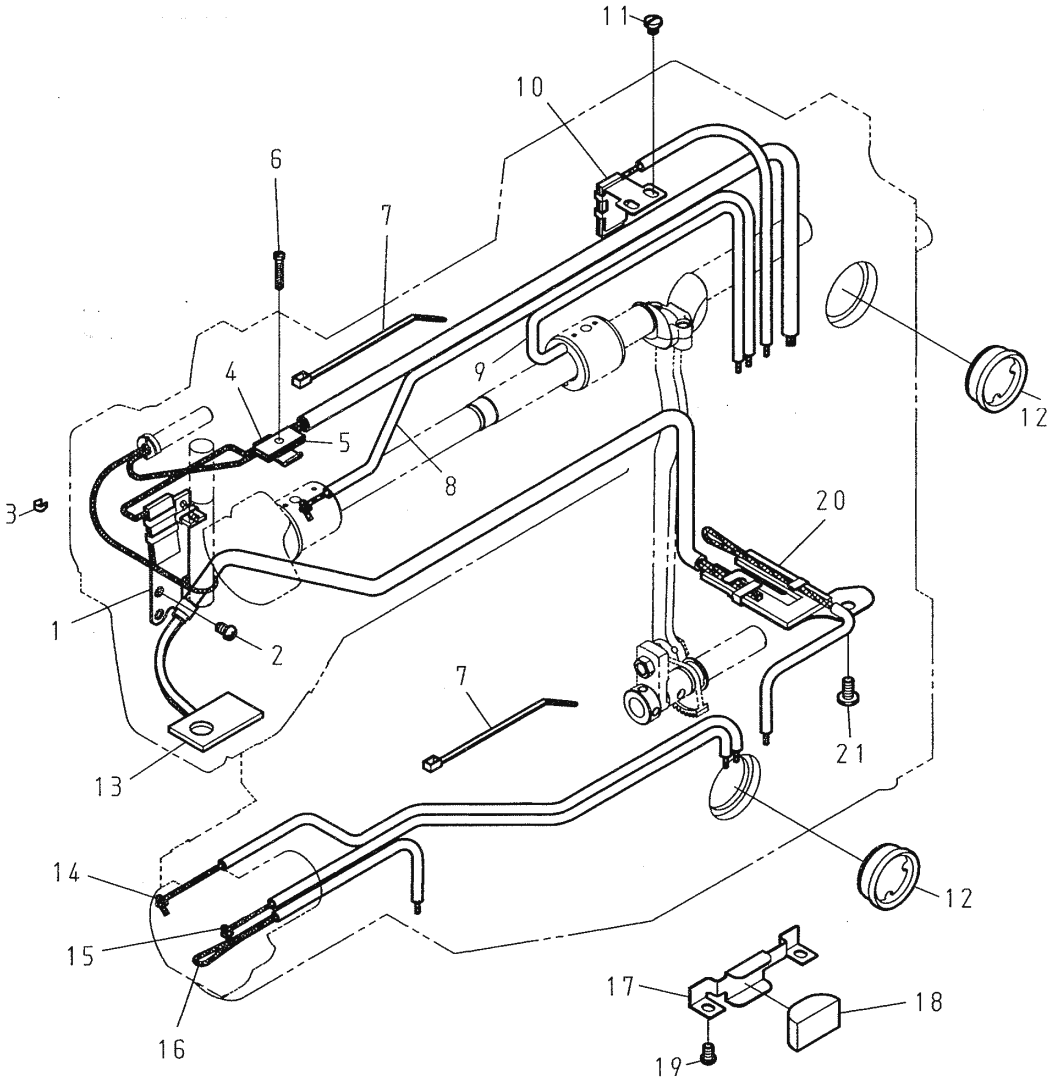


| Pos.-Nr.<br>Item No.<br>Nº de pos.<br>序号 | Teile-Nr.<br>Part No.<br>Nº de pieza<br>零件号 | Menge<br>Freq.<br>Cantida<br>數量 |
|---|---|---|
| 1 | W 3450352905 | 1 |
| 2 | W ZSB11029 | 2 |
| 3 | W PC1144-0A | 2 |
| 4 | W PC1145-0A | 1 |
| 5 | W XB400012 | 1 |
| 6 | W ZSB09048 | 1 |
| 7 | W RU010100 | 2 |
| 8 | W 3450357505 | 1 |
| 9 | W 3450357605 | 1 |
| 10 | W 3450352605 | 1 |
| 11 | W ZSB11008 | 2 |

| Pos.-Nr.<br>Item No.<br>Nº de pos.<br>序号 | Teile-Nr.<br>Part No.<br>Nº de pieza<br>零件号 | Menge<br>Freq.<br>Cantida<br>數量 |
|---|---|---|
| 12 | W PA1371-0A | 2 |
| 13 | W XB323001 | 1 |
| 14 | W 3450356305 | 1 |
| 15 | W 3450356305 | 1 |
| 16 | W 3450356405 | 1 |
| 17 | W 3450353500 | 1 |
| 18 | W XB400051 | 1 |
| 19 | W ZSB1029 | 2 |
| 20 | W 3450352705 | 1 |
| 21 | W ZSB12008 | 1 |
| | | |

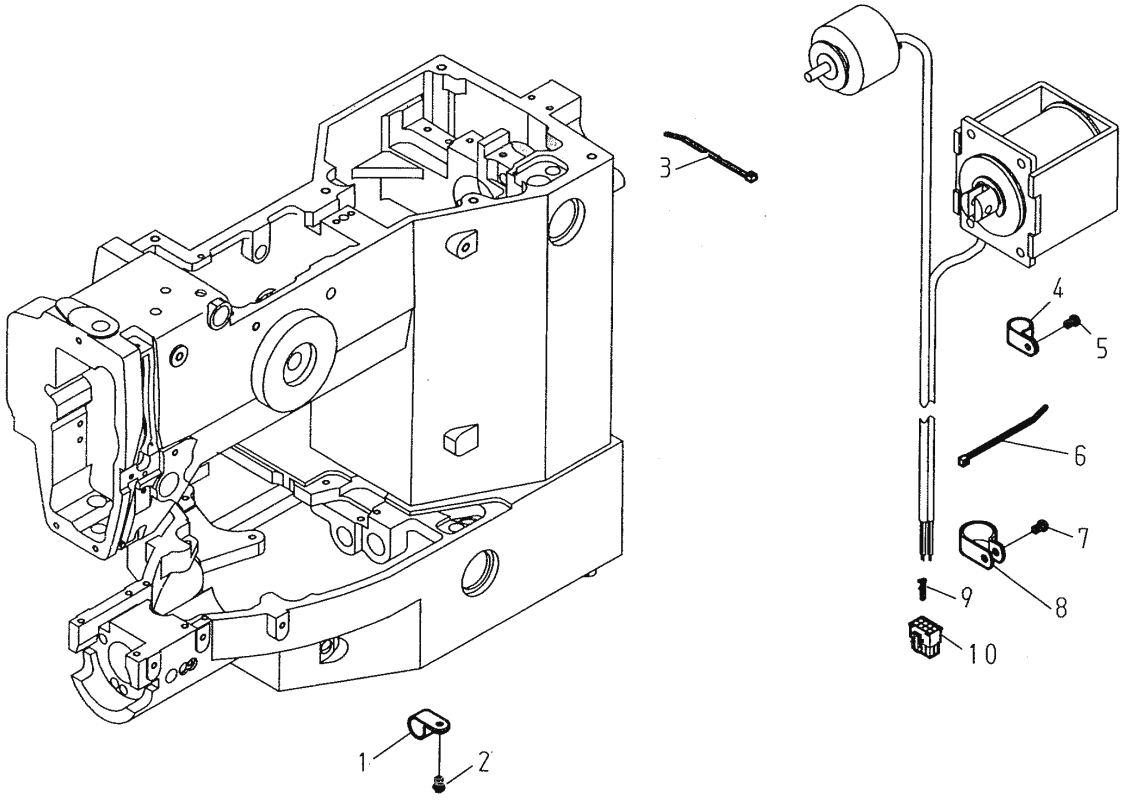


| Pos.-Nr.<br>Item No.<br>Nº de pos.<br>序号 | Teile-Nr.<br>Part No.<br>Nº de pieza<br>零件号 | Menge<br>Freq.<br>Cantida<br>数量 |
|---|---|---|
| 1 | W RU20UC-3 | 1 |
| 2 | W ZSB11029 | 1 |
| 3 | W RU010100 | 1 |
| 4 | W RU20UC-3 | 1 |
| 5 | W RU20UC-3 | 1 |

| Pos.-Nr.<br>Item No.<br>Nº de pos.<br>序号 | Teile-Nr.<br>Part No.<br>Nº de pieza<br>零件号 | Menge<br>Freq.<br>Cantida<br>数量 |
|---|---|---|
| 6 | W RU010100 | 1 |
| 7 | W ZSB11029 | 1 |
| 8 | W RU20UC-4 | 1 |
| 9 | W VJT6657-B1 | 4 |
| 10 | W VJT6657-08 | 1 |

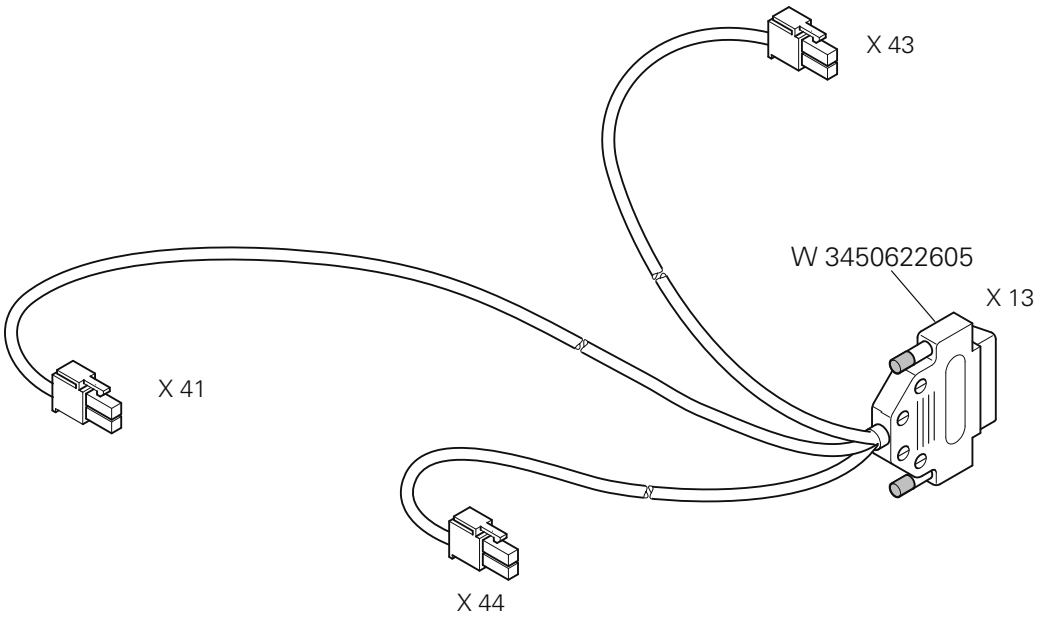
X 43
W 3450622605
X 13
X 41
X 44

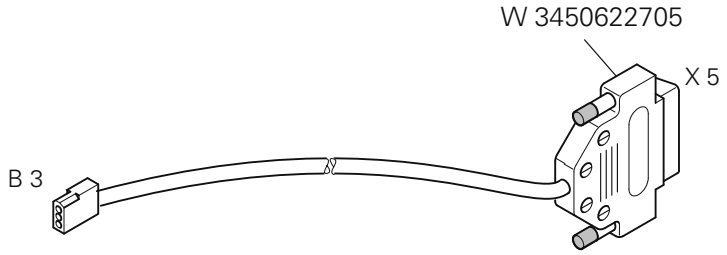
W 3450622705
X 5
B 3

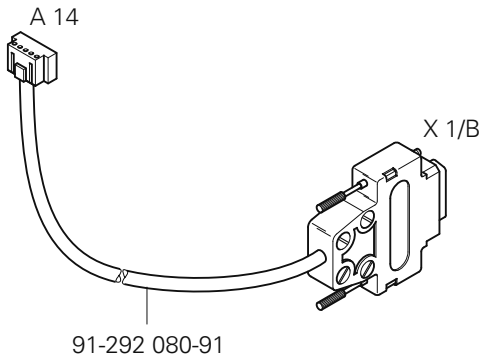
A 14
X 1/B
91-292 080-91

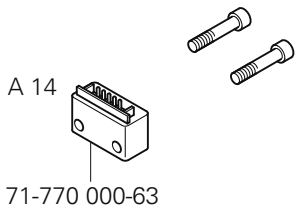
A 14
71-770 000-63



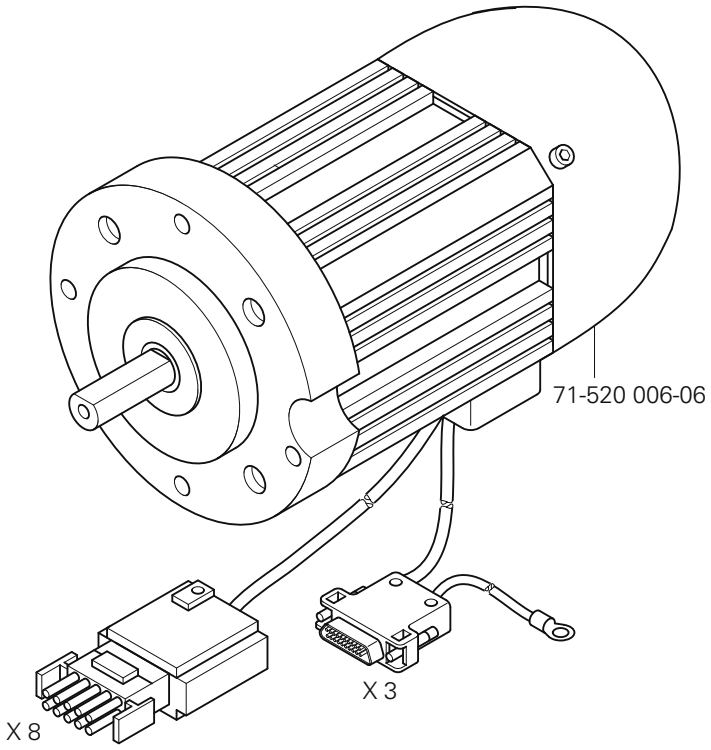
71-520 006-06
X 3
X 8

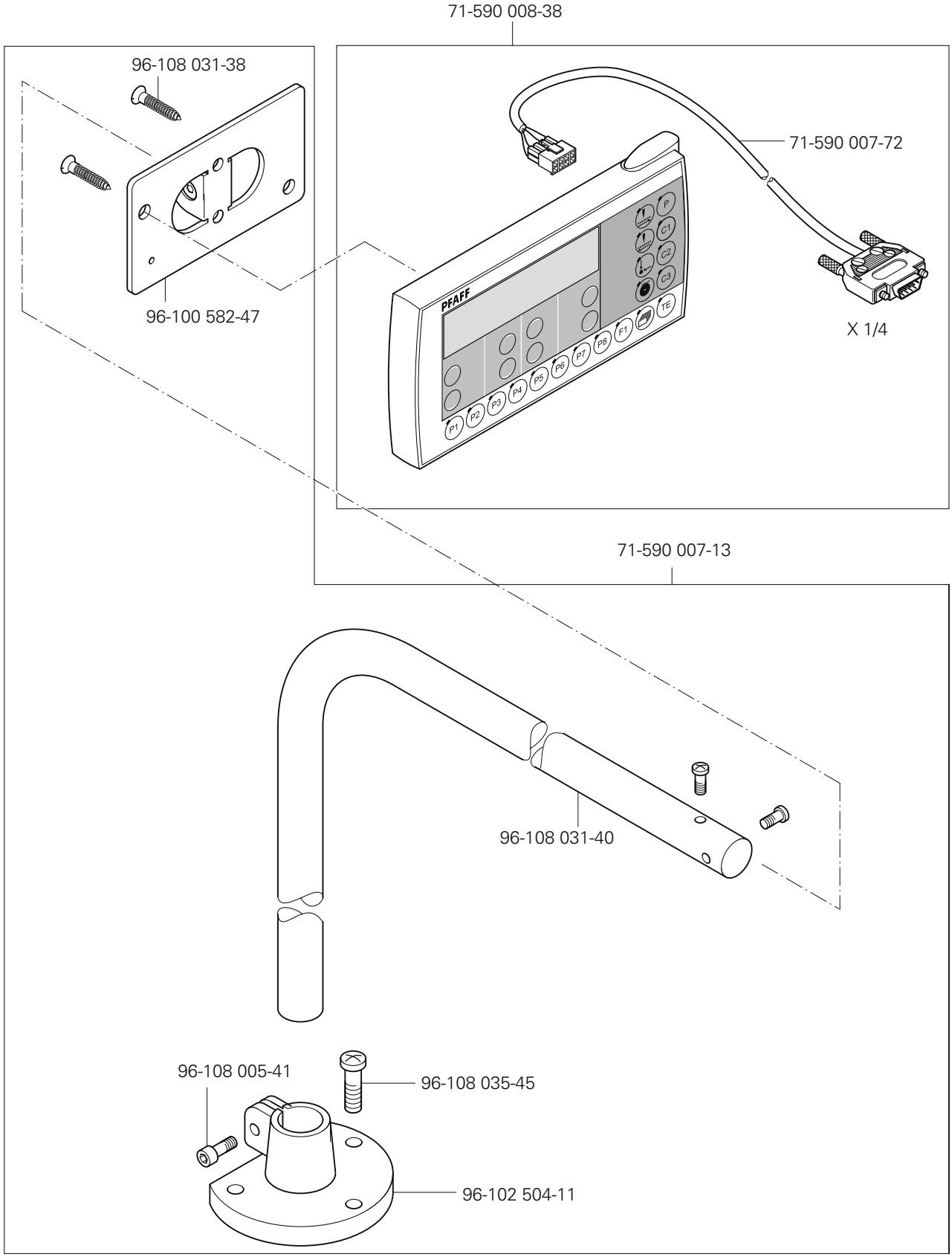
71-590 008-38
96-108 031-38
96-100 582-47
71-590 007-72
X 1/4
71-590 007-13
96-108 031-40
96-108 005-41
96-108 035-45
96-102 504-11

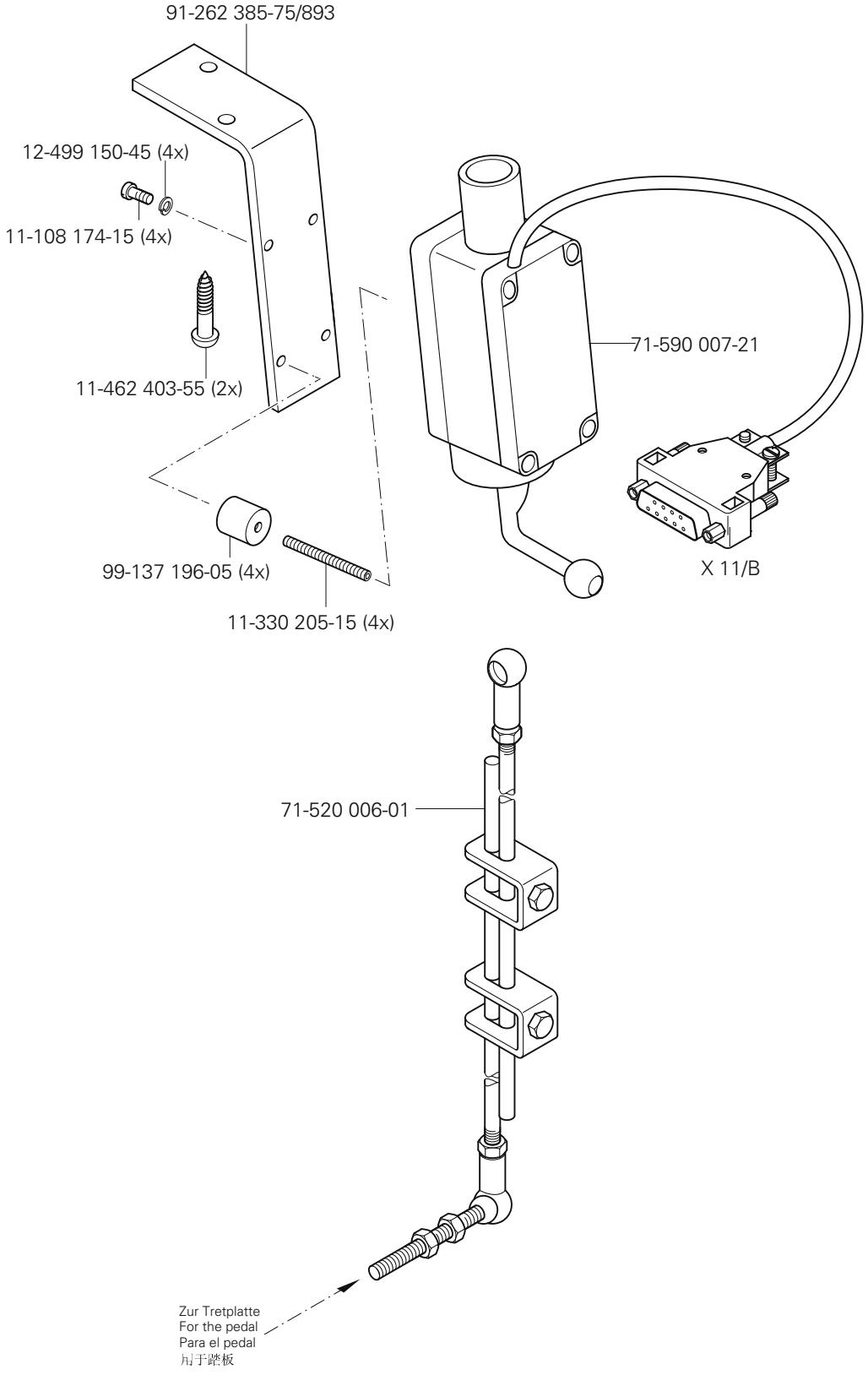
91-262 385-75/893
12-499 150-45 (4x)
11-108 174-15 (4x)
11-462 403-55 (2x)
99-137 196-05 (4x)
11-330 205-15 (4x)
71-590 007-21
X 11/B
71-520 006-01
Zur Tretplatte
For the pedal
Para el pedal
用于踏板

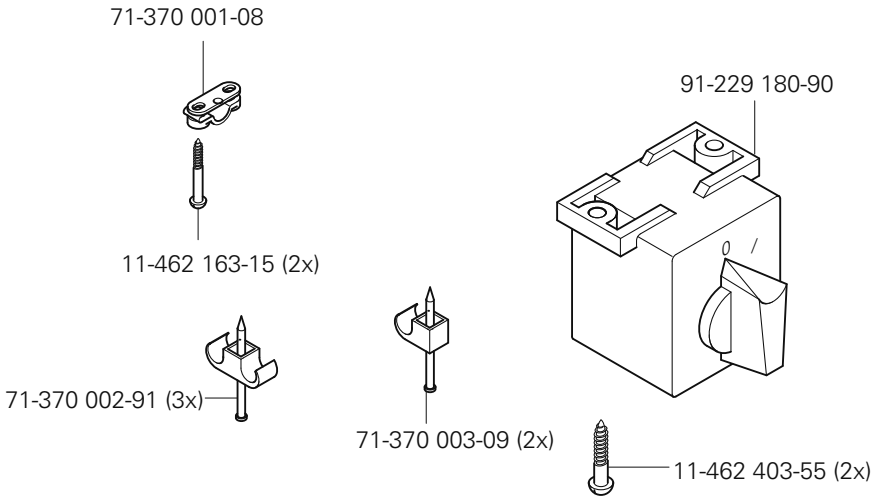
71-370 001-08
91-229 180-90
11-462 163-15 (2x)
0 /
71-370 002-91 (3x)
71-370 003-09 (2x)
11-462 403-55 (2x)

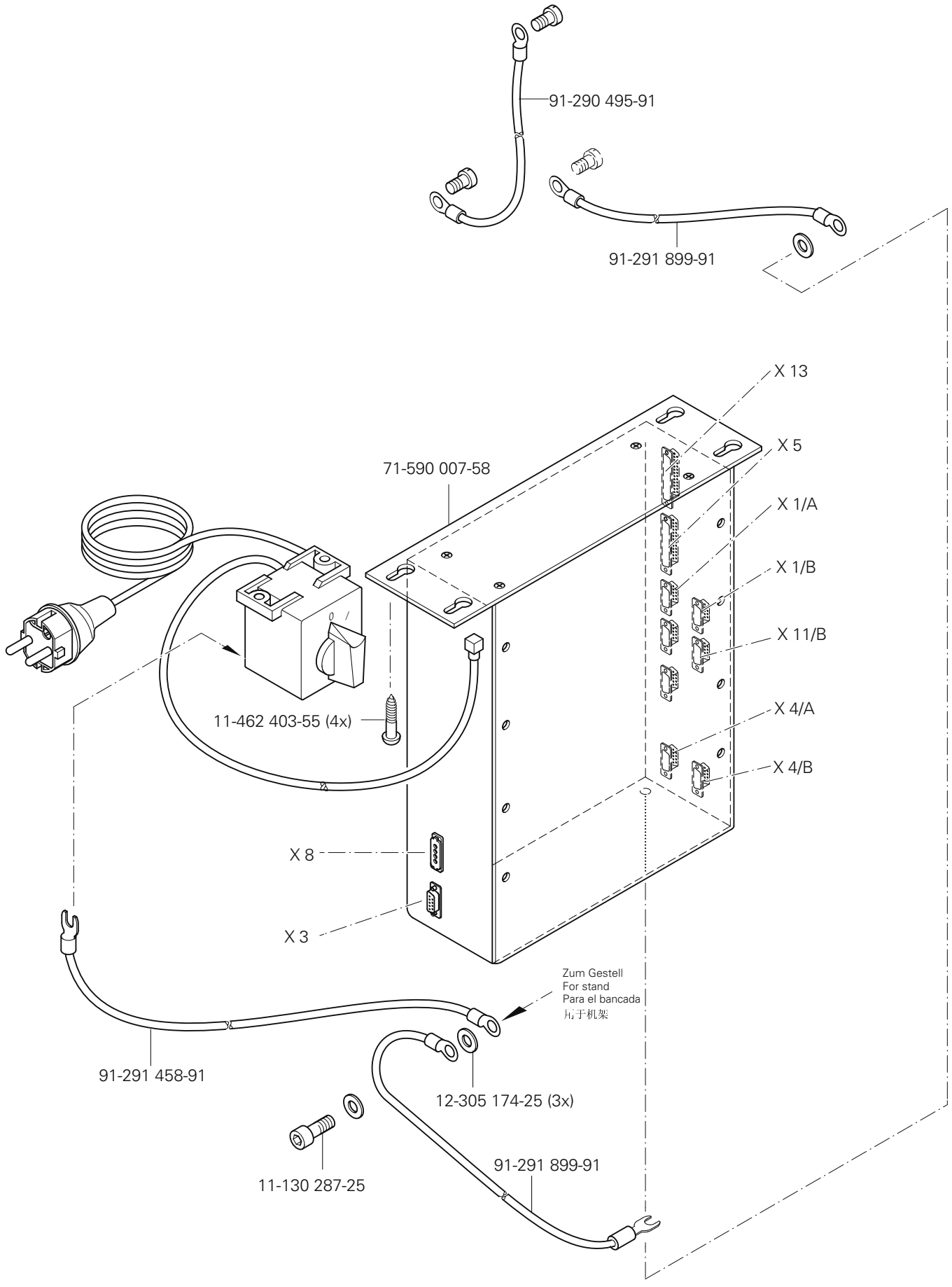
91-290 495-91
91-291 899-91
X 13
X 5
X 1/A
X 1/B
X 11/B
X 4/A
X 4/B
71-590 007-58
11-462 403-55 (4x)
X 8
X 3
Zum Gestell
For stand
Para el bancada
用于机架
91-291 458-91
12-305 174-25 (3x)
11-130 287-25
91-291 899-91

91-229 070-70/895

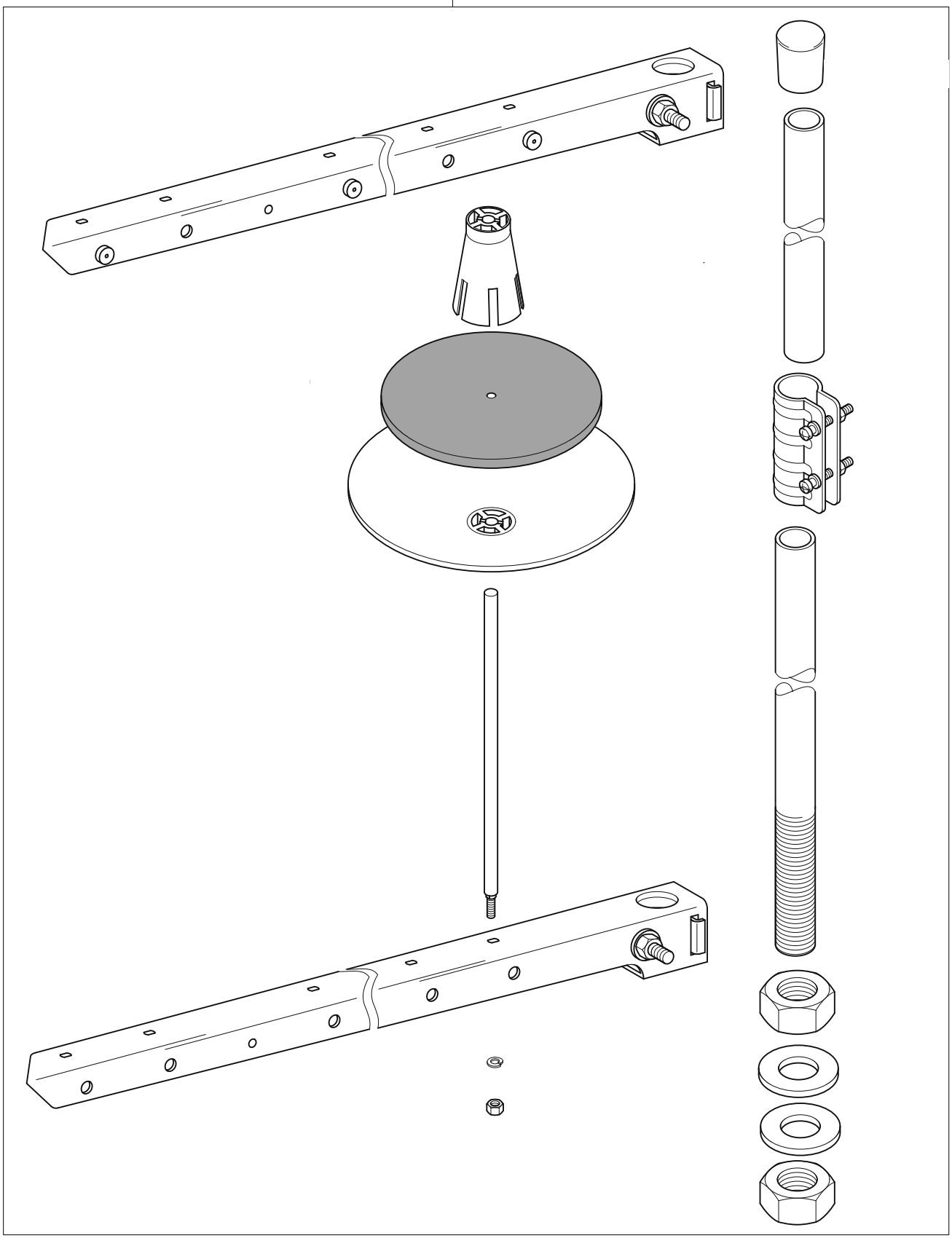

| Öl<br>Oil<br>Aceite<br>油 | Mittelpunkts-Viskosität bei:<br>Mean viscosity at:<br>Viscosidad media a:<br>中点粘度: | | Dichte bei:<br>Density of:<br>Densidad a:<br>密度，在： | | Bestellnummer für Behälter mit:<br>Part number for can with:<br>Número de pedido para recipientes con:<br>订货号用于油箱，带： | | |
|---|---|---|---|---|---|---|---|
| | °C | mm²/s | °C | g/cm³<br>(g/ml) | 1 Liter<br>1 Litre<br>1 Litro<br>1 升 | 5 Liter<br>5 Litre<br>5 Litros<br>5 升 | 10 Liter<br>10 Litre<br>10 Litros<br>10 升 |
| 28-011 201-05 | 40 | 10,0 | 15 | 0,847 | 91-027 975-91 | | |
| | | | | | | | |
| | | | | | | | |
| | | | | | | | |

| Fett<br>Grease<br>Grasa<br>脂 | Penetration<br>Penetration<br>Penetración<br>贯入度 | Tropfpunkt<br>Drip-point<br>Punto de goteo<br>滴点 | Bestellnummer für Behälter mit:<br>Part number for can with:<br>Número de pedido para recipientes con:<br>订货号用于油箱，带： | | |
|---|---|---|---|---|---|
| | mm/10 | °C | 0,25 kg | 0,5 kg | 1 kg |
| | | | | | |
| | | | | | |
| | | | | | |
| | | | | | |

| Reinigungsmittel<br>Cleansing agent<br>Limpiadores<br>清洁剂 | Bestellnummer für Behälter mit:<br>Part number for can with:<br>Número de pedido para recipientes con:<br>订货号用于油箱，带：<br>240 ml |
|---|---|
| | |

| No. 零件号 | Seite Page Página 页号 | No. 零件号 | Seite Page Página 页号 | No. 零件号 | Seite Page Página 页号 | No. 零件号 | Seite Page Página 页号 |
|---|---|---|---|---|---|---|---|
| 11-108 174-15 | 29 | 96-102 504-11 | 28 | W 3450140700 | 10 | W 3450158410 | 19 |
| 11-130 287-25 | 31 | 96-108 005-41 | 28 | W 3450141010 | 10, 21 | W 3450158420 | 19 |
| 11-330 205-15 | 29 | 96-108 031-38 | 28 | W 3450141020 | 10, 21 | W 3450158430 | 19 |
| 11-462 163-15 | 30 | 96-108 031-40 | 28 | W 3450141030 | 10, 21 | W 3450158440 | 19 |
| 11-462 403-55 | 29, 30, 31 | 96-108 035-45 | 28 | W 3450141200 | 19 | W 3450158450 | 19 |
| 12-305 174-25 | 31 | 99-137 196-05 | 29 | W 34501532A1 | 19 | W 3450180104 | 23 |
| 12-499 150-45 | 29 | W 3450110401 | 7 | W 34501532A2 | 19 | W 3450180300 | 23 |
| 28-011 201-05 | 33 | W 3450110500 | 9 | W 34501532A3 | 21 | W 3450181300 | 23 |
| 71-370 001-08 | 30 | W 3450110801 | 7 | W 3450155100 | 17 | W 3450181400 | 23 |
| 71-370 002-91 | 30 | W 3450111000 | 7 | W 3450155605 | 17 | W 3450181800 | 15 |
| 71-370 003-09 | 30 | W 3450111100 | 7 | W 3450155800 | 17 | W 3450182300 | 23 |
| 71-520 006-01 | 29 | W 3450112500 | 18 | W 3450156000 | 17 | W 3450182500 | 23 |
| 71-520 006-06 | 27 | W 3450114300 | 7 | W 3450156100 | 17 | W 3450183200 | 23 |
| 71-590 007-13 | 28 | W 3450114800 | 7 | W 3450156200 | 17 | W 3450184700 | 23 |
| 71-590 007-21 | 29 | W 3450119000 | 9 | W 3450156300 | 17 | W 3450185000 | 23 |
| 71-590 007-58 | 31 | W 3450120100 | 15 | W 3450156400 | 17 | W 3450185300 | 23 |
| 71-590 007-72 | 28 | W 3450120200 | 15 | W 3450156600 | 17 | W 3450185604 | 23 |
| 71-590 008-38 | 28 | W 3450120300 | 15 | W 3450156700 | 17 | W 3450185700 | 23 |
| 71-770 000-63 | 27 | W 3450121000 | 10 | W 3450156803 | 17 | W 3450185804 | 23 |
| 91-027 975-91 | 33 | W 3450121300 | 10 | W 3450156903 | 17 | W 3450189100 | 23 |
| 91-229070- 70/89532 | | W 3450122700 | 15 | W 3450157000 | 17 | W 3450190105 | 10 |
| 91-229 180-90 | 30 | W 3450123400 | 15 | W 3450157300 | 17 | W 3450190700 | 10 |
| 91-262385- 75/89329 | | W 3450123500 | 15 | W 3450157400 | 17 | W 3450215104 | 11 |
| 91-290 495-91 | 31 | W 3450123600 | 15 | W 3450157500 | 17 | W 3450215500 | 12 |
| 91-291 458-91 | 31 | W 3450123700 | 15 | W 3450157600 | 17 | W 3450215604 | 11 |
| 91-291 899-91 | 31 | W 3450123800 | 15 | W 3450157700 | 17 | W 3450216900 | 11 |
| 91-292 080-91 | 26 | W 3450140100 | 10 | W 3450157800 | 17 | W 3450240500 | 15 |
| 96-100 582-47 | 28 | W 3450140500 | 10 | W 3450158300 | 19 | W 3450240600 | 13 |

| No. 零件号 | Seite Page Página 页号 | No. 零件号 | Seite Page Página 页号 | No. 零件号 | Seite Page Página 页号 | No. 零件号 | Seite Page Página 页号 |
|---|---|---|---|---|---|---|---|
| W 3450240900 | 13 | W 3450257003 | 21 | W 3450322000 | 9 | W 3450730100-B | 21 |
| W 3450241000 | 13 | W 3450257103 | 21 | W 3450322100 | 9 | W 3450730200-B | 21 |
| W 3450241200 | 13 | W 3450257203 | 21 | W 3450322404 | 9 | W 3450740100 | 21 |
| W 3450241304 | 13 | W 3450257303 | 21 | W 3450322600 | 9 | W 3450740200 | 21 |
| W 3450241400 | 13 | W 3450257600 | 21 | W 3450322800 | 9 | W 3450740300 | 21 |
| W 3450241500 | 13 | W 3450257700 | 21 | W 3450322900 | 9 | W 3450740400 | 21 |
| W 3450241600 | 13 | W 3450257800 | 21 | W 3450335400 | 15 | W 3450911500 | 9 |
| W 3450241700 | 13 | W 3450257900 | 21 | W 3450336100 | 9 | W 3450911700 | 9 |
| W 3450241905 | 13 | W 3450310700 | 15 | W 3450339000 | 9 | W 3450913700 | 9 |
| W 3450242000 | 18 | W 3450310800 | 12 | W 3450350100 | 9 | W 4710320400 | 9 |
| W 3450242200 | 18 | W 3450312200 | 12 | W 3450352605 | 24 | W 5100122600 | 15 |
| W 3450243005 | 18 | W 3450312300 | 12 | W 3450352705 | 24 | W 5100140900 | 10 |
| W 3450243210 | 18 | W 3450312700 | 12 | W 3450352800 | 23 | W 5100184900 | 17 |
| W 3450243220 | 18 | W 3450313300 | 7 | W 3450352905 | 24 | W 51002408TO | 13 |
| W 3450243230 | 18 | W 3450313400 | 7 | W 3450353500 | 24 | W 51002448TO | 13 |
| W 3450243240 | 18 | W 3450313700 | 12 | W 3450356305 | 24 | W 5100311600 | 7 |
| W 3450243250 | 18 | W 3450317100 | 13 | W 3450356405 | 24 | W 5100315300 | 9 |
| W 3450243300 | 18 | W 3450317200 | 13 | W 3450357505 | 24 | W 51003155TO | 9 |
| W 3450243405 | 18 | W 3450318100 | 12 | W 3450357605 | 24 | W 5100351700 | 17 |
| W 3450243700 | 18 | W 3450320104 | 9 | W 3450602405 | 15 | W A1022-0A | 12 |
| W 3450243900 | 13 | W 3450320105 | 9 | W 3450602406 | 15 | W BB6302ZZNR | 15 |
| W 3450245005 | 18 | W 3450320500 | 15 | W 3450603700 | 15 | W BN081110 | 10, 23 |
| W 3450245600 | 13, 23 | W 3450320904 | 9 | W 3450606500 | 20 | W BNKT8128 | 10 |
| W 3450255300 | 21 | W 3450321100 | 9 | W 3450606600 | 16, 20 | W EJ1021-0A | 12 |
| W 3450255700 | 21 | W 3450321200 | 9 | W 3450622605 | 26 | W H1042-0A | 12 |
| W 3450256000 | 21 | W 3450321500 | 9 | W 3450622705 | 26 | W H7151-0A | 7 |
| W 3450256200 | 21 | W 3450321700 | 9 | W 3450710100 | 15 | W HB1022-0A | 12 |
| W 3450256500 | 21 | W 3450321800 | 9 | W 3450720203 | 27 | W HB1025-0A | 7, 12 |

| No. 零件号 | Seite Page Página 页号 | No. 零件号 | Seite Page Página 页号 | No. 零件号 | Seite Page Página 页号 | No. 零件号 | Seite Page Página 页号 |
|---|---|---|---|---|---|---|---|
| W HB1028-0A | 12 | W PC1332-0A | 12 | W PC6111-0A | 18 | W WA060017 | 7 |
| W HB1054-0A | 7 | W PC1751-0A | 17 | W PC6118-0A | 18 | W WA069001 | 19, 21 |
| W HB1086-0A | 7 | W PC1753-0A | 11 | W PC7150-0A | 7 | W WA069002 | 12 |
| W HB1088-0A | 7 | W PC1755-0A | 11 | W PC7152-0A | 7 | W WA069005 | 9 |
| W INDPx17-19 | 10 | W PC1756-0A | 11 | W RB200050 | 11 | W WA080015 | 23 |
| W OBS00080 | 19 | W PC1758-0A | 11 | W RB200060 | 9 | W WA090007 | 23 |
| W OP001600 | 15 | W PC4013-0A | 23 | W RE000030 | 23 | W WARN000500 | 7 |
| W OPP0040100 | 9 | W PC4181-0A | 19 | W RE000050 | 9 | W WH208002 | 10, 13 |
| W OPP00500 | 17 | W PC4182-0A | 19 | W RE000050 | 13 | W WH210012 | 23 |
| W OPP00680 | 21 | W PC4183-0A | 19 | W RE000070 | 19 | W XA301000 | 9 |
| W OPP0092270 | 9 | W PC4184-0A | 19 | W RE000090 | 23 | W XB103002 | 23 |
| W PA1371-0A | 24 | W PC4185-0A | 17 | W RU010100 | 24, 25 | W XB104001 | 23 |
| W PC1013-0A | 7 | W PC4185-1A | 17 | W RU20UC-3 | 25 | W XB323001 | 24 |
| W PC1021-1A | 7 | W PC4186-0A | 19 | W RU20UC-4 | 25 | W XB400012 | 24 |
| W PC1026-0A | 12 | W PC4188-0A | 19 | W SEN0700700 | 7 | W XB400051 | 24 |
| W PC1026-1A | 7 | W PC4190-0A | 19 | W SEN1000500 | 7, 9 | W XB400053 | 23 |
| W PC1029-0A | 12 | W PC4192-0A | 19 | W SEN1205400 | 7 | W YA020100 | 23 |
| W PC1053-0A | 7 | W PC4271-0A | 21 | W SEN1250400 | 7 | W YA079310 | 9 |
| W PC1055-0A | 7 | W PC4272-0A | 21 | W SEN1407000 | 7 | W YD020006 | 7 |
| W PC1064-0A | 10 | W PC6030-0A | 23 | W VJT6657-08 | 25 | W YD040014A | 15 |
| W PC1071-0A | 10 | W PC6031-0A | 23 | W VJT6657-B1 | 25 | W YR000060 | 17 |
| W PC1083-0A | 7 | W PC6032-0A | 23 | W WA040008 | 12 | W ZMB03011 | 17, 21 |
| W PC1085-0A | 10 | W PC6050-0A | 18 | W WA040010 | 18 | W ZMB06018 | 15 |
| W PC1106-0A | 15 | W PC6051-0A | 21 | W WA0449003 | 13 | W ZMB06019 | 15 |
| W PC1144-0A | 24 | W PC6062-0A | 21 | W WA049006 | 7 | W ZMD04010 | 17 |
| W PC1145-0A | 24 | W PC6101-0A | 23 | W WA050015 | 17 | W ZME04003 | 15 |
| W PC1206-0A | 19 | W PC6106-0A | 23 | W WA050016 | 13 | W ZMH05011 | 18 |
| W PC1330-0A | 12 | W PC6107-0A | 23 | W WA059005 | 13 | W ZMH06005 | 15 |

| No. 零件号 | Seite Page Página 页号 | No. 零件号 | Seite Page Página 页号 | No. 零件号 | Seite Page Página 页号 | No. 零件号 | Seite Page Página 页号 |
|---|---|---|---|---|---|---|---|
| W ZMH06008 | 15, 21 | W ZSB1029 | 24 | W ZSG11025 | 11, 12 | W ZSK12028 | 7 |
| W ZMJ04008 | 15 | W ZSB11008 | 17, 24 | W ZSG11062 | 7 | W ZSK16036 | 18 |
| W ZMJ06002 | 17, 19 | W ZSB11009 | 13 | W ZSG11095 | 13 | W ZSL09001 | 7 |
| W ZMJ06018 | 9 | W ZSB11010 | 15 | W ZSG11096 | 12 | W ZSL11002 | 13, 18 |
| W ZML04002 | 13 | W ZSB11012 | 13 | W ZSG11097 | 13 | W ZSL11007 | 7, 9 |
| W ZML05001 | 18 | W ZSB11022 | 19 | W ZSG11098 | 13 | W ZSL12004 | 7, 12, 18 |
| W ZML06001 | 9 | W ZSB11028 | 7, 15 | W ZSG12010 | 11 | W ZSL15002 | 13, 17 |
| W ZMQ06003 | 21 | W ZSB11029 | 7, 9, 18, 21, 24 | W ZSG12013 | 12, 17 | W ZSL16005 | 13, 23 |
| W ZMT03008 | 9 | W ZSB11032 | 7, 11, 13, 17, 23 | W ZSG12066 | 18 | W ZSL16015 | 13 |
| W ZSA08003 | 19 | W ZSB11043 | 18 | W ZSG12071 | 12 | W ZSN16004 | 7 |
| W ZSA11004 | 21 | W ZSB11066 | 21 | W ZSG15027 | 17 | W ZSR16009 | 12 |
| W ZSA11005 | 23 | W ZSB11082 | 7, 17, 21 | W ZSG15068 | 18 | | |
| W ZSA11009 | 15 | W ZSB11093 | 23 | W ZSG15069 | 17 | | |
| W ZSA11011 | 23 | W ZSB11109 | 12 | W ZSG16025 | 17 | | |
| W ZSA11012 | 23 | W ZSB11114 | 9, 21 | W ZSG16041 | 11 | | |
| W ZSA11016 | 15 | W ZSB12006 | 13 | W ZSG16042 | 15 | | |
| W ZSA15021 | 19 | W ZSB15005 | 9 | W ZSH11004 | 9 | | |
| W ZSA16008 | 15 | W ZSB15007 | 10 | W ZSH15002 | 13, 17, 23 | | |
| W ZSA16025 | 15 | W ZSB15014 | 17 | W ZSH16001 | 21 | | |
| W ZSB06019 | 23 | W ZSB15027 | 7 | W ZSH16004 | 15 | | |
| W ZSB08010 | 10 | W ZSB15046 | 21, 23 | W ZSJ12006 | 23 | | |
| W ZSB09014 | 10 | W ZSC06011 | 18 | W ZSJ15001 | 21 | | |
| W ZSB09020 | 7,9 | W ZSC11001 | 19 | W ZSJ15002 | 15 | | |
| W ZSB09024 | 23 | W ZSC11017 | 19 | W ZSJ15007 | 12 | | |
| W ZSB09025 | 12 | W ZSC11019 | 18, 21 | W ZSJ18001 | 15 | | |
| W ZSB09040 | 18 | W ZSD11001 | 12 | W ZSK09005 | 10 | | |
| W ZSB09048 | 24 | W ZSE11002 | 7 | W ZSK11021 | 18 | | |
| W ZSB10029 | 25 | W ZSG09037 | 18 | W ZSK11042 | 12 | | |

PFAFF® Industrial

# 3371-1/..

## Unterklassen-Ausstattung
Subclass parts
Composición de las subclases
子机型–设备

| Unterklasse<br>Subclasse<br>Subclase<br>子机型 | Verwendungszweck<br>Applications<br>Fin de empleo<br>使用目的 | Klammerfuß<br>Work clamp foot<br>Pinza-prensatelas<br>夹脚 | Auflageplatte<br>Feed plate<br>Placa de apoyo<br>垫板 | Stichplatteneinsatz<br>Needle plate insert<br>Suplemento de la placa de aguja<br>针板部件 | Fingerschutz<br>Finger guard<br>Protector de dedos<br>护指器 | Teilesatz komplett<br>Complete parts set<br>Juego de organos de costura<br>成套组件 |
|---|---|---|---|---|---|---|
| -1 /01 | Standard Material<br>Standard material<br>Material estandard<br>标准缝料 | 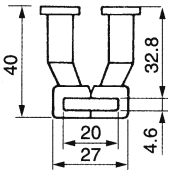 | 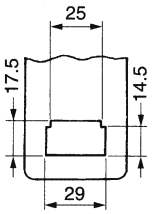 |  | 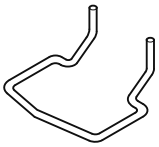 | |
| Teile-Nr.<br>Part No.<br>Nº de pieza<br>零件号 | | W PC4185-0A ❶<br>W PC4185-1A ❷ | W PC6051-0A | W 3450112500 | W 3450141200 | |

| Unterklasse<br>Subclasse<br>Subclase<br>子机型 | Verwendungszweck<br>Applications<br>Fin de empleo<br>使用目的 | Klammerfuß<br>Work clamp foot<br>Pinza-prensatelas<br>夹脚 | Auflageplatte<br>Feed plate<br>Placa de apoyo<br>垫板 | Stichplatteneinsatz<br>Needle plate insert<br>Suplemento de la placa de aguja<br>针板部件 | Fingerschutz<br>Finger guard<br>Protector de dedos<br>护指器 | Teilesatz komplett<br>Complete parts set<br>Juego de organos de costura<br>成套组件 |
|---|---|---|---|---|---|---|
| -1 /11 | Schweres Material<br>Heavy material<br>Material pesado<br>厚缝料 | 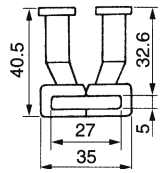 | 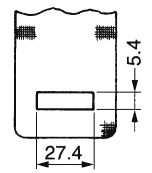 |  | 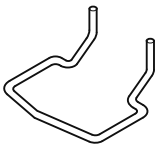 | |
| Teile-Nr.<br>Part No.<br>Nº de pieza<br>零件号 | | W 34501532A1 ❶<br>W 34501532A2 ❷ | W 34501532A3 | W PC6049-OH | W 3450141200 | |



❶ Links
Left
Izquierda
左

❷ Rechts
Right
Derecha
右

PFAFF® Industrial



Europäische Union
Wachstum durch Innovation – EFRE




PFAFF Industriesysteme
und Maschinen AG

Hans-Geiger-Str. 12 - IG Nord
D-67661 Kaiserslautern

Telefon: +49 - 6301 3205 - 0
Telefax: +49 - 6301 3205 - 1386
E-mail: info@pfaff-industrial.com

## Hotlines:

Technischer Service / Technical service:
Service technique / Servicio técnico: +49 - 175 2243-101

Nähtechnik-Fachberatung / Application consultance:
Conseiller de couture et technique / Asesor técnico: +49 - 175 2243-102

Ersatzteile-Hotline / Spare-parts hotline:
Hotline - Pièces détachées / Hotline Repuestos: +49 - 175 2243-103

Gedruckt in der BRD / Printed in Germany / Imprimé en la R.F.A. / Impreso en la R.F.A

© PFAFF Industriesysteme und Maschinen AG 2009, PFAFF is the exclusive trademark of VSM Group AB.PFAFF Industriesysteme und Maschinen AG is an authorized licensee of the PFAFF trademark.