PFAFF® Industrial

3519-4/01

INSTRUCTION MANUAL

This instruction manual applies to machines from serial number **2 763 205** and software version **0361/013** onwards.

296-12-18 635/002
Betriebsanleitung engl. 02.12

The reprinting, copying or translation of PFAFF Instruction Manuals, whether in whole or in part, is only permitted with our previous authorization and with written reference to the source.

PFAFF Industriesysteme
und Maschinen AG

Hans-Geiger-Str. 12 - IG Nord
D-67661 Kaiserslautern

Contents ..... Chapter - Page

1 Safety 7
1.01 Directives 7
1.02 General notes on safety 7
1.03 Safety symbols 8
1.04 Important points for the user 8
1.05 Operating and specialist personnel 9
1.05.01 Operating personnel 9
1.05.02 Specialist personnel 9
1.06 Danger 10

2 Proper use 11

3 Specifications 12

4 Disposal of Machine 13

5 Transportation, packing and storage 14
5.01 Transportation to customer's premises 14
5.02 Transportation inside the customer's premises 14
5.03 Disposal of packing materials 14
5.04 Storage 14

6 Explanation of symbols 15

7 Controls 16
7.01 On/off switch 16
7.02 Machine control unit button 16
7.03 Switch for the extractor fan (optional) 17
7.04 Emergency-off button 17
7.05 Control panel 18
7.06 Pedal 18
7.07 Start keys 19

8 Installation and commissioning 20
8.01 Installation 20
8.01.01 Aligning the machine 20
8.01.02 Detaching the transit lock on the loading table 21
8.01.03 Detaching the transit lock on the sewing head 21
8.01.04 Detaching the transit lock on the loading clamp 22
8.01.04 Fitting the reel stand 23
8.01.05 Connecting the pedal 23
8.02 Commissioning 24
8.03 Switching the machine on / off 25
8.04 Adjusting the control panel 26

Contents ..... Chapter - Page

9	Preparation	27
9.01	Inserting the needle	27
9.02	Threading the needle thread / Adjusting the needle thread tension	28
9.03	Winding the bobbin thread / regulating the bobbin winder tension	29
9.04	Changing the bobbin / adjusting the bobbin thread tension	30
9.05	Changing the dart insert	31
9.06	Adjusting the loading unit for ironing compensation strips	32
9.07	Selecting a program number	33
9.08	Selecting / configuring program groups	34
9.08.01	Selecting a program group	34
9.08.02	Configuring a program group	35
10	Sewing	36
10.01	Inserting the workpiece	37
10.01.01	Inserting the workpiece with the positioning tube	37
10.01.02	Insert the workpiece using the loading table	39
10.02	Sewing in automatic operation	40
10.03	Manual sewing mode	41
10.04	Error messages	43
11	Input	44
11.01	Overview of the functions in the input mode	44
11.02	Creating / altering seam programs	46
11.02.01	Creating / altering single-pointed darts	48
11.02.02	Creating / altering double-pointed darts	49
11.02.03	Creating / altering tapered darts	50
11.02.04	Entering a comment	51
11.02.05	Entering correction values	52
11.02.06	Concluding seam programming	53
11.03	Program management	54
11.04	Rights of access	56
12	Care and maintenance	59
12.01	Maintenance intervals	59
12.02	Cleaning the entire machine	59
12.03	Cleaning the needle area and hook compartment	60
12.04	Cleaning the fan air filter	61
12.05	Cleaning the air filter of the air-filter/lubricator	61
12.06	Checking/adjusting the air pressure	62
12.07	Checking the oil level	63
12.08	Lubricating the cutting device	64
12.09	Lubricating the stacker drive	65
13	Adjustment	66
13.01	Notes on adjustment	66

Contents ..... Chapter - Page

13.02	Tools, gauges and other accessories	66
13.03	Abbreviations	66
13.04	Servicing position of the sewing head	67
13.05	Adjusting the sewing head	69
13.05.01	Adjustment aids	69
13.05.02	Basic position of the machine drive	70
13.05.03	Needle in needle hole centre	71
13.05.04	Hook shaft bearing and toothed belt tension	72
13.05.05	Hook lubrication	73
13.05.06	Needle rise, hook-to-needle clearance, needle height and bobbin case position finger	74
13.05.07	Thread check spring and slack thread regulator	75
13.05.08	Bobbin winder	76
13.06	Adjusting the thread trimming device	77
13.06.01	Preliminary adjustment of the control cam	77
13.06.02	Adjusting the roller lever	78
13.06.03	Lateral adjustment of the thread catcher	79
13.06.04	Knife position	80
13.06.05	Front point of reversal of the thread catcher	81
13.06.06	Manual trimming check	82
13.06.07	Readjusting the control cam	83
13.07	Adjusting the loading table	84
13.07.01	Basic setting of the loading table height	84
13.07.02	Positioning the loading table	85
13.07.03	Retraction depth of the loading table	86
13.08	Adjusting the sewing head	87
13.08.01	Height of the sewing head	87
13.08.02	Side adjustment of the machine head	88
13.09	Adjusting the cloth plate	89
13.10	Adjusting the positioning tube	90
13.10.01	Pre-setting the positioning tube	90
13.10.02	Front end position of the positioning tube	91
13.10.03	Height and location of the positioning tube	92
13.11	Height of the needles	93
13.12	Adjusting the spreader	94
13.13	Adjusting the table extension	95
13.14	Adjusting the loading clamp	96
13.14.01	Height of the loading clamp	96
13.14.02	Position of the loading clamp	97
13.15	Adjusting the brushes	98
13.15.01	Adjusting the long brushes	98
13.15.02	Adjusting the short brushes	99
13.16	Adjusting the knife unit	100
13.16.01	Pre-setting the knife unit	100
13.16.02	Height of the knife unit	101
13.16.03	Knife change	102

Contents ..... Chapter - Page

13.17 Adjusting the workholder bar 103
13.17.01 Zero point of the workholder bar 103
13.17.02 Workholder bar stop 104
13.18 Adjusting the pneumatic table pressure 105
13.19 Adjusting the pressure control device 106
13.20 Adjusting the stacker 107
13.21 Adjusting the sensor on the stacker clamp 108
13.22 Boot key 110
13.23 Service menu 111
13.23.01 Cold start 113
13.23.02 Machine configuration 114
13.23.03 Loading / updating the operating program 115
13.24 Sewing motormenu 116
13.25 Parameter settings 117
13.25.01 Selecting and altering parameters. 117
13.25.02 Parameter list 118

14 Control unit 120
14.01 Basic setting / Diagnosis / Pin assignment 120
14.01.01 Power unit A30 120
14.01.02 Basic control unit A20 122
14.01.03 Sewing drive A22 124
14.01.04 Stepping motor drive 125
14.01.05 CAN node A10, A11, A12 126
14.02 Description of the error messages 128
14.02.01 General errors 128
14.02.02 CAN-Error 130
14.02.03 Stitch generation error 130
14.02.04 Sewing motor error 131
14.02.05 Errors – Stepping motor drive 132
14.03 List of outputs and inputs 133
14.03.01 CAN-Nodes 1 133
14.03.02 CAN-Nodes 2 134
14.03.03 CAN-Nodes 3 135
14.03.04 Special outputs 136

15 Pneumatic system circuit diagram 137

16 Circuit diagrams 144

1 Safety

1.01 Directives

The machine has been constructed in accordance with the requirements listed in the EC Declaration of Conformity and the Declaration of Incorporation.
In addition to this Instruction Manual, also observe all generally accepted, statutory and other regulations and legal requirements and all valid environmental protection regulations! The regionally valid regulations of the social insurance society for occupational accidents or other supervisory organizations are to be strictly adhered to!

1.02 General notes on safety

- This machine may only be operated by adequately trained operators and only after having completely read and understood the Instruction Manual!
- All Notes on Safety and Instruction Manuals of the motor manufacturer are to be read before operating the machine!
- The danger and safety instructions on the machine itself are to be followed!
- This machine may only be used for the purpose for which it is intended and may not be operated without its safety devices. All safety regulations relevant to its operation are to be adhered to.
- When exchanging sewing tools (e.g. needle, roller presser, needle plate and bobbin), when threading the machine, when leaving the machine unattended and during maintenance work, the machine is to be separated from the power supply by switching off the On/Off switch or by removing the plug from the mains!
- Everyday maintenance work is only to be carried out by appropriately trained personnel!
- Repairs and special maintenance work may only be carried out by qualified service staff or appropriately trained personnel!
- Work on electrical equipment may only be carried out by appropriately trained personnel!
- Work is not permitted on parts and equipment which are connected to the power supply! The only exceptions to this rule are found in the regulations EN 50110.
- Modifications and alterations to the machine may only be carried out under observance of all the relevant safety regulations!
- Only spare parts which have been approved by us are to be used for repairs! We expressly point out that any replacement parts or accessories which are not supplied by us have not been tested and approved by us. The installation and/or use of any such products can lead to negative changes in the structural characteristics of the machine. We are not liable for any damage which may be caused by non-original parts.

1.03 Safety symbols



Danger!
Points to be observed..



Danger of injury for operating and specialist personnel!



Danger: Laser beam!



Caution

Do not operate without finger guard and safety devices.

Before threading, changing bobbin and needle, cleaning etc. **switch off main switch.**



Only one person allowed in working area!

During operation only one person is allowed to be in the working area of the machine!



Do not lean on table!

The mechanical feed system can be damaged by leaning on the loading table.

1.04 Important points for the user

- This Instruction Manual is an integral part of the machine and must be available to the operating personnel at all times.
- The Instruction Manual must be read before operating the machine for the first time.
- The operating and specialist personnel is to be instructed as to the safety equipment of the machine and regarding safe work methods.
- It is the duty of the user to only operate the machine in perfect running order.
- It is the obligation of the user to ensure that none of the safety mechanisms are removed or deactivated.
- It is the obligation of the user to ensure that only authorized persons operate and work on the machine.

Further information can be obtained from your PFAFF agent.

1.05 Operating and specialist personnel

1.05.01 Operating personnel

Operating personnel are persons responsible for the equipping, operating and cleaning of the machine as well as for taking care of problems arising in the sewing area.

The operating personnel is required to observe the following points and must:

- always observe the Notes on Safety in the Instruction Manual!
- never use any working methods which could adversely affect the safety of the machine!
- not wear loose-fitting clothing or jewelery such as chains or rings!
- also ensure that only authorized persons have access to the potentially dangerous area around the machine!
- always immediately report to the person responsible any changes in the machine which may limit its safety!

1.05.02 Specialist personnel

Specialist personnel are persons with a specialist education in the fields of electrics, electronics and mechanics. They are responsible for the lubrication, maintenance, repair and adjustment of the machine.

The specialist personnel is obliged to observe the following points and must:

- always observe the Notes on Safety in the Instruction Manual!
- switch off the On/Off switch before carrying out adjustments or repairs, and ensure that it cannot be switched on again unintentionally!
- wait until the luminous diode on the control box is no longer blinking or on before beginning adjustment or repair work.
- never work on parts which are still connected to the power supply! Exceptions are explained in the regulations EN 50110.
- replace the protective coverings and close the electrical control box afer all repairs or maintenance work!

1.06 Danger

A working area of **1** meter is to be kept free both in front of and behind the machine while it is in operation so that it is always easily accessible.

During sewing do not place hands in the working area of the machine!
Danger of injury from the sewing head needles and loading equipment!

Never leave objects on the table while adjusting the machine settings!
Objects can become trapped or be slung away! Danger of injury!

Do not look into laser beam either with or without optical equipment!
Danger of injury to the retina from the directed light!

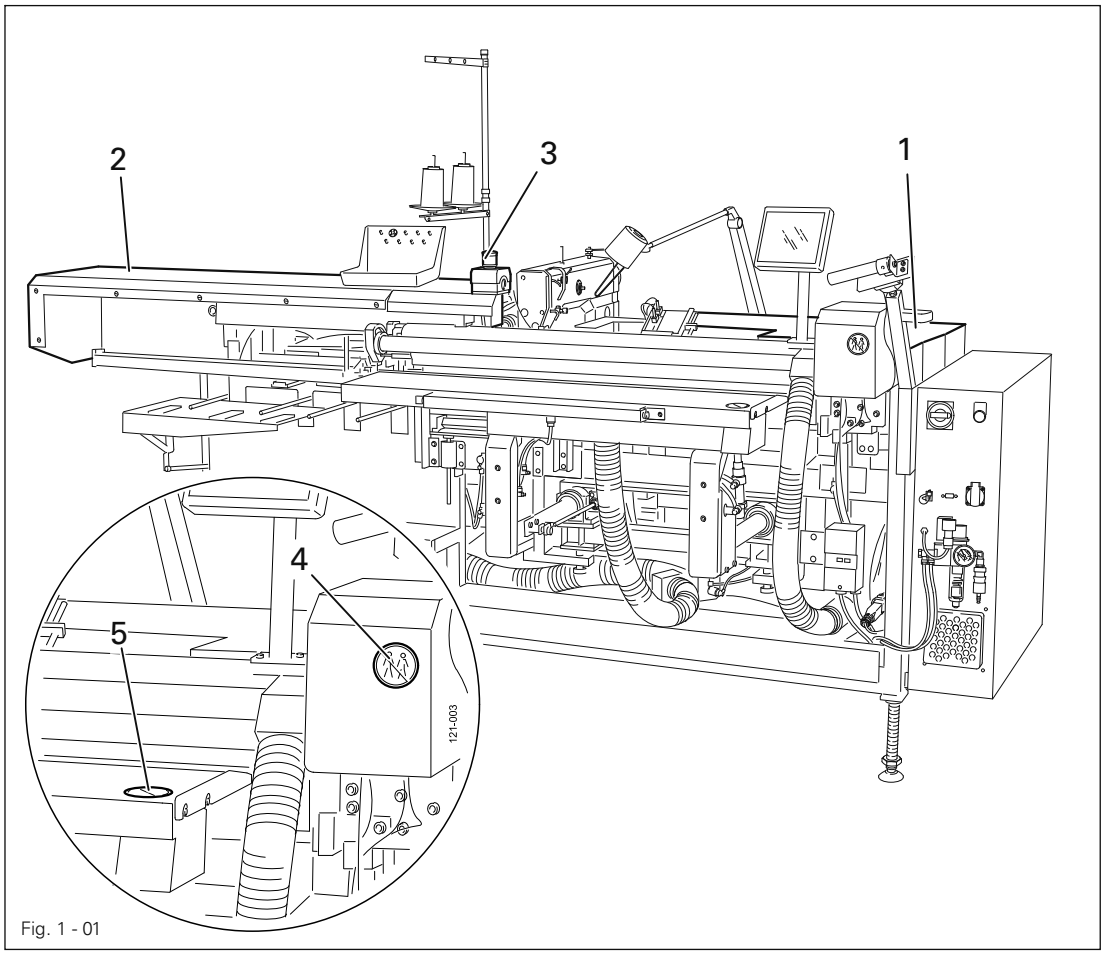

Fig. 1 - 01

Only operate the machine with covers **1** and **2** closed!
Danger of injury from moving machine parts!

The emergency-off button **3** is used to stop the machine immediately in case of emergencies.

2 Proper use

The **PFAFF 3519-4/01** is an automatic sewing unit for sewing single- or double-pointed jacket breast darts.



Any and all uses of this machine which have not been approved of by the manufacturer are considered to be inappropriate! The manufacturer cannot be held liable for any damage caused by the inappropriate use of the machine! The appropriate use of the machine includes the observance of all operational, adjustment, maintenance and repair measures required by the manufacturer!

3 Specifications▲

Stitch type: .....301 (lockstitch)
Needle system: 134
Needle size in 1/100 mm: ..... 80 - 100

Stitch length: .....0,5 - 3,0 mm
Max. sewing speed: .....4300 spm
Stitch length start tacks: .....Standard stitch length or half standard stitch length
Number of stitches for start tacks: ..... 1 – 9
Stitch length start/end condensed stitches: .....1 – 3 mm
Number of stitches start/end condensed stitches: ..... 1 – 9

Sewing area size
Dart depth: .....5 - 12 mm
Dart length: .....80 - 395 mm

Max. material thickness for sewing: .....4 mm

Machine dimensions:
Length: .....approx. 2.800 mm
Width: .....1.200 - 1.800 mm
Height: ..... approx. 1400 mm

Weight: .....approx. 695 kg

Electrical data
Power supply:: ..... 230 V ± 10 %, 50/60 Hz
Max. output: .....3 kVA
Fuse protection: .....1 x 16 A, inert
Leakage current ..... ≤ 5 mA◆
Working air pressure: .....6 bar
Air consumption: .....ca. 25 l/work cycle

Ambient temperature
85% rel. humidity (condensation not permitted): ..... 5 – 40° C

Noise data:
Noise emission level at workplace with a sewing speed of 4300 spm: .....L_{pA} = 74 dB(A) ■
(Noise measurement in accordance with DIN 45 635-48-B-1, ISO 11204, ISO 3744, ISO 4871)

▲ Subject to alterations

◆ Due to the use of network filters there is a nominal leakage current of ≤ 5 mA.

■ K_{pA} = 2,5 dB

4 Disposal of Machine

- Proper disposal of the machine is the responsibility of the customer.
- The materials used for the machine are steel, aluminium, brass and various plastic materials. The electrical equipment comprises plastic materials and copper.
- The machine is to be disposed of according to the locally valid pollution control regula-tions; if necessary, a specialist ist to be commissioned.



Care must be taken that parts soiled with lubricants are disposed of separately according to the locally valid pollution control regulations!

5 Transportation, packing and storage

5.01 Transportation to customer's premises

The machines are delivered completely packed.

5.02 Transportation inside the customer's premises

The manufacturer cannot be made liable for transportation inside the customer's premises nor to other operating locations. It must be ensured that the machines are only transported in an upright position.

5.03 Disposal of packing materials

The packing materials of this machine comprise paper, cardboard and VCE fibre. Proper disposal of the packing material is the responsibility of the customer.

5.04 Storage

If the machine is not in use, it can be stored as it is for a period of up to six months, but It should be protected against dust and moisture.
If the machine is stored for longer periods, the individual parts, especially the surfaces of moving parts, must be protected against corrosion, e.g. by a film of oil.

6 Explanation of symbols

In this instruction manual, work to be carried out or important information is accentuated by symbols. These symbols have the following meanings:



Note, information



Cleaning, care



Lubrication

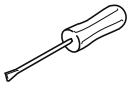

Maintenance, repairs, adjustment, service work
(only to be carried out by technical staff)

7 Controls

7.01 On/off switch

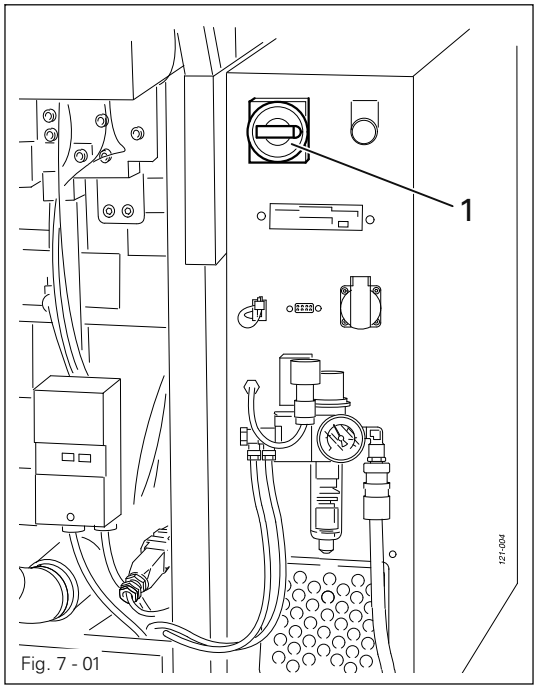

Fig. 7 - 01

- Switch the machine on or off by turning main switch **1.**

7.02 Machine control unit button

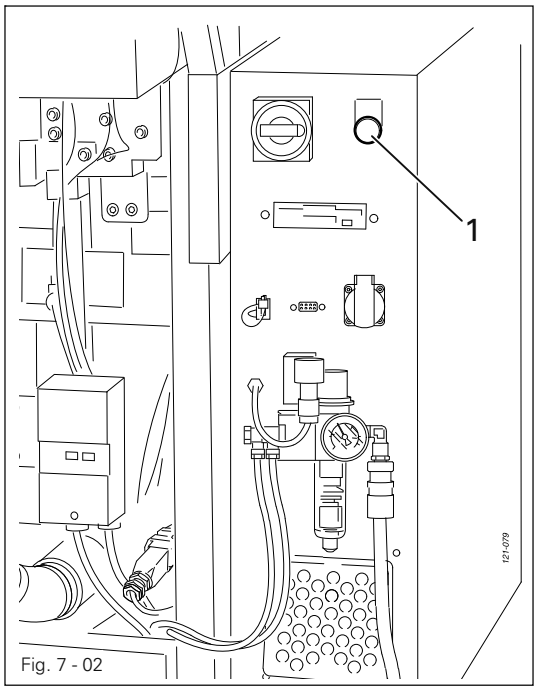

Fig. 7 - 02

- After the power supply has been switched on with the main switch, see Chapter **7.01. Main Switch**, press button **1** to switch on the machine control unit and make the machine ready for operation.

When the machine is ready for operation, button **1** lights up.

7.03 Switch for the extractor fan (optional)

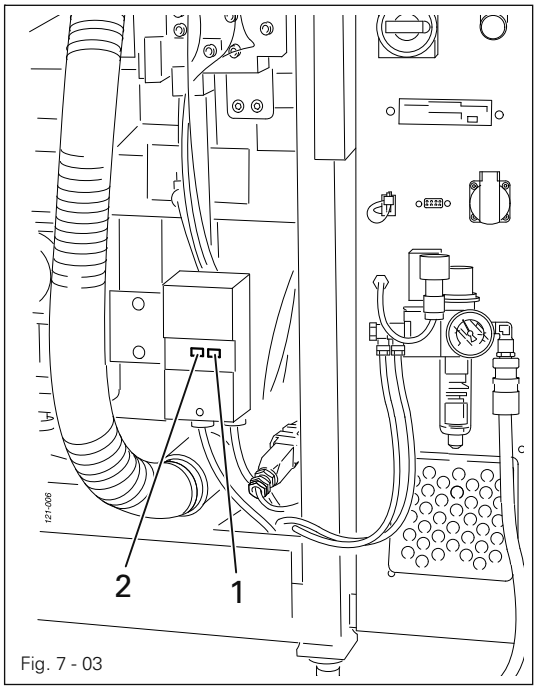

Fig. 7 - 03

The extractor fan integrated in the machine is only required, if there is no vacuum network at the machine's location.

- Press key **1** to switch on the extractor fan.
- Press key **2** to switch off the extractor fan.

7.04 Emergency-off button

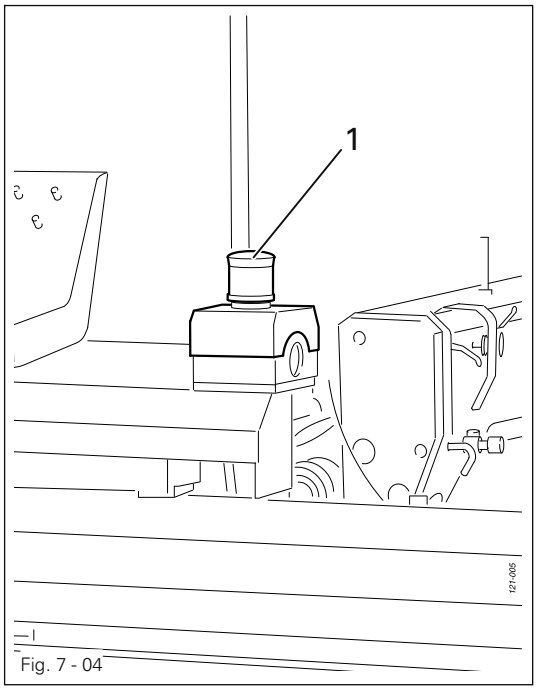

Fig. 7 - 04

- In the event of emergencies, press the emergency-off button **1** to stop the machine immediately.

The emergency-off button **1** may only be pressed in cases of emergency!

After pulling up the pressed EMERGENCY-OFF button **1,** the machine can be switched back on again with the button on the machine control unit, see Chapter **7.02 Machine control unit button.**

7.05 Control panel

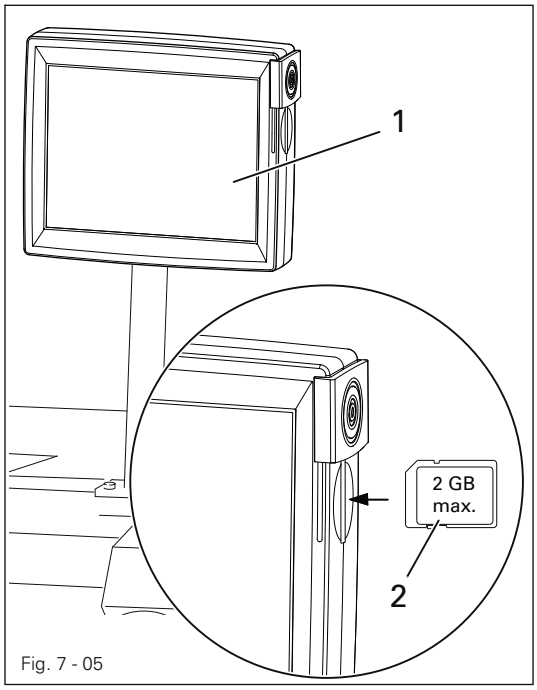

Fig. 7 - 05

The current operating conditions are displayed on control panel **1.** Operation takes place in a constant dialogue between the control unit and the operator. For this purpose, depending on the operating condition of the machine, different symbols and/or texts are displayed. If the symbols or texts are framed, these show functions which can be selected by pressing the appropriate position on the monitor. By pressing the corresponding function this is carried out or switched on or off immediately, or a further menu appears, e.g. for entering a value. Activated functions are shown with inverted symbols. Unframed symbols or texts are only used for display purposes and cannot be selected by pressing.

To read sewing programs or install machine software, use the sd-card **2** in the control panel.

7.06 Pedal

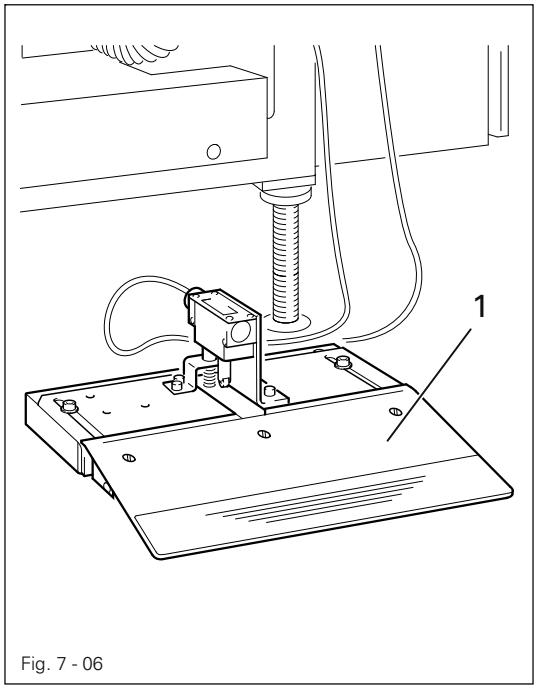

Fig. 7 - 06

- The suction air for the loading table and the positioning tube are switched on and off by operating pedal **1.**

7.07 Start keys

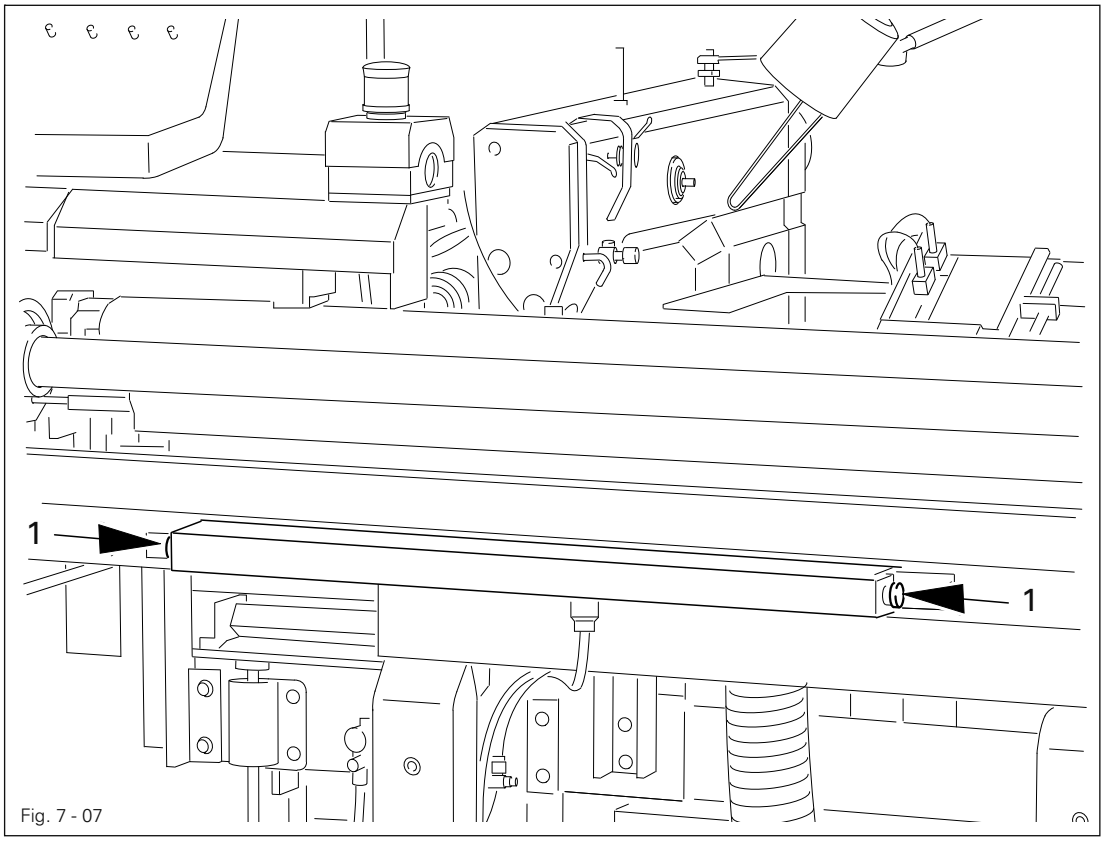

Fig. 7 - 07

- By pressing both start keys **1** at the same time, the sewing cycle is started.

After the sewing cycle has been completed, the illuminated start keys **1** indicate that the next sewing cycle can be started.

- If the threading aid is activated, by pressing both start keys **1** at the same time, the loading table is moved forward and the hook area of the sewing head becomes accessible.

8 Installation and commissioning

This machine may only be installed and commissioned by qualified specialists!
All relevant safety regulations are to be adhered to!

8.01 Installation

Suitable connections for the supply of electricity and compressed air must be available at the machine site, see Chapter **3 Specifications.**
It must also be ensured that the standing surface of the machine site is firm and horizontal, and that sufficient lighting is provided.

8.01.01 Aligning the machine

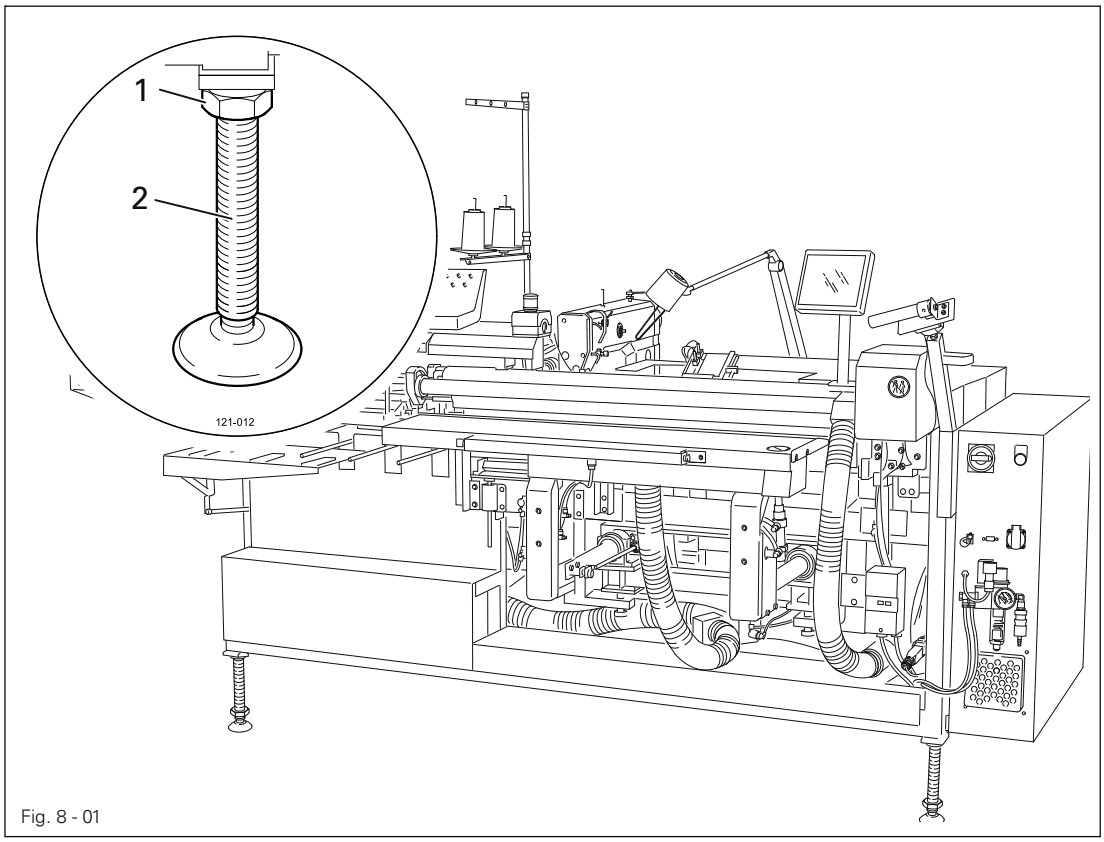

Fig. 8 - 01

- Loosen nut **1** and turn foot **2** so that the machine stands horizontally.
- Tighten nut **1.**

The alignment of the bottom frame tubes can be checked with the aid of a spirit level.

8.01.02 Detaching the transit lock on the loading table

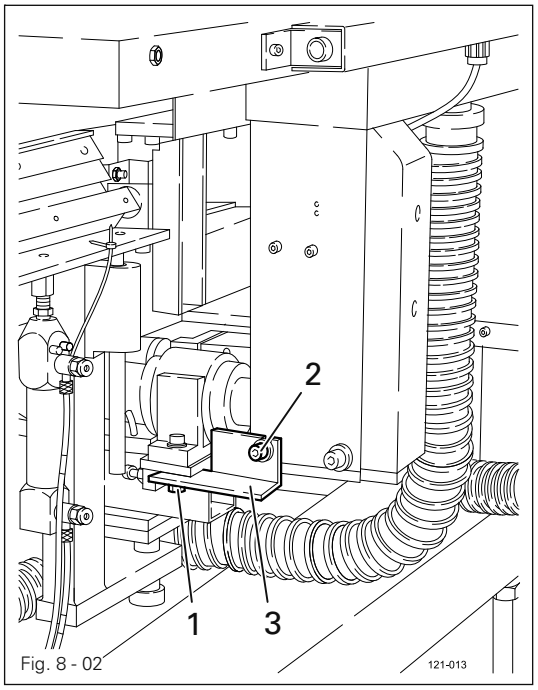

Fig. 8 - 02

- Remove screw **1**.
- Loosen screw **2** and remove bracket **3**.
- Re-tighten screw **2**.

8.01.03 Detaching the transit lock on the sewing head

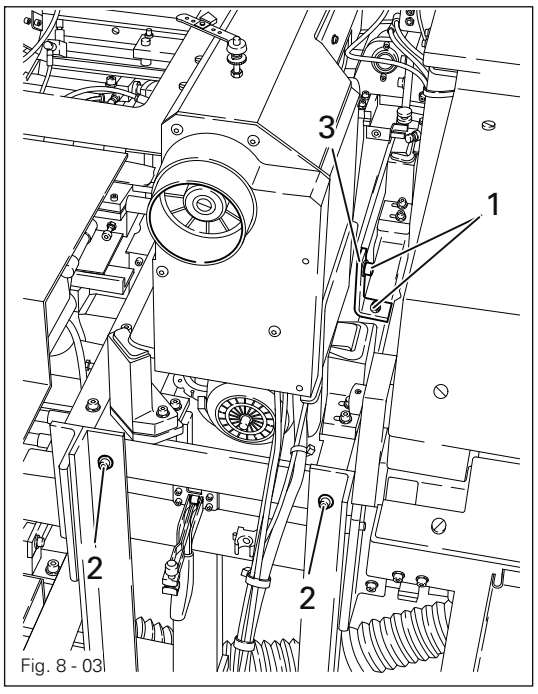

Fig. 8 - 03

- Remove screws **1** und **2**.
- Remove bracket **3**.

8.01.04 Detaching the transit lock on the loading clamp

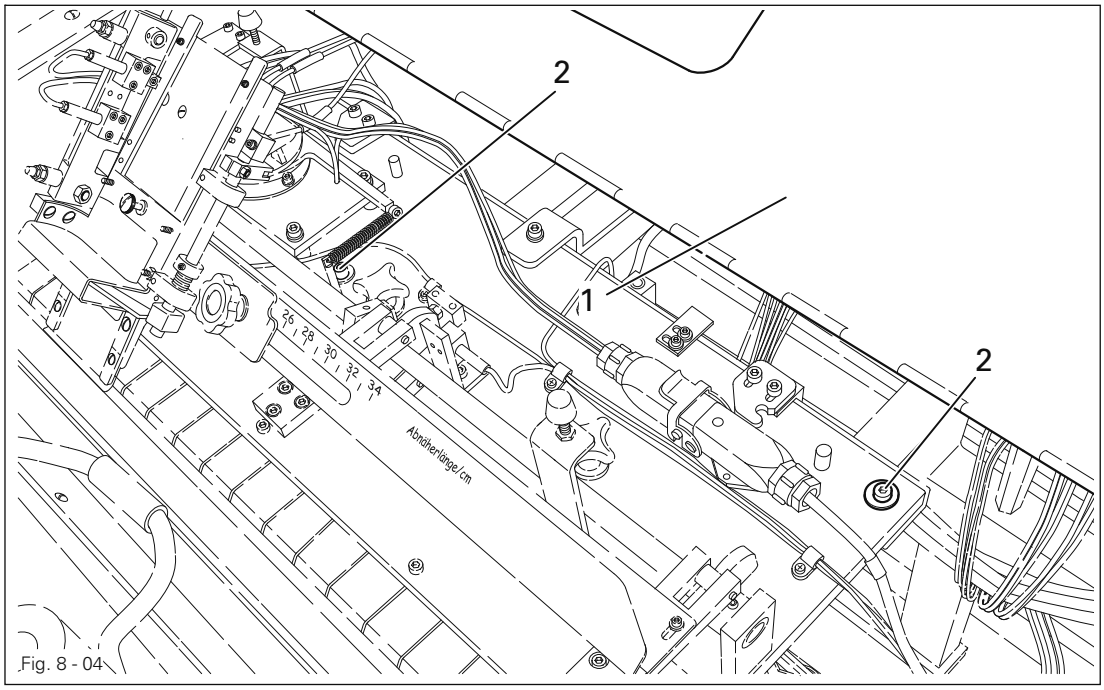

Fig. 8 - 04

- Open cover **1.**
- Remove screws **1.**
- Close **1** cover **1.**

8.01.04 Fitting the reel stand

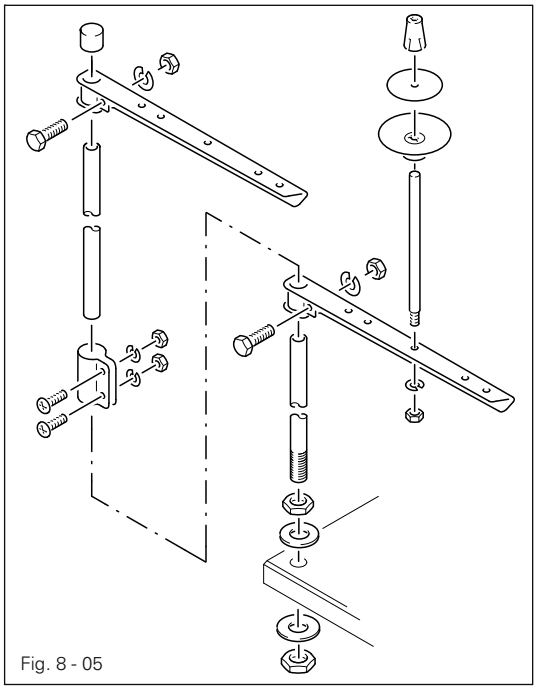

Fig. 8 - 05

- Fit the reel stand as shown in Fig. **8 - 04.**
- Afterwards fit the stand into the hole on the machine stand and fasten it with the enclosed nuts.

8.01.05 Connecting the pedal

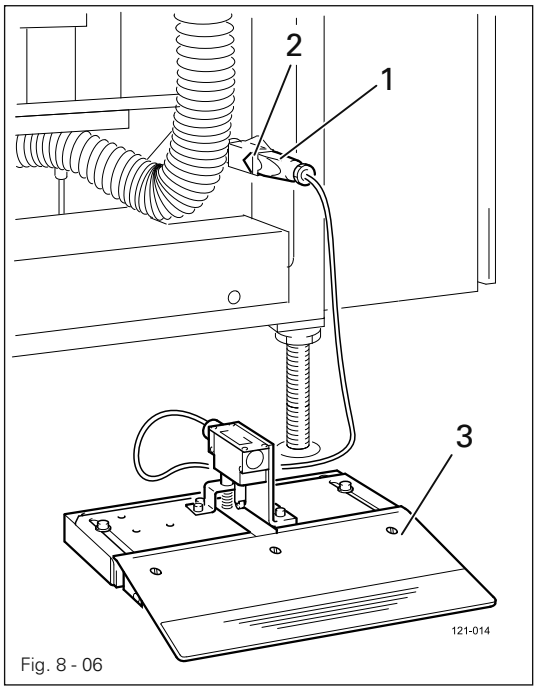

Fig. 8 - 06

- Insert plug **1** in the corresponding socket on the machine stand.
- Secure the plug connection with pin **2.**



Fasten the lead to pedal **3** to the machine stand (e.g. with cable binders) to avoid the danger of tripping over it!

8.02 Commissioning

- Before commissioning the machine, clean it thoroughly and lubricate it, or fill in oil, see Chapter **12 Care and Maintenance!**
- Check the machine, in particular the electric cables and the pneumatic connection tubes, for any damage.
- Have a qualified person check whether the motor can be driven with the existing power voltage.



If there are any differences, the machine must definitely not be operated!



The machine must only be connected to a suitably earthed socket!

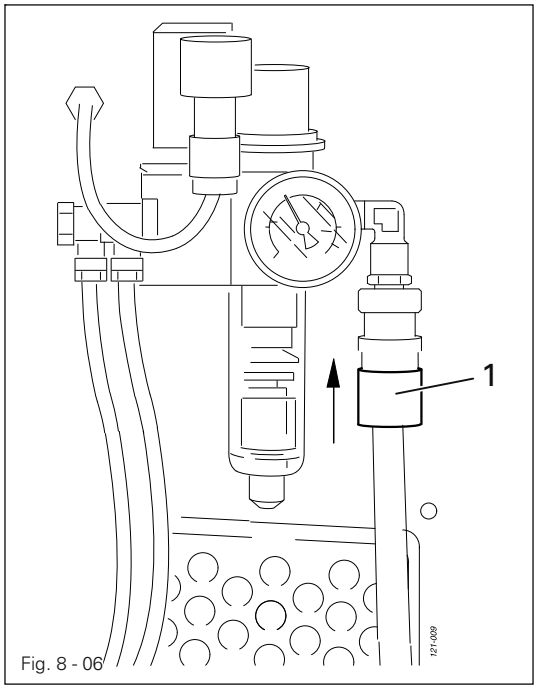

Fig. 8 - 06

- Connect the machine to the compressed air system and push up sliding seal **1.**
- There must be a supply pressure of **6** bar. If necessary, set this value, see Chapter **12.06 Checking / adjusting the air pressure.**

8.03 Switching the machine on / off

Switching on the machine

- Switch on the main switch, see Chapter **7.01 Main switch**.
- Switch on the machine control unit, see Chapter **7.02 Machine control unit button**.

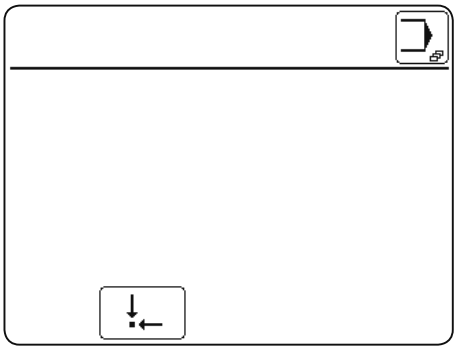

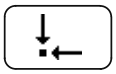

- After booting the machine control unit, move the machine to its basic position to confirm the switch-on operation.
- If required switch on the extractor fan, see Chapter **7.03 Extractor fan switch.**
- Carry out a test run, see Chapter **10 Sewing**.

Switching off the machine

- Switch off the main switch.

Explanation of the other functions on the display



Input menu

This function is used to call up the input mode, see Chapter **11 Input**.

8.04 Adjusting the control panel (only on machines with control panel BDF T1)

- Switch on the machine.



- Call up the input mode.

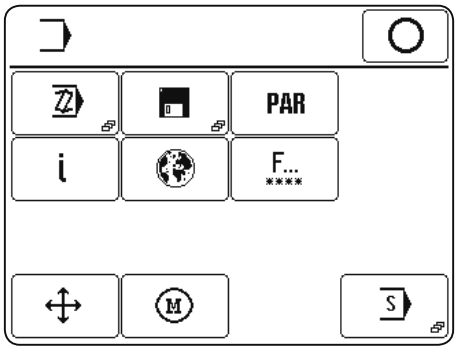

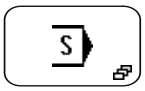

- Select the service menu.

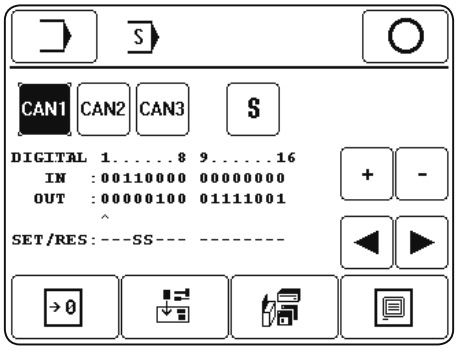



- Select control panel functions.

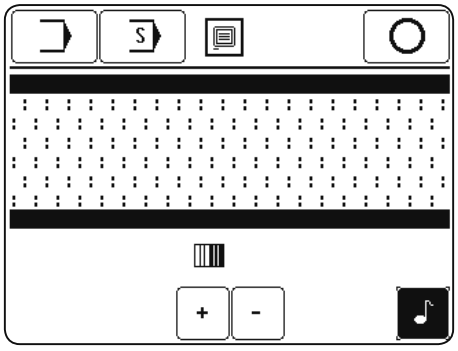

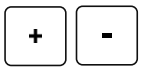

- Change the display contrast.



- Switch the key tone off or on.



Never reduce the display contrast to the extent, that the display can no longer be read!



- Conclude the input.

9 Preparation

All regulations and instructions in this Instruction Manual are to be observed! Special attention is to be paid to the safety regulations!

All preparation work is only to be carried out by appropriately trained personnel. Before all preparation work, the machine is to be separated from the electricity supply by removing the plug from the mains or switching off the On/Off switch!

9.01 Inserting the needle

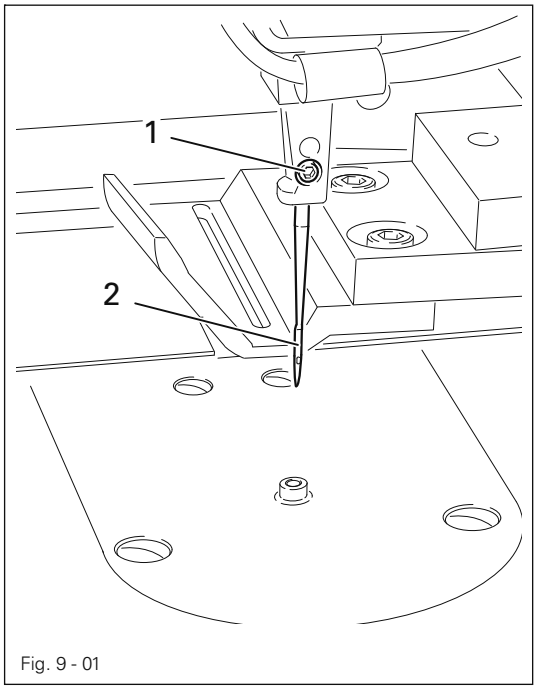

Fig. 9 - 01

Only use needles from the system intended for the machine, see Chapter **3 Specifications**.

- Switch on the machine.
- Call up the threading aid.
  The feed bar moves out of the needle area, the sewing foot is lowered and the sewing start function is locked.
- Loosen screw **1.**
- Lower needle **2** to the limit stop.
- The long needle groove must be facing forwards.
- Tighten screw **1.**

- Bring the machine into its last position before threading

or

- Bring the machine into its basic position.

9.02 Threading the needle thread / Adjusting the needle thread tension

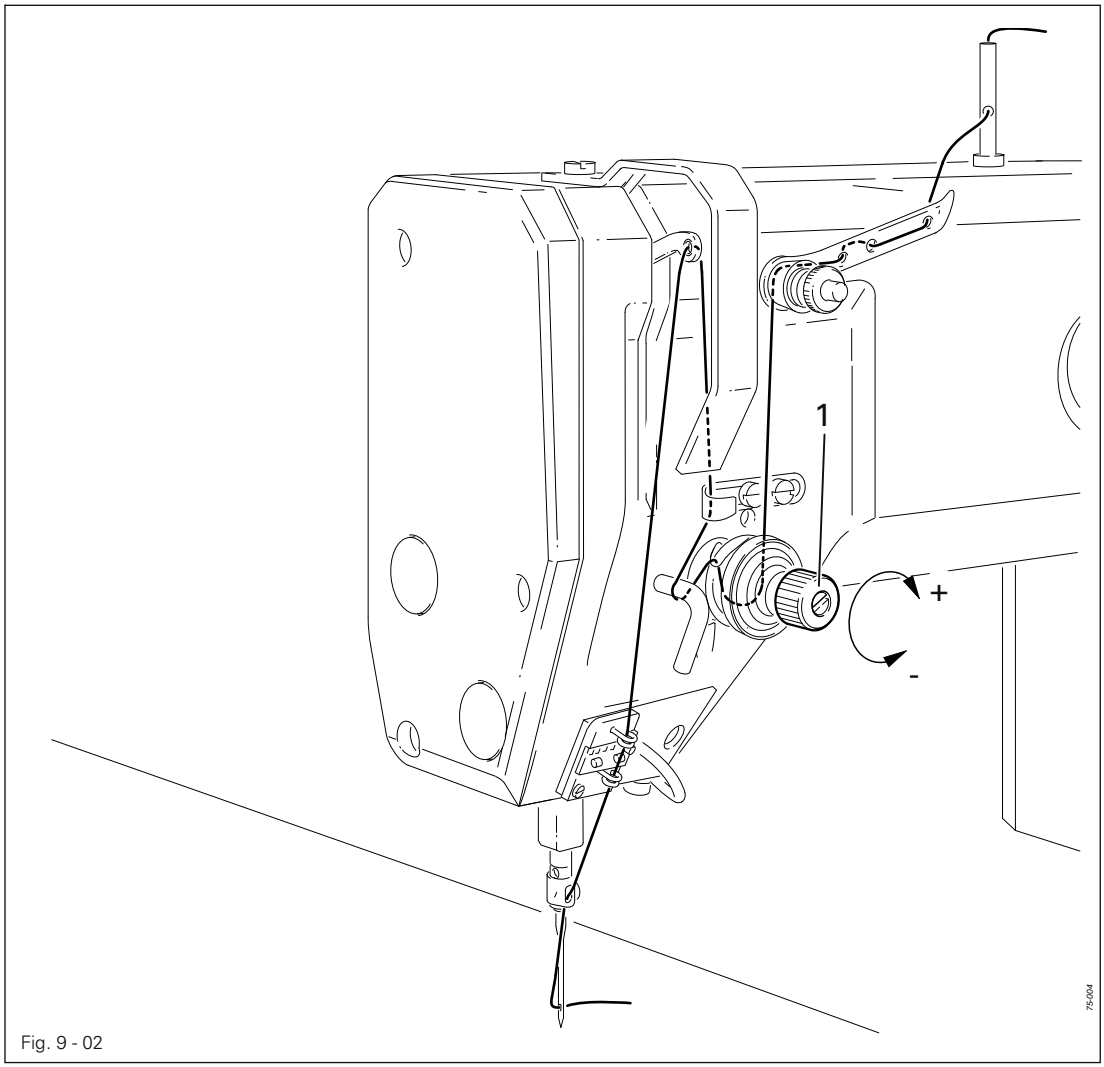

Fig. 9 - 02

- Switch on the machine.
- Call up the threading aid.
  The feed bar moves out of the needle area, the sewing foot is lowered and the sewing start function is locked.
- Thread the machine as shown in Fig. **9-02.**
- Adjust the needle thread tension by turning disk **1.**.

- Bring the machine into its last position before threading

or

- Bring the machine into its basic position.

9.03 Winding the bobbin thread / regulating the bobbin winder tension

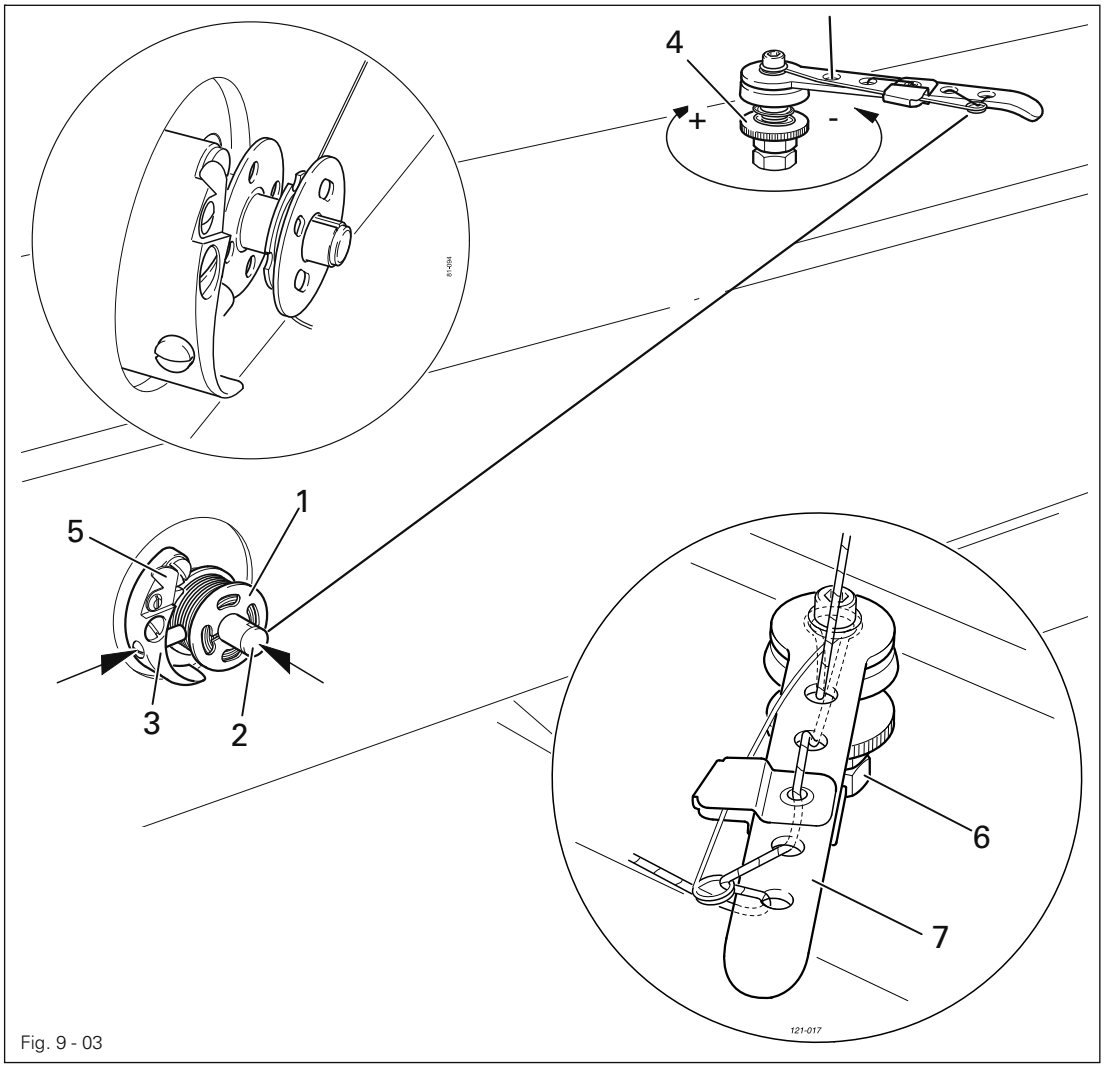

Fig. 9 - 03

- Fit empty bobbin **1** onto bobbin winder spindle **2** with the rest thread chamber on the outside.
- Thread the thread as shown in Fig. **9.03** and wind it around the bobbin **1** a few times in an anti-clockwise direction.
- Switch on the bobbin winder by pressing bobbin winder spindle **2** and lever **3** simultaneously.

The bobbin fills up during sewing.

- To adjust the bobbin winder tension turn knurled screw **4.**
- The bobbin winder stops automatically, when bobbin **1** is filled sufficiently.
- Remove the filled bobbin **1** and cut the thread on knife **5.**

If the thread is wound unevenly, loosen nut **6** and turn thread guide **7** accordingly. Retighten nut **6** after the adjustment.

9.04 Changing the bobbin / adjusting the bobbin thread tension

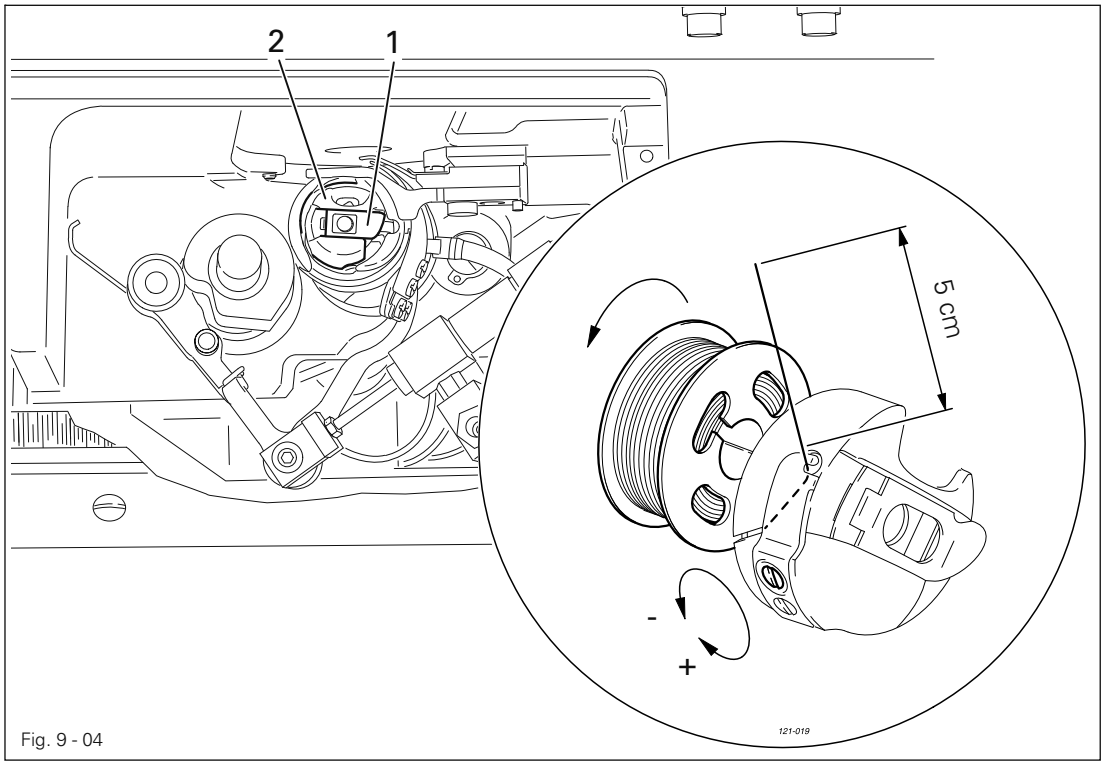

Fig. 9 - 04

- Switch on the machine.
- Call up the threading aid.
  The feed bar moves out of the needle area, the sewing foot is lowered and the sewing start function is locked.
- Press both start keys at the same time, see Chapter 7.07 Start keys.
- The loading table moves forwards and the hook area of the sewing machine head becomes accessible.
- Pull up latch 1 and take out bobbin case 2 together with the bobbin.
- Insert the filled bobbin in the bobbin case as shown in the above illustration (when the thread is drawn, the bobbin should turn in the direction of the arrow).
- Lead the thread through the slot under the spring as shown in Fig. 9.04.
- Adjust the bobbin thread tension by turning screw 3.
- Pull up latch 1 and insert bobbin case 2 together with the bobbin in the hook.
- Release latch 1 and press the bobbin case into the hook until you feel it click into place.
-

- Bring the machine into its last position before threading

or

- Bring the machine into its basic position.

9.05 Changing the dart insert

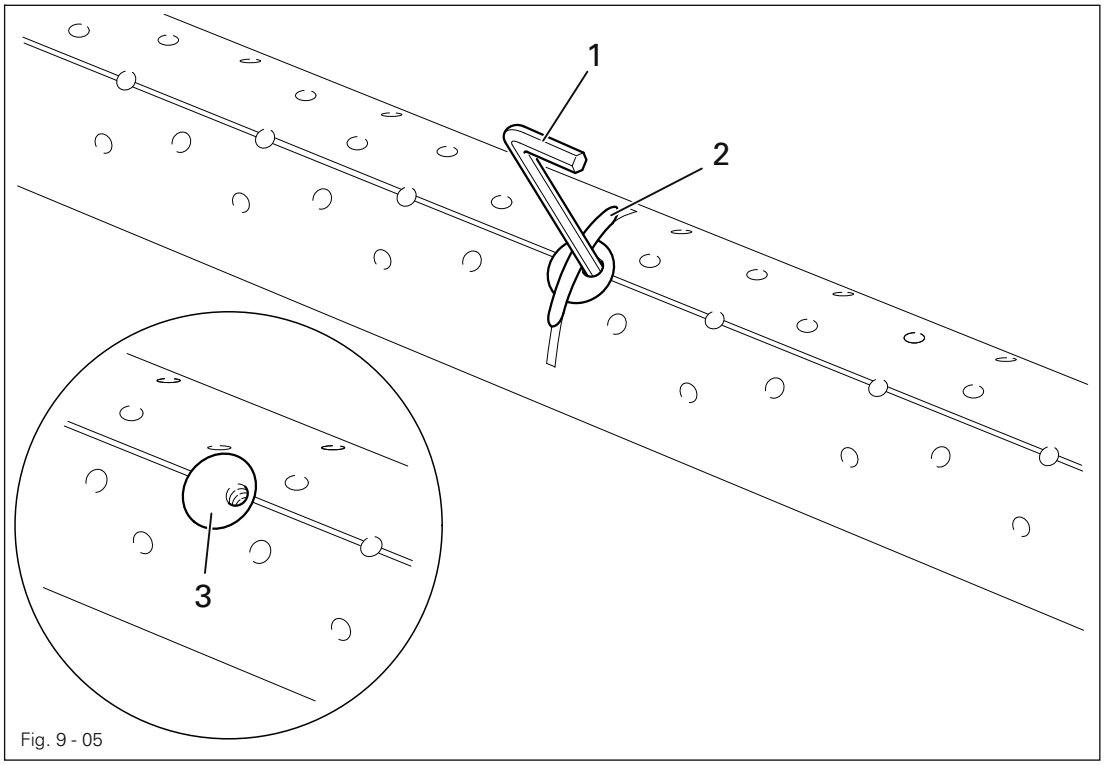

Fig. 9 - 05

- Screw the enclosed pin **1** into the threaded hole in insert **2.**
- Pull out insert **2.**
- Fit new insert to match the dart depth..

Insert blind insert **3** for double pointed darts.

9.06 Adjusting the loading unit for ironing compensation strips

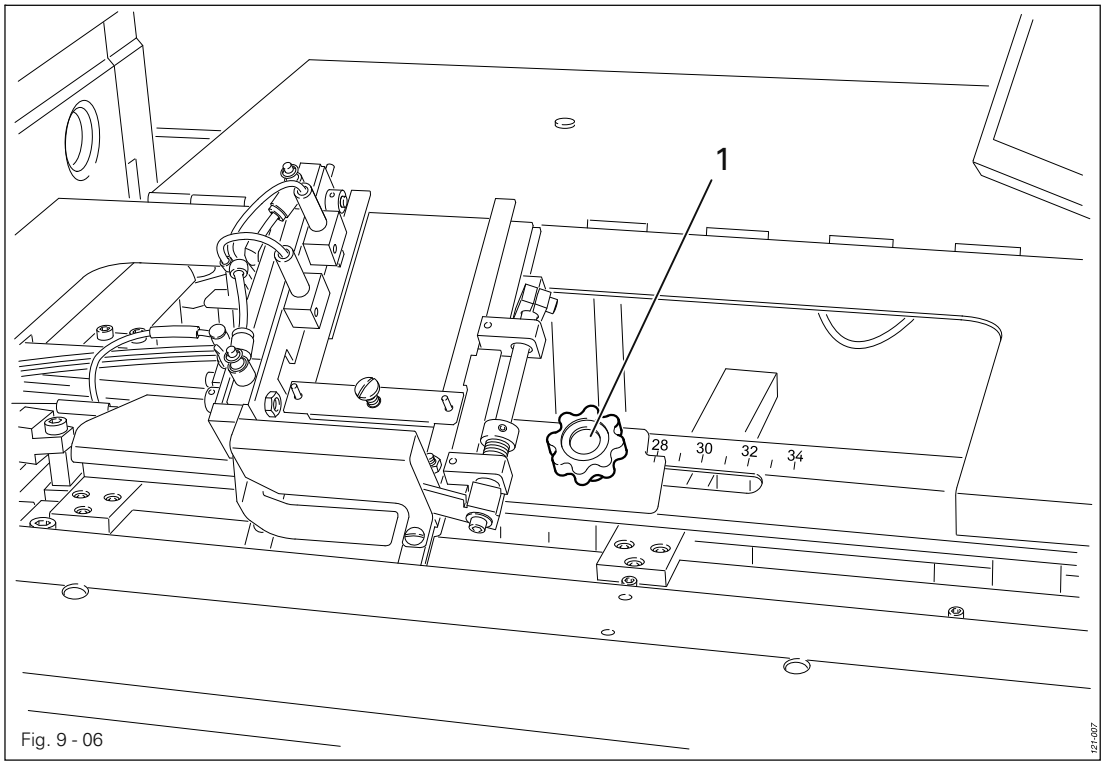

Fig. 9 - 06

- Loosen screw **1**
- Adjust the loading unit for ironing compensation strips to match the dart length.

9.07 Selecting a program number

- Switch on the machine.



- Call up the menu for entering the program number.

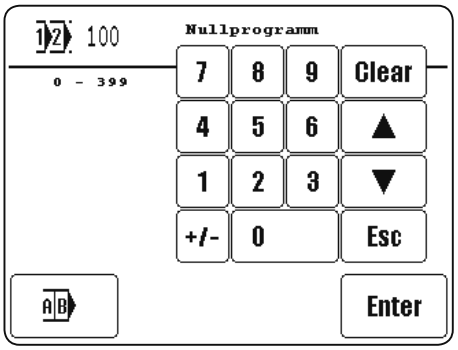



- Select the desired program number.

  The program numbers are allocated as follows:

  Program numbers **0 - 199:** single-pointed darts
  Program numbers **200 - 299:** double-pointed darts
  Program numbers **300 - 399:** tapered darts



- Confirm the selection and quit the selection menu.

Description of the other functions



Clear
This function sets the value at "0".



Arrow keys
These functions increase or reduce the value.

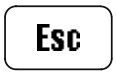

Esc
This function stops the input without taking over the value entered.



Group selection
This function opens the menu for selecting the program group or configuration, see Chapter 9.08 Selecting / configuring program groups.

9.08 Selecting / configuring program groups

9.08.01 Selecting a program group

Instead of selecting a program number, it is also possible to select the corresponding group of seam programs, providing the individual seam program has been allocated to a group, see Chapter **9.08.02 Configuring a program group**.

- Switch on the machine.



- Call up the menu for entering the program number..



- Call up the menu for entering the group number

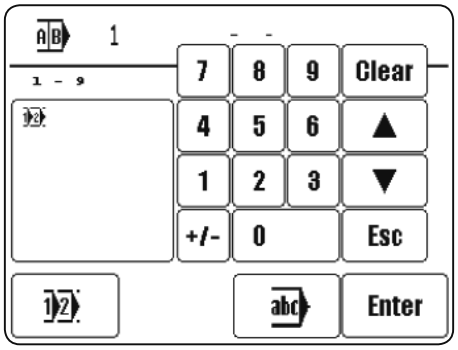



- Select the desired group number.



- Confirm the selection and quit the selection menu.

Description of the other functions



Clear
This function sets the value at "0".



Arrow keys
These functions increase or reduce the value.

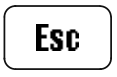

Esc
This function stops the input without taking over the value entered.

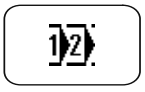

Program number selection
This menu opens the menu for selecting a seam program number, see Chapter **9.07 Selecting a program number.**

9.08.02 Configuring a program group

Up to **10** seam programs can be allocated to a program group. The seam programs of a selected program group appear as a function on the display during sewing, and can be selected directly.

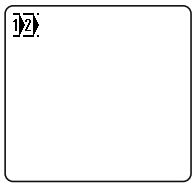

- Call up the menu for entering the group number and select the desired group number without leaving the selection menu, see **9.08.01 Selecting a program group**.
- Select the group programming function.

- Configure the program group from existing seam programs by entering the program numbers on the number block.

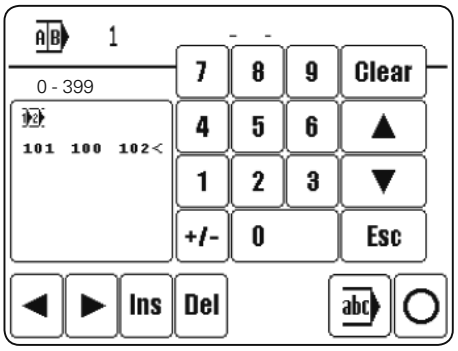

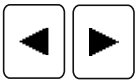

- The cursor in the window shows, which seam program has been taken out of the group, or at which position a new seam program has been inserted. The cursor is moved with the arrow keys.



- If applicable, insert (INS) the seam program at the current cursor position, or delete (DEL) the marked seam program from the sequence.



- Conclude the group programming function.

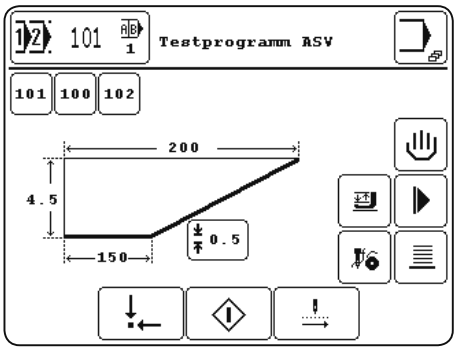

10 Sewing



The machine may only be operated by appropriately instructed personnel! The operating staff must make sure that only authorized persons are in the danger area of the machine!

In particular for the production, in addition to the input mode, see Chapter **11 Input**, the sewing mode is available. Here, depending on the program selection and the machine status, all relevant functions and settings for the production are shown on the display. Automatic operation is standard, but it is possible to switch to manual operation when setting up and checking operating sequences.

Before production the following conditions must be fulfilled:

- All safety devices must be attached and all covers closed, see Chapter **1.06 Danger warnings.**
- The machine must be properly installed and commissioned in accordance with Chapter **8 Installation and commissioning**.
- All setting-up work must have been carried out, see Chapter **9 Setting-up**.

10.01 Inserting the workpiece

10.01.01 Inserting the workpiece with the positioning tube

Workpieces with a striped or checked pattern can be aligned with the aid of a laser beam.

Do not look into laser beam either with or without optical equipment!
Danger of injury to the retina from the directed light!

Single pointed darts

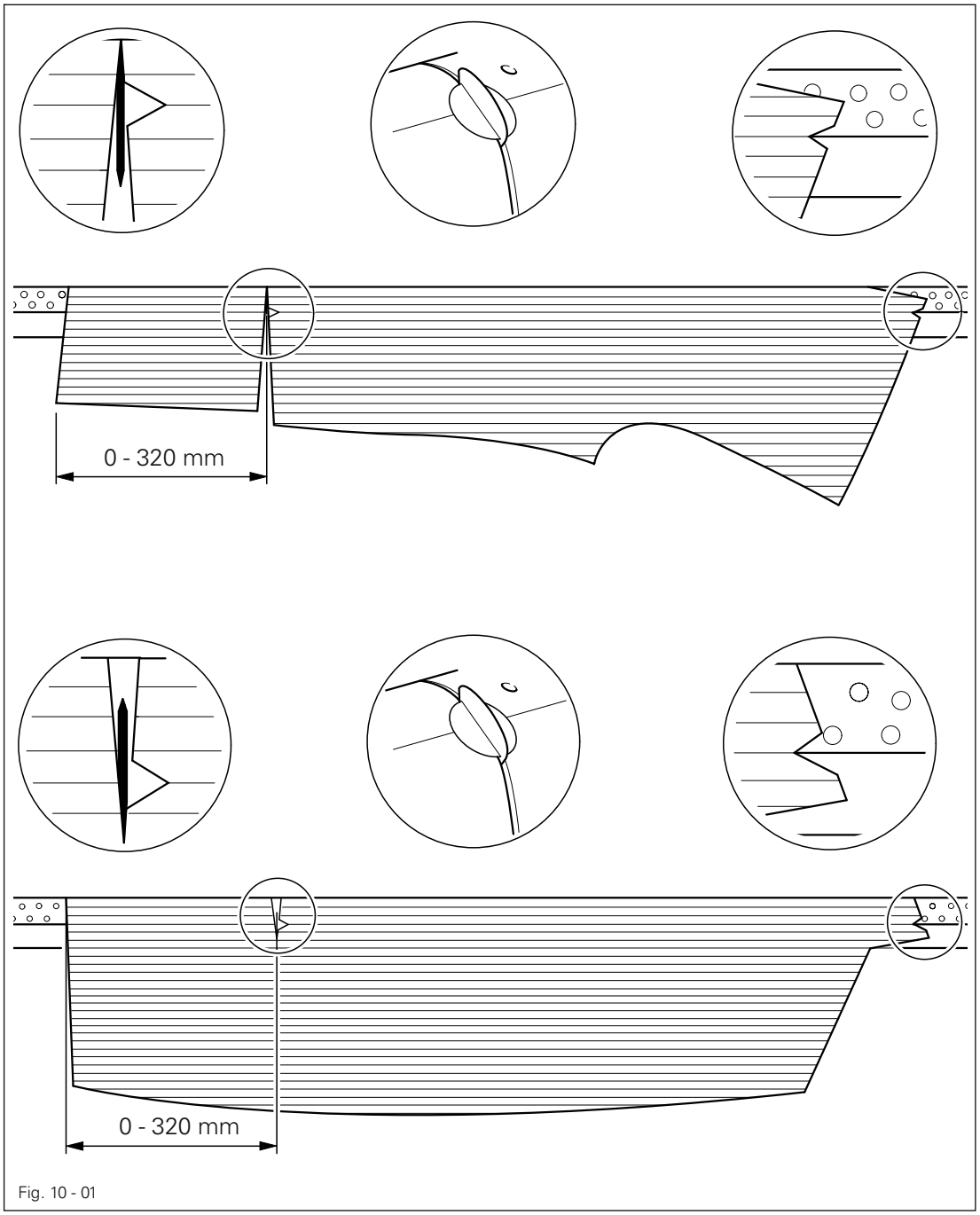

Fig. 10 - 01

Double pointed darts

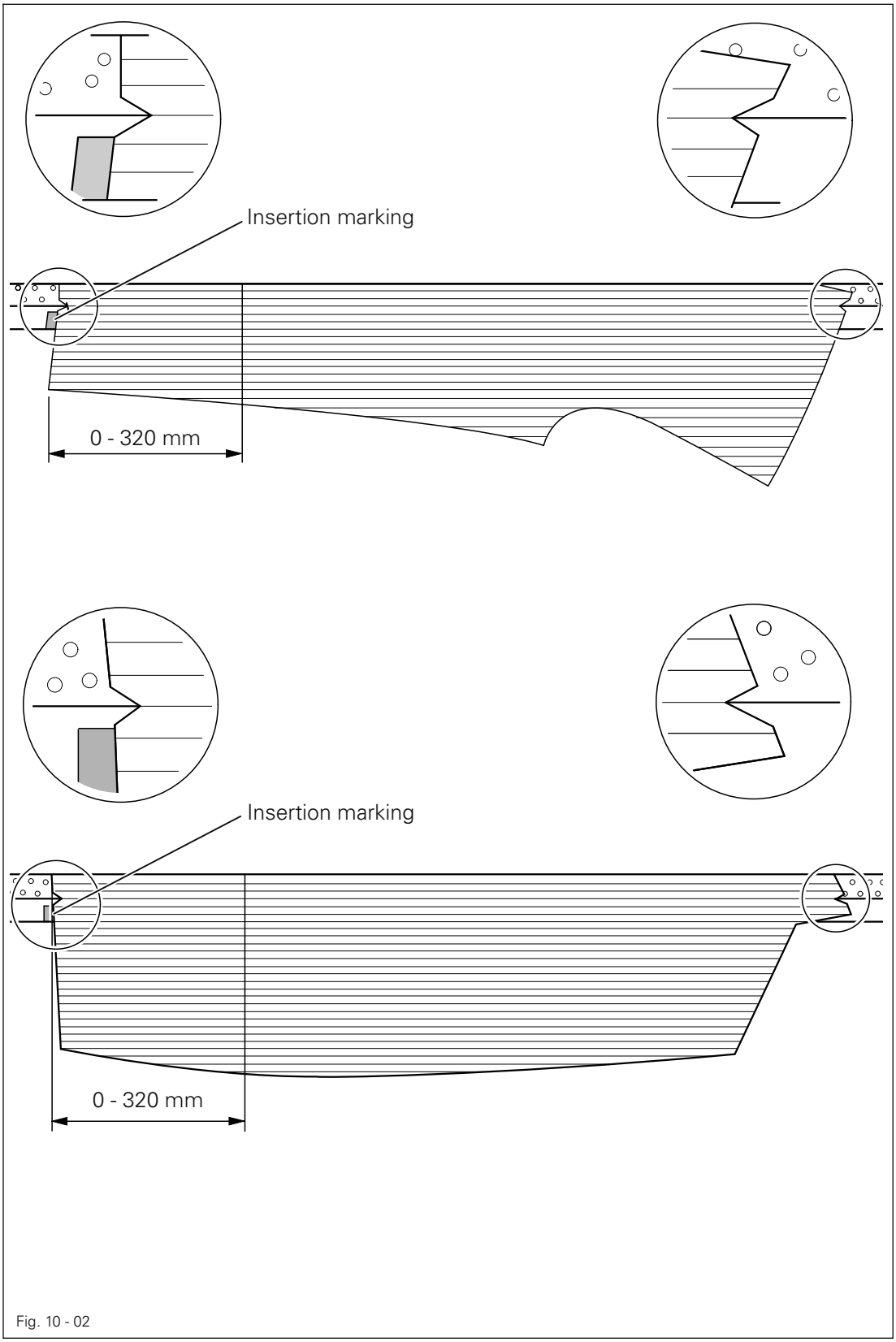

Fig. 10 - 02

10.01.02 Insert the workpiece using the loading table

Double pointed darts

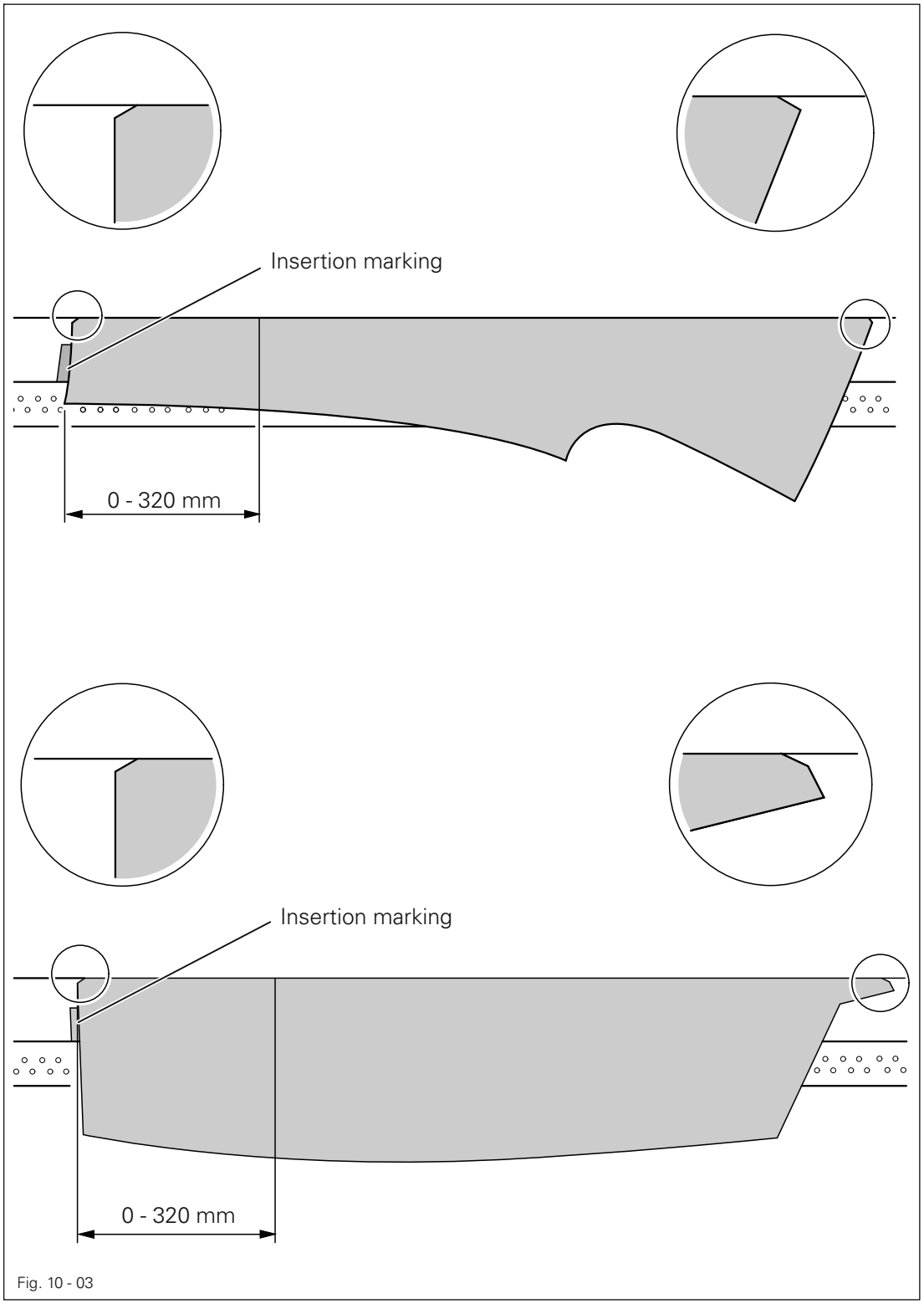

Fig. 10 - 03

10.02 Sewing in automatic operation

When the machine is switched on, the automatic operation function of the sewing mode is always selected automatically.

- Switch on the machine.

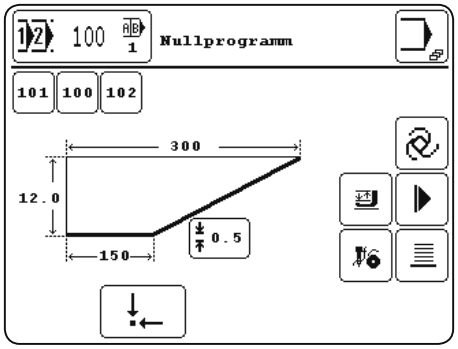

- Switch on the suction air of the positioning tube or the loading table, see Chapter 7.06 Pedal.
- Insert the workpiece, see Chapter 10.01 Inserting the workpiece.
- Operate the start keys to start the sewing cycle, see Chapter 7.07 Start keys.

Description of the functions on the display



Menu for entering the program number
This functions opens the menu for entering the program number, see Chapter 9.07 Selecting the program number.



Input menu
This function is used to call up the input mode, see Chapter 11 Input.



Program selection
Each of these functions is used to select a program from the respective program group, also see Chapter 9.08 Selecting / configuring program groups.

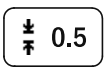

Material thickness
This function opens a menu for changing the material thickness.



Automatic operation
This function shows the actual operating mode and changes between automatic and manual operation.



Sewing foot up/down
This function is used to raise or lower the sewing foot.



Right/left part
This function is used to switch the automatic change from the right to the left part on or off. The part currently being processed is shown.



Threading aid
This function activates the threading aid, see e.g. Chapter 9.01 Inserting the needle.



Stacker up/down
This function is used to raise or lower the stacker.



Stop
(This function only appears during the sewing cycle.)
This function is used to stop the sewing cycle.



Start
(This function only appears if the sewing cycle was stopped.)
This function is used to start the sewing cycle.

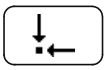

Basic position
This function is used to bring the machine into the basic position.

10.03 Manual sewing mode

- Switch on the machine.
- Call up the manual sewing mode..

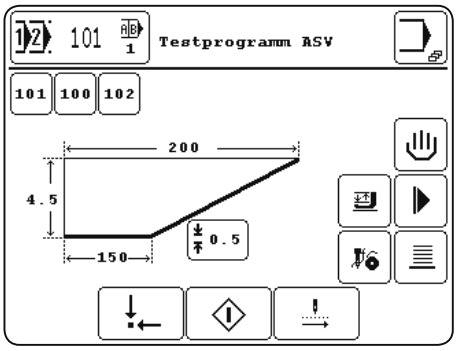

- Switch on the suction air of the positioning tube or the loading table, see Chapter 7.06 Pedal.
- Insert the workpiece, see Chapter 10.01 Inserting the workpiece.

Description of the functions on the display

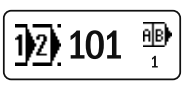

Menu for entering the program number
This functions opens the menu for entering the program number, see Chapter 9.07 Selecting the program number.



Input menu
This function is used to call up the input mode, see Chapter 11 Input.



Program selection
Each of these functions is used to select a program from the respective program group, also see Chapter **9.08 Selecting / configuring program groups**.

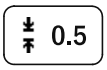

Material thickness
This function opens a menu for changing the material thickness.



Manual operation
This function shows the current operating mode and changes between manual and automatic operation.



Sewing foot up/down
This function is used to raise or lower the sewing foot.



Right/left part
This function is used to switch the automatic change from the right to the left part on or off. The part currently being processed is shown.



Threading aid
This function activates the threading aid, see e.g. Chapter **9.01 Inserting the needle**.



Stacker up/down
This function is used to raise or lower the stacker.



Stop
(This function only appears during the sewing cycle.)
This function is used to stop the sewing cycle.



Start
(This function only appears if the sewing cycle was stopped.)
This function is used to start the sewing cycle.

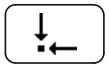

Basic position
This function is used to bring the machine into the basic position.

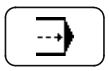

Tacting through the loading cycle
This function is used to tact through the material loading cycle step by step.

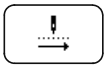

Tacting forwards
This function is used to tact forwards through the sewing cycle step by step
.

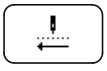

Tacting in reverse
This function is used to tact in reverse through the sewing cycle step by step.

10.04 Error messages

If a malfunction occurs, an error code appears on the display. An error message may be caused by incorrect operation, machine defects, as well as by overload conditions.
(For a description of the error codes see Chapter **14.02 Description of the error codes)**.

Errors when connecting outputs

If an error occurs when connecting an output, the output concerned is shown with the desired switching state (**0)** or (I).
In this case (**0)** means the output should be disconnected and (I) means that the output should be connected.
In the next line the cause leading to the error is displayed.
The target state for maintaining undisturbed operation is shown in brackets.
In the following example the output **S5** is to be connected.
Requirement: **E4** must be set at (**1).**

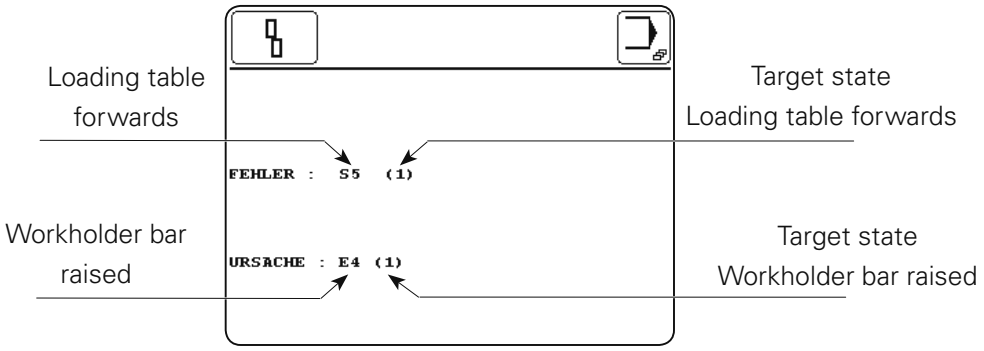

- Check **E4** and eliminate error.

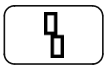

- Acknowledge elimination of the error..

11 Input

In addition to the functions for entering or altering seam programs, in the input mode there are functions for displaying information, for program management, for machine configuration and settings (country settings and access codes etc.), as well as for supporting service and adjustment work.
In the input mode the machine start function is blocked to avoid an unintentional start-up of the machine.

11.01 Overview of the functions in the input mode

- Switch on the machine.



- Call up the input mode.

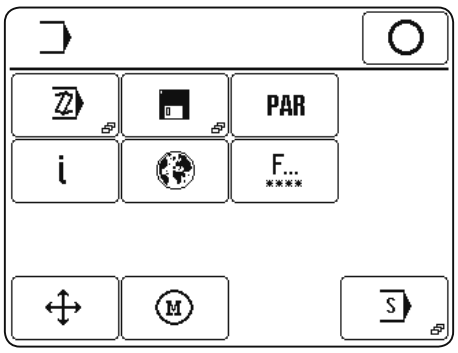

Description of the functions



Conclude input
This function is used to conclude the input, and the machines changes to the sewing mode.

Seam program input

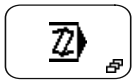

This function is used to call up the menu for entering or altering seam programs, see Chapter **11.02 Creating / altering seam programs.**

Program management

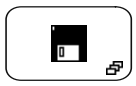

This function is used to manage the data from the machine memory and CD-Card, see Chapter **11.03 Program management.**

Parameter settings



This function is used to call up the menu for altering parameter settings, see Chapter **13.25 Parameter settings**.

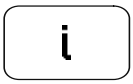

Info

This function opens a menu for displaying the following information:

- current software status of the machine
- current firmware status of the machine
- current firmware status of the control panel
- day piece counter
- stitch counter for bobbin thread monitoring
- operating hours meter
- production hours meter



The day reverse counter and bobbin thread control counter can be reset with the "Clear" function.



Country settings

This function opens a menu for selecting the language shown on the control panel.

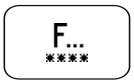

Rights of access

This function opens a menu for fixing the rights of access, see Chapter **11.04 Rights of access.**

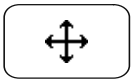

Stepping motors

This function opens a menu for moving the stepping motors.

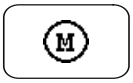

Sewing motor

This function opens a menu for testing and adjusting the sewing motor, see Chapter **13.24 Menu for the sewing motor.**

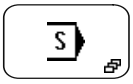

Service menu

This function is used to call up the menu for selecting various service functions, see Chapter **13.23 Service menu.**

11.02 Creating / altering seam programs

When creating or altering seam programs, a basic distinction is made between **3** different seam types:

- Single-pointed darts
  L3 = L4; Program numbers **0** – **199**
- Double-pointed darts
  L3 < 4.5 mm; not to be cut; Program numbers **200** - **299**
- Tapered darts
  L3 < **L4;** Program numbers **300** - **399**

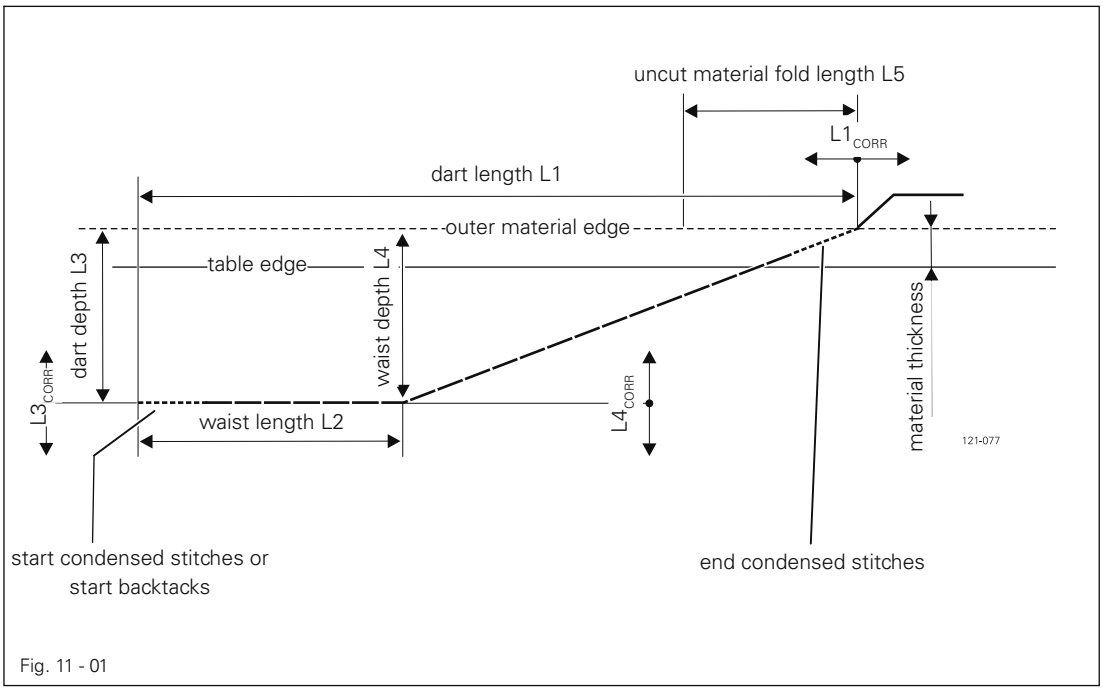

Fig. 11 - 01

Enter the seam program input function by selecting the desired seam type.

- Switch on the machine.



- Call up the input mode.

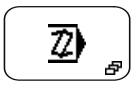

- Call up the seam program input function.

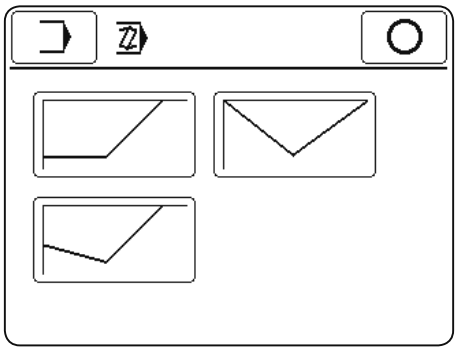

Description of the functions



Input mode
This function is used to changed to the initial state of the input mode.



Conclude input
This function is used to conclude the input, and the machines changes to the sewing mode.

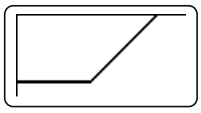

Single-pointed darts
This function is used to call up the input function for single-pointed darts, see Chapter 11.02.01 Creating / altering single-pointed darts.

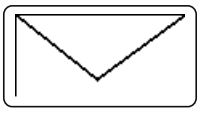

Double-pointed darts
This function is used to call up the input function for double-pointed darts, see Chapter 11.02.02 Creating / altering double-pointed darts.

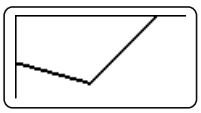

Tapered darts
This function is used to call up the input function for tapered darts, see Chapter 11.02.03 Creating / altering tapered darts.

11.02.01 Creating / altering single-pointed darts

- Switch on the machine.



- Call up the input mode.

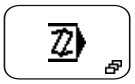

- Call up the seam program input function.

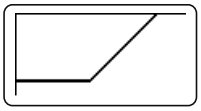

- Call up the input function for single-pointed darts.

- Select the program number, see Chapter **9.07 Selecting a program number**.

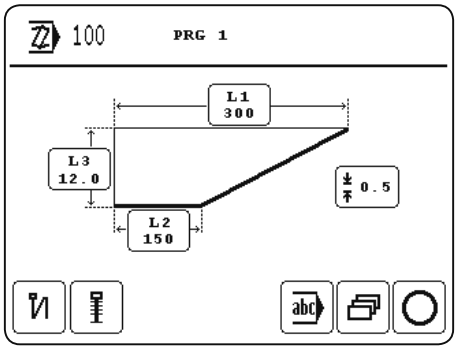

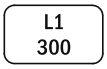

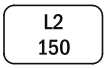

- Enter or alter the values for the dart length **L1,** the waist length **L2** and the dart depth **L3.**

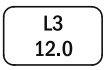

- Enter or alter the material thickness.

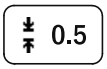

Description of the functions



Start backtacks
This function is used to switch the start backtacks on or off.



Start condensed stitches
This function is used to switch the start condensed stitches on or off.



Comment
This function opens a menu for entering a comment on the current program, see Chapter **11.02.04 Entering a comment**.



Correction value
This function opens a menu for entering the correction value and the uncut material fold length, see Chapter **11.02.05 Entering correction values**.



Conclude programming
This function concludes the seam programming, see Chapter **11.02.06 Conclude seam programming.**

11.02.02 Creating / altering double-pointed darts

- Switch on the machine.



- Call up the input mode.

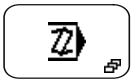

- Call up the seam program input function.

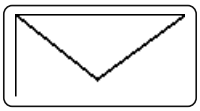

- Call up the input function for double-pointed darts.

- Select the program number, see Chapter **9.07 Selecting a program number**.

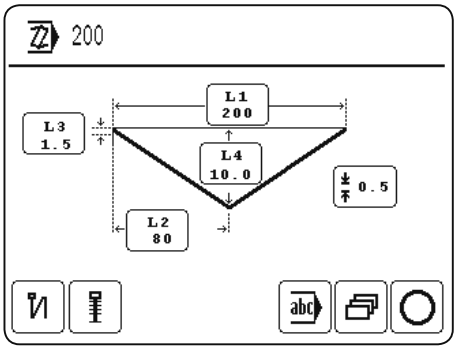

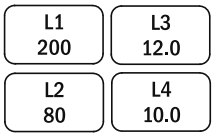

- Enter or alter the values for the dart length **L1,** the waist length **L2,** the dart depth **L3** and the waist depth **L4.**

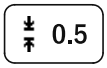

- Enter or alter the material thickness.

Description of the functions



Start backtacks
This function is used to switch the start backtacks on or off.



Start condensed stitches
This function is used to switch the start condensed stitches on or off.



Comment
This function opens a menu for entering a comment on the current program, see Chapter **11.02.04 Entering a comment**.



Correction value
This function opens a menu for entering the correction value and the uncut material fold length, see Chapter **11.02.05 Entering correction values**.



Conclude programming
This function concludes the seam programming, see Chapter **11.02.06 Conclude seam programming.**

11.02.03 Creating / altering tapered darts

- Switch on the machine.



- Call up the input mode.

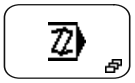

- Call up the seam program input function.

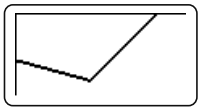

- Call up the input function for tapered darts.

- Select the program number, see Chapter **9.07 Selecting a program number**

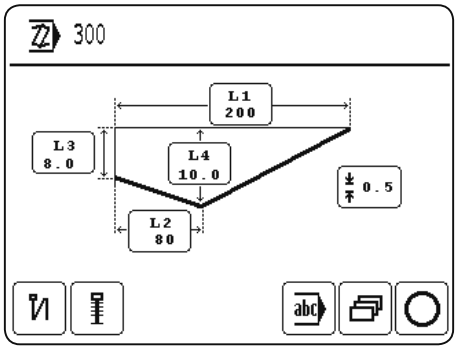

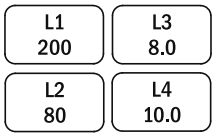

- Enter or alter the values for the dart length **L1,** the waist length **L2,** the dart depth **L3** and the waist depth **L4.**

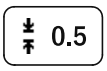

- Enter or alter the material thickness.

Description of the functions



Start backtacks
This function is used to switch the start backtacks on or off.



Start condensed stitches
This function is used to switch the start condensed stitches on or off.



Comment
This function opens a menu for entering a comment on the current program, see Chapter **11.02.04 Entering a comment**.



Correction value
This function opens a menu for entering the correction value and the uncut material fold length, see Chapter **11.02.05 Entering correction values**.



Conclude programming
This function concludes the seam programming, see Chapter **11.02.06 Conclude seam programming.**

11.02.04 Entering a comment



In the seam programming function, it is possible to add a comment to the seam program, after calling up the appropriate function. The comment is displayed as information about the corresponding seam program with the program selection function and the program management function.

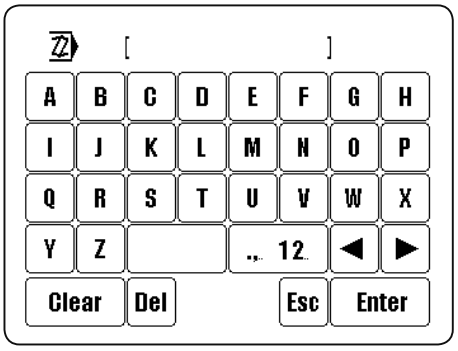

P R G
- Enter the desired text, e.g. "PRG".

.,- 12
- Change to number input.

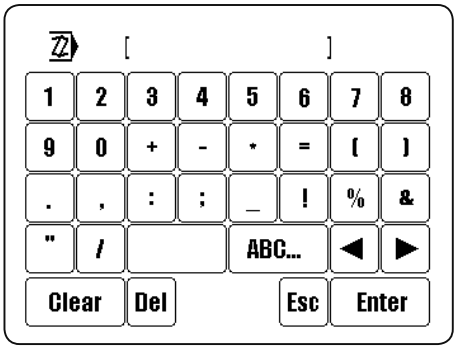

1
- Enter the desired number, e.g. "1".

Enter
- Conclude the comment input.

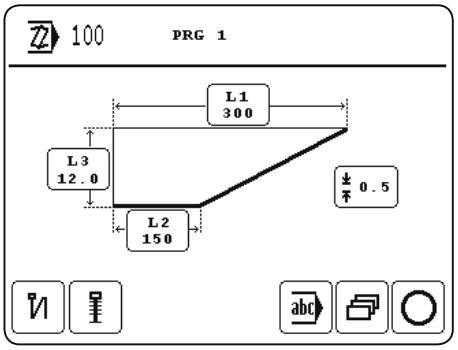

11.02.05 Entering correction values

In the seam programming function, it is possible to enter correction values for the current seam program, after calling up the appropriate function. In the case of single-pointed and tapered darts it is also possible to fix the value for the uncut material fold length.

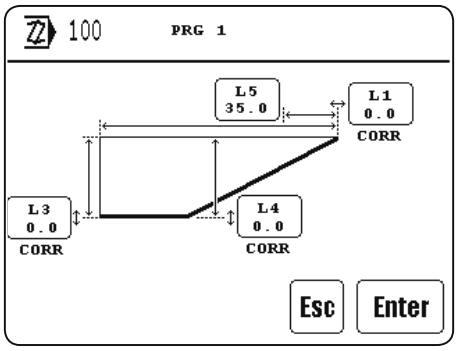

L1 0.0
L3 0.0
L4 0.0

- Enter or change the correction values for the dart length **L1,** the dart depth **L3** and the waist depth **L4.**

L5 35.0

- Enter or change the value for the uncut material fold length.

Enter

- Conclude the input of the correction values.

11.02.06 Concluding seam programming

After all inputs for the programming have been made, the seam programming can be concluded by pressing the corresponding function.

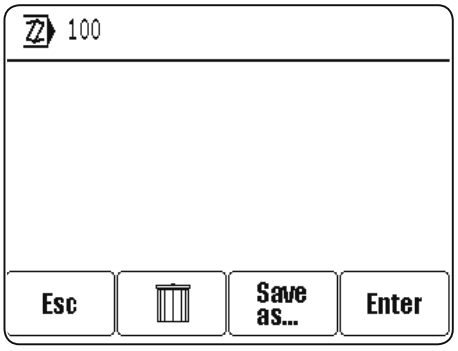

Description of the functions

Esc

Esc

The input is interrupted and the operator returns to the initial status of the programming function.

Reject changes

All program changes are cancelled.

Save as...

Store under

Press this function to open the number panel for entering any given program number.

Enter

Enter

All program changes are stored under the current program number.

11.03 Program management

The program management function is used to manage seam programs as well as configuration and machine data. Files can be selected from the machine memory or from a SD-Card and be copied or deleted.

- Switch on the machine.



- Call up the input mode.

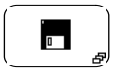

- Call up the program management function.

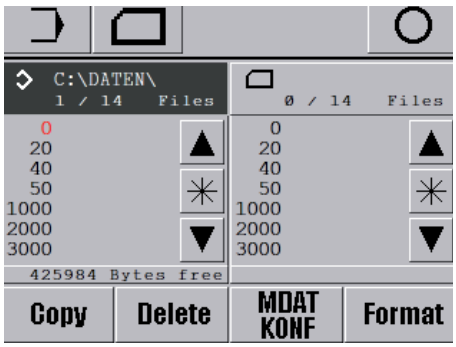

Both data carriers with the corresponding files appear on the display:
- Machine memory ("C:\DATEN\") is currently selected
- SD-Card ( ) is currently inserted

The data carrier is selected by touching the appropriate box, and the content of the appropriate data carrier is also updated. The selected drive is shown as a invers symbol, the selectet files are shown red.

Seam programs are filed at a different level to that for the configuration and machine data, in order to avoid the configuration and machine data being processed by mistake.

Description of the functions



Input mode
This function is used to changed to the initial state of the input mode.



Update disk drives
This function is used to update (upload)the drives.



Conclude input
This function is used to conclude the input, and the machines changes to the sewing mode.

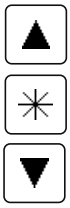

Data selection
With these functions the desired files are marked in the current drive. Individual files are selected with the arrow keys. In combination with the lock key (*) several files can be selected at one time with the arrow keys.



Copy
This function is used to copy the files selected from the current data carrier onto the second data carrier.



Delete
This function is used to delete the selected files.



MDAD/KONF
This function is used to call up the level for the configuration and machine data. The current settings and the machine configuration are stored in the files "MDAT3519" and "KONF3519. BIN". In this way the machine data can be copied on to a CD-Card as a backup, or several machines with the same designation can be configured quickly by reading the machine data.



Format
This function is used to format the CD-Card inserted.



In the course of the formatting operation, all data on the CD-Card is deleted!

11.04 Rights of access

The functions, which can be called up with the control panel, are classified by code numbers and can be protected from unauthorised access. For this purpose, the control unit differentiates between 3 user groups (user 1, 2 and 3), all of which can be assigned a corresponding PIN. If a function is selected, for which the user does not have an authorisation, the user is requested to enter a PIN. After the appropriate PIN has been entered, the selected function is carried out. In addition to the 3 user groups, the control unit also recognises the so-called "super user", who, equipped with a key-switch, has access to all functions and who is authorised to stipulate the rights of access.

- Enter the key-switch and switch on the machine.



- Call up the input mode.

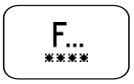

- Call up the menu for entering rights of access.

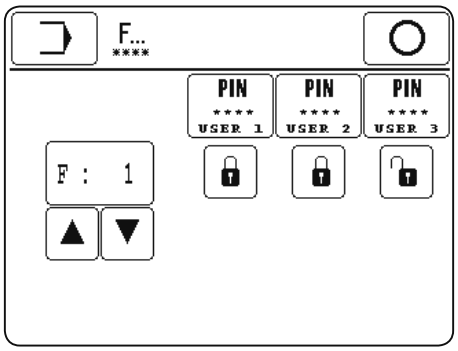

Description of the functions



Input mode
This function is used to change from the initial state to the input mode.



Conclude input
This function is used to conclude the input, and the machines changes to the sewing mode.



Entering the PIN
With this function an individual PIN for each user can be stipulated.

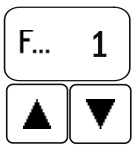

Function selection
These functions are used to select the code number for the function to be locked or released.



Locking/releasing
These functions are used to lock or release the function for the appropriate user.

Allocation of the code numbers

Function	Symbol	Code number	Standard setting		
			User 1	User 2	User 3
Program number selection		0			
Correct program	-	1			
Input		2			
Create program		3			
Program management		4			
Parameter settings	PAR	5			
Parameter group 100 General settings	-	6			
Parameter group 200 Seam parameters	-	7			
Parameter group 300 Sewing motor positions	-	8			
Parameter group 400 Times	-	9			
Parameter group 500 Meters	-	10			
Parameter group 600	-	11			
Parameter group 700 Sewing motor	-	12			
Parameter group 800	-	13			
Parameter group 900 Sewing motor	-	14			
Info		15			
Reset daily piece counter		16			
Reset bobbin thread stitch counter		17			
Reset operating hours meter		18			
Reset production hours meter		19			
Country settings		20			
Rights of access		21			

Function	Symbol	Code number	Standard setting		
			User 1	User 2	User 3
Service		22			
Carry out a cold start		23			
Machine configuration		24			
Load software		25			
Set contrast control panel		26			
Thread trimming cycle		27			
Needle position	POS	28			

12 Care and maintenance

12.01 Maintenance intervals

Clean the entire machine	once a week
Clean the needle area	several times daily
Clean the hook area	several times daily
Clean the fan air filter	as required
Clean the air filter	as required
Check the air pressure	daily, before each start up
Check the oil level	daily, before each start up
Lubricate the cutting device	daily, before each start up
Lubricate the stacker drive	every 6 months



During all cleaning work the machine must be disconnected from the power supply by switching off the main switch or pulling out the plug!
Danger of injury if the machine is started accidentally!

12.02 Cleaning the entire machine

The cleaning cycle required for the machine depends on following factors:

- Single or several shift operation
- Amount of dust resulting from the workpiece

It is therefore only possible to stipulate the best possible cleaning instructions for each individual case.



Disconnect the machine from the electric circuit by switching it off with the on/off switch or by pulling out the mains switch!
Danger of injury if the machine is started unintentionally.



- Clean the entire machine at least once a week.

12.03 Cleaning the needle area and hook compartment

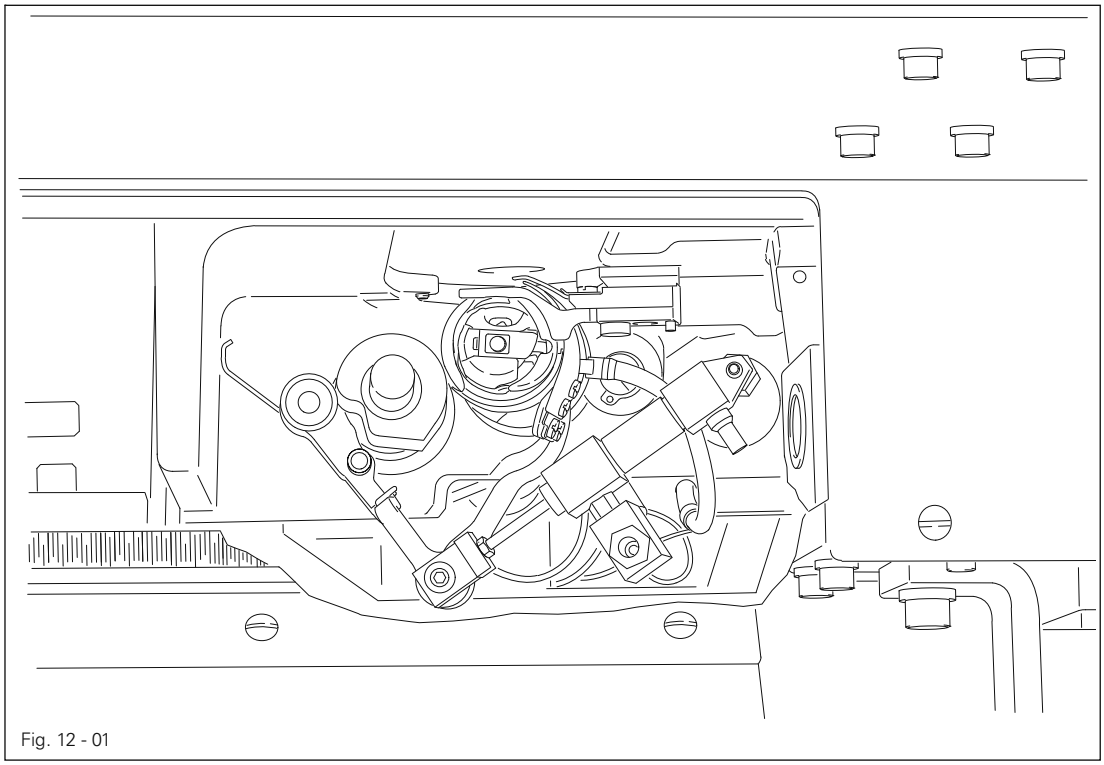

Fig. 12 - 01

- Switch on the machine.
- Call up the threading aid.
  The feed bar moves out of the needle area, the sewing foot is lowered and the sewing start function is locked.
- Press both start keys at the same time, see Chapter 7.07 Start keys.
- The loading table moves forwards and the hook area of the sewing machine head becomes accessible.

- Clean the needle and hook area several times daily.

- Bring the machine into its last position before cleaning

or

- Bring the machine into its basic position.

12.04 Cleaning the fan air filter



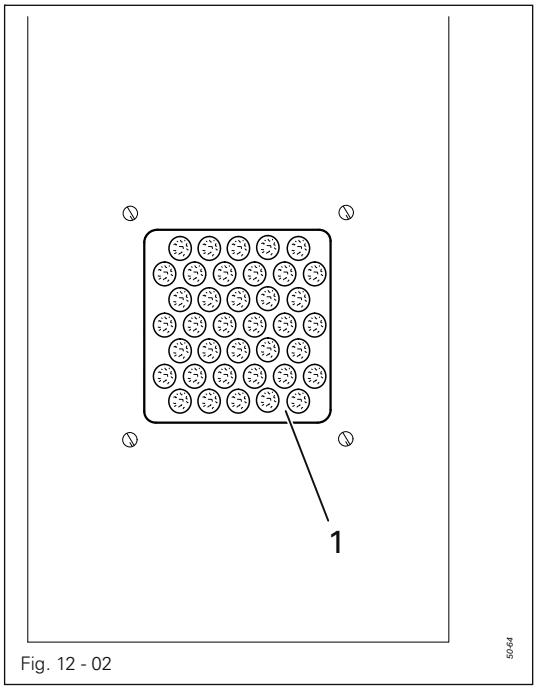

Fig. 12 - 02

- Remove cover **1.**
- Remove the filter unit and blast clean with compressed air.
- Insert the clean filter unit and replace cover **1.**

12.05 Cleaning the air filter of the air-filter/lubricator



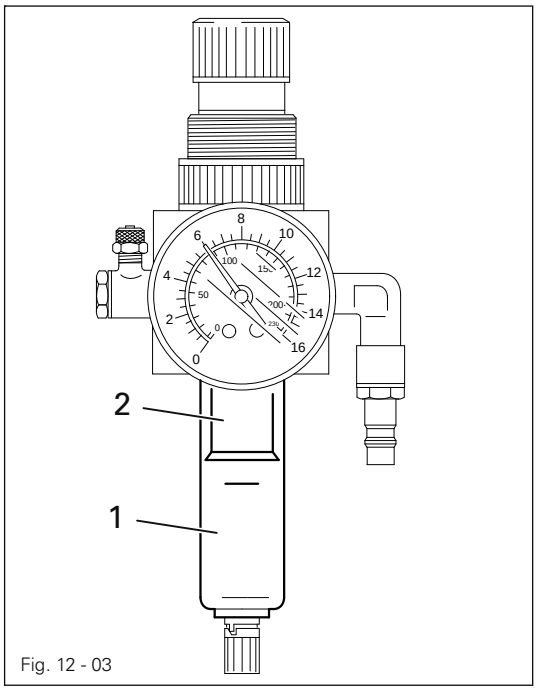

Fig. 12 - 03



Switch off the machine!
Push down the sliding seal on the maintenance unit, see Chapter **8.02 Commissioning**

To drain water bowl 1:

- Water bowl **1** drains itself automatically whe the compressed-air hose is disconnected from the air-filter/lubricator.

Cleaning filter 2:

- Unscrew water bowl **1.**
- Take out filter **2.**
- Clean filter **2** with compressed air or isopropyl alcohol (part No. **95-665 735-91).**
- Screw in filter **2** and screw on water bowl **1.**

12.06 Checking/adjusting the air pressure

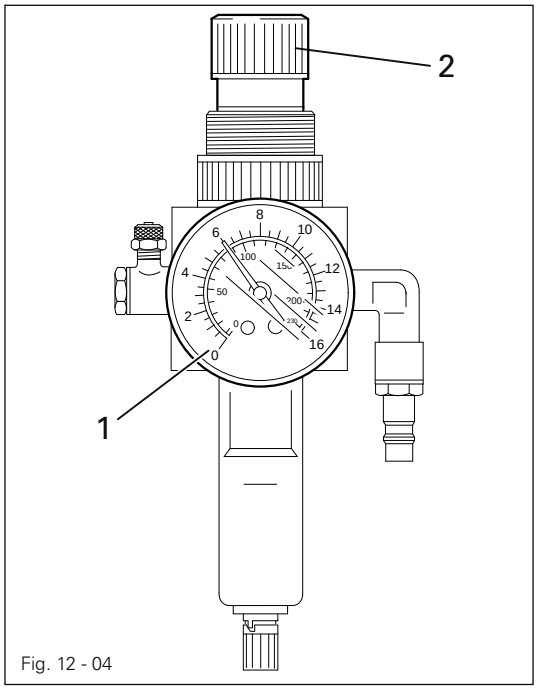

Fig. 12 - 04

- Before operating the machine, always check the air pressure on gauge**1.**
- Gauge **1** must show a pressure of **6** bar.
- If necessary adjust to this reading.
- To do so, pull knob **2** upwards and turn it so that the gauge shows a pressure of **6** bar.

12.07 Checking the oil level

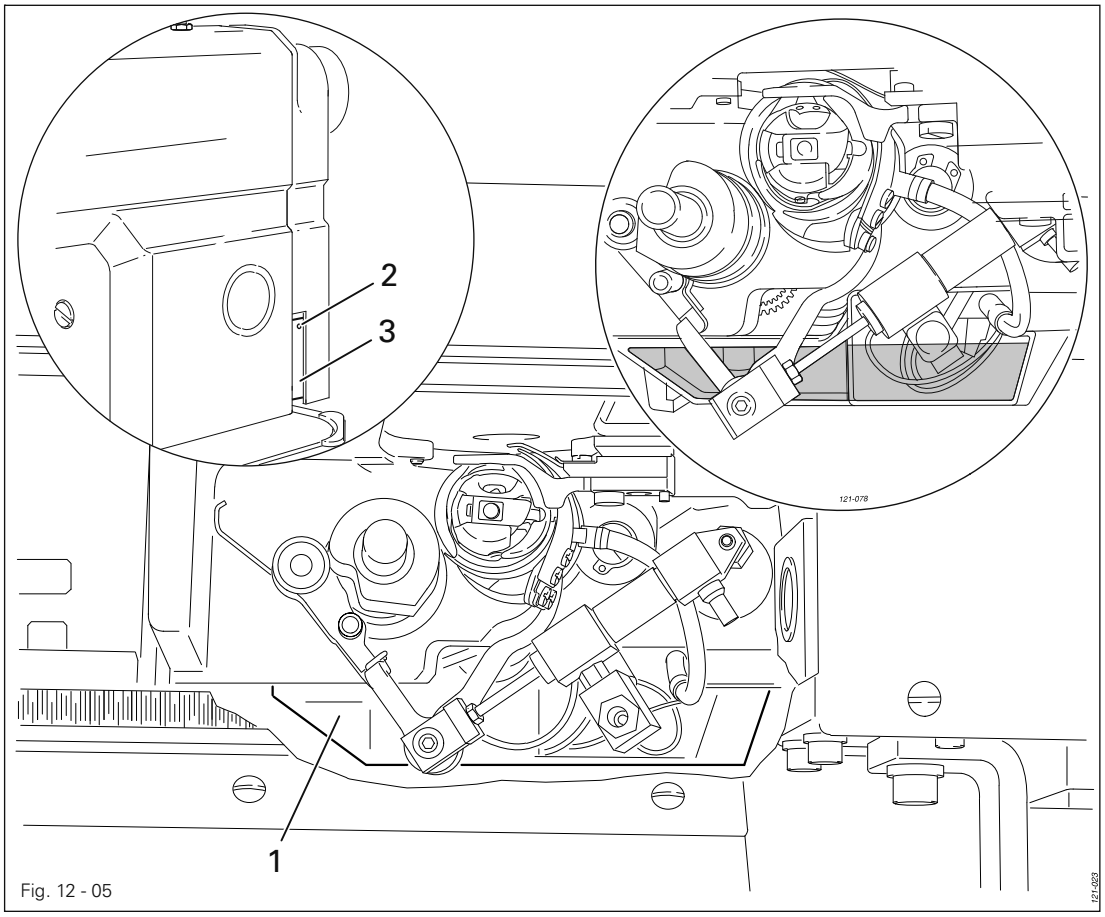

Fig. 12 - 05

Switch off the machine!
Danger of injury if the machine suddenly starts running!

The oil reservoir must always have oil in it.
Danger of damage to the machine!

- Check the oil level daily. When required, fill in oil through hole **2** to a maximum level of up to the oil line.

The oil tank **3** is not used as an oil level indicator, but only for filling tank **1.**

Only use oil with a mean viscosity of **22.0 mm²/s** at **40°C** and a density of **0.865 g/cm³** at 15°C.

We recommend PFAFF sewing machine oil, part no. **280-1-120 144.**

12.08 Lubricating the cutting device

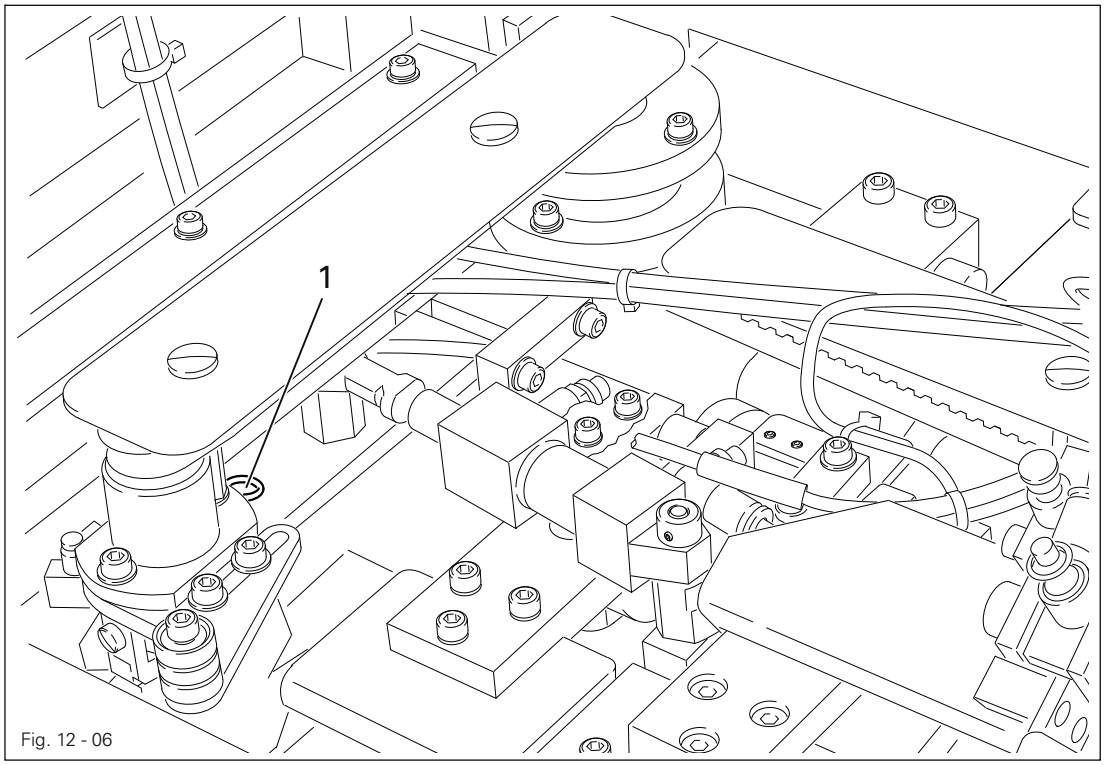

Fig. 12 - 06

Switch off the machine!
Danger of injury if the machine suddenly starts running!

- Before each start up, apply a few drops of silicone oil to the cutting device through hole **1.**

Only use oil with a density of **0.810 g/cm³** at **21°C.**

We recommend PFAFF sewing machine oil, part no. **280-1-120 217.**

12.09 Lubricating the stacker drive

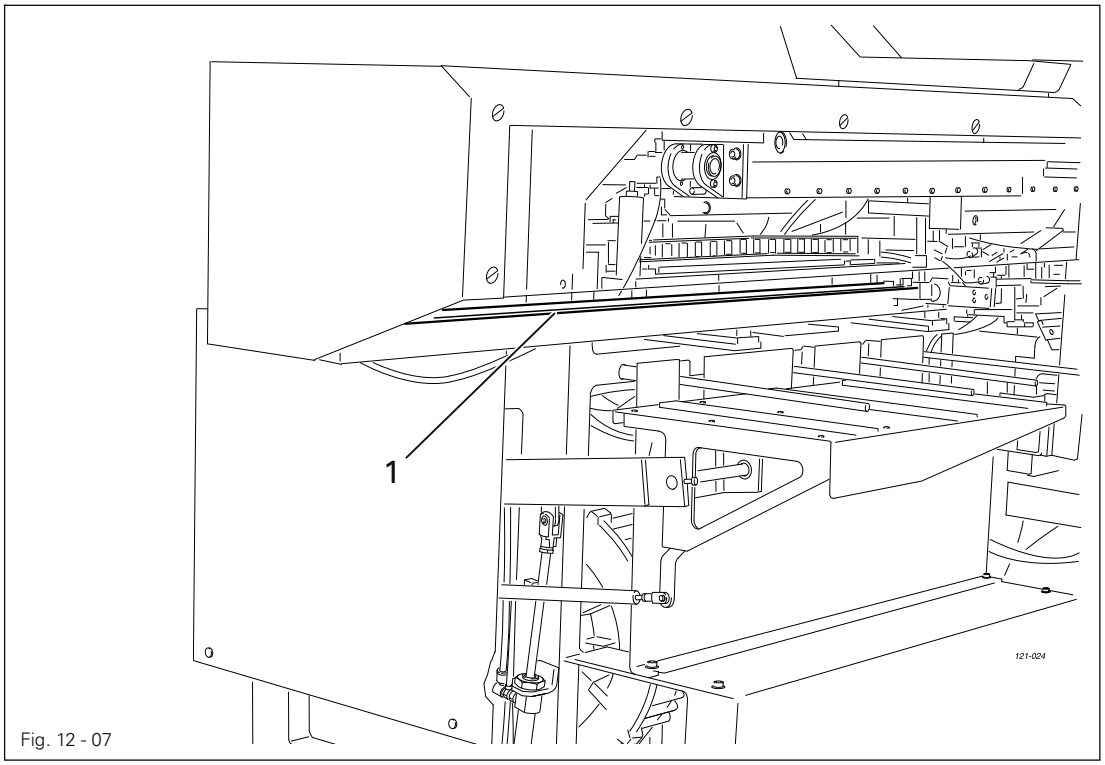

Fig. 12 - 07

Switch off the machine!
Danger of injury if the machine suddenly starts running!

- Clean bar **1** every **6** months and then grease it.

Only use Isoflex Topas **L32** heavy-duty grease, part no. **280-1 120 210.**

13 Adjustment



On the PFAFF 3519-4/01 do not use a screw clamp on the needle bar!
The special coating of the needle bar could be damaged.

13.01 Notes on adjustment

All following adjustments are based on a fully assembled machine and may only be carried out by expert staff trained for this purpose. Machine covers, which have to be removed and replaced to carry out checks and adjustments, are not mentioned in the text. The order of the following chapters corresponds to the most logical work sequence for machines which have to be completely adjusted. If only specific individual work steps are carried out, both the preceding and following chapters must be observed. Screws, nuts indicated in brackets ( ) are fastenings for machine parts, which must be loosened before adjustment and tightened again afterwards.



Unless stated otherwise, during all adjustment work the machine must be disconnected from the electric and pneumatic power supply!
Danger of injury if the machine is started accidentally!

13.02 Tools, gauges and other accessories

- Screwdrivers with blade width from 2 to 10 mm
- Wrenches (spanners) with jaw width from 7 to 14 mm
- Allan keys from 1.5 to 6 mm
- Fork wrench with 22 mm jaw width
- Metal rule, Part No. 08-880 218-00
- Adjustment gauge, Part No. 61-111 642-19
- Sewing thread and test material
- 1 adjustment gauge for tightening the hook drive belt, Part-No. 61-111 639-76
- 1 adjustment gauge for the needles of the loading table (Part No. 95-743 776-15)

13.03 Abbreviations

TDC = top dead center
BDC = bottom dead center

13.04 Servicing position of the sewing head

For maintenance and adjusting work the sewing head can be lifted out of the machine stand.

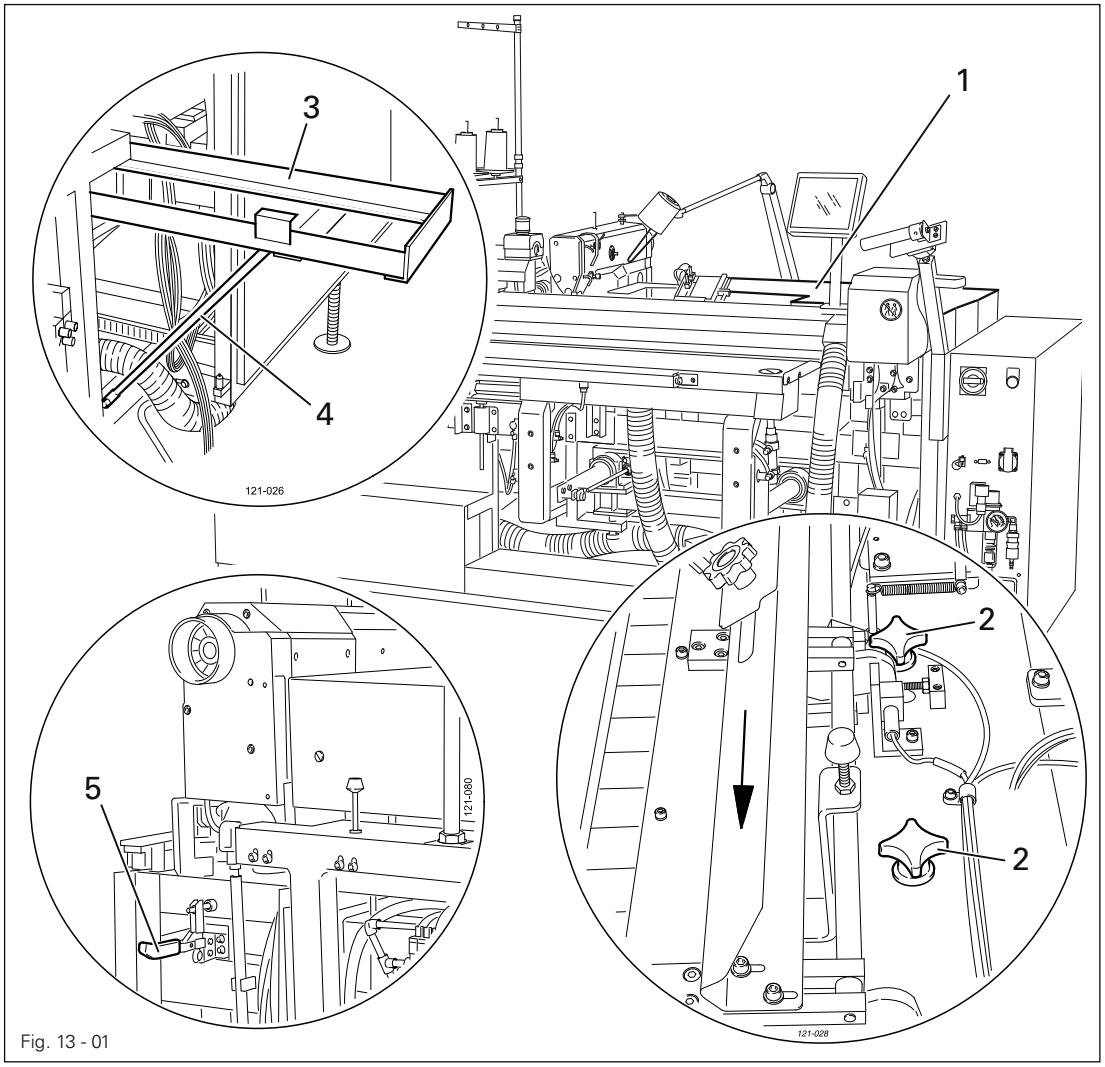

Fig. 13 - 01

Switch off the machine!
Danger of injury if the machine suddenly starts running!

Bring the sewing head into the servicing position

- Open cover **1** and the clamping lever on the loading clamp.
- Loosen screws **2** and slide the loading clamp to the stop limit in the direction of the arrow.
- Swing up frame **3** and secure support **4.**
- Open clamping lever **5.**
- Pull back the sewing head to the stop limit and tilt it back if necessary.

Use both hands to tilt back the sewing head!

Bringing the sewing head into the working position



Use both hands to bring the sewing head into an upright position!
Danger of hands being crushed between sewing head and machine stand!

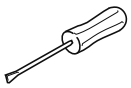

- Bring the sewing head into an upright position and slide it up to the limit stop into the machine stand.
- Close clamping lever **5.**
- Unhinge support **4** and swing down frame **3.**
- Push back the loading clamp to the limit stop.
- Close the clamping lever on the loading clamp.
- Tighten screws **2** and close cover **1.**

13.05 Adjusting the sewing head

13.05.01 Adjustment aids

With the help of adjustment gauge **1** (part no. **95-752 474-05)** the needle bar can be fixed in the needle rise position (needle bar position **1.8 mm** below b.d.c.)

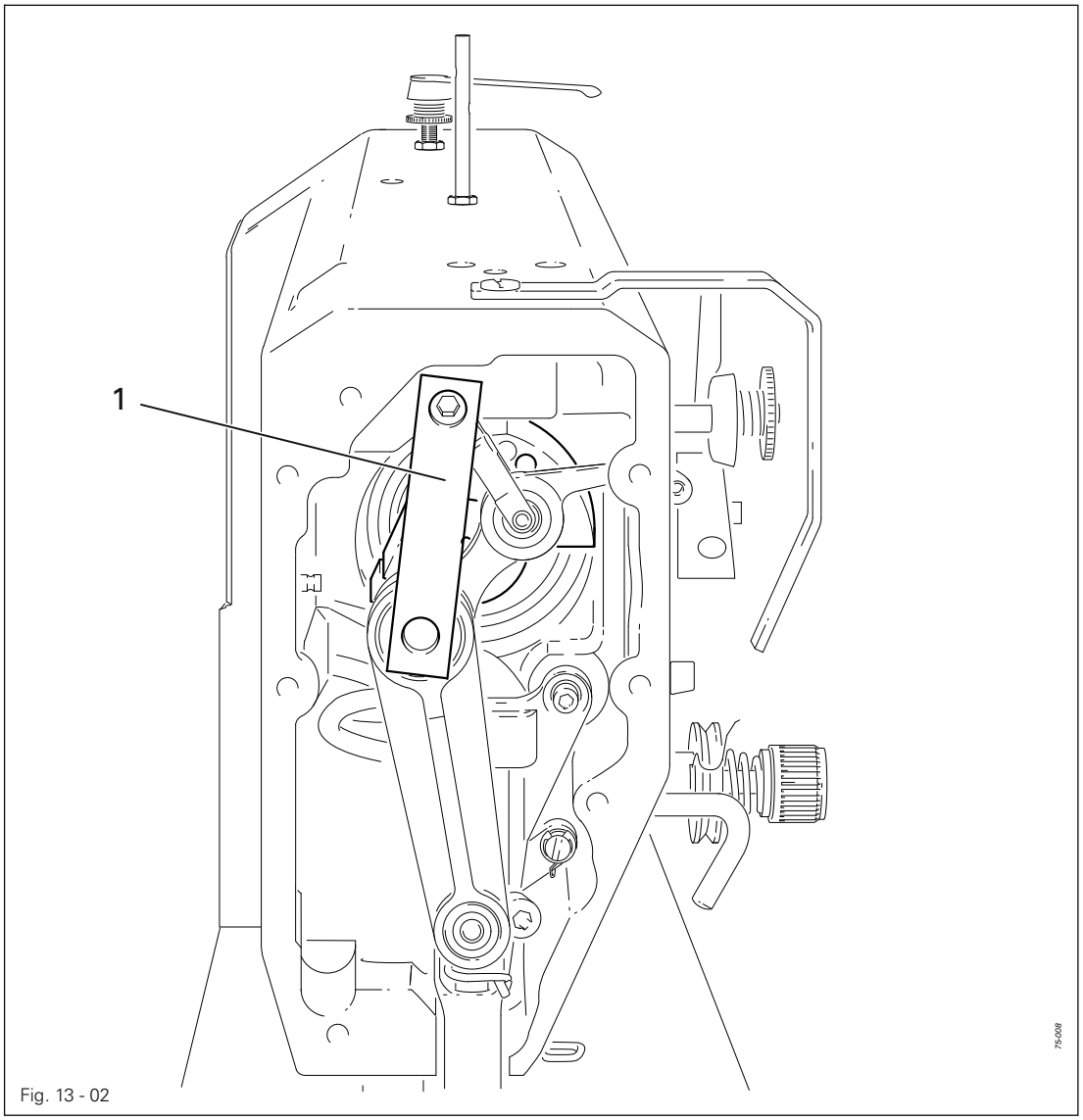

Fig. 13 - 02

- Turn the balance wheel until the needle bar is approximately in the required position.
- Fit adjustment gauge **1** as shown in Fig. **13-02.** If necessary, turn the balance wheel a fraction backwards and forwards, until the adjustment gauge fits properly.

13.05.02 Basic position of the machine drive

This setting is only necessary if toothed belt **2** was detached

Requirement
When the needle bar is positioned **1.8 mm** past b.d.c., the markings **3** and **4** should be in alignment..

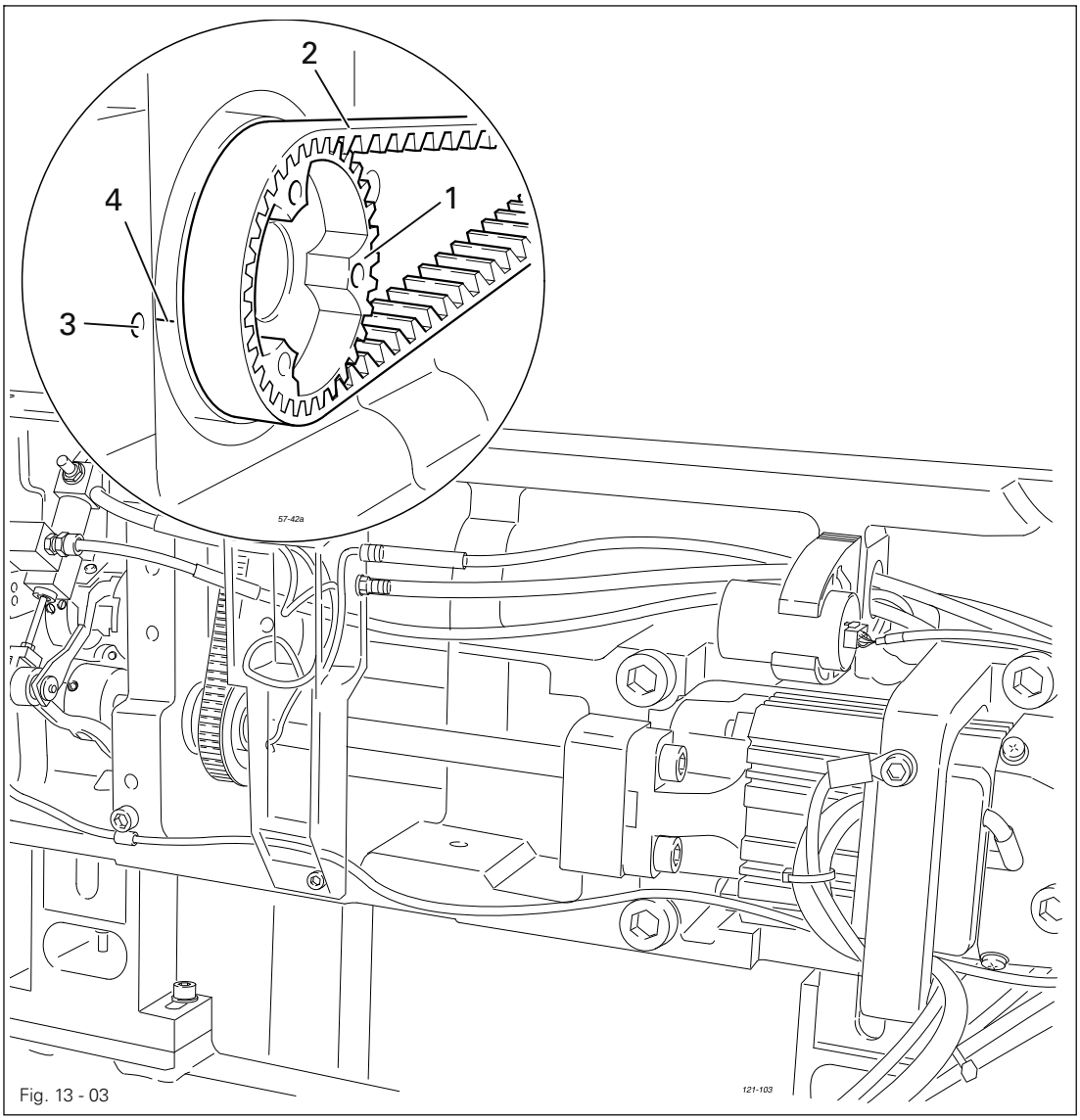

Fig. 13 - 03

- Set needle bar at **1.8 mm** past b.d.c. (see Chapter **13.05.01 Adjustment aids**).
- Turn toothed belt sprocket **1** according to Requirement and push on toothed belt **2.**

When installing the motor pay attention to the correct position of shaft flange, shock absorber and motor flange!

13.05.03 Needle in needle hole centre

Requirement
The needle should enter exactly in the centre of the needle hole.

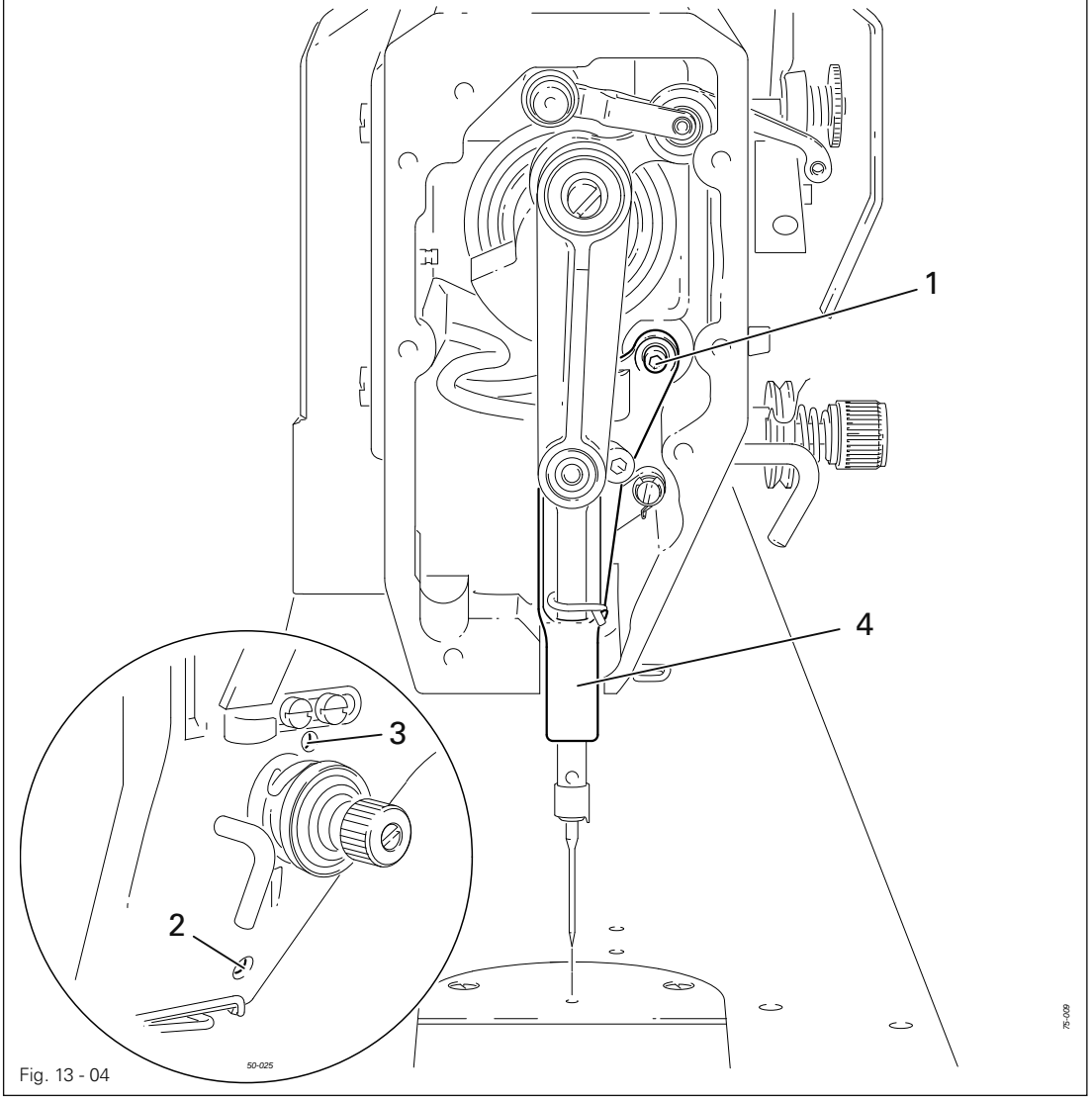

Fig. 13 - 04

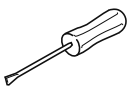

- Position the needle directly above the needle hole.
- Loosen screws **1, 2** and **3.**
- Adjust needle bar frame **4** according to the **requirement**.
- Tighten screw **2** and slightly tighten screw **3.**
- With screw **1** draw the inner guide stud towards the eye of the needle bar frame **4** and tighten it.
- Turn the balance wheel a few times, so that the needle bar frame **4** is not under tension.
- Tighten screw **3.**

13.05.04 Hook shaft bearing and toothed belt tension

Requirement

1. The front edge of the hook shaft **6** must be at a distance of **14.5 mm** to the needle center. At the same time, the slot in the hook shaft bearing **1** (see arrow) must be parallel to the bedplate and pointing opposite to the direction of sewing.
2. The toothed belt should be tightened in such a way that, when the gauge is pushed onto the toothed belt, the marking in the gauge window corresponds to the marking on the bushing.

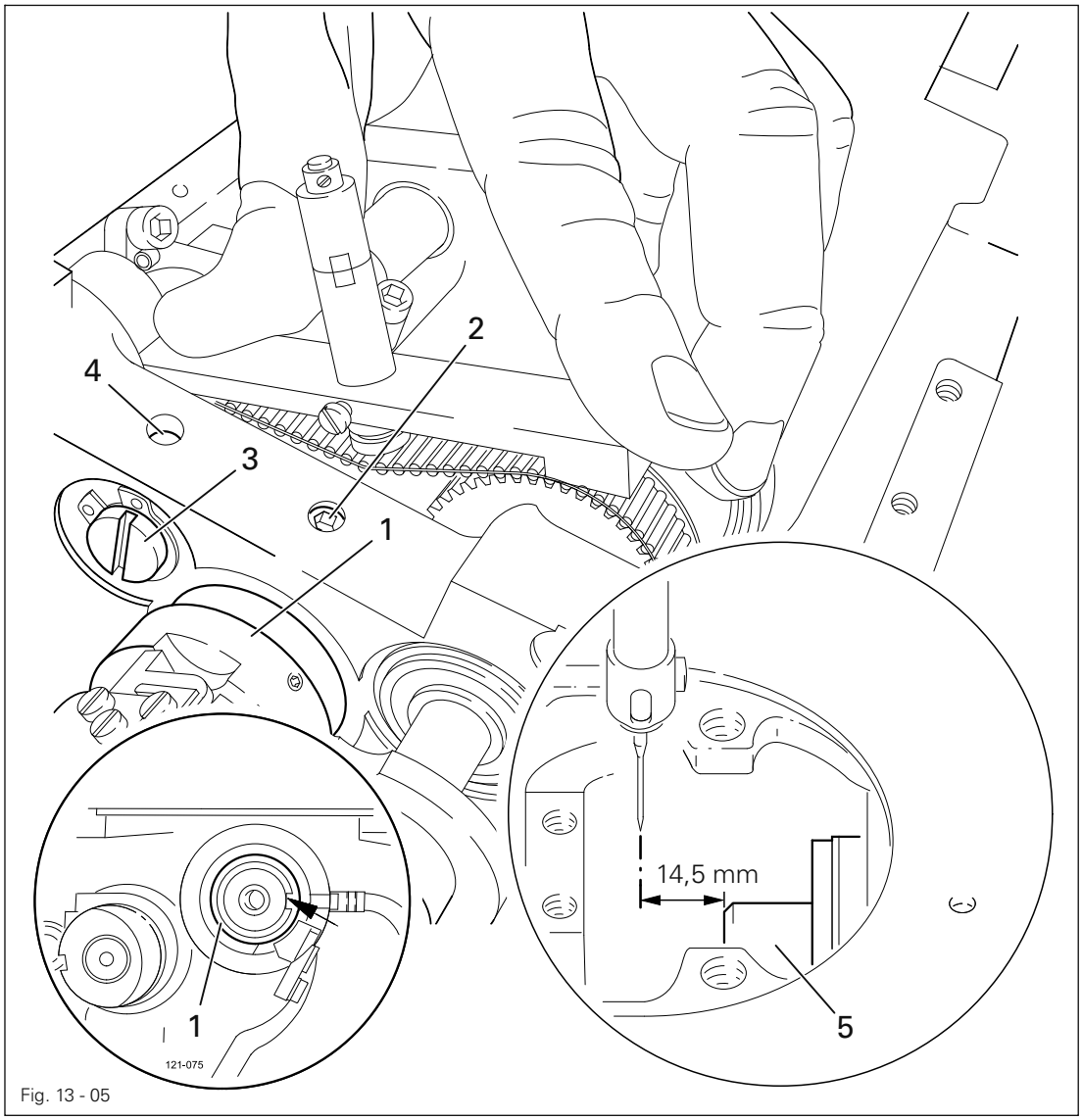

Fig. 13 - 05

- Align hook shaft bearing **1** (screw **2**) according to **requirement 1.**
- Push the gauge (Part-No. **61-111 639-76**) onto the toothed belt so that it is centred to the toothed belt and touching the bearing of the sliding shaft. The gauge window must be facing the hook.
- Eccentric **3** (screw **4**) clockwise in accordance with **requirement 2,** taking care that the axial position of eccentric **3** is not altered.

13.05.05 Hook lubrication

Requirement

1. The centrifugal disk **1** must be positioned **1.5** mm in front of the oil ring **3.**
2. When the machine is running at full speed, after approx. **10 seconds** a mark should be made by a fine stripe of oil on the strip of paper placed over the needle plate cutout.

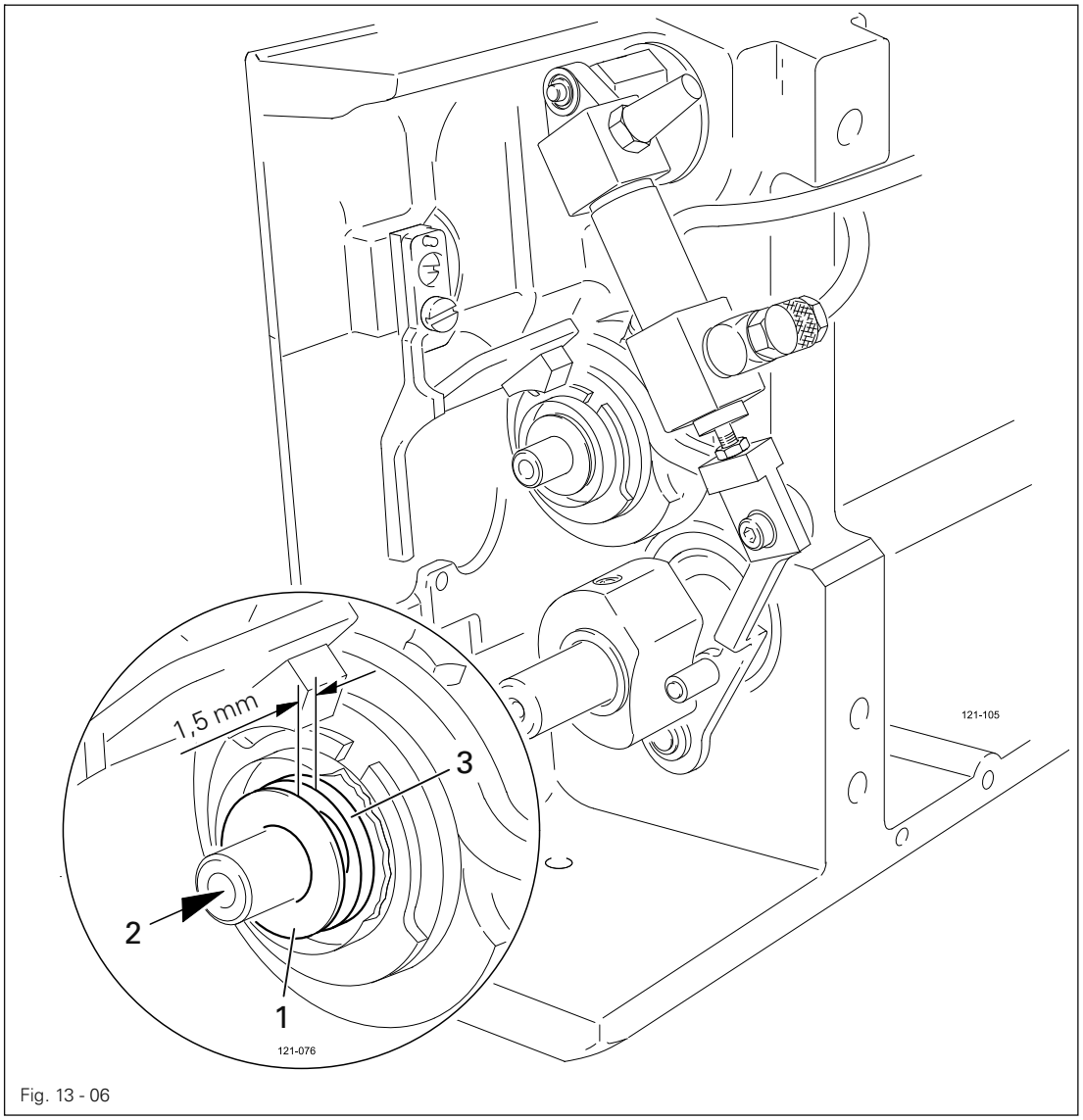

Fig. 13 - 06

The adjustment is only necessary if the wick has been replaced.
When replacing the wick, make sure that the new wick is impregnated with oil.

- Move the centrifugal disk **1** (screw **2**) according to requirement **1.**
- Check requirement **2.** If necessary, move centrifugal disk **1.**

13.05.06 Needle rise, hook-to-needle clearance, needle height and bobbin case position finger

Requirement

With the needle at **1.8 mm** after BDC,

1. the hook point **6** must point to the middle of the needle and be at a distance of **0.05 mm - 0.1 mm** to the clearance cut of the needle, and
2. the top edge of the needle eye must be **0.8 mm** below the hook point.
3. Between the projection of the bobbin case position finger **4** and the bottom of the retaining groove there should be a distance of **0.5 mm**.

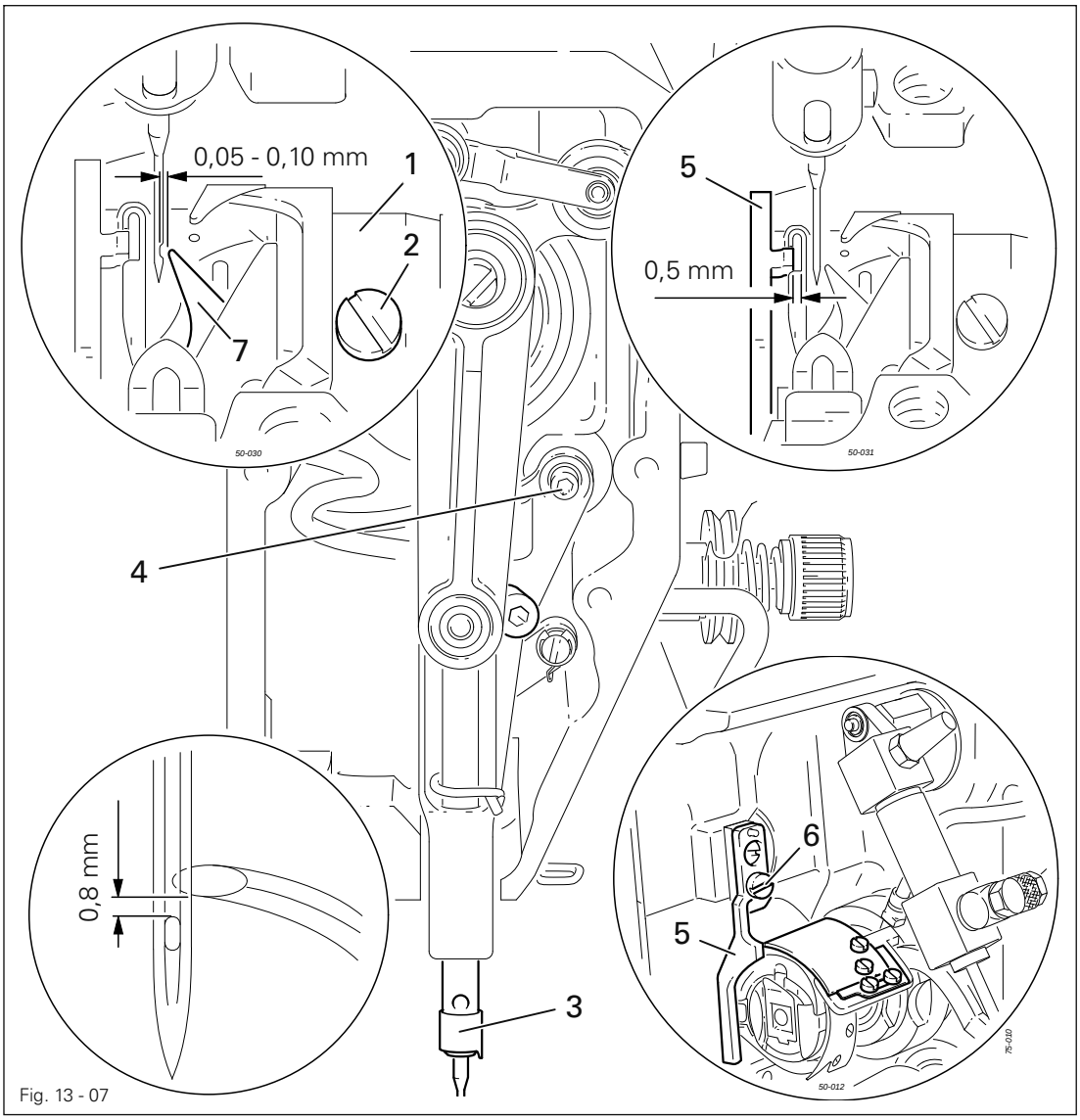

Fig. 13 - 07

- Set needle bar at **1.8 mm** past b.d.c. (see Chapter **13.05.01 Adjustment aids**).
- Adjust hook **1** (screws **2)** in accordance with **requirement 1.**
- Tighten screw **1.**
- Move needle bar **2** (screw **3)** without turning it according to **requirement 2.**
- Align bobbin case position finger **4** (screw **5)** according to **requirement 3..**

13.05.07 Thread check spring and slack thread regulator

Requirement

1. The motion of the thread check spring must be completed when the needle point enters the material (spring stroke approx. **7 mm**).
2. When the thread loop is at its largest when going around the hook, the thread check spring must have moved by approx. **1 mm**.

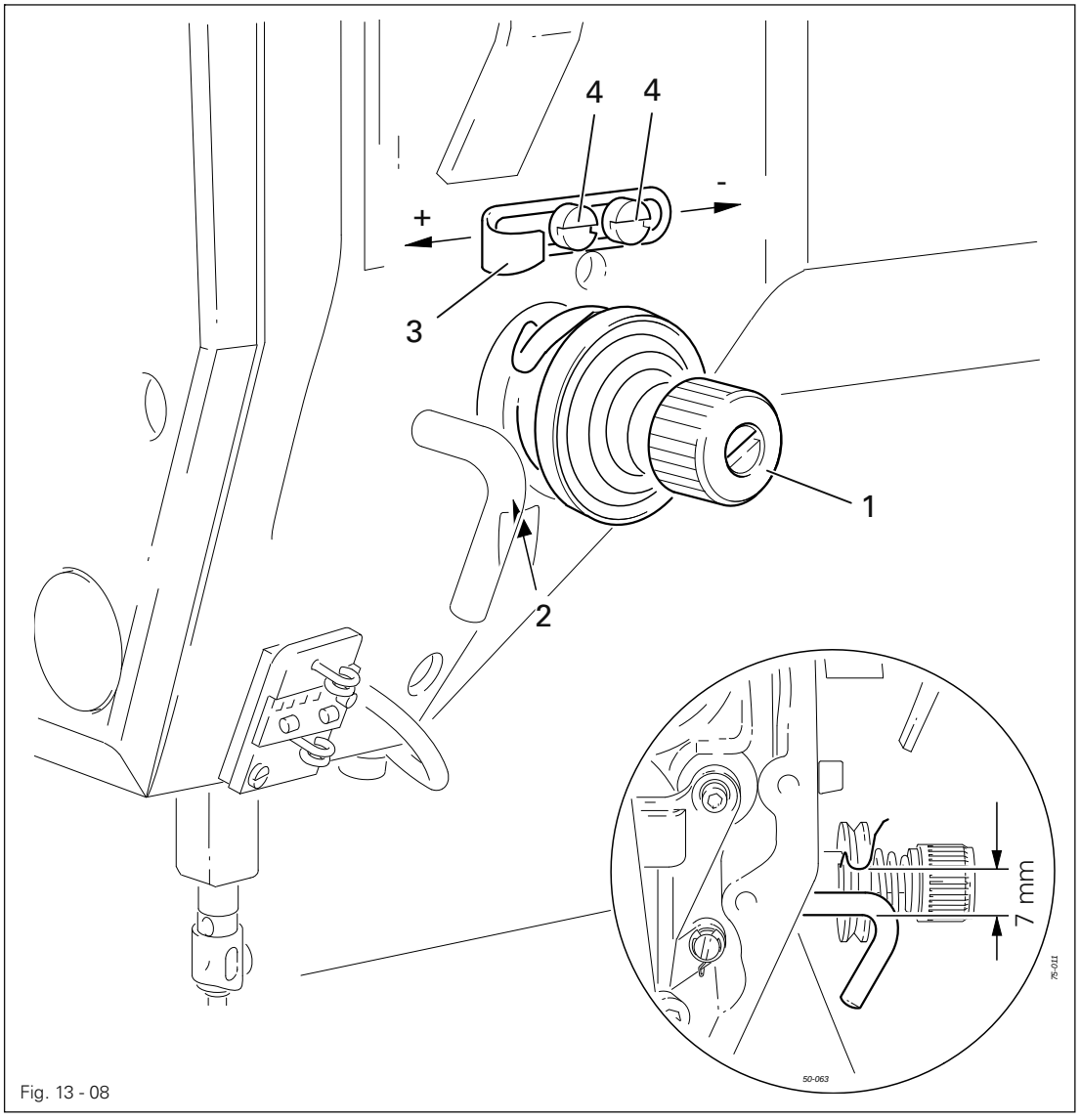

Fig. 13 - 08

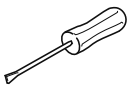

- Turn thread tension **1** (screw **2**) according to **requirement 1.**
- Turn thread tension **3** (screw **4**) according to **requirement 2.**

Due to technical sewing reasons it may be necessary to deviate from the spring stroke indicated above.
Move the slack thread regulator **3** (screw **4**) toward the "**+**" (= more thread) or toward the "**-**" (= less thread)

13.05.08 Bobbin winder

Requirement

1. With the bobbin winder on, the drive wheel **1** must engage reliably.
2. With the bobbin winder off, the friction wheel **5** must not be driven by the drive wheel **1.**
3. The bobbin winder must turn off automatically when the thread level is approx. **1 mm** from the edge of the bobbin.

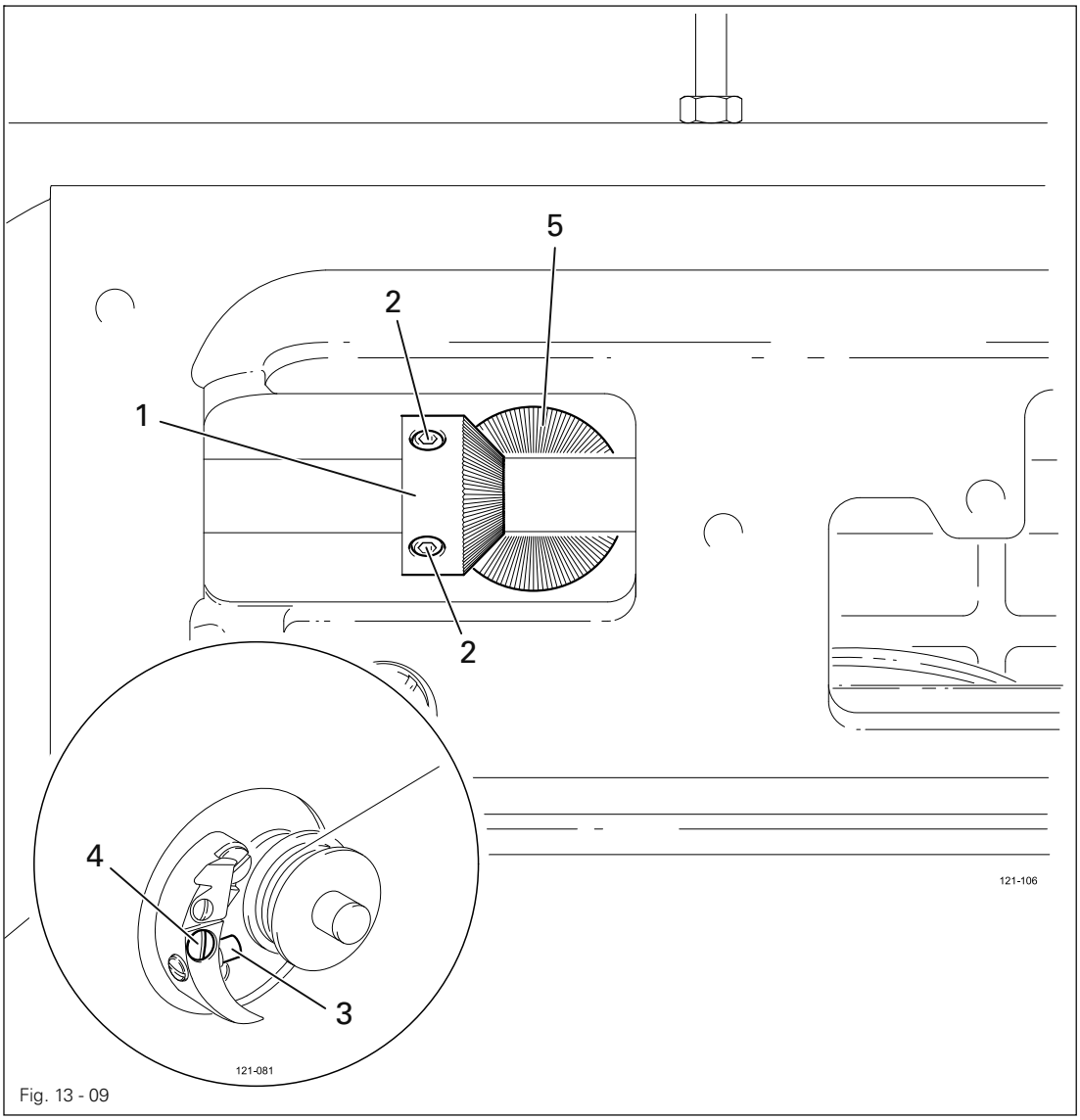

Fig. 13 - 09

- Move drive wheel **1** (screws **2)** in accordance with **requirement 1** and **2.**
- Move bolt **3** (screw **4)** in accordance with **requirement 3.**

13.06 Adjusting the thread trimming device

13.06.01 Preliminary adjustment of the control cam

Requirement
When the needle bar is at its t.d.c., the surface **1** of the control cam should be parallel to the bed-plate.

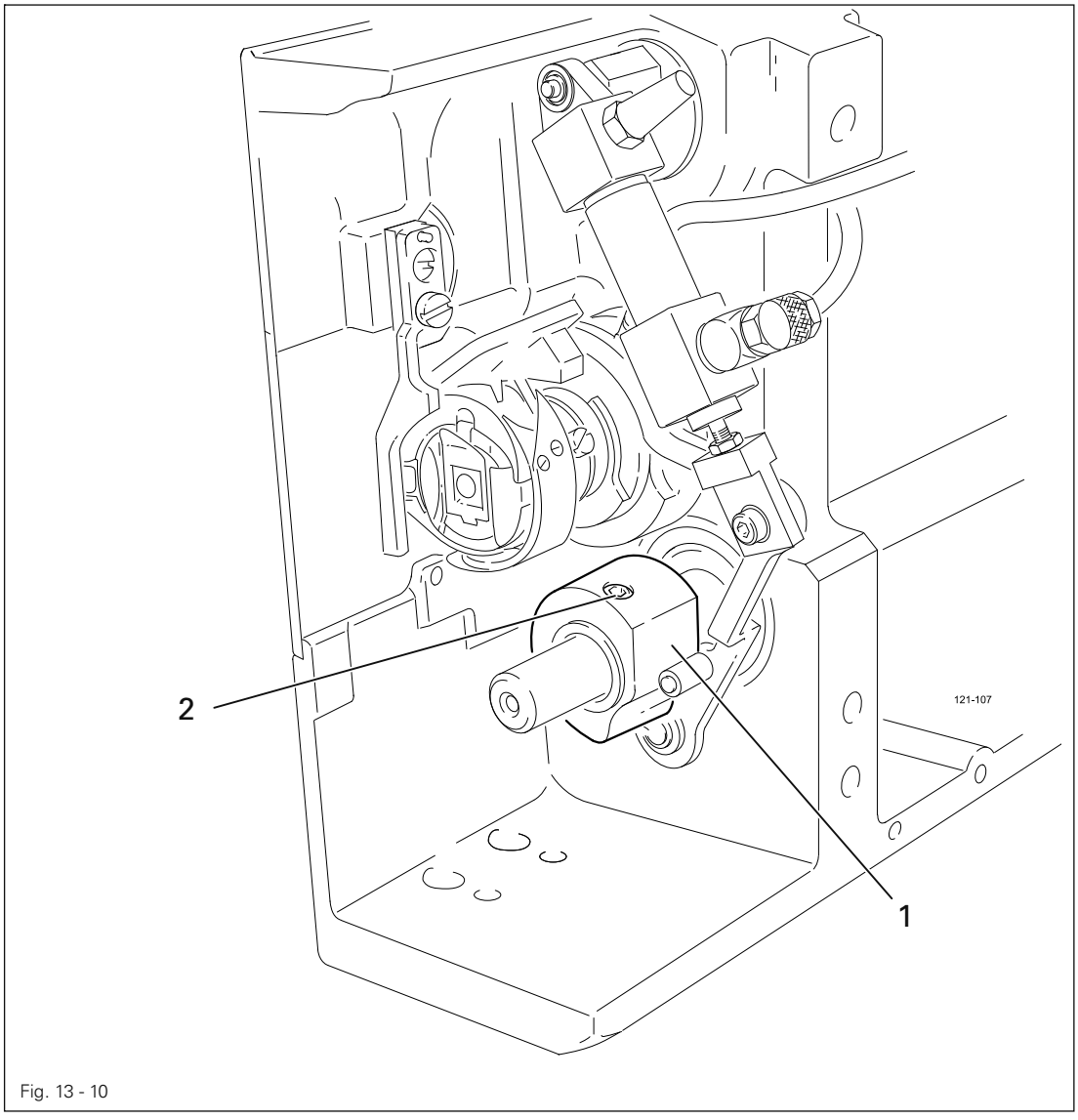

Fig. 13 - 10

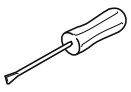

- Adjust control cam **1** (screws **2**) in accordance with the **requirement**.

13.06.02 Adjusting the roller lever

Requirement

1. When cylinder **3** is fully extended, the roller of roller lever **4** should be **0.1 mm** away from the highest point of control cam **5.**
2. Cylinder **3** should be parallel to the front edge of the bed-plate.

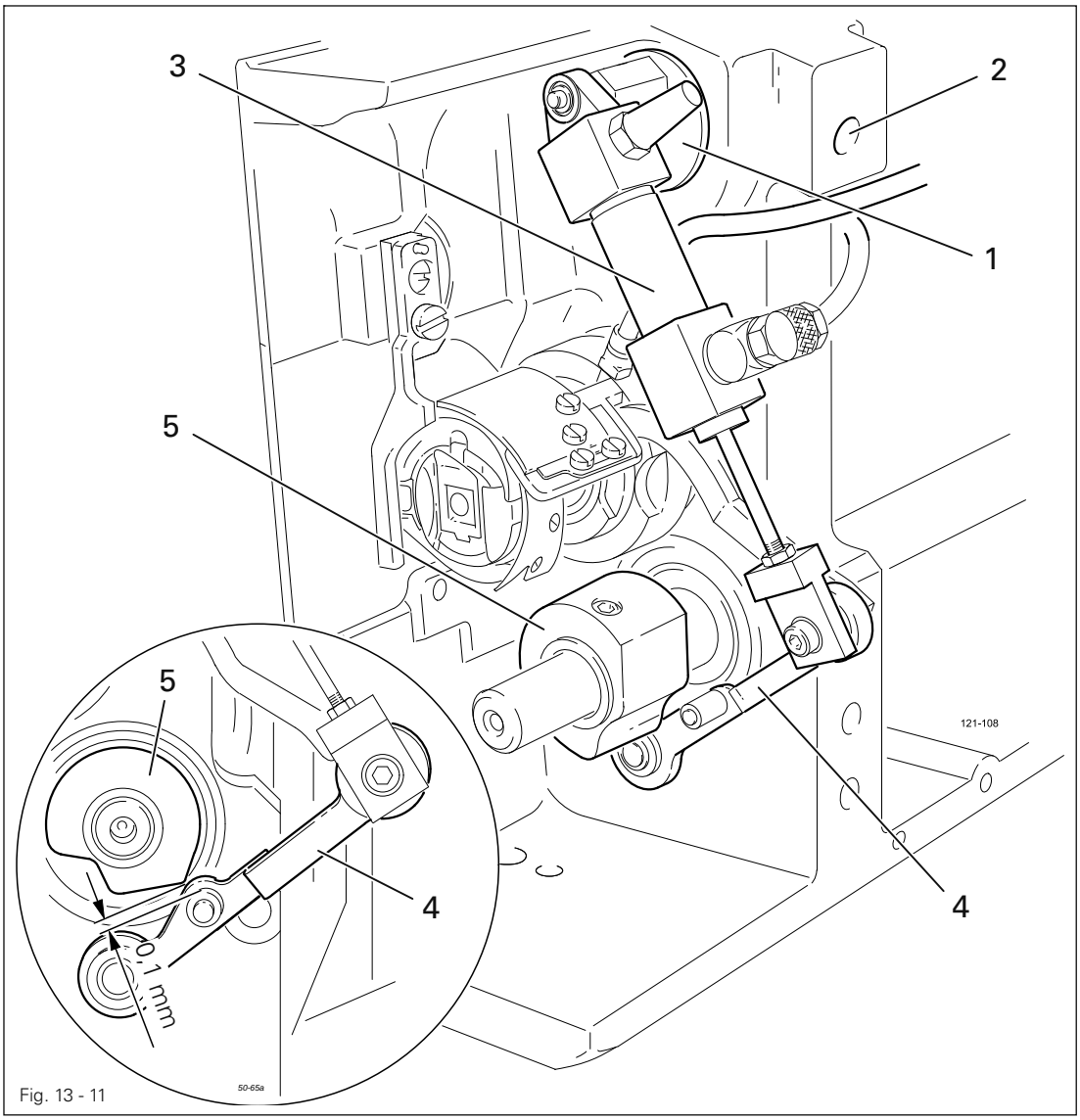

Fig. 13 - 11

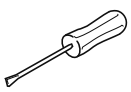

- Adjust or turn eccentric **1** (screw **2)** in accordance with the **requirements**.

13.06.03 Lateral adjustment of the thread catcher

Requirement

1. The tip of thread catcher **5** should point exactly towards the centre of the needle.
2. The thread catcher **5** should be horizontal and not touch anything when it moves.

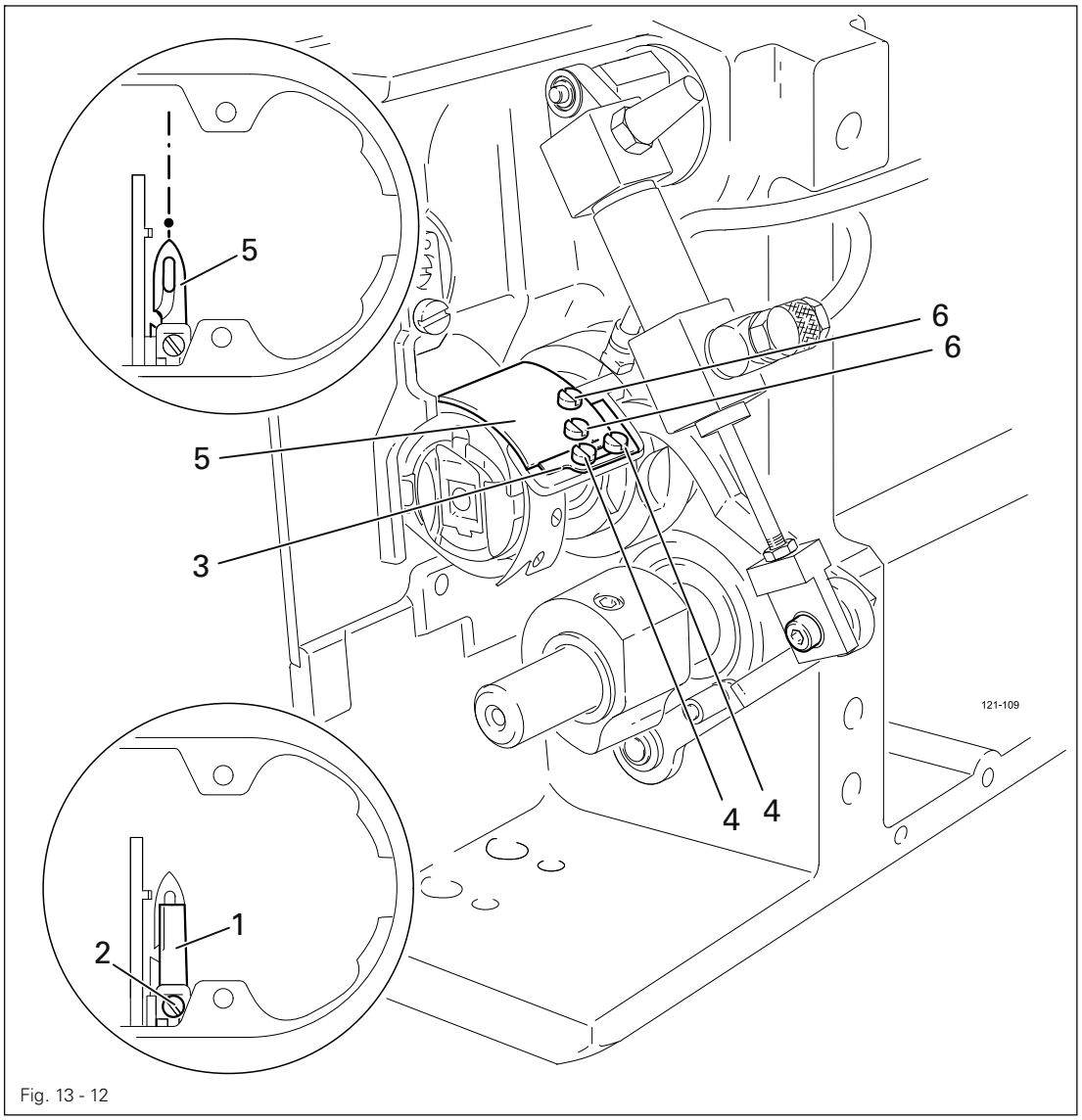

Fig. 13 - 12

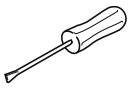

- Remove knife **1** (screw **2**).
- Bring the needle bar to its b.d.c.
- Release stop **3** (screws **4**).
- Position thread catcher **5** (screws **6**) in front of the needle by hand, and align in accordance with the **requirements**.



For further adjustments knife **1** remains detached and stop **3** released.

13.06.04 Knife position

Requirement

1. There must be a distance of **4 mm** between the cutting edge of the knife and the needle.
2. The right edge of the knife **1** must not extend beyond the right edge of the thread catcher (see arrow).

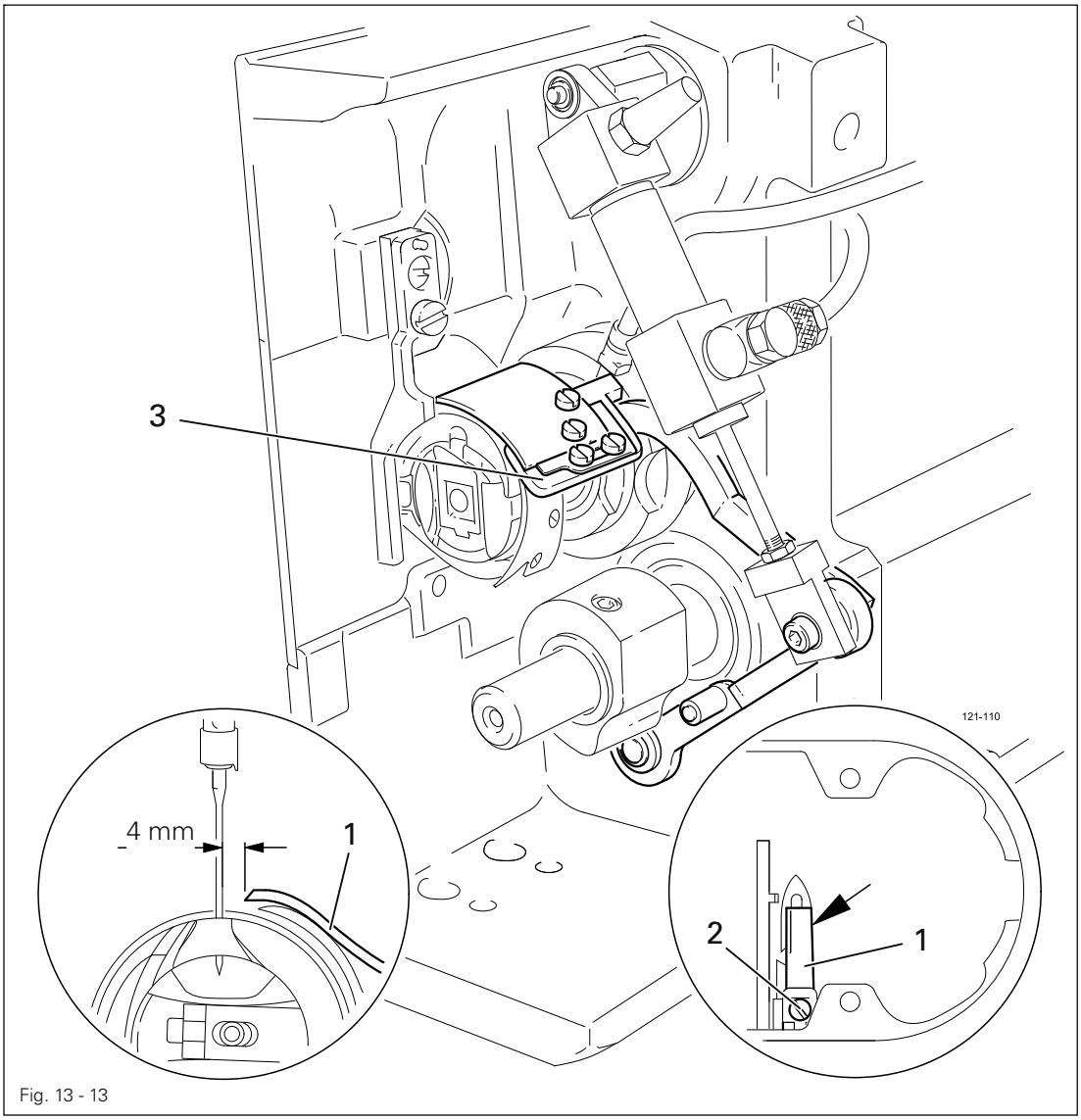

Fig. 13 - 13

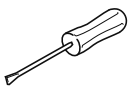

- Bring the needle bar to BDC.
- Slide knife **1** under the locking tab and align according to **requirement 1.**
- Tighten screw **2** lightly.
- Adjust thread catcher carrier **3** by hand until the wedge point in the thread catcher is positioned just in front of the cutting edge of the knife.
- Align knife **1** according to **requirement 2** and tighten screw **2.**

13.06.05 Front point of reversal of the thread catcher

Requirement
When the thread catcher **5** is at its front point of reversal, the rear edge of the thread catcher cutout must be positioned **1 mm** before the bobbin case position finger **6.**

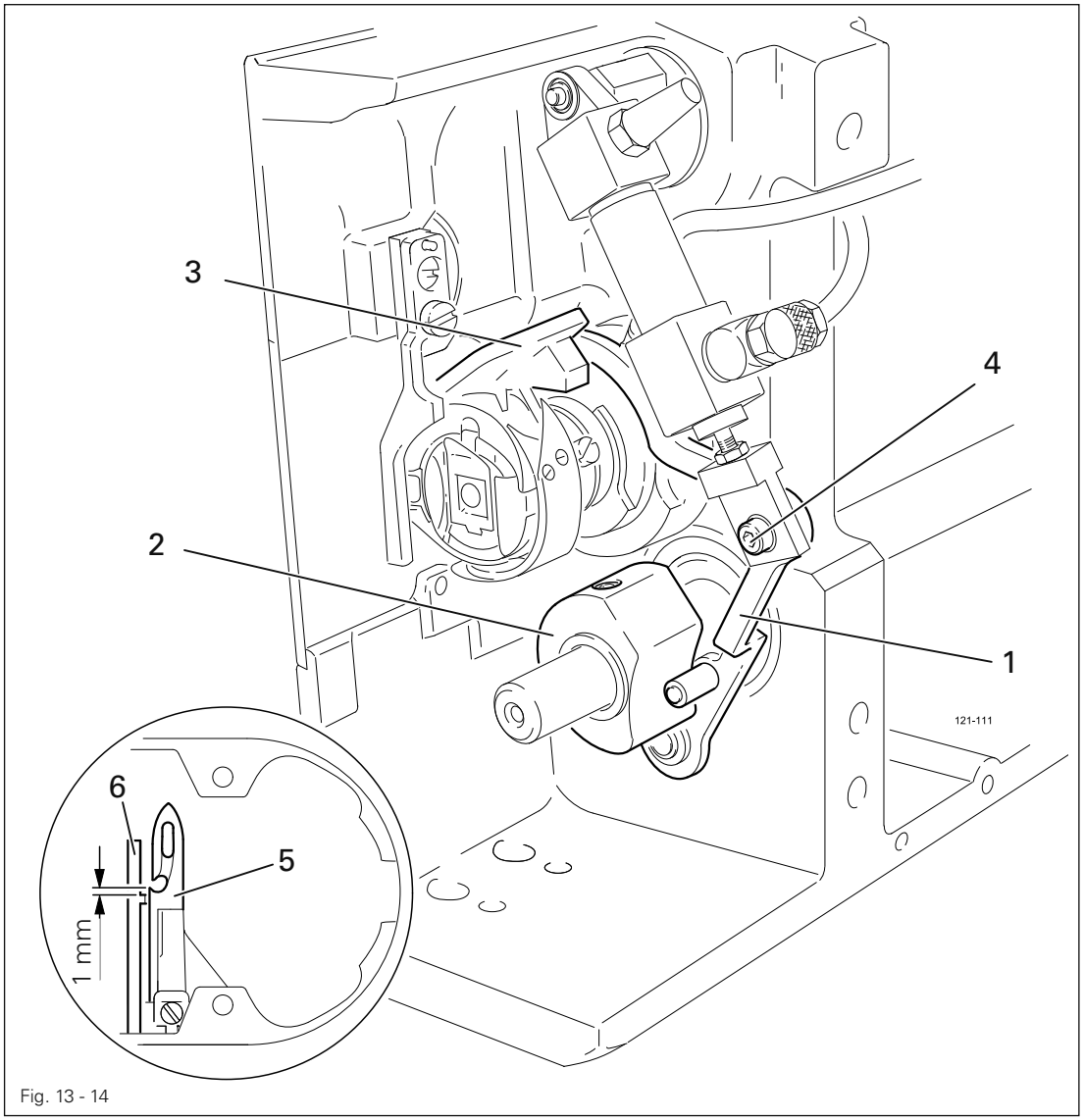

Fig. 13 - 14

- Swing roller level **1** into the lowest point of the control cam **2.**
- Move thread catcher carrier **3** (screw **4)** according to the **requirement**.

13.06.06 Manual trimming check

Requirement
Two threads must be cut perfectly both left and right in the cutout of thread catcher **1.**

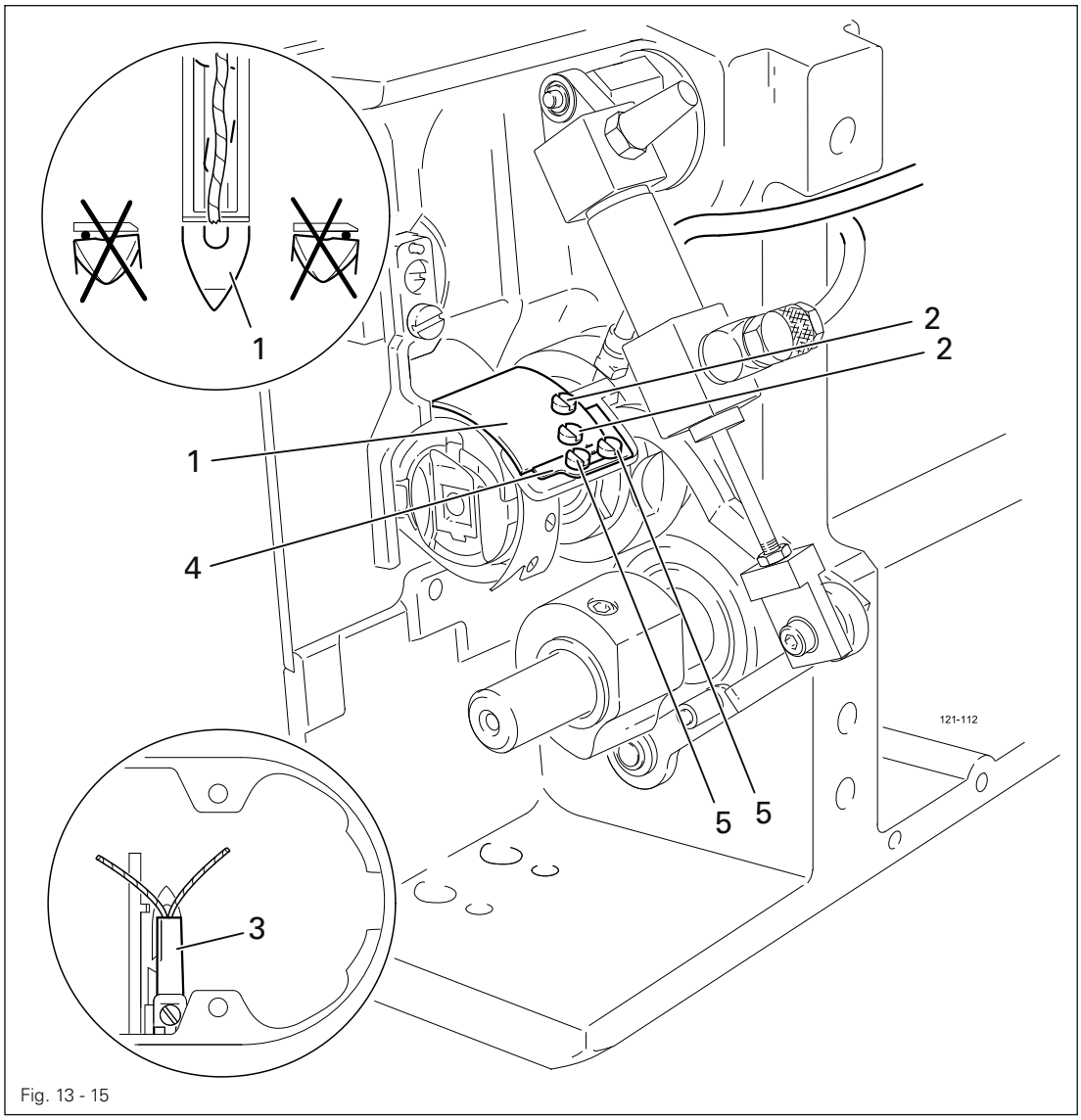

Fig. 13 - 15

- Move thread catcher **1** by hand to its front point of reversal.
- Double the thread and insert into catcher cutout.
- Carry out trimming operation manually.
- If the threads are not cut according to the **requirement**, align thread catcher **1** (screws **2**) with knife **3** accordingly.
- Move stop **4** against thread catcher **1** and tighten screws **5.**
- Check chapter **13.06.03 Lateral alignment of the thread catcher**, and readjust if necessary.

13.06.07 Readjusting the control cam

Requirement
When the end of the thread flange **3** is **2 mm** behind the centre of the catch of the bobbin case position finger **4,** there should also be a **2** mm distance between the tip of thread catcher **6** and the centre of the catch.

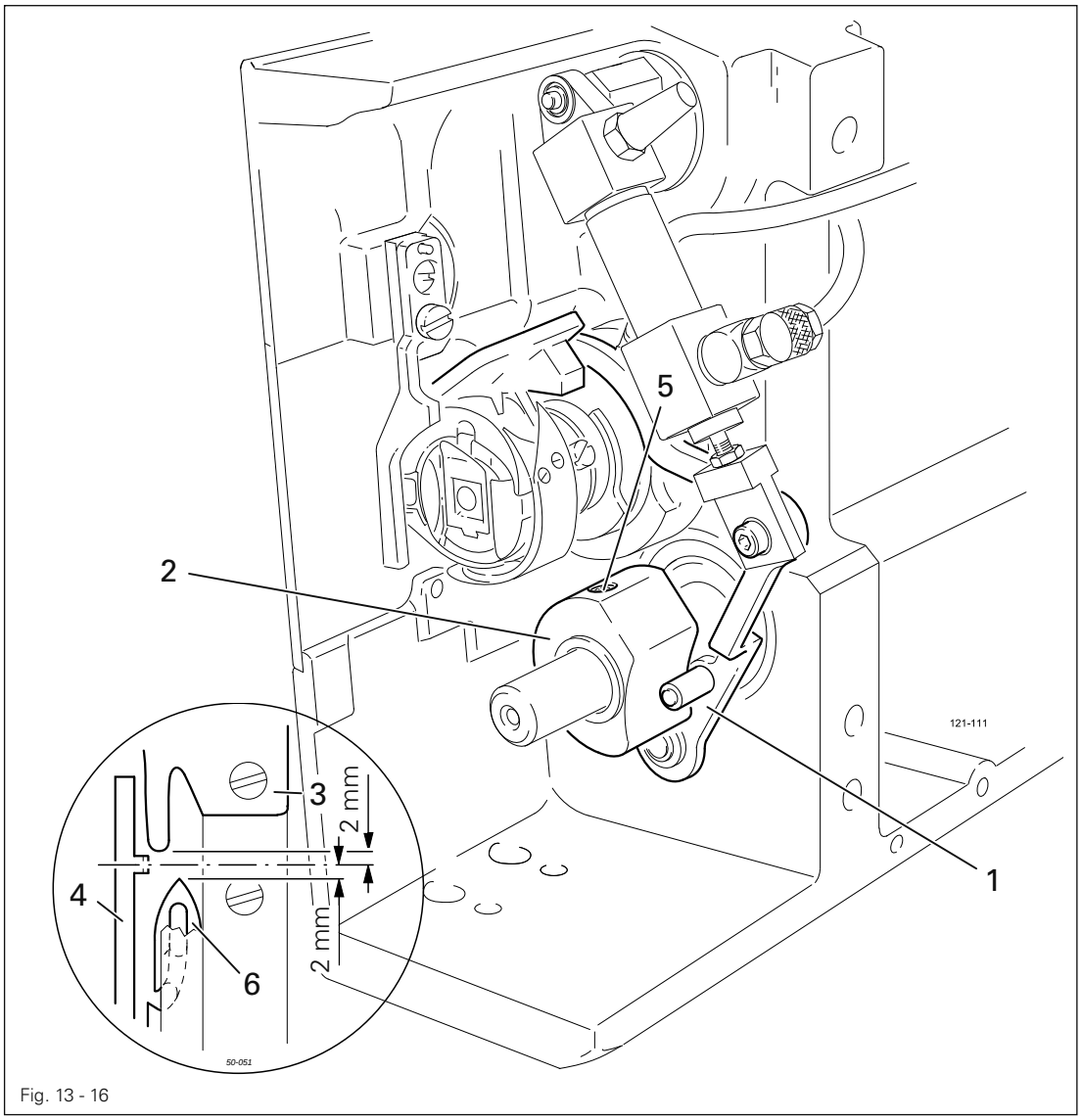

Fig. 13 - 16

- Bring the needle bar to its b.d.c.
- Press roller lever **1** by hand against the control cam **2** and turn the balance wheel until there is a distance of **2** mm between the end of the thread flange **3** and the centre of the catch of the bobbin case position finger **4.**
- If necessary, adjust control cam **2** (screws **5)** in accordance with the **requirement**.

13.07 Adjusting the loading table

13.07.01 Basic setting of the loading table height

Requirement
Loading table **3** should be in the centre between the bars **4** and **5** and be parallel to them.

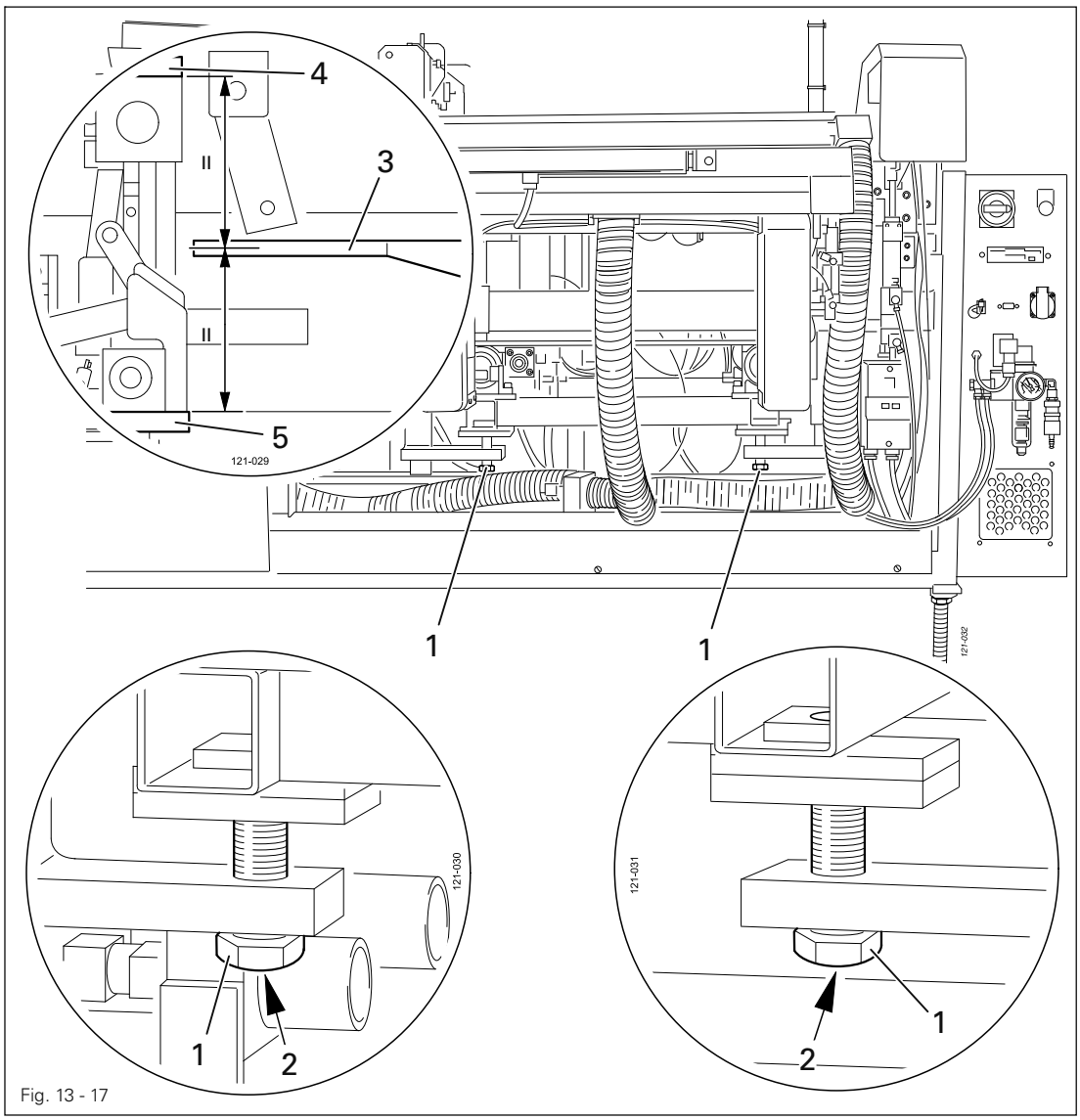

Fig. 13 - 17

- Adjust screws **1** (screws **2**) in accordance with the **requirement**.

13.07.02 Positioning the loading table

Requirement
Loading table **1** should be parallel to bar **3.**

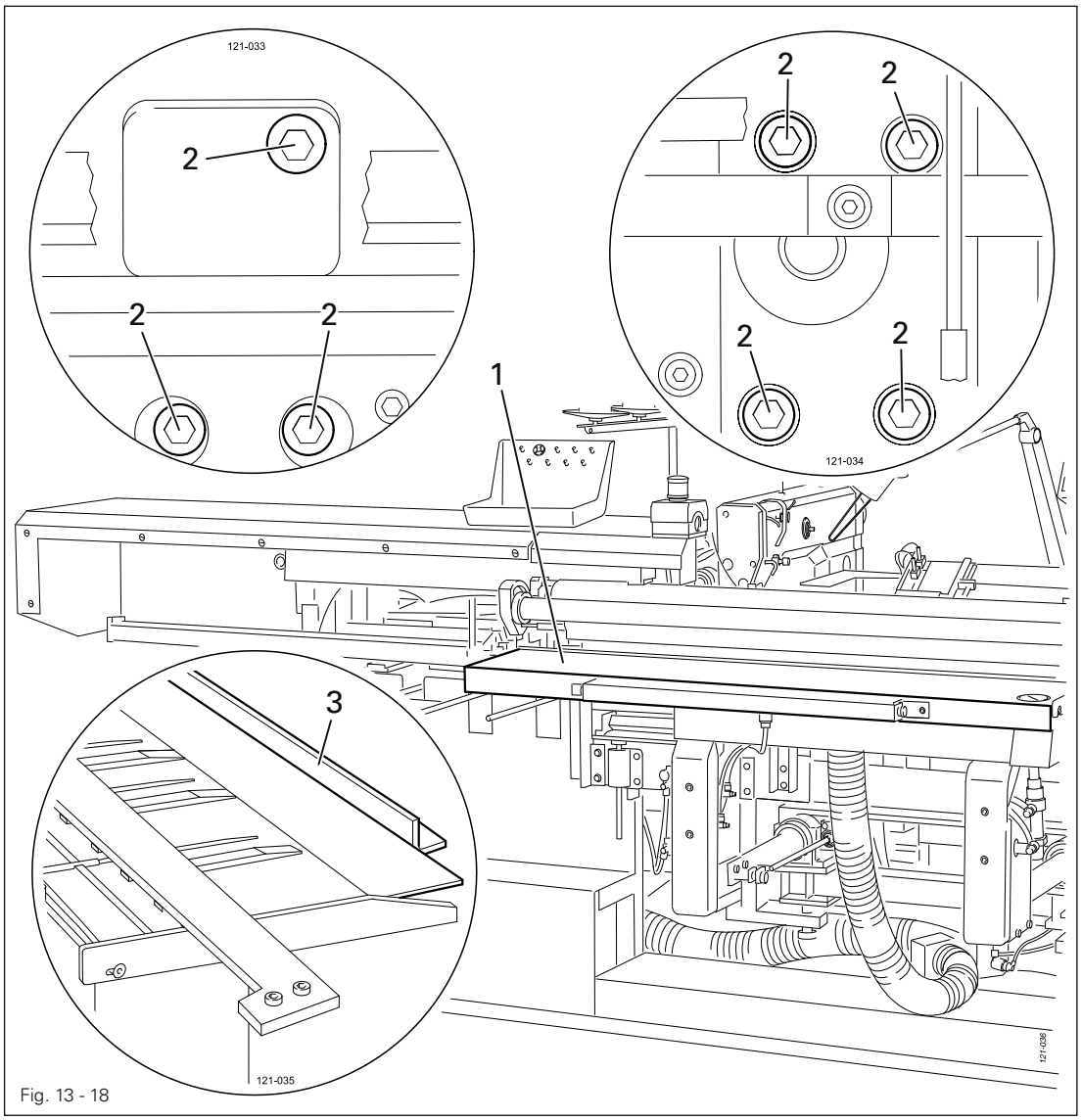

Fig. 13 - 18

- Detach the cover plate from the loading table **1.**
- Move loading table **1** in by hand.
- Adjust loading table **1** (screws **2)** in accordance with the **requirement**.
- Replace the cover plate.

13.07.03 Retraction depth of the loading table

Requirement

1. With the loading table retracted, there must be a distance of **12 mm** between the front edge of the table and the center of the needle hole.
2. With the loading table extended, screws **4** must touch the stops.

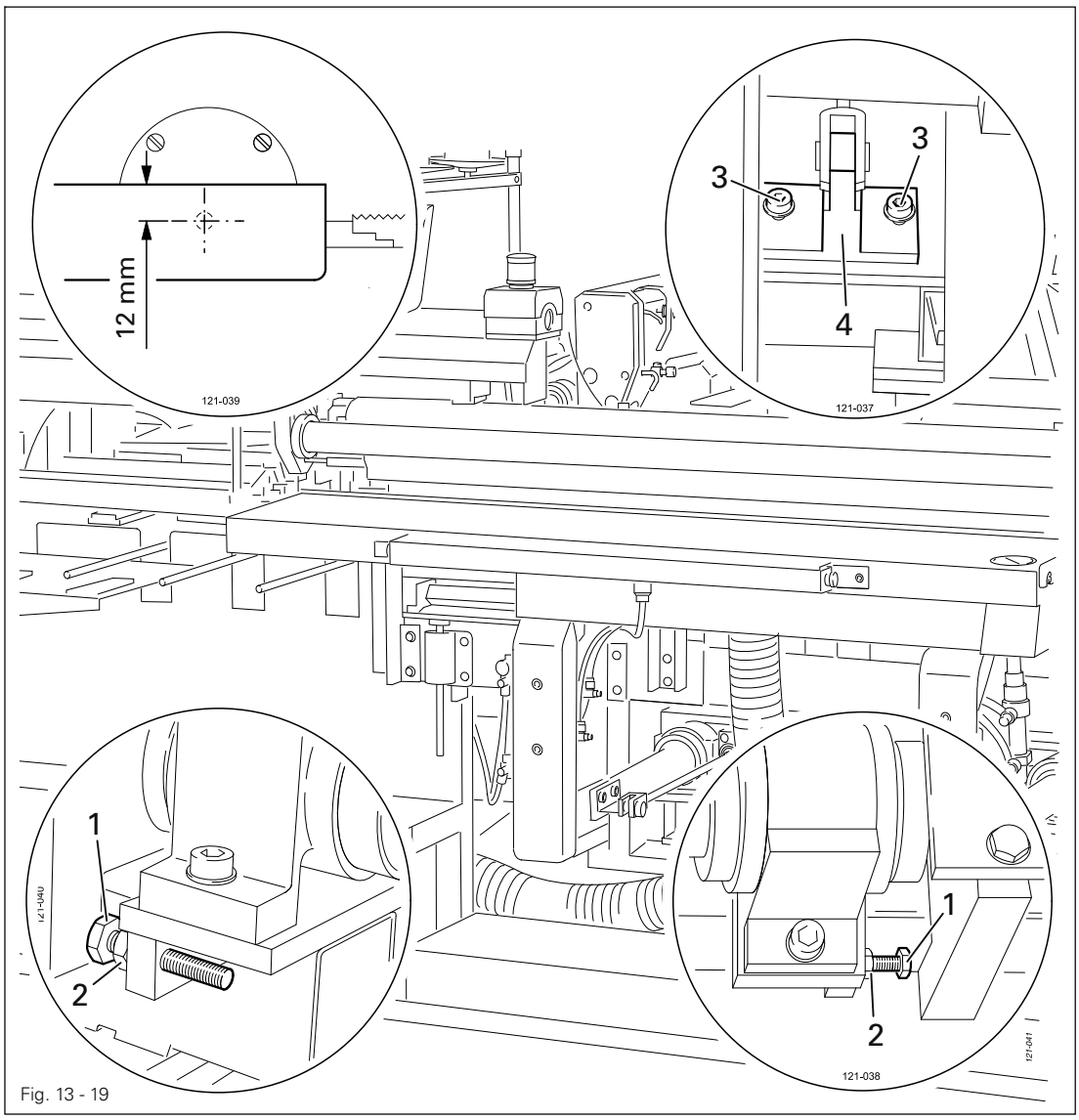

Fig. 13 - 19

- Turn screws **1** (nuts **2**) so far that they no longer touch the limit stops.
- Adjust cylinder (screws **3** on cylinder holder **4**) in accordance with **requirement 1.**
- Adjust screws **1** (nuts **2**) in accordance with **requirement 2.**

13.08 Adjusting the sewing head

13.08.01 Height of the sewing head

Requirement
The top edge of the machine's bedplate should have a clearance of **0.5 mm** to cloth plate **5.**

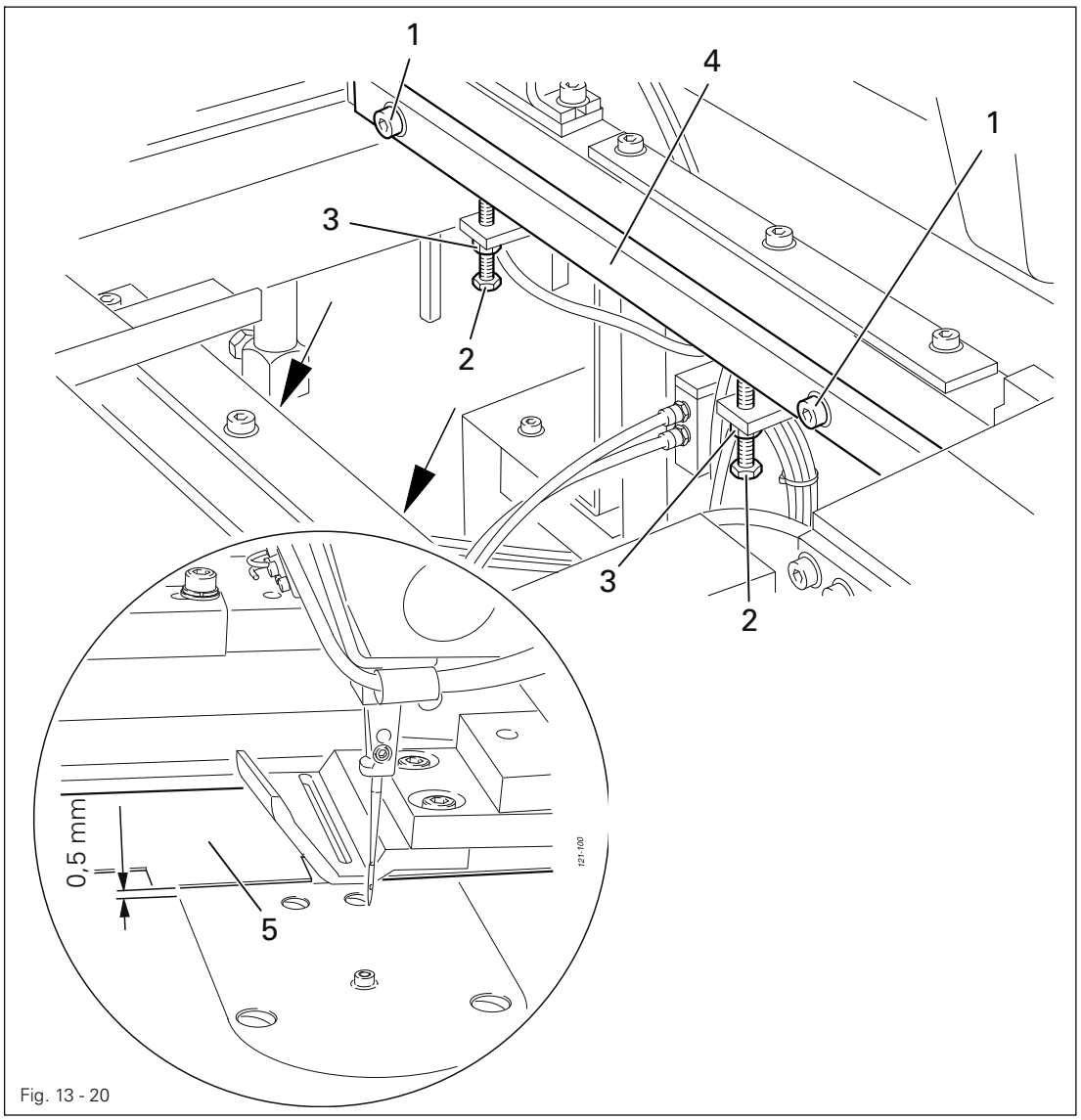

Fig. 13 - 20

- Bring the machine head into the servicing position, see Chapter **13.04 Servicing position of the machine head**.
- Loosen screws **1.**
- Adjust screws **2** (nuts **3)** in accordance with the **requirement**, while making sure that bar **4** is horizontal.
- Tighten screws **1.**
- Bring the machine head back into the working position.

13.08.02 Side adjustment of the machine head

Requirement

1. There should be a clearance of **50 mm** between the front edge of the spreader **5** and the centre of the needle hole.
2. The sewing head should be positioned at right angles to the loading table.

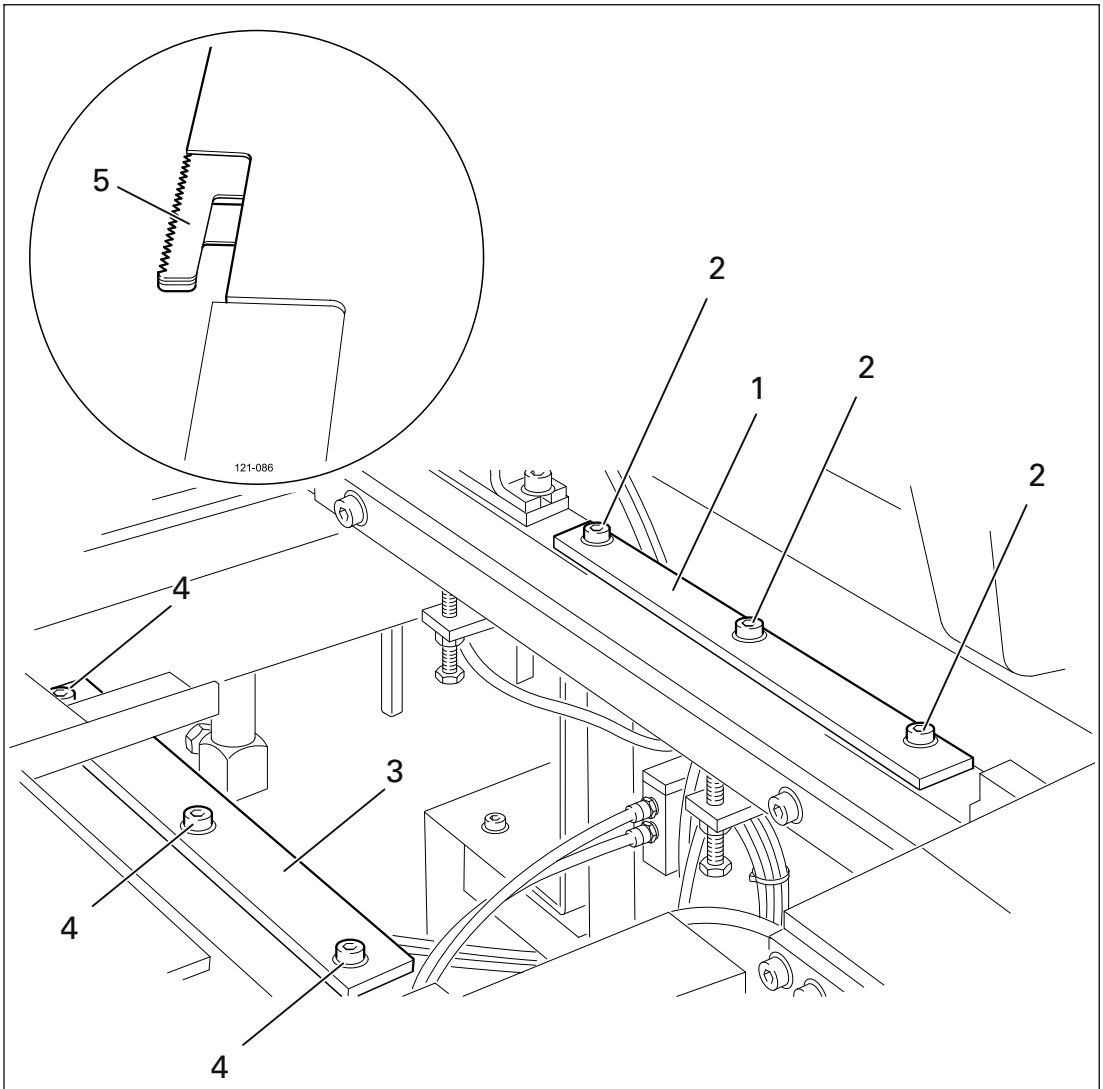

Fig. 13 - 21

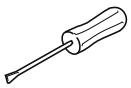

- Adjust bar **1** (screws **2)** in accordance with the **requirements**.
- Place bar **3** (screws **4)** parallel and without play against the sewing head.

13.09 Adjusting the cloth plate

Requirement

1. The cloth plate **1** should be parallel to the front edge of the loading table.
2. There should be a clearance of **1 mm** between the needle plate insert and the cloth plate **1.**

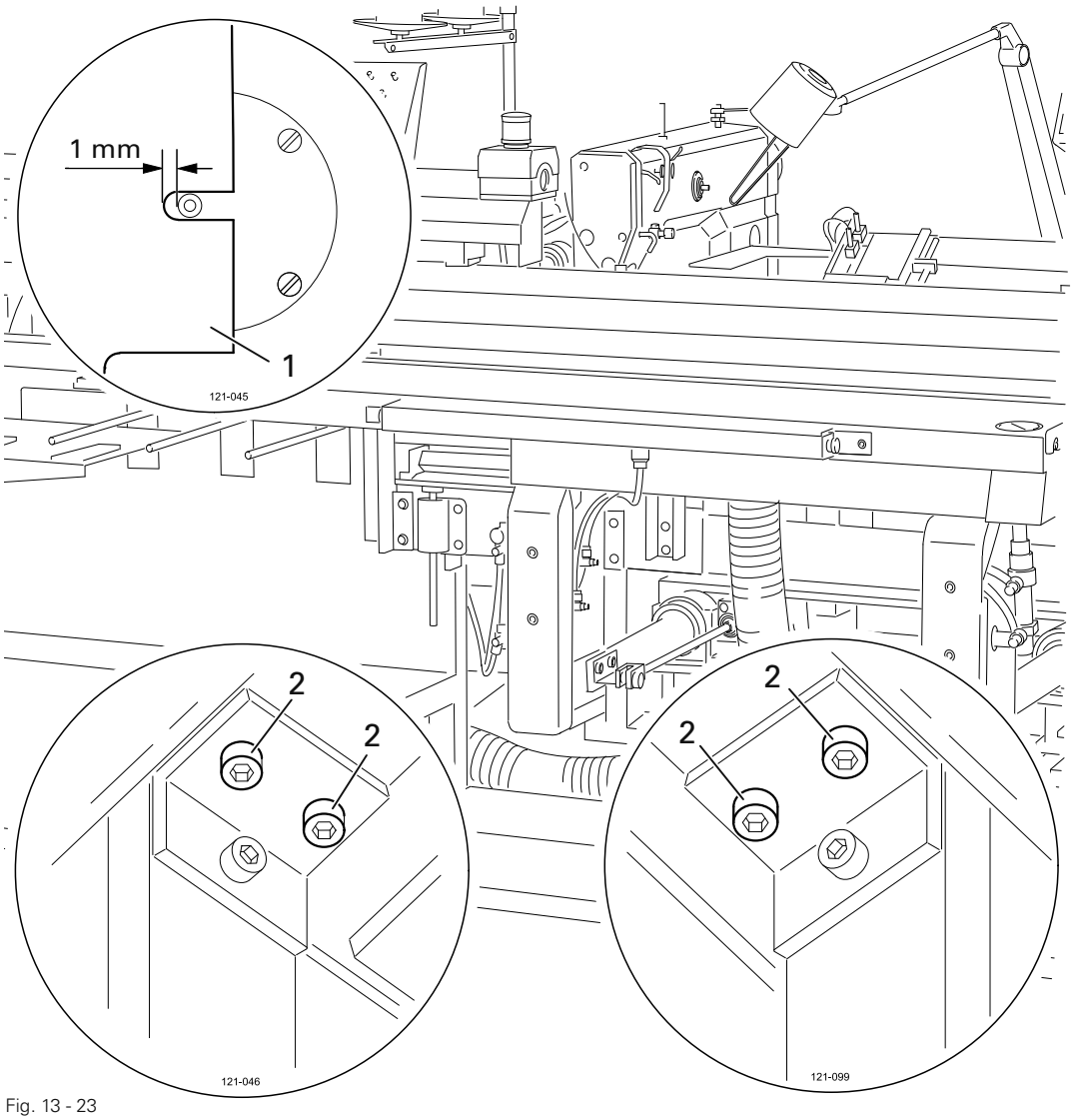

Fig. 13 - 23

- Adjust the cloth plate **1** (screws **2,** under the cloth plate) in accordance with the **requirements**.

13.10 Adjusting the positioning tube

13.10.01 Pre-setting the positioning tube

Requirement
When the positioning tube is in its top position, holder **1** should be parallel to holder **3.**

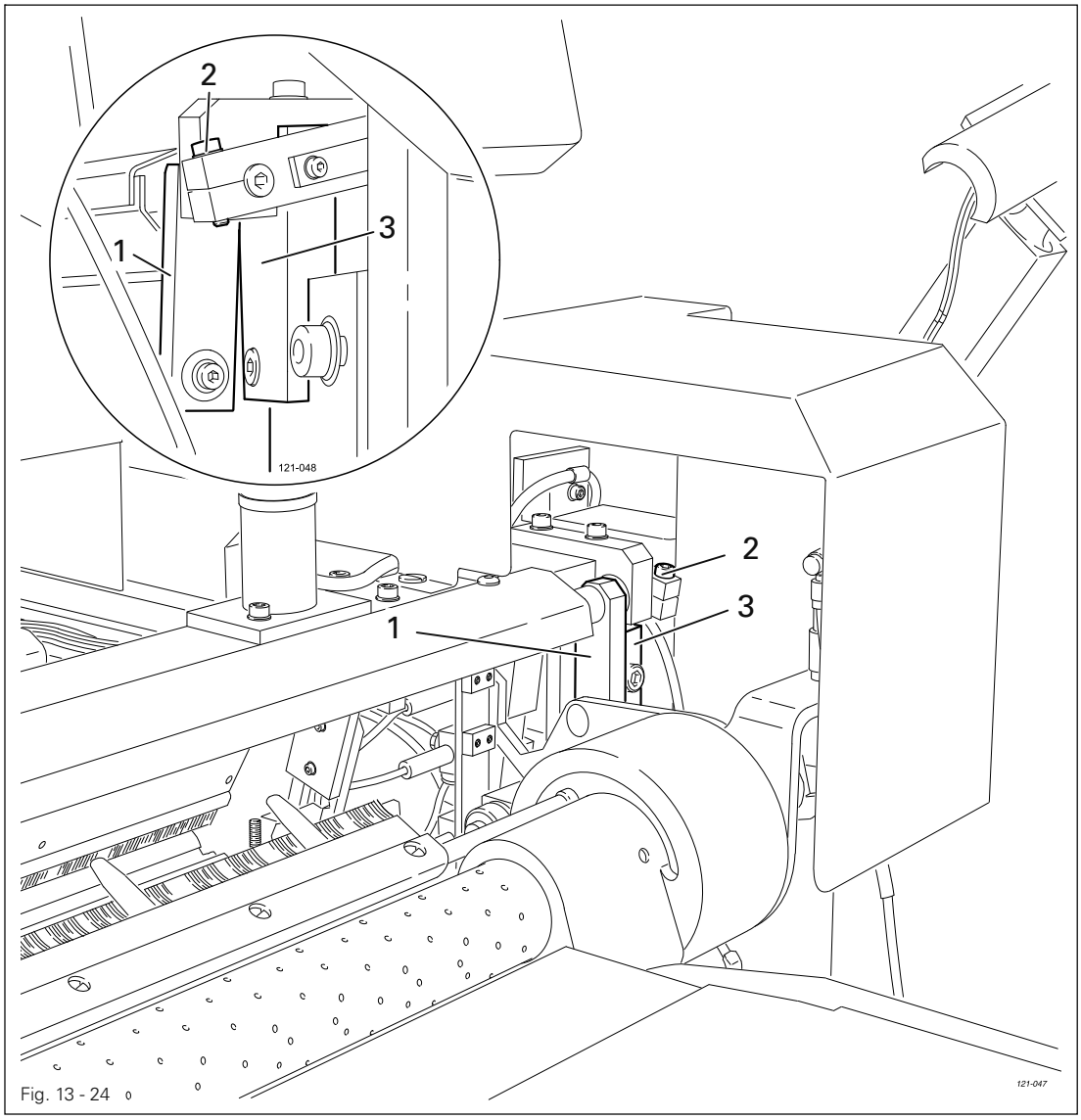

Fig. 13 - 24

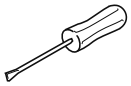

- Adjust holder **1** (screw **2**) in accordance with the **requirement.**

13.10.02 Front end position of the positioning tube

Requirement
When the positioning tube **1** is in its front end position, it should be parallel to and touching the loading table.

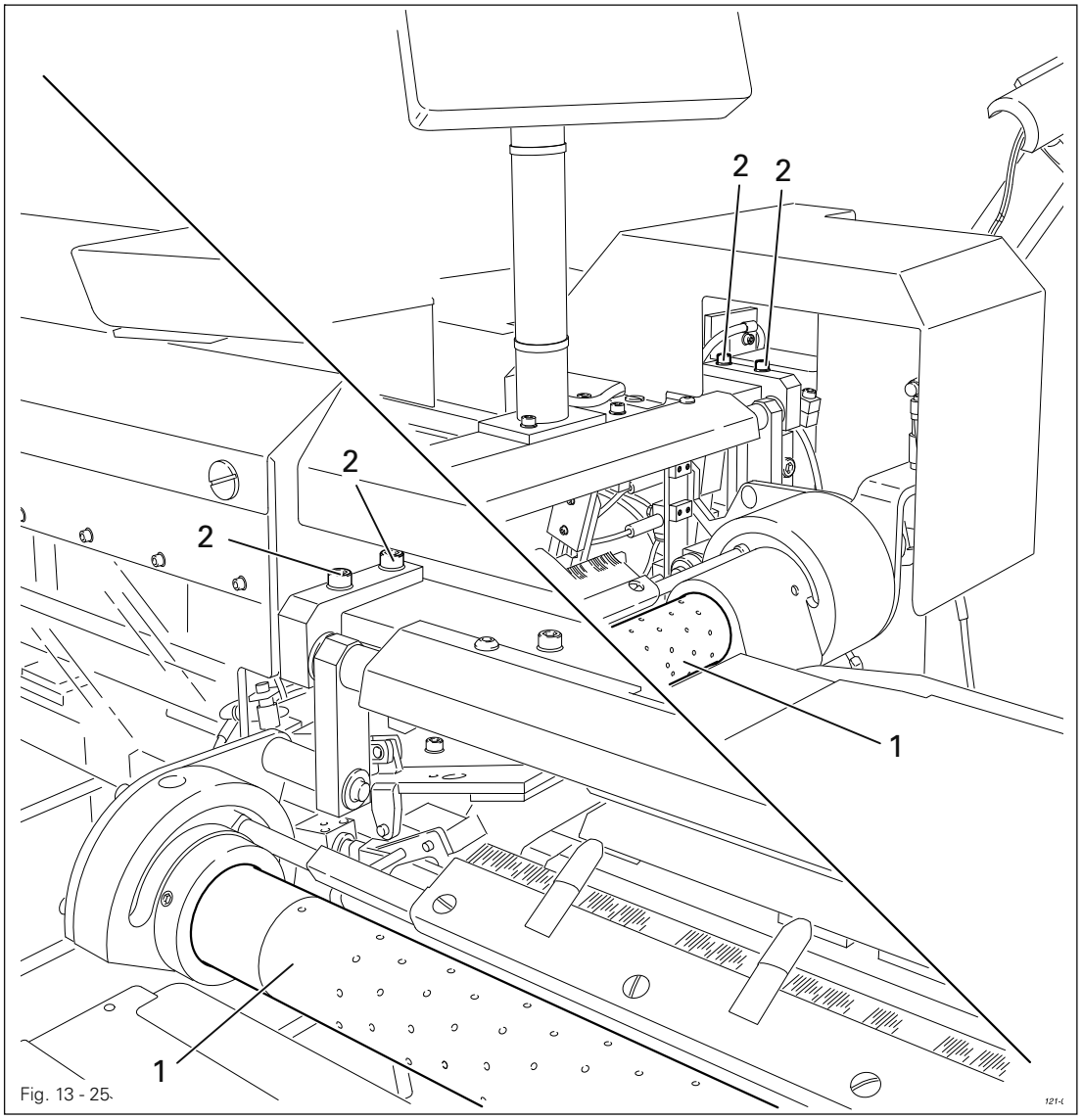

Fig. 13 - 25

- Adjust positioning tube **1** (screws **2**) in accordance with the requirement.

13.10.03 Height and location of the positioning tube

Requirement
When positioning tube **3** is in its front end position
1. its top edge should be at a distance of **18.9 mm** from the top side of the loading table and
2. the corresponding holes on the marking should be centred to the needles of the loading table.

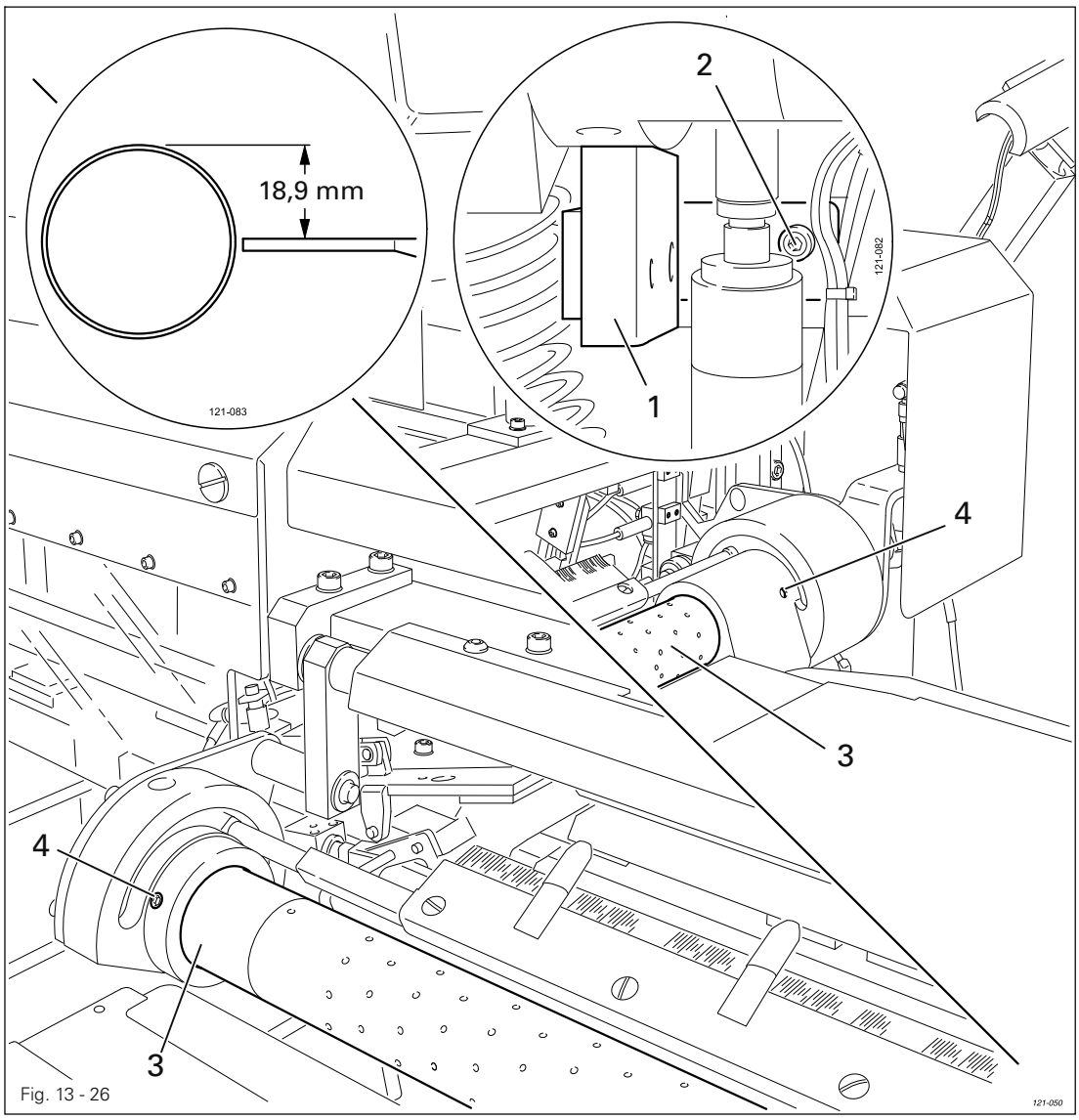

Fig. 13 - 26

- Adjust stop **1** (screw **2**) in accordance with **requirement 1.**
- Turn or slide positioning tube **3** (two screws **4** respectively) in accordance with **requirement 2.**

13.11 Height of the needles

Requirement
When the needles are extended, there should be a **4 mm** clearance between the needle points and the front edge of the loading table **1.**

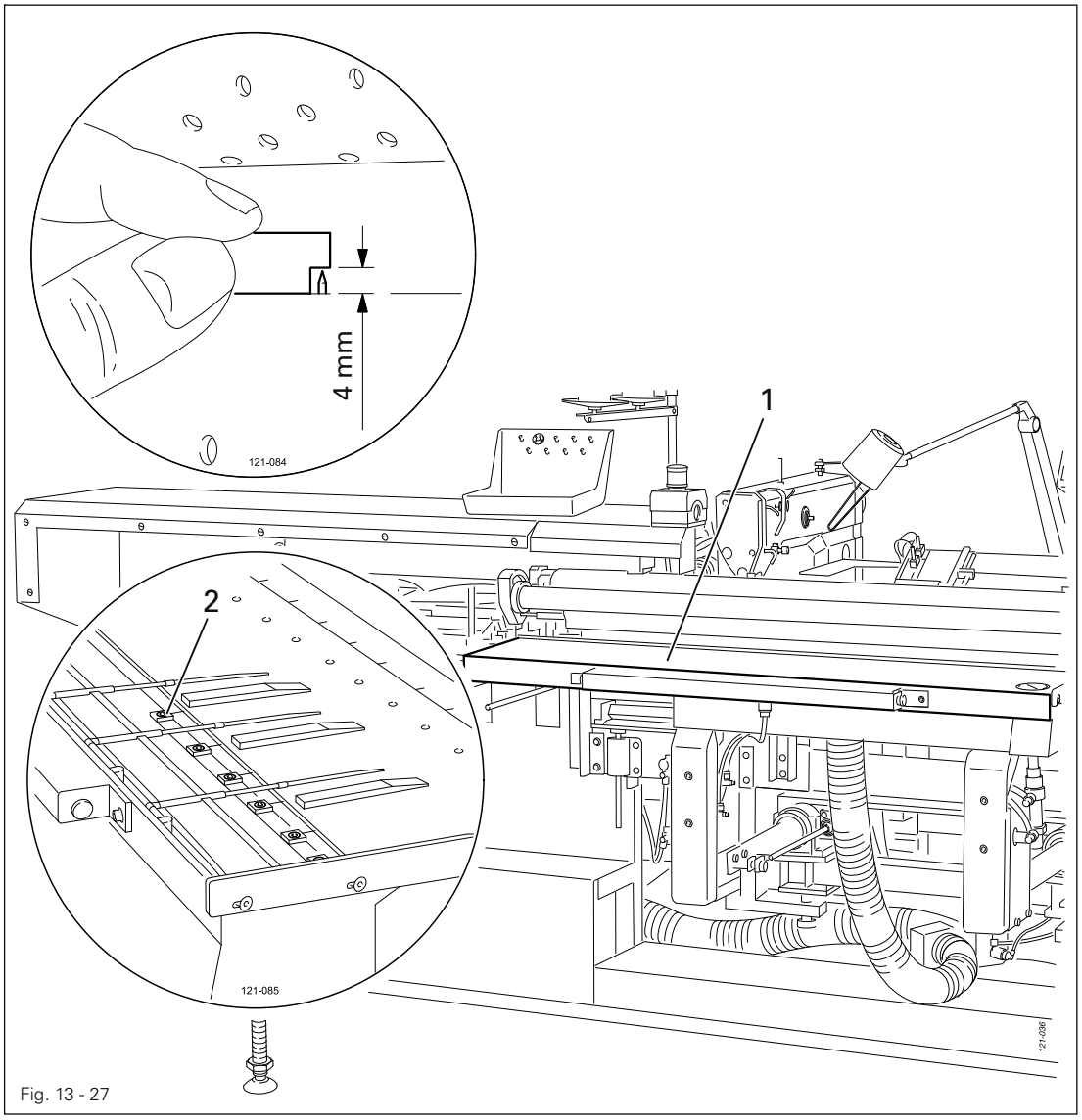

Fig. 13 - 27

- Detach the cover plate of loading table **1.**
- Extend the needles.
- Adjust needles **1** (screws **2**) in accordance with the **requirement**.

The cover plate remains detached for further adjustments.

13.12 Adjusting the spreader

Requirement

1. When retracted, spreader **1** should be flush with the front edge of the loading table.
2. When being extended, spreader **1** should cover a distance of **3 mm**.

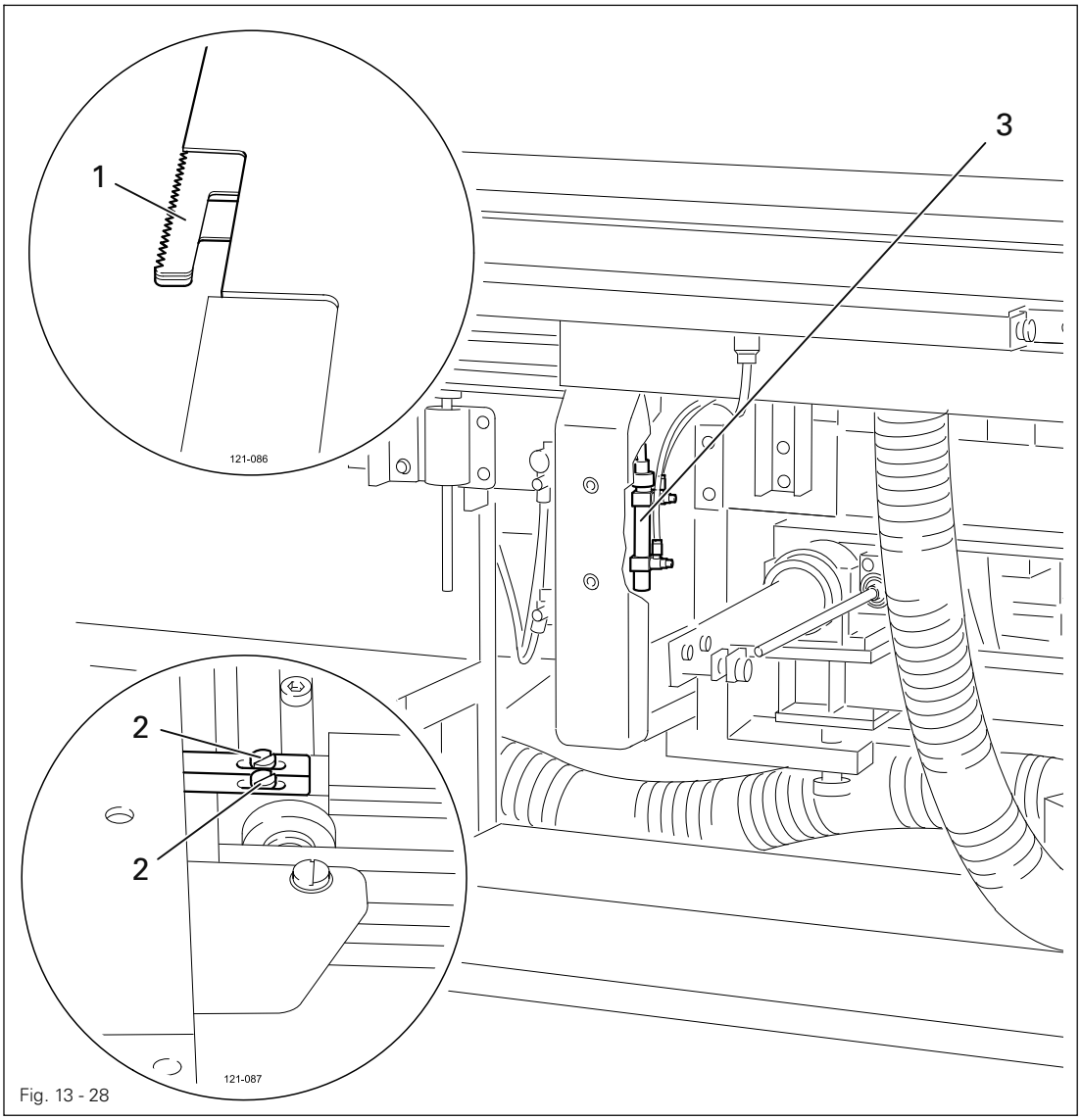

Fig. 13 - 28

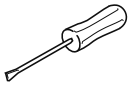

- Adjust spreader **1** (screws **2**) in accordance with **requirement 1.**
- Turn yoke head (nut) of cylinder **3** in accordance with **requirement 2.**

13.13 Adjusting the table extension

Requirement
When the table extension **1** is in the extended position, its front edge should be flush with the front edge of the loading table.

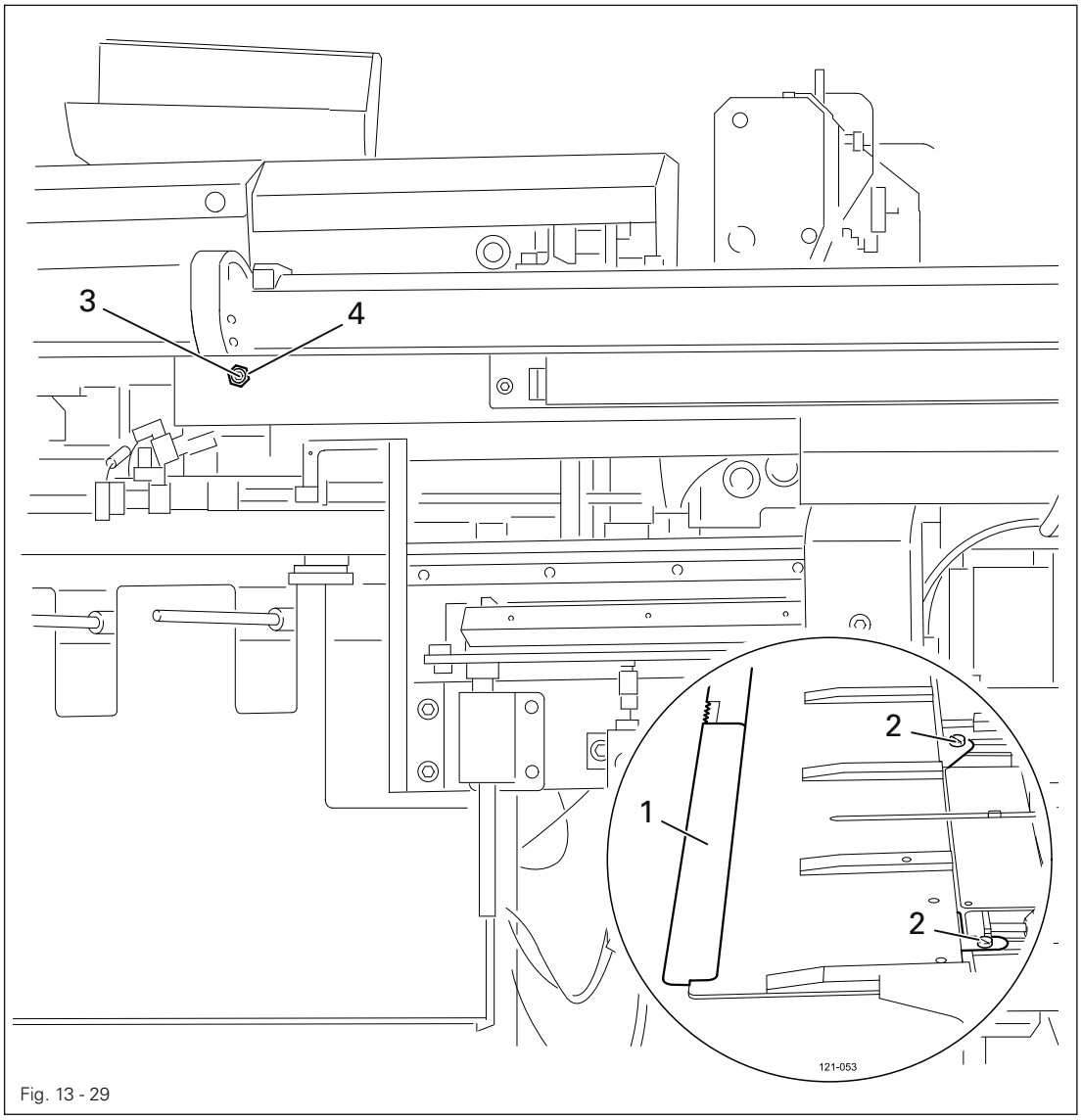

Fig. 13 - 29

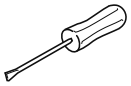

- Adjust table extension **1** (screws **2**) in accordance with the requirement.



If required, the distance between the inserted table extension **1** and the loading table can be altered to match the depth of the notch on screw **3** (nut **4**).

13.14 Adjusting the loading clamp

13.14.01 Height of the loading clamp

Requirement

1. The claws of the loading clamp must touch the retracted loading table from the top and the bottom at the same time.
2. The claws must be parallel to the loading table.

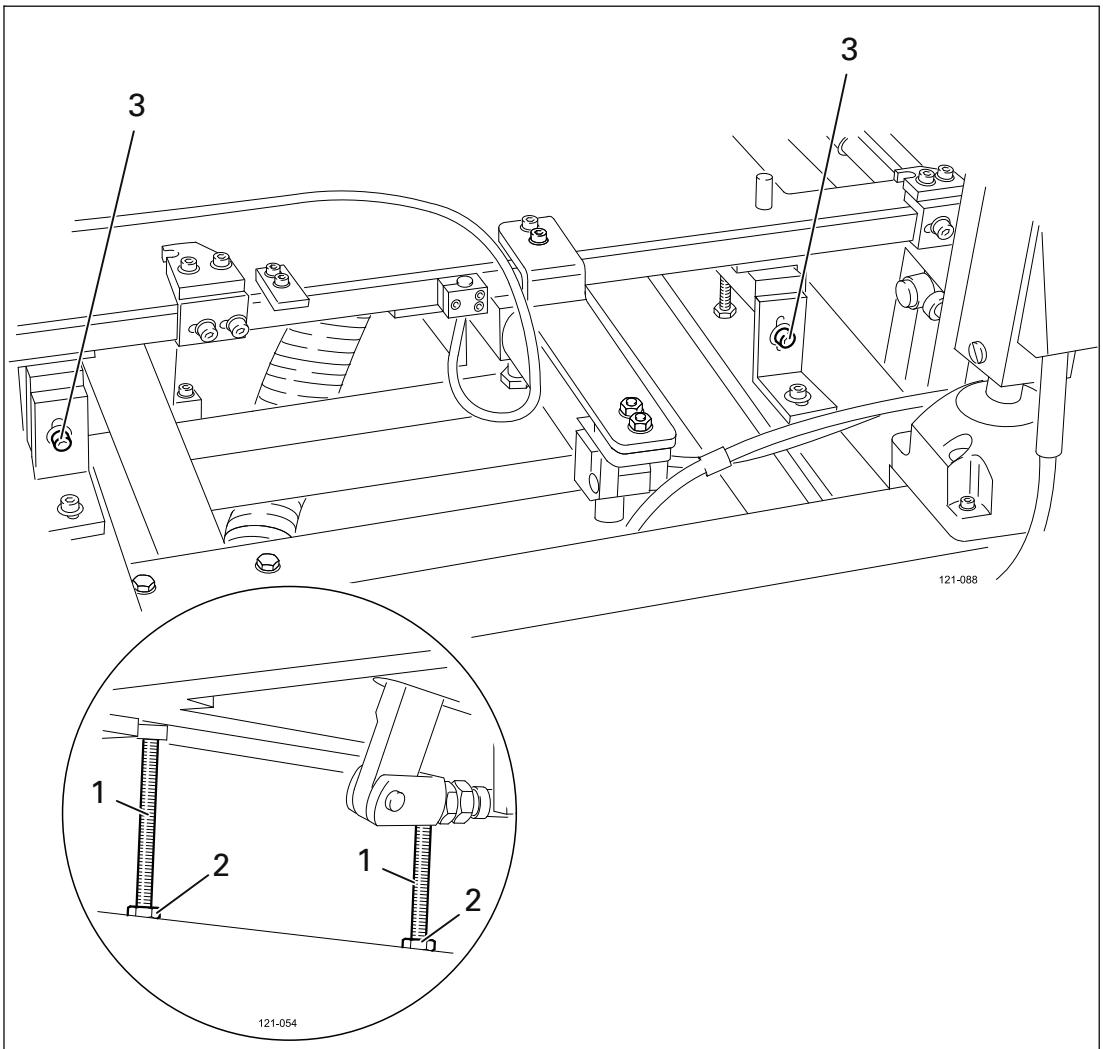

Fig. 13 - 30

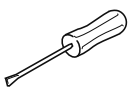

- Adjust stay bolts **1** (nuts **2** and screws **3)** in accordance with the **requirements**.

13.14.02 Position of the loading clamp

Requirement

1. The inner claws of the loading clamp must touch the retracted loading table approx. **6** to **7 mm** behind the front edge.
2. The distance between the front claw edge of the loading clamp and the center of the needle hole must be **50 mm**.

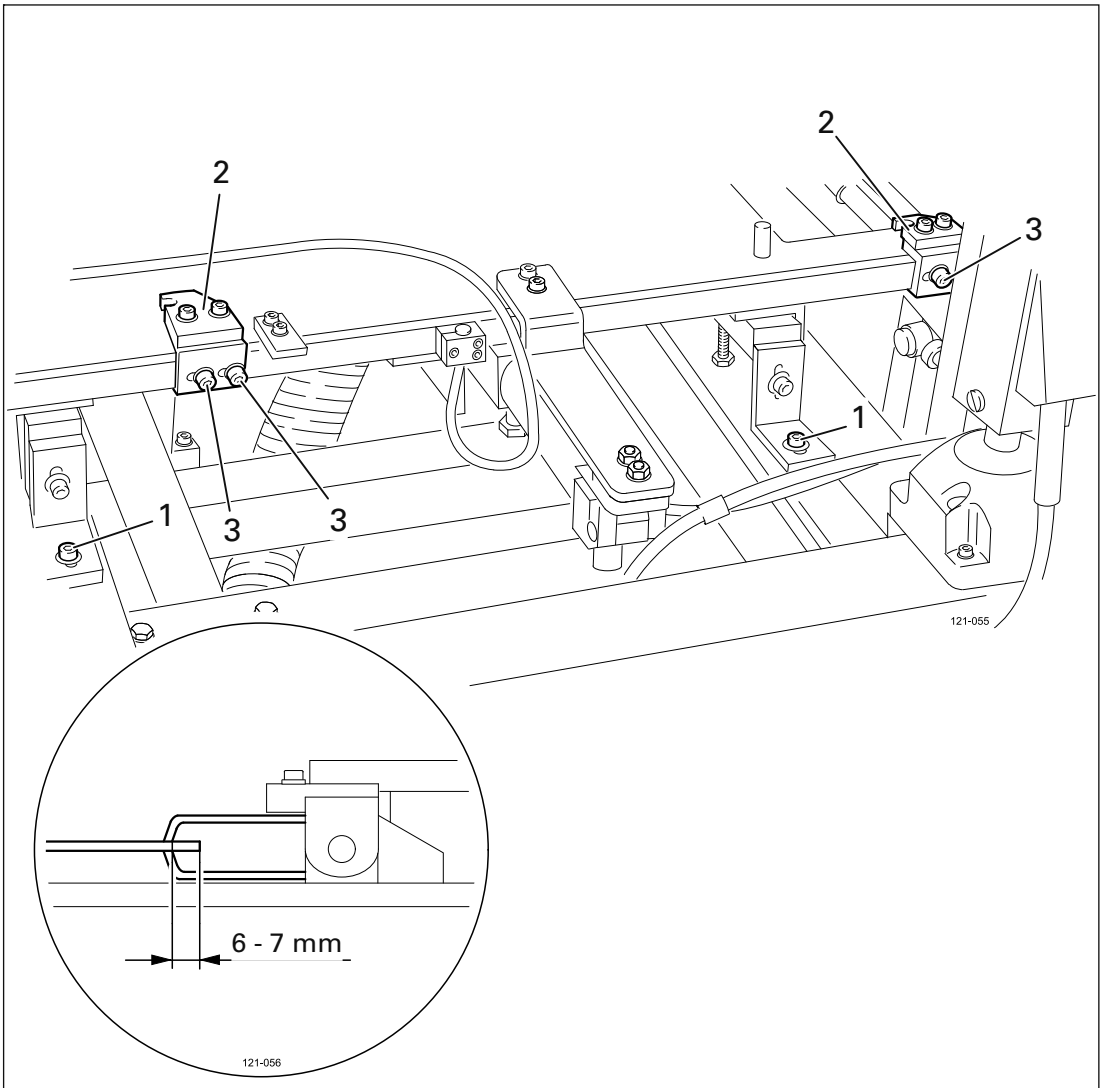

Fig. 13 - 31

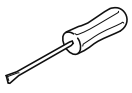

- Adjust the loading clamp (screws **1)** in accordance with **requirement 1.**
- Adjust brackets **2** (screws **3)** in accordance with **requirement 2.**

13.15 Adjusting the brushes

13.15.01 Adjusting the long brushes

Requirement

1. The closed brushes **1** should rest parallel on the loading table and close to such an extent, that the material is smoothed perfectly, whereby the loading table should move into the exact centre between brushes **1.**
2. The open brushes **1** should be approx. **10 mm** apart.

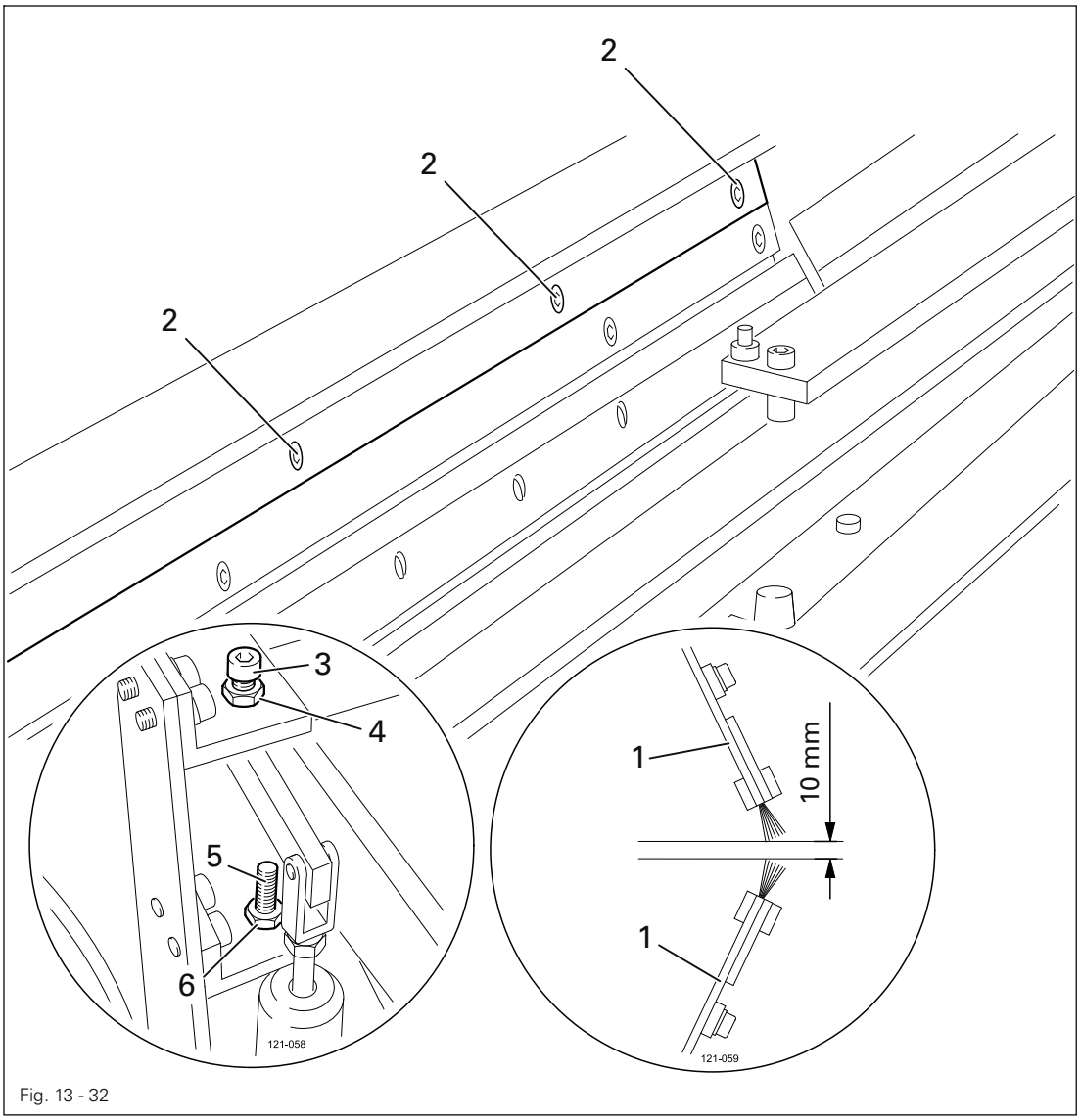

Fig. 13 - 32

- Adjust brushes **1** (screws **2**), screw **3** (nut **4**) and screw **5** (nut **6**) in accordance with the **requirements**.

How far the brushes **1** close depends on the material and must be corrected in accordance with the sewing result.

13.15.02 Adjusting the short brushes

Requirement

1. When the brushes are closed, the top and the bottom brush should just be resting on or touching on the loading table.
2. When the brushes are open, the top and the bottom brush should each have a distance of approx. **4 mm** to the loading table.

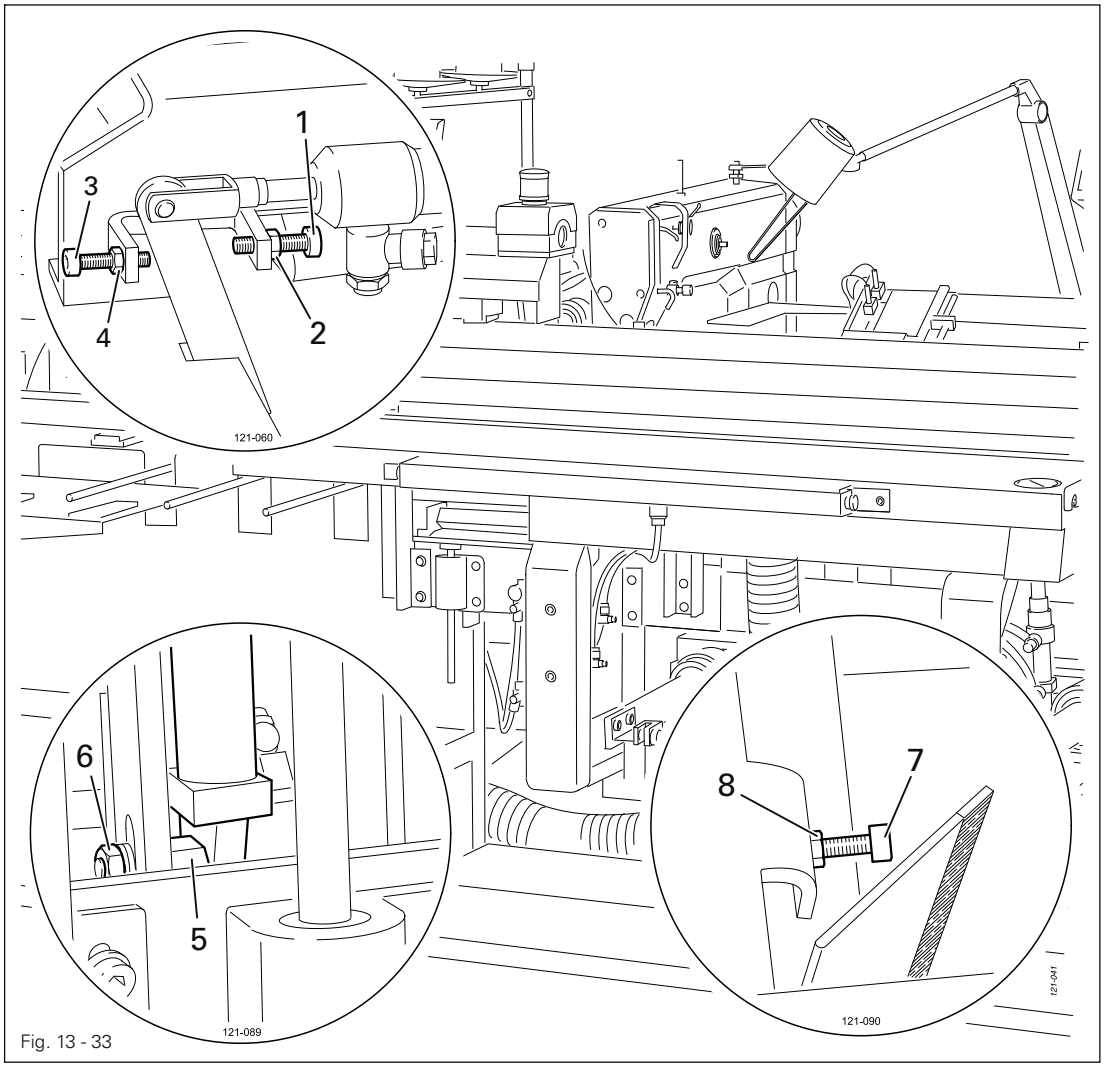

Fig. 13 - 33

Adjusting the top brushes:

- Turn screw **1** (nut **2)** in accordance with **requirement 1.**
- Turn screw **3** (nut **4)** in accordance with **requirement 2.**

Adjusting the bottom brushes:

- Adjust cylinder holder **5** (nut **6)** in accordance with **requirement 1.**
- Turn screw **7** (nut **8)** in accordance with **requirement 2.**

How far the brushes **1** close depends on the material and must be corrected in accordance with the sewing result.

13.16 Adjusting the knife unit

13.16.01 Pre-setting the knife unit

Requirement

1. The rear edge of the engaged catcher should be tilted approx. 2° forwards.
   (In this case, the centre of screw 6 is more or less flush with the outer edge of screw 7.)
2. Position the catcher on the material fold (in the case of medium material thickness).
3. When the catcher is engaged, the top point of the knife should be touching the material.

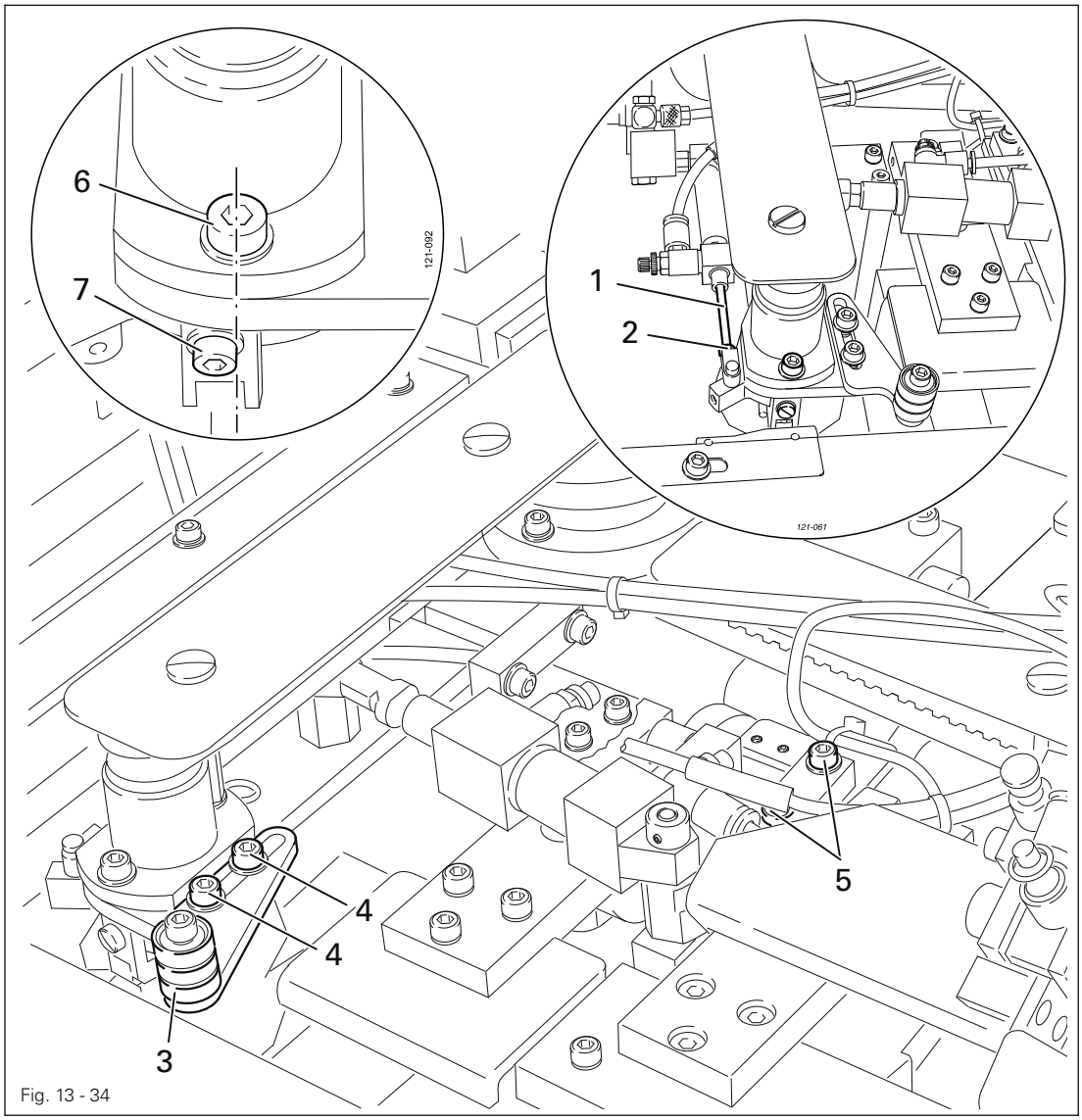

Fig. 13 - 34

- Adjust piston rod 1 (nut 2) in accordance with **requirement 1.**
- Adjust stop 3 (screws 4) in accordance with **requirement 2.**
- Adjust knife unit 5 (screws 5) in accordance with **requirement 3.**

13.16.02 Height of the knife unit

Requirement
The catcher should move into the centre of the spreader.

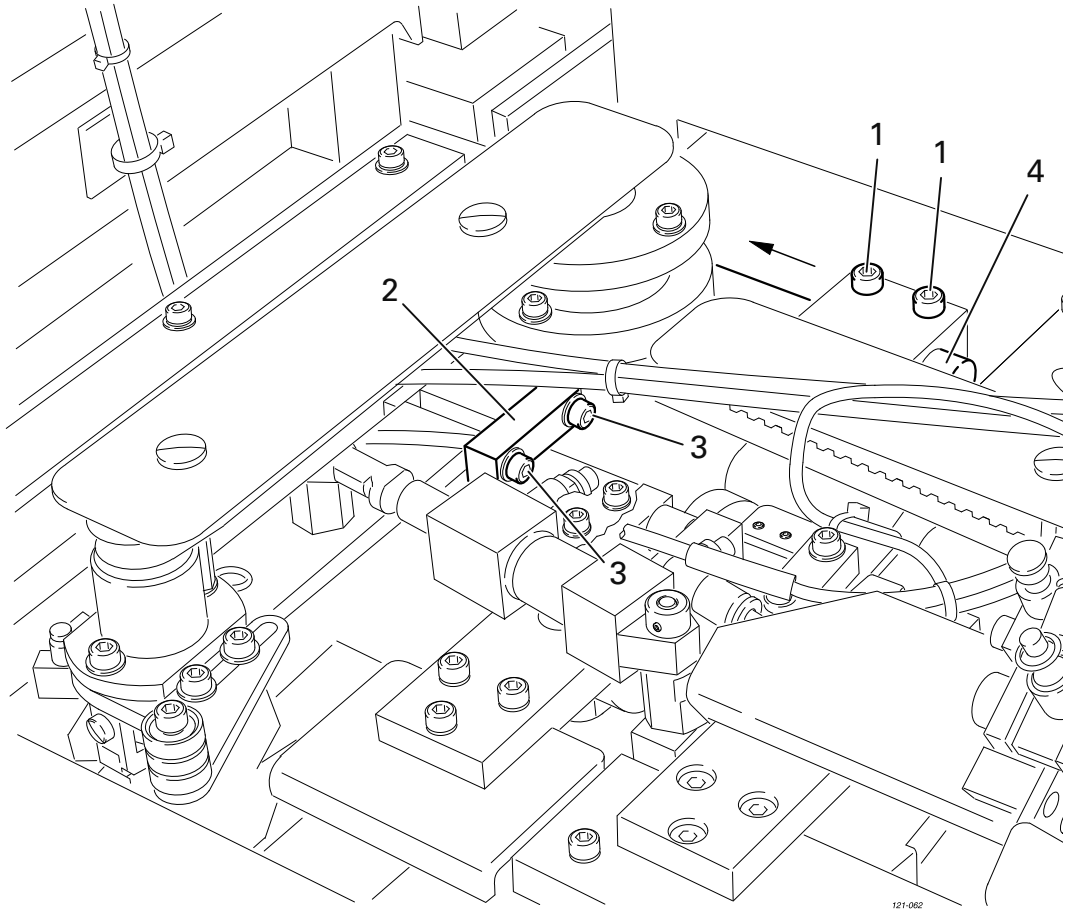

Fig. 13 - 35

- Loosen screws **1.**
- Adjust plate **2** (screws **3)** in accordance with the **requirement**.
- Press against bar **4** in the direction of the arrow and tighten screw **1.**

13.16.03 Knife change

Requirement
When the knife starts to cut less well, it must be changed.

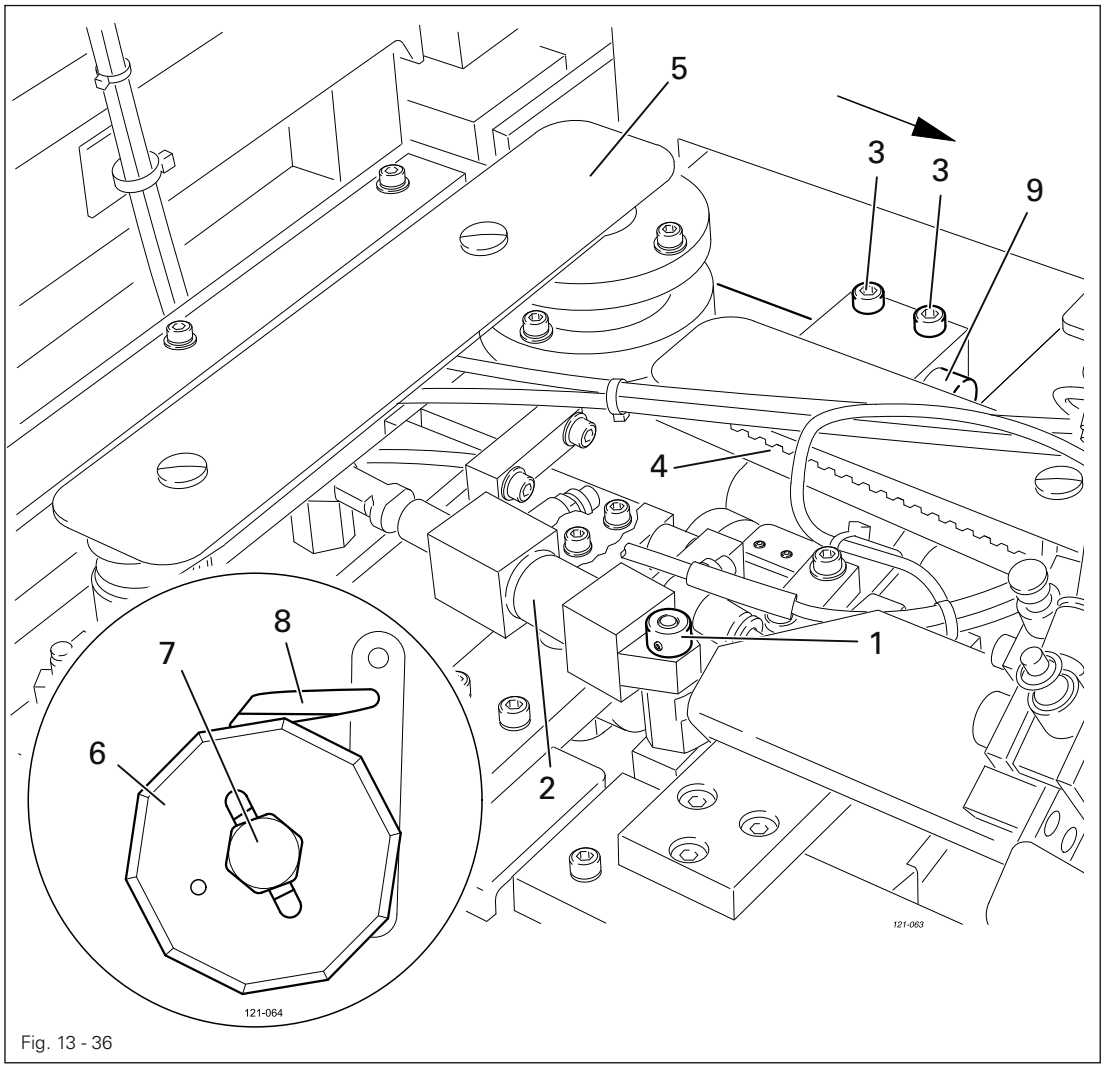

Fig. 13 - 36

- Open the clamping lever on the loading clamp.
- Loosen the capstan screws and push the loading clamp in the direction of the arrow.
- Dismantle collar **1** and remove cylinder **2.**
- Loosen screws **3** and remove toothed belt **4.**
- Swing up knife unit **5.**
- Change knife **6** (screw **7**)**,** making sure that the widest part of knife **6** does not touch catcher **8.**
- If necessary, remove catcher **8** and insert washers.
- Replace toothed belt **4,** press it against bar **9** and tighten screws **3.**
- Replace cylinder **2** and fit collar **1.**
- Push back the loading clamp as far as possible, close the clamping lever and tighten the capstan screws.

13.17 Adjusting the workholder bar

13.17.01 Zero point of the workholder bar

Requirement

1. There should be a distance of **5 mm** between the front edge of the workholder bar and the centre of the needle.
2. There should be a distance of approx. **0.5 mm** between the rear edge of the workholder bar and the front edge of the presser foot.

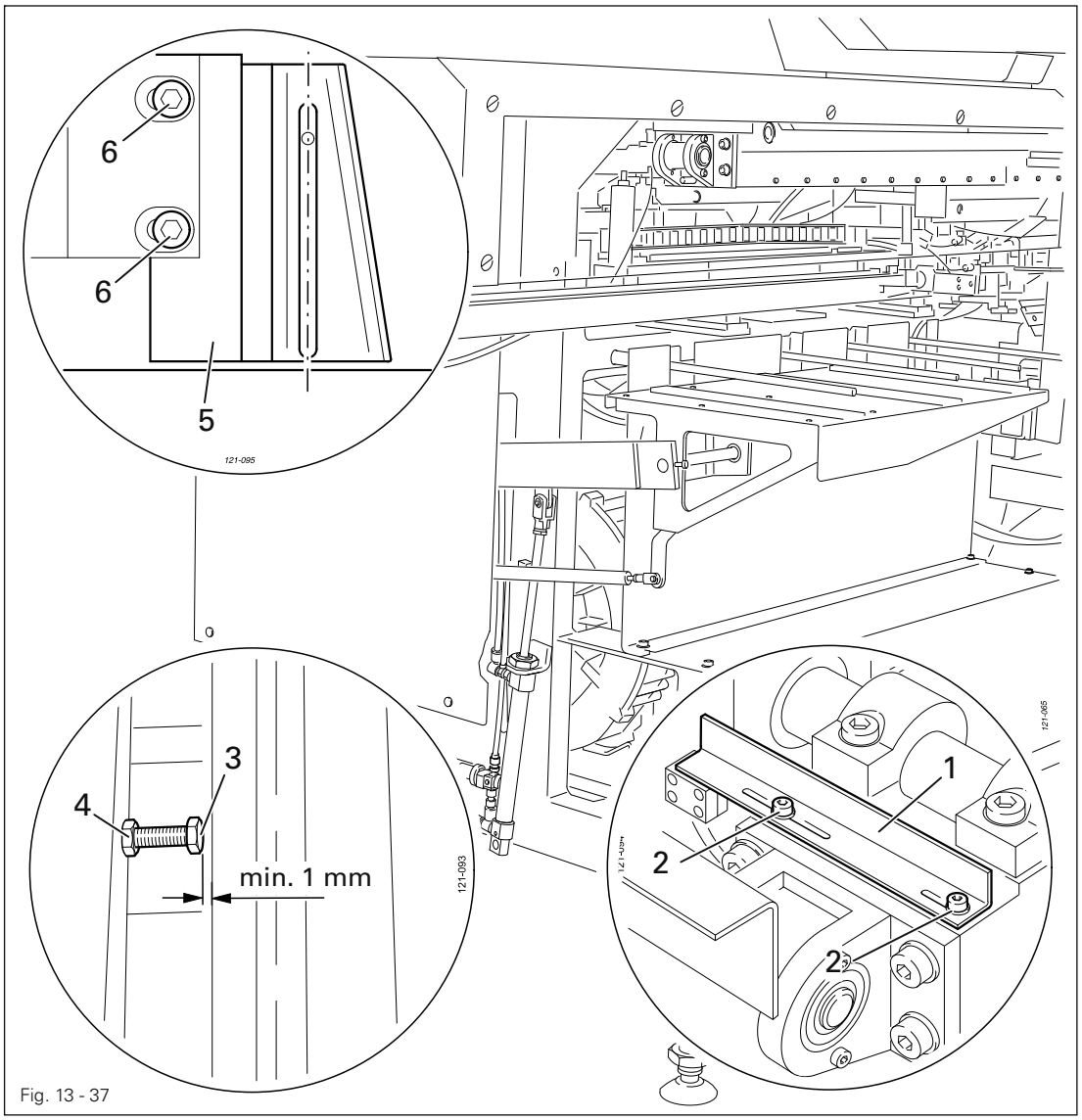

Fig. 13 - 37

- Adjust bracket **1** (screws **2**) in accordance with **requirement 1.**
- Set screw **3** (nut **4**) at a distance of **1 mm** from the stop.
- Adjust presser foot **5** (screws **6**) in accordance with **requirement 2,** paying attention that the needle penetrates in the centre of the opening..

13.17.02 Workholder bar stop

Requirement
When lowered, the workholder bar must touch the surface evenly over the entire length.

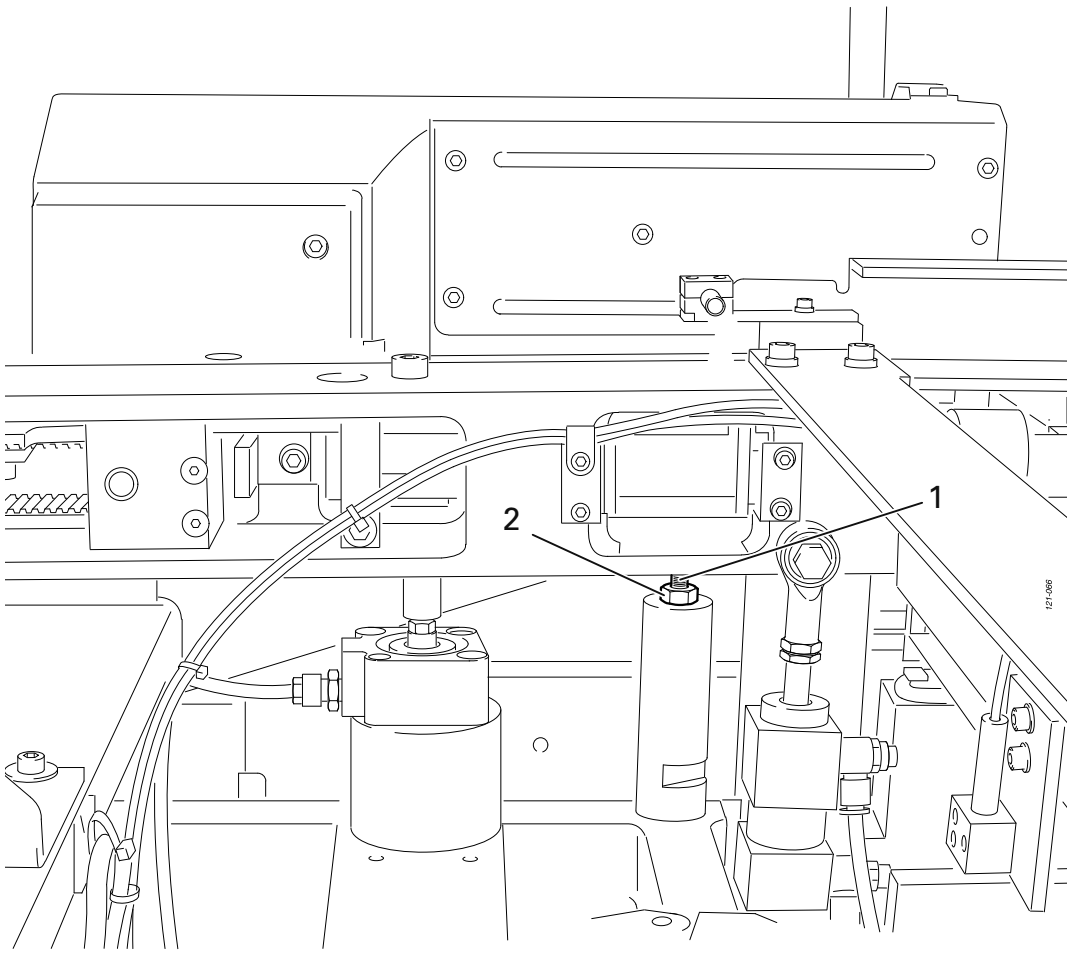

Fig. 13 - 38

- Adjust screws **1** (nuts **2)** on both sides in accordance with the **requirement**.

13.18 Adjusting the pneumatic table pressure

Requirement
When retracting the loading table, the material should not be displaced.

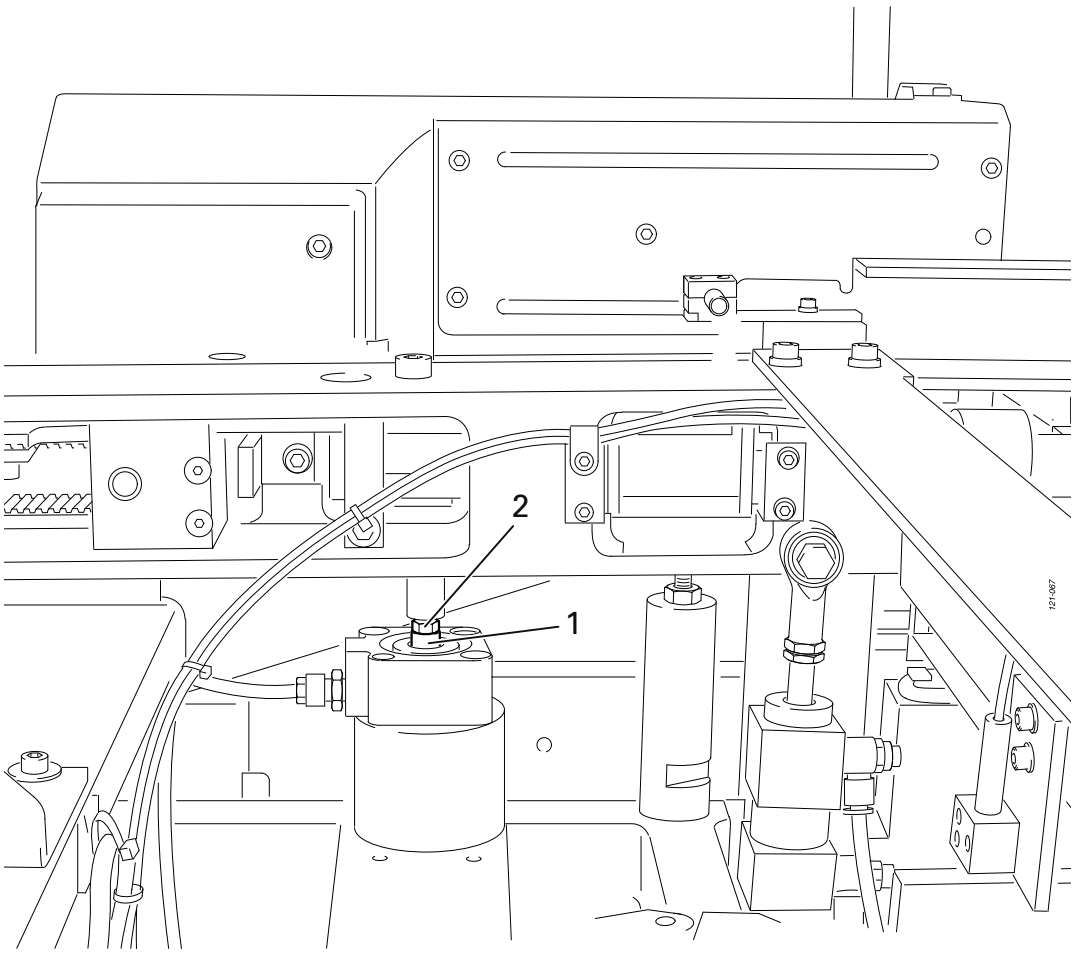

Fig. 13 - 39

- Adjust piston rod **1** (nut **2**) in accordance with the **requirement**.

13.19 Adjusting the pressure control device

Requirement
The pressure control device should switch off the machine when a pressure of **4.5** bar is reached.

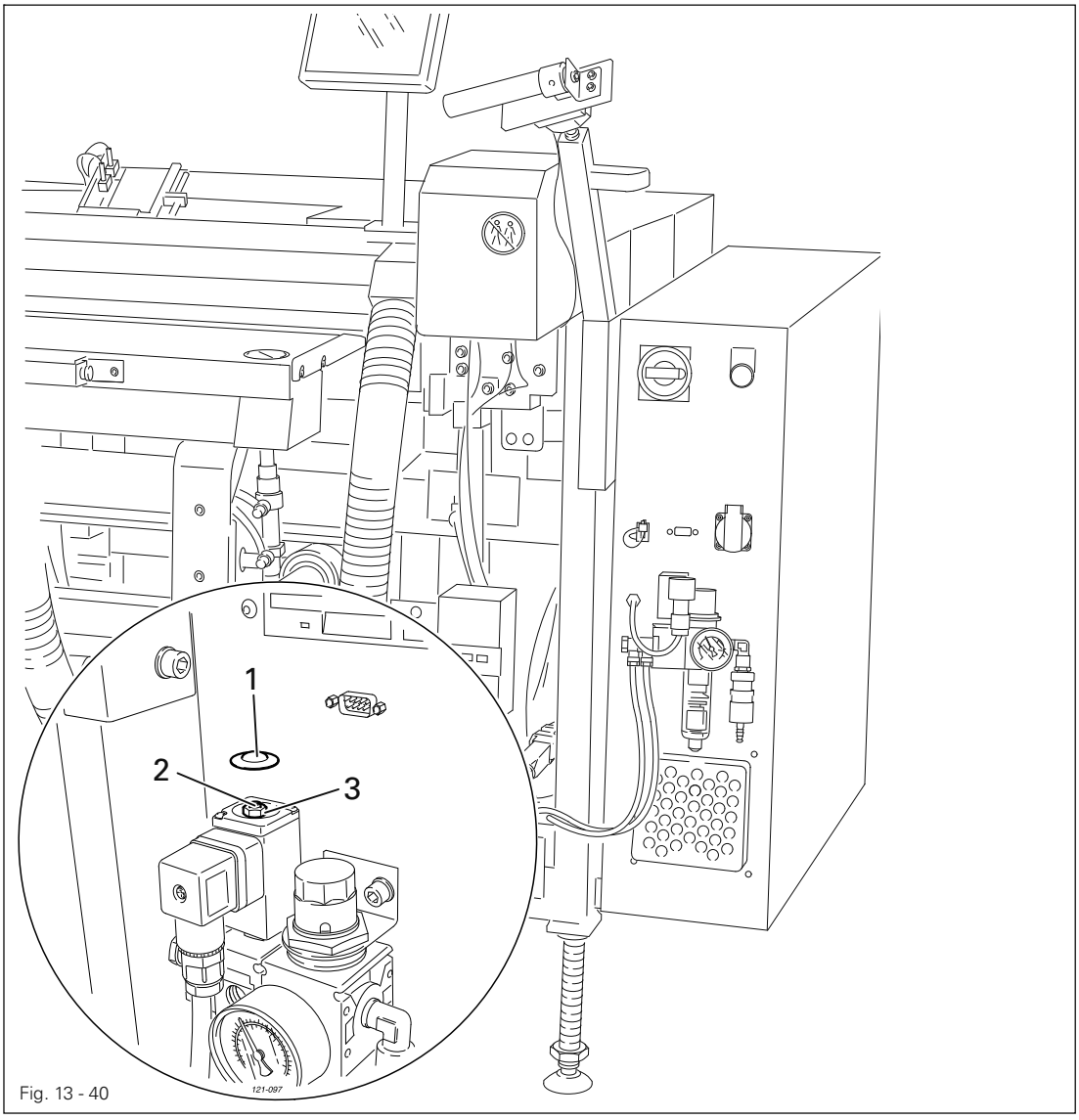

Fig. 13 - 40

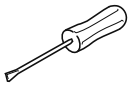

- Remove cap **1**
- Adjust screw **2** (nut **3)** in accordance with the requirement.
- Fit cap **1.**

13.20 Adjusting the stacker

Requirement

1. The stacker support must move reliably to its rearmost final position.
2. The stacker must move evenly and reliably to its highest position when loaded.

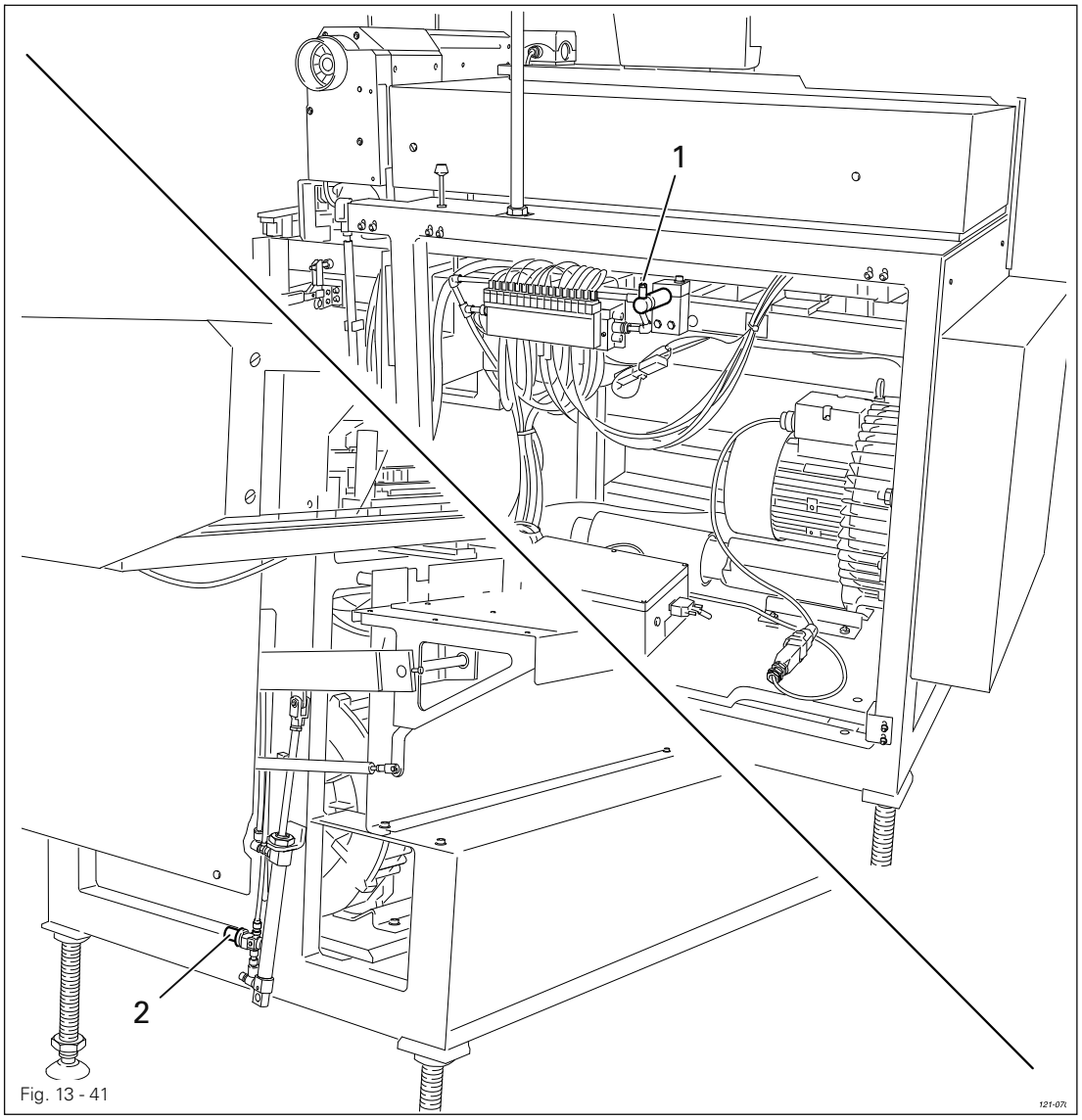

Fig. 13 - 41

- Adjust throttle **1** in accordance with **requirement 1.**
- Adjust pressure reducer **2** in accordance with **requirement 2.**

13.21 Adjusting the sensor on the stacker clamp

Requirement

1. LED 2 should light up, if there is no material between sensor 3 and reflector 4.
2. LED 5 should light up, if there is material between sensor 3 and reflector 4.

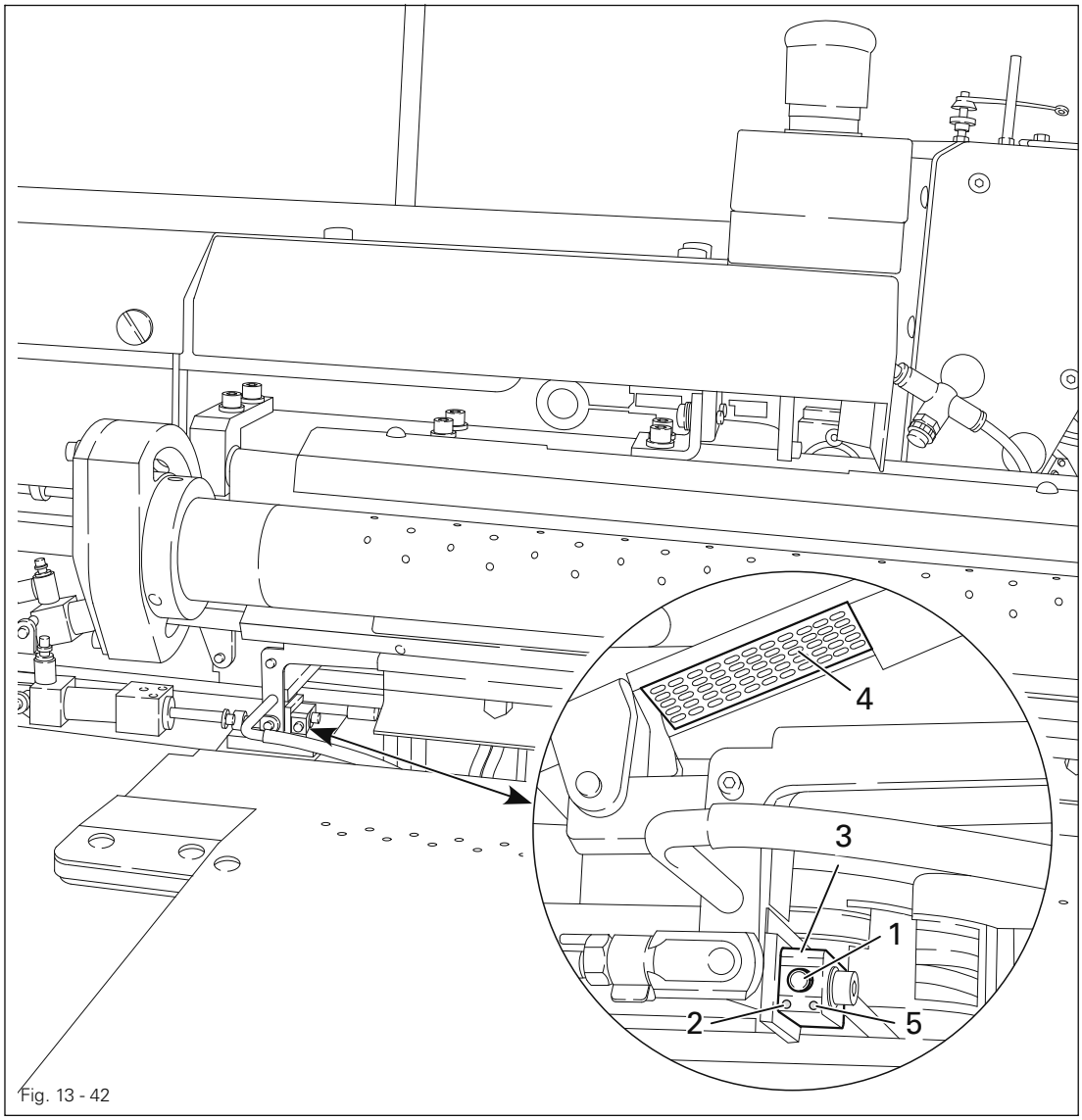

Fig. 13 - 42

- Press down key 1 for approx. 5 seconds until LED 2 flashes quickly.
- After key 1 has been released, sensor 3 begins with the learning process "no material".
- To set off the learning process "material", place a piece of think white material directly under reflector 4.
- Confirm by pressing key 1.
- Press key 1 again within 5 seconds. The starting function changes from the set-up "bright" (standard) to "dark".
- Carry out a function control in accordance with requirements 1 and 2.

Extended function control:

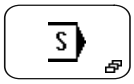

- Call up the service menu.

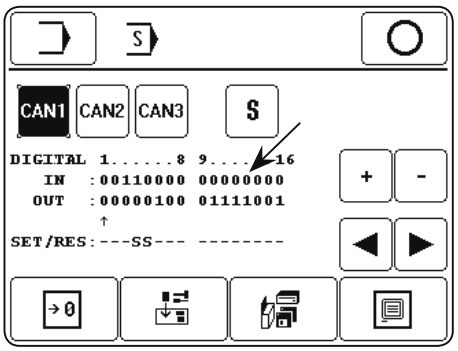

- CAN 1 input 13 (see arrow) must switch from 0 to 1, when material is placed between sensor and reflector.

13.22 Boot key

Danger – electric voltage!

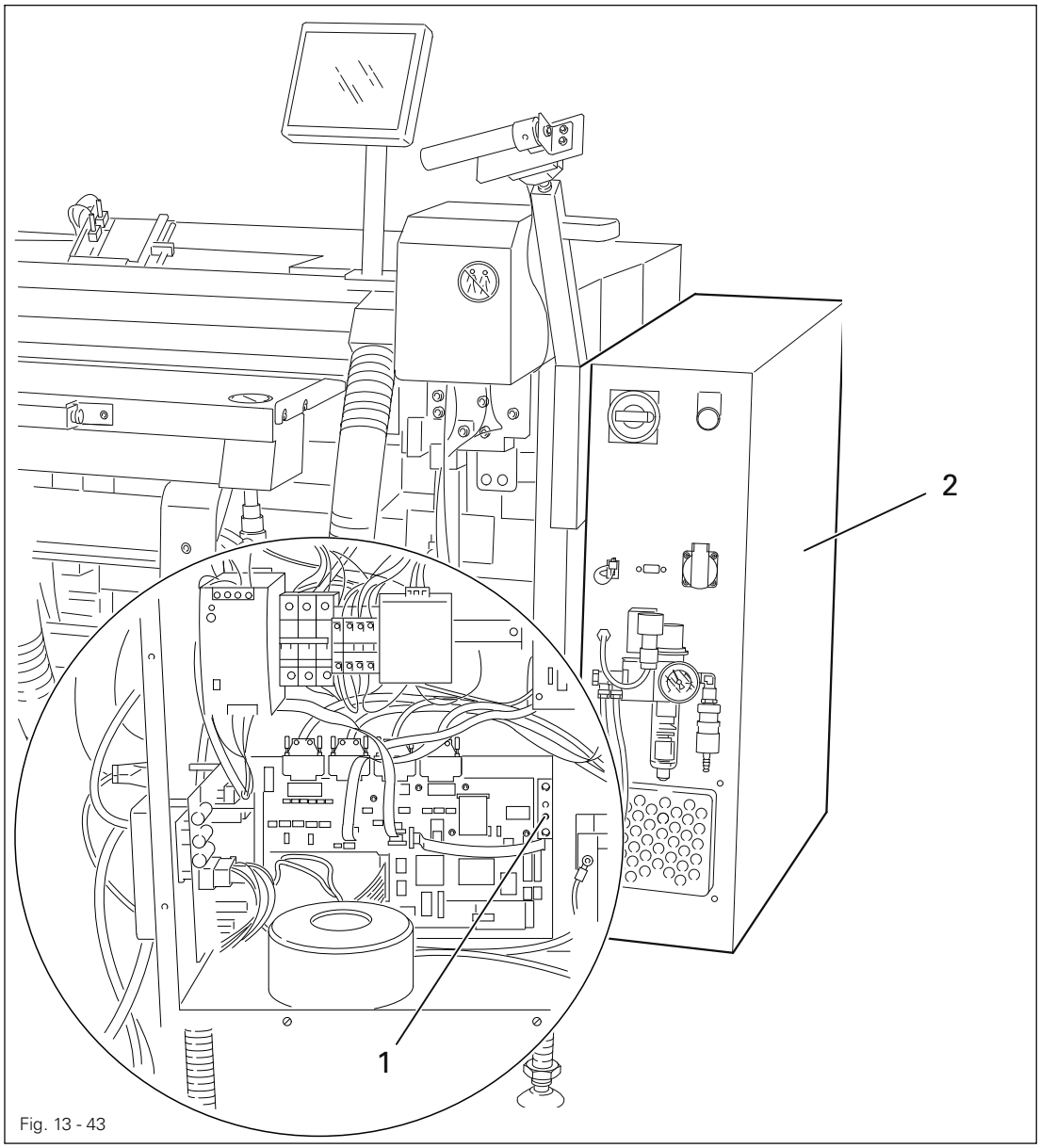

Fig. 13 - 43

Boot key **1** in control box **2** is used to boot the machine control unit, see Chapter **13.23.03 Loading / updating the operating program**.

13.23 Service menu

The status of the digital and analog inputs is displayed in the service menu. The outputs can be set or reset manually. In addition it is also possible to call up functions for carrying out a cold start, for the machine configuration, for loading the operating program and for setting the control panel.

- Switch on the machine.



- Call up the input mode.

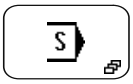

- Call up the service menu.

Control panel BDF T1

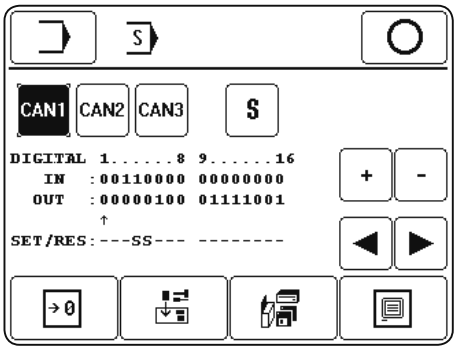

Control panel BDF P1

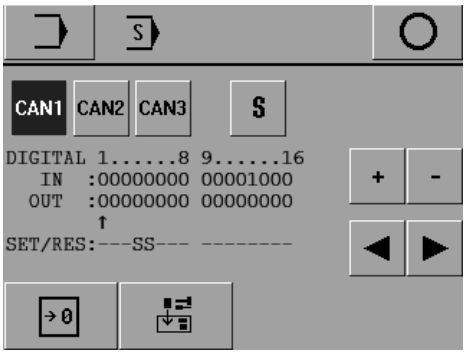

Explanation of the functions



Input mode
This function is used to change to the initial state of the input mode.



Conclude input
This function is used to conclude the input and change into the sewing mode.



Can-nodes
This function is used to select the required Can-node. The currently selected Can-node is shown as an inverse symbol.



Special outputs
This function is used to set or reset special outputs.

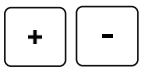

Plus/minus keys
These are used to set (+) or reset (-) the selected output.



Arrow keys
These are used to select the desired outputs.

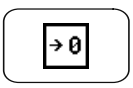

Cold start
This function is used to carry out a cold start, see Chapter 13.23.01 Cold start.

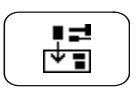

Machine configuration
This function calls up a menu for configuring the machine, see Chapter 13.23.02 Machine configuration.



Loading the operating program (only on machines with control panel BDF T1)
This function is used to load the machine operating program, see Chapter 13.23.03 Loading/ updating the operating program.



Control panel settings (only on machines with control panel BDF T1)
This function is used to call up a menu for changing the display contrast and for switching the key tone on or off, see Chapter 8.04 Setting the control panel.

13.23.01 Cold start

When a cold start is carried out, all newly created or altered programs, as well as all altered parameter settings are deleted!
The machine memory is deleted or set back to the status at the time of delivery.



- Switch on the machine and call up the input mode.

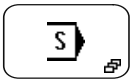

- Call up the service menu.

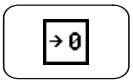

- Call up the cold start function.

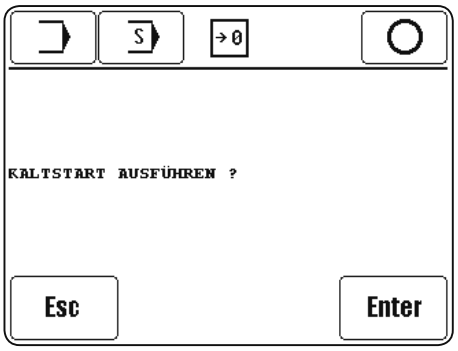



- Confirm that a cold start is to be carried out.

Explanation of further functions



Input mode
This function is used to change to the initial state of the input mode.

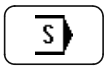

Service menu
This function is used to return to the service menu, see Chapter **13.23 Service menu**.



Conclude input
This function is used to conclude the input and change into the sewing mode.

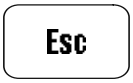

Esc
The input is interrupted.

13.23.02 Machine configuration

With the machine configuration function, the machine's control unit receives the necessary information about the installed components. Whenever the machine components are altered, the machine configuration must be adapted accordingly.



- Switch on the machine and call up the input mode.

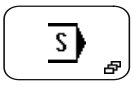

- Call up the service menu.

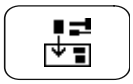

- Call up the menu for entering the machine configuration.

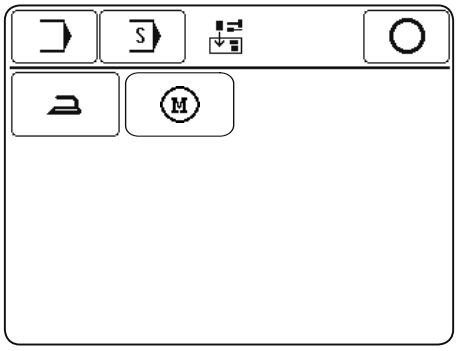

Explanation of the functions



Input mode
This function is used to change to the initial state of the input mode.

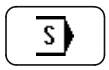

Service menu
This function is used to return to the service menu, see Chapter 13.23 Service menu.



Conclude input
This function is used to conclude the input and change into the sewing mode.



Loading unit for ironing compensation strips
This function is used to enter whether or not the optional loading unit for "ironing compensation strips is attached.

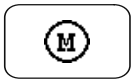

Vacuum motor
This function is used to confirm whether or not the optional vacuum motor is fitted.

13.23.03 Loading / updating the operating program

To boot a new machine software, a sd-card with the needed files has to be plugged in the sd-slot of the control panel.

During the loading of the operating program all data in the machine memory is deleted!

- Switch on the machine and push the button "FORCE UPDATE".

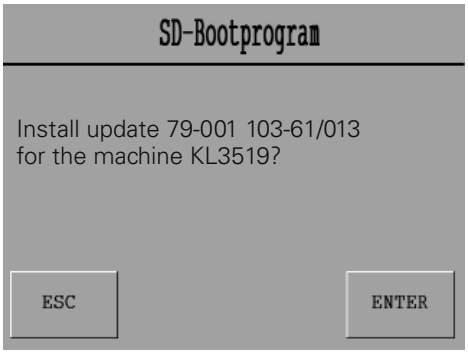

- Start the bootsequence with the key "ENTER".

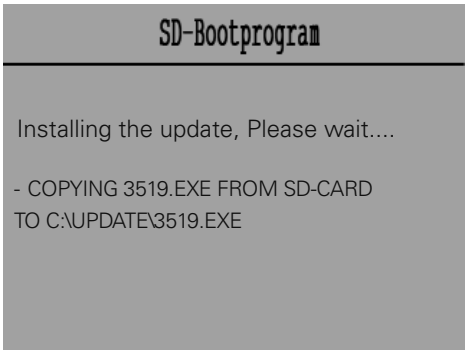

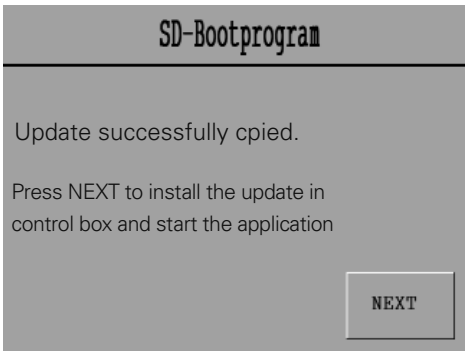

- To install the software, push the key "NEXT".

13.24 Sewing motor menu

In this menu the sewing motor functions are tested and the t.d.c. needle position is set.

- Switch on the machine.



- Call up the input mode.

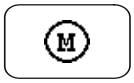

- Call up the sewing motor menu.

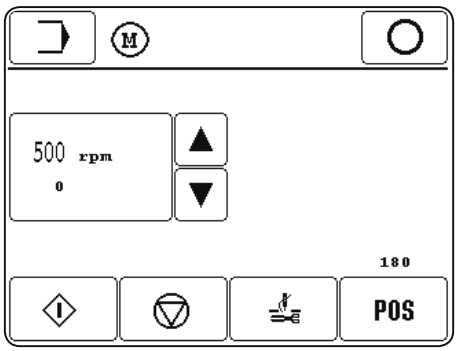

Explanation of the functions



Input mode
This function is used to change to the initial state of the input mode.



Conclude input
This function is used to conclude the input and change into the sewing mode.



Sewing motor start
This function is used to start the sewing motor with the set speed.



Sewing motor stop
This function is used to stop the sewing motor again.



Thread trimming
This function is used to run the thread trimming cycle.

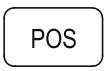

Needle function
The current actual position of the needle is displayed.
To set the t.d.c. position of the needle bar, bring the needle bar to the appropriate position by turning the balance wheel and take over this position by operating the "POS" key.

13.25 Parameter settings

All parameters which can be altered are shown in the list of parameters (Chapter **13.25.02).**
A description of how to select parameters and alter the values is given below.

13.25.01 Selecting and altering parameters.



- Switch on the machine and call up the input mode.



- Call up the parameter input function.

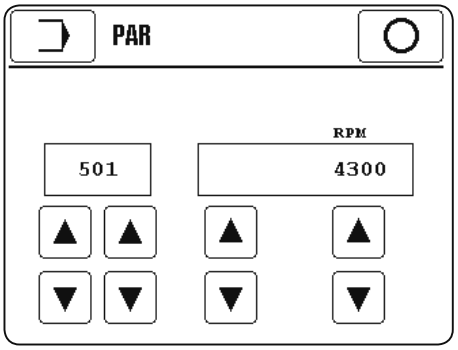

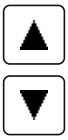

- Select the parameter separately by group (hundred figure) and parameter within the function group.

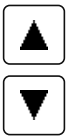

- Alter the value of the selected parameter.



- Quit parameter input function.

13.25.02 Parameter list

Group	Parameter	Description	Setting range	Set value
1	101	Bobbin thread monitor 0 = off; 1 = counter, 2 = sensor	0 - 2	1
	102	Bobbin thread reverse counter	0 - 999	100
	103	Needle thread monitor	ON - OFF	ON
	104	Fade-out stitches needle thread monitor The number of stitches, for which the needle thread monitor is not activated at the start, is changed.	0 - 99	5
	105	Reaction time needle / bobbin thread monitor The sensitivity of the needle thread monitor is changed (1 = quickest reaction, max. sensitivity)	1 - 9	1
	106	Cycle without positioning tube	ON - OFF	OFF
	107	Ironing compensation strip	ON - OFF	OFF
	108	Sewing off	ON - OFF	OFF
	109	Cycle without trimming	ON - OFF	OFF
	110	Sewing stop in case of needle thread fault	ON - OFF	OFF
	111	Remaining piece counter after reaction of bobbin thread sensor	0 - 500	20
	112	Continuous running / test function	ON - OFF	OFF
	113	Wiper 2 closed on left part	ON - OFF	OFF
	114	Loading clamp **2** (switching in cycle)	ON - OFF	OFF
	115	Automatic program number change with change right / left right = station key **0,** left = station key **1**	0 - 1	0
	116	Additional path in material clamp [**0.1** mm]	100 - 500	100
	117	Switch on vacuum table later	ON - OFF	OFF
	118	Tact marking laser	ON - OFF	ON
	119	Unitary material thickness in program groups		
	120	Assignment of material thickness to a program group 0 = material thickness group 0 [in 0,1 mm] 1 = material thickness group 1 [in 0,1 mm]		
	142	Key tone	ON - OFF	ON
2	201	Stitch length for start tacks (1 = standard stitch length; 2 = ½ standard stitch length)	1 - 2	1
	202	No. of stitches for start tacks	1 - 9	2

Group	Parameter	Description	Setting range	Set value
2	203	Stitch length for condensed start stitches [0.1 mm]	10 - 30	12
	204	No. of stitches for condensed start stitches	1 - 9	5
	205	Stitch length for condensed end stitches [0.1 mm]	10 - 30	12
	206	No. of stitches for condensed end stitches	1 - 9	4
	207	Seam end angle [°]	0 - 90	30
	208	No. of stitches for seam end angle	1 - 9	5
	209	Stitch length [0.1 mm]	10 - 30	20
	210	No. of trim stitches	1 - 5	2
	211	Correction value 1 for starting point of x-coordinates [0.1 mm]	-100 - 800	0
	212	Correction value 2 for starting point of x-coordinates [0.1 mm]	-100 - 800	0
	213	Select the starting point 0 = starting point 1 (Param. 211) 1 = starting point 2 (Param. 212)	0 - 1	0
	214	Correction for last stitch [0.1 mm]	-20 - +20	0
3	301	NIS (carriage start) [°]	80 - 150	110
	302	Take-up lever t.d.c. [°]	80 - 90	82
	303	Thread trimming position [°]	160 - 360	200
	304	Reversing position [°]	0 - take-up lever t.d.c.	17
	305	Thread tension position [°]	0 - 360	200
4	401	Delay time between "table forwards" and "table extension off" [0.01 s]	10 - 256	50
	402	Delay time "stacker down" [0.01 s]	10 - 256	56
	403	Time for tacting laser [0.01 s]	10 - 256	50
5	501	Maximum speed [spm]	500 - 4300	4300
	502	Bartack speed [spm]	500 - max. speed	max. speed
	503	Cutting speed [spm]	100 - 500	200
	504	Speed slow start stitches [spm]	500 - 2000	1000
	505	Slow start stitches	0 - 9	2

14 Control unit

14.01 Basic setting / Diagnosis / Pin assignment

14.01.01 Power unit A30

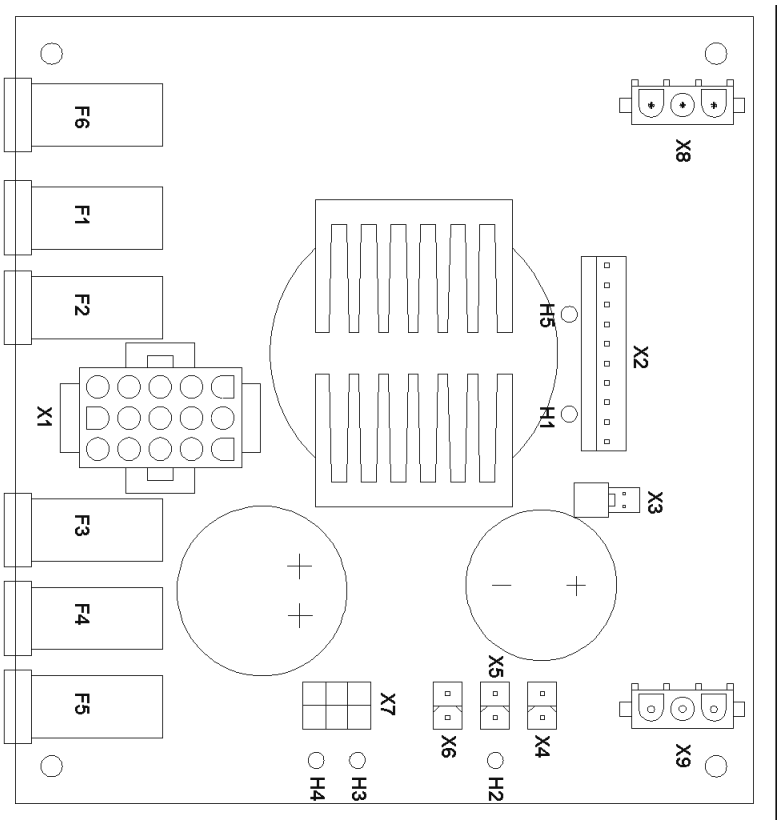

Voltage		Fuse		LED
Mains	230 V AC	F6	(6.3 A T)	-
Processor	5 V DC	F1	(2 A T)	H1
Control panel	18 V DC	F2	(500 mA T)	H5
I/O	24 V DC	F3	(2.5 A T)	H2
Stepping motor	80 V DC	F4	(6.3 A T)	H3
Stepping motor	24 V DC	F5	(500 mA T)	H4

Pin assignment

X 1 (transformer secondary)

PIN	Signal	PIN	Signal
3	V1 18 V AC 1	7	V4 57 V AC 1
9	V1 18 V AC M	13	V4 57 V AC M
6	V1 18 V AC 2	10	V4 57 V AC 2
12	V2 18 V AC	11	V5 18 V AC
15	V2 18 V AC	14	V5 18 V AC
2	V3 18 V AC 1	5	
4	V3 18 V AC M	8	
1	V3 18 V AC 2		

X2 (BS3)

PIN	Signal	PIN	Signal
1	GND 5 V	4	5 V
2	GND 5 V	5	5 V
3	GND 5 V	6	5 V
7	18 V AC	8	18 V AC
9	POWERF	10	V1 18 V

X 3 (Fan), X4, X5, X6

PIN	Signal	PIN	Signal
1	24 V (I/O)	2	GND 24 V

X 7 (sm-end phase)

PIN	Signal	PIN	Signal
1	24 V (SM)	4	GND 24 V (SM)
2	80 V (SM)	5	GND 80 V (SM)
3	80 V (SM)	6	GND 80 V (SM)

X 8 (Mains)

PIN	Signal	PIN	Signal
1	PE	2	N
3	L1		

X 9 (Transformer primary)

PIN	Signal	PIN	Signal
1	PE	2	N
3	L1		

14.01.02 Basic control unit A20

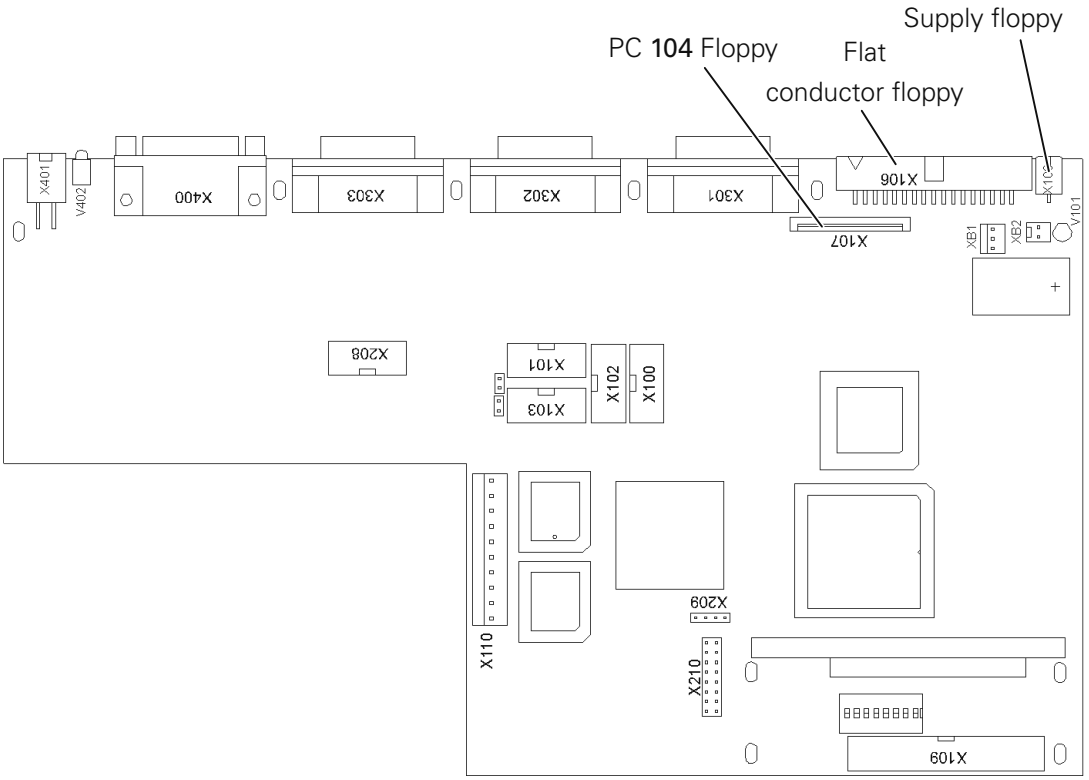

Pin assignment
X103 (COM1)
X101 (COM2)

PIN	Signal	PIN	Signal
1	Vterm1	6	
2	RxD	7	RTS
3	TxD	8	CTS
4		9	Vterm2
5	GND		

X301 (X-axis / motor 1)
X302 (Y-axis / motor 2))

PIN	Signal	PIN	Signal
1	Pulse +	9	Pulse -
2	Direction +	10	Direction -
3	Gate/Enable +	11	Gate/Enable -
4	Current control +	12	Current control -
5	Vex +	13	Vex -
6			
7	Input2 +	14	Input2 -
8	Input1 +	15	Input1 -

X208 (CAN-Bus)

PIN	Signal	PIN	Signal
1	P8HA +	6	
2	P8HA -	7	
3	DoRi +	8	DoRi -
4	GND	9	GND
5			

X400 (main drive)

PIN	Signal	PIN	Signal
1	Screening	14	A_A
2	TxD_A	15	A_B
3	RxD_A	16	B_A
4	TxD_B	17	B_B
5	RxD_B	18	I_A
6		19	I_B
7	GND	20	GND
8		21	A_OC
9	R1_A	22	B_OC
10	R1_B	23	I_OC
11	R2_A	24	V2
12	R2_B	25	GND
13	GND	26	Vex

X401 ((thread monitor)

PIN	Signal	PIN	Signal
1	+U_ULN	2	+U_ULN
3	POUT7	4	POUT8

14.01.03 Sewing drive A22

Before leaving the factory the sewing drive controller is equipped with the necessary operating software. This software may only be replaced by appropriately trained personnel.

The LED "Power on" shows that the unit is ready for operation. Diagnosis functions and fuses are not available. If error messages appear on the machine display, see Chapter **14.02.04** Error in sewing drive

Pin assignment

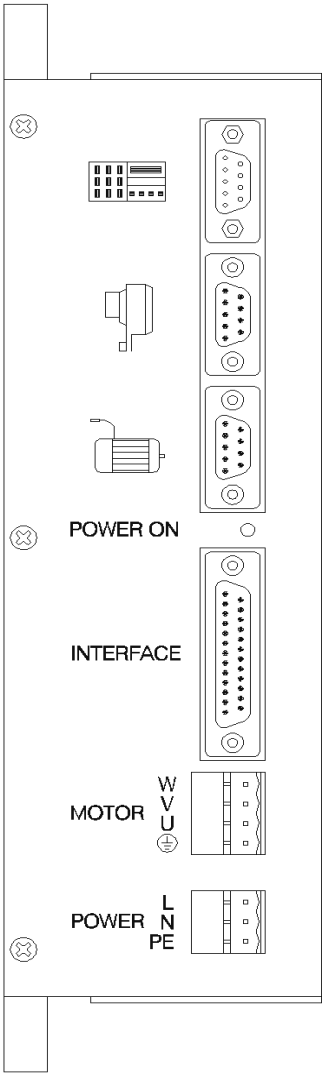

X2 (Synchronizer)

PIN	Signal	PIN	Signal
1	KA	6	
2	KB	7	
3	KC	8	
4	ADTC2	9	GND
5	+ 5V		

X3 (Interface)

PIN	Signal	PIN	Signal
1	GND	14	A
2	TxD	15	A\
3	RxD	16	B
4	TxD\	17	B\
5	RxD\	18	Index
6		19	Index\
7	GND	20	
8		21	
9	REF1	22	
10	REF1\	23	
11	REF2	24	
12	REF2\	25	
13	GND	26	

X6 (Mains)

PIN	Signal	PIN	Signal
1	PE	2	N
3	L1		

X14 (Motor)

PIN	Signal	PIN	Signal
1	PE	3	V
2	U	4	W

14.01.04 Stepping motor drive

The stepping motor controller has the following initial setting:
Motor 1: 6 A, SIN 4
Motor 2: 6 A, SIN 4
Current reduction 30 %, with coupling of motor 1 and motor 2
These settings are loaded. Software number: **79-001 358-91/002**

For information about LED status indications see Chapter **14.02.05 Errors - Stepping motor drive**.

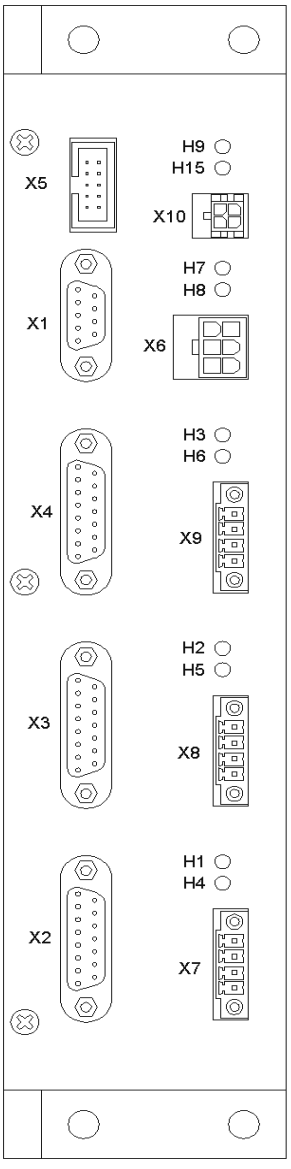

PIN assignment

X5 (Bootstrap)

PIN	Signal	PIN	Signal
1	GND	2	BOOTSTRAP
3	RESIN\	4	n.c.
5	TxD	6	RxD
7	12 Vin	8	Vpp Processor
9	5 V	10	n.c.

X10 (carriage control)

PIN	Signal	PIN	Signal
1	12 V	3	GND
2	Schalter	4	n.c.

X1 (CAN-Bus)

PIN	Signal	PIN	Signal
1		6	
2		7	
3	DoRi +	8	DoRi -
4	GND	9	GND
5			

X6 (supply)

PIN	Signal	PIN	Signal
1	+24 VSM	4	GND 24 VSM
2	+80 VSM	5	GND 80 VSM
3	+80 VSM	6	GND 80 VSM

X2, X3, X4 (Drive motor **1** to **3**3)

PIN	Signal	PIN	Signal
1	Pulse +	9	Pulse -
2	Direction +	10	Direction -
3	Gate/Enable +	11	Gate/Enable -
4	Current control +	12	Current control -
5	n.c.	13	n.c.
6	n.c.	14	Ausgang - (frei)
7	Output + (not assigned)	15	Ready -
8	Ready +		

X7, X8, X9 (motor connection motor **1** to **3**

PIN	Signal
1	Coil 1
2	Coil 1
3	Coil 2
4	Coil 2

14.01.05 CAN node A10, A11, A12

The CAN node has following basic setting:

adress (**A 10** S200) = **1,** (**A 11** S200) = 2, (**A 12** S200) = 3

Pin assignment

X300 (outputs)

PIN	Signal	PIN	Signal
1	OUT2	19	GND
2	OUT1	20	GND
3	OUT4	21	GND
4	OUT3	22	GND
5	OUT6	23	GND
6	OUT5	24	GND
7	OUT8	25	GND
8	OUT7	26	GND
9	OUT10	27	GND
10	OUT9	28	GND
11	OUT12	29	GND
12	OUT11	30	GND
13	OUT14	31	GND
14	OUT13	32	GND
15	OUT16	33	GND
16	OUT15	34	GND
17			
18			

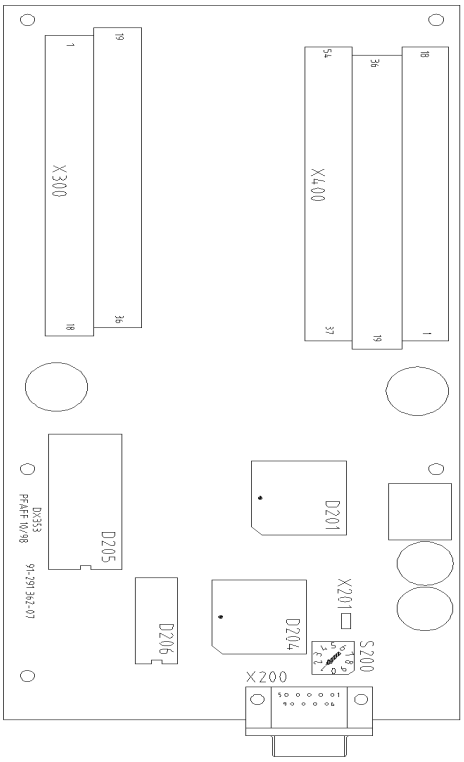

X300 (Inputs)

PIN	Signal	PIN	Signal	PIN	Signal
1		19			
2		20			
3	IN1	21	GND	39	24 V
4	IN2	22	GND	40	24 V
5	IN3	23	GND	41	24 V
6	IN4	24	GND	42	24 V
7	IN5	25	GND	43	24 V
8	IN6	26	GND	44	24 V
9	IN7	27	GND	45	24 V
10	IN8	28	GND	46	24 V
11	IN9	29	GND	47	24 V
12	IN10	30	GND	48	24 V
13	IN11	31	GND	49	24 V
14	IN12	32	GND	50	24 V
15	IN13	33	GND	51	24 V
16	IN14	34	GND	52	24 V
17	IN15	35	GND	53	24 V
18	IN16	36	GND	54	24 V

X200 CAN-Bus)

PIN	Signal	PIN	Signal
1	P8HA +	6	
2	P8HA -	7	
3	D0Ri +	8	DoRi -
4	GND	9	GND
5			

14.02 Description of the error messages

14.02.01 General errors

Display	Description
ERROR: 3	Error in allocation EMS memory
ERROR: 4	C167 not reacting
ERROR: 5	Boot file (c167boot.bin) cannot be opened
ERROR: 6	Error in flash-programming
ERROR: 7	Error when opening a file
ERROR: 8	Battery
ERROR: 9	Firmware version conflict
ERROR: 10	CAN-error (reset)
ERROR: 11	CAN-error (no. of nodes)
ERROR: 12	Communication main drive
ERROR : OPERATING DATA CHECK SUM (COLD START CARRIED OUT)	Operating data check sum
NEW OPERATING SOFT-WARE (COLD START CAR-RIED OUT)	New operating software
COLD START CARRIED OUT	Cold start
ERROR: 101	C167-error
ERROR: 102 (#node no.)(status)	CAN-error, status = Bit1 – node inactive, Bit 8 – short circuit,
ERROR: 103	End stage SmX
ERROR: 104	End stage SmY
ERROR: 105	Error compressed air
ERROR: 106	Error loading clamp open
ERROR: 201 (#sewing motor error)	Sewing motor error see Chapter **14.02.04 Sewing motor error**
ERROR: 202 (cause)	Running function locked
ERROR: 203 (cause)	Running function at zero point locked
ERROR: 204 (cause)	Sewing function locked
ERROR: 205 (cause)	Level control function locked
ERROR: 210	Command byte of NM-interface not free, command could not be given
ERROR: 211	Coordinates outside sewing area
ERROR: 212	Stitch length too long
ERROR: 213	Zero point not found
ERROR: 214	No carriage start, NIS

Display	Description
ERROR: 215	Ramp not completed
ERROR: 216	Material does not reach clamp
ERROR: 217	Needle thread error
ERROR: 241 (#sewing motor error)	Sewing motor error see Chapter **14.02.04 Sewing motor error**
ERROR: 242	Remove material
ERROR: 281	Remove material, material not in clamp
ERROR: 282	Stacker full
ERROR: 283	Needle thread error
ERROR: 284	Bobbin thread error
ERROR: 301	Program too large
ERROR: 302	Contradiction between progpar and progload
ERROR: 303	Flash read error or progr. defect
ERROR: 304	Memory overflow
ERROR: 305	Invalid configuration
ERROR: 306	Needle zero point invalid
ERROR: 310	File not on source
ERROR: 311	Source reading error, file cannot be opened
ERROR: 312	Target write error, file cannot be opened
ERROR: 313	Source reading error
ERROR: 314	Target write error
ERROR: 315	File configuration cannot be opened
ERROR: 316	Error when opening MDAT-file
ERROR: 317	Write error in MDAT-file
ERROR: 318	Machine data identification incorrect
ERROR: 319	Read error in MDAT-file
ERROR: 320	Prog. with incorrect machine class
ERROR: 321	Prog. with incorrect machine version
ERROR: 322	Prog. with incorrect data set version
ERROR: 323	Incorrect program number
ERROR: 324	No carriage start, NIS
ERROR: 330 (#stitch generation error) (#program number)	Stitch generation error, see Chapter **14.02.03 Stitch generation error**
ERROR: 341 (#sewing motor error)	Sewing motor error, see Chapter **14.02.04 Sewing motor error**
PROGRAM XX NOT IN MEMORY	Program XX does not exist
ERROR: 401	Text file cannot be opened

Display	Description
ERROR: 402	Error when reading text file
ERROR: 403	Error in allocation of storage space for texts
ERROR: 501	Error when opening file "pikto.hex" or "vorlagen.hex"
ERROR: 502	No ACK from control panel

14.02.02 CAN-Error

Error byte	Description
bit7	End stage error (short circuit)
bit6	-
bit5	-
bit4	Receive status (waiting for input object)
bit3	Transmit status (transmit output object)
bit2	Transmit status
bit1	Node time out
bit0	Node active

14.02.03 Stitch generation error

Display	Description
1	Start backtack too large
2	Start backtack too large
3	Start condensed stitches too large
4	Incorrect tack type
5	Tack length >6mm
11	x-coord. > xsewing area_max
12	x-coord. < xsewing area_min
13	y-coord. > xsewing area_max
14	y-coord. < xsewing area_min
15	Tack starting point is over L2 and ARSZ < 2

14.02.04 Sewing motor error

Display	Description
1	Transmission error
2	Timeout serial interface
3	Check sum error in incoming data
4	Timeout command
30h (48)	Timeout-slave expired (command string incomplete)
31h (49)	Incorrect command code
32h 50)	Framing or parity err or
33h (51)	Check sum incorrect
34h (52)	Incorrect date request
35h (53)	No parameter programmable (motor operation)
36h (54)	Parameter does not exist
37h (55)	Incorrect parameter value
38h (56)	EEPROM being programmed
39h (57)	Incorrect machine speed
3Ah (58)	Incorrect position
3Bh: (59)	Path for guided positioning too short
3Ch: (60)	Reset of position counter not possible (motor running)
3Dh: (61)	Turning to tdc after mains on not permitted
3Eh: (62)	SYMA not recognized
3Fh: (63)	Target position < 3 incr. away from count position
40h - 4Fh –	
50h: (80)	Network control (failure of 2 network half waves)
51h: (81)	Error power electronics during initialization
52h: (82)	Short circuit in motor
53h: (83)	Mains voltage off recognized
54h: 84)	Error power electronics in operation
55h: (85)	No increments
56h: (86)	Motor blocked
57h: (87)	Commutation transmitter connector missing
58h: (88)	Increment transmitter connector missing
59h: (89)	Fault in motor running (target speed not reached)
5Ah: (90)	-
5Bh: (91)	Regulating algorithm blocked
5Ch - 69h	
6 Ah: (106)	EEPROM not programmable
6 Bh: (107	EEPROM missing
6 Ch: (108)	Master reset carried out
6 Dh: (109)	-
6 Eh: (110)	Residual path for path-controlled, guided delay ramp too short
6 Fh: (111)	Slave has received 5 successive garbled messages
70h: (112)	Time-out over
71h - FFh -	

14.02.05 Errors – Stepping motor drive

If problems occur with the stepping motor drive during the operation, an error might have occurred in the stepping motor controller.
The error message is indicated by LEDs on the stepping motor controller.

LED	Meaning
H 9 (red)	Temperature too high in end phase
H 15 (red)	End phase ready
H 7 (red)	80 V supply > 88 V
H 8 (red)	80 V supply < 36 V
H 3 (green)	motor 3 ready
H 6 (red)	excess current motor 3
H 2 (green)	motor 2 ready
H 5 (red)	excess current motor 2
H 1 (green)	motor 1 ready
H 4 (red)	excess current motor 1

14.03 List of outputs and inputs

14.03.01 CAN-Nodes 1

Output	Term	Function	Remark
OUT1	Y1	Thread trimming on	Valve
OUT2	Y2	Vacuum positioning tube on	Valve
OUT3	Y3	Vacuum table on	Valve
OUT4	Y4	Workholder bar down	Valve
OUT5	Y5	Workholder bar up	Valve
OUT6	Y6	Cloth plate forwards	Valve
OUT7	Y7	Top clamp closed	Valve
OUT8	Y8	Disengage bottom clamp	Valve
OUT9	Y9	Clamp clutch on	Valve
OUT10	Y10	Clamp feed unit to right	Valve
OUT11	Y11	Clamp feed unit to left	Valve
OUT12	Y12	Stacker table up	Valve
OUT13	Y13	Needle thread tension off	Valve
OUT14	Y14	Wiper 3 off	Valve
OUT15	Y15	Wiper 3 on (up)	Valve
OUT16	Y24	Low pressure reduction on	Valve

Input	Term	Function
IN1	E4	Workholder bar up
IN2	not assigned	Presser foot up
IN3	E6	Cloth plate forwards
IN4	E10	Clamp feed right
IN5	E10A	Clamp feed centre
IN6	E11	Clamp feed left
IN7	E12	Stacker table down
IN8	E15	Wiper 3 up
IN9	E50	Basic position X-axis
IN10	E51	Basic position Y-axis
IN11	E52	Needle thread error
IN12	E53	Bobbin thread error
IN13	E54	Material in clamp
IN14		
IN15		
IN16		

14.03.02 CAN-Nodes 2

Output	Term	Function	Remark
OUT1	K16	Knife on	Contactor
OUT2	Y17	Wiper 2 off	Valve
OUT3	Y23	Wiper 1 off	Valve
OUT4	bobres	Reset for bobbin thread monitor (active low)	Dig. signal
OUT5	Y18	Loading clamp 1 off	Valve
OUT6	Y19	Loading clamp 2 off	Valve
OUT7	Y20	Catcher back, engage stationary knife	Valve
OUT8	Y21	Engage catcher	Valve
OUT9	Y22	Turn-up limit on	Valve
OUT10	Y40	Cutter down (Ironing compensation strip) *** optional ***	Valve
OUT11	Y41	Slide back (Ironing compensation strip) *** optional ***	Valve
OUT12	Y42	Slide open (Ironing compensation strip) *** optional ***	Valve
OUT13	Y43	Blast air (Ironing compensation strip) *** optional ***	Valve
OUT14	H13_14	Lamps double start keys	Lamps
OUT15	laser	marking laser on	dig. Signal
OUT16			

Input	Term	Function
IN1	E18	Loading clamp 1 open
IN2	E19	Loading clamp 2 open
IN3	E40	Cutter up (Ironing compensation strip) ***optional***
IN4	E41U1	Slide back (Ironing compensation strip) ***optional***
IN5	E41U2	Slide forwards (Ironing compensation strip) ***optional***
IN6		
IN7	E55	Loading clamp retracted
IN8	E56	Loading clamp closed
IN9	E57	Compressed air O.K.
IN10	E58	Foot switch vacuum
IN11	E59	Key switch
IN12	E60	Double start key 1
IN13	E61	Double start key 2
IN14		
IN15		
IN16		

14.03.03 CAN-Nodes 3

Output	Term	Function	Remark
OUT1	Y27U1	Positioning tube cylinder 1 down (vertical)	Pulse valve
OUT2	Y27U2	Positioning tube cylinder 1 up (vertikal)	Pulse valve
OUT3	Y28U1	Positioning tube cylinder 2 down (vertikal)	Pulse valve
OUT4	Y28U2	Positioning tube cylinder 2 up (vertikal)	Pulse valve
OUT5	Y29U1	Loading table lift 1 back	Pulse valve
OUT6	Y29U2	Loading table lift 1 forwards	Pulse valve
OUT7	Y30U1	Loading table lift 2 end positions	Pulse valve
OUT8	Y30U2	Loading table lift 2 special position	Pulse valve
OUT9	Y31U1	Positioning tube cylinder 1 back (horizontal)	Pulse valve
OUT10	Y31U2	Positioning tube cylinder 1 forwards	Pulse valve
OUT11	Y32U1	Positioning tube cylinder 2 back (horizontal)	Pulse valve
OUT12	Y32U2	Positioning tube cylinder 2 forwards (horizontal)	Pulse valve
OUT13	Y33	Needles forward	Valve
OUT14	Y34	Turn-up back	Valve
OUT15	Y35	Loading table extension in	Valve
OUT16	Y36	Spreader forwards	Valve

Input	Term	Function
IN1	E27U1	Positioning tube down
IN2	E27U2	Positioning tube up
IN3	E28	Positioning tube centre (vertical)
IN4	E29U1	Loading table lift 1 back
IN5	E29U2	Loading table lift 1 forwards
IN6	E31U1	Positioning tube back
IN7	E31U2	Positioning tube forwards
IN8	E32	Positioning tube centre (horizontal)
IN9	E33	Needles back
IN10	E34U1	Turn up back
IN11	E34U2	Turn up forwards
IN12	E36	Spreader back
IN13		
IN14	E38	Table position workholder bar
IN15		
IN16		

14.03.04 Special outputs

Term	Function	Remark
S1	Positioning tube down	
S2	Positioning tube up	
S3	Positioning tube centre vertical	
S4	Loading table back	
S5	Loading table forwards	
S6	Loading table special position	
S7	Positioning tube back	
S8	Positioning tube forwards	
S9	Positioning tube centre horizontal	
S10	Workholder bar down without pressure	
S11	Workholder bar down with pressure	
S12	Workholder bar up	

15 Pneumatic system circuit diagram

The pneumatics plan is illustrated in the basic position (Home-Position). Power (air and electricity) is connected. The components have a fixed status.

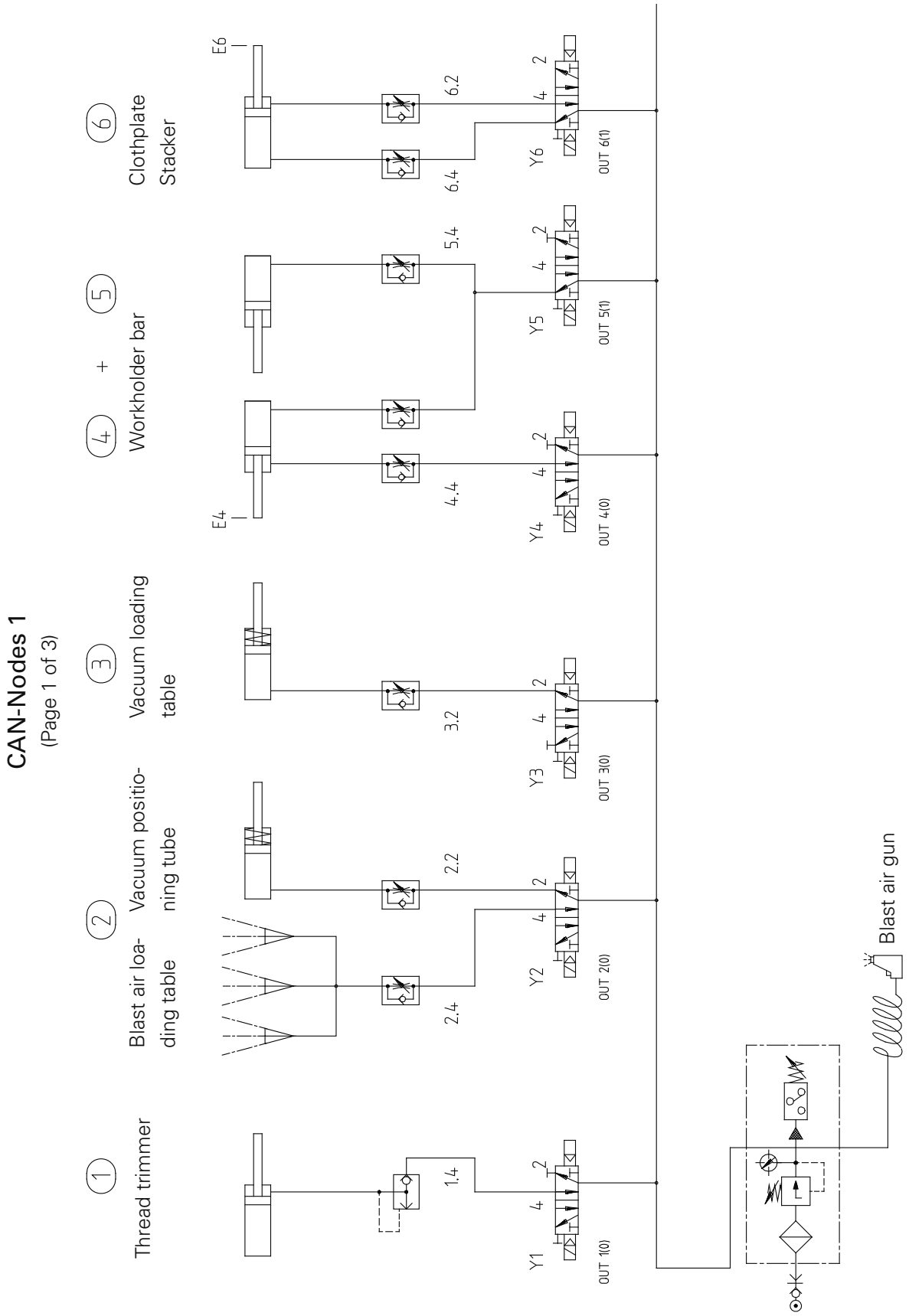

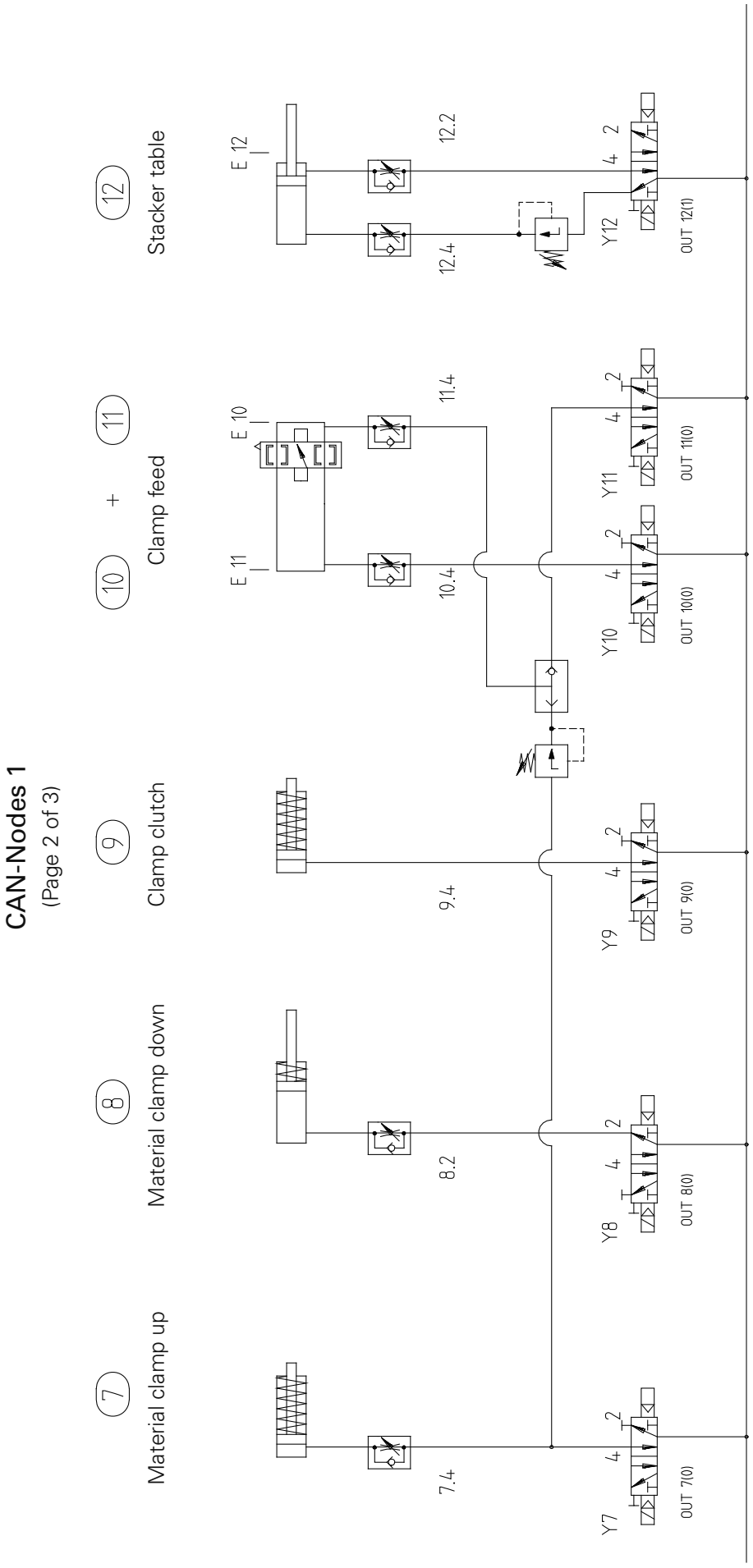
CAN-Nodes 1
(Page 2 of 3)
7
Material clamp up
8
Material clamp down
9
Clamp clutch
10
+
11
Clamp feed
12
Stacker table
E 10
E 11
E 12
7.4
8.2
9.4
10.4
11.4
12.2
12.4
Y7
Y8
Y9
Y10
Y11
Y12
OUT 7(0)
OUT 8(0)
OUT 9(0)
OUT 10(0)
OUT 11(0)
OUT 12(1)

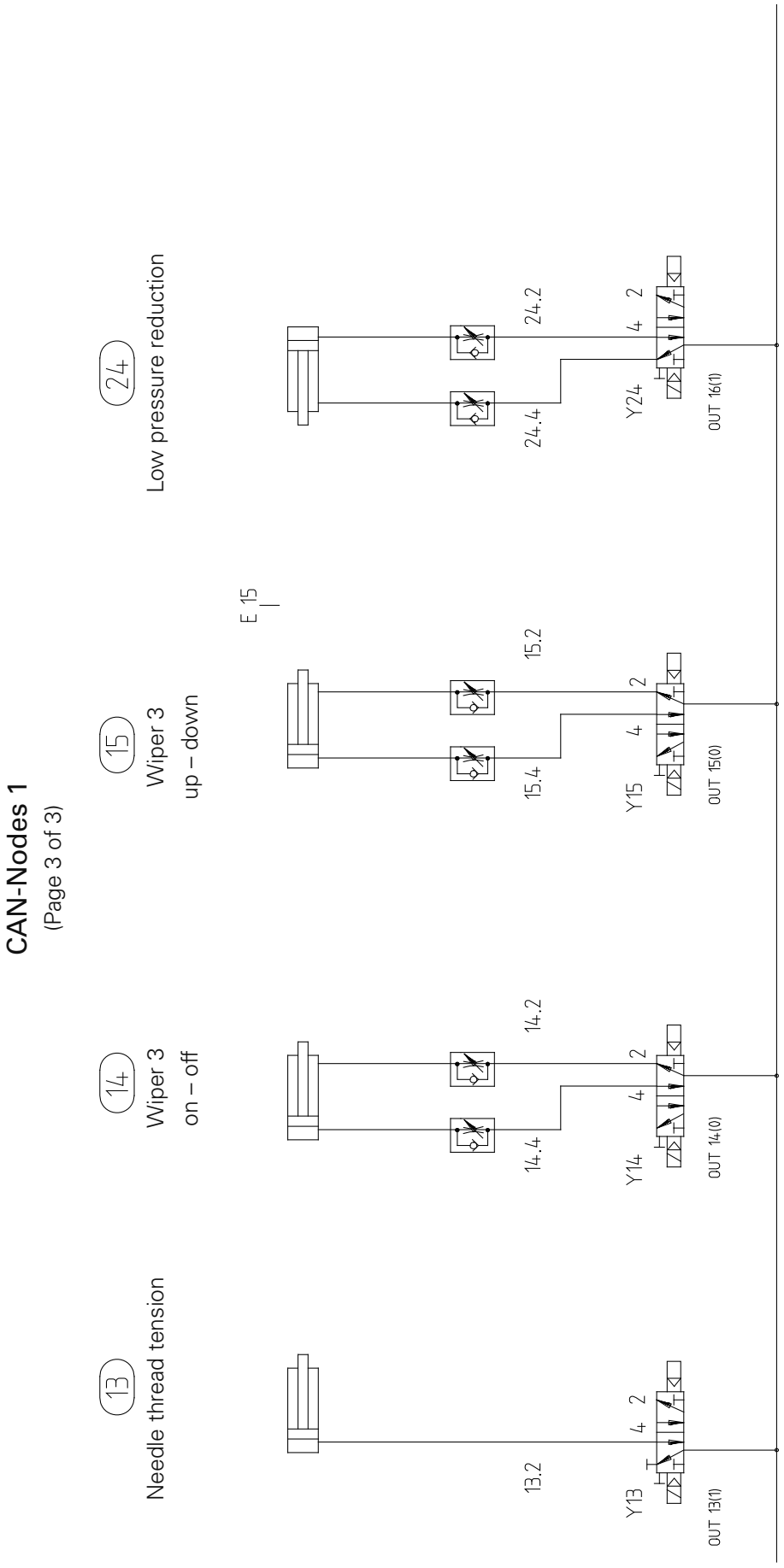
CAN-Nodes 1
(Page 3 of 3)
13
Needle thread tension
14
Wiper 3
on – off
15
Wiper 3
up – down
24
Low pressure reduction
E 15
13.2
Y13
OUT 13(1)
14.4
14.2
Y14
OUT 14(0)
15.4
15.2
Y15
OUT 15(0)
24.4
24.2
Y24
OUT 16(1)
4 2

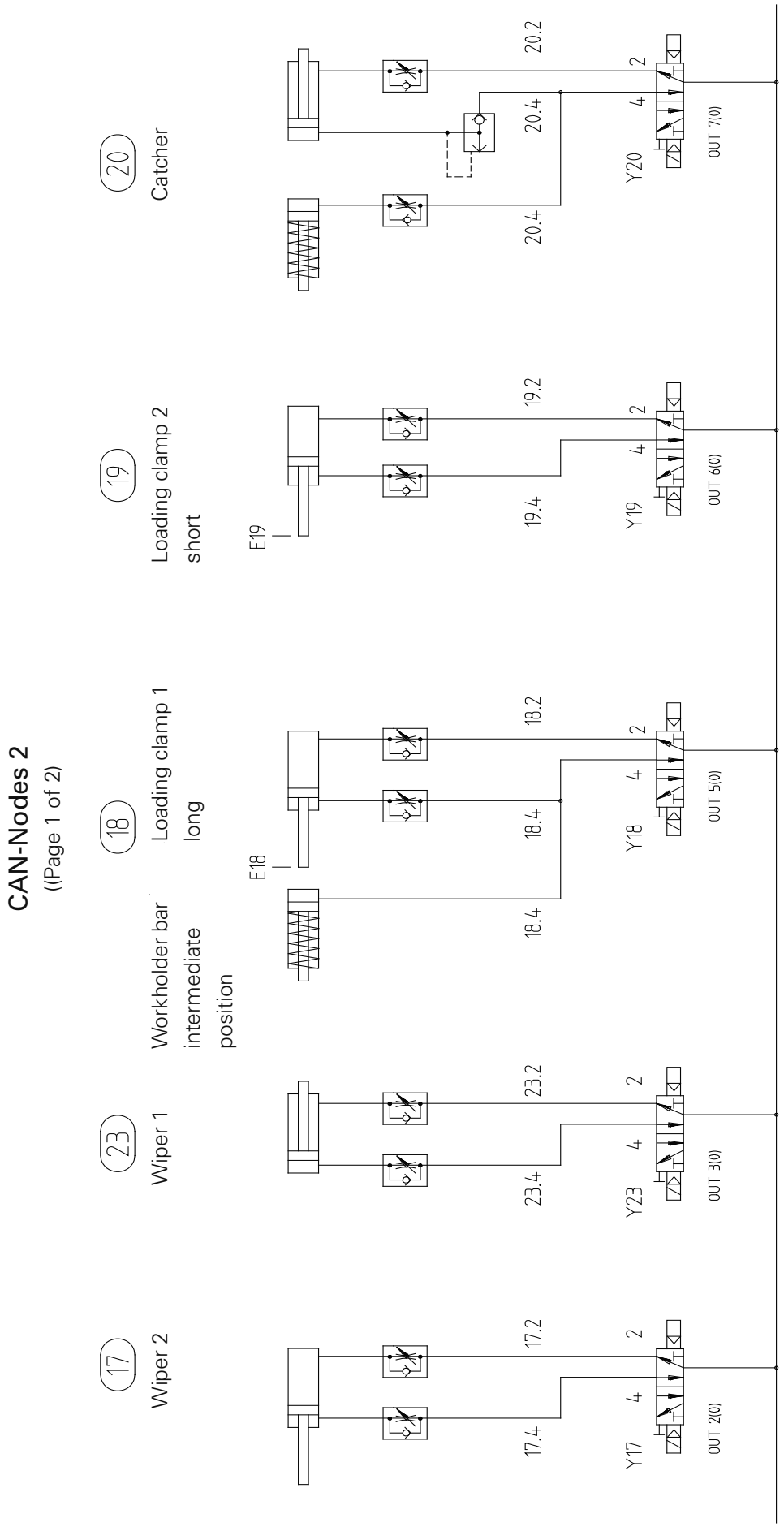
CAN-Nodes 2
((Page 1 of 2)
17
Wiper 2
23
Wiper 1
18
Workholder bar intermediate position
Loading clamp 1 long
19
Loading clamp 2 short
20
Catcher
E18
E19
17.2
17.4
23.2
23.4
18.2
18.4
18.4
19.2
19.4
20.2
20.4
20.4
Y17
Y23
Y18
Y19
Y20
4
2
OUT 2(0)
OUT 3(0)
OUT 5(0)
OUT 6(0)
OUT 7(0)

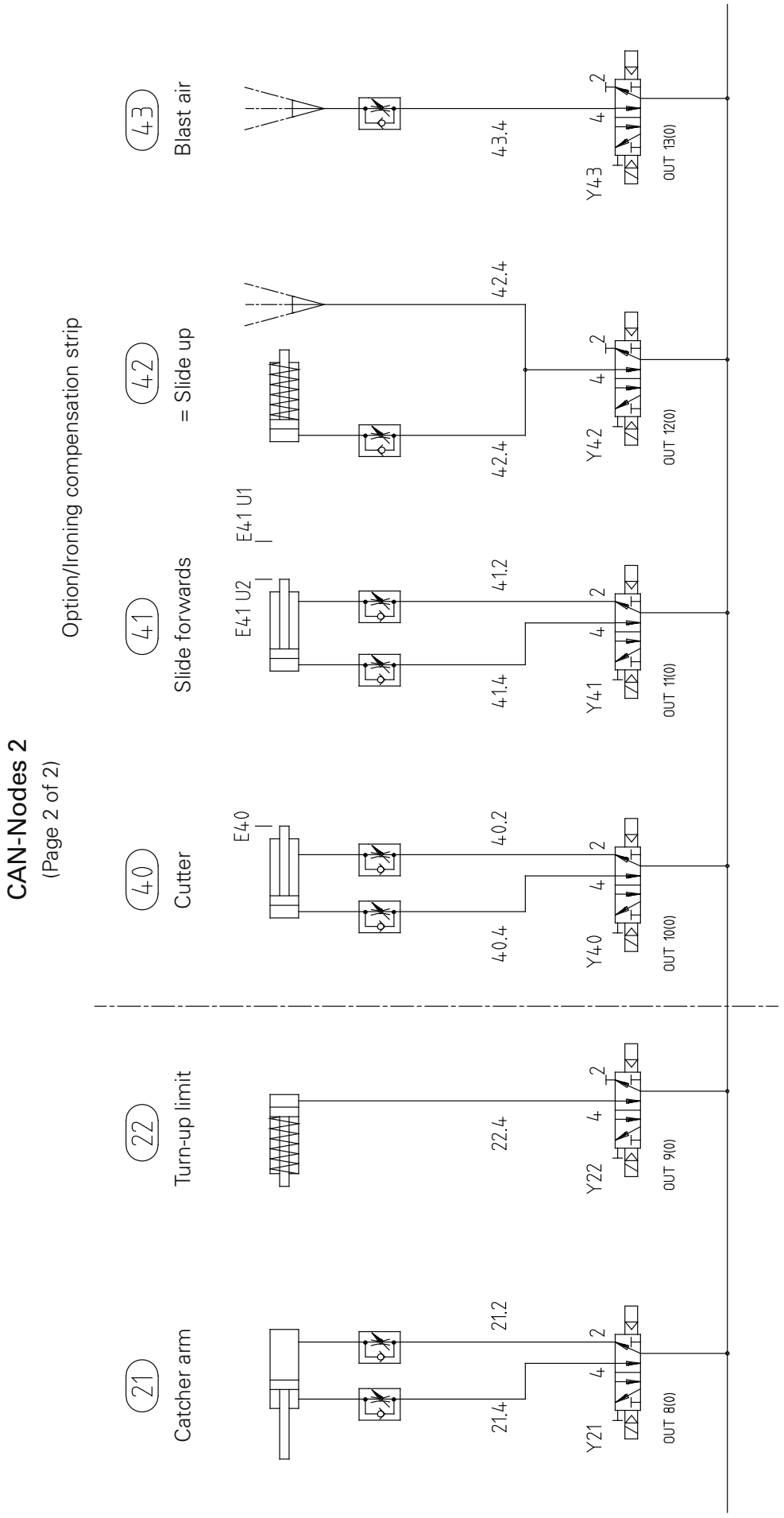
CAN-Nodes 2
(Page 2 of 2)
Option/Ironing compensation strip
21
Catcher arm
22
Turn-up limit
40
Cutter
41
Slide forwards
42
= Slide up
43
Blast air
E40
E41 U2
E41 U1
21.2
21.4
22.4
40.2
40.4
41.2
41.4
42.4
42.4
43.4
Y'21
Y'22
Y40
Y41
Y42
Y43
OUT 8(0)
OUT 9(0)
OUT 10(0)
OUT 11(0)
OUT 12(0)
OUT 13(0)

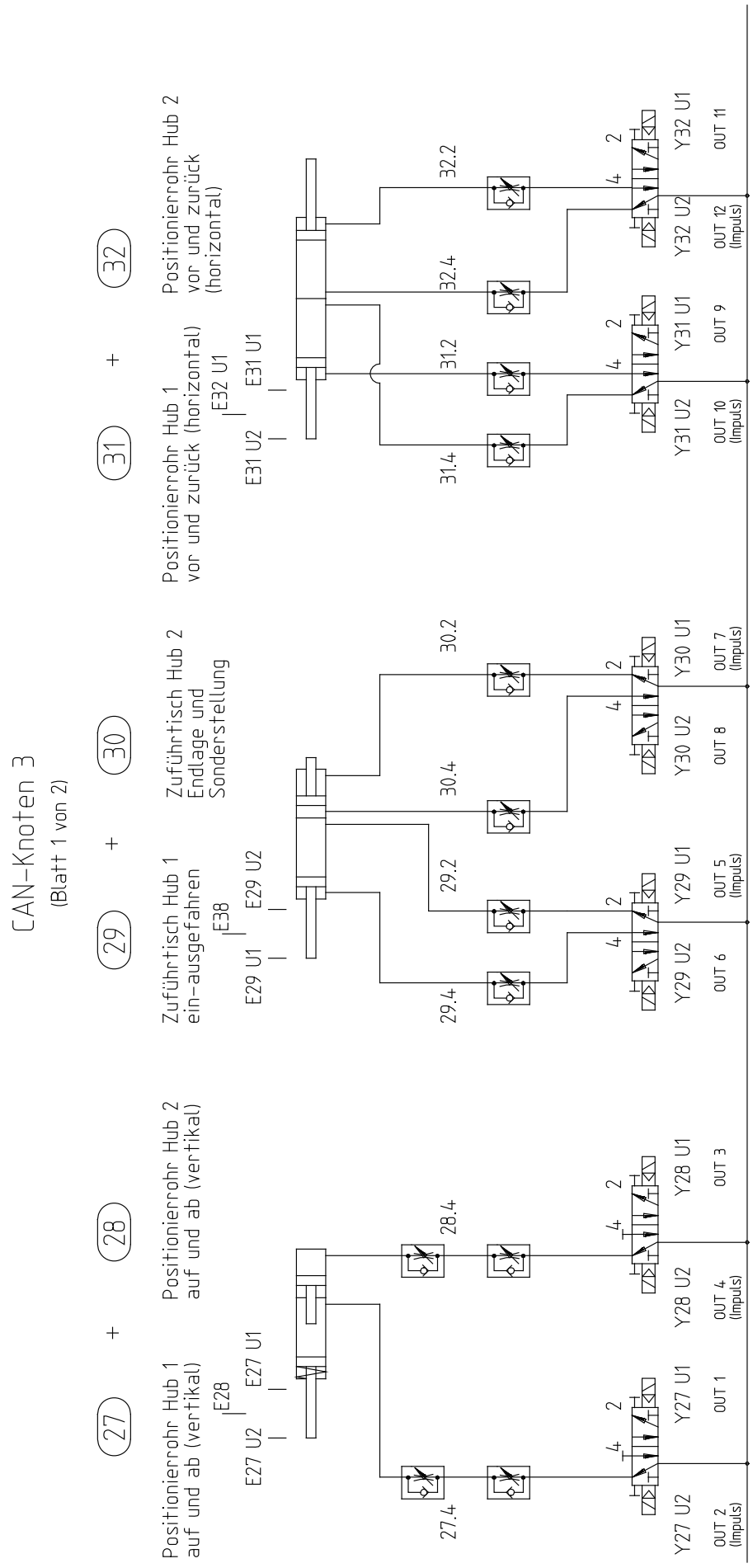
CAN-Knoten 3
(Blatt 1 von 2)
27 + 28 + 29 + 30 + 31 + 32
Positionierrohr Hub 1 auf und ab (vertikal)
Positionierrohr Hub 2 auf und ab (vertikal)
Zuführtisch Hub 1 ein-ausgefahren
Zuführtisch Hub 2 Endlage und Sonderstellung
Positionierrohr Hub 1 vor und zurück (horizontal)
Positionierrohr Hub 2 vor und zurück (horizontal)
E28
E27 U2
E27 U1
E38
E29 U1
E29 U2
E32 U1
E31 U2
E31 U1
27.4
28.4
29.4
29.2
30.4
30.2
31.4
31.2
32.4
32.2
Y27 U2
OUT 2 (Impuls)
Y27 U1
OUT 1
Y28 U2
OUT 4 (Impuls)
Y28 U1
OUT 3
Y29 U2
OUT 6
Y29 U1
OUT 5 (Impuls)
Y30 U2
OUT 8
Y30 U1
OUT 7 (Impuls)
Y31 U2
OUT 10 (Impuls)
Y31 U1
OUT 9
Y32 U2
OUT 12 (Impuls)
Y32 U1
OUT 11

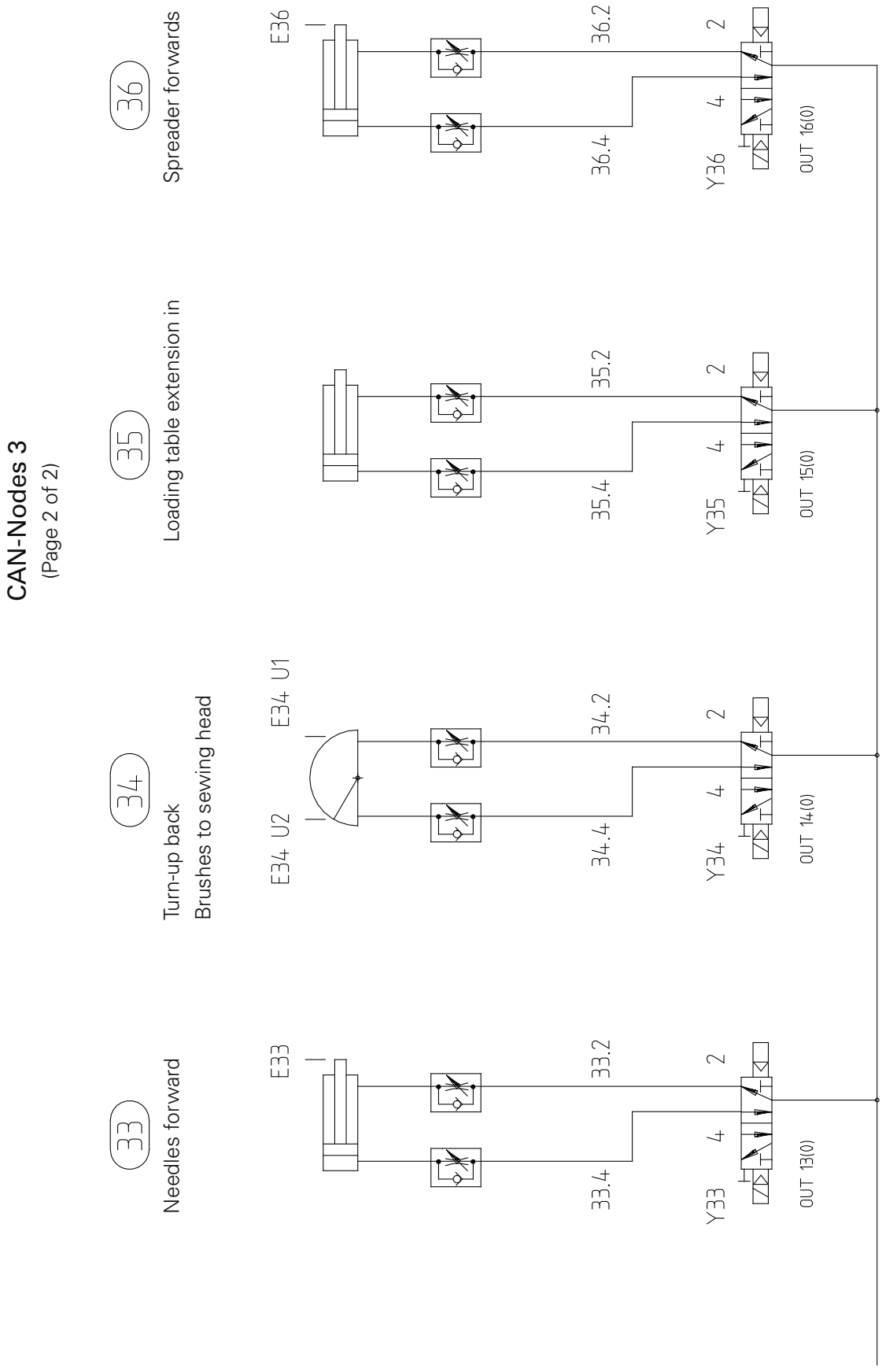
CAN-Nodes 3
(Page 2 of 2)
33
Needles forward
34
Turn-up back
Brushes to sewing head
35
Loading table extension in
36
Spreader forwards
E33
E34 U2
E34 U1
E36
33.2
33.4
34.2
34.4
35.2
35.4
36.2
36.4
Y33
Y34
Y35
Y36
2
4
OUT 13(0)
OUT 14(0)
OUT 15(0)
OUT 16(0)

16 Circuit diagrams

Reference list for the Circuit diagrams

A10	CAN 1	S200 =>1
A11	CAN 2	S200 =>2
A12	CAN 3	S200 =>3
A20	Control unit BS3	
A22	Sewing motor control unit Q201	
A24	Needle thread monitor evaluation	
A25	Needle thread monitor optics	
A26	P1 control panel	
A27	Laser optics	
A28	Bobbin thread monitor evaluation	
A29	Bobbin thread monitor optics	
A30	Power unit BS3 740 VA	
A31	Power unit pulse 125 VA	
A32	Power unit laser 4 VA 1.1A/3.5V	
A40	Stepping motor end stage	
A41	SSR	

B4	A10 CAN1	E4 workholder bar up
B6	A10 CAN1	E6 Cloth plate forwards
B10	A10 CAN1	E10 Clamp feed right (Reed)
B10	A A10 CAN1	E10A Clamp feed centre (Reed)
B11	A10 CAN1	E11 Clamp feed left (Reed)
B12	A10 CAN1	E12 Stacker table down
B15	A10 CAN1	E15 Wiper 3 up
B50	A10 CAN1	E50 Basic position X-axis
B51	A10 CAN1	E51 Basic position Y-axis
B52	A10 CAN1	E52 Needle thread malfunction (optics)
B53	A10 CAN1	E53 Bobbin thread malfunction (optics)
B54	A10 CAN1	E54 Material in clamp (sensor)

B18	A11 CAN2	E18 Loading clamp 1 open
B19	A11 CAN2	E19 Loading clamp 2 open
B40	A11 CAN2	E40 Cutter up (option ironing compensation strip)
B40U1	A11 CAN2	E40U1 Slide back (option ironing compensation strip)
B40U2	A11 CAN2	E40U2 Slide forwards (option ironing compensation strip)
B55	A11 CAN2	E55 Loading clamp positioned
B56	A11 CAN2	E56 Loading clamp closed
B57	A11 CAN2	E57 Compressed air O.K.

B27U1	A12 CAN3	E27U1 Positioning tube down
B27U2	A12 CAN3	E27U2 Positioning tube up
B28	A12 CAN3	E28 Positioning tube centre (vertical)
B29U1	A12 CAN3	E29U1 Loading table lift 1 back (Reed)
B29U2	A12 CAN3	E29U2 Loading table lift 1 forwards (Reed)
B30U1	A12 CAN3	E30U1 Positioning tube back
B30U2	A12 CAN3	E30U2 Positioning tube forwards
B31	A12 CAN3	E31 Positioning tube centre (horizontal)
B33	A12 CAN3	E33 Needles back

B34U1	A12 CAN3	E34U1 Turn-up back
B34U2	A12 CAN3	E34U2 Turn-up forwards
B36	A12 CAN3	E36 Spreader back
B38	A12 CAN3	E38 Table position workholder bar
C1	Capacitor for cutting motor M5	
E4	A10 CAN1	Workholder bar up
E6	A10 CAN1	Cloth plate forwards
E10	A10 CAN1	Clamp feed right
E10A	A10 CAN1	Clamp feed centre
E11	A10 CAN1	Clamp feed left
E12	A10 CAN1	Stacker table down
E15	A10 CAN1	Wiper 3 up
E50	A10 CAN1	Basic position X-axis
E51	A10 CAN1	Basic position Y-axis
E52	A10 CAN1	Needle thread malfunction
E53	A10 CAN1	Bobbin thread malfunction
E54	A10 CAN1	Material in clamp
E18	A11 CAN2	Loading clamp 1 open
E19	A11 CAN2	Loading clamp 2 open
E40	A11 CAN2	Cutter up (option ironing compensation strip)
E40U1	A11 CAN2	Slide back (option ironing compensation strip)
E40U2	A11 CAN2	Slide forwards (option ironing compensation strip)
E55	A11 CAN2	Loading clamp positioned
E56	A11 CAN2	Loading clamp closed
E57	A11 CAN2	Compressed air O.K.
E58	A11 CAN2	Foot switch vacuum
E59	A11 CAN2	Key switch
E61	A11 CAN2	Double start key 1
E62	A11 CAN2	Double start key 2
E27U1	A12 CAN3	Positioning tube down
E27U2	A12 CAN3	Positioning tube up
E28	A12 CAN3	Positioning tube centre (vertical)
E29U1	A12 CAN3	Loading table lift 1 back
E29U2	A12 CAN3	Loading table lift 1 forwards
E30U1	A12 CAN3	Positioning tube back
E30U2	A12 CAN3	Positioning tube forwards
E31	A12 CAN3	Positioning tube centre (horizontal)
E33	A12 CAN3	Needles back
E34U1	A12 CAN3	Turn-up back
E34U2	A12 CAN3	Turn-up forwards
E36	A12 CAN3	Spreader back
E38	A12 CAN3	Table position workholder bar
F0	Automatic fuse 16 A	
F7	M5 Cutter motor fuse 2 A	
F8	A30 Power unit fuse 10 A	
F9	H11 Sewing lamp fuse 0.5 A	
F10	X30 Socket fuse 10 A	

H1	A30 LED => F1-2 A
H2	A30 LED => F3-2.5 A
H3	A30 LED => F4-6.3 A
H4	A30 LED => F5-0.5 A
H4	A30 LED => F2-0.5 A
H10	A31 LED power unit pulse +24V / 5A / 125 VA
H1	A40 LED axis 1 ready
H2	A40 LED axis 2 ready
H3	A40 LED axis 3 ready
H4	A40 LED axis 1 overcurrent
H5	A40 LED axis 2 overcurrent
H6	A40 LED axis 3 overcurrent
H7	A40 LED excess voltage
H8	A40 LED excess voltage
H9	A40 LED excess temperature
H15	A40 LED mains on
H11	sewing lamp
H12	control lamp machine on
H13	control lamp double start key 1
H14	control lamp double start key 2
K1	Contactor vacuum motor on
K16	A41 SSR Cutter on (A11 CAN2)
M1	Sewing motor
M2	Stepping motor X axis
M3	Stepping motor Y axis
M4	Stepping motor B axis (option)
M5	Cutter motor
M6	Vacuum motor (option)
Q1	Main switch
R1	Pull up sensor B54
R2	Pull up sensor B54
S1	On switch
S2	EMERGENCY – off switch
S58	A11 CAN2 E58 foot switch vacuum
S59	A11 CAN2 E59 key switch
S61	A11 CAN2 E61 double start key 1
S62	A11 CAN2 E62 double start key 2
T1	Trafo 740 VA A30 power unit 3
A10	X200 CAN Bus control (Dip 1 S200)
A10	X300 Outputs OUT 1 – OUT 15
A10	X400 Inputs IN 1 – IN 16
A11	X200 CAN Bus control (Dip 2 S200)
A11	X300 Outputs OUT 1 – OUT 15
A11	X400 Inputs IN 1 – IN 16
A12	X200 CAN Bus control (Dip 3 S200)
A12	X300 Outputs OUT 1 – OUT 15
A12	X400 Inputs IN 1 – IN 16

A20	X101	COM 2 interface
A20	X103	COM 1 interface
A20	X208	CAN – bus
A20	X301	X – axis / motor SM 1 (M2)
A20	X302	Y – axis / motor SM 2 (M3)
A20	X303	B – axis / motor SM 3 (M4) option
A20	X400	Main drive sewing motor M1
A20	X401	Thread monitor

A22	X2 Synchronizer
A22	X3 Interface
A22	X6 Mains 230V AC
A22	X14 Sewing motor M1

A30	X1 Trafo secondary
A30	X2 Power supply BS3 x
A30	X3 Power supply fan
A30	X4 + 24V and 0V
A30	X5 + 24V and 0V
A30	X6 + 24V and 0V
A30	X7 Power supply A40 SM – end stage
A30	X8 Mains 230V AC
A30	X9 Trafo primary 230V AC

A40	X1 Connection CAN – Bus (not assigned)
A40	X2 Axis 1 control
A40	X3 Axis 2 control
A40	X4 Axis 3 control
A40	X5 Boot strap
A40	X6 Power supply + 24V and + 80V
A40	X7 Axis 1 motor – SMY M2
40	X8 Axis 2 motor – SMX M3
A40	X9 Axis 3 motor – SMB M4 (option)
A40	X10 Carriage control

XWI	AKZ4 Main connection strip 400V AC and 230V AC
XWII	AKZ4 Table connection strip start

X30	Mains socket 230V AC / 10A
X31	Power unit pulse 230V AC / 5A / 125VA
X33	Power unit AXX pulse +24V / 5A / 125VA
X40	PC connection RS 232 - interface
X41	A26 P1 control panel
X42	A26 P1 control panel power supply
X43	A26 P1 control panel signal connection
X44	Rotor position transmitter M1 sewing motor
X51	A50 Floppy signal connection
X52	A50 Floppy power supply
X61	Sewing motor M1
X62	Stepping motor SM X axis M2
X63	Stepping motor SM Y axis M3
X64	Stepping motor SM B axis M4 (option)
X65	Knife motor M5

X66	Vacuum motor M6 (option)		
X111	Y1	A10 CAN1	Thread trimmer on
X112	Y2	A10 CAN1	Vacuum positioning tube on
X113	Y3	A10 CAN1	Vacuum table on
X114	Y4	A10 CAN1	Workholder bar down
X115	Y5	A10 CAN1	Workholder bar up
X116	Y6	A10 CAN1	Cloth plate forwards
X117	Y7	A10 CAN1	Top clamp closed
X118	Y8	A10 CAN1	Swing down bottom clamp
X119	Y9	A10 CAN1	Clamp clutch on
X120	Y10	A10 CAN1	Clamp feed to right
X121	Y11	A10 CAN1	Clamp feed to left
X122	Y12	A10 CAN1	Stacker table on
X123	Y13	A10 CAN1	Needle thread tension off
X124	Y14	A10 CAN1	Wiper 3 off
X125	Y15	A10 CAN1	Wiper 3 on (raised)
X126	Y24	A10 CAN1	Underpressure reduction on
X132	Y17	A11 CAN2	Wiper 2 off
X135	Y18	A11 CAN2	Loading clamp 1 closed
X136	Y19	A11 CAN2	Loading clamp 2 closed
X137	Y20	A11 CAN2	Catcher back, engage stationary knife
X138	Y21	A11 CAN2	Engage catcher
X139	Y22	A11 CAN2	CAN2 (turn-up limit on)
X133	Y23	A11 CAN2	Wiper 1 off
X140	Y40	A11 CAN2	Cutter down (option ironing compensation strip)
X141	Y41	A11 CAN2	Slide back (option ironing compensation strip)
X142	Y42	A11 CAN2	Slide on (option ironing compensation strip)
X143	Y43	A11 CAN2	Blast air (option ironing compensation strip)
X151	Y27U1	A12 CAN3	Positioning tube cylinder 1 down (vertical)
X152	Y27U2	A12 CAN3	Positioning tube cylinder 1 up (vertical)
X153	Y28U1	A12 CAN3	Positioning tube cylinder 2 down (vertical)
X154	Y28U2	A12 CAN3	Positioning tube cylinder 2 up (vertical)
X155	Y29U1	A12 CAN3	Loading table lift 1 back
X156	Y29U2	A12 CAN3	Loading table lift 1 forwards
X157	Y30U1	A12 CAN3	Loading table lift 2 end positions
X158	Y30U2	A12 CAN3	Loading table lift 2 special position
X159	Y31U1	A12 CAN3	Positioning tube cylinder 1 back (horizontal)
X160	Y31U2	A12 CAN3	Positioning tube cylinder 1 forwards (horizontal)
X161	Y32U1	A12 CAN3	Positioning tube cylinder 2 back (horizontal)
X162	Y32U2	A12 CAN3	Positioning tube cylinder 2 forwards (horizontal)
X163	Y33	A12 CAN3	Needles forwards
X164	Y34	A12 CAN3	Turn-up back
X165	Y35	A12 CAN3	Loading table extension on
X166	Y36	A12 CAN3	Spreader forwards
Y1	A10 CAN1		Thread trimmer on
Y2	A10 CAN1		Vacuum positioning tube on
Y3	A10 CAN1		Vacuum table on
Y4	A10 CAN1		Workholder bar down
Y5	A10 CAN1		Workholder bar up

Y6	A10 CAN1	Cloth plate forwards
Y7	A10 CAN1	Top clamp closed
Y8	A10 CAN1	Swing down bottom clamp
Y9	A10 CAN1	Clamp clutch on
Y10	A10 CAN1	Clamp feed to right
Y11	A10 CAN1	Clamp feed to left
Y12	A10 CAN1	Stacker table up
Y13	A10 CAN1	Needle thread tension off
Y14	A10 CAN1	Wiper 3 off
Y15	A10 CAN1	Wiper 3 on (raised)
Y24	A10 CAN1	Underpressure reduction on
Y17	A11 CAN2	Wiper 2 off
Y18	A11 CAN2	Loading clamp 1 closed
Y19	A11 CAN2	Loading clamp 2 closed
Y20	A11 CAN2	Catcher back, engage stationary knife
Y21	A11 CAN2	Engage catcher
Y22	A11 CAN2	CAN2 turn-up limit on
Y23	A11 CAN2	Wiper 1 off
Y40	A11 CAN2	Cutter down (option ironing compensation strip)
Y41	A11 CAN2	Slide back (option ironing compensation strip)
Y42	A11 CAN2	Slide up (option ironing compensation strip)
Y43	A11 CAN2	Blast air (option ironing compensation strip)
Y27U1	A12 CAN3	Positioning tube cylinder 1 down (vertical)
Y27U2	A12 CAN3	Positioning tube cylinder 1 up (vertical))
Y28U1	A12 CAN3	Positioning tube cylinder 2 down (vertical)
Y28U2	A12 CAN3	Positioning tube cylinder 2 up (vertical)
Y29U1	A12 CAN3	Loading table lift 1 back
Y29U2	A12 CAN3	Loading table lift 1 forwards
Y30U1	A12 CAN3	Loading table lift 2 end positions
Y30U2	A12 CAN3	Loading table lift 2 special position
Y31U1	A12 CAN3	Positioning tube cylinder 1 back (horizontal)
Y31U2	A12 CAN3	Positioning tube cylinder 1 forwards (horizontal)
Y32U1	A12 CAN3	Positioning tube cylinder 2 back (horizontal)
Y32U2	A12 CAN3	Positioning tube cylinder 2 forwards (horizontal)
Y33	A12 CAN3	Needles forward
Y34	A12 CAN3	Turn-up back
Y35	A12 CAN3	Loading table extension on
Y36	A12 CAN3	Spreader forward
Z1	Interference filter (10VSK 1)	

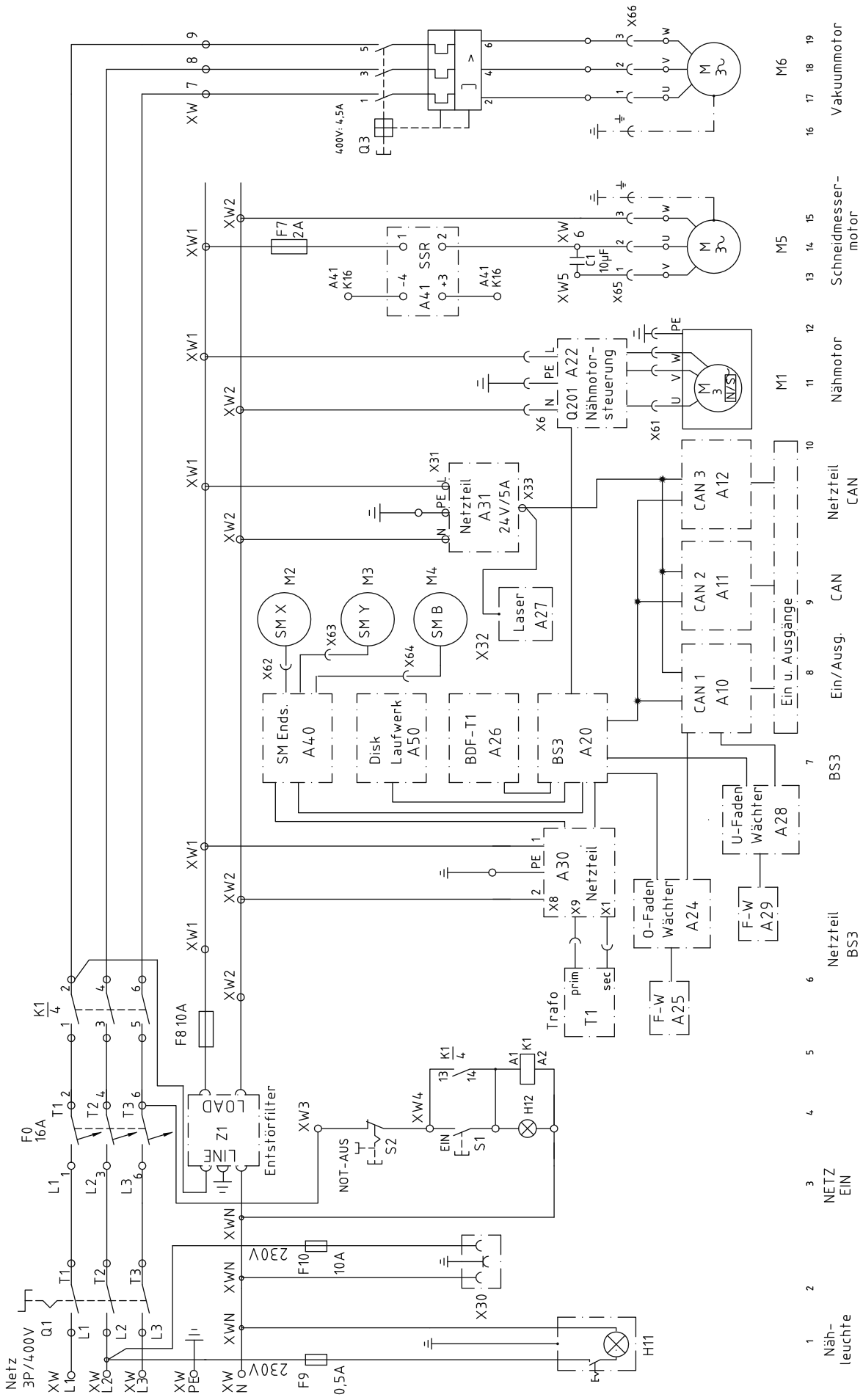
Netz 3P/400V
Q1
F0 16A
Z1 Entstörfilter
LINE
LOAD
F8 10A
F9 0,5A
F10 10A
230V
NOT-AUS
S2
EIN
S1
H11
H12
K1
Q3
400V: 4,5A
F7 2A
A41 SSR
C1 10µF
Q201 A22 Nähmotor-steuerung
Netzteil A31 24V/5A
Laser A27
SM X
SM Y
SM B
SM Ends. A40
Disk Laufwerk A50
BDF-T1 A26
BS3 A20
CAN 1 A10
CAN 2 A11
CAN 3 A12
Ein u. Ausgänge
U-Faden Wächter A28
F-W A29
O-Faden Wächter A24
F-W A25
A30 Netzteil
Trafo T1
prim
sec
M1
M5
M6
Nähmotor
Schneidmesser-motor
Vakuummotor
Netzteil CAN
CAN
Ein/Ausg.
BS3
Netzteil BS3
NETZ EIN
Näh-leuchte

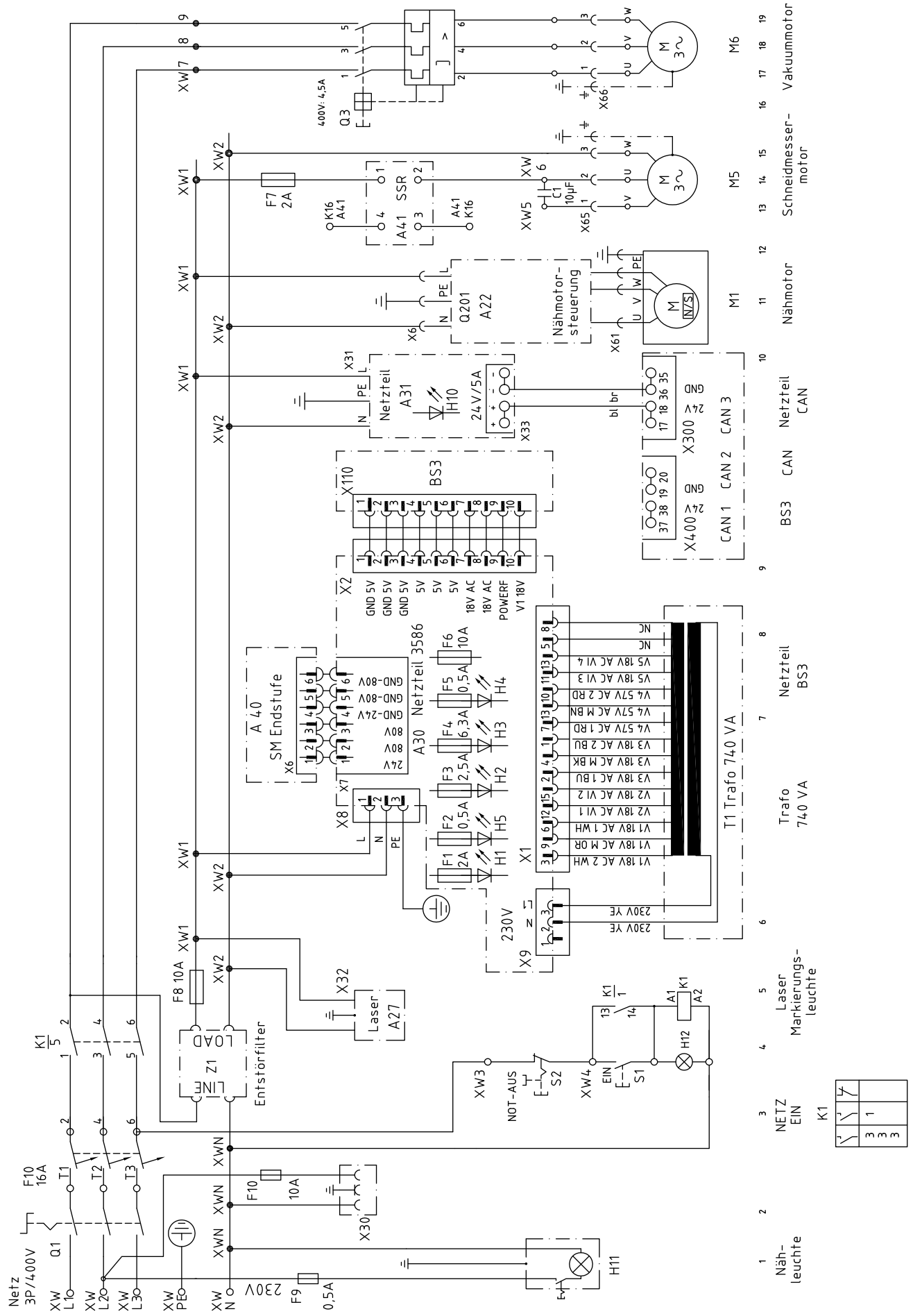
Netz 3P/400V
Q1
F10 16A
T1
T2
T3
K1
F8 10A
Z1
LINE
LOAD
Entstörfilter
F9 0,5A
230V
H11
F10 10A
X30
XW1
XW2
XWN
XW3
NOT-AUS
S2
XW4
EIN
S1
H12
K1
Laser
A27
X32
X8
X7
A 40
SM Endstufe
X6
A30 Netzteil 3586
F1 2A
F2 0,5A
F3 2,5A
F4 6,3A
F5 0,5A
F6 10A
H1
H2
H3
H4
H5
X1
T1 Trafo 740 VA
230V
X9
X2
X110
BS3
GND 5V
18V AC
POWERF
V1 18V
X400
X300
CAN 1
CAN 2
CAN 3
24V
GND
Netzteil
A31
H10
24V/5A
X33
X31
Q201
A22
Nähmotor-steuerung
X6
X61
M1
Nähmotor
F7 2A
K16
A41
SSR
XW5
C1 10µF
X65
M5
Schneidmesser-motor
X66
M6
Vakuummotor
Q3
400V: 4,5A
Nähleuchte
NETZ EIN
Laser Markierungs-leuchte
Trafo 740 VA
Netzteil BS3
Netzteil CAN
BS3
CAN
Schneidmesser-motor
Vakuummotor

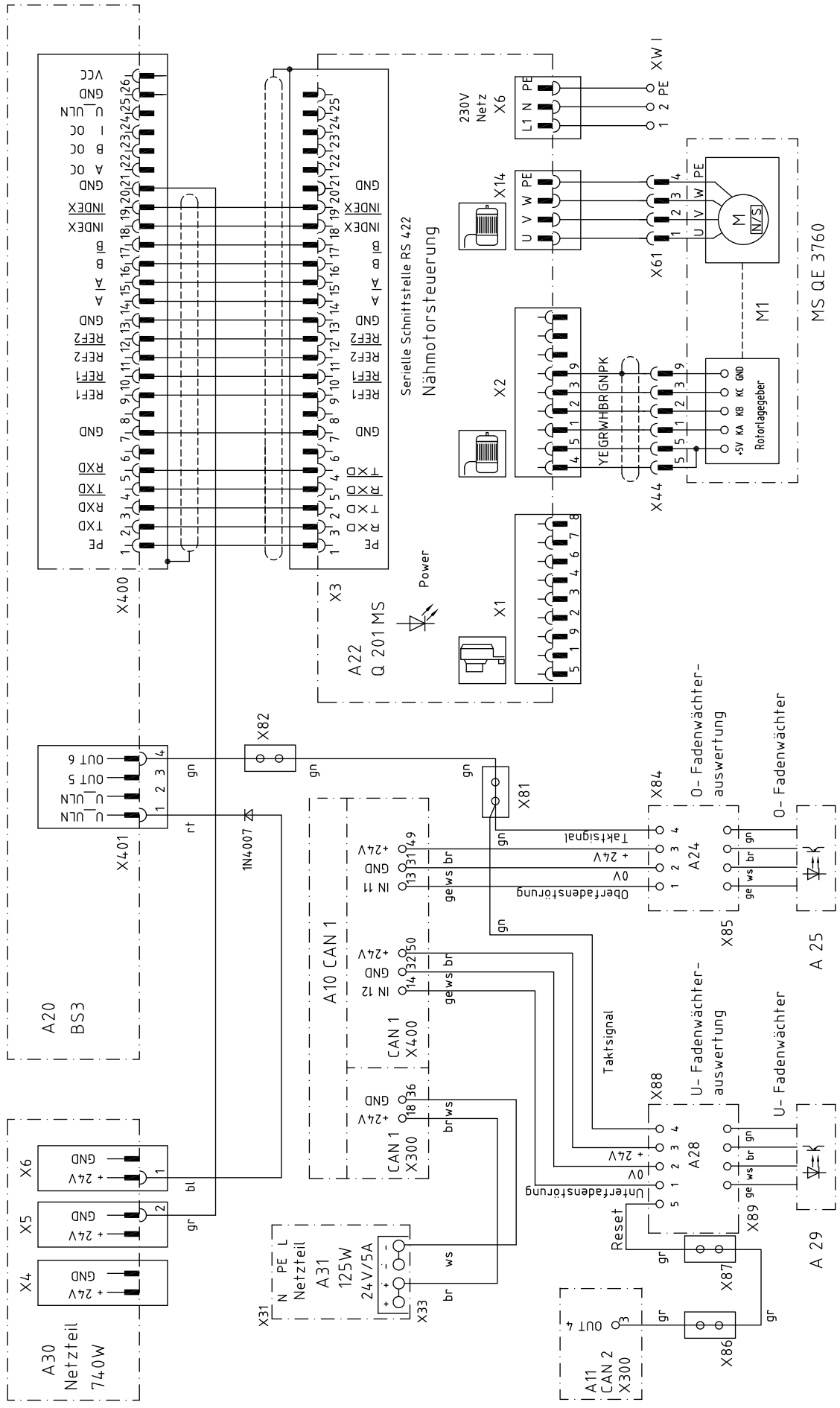
A20
BS3
X400
X401
A22
Q 201 MS
X3
Serielle Schnittstelle RS 422
Nähmotorsteuerung
Power
X1
X2
X14
230V
Netz
X6
XW I
X61
X44
M1
MS QE 3760
Rotorlagegeber
X82
X81
1N4007
A10 CAN 1
CAN 1
X400
CAN 1
X300
X84
X85
A24
O- Fadenwächter-
auswertung
O- Fadenwächter
A 25
Taktsignal
Oberfadenstörung
X88
X89
A28
U- Fadenwächter-
auswertung
U- Fadenwächter
A 29
Unterfadenstörung
Reset
X87
X86
A11
CAN 2
X300
X31
Netzteil
A31
125W
24V/5A
X33
X4
X5
X6
A30
Netzteil
740W

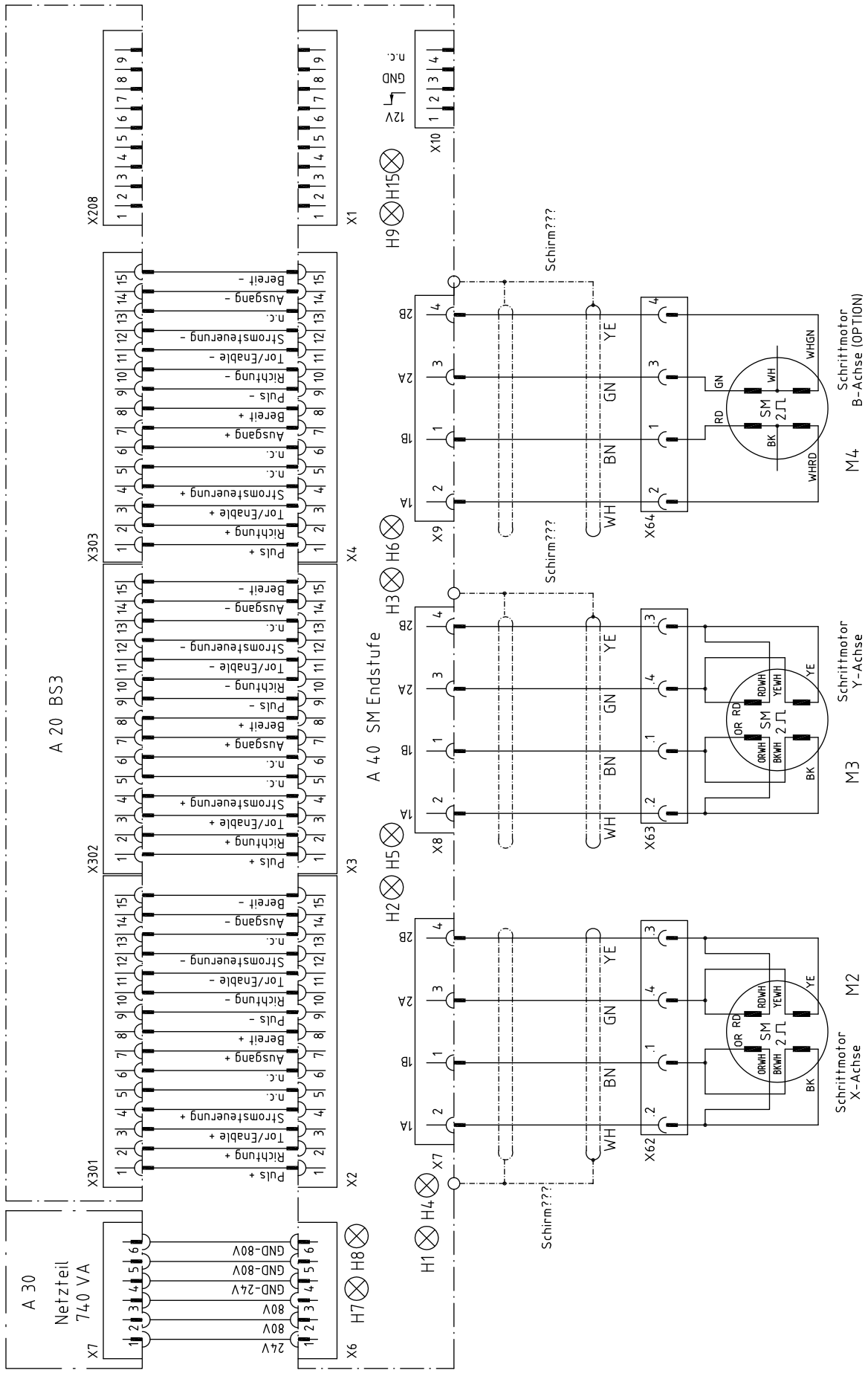
A 20 BS3
A 30 Netzteil 740 VA
A 40 SM Endstufe
X208
X1
X303
X4
X302
X3
X301
X2
X7
X6
X10
X9
X8
X64
X63
X62
H1
H2
H3
H4
H5
H6
H7
H8
H9
H15
Schirm???
Schrittmotor B-Achse (OPTION)
Schrittmotor Y-Achse
Schrittmotor X-Achse
M2
M3
M4
SM 2Ω
GND-80V
GND-24V
80V
24V
Puls +
Richtung +
Tor/Enable +
Stromsteuerung +
Bereit +
Puls -
Richtung -
Tor/Enable -
Stromsteuerung -
Ausgang -
Bereit -
Ausgang +
n.c.
12V
GND
WH
BN
GN
YE
RD
BK
WHGN
WHRD
RDWH
YEWH
ORWH
BKWH
OR

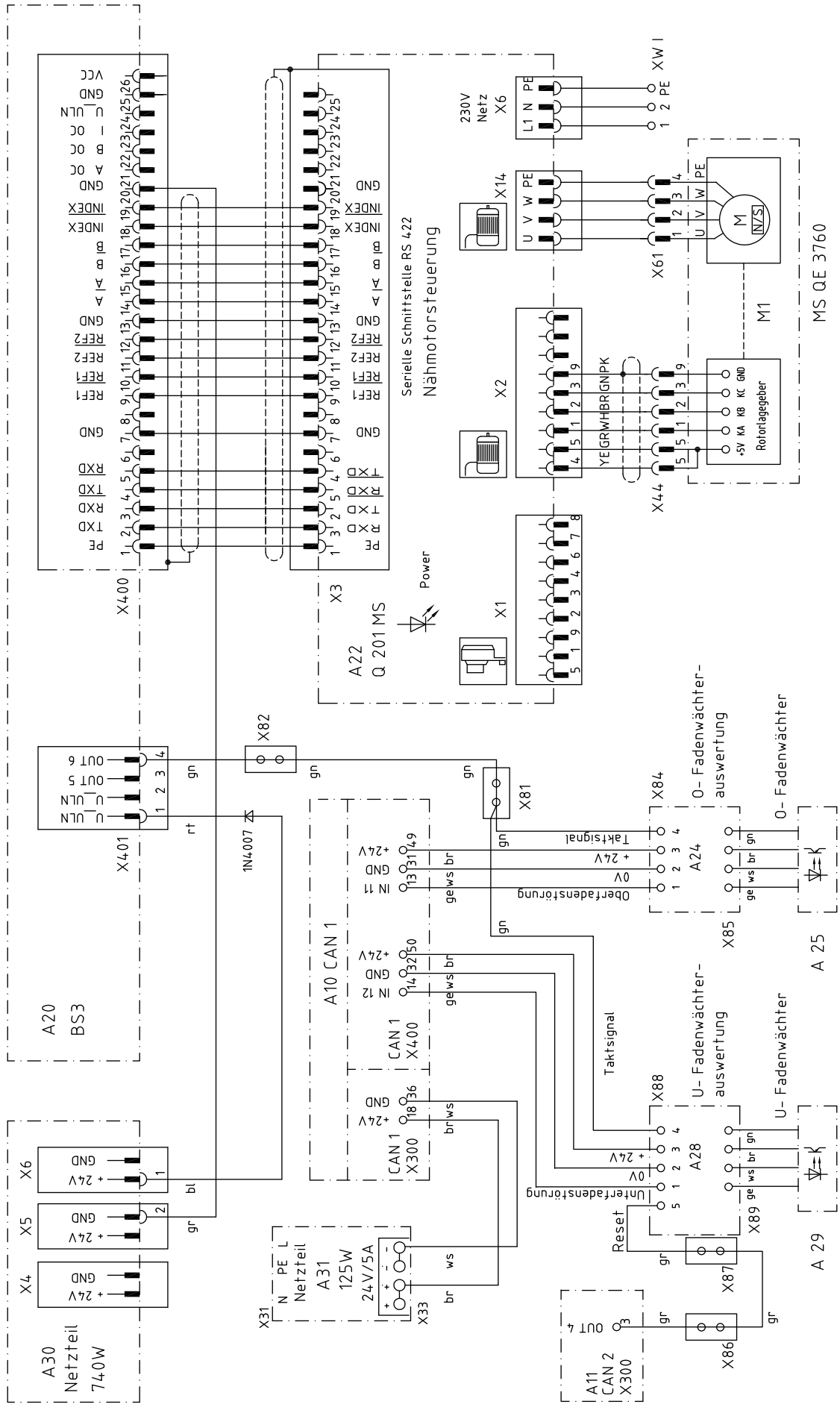
A20
BS3
X400
X401
X3
Serielle Schnittstelle RS 422
Nähmotorsteuerung
A22
Q 201 MS
Power
X1
X2
X14
230V
Netz
X6
XW I
X61
X44
M1
MS QE 3760
Rotorlagegeber
X82
X81
1N4007
A10 CAN 1
CAN 1
X400
CAN 1
X300
X84
X85
A24
O- Fadenwächter-
auswertung
O- Fadenwächter
A 25
Taktsignal
Oberfadenstörung
X88
X89
A28
U- Fadenwächter-
auswertung
U- Fadenwächter
A 29
Unterfadenstörung
Reset
X87
X86
A11
CAN 2
X300
X31
Netzteil
A31
125W
24V/5A
X33
X4
X5
X6
A30
Netzteil
740W

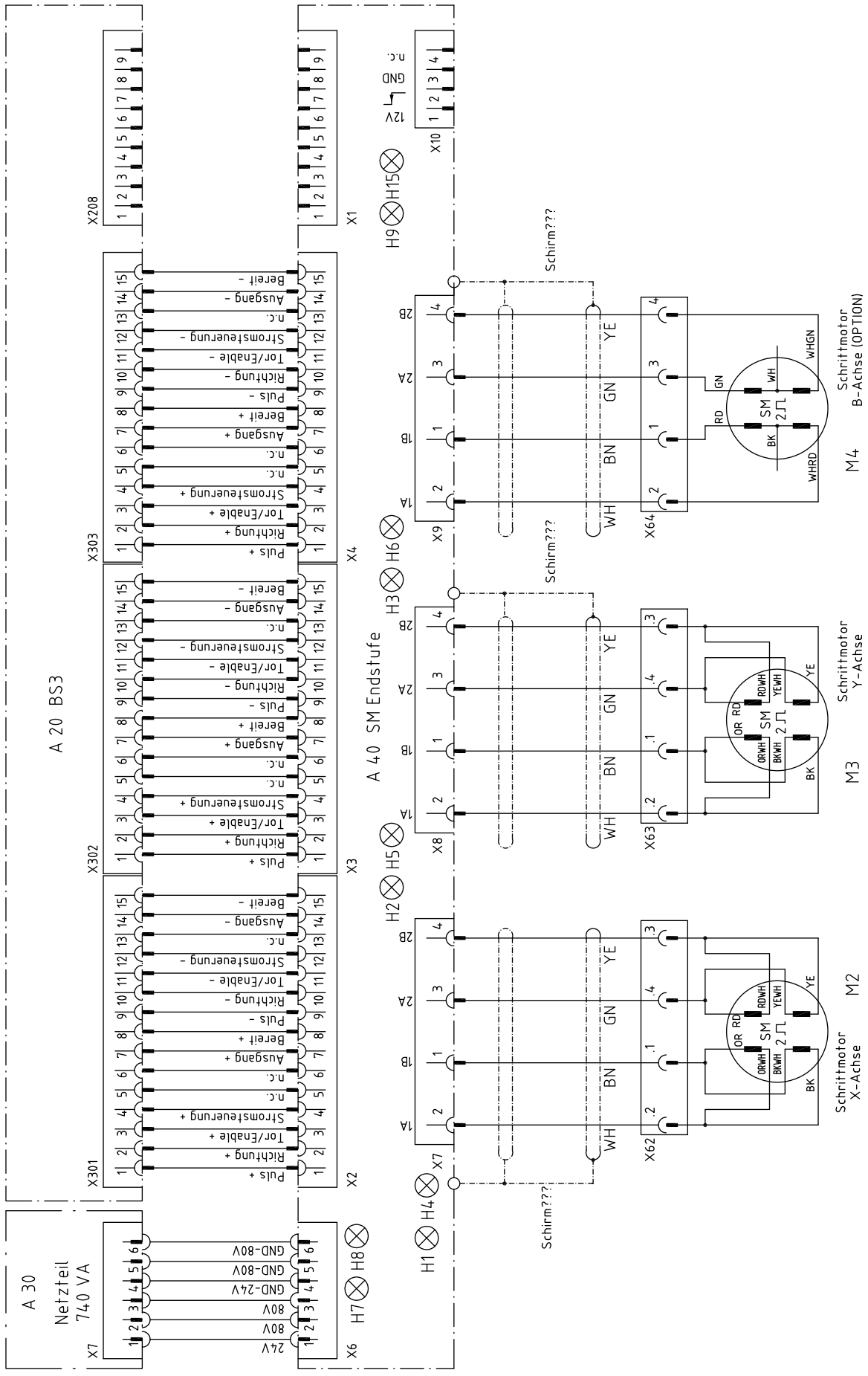
A 30
Netzteil
740 VA
X7
24V
80V
80V
GND-24V
GND-80V
GND-80V
X6
H7
H8
A 20 BS3
X301
X302
X303
X208
X1
X2
X3
X4
Puls +
Richtung +
Tor/Enable +
Stromsteuerung +
n.c.
n.c.
Ausgang +
Bereit +
Puls -
Richtung -
Tor/Enable -
Stromsteuerung -
n.c.
Ausgang -
Bereit -
A 40 SM Endstufe
H1
H2
H3
H9
H4
H5
H6
H15
X7
X8
X9
X10
12V
GND
n.c.
Schirm???
1A
1B
2A
2B
WH
BN
GN
YE
X62
X63
X64
M2
M3
M4
Schrittmotor
X-Achse
Schrittmotor
Y-Achse
Schrittmotor
B-Achse (OPTION)
SM
2
BK
ORWH
BKWH
OR
RD
RDWH
YEWH
WHRD
WHGN

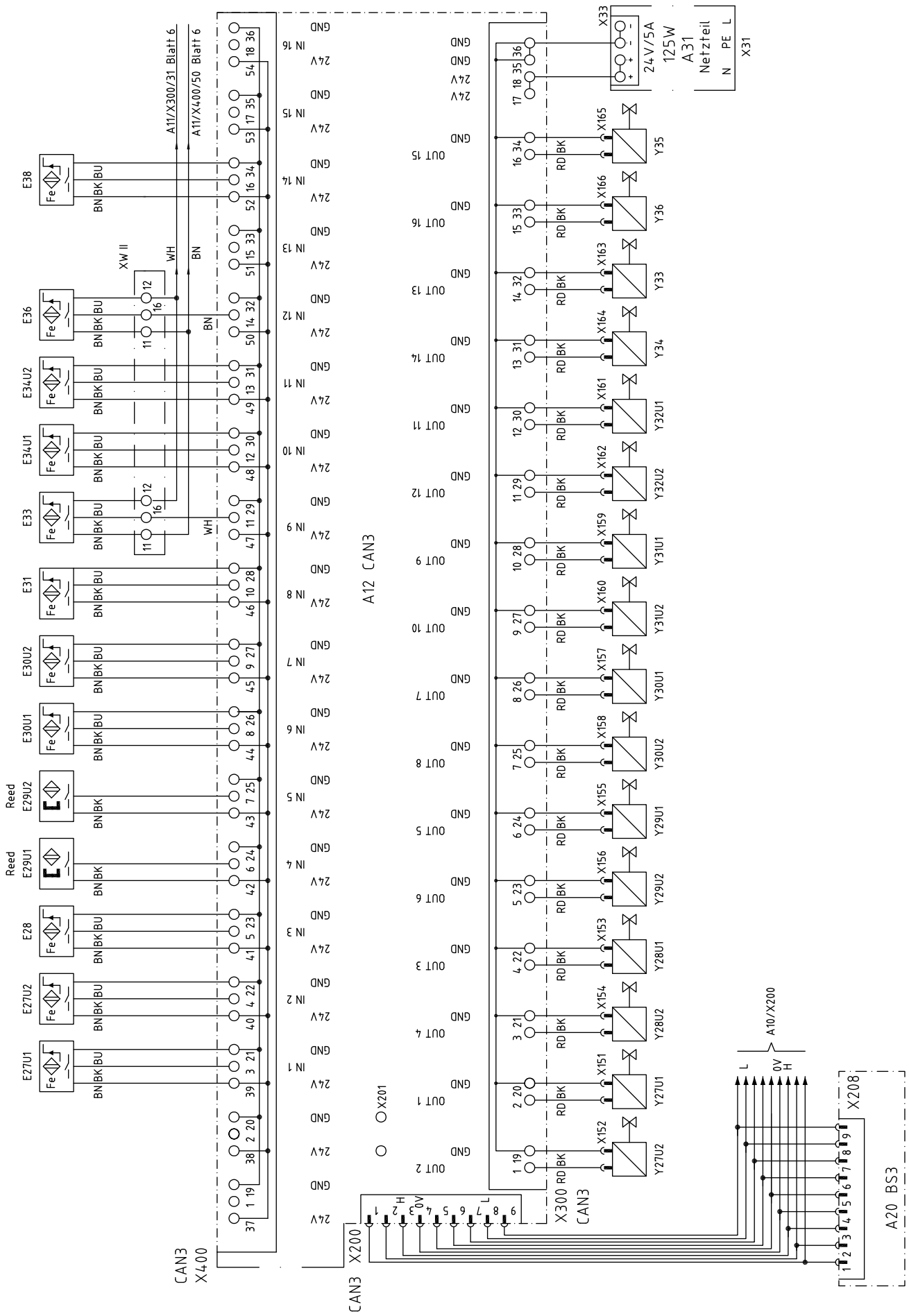
A11/X300/31 Blatt 6
A11/X400/50 Blatt 6
XW II
E38
E36
E34U2
E34U1
E33
E31
E30U2
E30U1
Reed E29U2
Reed E29U1
E28
E27U2
E27U1
A12 CAN3
X201
X200
CAN3
X400
X300
CAN3
X33
24V/5A
125W
A31
Netzteil
X31
A10/X200
X208
A20 BS3

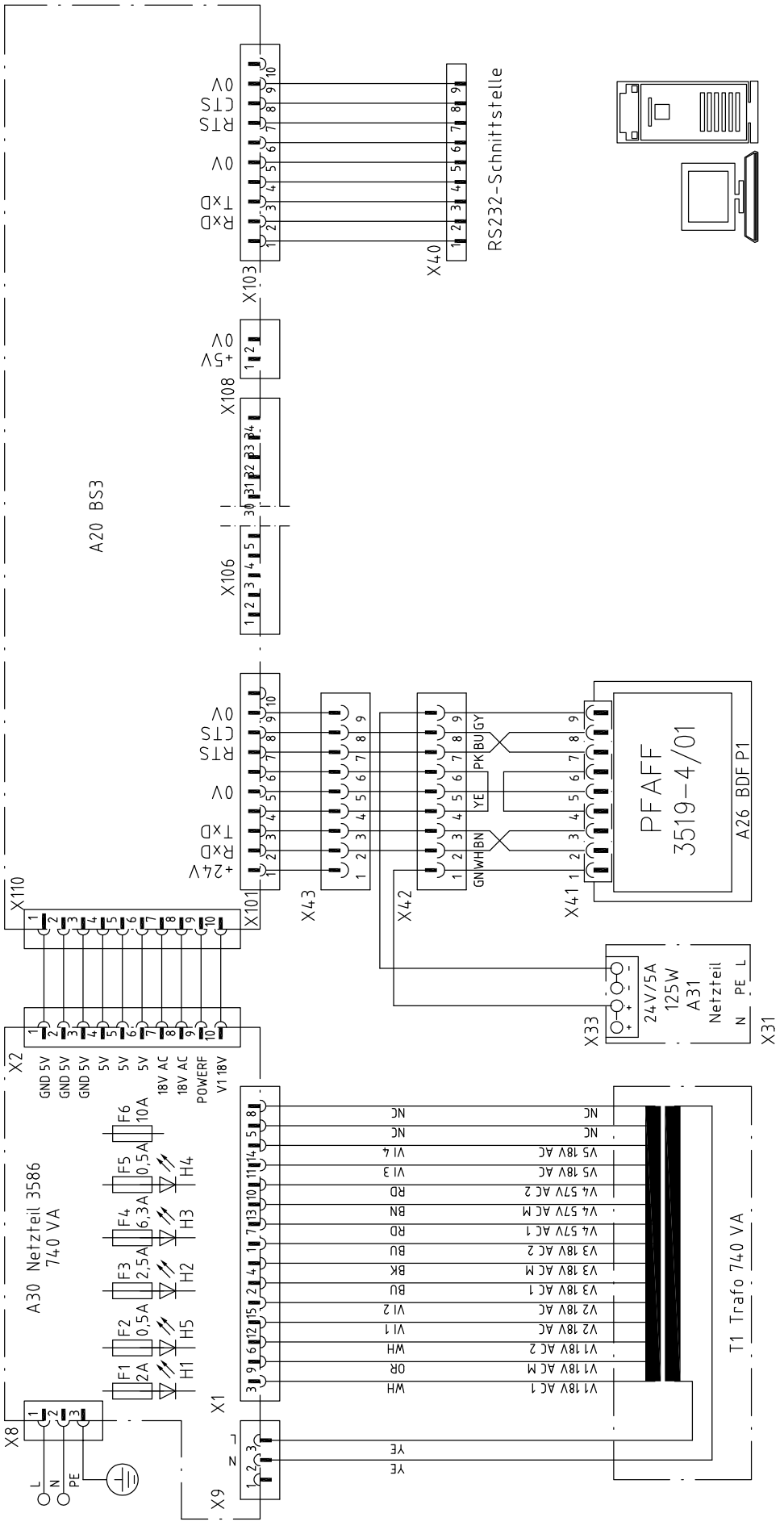
A20 BS3
A30 Netzteil 3586
740 VA
T1 Trafo 740 VA
RS232-Schnittstelle
PFAFF
3519-4/01
A26 BDF P1
24V/5A
125W
A31
Netzteil
X1
X2
X8
X9
X31
X33
X40
X41
X42
X43
X101
X103
X106
X108
X110
F1 2A
F2 0,5A
F3 2,5A
F4 6,3A
F5 0,5A
F6 10A
H1
H2
H3
H4
H5
L
N
PE

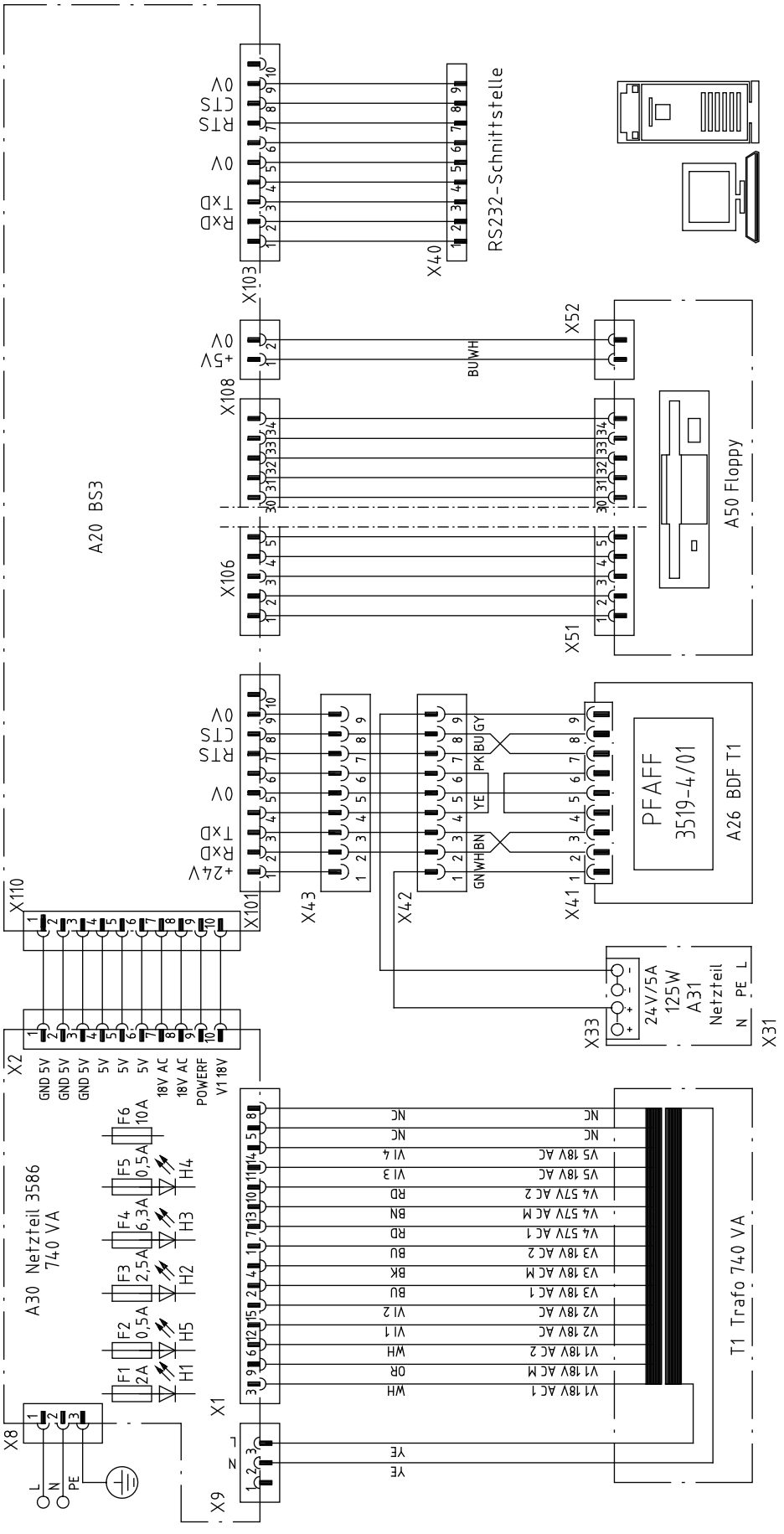
A20 BS3
X103
X40
RS232-Schnittstelle
X52
X108
X106
X51
A50 Floppy
X101
X110
X43
X42
X41
PFAFF
3519-4/01
A26 BDF T1
X33
24V/5A
125W
A31
Netzteil
X31
X2
A30 Netzteil 3586
740 VA
X1
T1 Trafo 740 VA
X8
X9
L
N
PE

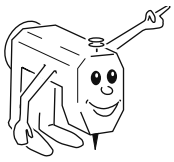

Note

PFAFF® Industrial



Europäische Union
Wachstum durch Innovation – EFRE



PFAFF Industriesysteme
und Maschinen AG

Hans-Geiger-Str. 12 - IG Nord
D-67661 Kaiserslautern

Phone: +49-6301 3205 - 0
Fax: +49-6301 3205 1386
E-mail: info@pfaff-industrial.com

Hotlines:

Technical service:	+49-175/2243-101
Application consultance:	+49-175/2243-102
Spare-parts hotline:	+49-175/2243-103

Printed in Germany

© PFAFF Industriesysteme und Maschinen AG 2009, PFAFF is the exclusive trademark of VSM Group AB.PFAFF Industriesysteme und Maschinen AG is an authorized licensee of the PFAFF trademark.