PFAFF® Industrial

3586-12/02; -13/01; -13/02

INSTRUCTION MANUAL

This instruction manual applies to machines
from software version **0382/001, 0383/001**
and serial number **2 762 067** onwards

296-12-19 021/001
Betriebsanleitung engl. 10.12



Diese Betriebsanleitung hat für alle in **Kapitel 3 Technische Daten** aufgeführten Ausführungen und Unterklassen Gültigkeit.

Der Nachdruck, die Vervielfältigung sowie die Übersetzung - auch auszugsweise - aus PFAFF-Betriebsanleitungen ist nur mit unserer vorherigen Zustimmung und mit der Quellenangabe gestattet.

PFAFF Industriesysteme
und Maschinen AG

Hans-Geiger-Str. 12 - IG Nord
D-67661 Kaiserslautern

Contents .....Page

Register 01

1	**Safety**	**7**
1.01	Directives	7
1.02	General notes on safety	7
1.03	Safety symbols	8
1.04	Important notes for the user	8
1.05	Notes for operating and technical staff	9
1.05.01	Operating staff	9
1.05.02	Technical staff	9
1.06	Danger	10

Register 02

2	**Proper use**	**11**
3	**Specifications**	**12**
4	**Disposal of Machine**	**13**
5	**Transportation, packing and storage**	**14**
5.01	Transportation to customer's premises	14
5.02	Transportation inside the customer's premises	14
5.03	Disposal of packing materials	14
5.04	Storage	14
6	**Explanation of symbols**	**15**

Register 03

7	**Control elements**	**17**
7.01	On/off switch	17
7.02	Bundle clamp switch (optional)	17
7.03	Control panel	18

Register 04

8	**Installation and commissioning**	**19**
8.01	Installation	19
8.01.01	Adjusting the table height	19
8.01.02	Assembling and fitting the reel stand	20
8.01.03	Fitting the bundle clamp (optional)	20

Contents ..... Page

8.02 Commissioning 21
8.03 Switching the machine on/off 22
8.04 Selecting the language and units 23
8.05 Adjusting the control panel 24
8.06 Adjusting the zero points of the drive units for the X and Y axis. 25
8.07 Adjusting the zero point of the take-over unit 27
8.08 Setting the correction of the starting point 28

Register 05

9 Preparation 31
9.01 Inserting the needle 31
9.02 Threading the needle thread /adjusting the needle thread tension 32
9.03 Unterfaden aufspulen / Unterfadenvorspannung regulieren 33
9.04 Changing the bobbin / adjusting the bobbin thread tension 34
9.05 Adjusting the height of the sewing foot 35
9.05 Selecting the program number 36
9.06 Selecting / configuring a sequence 37
9.06.01 Selecting a sequence 37
9.06.02 Configuring a sequence 38
9.07 Adjusting the bobbin thread stitch counter 39

Register 06

10 Sewing 41
10.01 Sewing with automatic program start 42
10.02 Sewing with manual program start 43
10.03 Sewing with sequences 46
10.04 Program interruption 47
10.05 Error messages 48

11 Input 49
11.01 Overview of the functions in the input mode 49
11.02 Creating / altering seam programs 51
11.02.01 Dart 1 53
11.02.02 Dart 2 54
11.02.03 Waistband pleat 1 55
11.02.04 Waistband pleat 2 57
11.02.05 Basting seam 59
11.03 Examples for entering seam programs 60
11.04 Program management 62
11.05 Rights of access 64

Contents .....Page

Register 07

12	Care and maintenance	67
12.01	Maintenance intervals	67
12.02	Cleaning the machine	68
12.03	Cleaning the hook compartment	69
12.04	Cleaning the fan air filter	70
12.05	Cleaning the air filter of the air-filter/lubricator	70
12.06	Checking/adjusting the air pressure	71
12.07	Topping up the oil tank	72
12.08	Lubricating the feed guide units	73
13	Adjustment	74
13.01	Notes on adjustment	74
13.02	Tools, gauges and other accessories	74
13.03	Abbreviations	74
13.04	Tilting the sewing head	75
13.05	Adjustment aids	76
13.06	Adjusting the sewing head	77
13.06.01	Basic position of the machine drive	77
13.06.02	Needle in needle hole centre	78
13.06.03	Hook shaft bearing and toothed belt tension	79
13.06.04	Hook lubrication	80
13.06.05	Needle rise, hook-to-needle clearance, needle height and bobbin case position finger	81
13.06.06	Thread check spring and slack thread regulator	82
13.06.07	Bobbin winder	83
13.07	Adjusting the thread trimming device	84
13.07.01	Preliminary adjustment of the control cam	84
13.07.02	Adjusting the roller lever	85
13.07.03	Lateral adjustment of the thread catcher	86
13.07.04	Knife position	87
13.07.05	Front point of reversal of the thread catcher	88
13.07.06	Manual trimming check	89
13.07.07	Readjusting the control cam	90
13.08	Adjusting the feed mechanisms	91
13.08.01	Aligning the fabric pressure bar	91
13.08.02	Aligning the drive unit of the X-axis	92
13.08.03	Tensioning the belt on the drive unit of the X-axis	93
13.08.04	Stop on drive unit of the Y-axis	94
13.08.05	Tooth flank play on the drive unit of the Y-axis	95
13.08.06	Needle height of the material take-over unit	96
13.08.07	Adjusting the loading table	97

Contents ..... Page

13.08.08 Adjusting the presser foot 98
13.09 Service menu 99
13.09.01 Cold start 100
13.09.02 Loading / updating the operating program 101
13.10 Sewing motor adjustments 102
13.11 Parameter settings 103
13.11.01 Selecting and altering parameters. 103
13.11.02 List of parameters 104
13.11.03 Carriage start (NIS) 106

Register 08

14 Control unit 107
14.01 Basic setting / Diagnosis / Pin assignment 107
14.01.01 Power unit A30 107
14.01.02 Basic control unit A20 109
14.01.03 Sewing drive A22 111
14.01.04 Stepping motor drive A40 112
14.01.05 CAN node A10 113
14.02 Description of the error messages 115
14.02.01 General errors 115
14.02.02 CAN-errors 118
14.02.03 Stitch generation errors 118
14.02.04 Sewing motor errors 118
14.02.06 Errors – Stepping motor drive 119
14.03 List of outputs and inputs 120
14.03.01 CAN-nodes 1 120
14.03.02 Special outputs 121
14.04 Boot key 121

15 Pneumatics-switch diagram 122
15.01 PFAFF 3586-12/02 122
15.02 PFAFF 3586-13/.. 124

16 Circuit diagrams 126

1 Safety

1.01 Directives

The machine has been constructed in accordance with the requirements listed in the EC Declaration of Conformity and the Declaration of Incorporation.
In addition to this Instruction Manual, also observe all generally accepted, statutory and other regulations and legal requirements and all valid environmental protection regulations! The regionally valid regulations of the social insurance society for occupational accidents or other supervisory organizations are to be strictly adhered to!

1.02 General notes on safety

- This machine may only be operated by adequately trained operators and only after having completely read and understood the Instruction Manual!
- All Notes on Safety and Instruction Manuals of the motor manufacturer are to be read before operating the machine!
- The danger and safety instructions on the machine itself are to be followed!
- This machine may only be used for the purpose for which it is intended and may not be operated without its safety devices. All safety regulations relevant to its operation are to be adhered to.
- When exchanging sewing tools (e.g. needle, roller presser, needle plate and bobbin), when threading the machine, when leaving the machine unattended and during maintenance work, the machine is to be separated from the power supply by switching off the On/Off switch or by removing the plug from the mains!
- Everyday maintenance work is only to be carried out by appropriately trained personnel!
- Repairs and special maintenance work may only be carried out by qualified service staff or appropriately trained personnel!
- Work on electrical equipment may only be carried out by appropriately trained personnel!
- Work is not permitted on parts and equipment which are connected to the power supply! The only exceptions to this rule are found in the regulations EN 50110.
- Modifications and alterations to the machine may only be carried out under observance of all the relevant safety regulations!
- Only spare parts which have been approved by us are to be used for repairs! We expressly point out that any replacement parts or accessories which are not supplied by us have not been tested and approved by us. The installation and/or use of any such products can lead to negative changes in the structural characteristics of the machine. We are not liable for any damage which may be caused by non-original parts.

1.03 Safety symbols



Danger!
Special points to observe.



Danger of injury to operating or technical staff!



Caution

Do not operate without finger guard and safety devices.

Before threading, changing bobbin and needle, cleaning etc. **switch off main switch**.

1.04 Important notes for the user

- This instruction manual belongs to the equipment of the machine and must be available to the operating staff at all times.
- This instruction manual must be read before the machine is operated for the first time.
- Both operating and technical staff must be instructed on the safety devices of the machine and on safe working methods.
- It is the duty of the user to operate the machine in perfect running order only.
- The user must ensure that none of the safety devices are removed nor put out of working order.
- The user must ensure that only authorized persons operate and work on the machine.

For further information please refer to your PFAFF agency..

1.05 Notes for operating and technical staff

1.05.01 Operating staff

Operating staff are the persons responsible for setting up, operating and cleaning the machine and for eliminating any malfunctioning in the sewing area.

The operating staff is obliged to observe the following points:

- The notes on safety in this instruction manual must always be observed!
- Any working methods, which adversely affect the safety of the machine, must be avoided.!
- Loose-fitting clothing should be avoided. No jewellery, such as chains and rings, should be worn!
- Ensure that only authorised persons enter the danger area of the machine!
- Any changes occurring on the machine, which may affect its safety, must be reported to the user immediately.

1.05.02 Technical staff

Technical staff are persons who have been trained in electrical engineering/electronics and mechanical engineering. They are responsible for lubricating, servicing, repairing and adjusting the machine.

The technical staff is obliged to observe the following points:

- The notes on safety in this instruction manual must always be observed!
- Before carrying out any adjustment or repair work the main switch must be switched off and measures taken to prevent it from being switched on again!
- Never work on parts or equipment still connected to the power supply! Exceptions are only permissible in accordance with the regulations EN 50110.
- All safety covers must be replaced after the completion of maintenance or repair work!

1.06 Danger

A working area of **1 meter** is to be kept free both in front of and behind the machine while it is in operation, so that it is always easily accessible.

Never reach into the sewing area while sewing!
Danger of injury by the needle!

Never leave objects on the table while adjusting the machine settings! Objects can become trapped or be slung away!
Danger of injury by hurled objects!

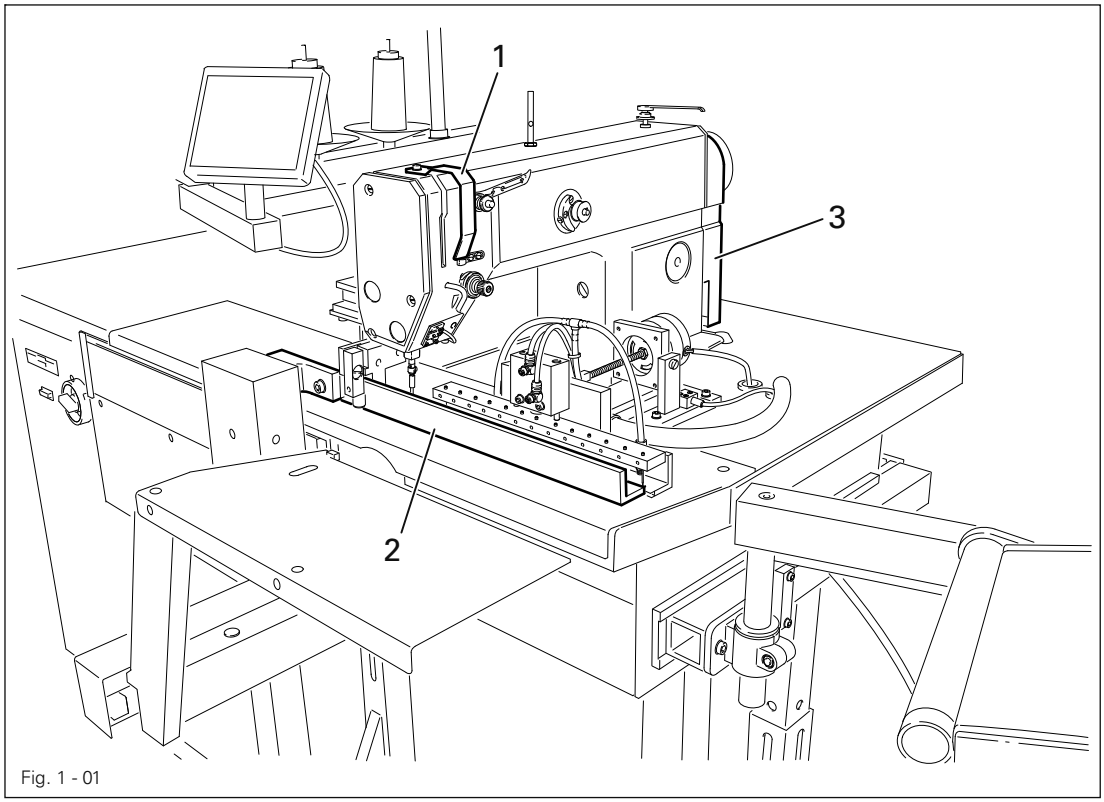

Fig. 1 - 01

Do not operate the machine without its take-up lever guard **1**!
Danger of injury due to the motion of the take-up lever!

Do not place fingers under the pressure bar **2**!
Danger of crushing by the descending pressure bar **2**!

Do not operate the machine without machine cover **3**!
Danger of injury from moving parts!

Register 02

2 Proper use

The PFAFF **3586-12/02**, **-13/01** and **-13/02** are mechanised sewing units for sewing darts and waistband pleats with or without a basting seam.



Any and all uses of this machine which have not been approved of by the manufacturer are considered to be inappropriate! The manufacturer cannot be held liable for any damage caused by the inappropriate use of the machine! The appropriate use of the machine includes the observance of all operational, adjustment, maintenance and repair measures required by the manufacturer!

3 Specifications▲

Stitch type: 301
Max. sewing speed: ..... 4500 s.p.m.
Stitch length: ..... 1.0 - 3.0 mm

Basting stitch length:
(This value is calculated automatically and cannot be set) ..... 6,0 - 9,0 mm

Needle system: ..... 134 KK
Needle size (Nm) in 1/100 mm: ..... 80 - 100

Dart length:
3586-12/02 ..... 9 - 250 mm
3586-13/01, -13/02 ..... 9 - 300 mm

Dart depth:
Up to a dart length of 80 mm ..... 30 mm
From a dart length over 80 mm ..... 37 mm

Pleat length:
3586-12/02 ..... 9 - 250 mm
3586-13/01, -13/02 ..... 9 - 300 mm

Pleat depth: ..... 3 - 70 mm

Working height: ..... 760 - 1140 mm

Motor speed: ..... 200 - 4500 min^{-1}

Power requirement: ..... approx. 1200 VA
Connection voltage: ..... 230 V ± 10%, 50/60 Hz, A/CMin. working
Leakage current ..... ≤ 5 mA◆
pressure: ..... 6 bar

Ambient temperature
85% rel. humidity (condensation not permitted): ..... 5 – 40° C

Noise data
Emission sound pressure level at the workplace
at a sewing speed of 4500 spm ..... L_{pA} < 81 dB(A)■
(Noise measurement in acc. with DIN 45 635-48-A-1, ISO 11204, ISO 3744, ISO 4871)

Machine dimensions:
Length: ..... 1250 mm
Width: ..... 850 mm
Height (without reel stand): ..... 1040 - 1420 mm

Weight: ..... 135 kg

▲ Subject to alteration

◆ Due to the use of network filters there is a nominal leakage current of ≤ 5 mA.

■ K_{pA} = 2,5 dB

4 Disposal of Machine

- Proper disposal of the machine is the responsibility of the customer.
- The materials used for the machine are steel, aluminium, brass and various plastic materials. The electrical equipment comprises plastic materials and copper.
- The machine is to be disposed of according to the locally valid pollution control regula-tions; if necessary, a specialist ist to be commissioned.



Care must be taken that parts soiled with lubricants are disposed of separately according to the locally valid pollution control regulations!

5 Transportation, packing and storage

5.01 Transportation to customer's premises

The machines are delivered completely packed.

5.02 Transportation inside the customer's premises

The manufacturer cannot be made liable for transportation inside the customer's premises nor to other operating locations. It must be ensured that the machines are only transported in an upright position.

5.03 Disposal of packing materials

The packing materials of this machine comprise paper, cardboard and VCE fibre. Proper disposal of the packing material is the responsibility of the customer.

5.04 Storage

If the machine is not in use, it can be stored as it is for a period of up to six months, but It should be protected against dust and moisture.
If the machine is stored for longer periods, the individual parts, especially the surfaces of moving parts, must be protected against corrosion, e.g. by a film of oil.

6 Explanation of symbols

In this instruction manual, work to be carried out or important information is accentuated by symbols. These symbols have the following meanings:



Note, information



Cleaning, care



Lubrication

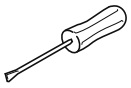

Maintenance, repairs, adjustment, service work
(only to be carried out by technical staff)

7 Control elements

7.01 On/off switch

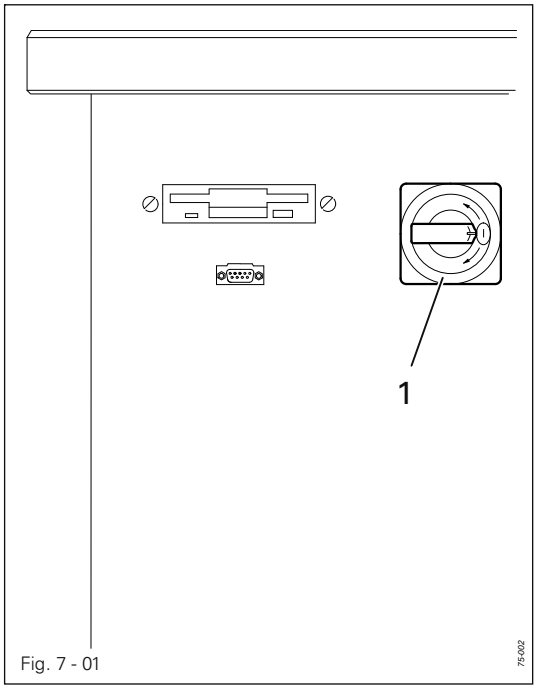

Fig. 7 - 01

- By turning switch **1** the machine's power supply is switched on or off.

7.02 Bundle clamp switch (optional)

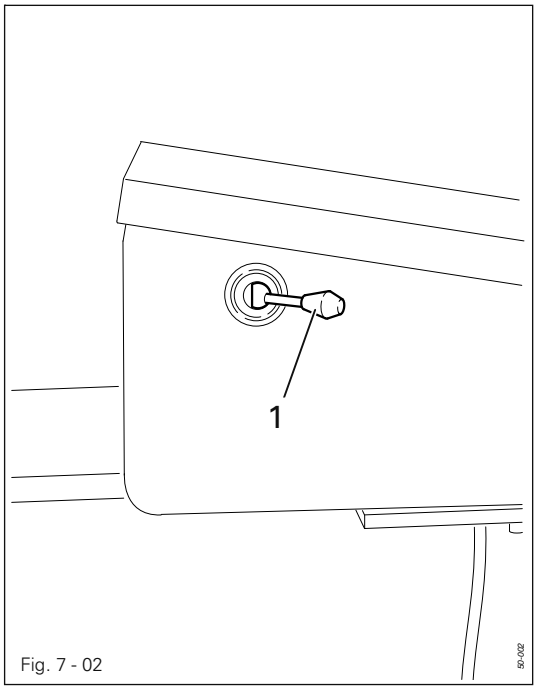

Fig. 7 - 02

- The bundle clamp can be opened or closed with switch **1**.

The bundle clamp is not part of the standard equipment of the machine.

7.03 Control panel

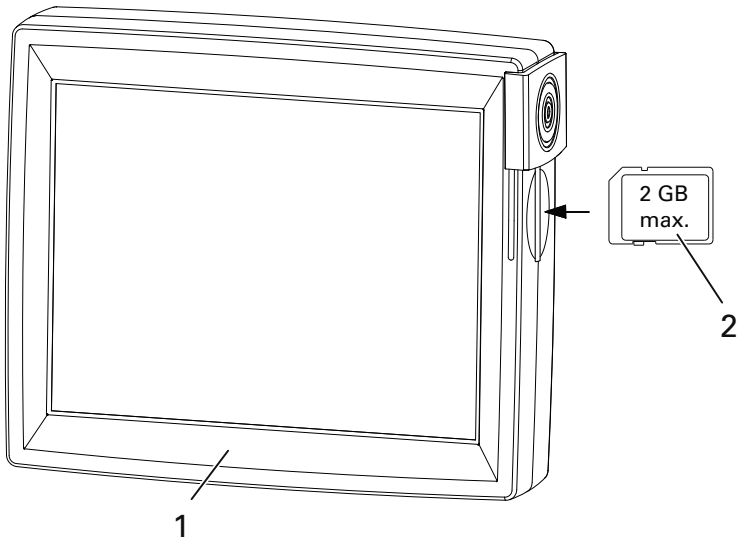

Fig. 7 - 03

The current operating conditions are displayed on control panel 1. Operation takes place in a constant dialogue between the control unit and the operator. For this purpose, depending on the operating condition of the machine, different symbols and/or texts are displayed. If the symbols or texts are framed, these show functions which can be selected by pressing the appropriate position on the monitor. By pressing the corresponding function this is carried out or switched on or off immediately, or a further menu appears, e.g. for entering a value. Activated functions are shown with inverted symbols. Unframed symbols or texts are only used for display purposes and cannot be selected by pressing.
To read sewing programs or install machine software, use the sd-card 2 in the control panel.

Description of the functions

Normal symbol = function switched off (inactive)

Inverted symbol = function switched on (active)

8 Installation and commissioning

After unpacking the machine, check it for any transport damage. In case of damage, inform the shipping company and the responsible PFAFF dealer.

The machine must only be installed and commissioned by qualified personnel!
All relevant safety regulations must be observed!

8.01 Installation

The site where the machine is installed must be provided with power connections (see Chapter 3, Specifications).
It must be ensured that the standing surface of the machine site is firm and horizontal, and that sufficient lighting is provided for.

For packing and transportation reasons the table top is in the lowered position. The table height is adjusted as described below.

8.01.01 Adjusting the table height

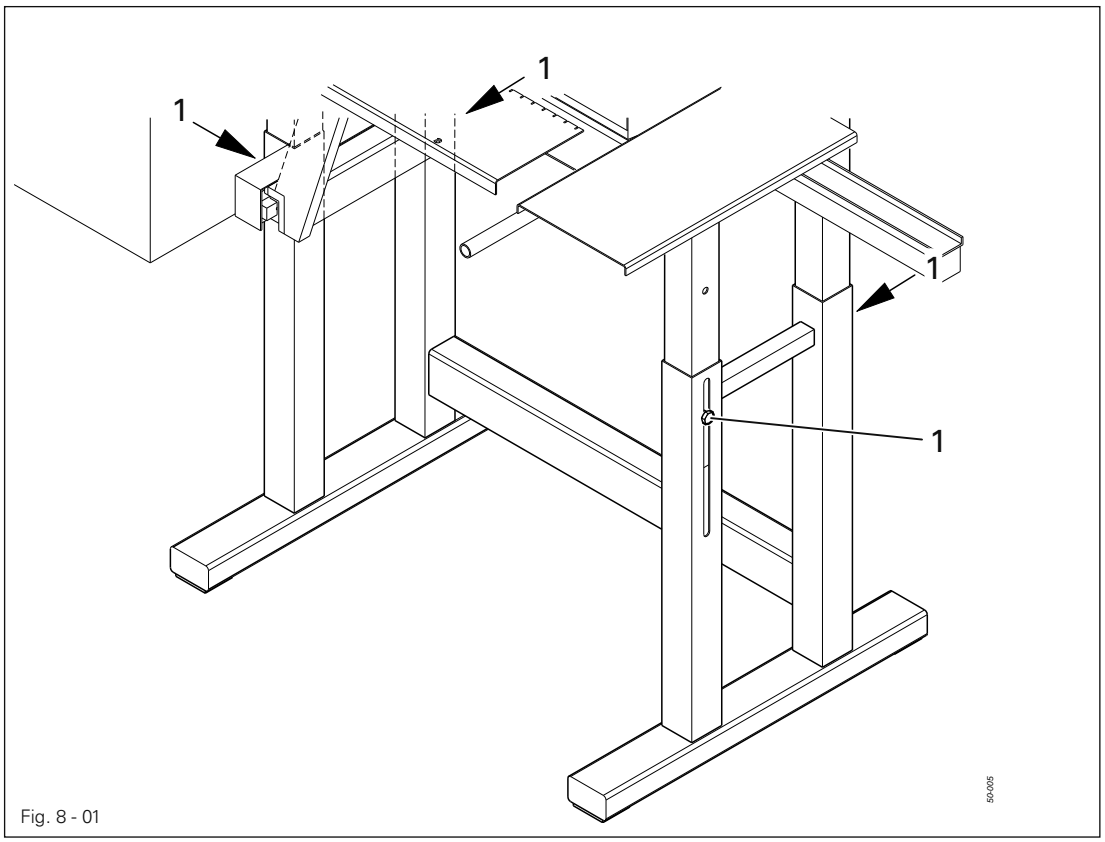

Fig. 8 - 01

- Loosen screws 1 and adjust table to required height.
- Well tighten screws 1 again.

8.01.02 Assembling and fitting the reel stand

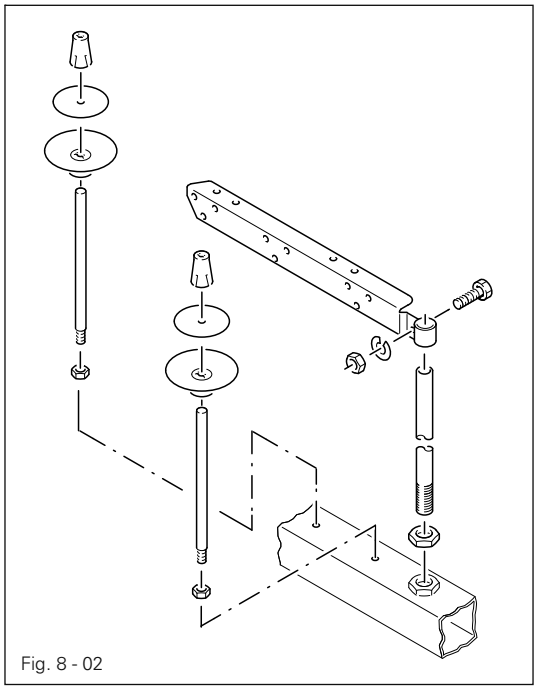

Fig. 8 - 02

- Assemble the reel stand as shown in Fig. 8-02.

8.01.03 Fitting the bundle clamp (optional)

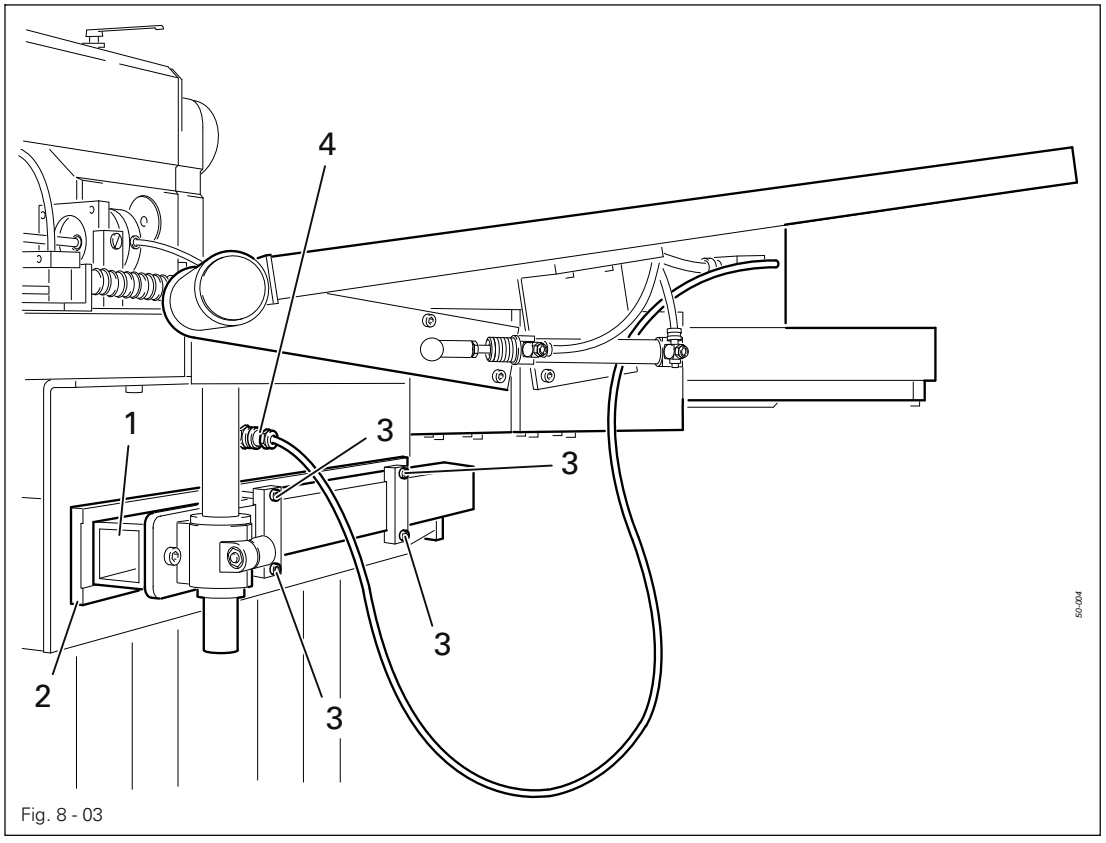

Fig. 8 - 03

- Insert bundle clamp with square bar 1 into the guide unit 2.
- Tighten screws 3.
- Plug in plug 4.

8.02 Commissioning

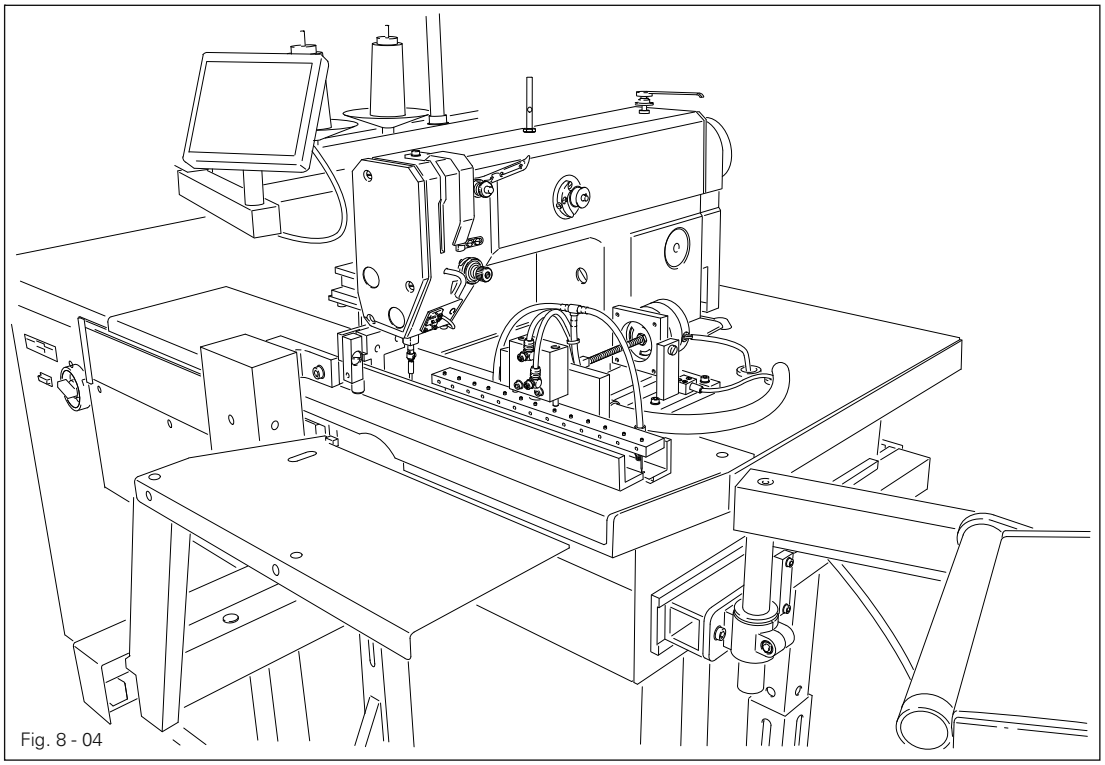

Fig. 8 - 04

- Before commissioning the machine, clean it thoroughly and lubricate it, or fill in oil, see Chapter **12 Care and maintenance**!
- Check the machine, particularly its electrical wiring and pneumatic tube connections, for any damage.
- Have skilled personnel check if the machine can be operated with the available mains voltage.



Do not operate the machine if there is any discrepancy.



Die Maschine darf nur an eine geerdete Steckdose angeschlossen werden!

- Connect the machine to the compressed air system.
  The manometer must display a pressure of **6** bar. If necessary, set to the correct value (see Chapter **12.06 Checking/regulating air pressure)**.

8.03 Switching the machine on/off

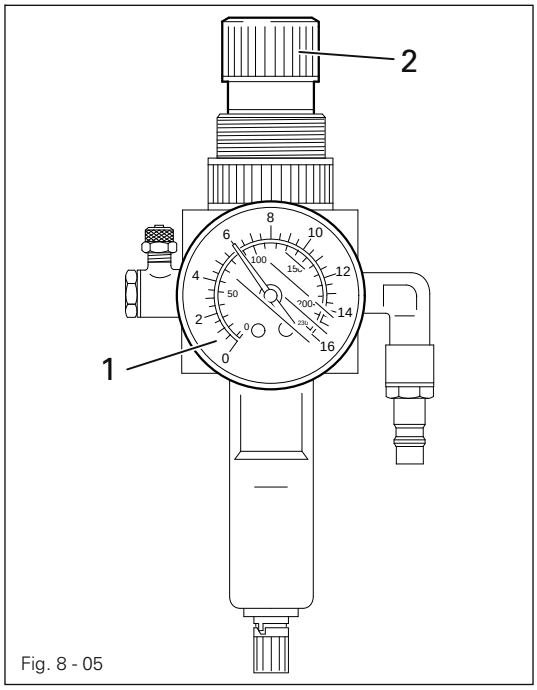

Fig. 8 - 05

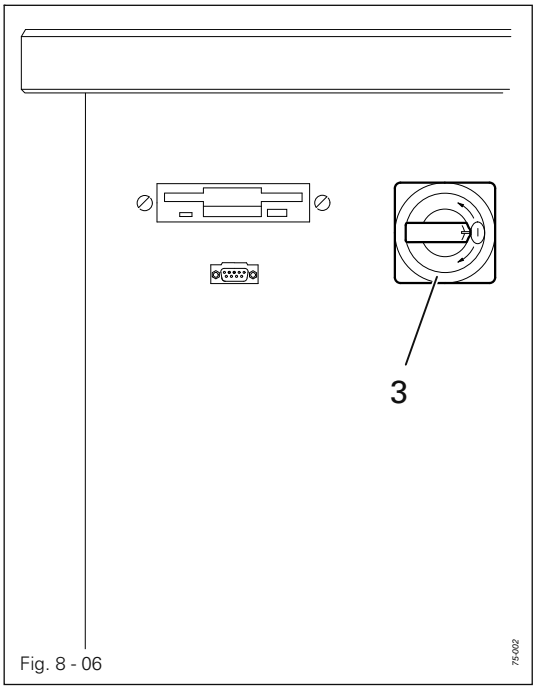

Fig. 8 - 06

Switching the machine on

- Check air pressure on pressure gauge **1** and, if necessary, adjust air pressure with adjusting knob **2**.
- Turn main switch **3** to position "I".

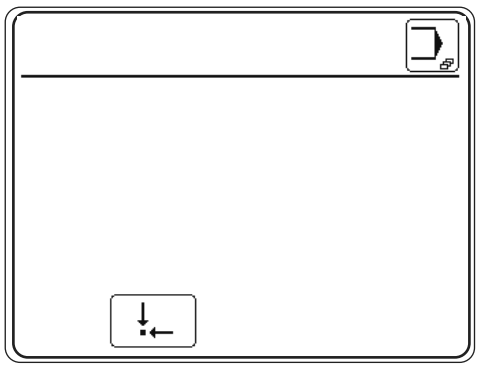

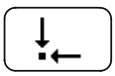

- After turning on the main switch, move the machine to its basic position to confirm the switch-on operation.
- Carry out a test run, see Chapter **10 Sewing.**



When commissioning the machine, the zero points must be checked or adjusted

Switching the machine off

- To switch off the machine, turn main switch **3** to position "**0**".

Description of other functions on the display



This function is used to call up the input mode, see Chapter **11 Input**.

8.04 Selecting the language and units

- Switch on the machine.



- Call up the input menu.

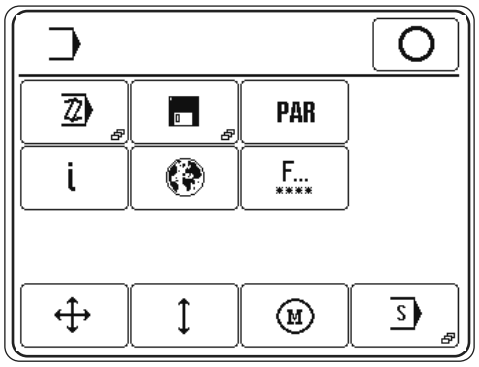



- Call up the settings menu.

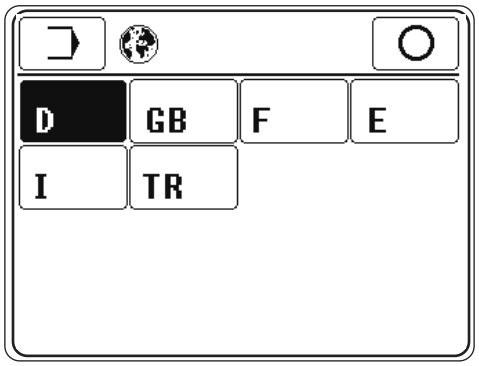

- Select the appropriate language.

8.05 Adjusting the control panel

- Switch on the machine.



- Call up the input mode.

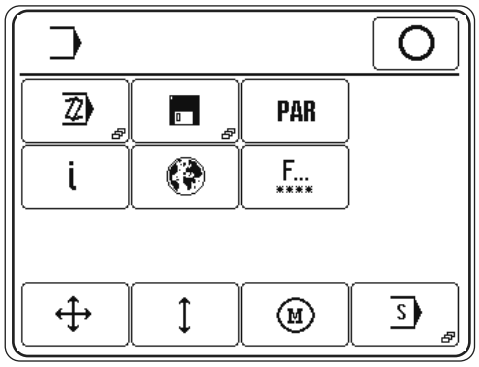

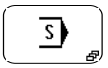

- Select the service menu.

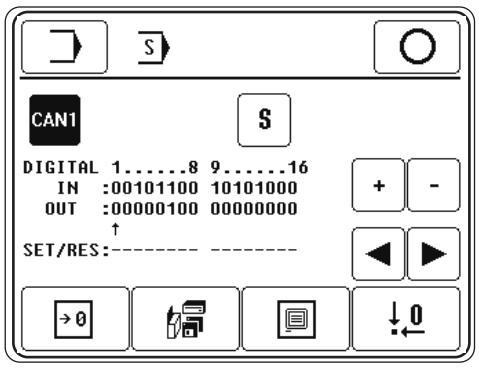



- Select control panel functions.

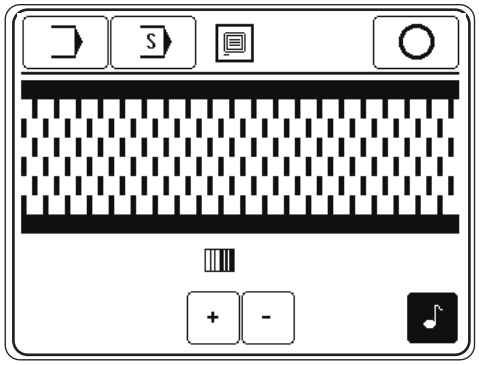

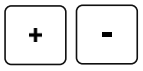

- Change the display contrast.



- Switch the key tone off or on.



Never reduce the display contrast to the extent, that the display can no longer be read!



- Conclude the input.

8.06 Adjusting the zero points of the drive units for the X and Y axis.

Requirement

1. The guide rollers of the Y-drive and the piston rod of the X-drive must fit into the corresponding openings of adjustment gauge **2**.
2. When the balance wheel is turned, adjustment pin **1** must plunge into the corresponding hole of adjustment gauge **2**.

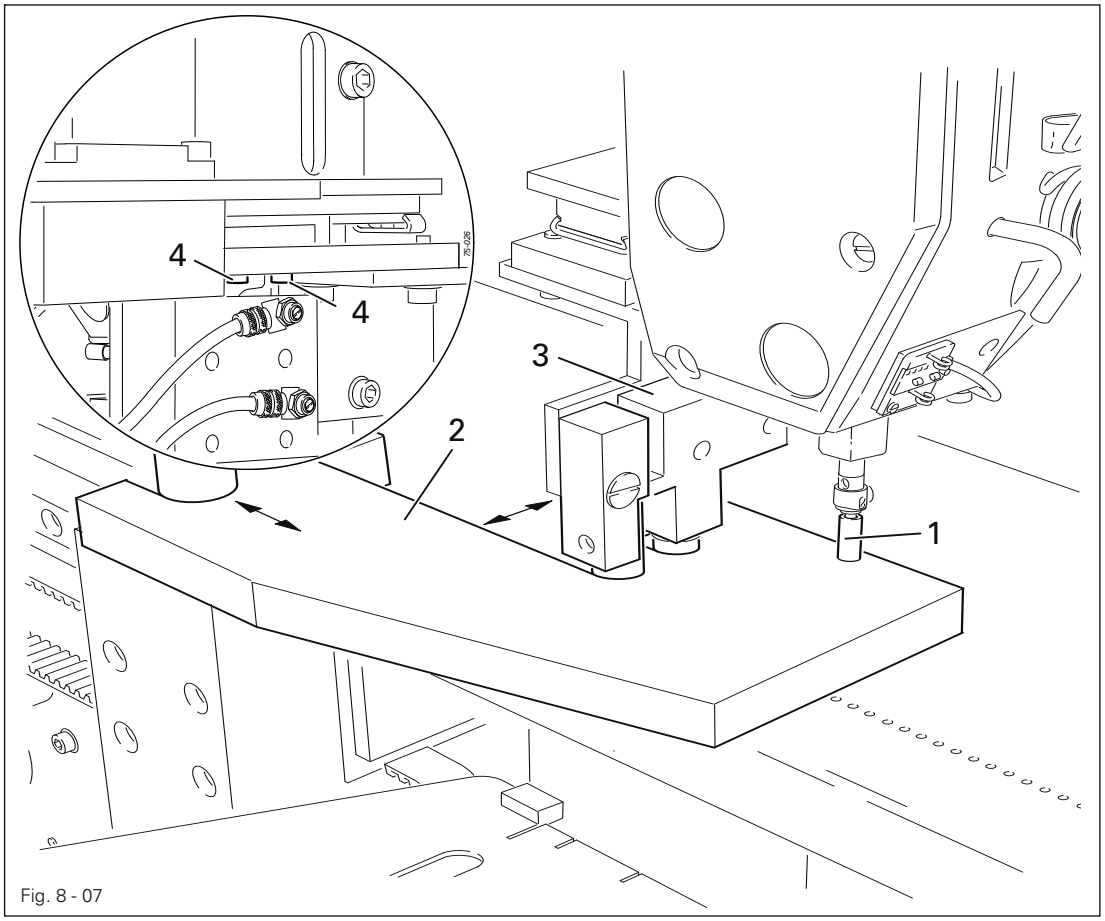

Fig. 8 - 07

- Switch on the machine.



- Call up the input menu.

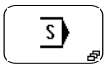

- Call up the service menu.

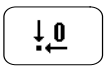

- Call up the menu for adjusting the zero points.

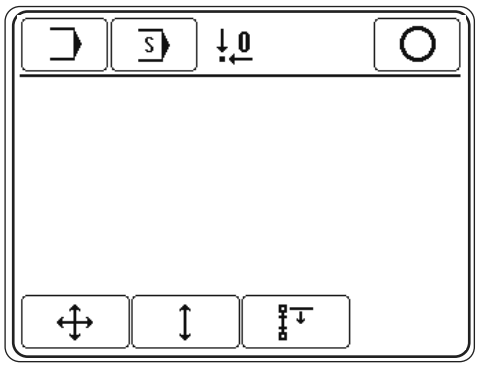

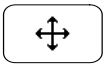

- Call up the "carriage position" function.

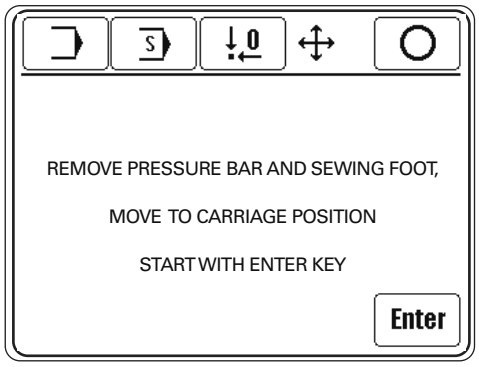

Enter

- Remove the pressure bar and sewing foot and move to the carriage position.

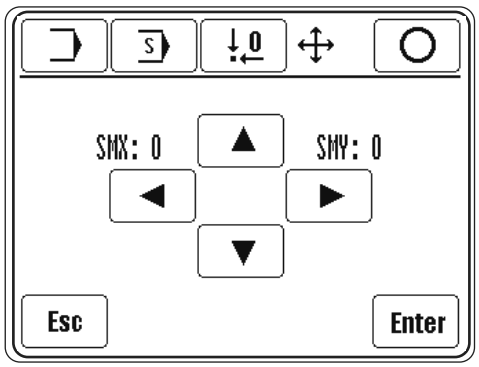

- Remove the needle, insert adjustment pin 1 in the needle bar and move the adjustment gauge 2 down onto the cover plate.

Enter

- Using the corresponding arrow symbols, move the stepping motors in accordance with the requirements and take over the setting with the enter key.

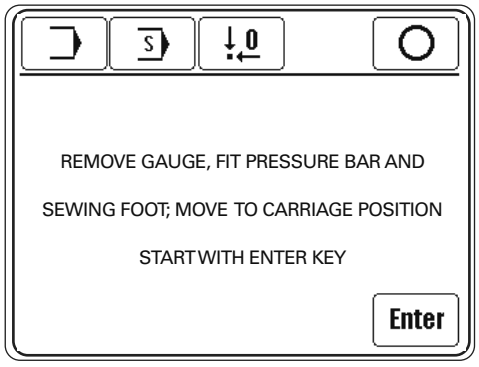

- If necessary, loosen screws 4 and align support 3 of the guide rollers in accordance with requirement 1.
- Tighten screws 4
- Remove adjustment pin 1 and adjustment gauge 2.
- Refit the pressure bar and sewing foot.

8.07 Adjusting the zero point of the take-over unit

Requirement
The extended needle strip **1** should be parallel to and at a distance of **3 mm** from pressure bar **2**.

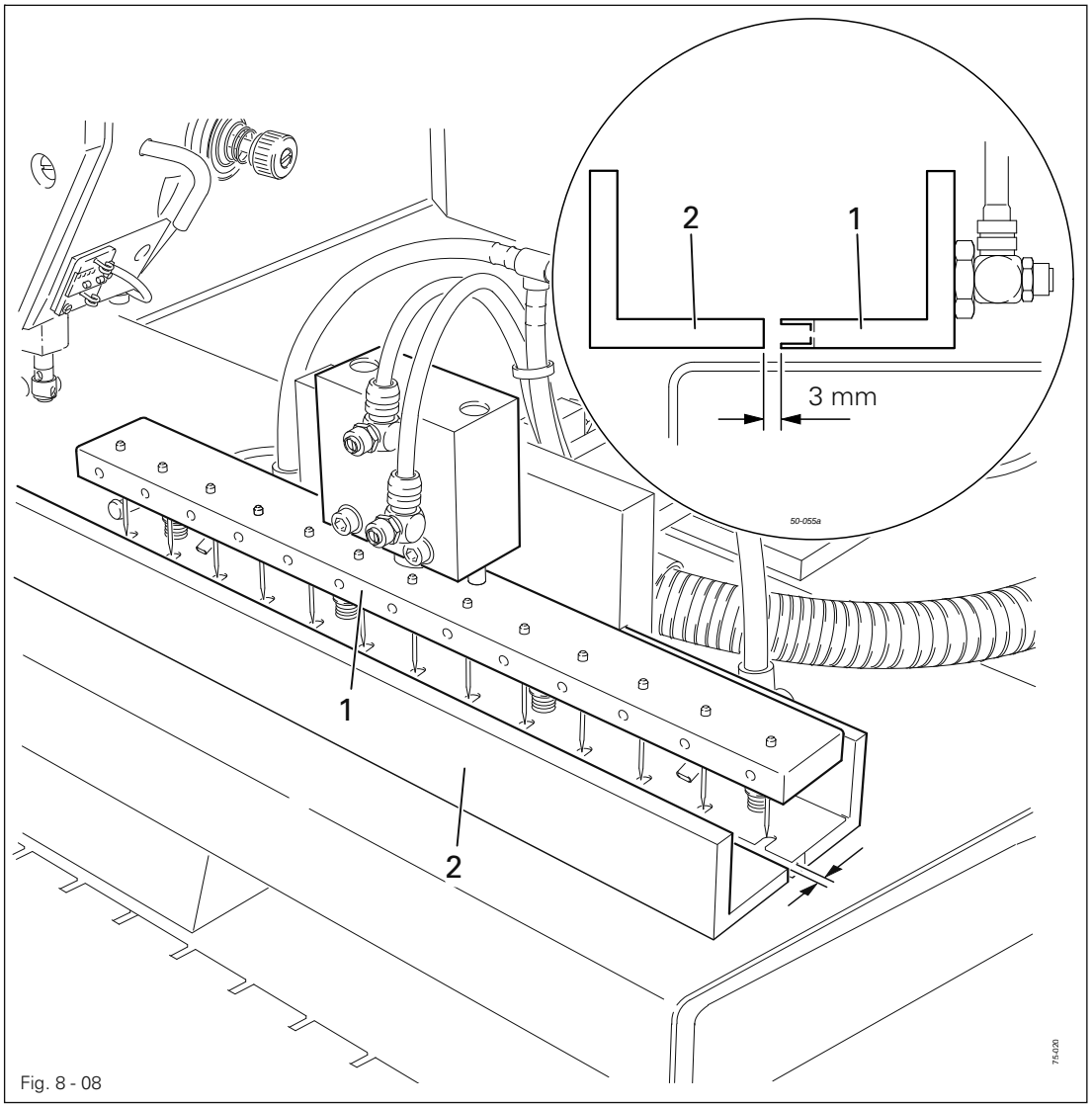

Fig. 8 - 08

- Call up the menu for adjusting the zero points.
- Call up the "depth" function

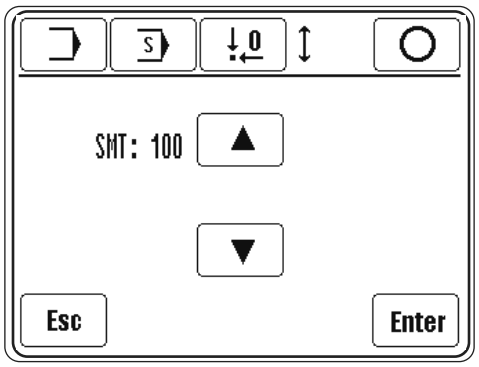

Enter

- Using the needle symbols, move the needle strip 1 in accordance with the requirement and take over the setting with the enter key.

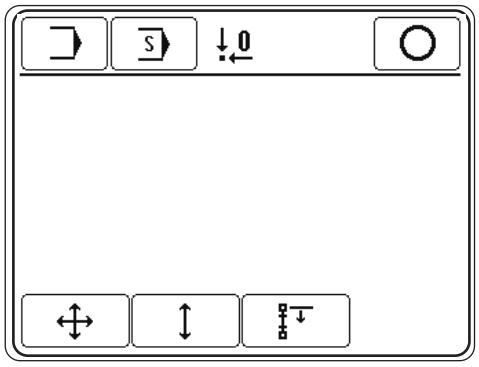

8.08 Setting the correction of the starting point

Requirement
1. On seams without start backtacks, the first stitch should be located securely in the workpiece.
2. On seams with start backtacks, the first bartack should be located securely in the workpiece.

- Call up the menu for adjusting the zero points.

- Call up the "correction value for the starting point" function.

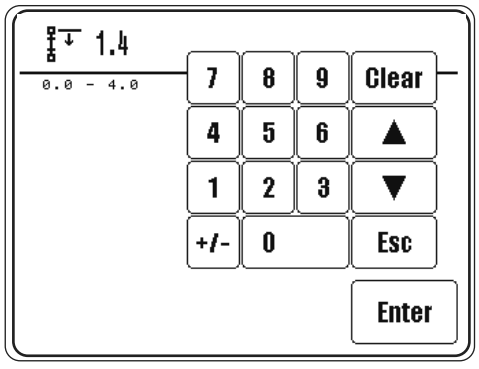

Enter

- Enter the correction value on the number panel and conclude the input with "enter".

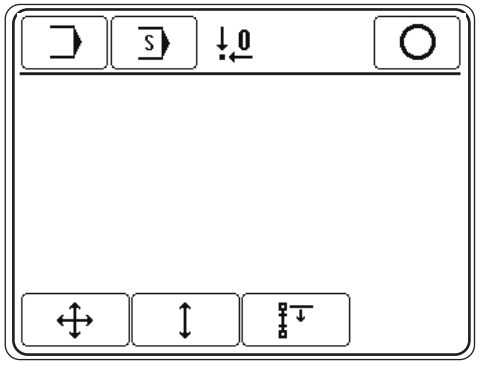

- Check that the needle is in its t.d.c. position.
- If necessary, adjust the needle position with the "needle position" function, see Chapter 13.10 Sewing motor adjustments.



- Conclude the input of the zero points.

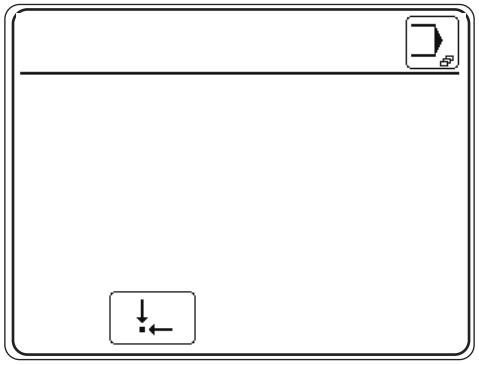

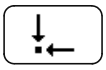

- Move to the basic position, the machine is ready for operation.

Register 05

9 Preparation

All regulations and instructions in this Instruction Manual are to be observed! Special attention is to be paid to the safety regulations!

All preparation work is only to be carried out by appropriately trained personnel!

9.01 Inserting the needle

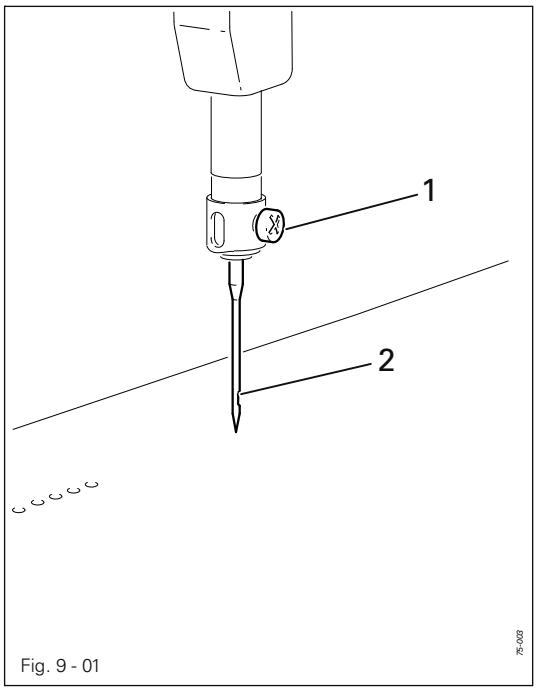

Fig. 9 - 01

Only use needles from the system intended for the machine, see Chapter **3 Specifications.**

- Switch on the machine.
- Call up the threading aid function.
  The pressure bar moves out of the needle area, the sewing foot is lowered and the sewing start is locked.
- Loosen screw **1** and insert needle **2** as far as possible into the needle bar.
- Align needle **2** so that the long needle groove is facing the carriage guide, and tighten screw **1**.
- Start the sewing cycle

or

- Move the machine to its basic position.

9.02 Threading the needle thread /adjusting the needle thread tension

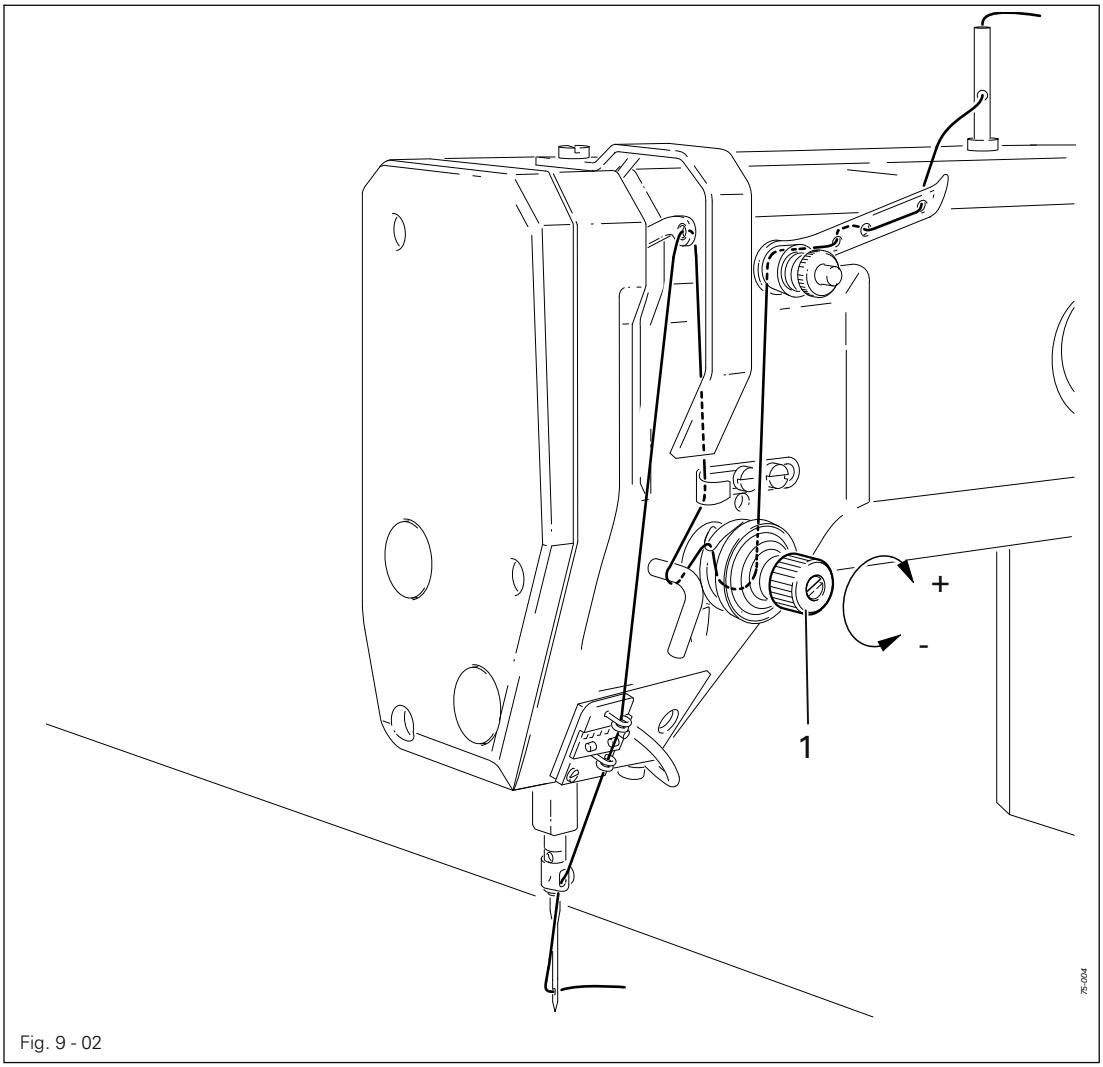

Fig. 9 - 02

- Switch on the machine.
- Call up the threading aid function.
  The pressure bar moves out of the needle area, the sewing foot is lowered and the sewing start is locked.
- Thread needle thread as shown in Fig. 9-02.
- Adjust the needle thread tension by turning the knurled screw 1.
- Start the sewing cycle

or

- Move the machine to its basic position.

9.03 Unterfaden aufspulen / Unterfadenvorspannung regulieren

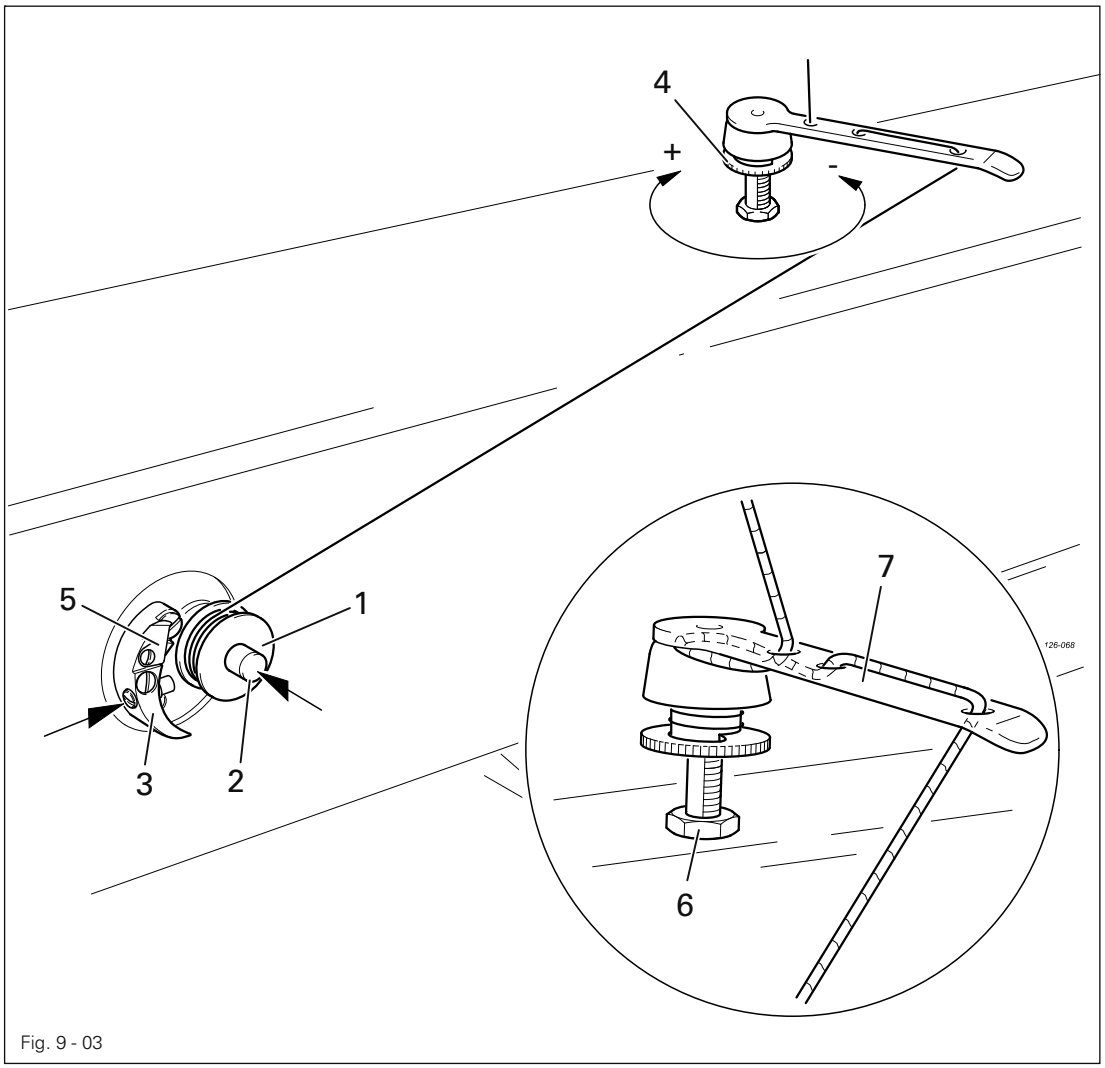

Fig. 9 - 03

- Switch on the machine.
- Place an empty bobbin **1** onto bobbin shaft **2**.
- Thread the bobbin in accordance with Fig. **9-03** and wind it anti-clockwise around bobbin **1** a few times.
- Switch on the bobbin winder while at the same time pressing bobbin winder spindle **2** and lever **3**.

The bobbin **1** fills up during sewing.

- The tension of the thread on bobbin **1** can be adjusted with knurled screw **4**.
- The bobbin winder stops automatically when bobbin **1** is full.
- Remove the filled bobbin **1** and cut the thread on knife **5**.

If the thread is wound unevenly, loosen nut **6** and turn thread guide **7** accordingly. Retighten nut **6** after the adjustment
To adjust the filling capacity, see Chapter **13.06.07 Bobbin winder**.

9.04 Changing the bobbin / adjusting the bobbin thread tension

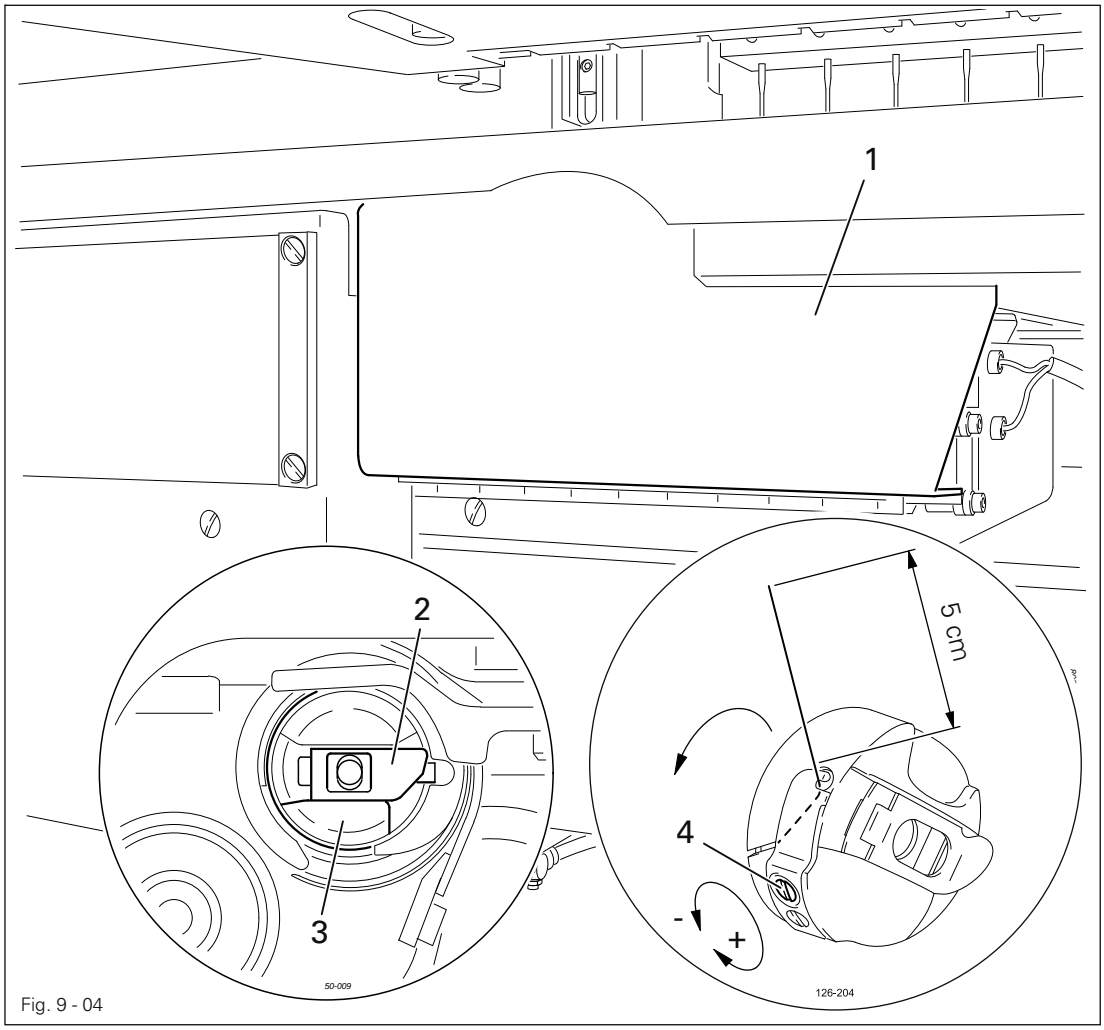

Fig. 9 - 04

- Switch on the machine.
- Call up the threading aid function.
  The pressure bar moves out of the needle area, the sewing foot is lowered and the sewing start is locked.
- Open flap 1.
- Raise latch 2 and remove the bobbin case 3 together with the bobbin.
- Insert the filled bobbin into the bobbin case 3 so that the bobbin turns in the direction of the arrow when the thread is pulled out.
- Through the slot pull the thread under the spring as shown in Fig. 9-04.
- Adjust the bobbin thread tension by turning screw 4.
- Raise latch 2 and insert the bobbin case 3 together with the bobbin in the hook.
- Release latch 2 and press the bobbin case into the hook until you feel it lock into place.
- Close flap 1.
- Start the sewing cycle

or

- Move the machine to its basic position.

9.05 Adjusting the height of the sewing foot

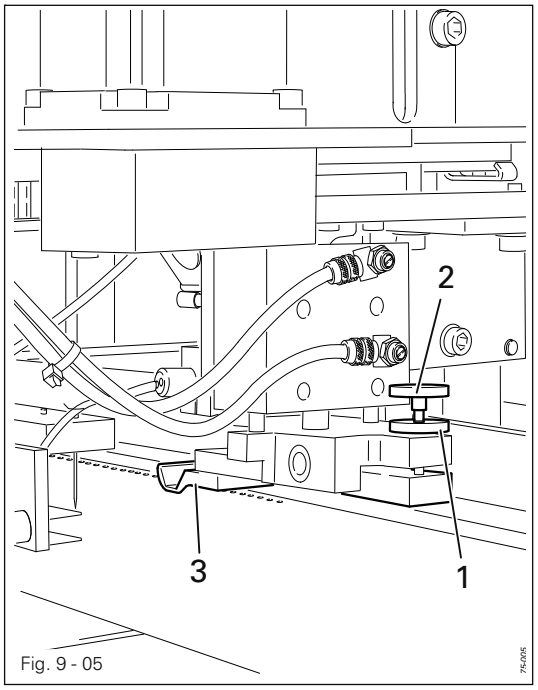

Fig. 9 - 05

The sewing foot height is adjusted correctly when the sewing foot is positioned (suspended) slightly above the workpiece.

- Loosen counter screw **1** and adjust the presser foot **3** to the material thickness by turning milled screw **2**.
- Tighten counter screw **1** again.

9.05 Selecting the program number

- Switch on the machine.

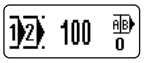

- Call up the program number input menu.

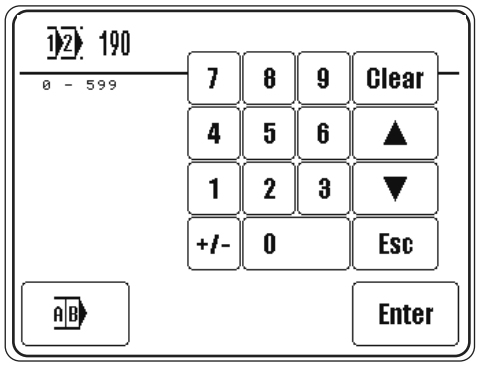

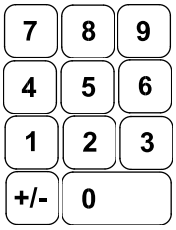

- Select the desired program number (0 – 599) using the number block.



- Confirm the selection and quit the selection menu.

Description of the other functions



Clear
This function sets the value at "0".



Arrow keys
These functions increase or reduce the value.



Esc
This function stops the input without taking over the value entered.



Sequence selection
This function opens the menu for selecting or configuring the sequence, see Chapter 9.06 Selecting / configuring the sequence.

9.06 Selecting / configuring a sequence

9.06.01 Selecting a sequence

Instead of selecting a program number, it is also possible to select a corresponding sequence, providing that individual seam programs have been allocated to a sequence, see Chapter **9.06.02 Configuring a sequence**

- Switch on the machine.

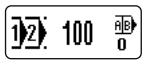

- Call up the menu for entering the program number.



- Call up the menu for entering the sequence.

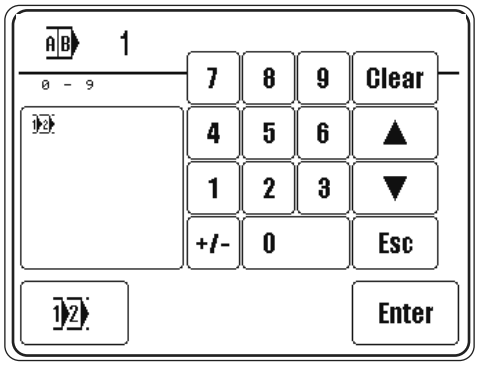

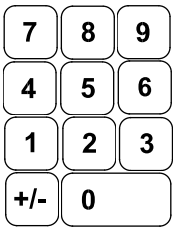

- Select the desired sequence number (**0** – **9**) using the number block.



- Confirm the selection and quit the selection menu.

Description of the other functions



Clear
This function sets the value at "**0**".



Arrow keys
These functions increase or reduce the value.



Esc
This function stops the input without taking over the value entered.

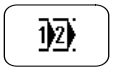

Program selection
This function opens the menu for selecting a program, see Chapter **9.05 Selecting a program number.**

9.06.02 Configuring a sequence

Up to 8 seam programs can be allocated to a sequence. During sewing the seam programs of a selected sequence appear as a function on the display and can be selected directly.

- Call up the menu for entering the sequence and select the desired sequence number without leaving the selection menu, see 9.06.01 Selecting a sequence.

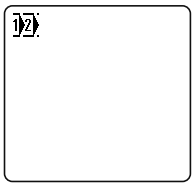

- Call up the sequence programming function.

- Configure the sequence from existing seam programs by entering the program numbers on the number block.

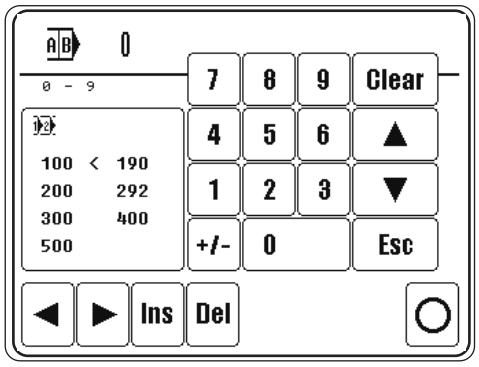

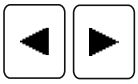

- The cursor in the window shows, which seam program has been taken out of the group, or at which position a new seam program has been inserted. The cursor is moved with the arrow keys.



- If applicable, insert (INS) the seam program at the current cursor position, or delete (DEL) the marked seam program from the sequence.



- Conclude the sequence programming function.

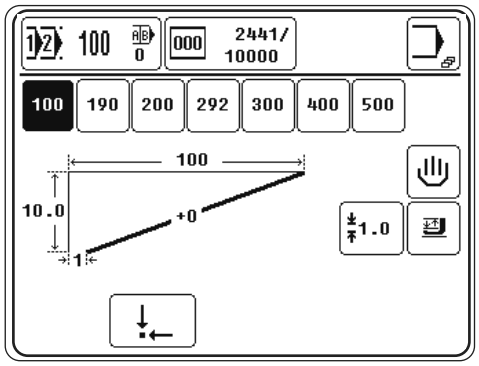



To enable, for example, quicker access to up to 8 different seam programs, the function for automatic switching to the next seam program of a sequence function can be switched off with parameter "109", see Chapter 13.11.02 List of parameters.

9.07 Adjusting the bobbin thread stitch counter

- Switch on the machine.



- Call p the menu for entering the number of bobbin thread stitches.

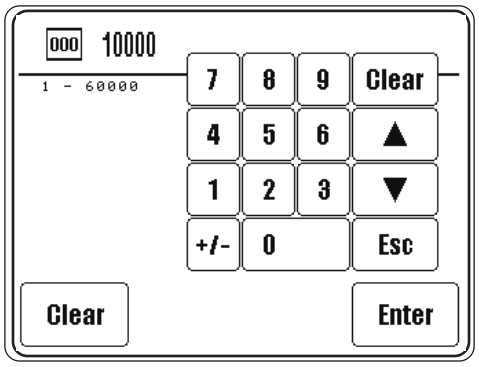

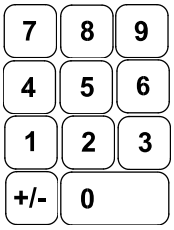

- Enter the number of stitches on the number block.



- Conclude the input.



After the number of set bobbin stitches have been sewn, the machine stops automatically for a bobbin change.

Description of the other functions



Clear (in number block)
This function sets the value at "0".



Arrow keys
These functions increase or reduce the value.



Esc
This function stops the input without taking over the value entered.

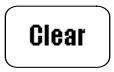

Clear (in the bottom row)
This function sets the bobbin thread counter (number of stitches sewn) at "0".

10 Sewing



The machine may only be operated by appropriately instructed personnel! The operating staff must make sure that only authorized persons are in the danger area of the machine!

In particular for the production, in addition to the input mode, see Chapter **11 Input**, the sewing mode is available. Here, depending on the program selection and the machine status, all relevant functions and settings for the production are shown on the display. Automatic operation is standard, but it is possible to switch to manual operation when setting up and checking operating sequences.

Before production the following conditions must be fulfilled:

- All safety devices must be attached and all covers closed see, Chapter **1.06 Danger warnings**.
- The machine must be properly installed and commissioned in accordance with Chapter **8 Installation and commissioning**.
- All setting-up work must have been carried out, see Chapter **9 Setting-up**

10.01 Sewing with automatic program start

- Switch on the machine.
- Select the desired program number, see Chapter 9.05 Selecting the program number.

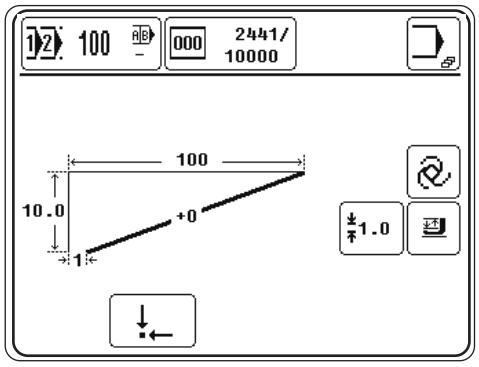

- Insert the workpiece.
- Start the program cycle by inserting the loading table.

Description of the functions

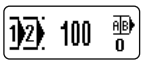

Program number selection
This function opens the menu for entering the program number. The current program number is shown in the symbol.

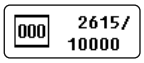

Bobbin thread stitch counter
This function opens the menu for entering and resetting the number of stitches for the bobbin thread, see Chapter 9.07 Setting the bobbin thread counter.



Input menu
This function is used to call up the "input mode", see Chapter 11 Input.



Status display Manual sewing / Automatic sewing
Depending on the machine status, one of these two symbols is displayed. This function is used to change the operating mode.



Material thickness correction
This function opens the menu for entering the correction of the material thickness. The current value is shown in the symbol.



Threading aid
This function is used to raise or lower the sewing foot. In addition the thread clamp is opened or closed. This only appears in the basic position or when sewing stops during the seam.



Basic position
This function is used to move the machine to its basic position.

By clicking on the seam pattern, the values of the seam pattern and start backtack or condensed stitches can be changed.

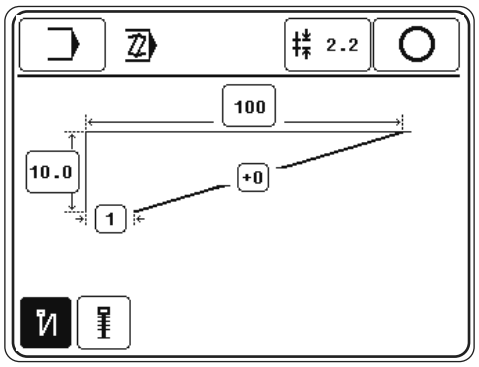

10.02 Sewing with manual program start

- Switch on the machine.
- Select the desired program number, see Chapter 9.05 Selecting the program number.

- Call up the manual sewing function.

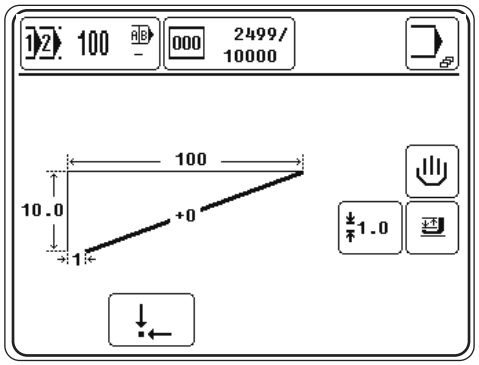

- Insert the workpiece.
- Insert the loading table.

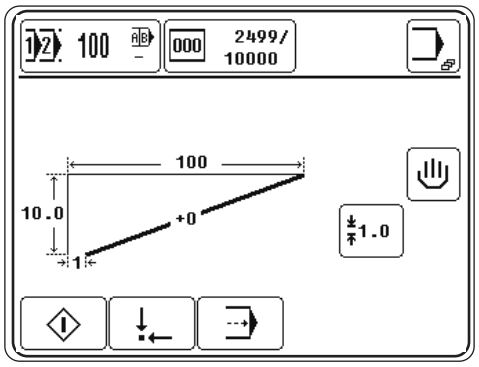

Description of the functions

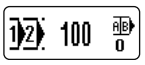

Program number selection
This function opens the menu for entering the program number. The current program number is shown in the symbol.

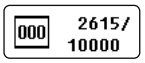

Bobbin thread stitch counter
This function opens the menu for entering and resetting the number of stitches for the bobbin thread, see Chapter **9.07 Setting the bobbin thread counter**.



Input menu
This function is used to call up the "input mode", see Chapter **11 Input**.



Status display Manual sewing / Automatic sewing
Depending on the machine status, one of these two symbols is displayed. This function is used to change the operating mode.



Material thickness correction
This function opens the menu for entering the correction of the material thickness. The current value is shown in the symbol.



Start
This function is used to start the sewing cycle.



Basic position
This function is used to move the machine to its basic position.



Tacting
This function is used to tact to the seam pattern. After the seam pattern has been reached, further functions can be carried out.

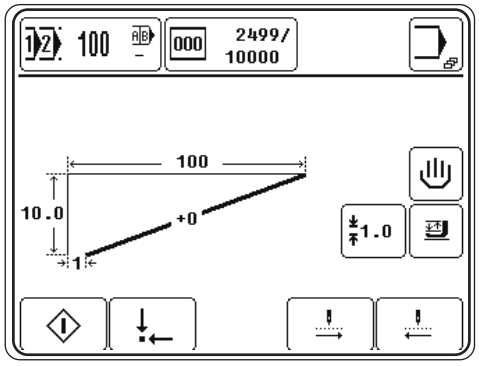



Tacting forwards
This function is used to move forwards in sections in the seam pattern tact for tact. The seam cycle is sewn automatically, if the function is pressed longer.



Tacting backwards
This function is used to move backwards in sections in the seam pattern tact for tact. The seam cycle is sewn automatically, if the function is pressed longer.



Foot up/down
This function is used to raise or lower the foot.

Machine running (in program cycle)

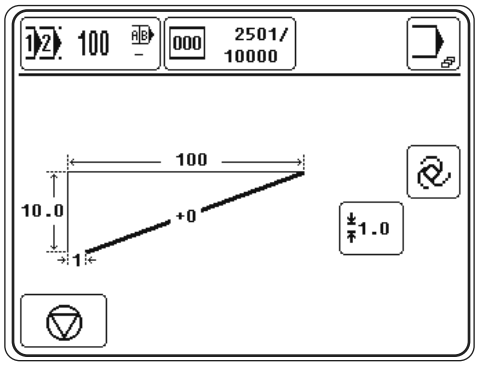



Stop

This function is used to stop the program cycle.

If an intermediate stop is activated with parameter "**107**", there is an intermediate stop in the program cycle.

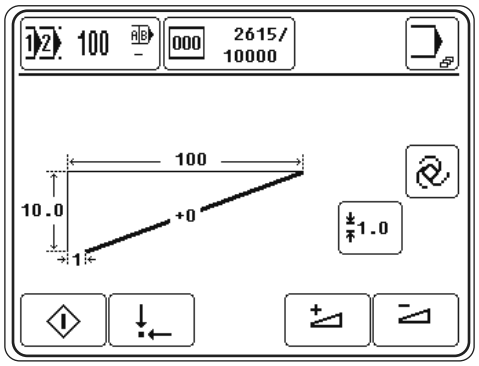



Before the machine start the penetration depth can be altered with the corresponding functions.

10.03 Sewing with sequences

When sewing with sequences, with parameter "109" it is possible to choose between automatic and manual forward switching, see Chapter 13.11.02 List of parameters.

- Switch on the machine.
- Select the desired sequence, see Chapter 9.06.01 Selecting a sequence.

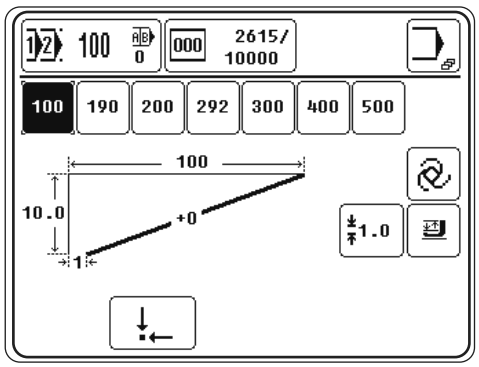

- Insert the workpiece.
- Insert the loading table.

Description of the functions

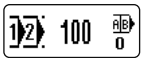

Program number selection
This function opens the menu for entering the program number. The current program number is shown in the symbol. If the automatic forward switching in the sequence function is activated, the sequence symbol is shown as inverse.

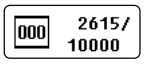

Bobbin thread stitch counter
This function opens the menu for entering and resetting the number of stitches for the bobbin thread, see Chapter 9.07 Setting the bobbin thread counter.



Input menu
This function is used to call up the "input mode", see Chapter 11 Input.



Individual programs
This function is dependent on the setting of parameter "114" (automatic forward switching in the sequence), see Chapter 13.11.02 List f parameters.
When the forward switching in the sequence function is activated (value "I"), this function displays the next individual program to be sewn as inverse.
When the forward switching in the sequence function is not activated (value "0"), this function is used for the quick selection of the high-lighted seam programs.



Status display Manual sewing / Automatic sewing
Depending on the machine status, one of these two symbols is displayed. This function is used to change the operating mode.



Material thickness correction
This function opens the menu for entering the correction of the material thickness. The current value is shown in the symbol.



Basic position
This function is used to move the machine to its basic position.

10.04 Program interruption



The program cycle can be interrupted by operating the "stop" function on the control panel.

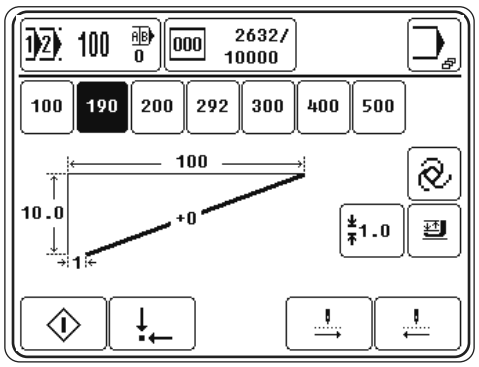



- Continue program cycle

10.05 Error messages

If a malfunction occurs, an error code appears on the display. An error message may be caused by incorrect operation, machine defects, as well as by overload conditions.
(For a description of the error codes see Chapter **14.02 Description of the error codes)**.

Errors when connecting outputs

If an error occurs when connecting an output, the output concerned is shown with the desired switching state (**0**) or (I).
In this case (**0**) means the output should be disconnected and (I) means that the output should be connected.
In the next line the cause leading to the error is displayed.
The target state for maintaining undisturbed operation is shown in brackets.
In the following example the output **Y5** is to be connected.
Requirement: Needle must be in upper position.

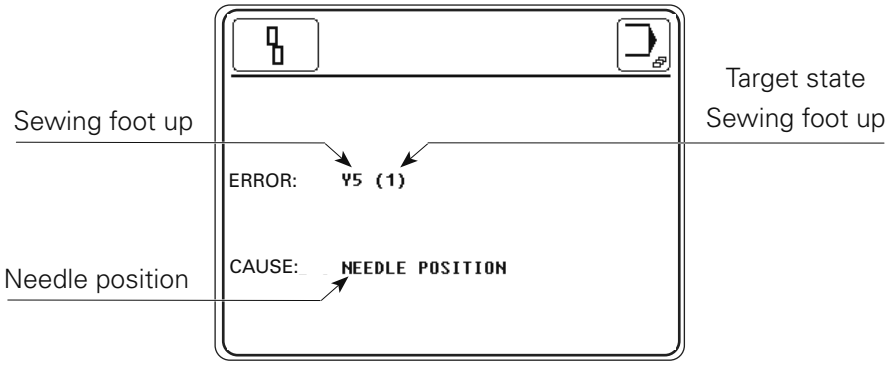

- Check needle position and eliminate error.

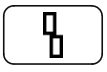

- Acknowledge elimination of the error..

11 Input

In addition to the functions for entering or altering seam programs, in the input mode there are functions for displaying information, for program management, for machine configuration and settings (country settings and access codes etc.), as well as for supporting service and adjustment work.
In the input mode the machine start function is blocked to avoid an unintentional start-up of the machine.

11.01 Overview of the functions in the input mode

- Switch on the machine.



- Call up the input mode.

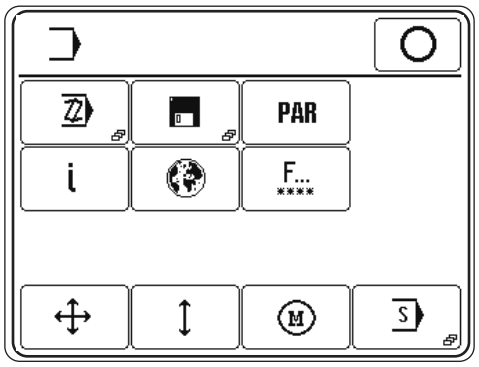

Description of the functions



Conclude input
This function is used to conclude the input, and the machines changes to the sewing mode.

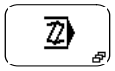

Seam program input
This function is used to call up the menu for entering or altering seam programs, see Chapter 11.02 Creating / altering seam programs.

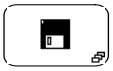

Program management
This function is used to manage the data from the machine memory and CD-Card, see Chapter 11.03 Program management.



Parameter settings
This function is used to call up the menu for altering parameter settings, see Chapter 13.11 Parameter settings.

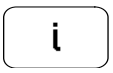

Info

This function opens a menu for displaying the following information:

- current software status of the machine
- current firmware status of the machine
- current firmware status of the control panel
- current firmware status of the main drive unit
- day piece counter
- operating hours meter
- production hours meter



The day piece counter can be reset with the "Clear" function.



Country settings

This function opens a menu for selecting the language shown on the control panel, see Chapter 8.05 Selecting the language and units.



Rights of access

This function opens a menu for fixing the rights of access, see Chapter 11.05 Rights of access.

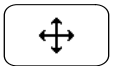

Stepping motors X-/Y-direction (carriage)

This function opens a menu for moving the carriage stepping motors.

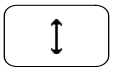

Stepping motors depth

This function opens a menu for moving the stepping motor for the depth.

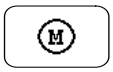

Sewing motor

This function opens a menu for testing and adjusting the sewing motor, see Chapter 13.10 Menu for the sewing motor.

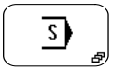

Service menu

This function is used to call up the menu for selecting various service functions, see Chapter 13.09 Service menu.

11.02 Creating / altering seam programs

In the seam program input function, the seam programs are created or altered on the touch-screen control panel. The seam type to be sewn and the corresponding program number are selected after the seam program input function has been called up.

Allocation of the additional seam functions to the seam type

	Dart 1	Dart 2	Pleat 1	Pleat 2	Basting stitch
Starttackl	pre - set	pre - set	pre - set	pre - set	not pos-sible
Stitch condensing seam start	optional	optional	optional	optional	pre - set
End tack	not pos-sible	not pos-sible	pre - set	not pos-sible	not pos-sible
Stitch conden-sing seam end	automatic	automatic	optional	automatic	pre - set
Angle seam end	automatic	automatic	not pos-sible	not pos-sible	not pos-sible
Basting stitch	not pos-sible	not pos-sible	optional	optional	not pos-sible

- Switch on the machine.
- Call up the input mode.
- Call up the seam program input function.

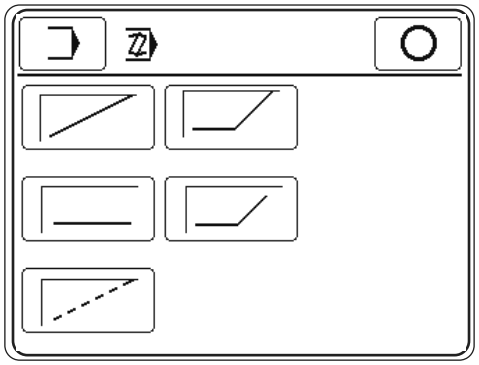

- Select the seam type.
- Enter the program number.
- Create or alter the seam program, see Chapter **11.03 Example of how to enter seam programs.**

Description of the functions

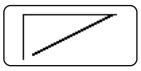

Dart 1
This function is used to call up the menu for entering dart 1, see Chapter **11.02.01 Dart 1**.

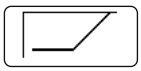

Dart 2
This function is used to call up the menu for entering dart 2, see Chapter **11.02.02 Dart 2**.

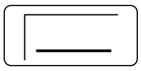

Waistband pleat 1
This function is used to call up the menu for entering waistband pleat 1, see Chapter **11.02.03 Waistband pleat 1**.

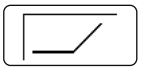

Waistband pleat 2
This function is used to call up the menu for entering waistband pleat 2, see Chapter **11.02.04 Waistband pleat 2**.

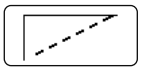

Basting seam 1
This function is used to call up the menu for entering a basting seam, see Chapter **11.02.05 Basting seam.**

11.02.01 Dart 1

- Switch on the machine.



- Call up the input mode.

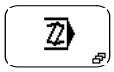

- Call up the seam program input function.

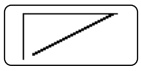

- Call up the menu for sewing dart **1**.
- Enter the program number

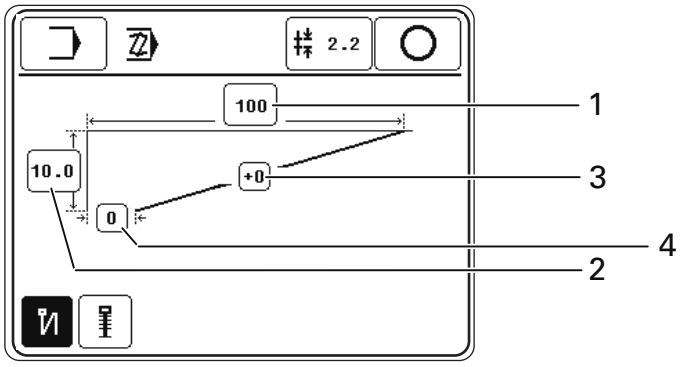

Description of the functions



Input
This function is used to enter the basic input status.



Stitch length
This function is used to call up the menu for the stitch length input.



Sewing
This function is used to conclude the seam program input and change to the sewing mode.

Dart length
Function **1** is used to enter the value for the dart length.

Dart depth
Function **2** is used to enter the value for the dart depth.

Curve
Function **3** is used to enter the value for the curve.

Starting point adjustment
Function **4** is used to enter the value for the adjusted starting point.



Start backtack
This function is used to activate the start backtacks.



Condensed start stitches
This function is used to activate the condensed start stitches.

11.02.02 Dart 2

- Switch on the machine.



- Call up the input mode.

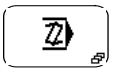

- Call up the seam program input function.

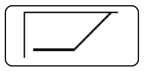

- Call up the menu for sewing dart 2.
- Enter the program number

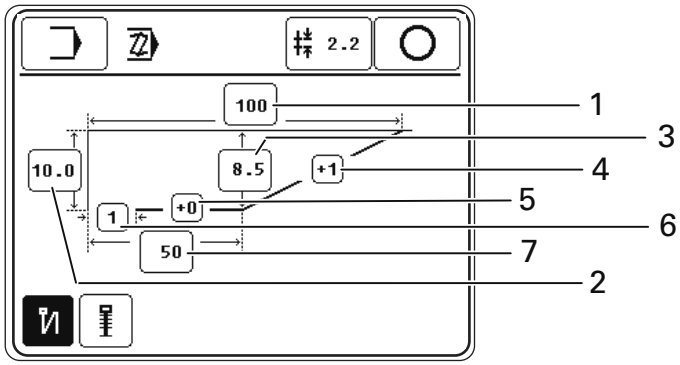

Description of the functions



Input
This function is used to enter the basic input status.



Stitch length
This function is used to call up the menu for the stitch length input.



Sewing
This function is used to conclude the seam program input and change to the sewing mode.

Dart length
Function 1 is used to enter the value for the dart length.

Dart depth
Function 2 is used to enter the value for the dart depth.

Waist depth
Function 3 is used to enter the value for the waist depth.

Curve
Functions 4 and 5 are used to enter the value for the respective curve.

Starting point adjustment
Function 6 is used to enter the value for the adjusted starting point.

Waist length
Function 7 is used to enter the value for the waist depth.

Start backtack
This function is used to activate the start backtacks.

Condensed start stitches
This function is used to activate the condensed start stitches.

11.02.03 Waistband pleat 1

- Switch on the machine.
- Call up the input mode.
- Call up the seam program input function.
- Call up the menu for sewing waistband pleat 1.
- Enter the program number

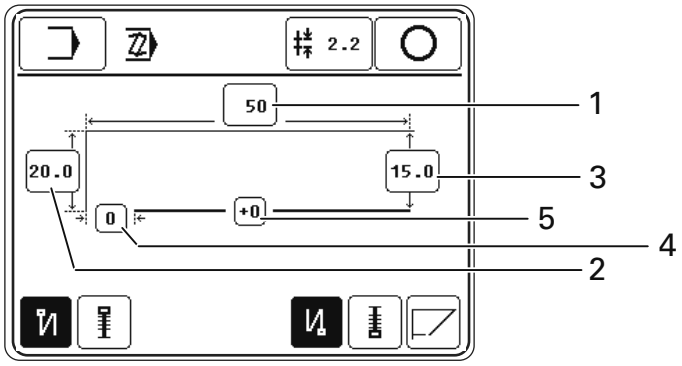

Description of the functions

Input
This function is used to enter the basic input status.

Stitch length
This function is used to call up the menu for the stitch length input.

Sewing
This function is used to conclude the seam program input and change to the sewing mode.

Waistband pleat length
Function 1 is used to enter the value for the waistband pleat length.

Waistband pleat depth
Function 2 is used to enter the value for the waistband pleat depth.

Hip depth
Function 3 is used to enter the value for the hip depth.

Curve
Function 5 is used to enter the value for the curve.

Starting point adjustment

Function 4 is used to enter the value for the adjusted starting point.



Start backtack

This function is used to activate the start backtacks.



Condensed start stitches

This function is used to activate the condensed start stitches.



End backtack

This function is used to activate the end backtacks.



Condensed end stitches

This function is used to activate the condensed end stitches.



Basting seam

This function is used to add a basting seam. The basting seam depth corresponds to the hip depth of the waistband seam. The start and end of the basting seam are entered on the following display screens together with the basting seam type.

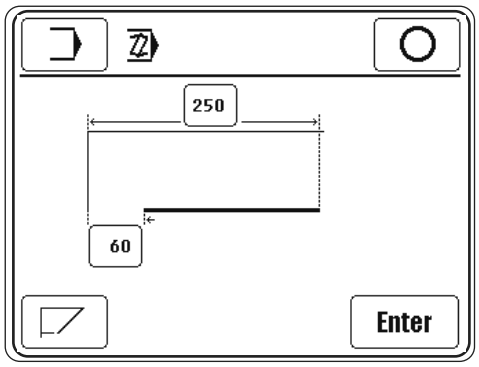

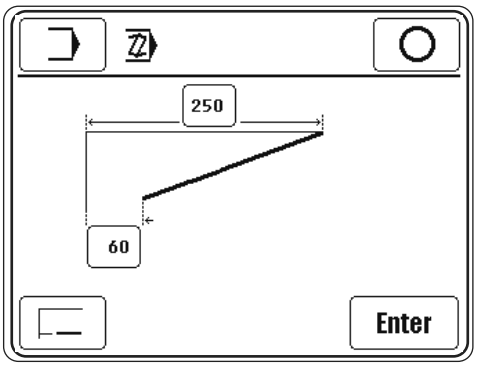

11.02.04 Waistband pleat 2

- Switch on the machine.



- Call up the input mode.

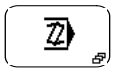

- Call up the seam program input function.

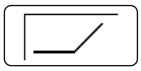

- Call up the menu for sewing waistband pleat 2.

- Enter the program number

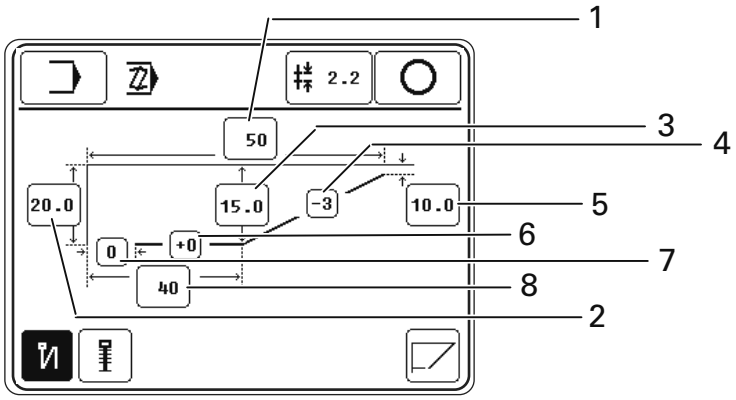

Description of the functions



Input
This function is used to enter the basic input status.



Stitch length
This function is used to call up the menu for the stitch length input.



Sewing
This function is used to conclude the seam program input and change to the sewing mode.

Waistband pleat length
Function 1 is used to enter the value for the waistband pleat length.

Waistband pleat depth
Function 2 is used to enter the value for the waistband pleat depth.

Hip depth
Function 3 is used to enter the value for the hip depth.

Curve
Function 4 and 6 are used to enter the values for the respective curve.

End of waistband pleat depth
Function 5 is used to enter the value for the waistband pleat depth at the end.

Starting point adjustment
Function 7 is used to enter the value for the adjusted starting point.

Hip length
Function 8 is used to enter the value for the hip length.

Start backtack
This function is used to activate the start backtacks.

Condensed start stitches
This function is used to activate the condensed start stitches.

End backtack
This function is used to activate the end backtacks.

Condensed end stitches
This function is used to activate the condensed end stitches.

Basting seam
This function is used to add a basting seam. The basting seam depth corresponds to the hip depth of the waistband seam. The start and end of the basting seam are entered on the following display screens together with the basting seam type.

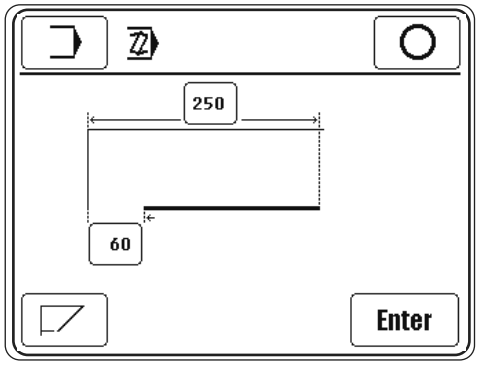

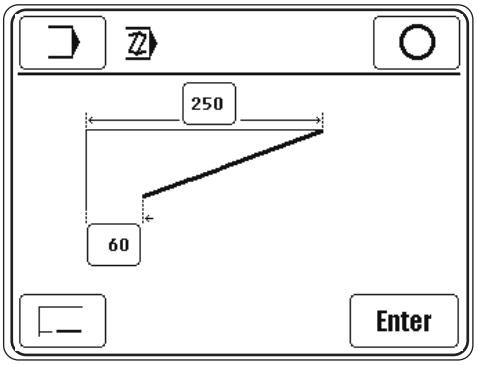

11.02.05 Basting seam

- Switch on the machine.



- Call up the input mode.

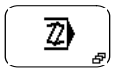

- Call up the seam program input function.

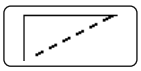

- Call up the menu for sewing a basting seam.

- Enter the program number

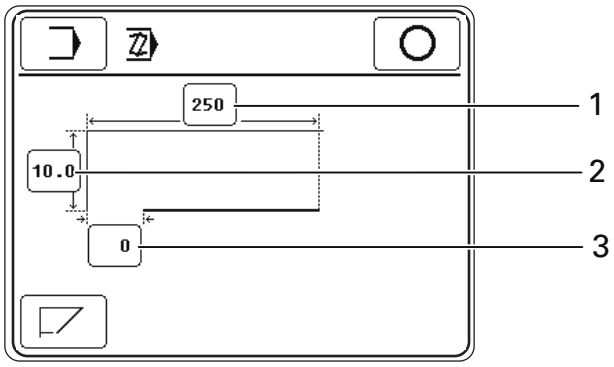

Description of the functions



Input
This function is used to enter the basic input status.



Stitch length
This function is used to call up the menu for the stitch length input.



Sewing
This function is used to conclude the seam program input and change to the sewing mode.

Basting seam length
Function 1 is used to enter the value for the basting seam length.

Basting seam depth
Function 2 is used to enter the value for the basting seam depth.

Starting point adjustment
Function 3 is used to enter the value for the adjusted starting point.

Basting seam type
This function is used to select the basting seam type.

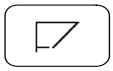

11.03 Examples for entering seam programs

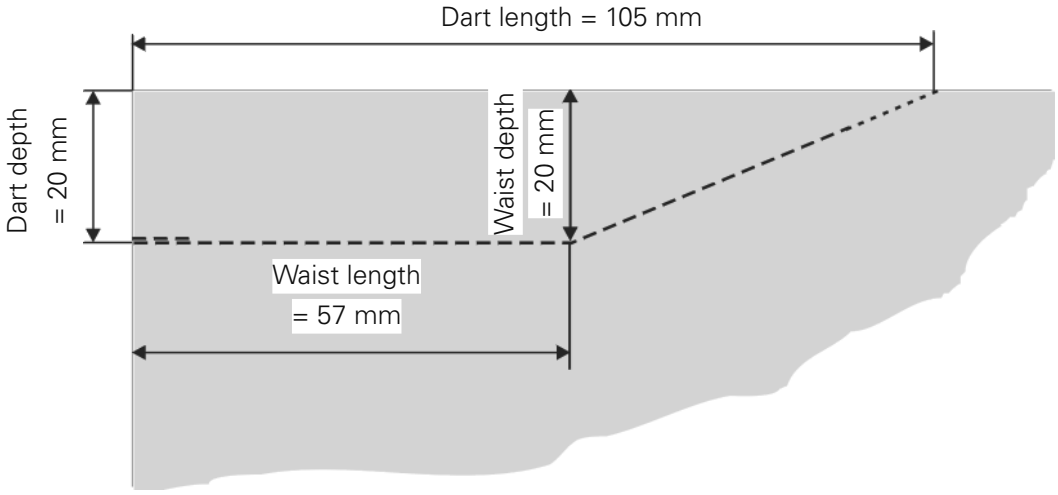

- The seam type "Dart **2**" must be used to create the seam pattern.
- The program number for the seam program should be "**222**".
- The stitch length must be **2.0** mm.
- Backtacking stitches should be carried out at the beginning of the seam.

- Switch on the machine.



- Call up the input mode.

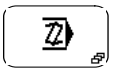

- Call up the seam program input function.

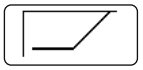

- Call up the menu for sewing dart **2**.

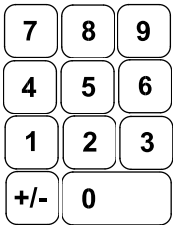

- Enter the program number "**222**" on the number block.



- Confirm input.

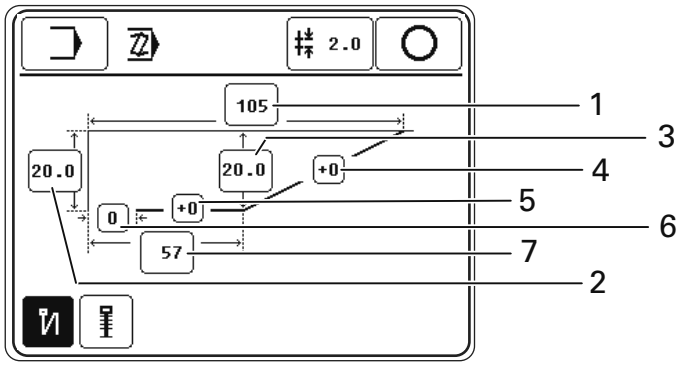

- Call up function **1** and enter the value "**105**" for the dart length using the number block.

Enter
- Confirm input.
- Call up function **2** and enter the value "**20**" for the dart depth using the number block.

Enter
- Confirm input.

The values for the curve (functions **4** and **5**) remain unchanged.

- Call up function **3** and enter the value "**20**" for the waist depth using the number block.

Enter
- Confirm input.
- Call up function **7** and enter the value "**57**" for the waist length using the number block.

Enter
- Confirm input.

И
- Activate the start backtack.

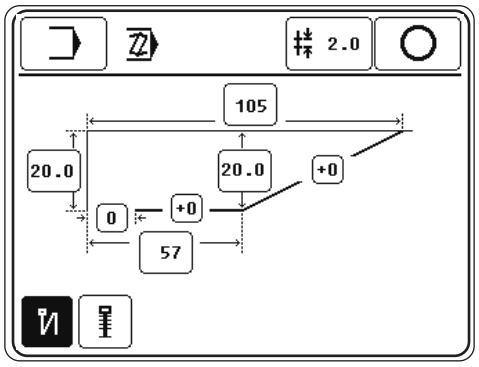

○
- Conclude the seam programme input.
  The values are checked and the seam pattern calculated. If errors are recognized, these are displayed with an appropriate message.

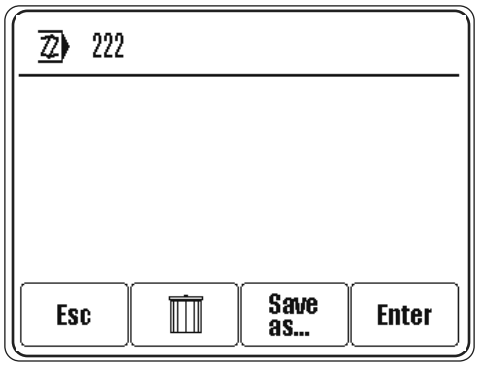

Enter
- Save the seam program.

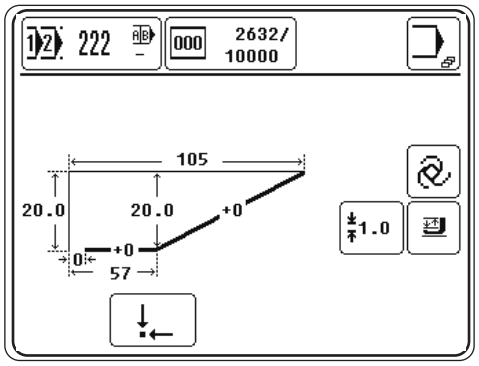

11.04 Program management

The program management function is used to manage seam programs as well as configuration and machine data. Files can be selected from the machine memory or from a SD-Card and be copied or deleted.

- Switch on the machine.



- Call up the input mode.

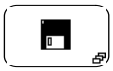

- Call up the program management function.

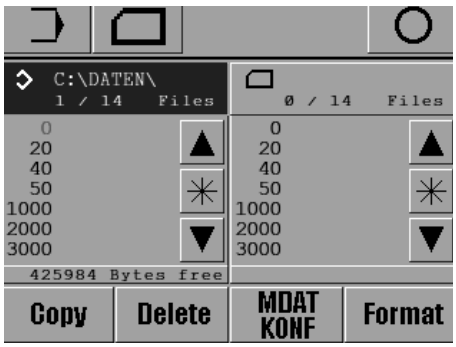

Both data carriers with the corresponding files appear on the display:
- Machine memory ("C:\DATEN\") is currently selected
- SD-Card ( ) is currently inserted

The data carrier is selected by touching the appropriate box, and the content of the appropriate data carrier is also updated. The selected drive is shown as a invers symbol, the selectet files are shown red.

Seam programs are filed at a different level to that for the configuration and machine data, in order to avoid the configuration and machine data being processed by mistake.

Description of the functions



Input mode
This function is used to changed to the initial state of the input mode.



Update disk drives
This function is used to update (upload)the drives.



Conclude input
This function is used to conclude the input, and the machines changes to the sewing mode.

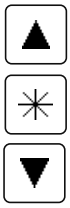

Data selection
With these functions the desired files are marked in the current drive. Individual files are selected with the arrow keys. In combination with the lock key (*) several files can be selected at one time with the arrow keys.



Copy
This function is used to copy the files selected from the current data carrier onto the second data carrier.



Delete
This function is used to delete the selected files.



MDAD/KONF
This function is used to call up the level for the configuration and machine data. The current settings and the machine configuration are stored in the files "MDAT3586" and "KONF3586. BIN". In this way the machine data can be copied on to a CD-Card as a backup, or several machines with the same designation can be configured quickly by reading the machine data.



Format
This function is used to format the CD-Card inserted.



In the course of the formatting operation, all data on the CD-Card is deleted!

11.05 Rights of access

The functions, which can be called up with the control panel, are classified by code numbers and can be protected from unauthorised access. For this purpose, the control unit differentiates between 3 user groups (user 1, 2 and 3), all of which can be assigned a corresponding PIN. If a function is selected, for which the user does not have an authorisation, the user is requested to enter a PIN. After the appropriate PIN has been entered, the selected function is carried out. In addition to the 3 user groups, the control unit also recognises the so-called "super user", who, equipped with a key-switch, has access to all functions and who is authorised to stipulate the rights of access.

- Enter the key-switch and switch on the machine.



- Call up the input mode.

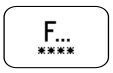

- Call up the menu for entering rights of access.

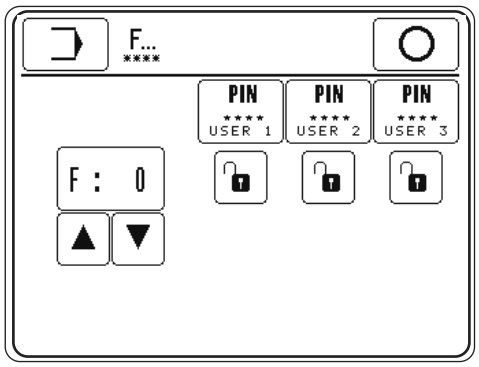

Description of the functions

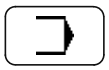

Input mode
This function is used to change from the initial state to the input mode.



Conclude input
This function is used to conclude the input, and the machines changes to the sewing mode.



Entering the PIN
With this function an individual PIN for each user can be stipulated.

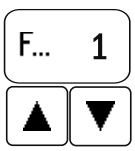

Function selection
These functions are used to select the code number for the function to be locked or released.

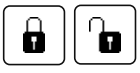

Locking/releasing
These functions are used to lock or release the function for the appropriate user.

Allocation of the code numbers

Function	Symbol	Code number	Standard setting		
			User 1	User 2	User 3
Program number selection		0			
Correct program		1			
Reset bobbin thread counter		2			
Input		3			
Create program		4			
Program management		5			
Parameter settings	PAR	6			
Info		7			
Reset day piece counter		8			
Clear operating hours counter		9			
Clear production hours counter		10			
Country settings		11			
Rights of access		12			
Service		13			
Carry out a cold start		14			
Configurate machine		15			
Load software		16			
Set contrast for control panel		17			
Thread trimming cycle		18			
Needle position	POS	19			
Set zero points		20			

12 Care and maintenance

12.01 Maintenance intervals

Clean the entire machine	once a week
Clean the hook compartment	several times a day
Clean the needle area	several times a day
Clean the fan air filter	as required
Clean air filter of air filter/lubricator	as required
Check the air pressure	daily, before use
Check the oil level	every 6 months
Lubricate feed units	every 6 months



During all cleaning work the machine must be disconnected from the power supply by switching off the main switch or pulling out the plug!
Danger of injury if the machine is started accidentally!

12.02 Cleaning the machine

The cleaning cycle required for the machine depends on following factors:

- Single or multi-shift operation
- Amount of dust resulting from the workpiece

It is therefore only possible to stipulate the best possible cleaning instructions for each individual case.

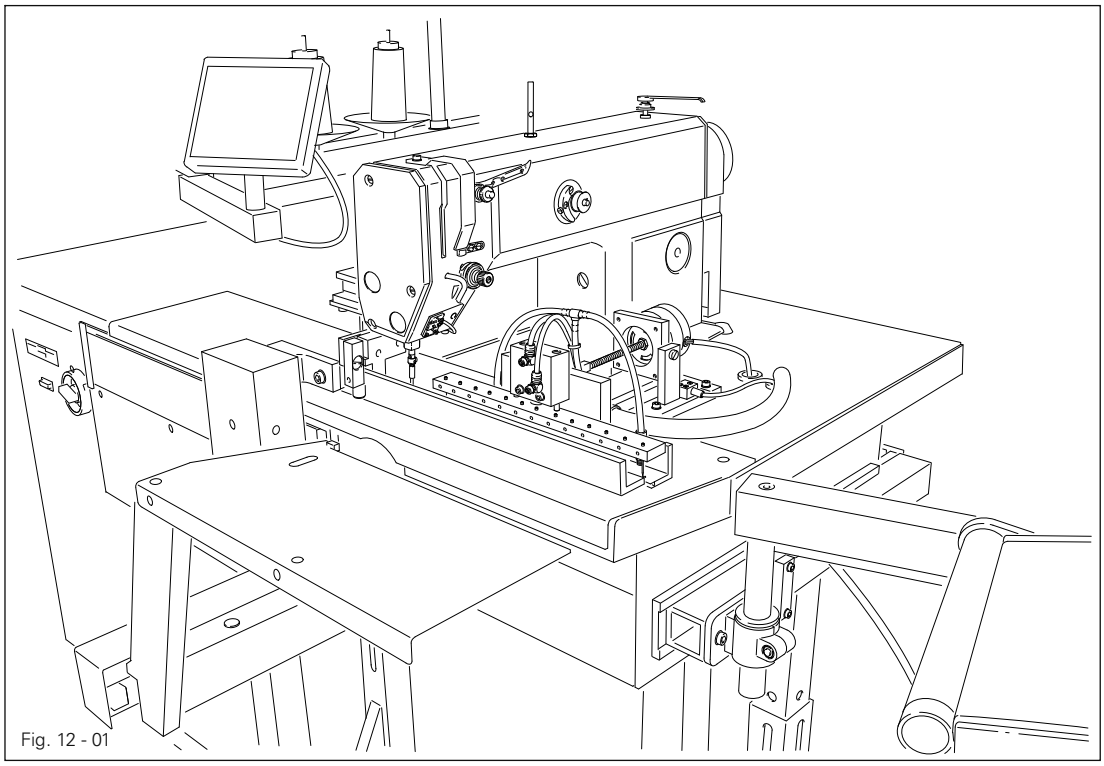

Fig. 12 - 01

To avoid breakdowns, the following cleaning work is recommended for single shift operation:

- Clean hook compartment and needle area of sewing head several times daily.
- Clean the entire machine at least once a week.

12.03 Cleaning the hook compartment



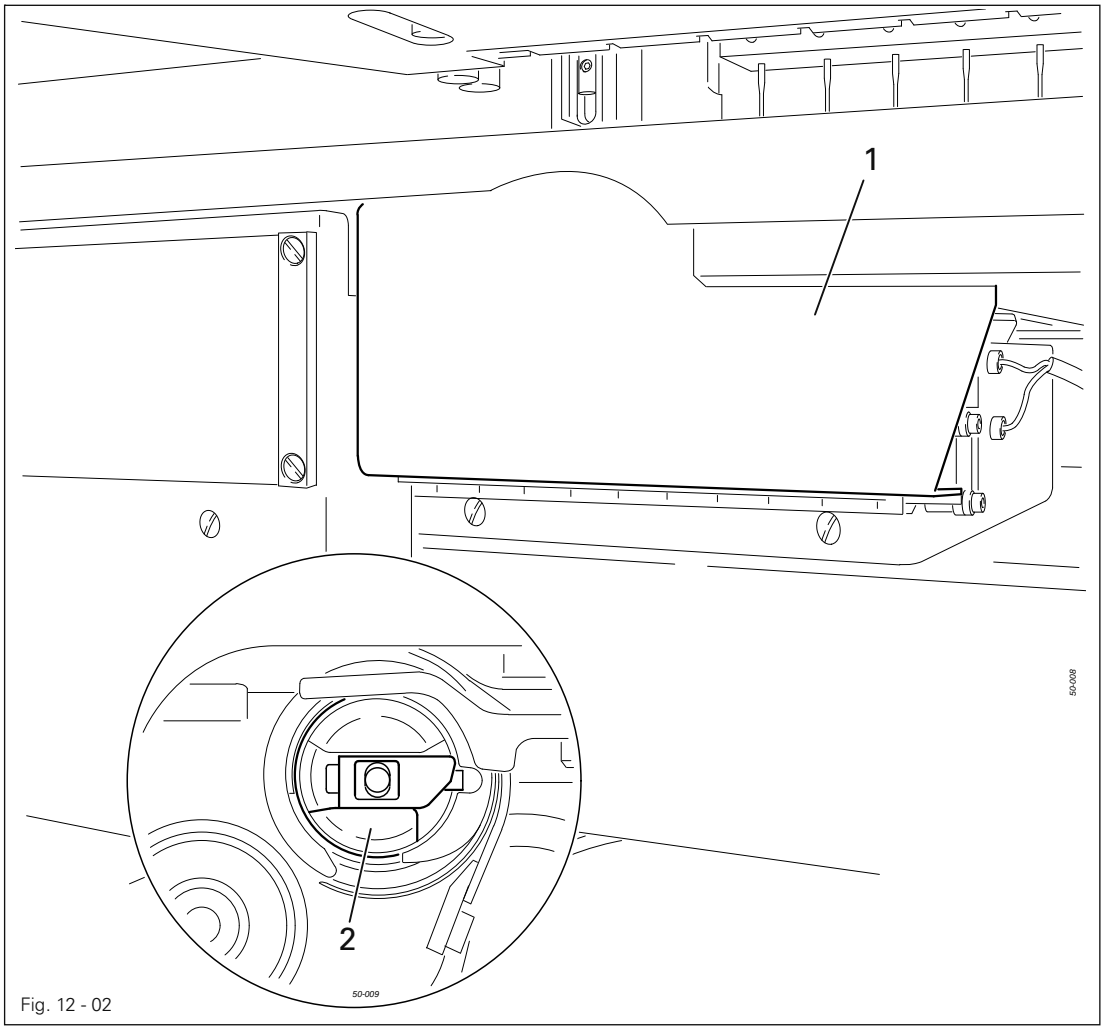

Fig. 12 - 02



Switch off the machine and make sure that it cannot restart!
Danger of injury if the machine suddenly starts up again!

- Open hook compartment cover **1**.
- Clean the hook and hook compartment daily, more often if in continuous use.

12.04 Cleaning the fan air filter

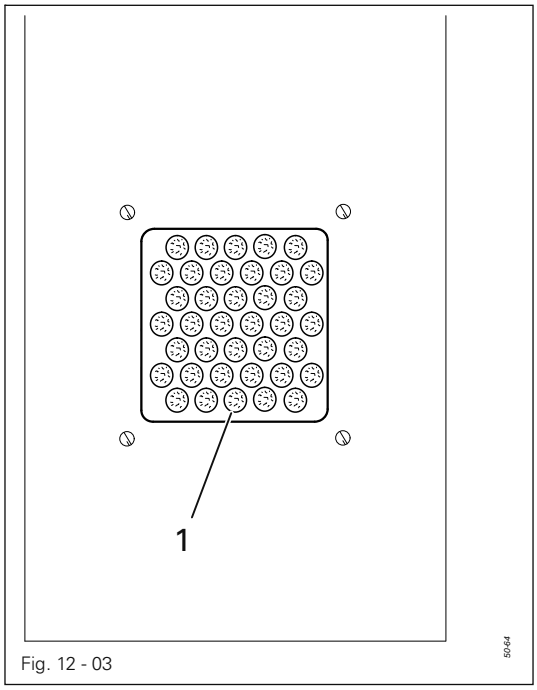

Fig. 12 - 03

- Remove cover **1**.
- Remove the filter unit and blast clean with compressed air.
- Insert the clean filter unit and replace cover **1**.

12.05 Cleaning the air filter of the air-filter/lubricator

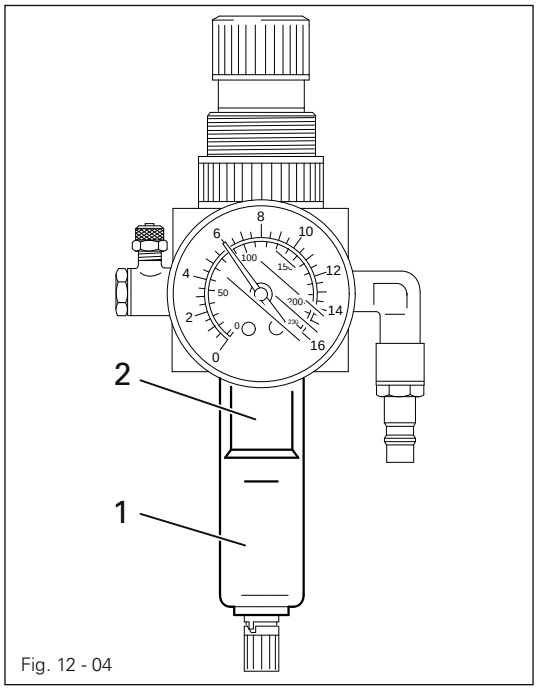

Fig. 12 - 04

Switch the machine off!
Disconnect the air hose at the air-filter/lubricator.

To drain water bowl **1**:

- Water bowl **1** drains itself automatically whe the compressed-air hose is disconnected from the air-filter/lubricator.

Cleaning filter **2**:

- Unscrew water bowl **1**.
- Take out filter **2**.
- Clean filter **2** with compressed air or isopropyl alcohol (part No. **95-665 735-91**).
- Screw in filter **2** and screw on water bowl **1**.

12.06 Checking/adjusting the air pressure

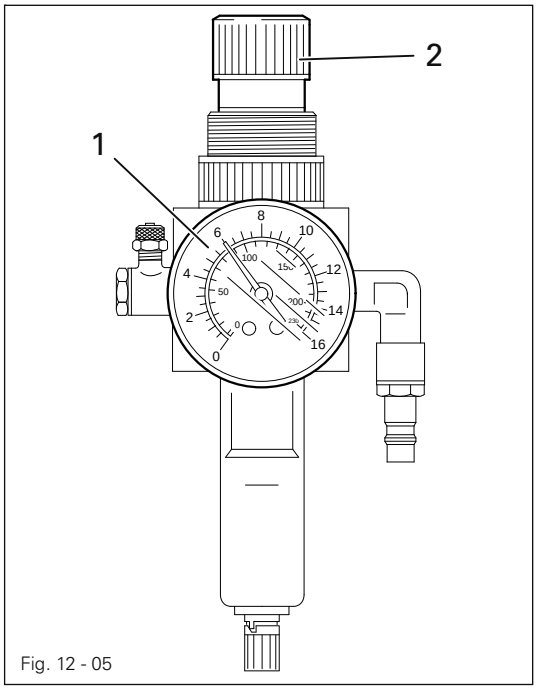

Fig. 12 - 05

- Before operating the machine, always check the air pressure on gauge1.
- Gauge 1 must show a pressure of 6 bar.
- If necessary adjust to this reading.
- To do so, pull knob 2 upwards and turn it so that the gauge shows a pressure of 6 bar.

12.07 Topping up the oil tank

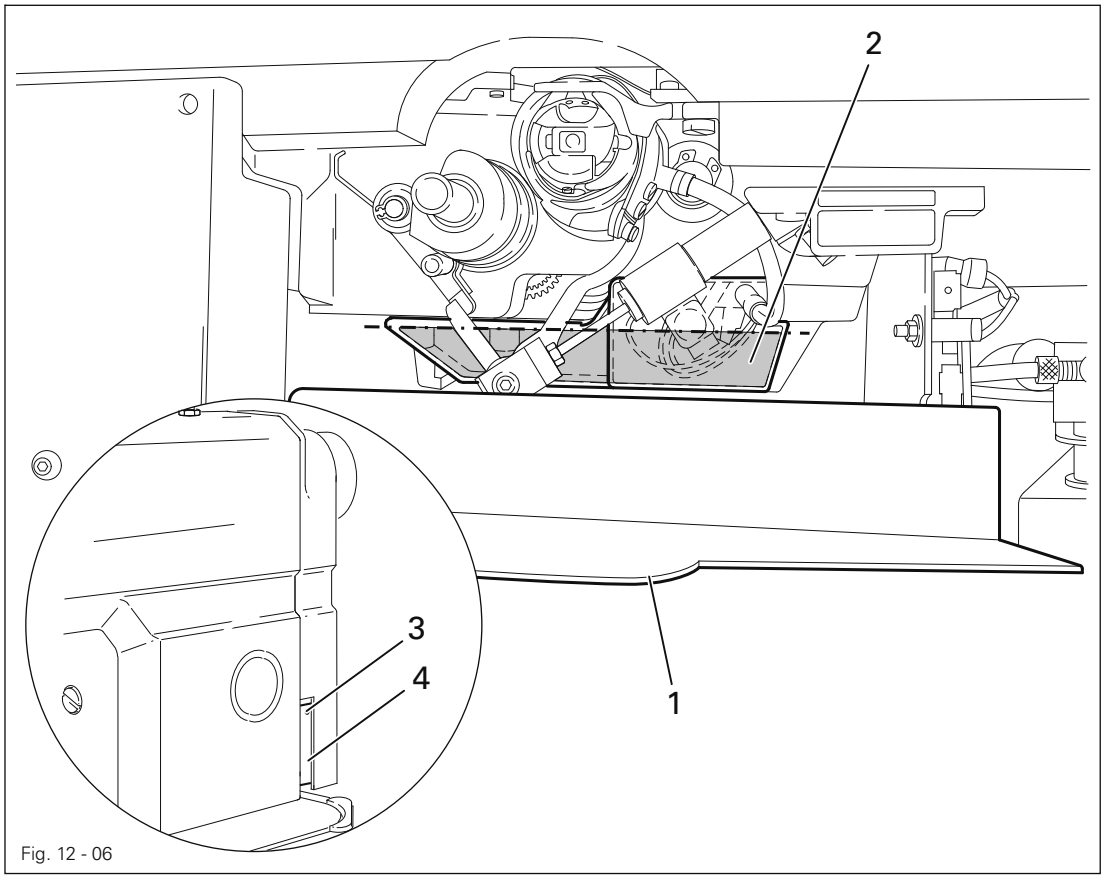

Fig. 12 - 06



Switch off the machine and make sure that it cannot restart!
Danger of injury if the machine suddenly starts up again!



- Open hook compartment cover **1**.



The oil reservoir must always have oil in it.
Only use oil with a mean viscosity of **22.0 mm²/s** at **40°C** and a density of **0.865 g/cm³** at **15°C**.

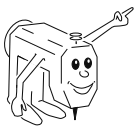

We recommend PFAFFsewing machine oil, part no. **280-1-120 144.**

- When required, fill oil into the tank **2** through hole **3** (fill max. up to line).



Oil tank **4** is not intended as an oil level indicator, but for filling tank **2**.

12.08 Lubricating the feed guide units

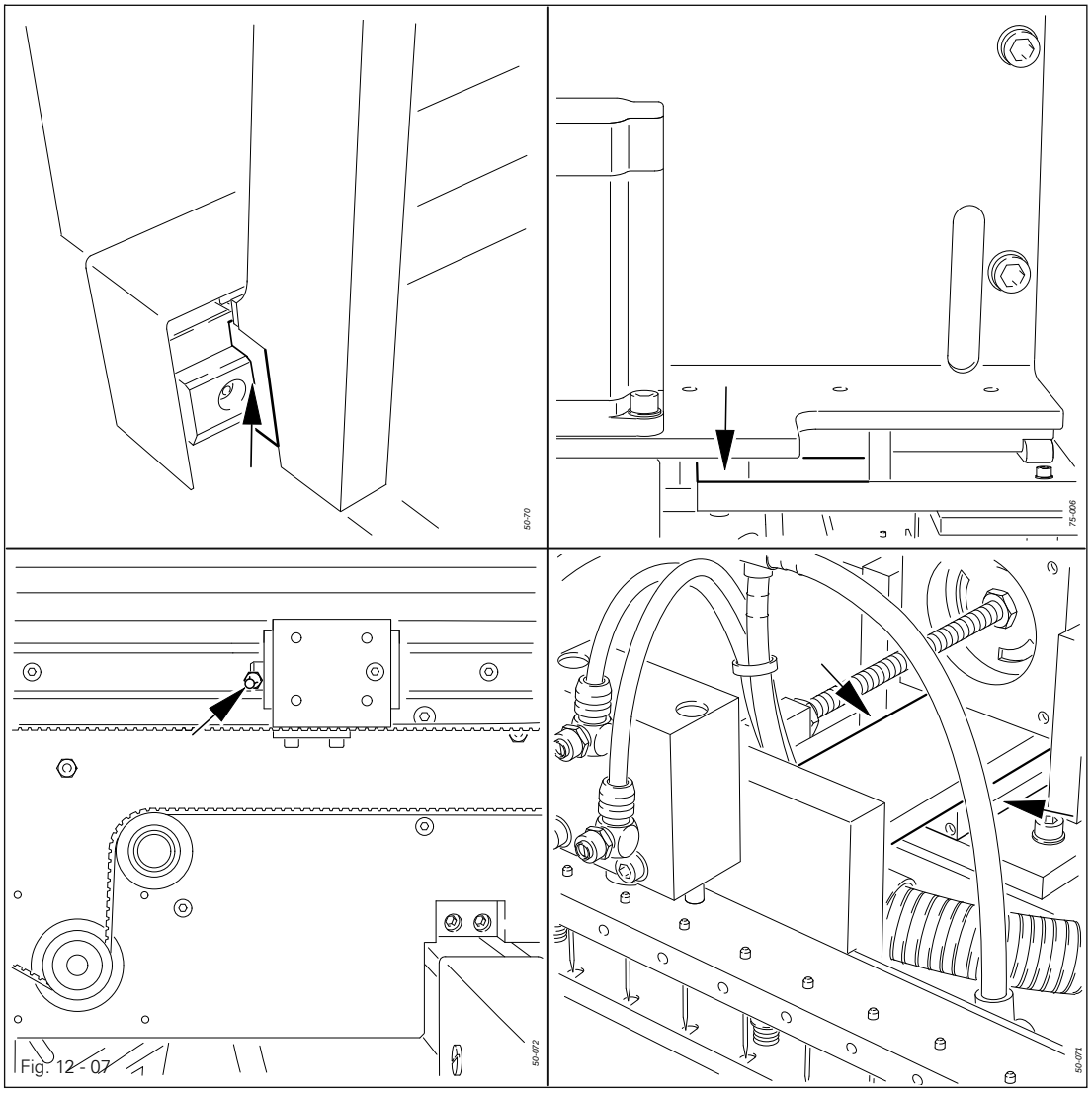

Fig. 12 - 07

Switch off the machine and make sure that it cannot restart!
Danger of injury if the machine suddenly starts up again!

Only use **IsoflexTopas L32** high-performance grease, part no. **280-1-120 210**.

- Unscrew the cover of the X-feed.
- With the appropriate lubricating nipple, using a grease gun, lubricate the guide units every **6** months for single shift operation, and once a month for double shift operation.
- Screw cover of the X-feed back on.

13 Adjustment



On the PFAFF **3586-12/02** and **3586-13/..** do not use a screw clamp on the needle bar! The special coating of the needle bar could be damaged.

13.01 Notes on adjustment

All following adjustments are based on a fully assembled machine and may only be carried out by expert staff trained for this purpose. Machine covers, which have to be removed and replaced to carry out checks and adjustments, are not mentioned in the text. The order of the following chapters corresponds to the most logical work sequence for machines which have to be completely adjusted. If only specific individual work steps are carried out, both the preceding and following chapters must be observed. Screws, nuts indicated in brackets ( ) are fastenings for machine parts, which must be loosened before adjustment and tightened again afterwards.



Unless stated otherwise, during all adjustment work the machine must be disconnected from the electric and pneumatic power supply!
Danger of injury if the machine is started accidentally!

13.02 Tools, gauges and other accessories

- 1 set of screwdrivers with blade widths from 2 to 10 mm
- 1 set of wrenches with jaw widths from 7 to 14 mm
- 1 set of Allan keys from 1.5 to 6 mm
- 1 metal ruler, part no. 08-880 218-00
- 1 adjustment gauge, part no. 95-752 474-05
- 1 adjustment gauge for zero point adjustment, 95-779 096-05
- 1 adjustment pin for zero point adjustment, 95 779 095-05
- 1 measuring instrument for the belt tension Part No. 99-137 380-91
- 1 adjustment gauge for tightening the hook drive belt, Part-No. 61-111 639-76

13.03 Abbreviations

TDC = top dead center
BDC = bottom dead center

13.04 Tilting the sewing head



Turn off the compressed air!
Switch off the machine and take measures to prevent it being switched on again!

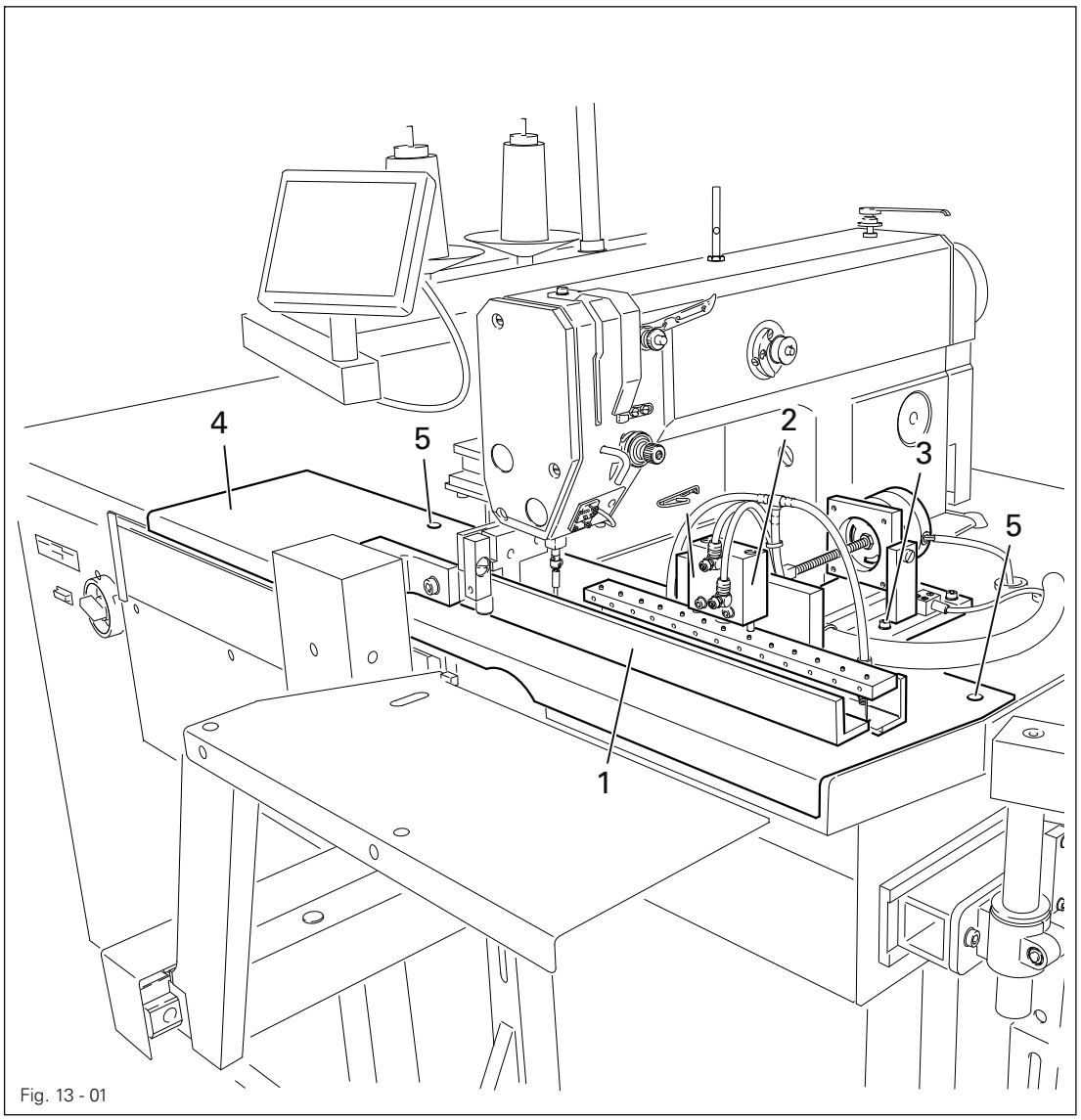

Fig. 13 - 01

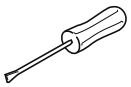

- Slide pressure bar **1** to the left and tilt down.
- Tilt back material take-over unit **2** (screws **3**, two screws in total).
- Slide cover plate **4** (screws **5**) to the left.
- Tilt back sewing head.
- To reassemble, carry out the above procedure in the reverse order.

13.05 Adjustment aids

With the help of adjustment gauge **1** (part no. **95-7**52 474-05) the needle bar can be fixed in the needle rise position (needle bar position 1.8 **mm** below b.d.c.)

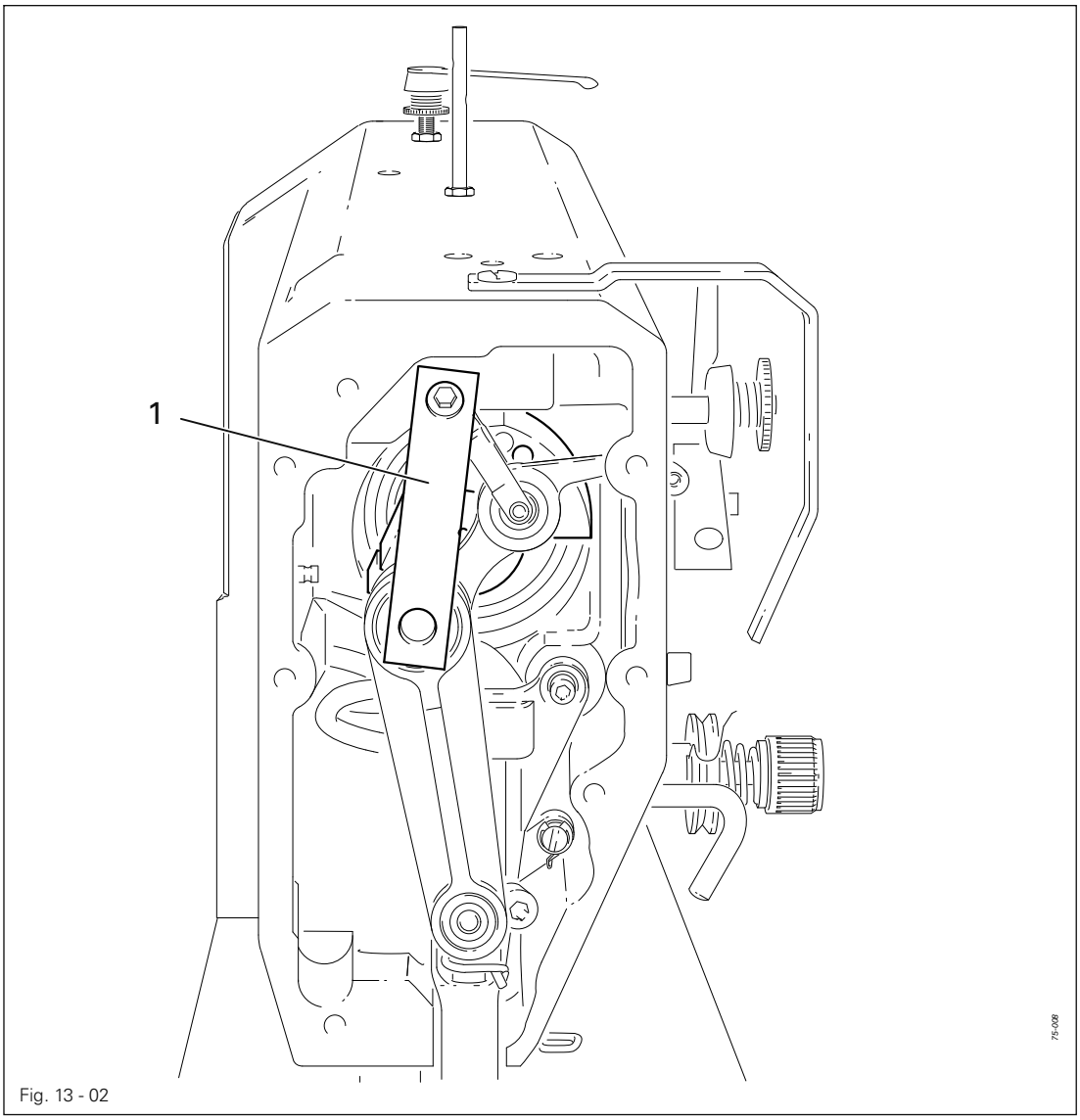

Fig. 13 - 02

- Turn the balance wheel until the needle bar is approximately in the required position.
- Fit adjustment gauge **1** as shown in Fig. **13-02**. If necessary, turn the balance wheel a fraction backwards and forwards, until the adjustment gauge fits properly.

13.06 Adjusting the sewing head

13.06.01 Basic position of the machine drive

This adjustment is only required if toothed belt **2** has been removed.

Requirement
When the needle bar is positioned **1.8 mm** past b.d.c., the markings **3** and **4** should be in alignment.

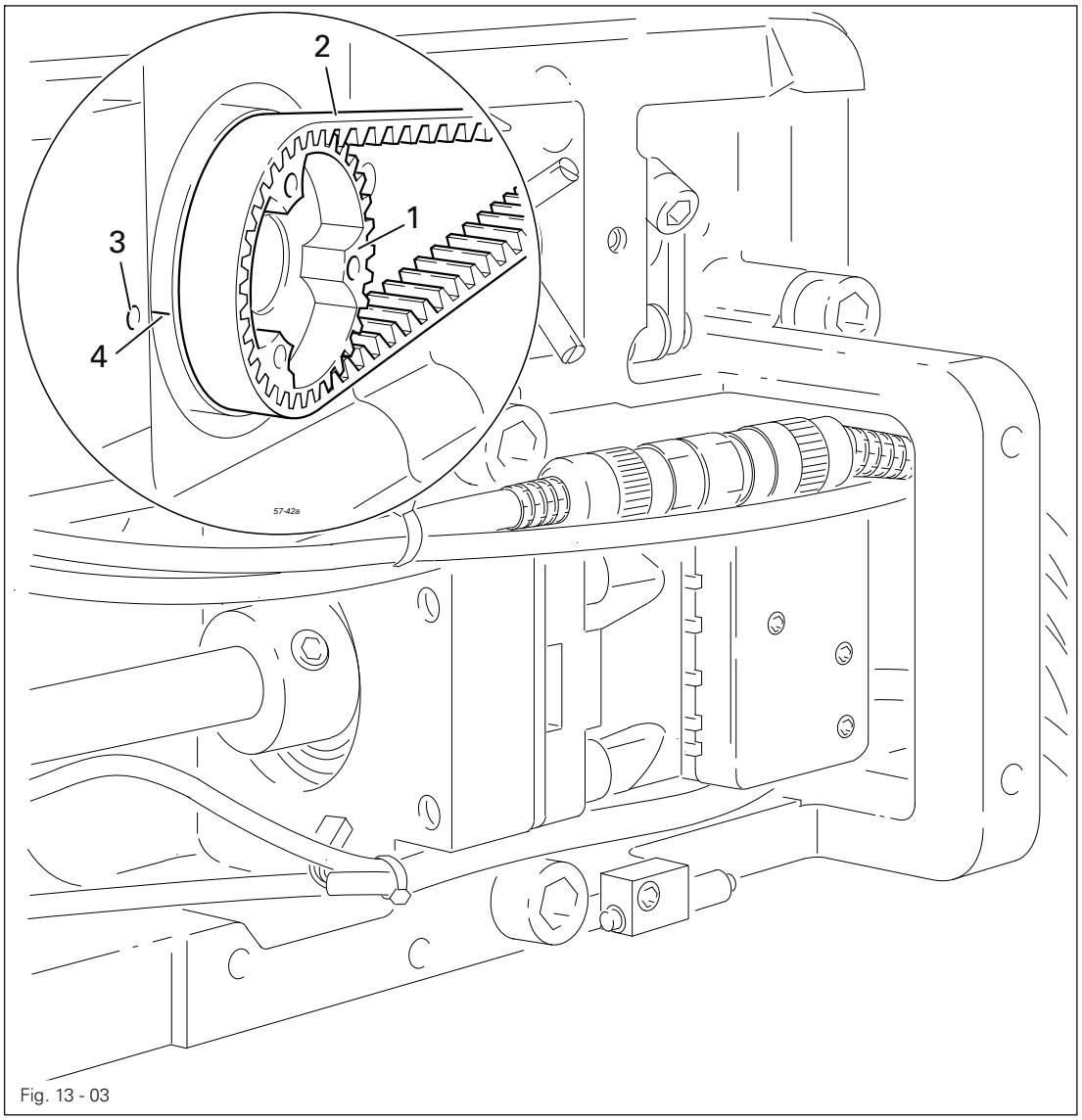

Fig. 13 - 03

- Set needle bar at **1.8 mm** past b.d.c. (see Chapter **13.05 Adjustment aids**).
- Turn toothed belt sprocket **1** according to **Requirement** and push on toothed belt **2**.

When installing the motor pay attention to the correct position of shaft flange, shock absorber and motor flange!

13.06.02 Needle in needle hole centre

Requirement
The needle should enter exactly in the centre of the needle hole.

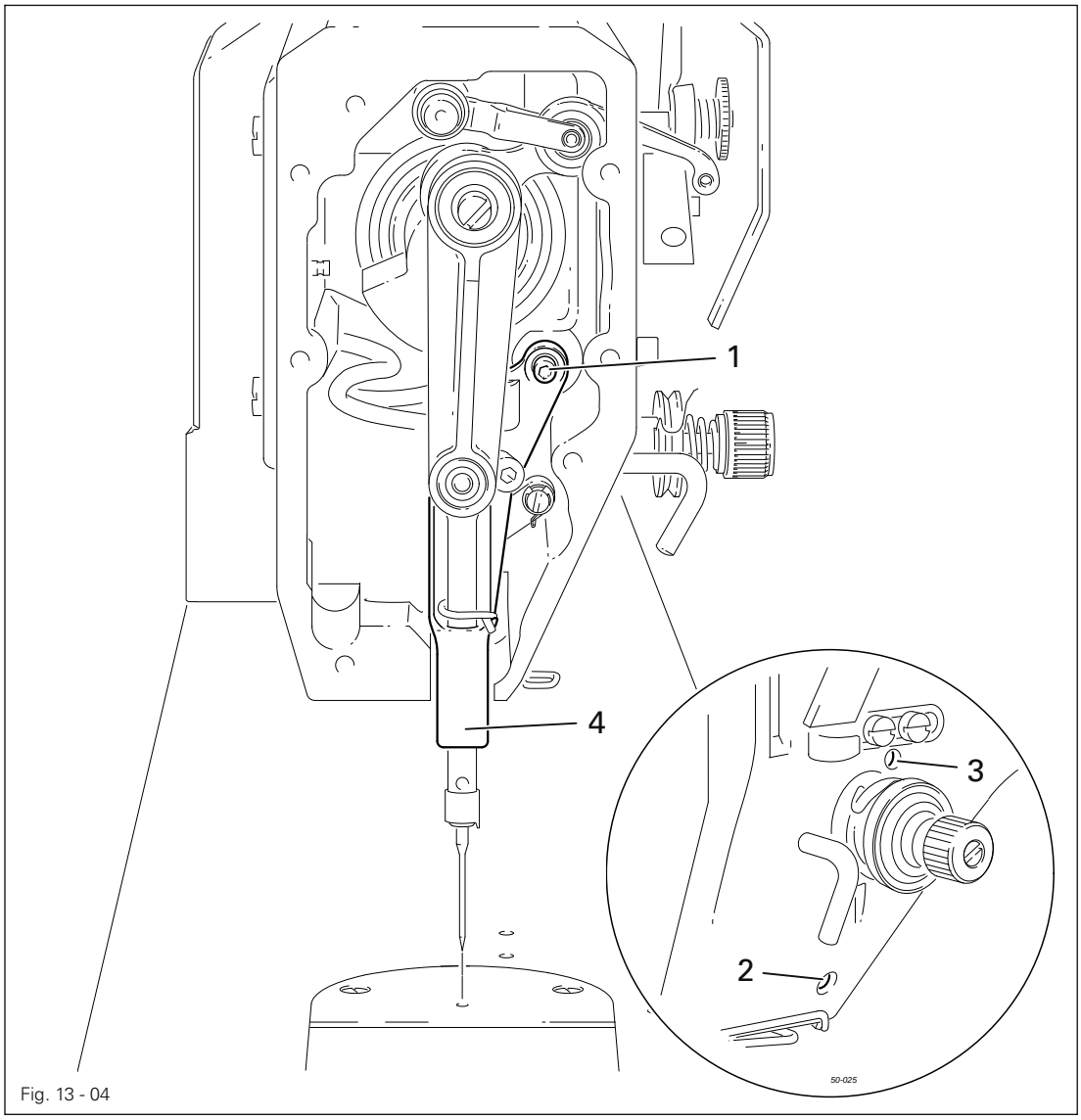

Fig. 13 - 04

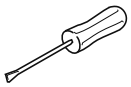

- Position the needle directly above the needle hole.
- Loosen screws **1**, **2** and **3**.
- Adjust needle bar frame **4** according to the **requirement**.
- Tighten screw **2** and slightly tighten screw **3**.
- With screw **1** draw the inner guide stud towards the eye of the needle bar frame **4** and tighten it.
- Turn the balance wheel a few times, so that the needle bar frame **4** is not under tension.
- Tighten screw **3**.

13.06.03 Hook shaft bearing and toothed belt tension

Requirement

1. The front edge of the hook shaft **6** must be at a distance of **14.5 mm** to the needle center. At the same time, the slot in the hook shaft bearing **1** (see arrow) must be parallel to the bedplate and pointing opposite to the direction of sewing.
2. The toothed belt should be tightened in such a way that, when the gauge is pushed onto the toothed belt, the marking in the gauge window corresponds to the marking on the bushing.

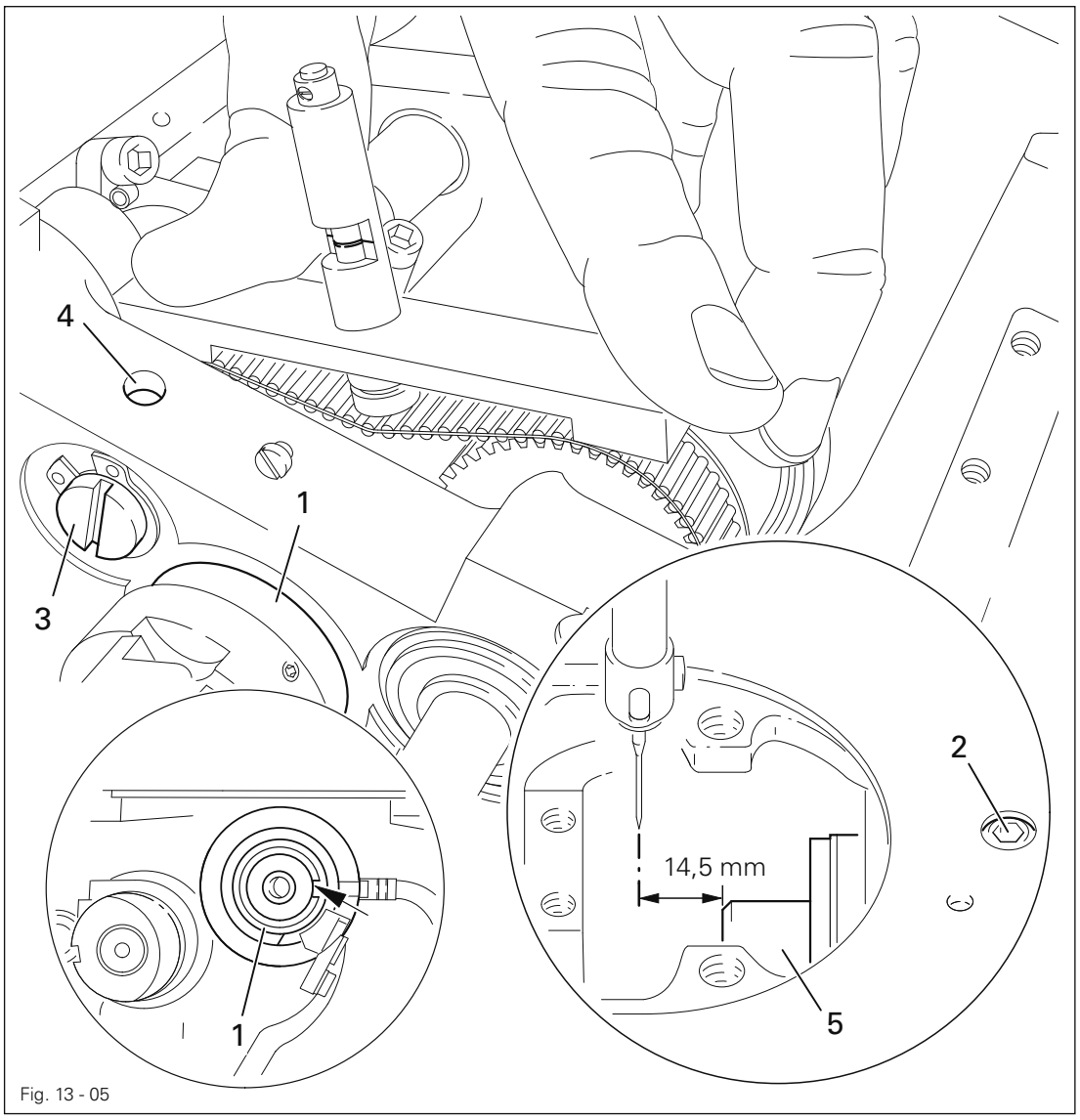

Fig. 13 - 05

- Align hook shaft bearing **1** (screw **2**) according to **requirement 1**.
- Push the gauge (Part-No. **61-111 639-76**) onto the toothed belt so that it is centred to the toothed belt and touching the bearing of the sliding shaft. The gauge window must be facing the hook.
- Eccentric **3** (screw **4**) clockwise in accordance with **requirement 2**, taking care that the axial position of eccentric **3** is not altered.

13.06.04 Hook lubrication

Requirement

1. The centrifugal disk **1** must be positioned **1.5 mm** in front of the oil ring **3**.
2. When the machine is running at full speed, after approx. **10** seconds a mark should be made by a fine stripe of oil on the strip of paper placed over the needle plate cutout.

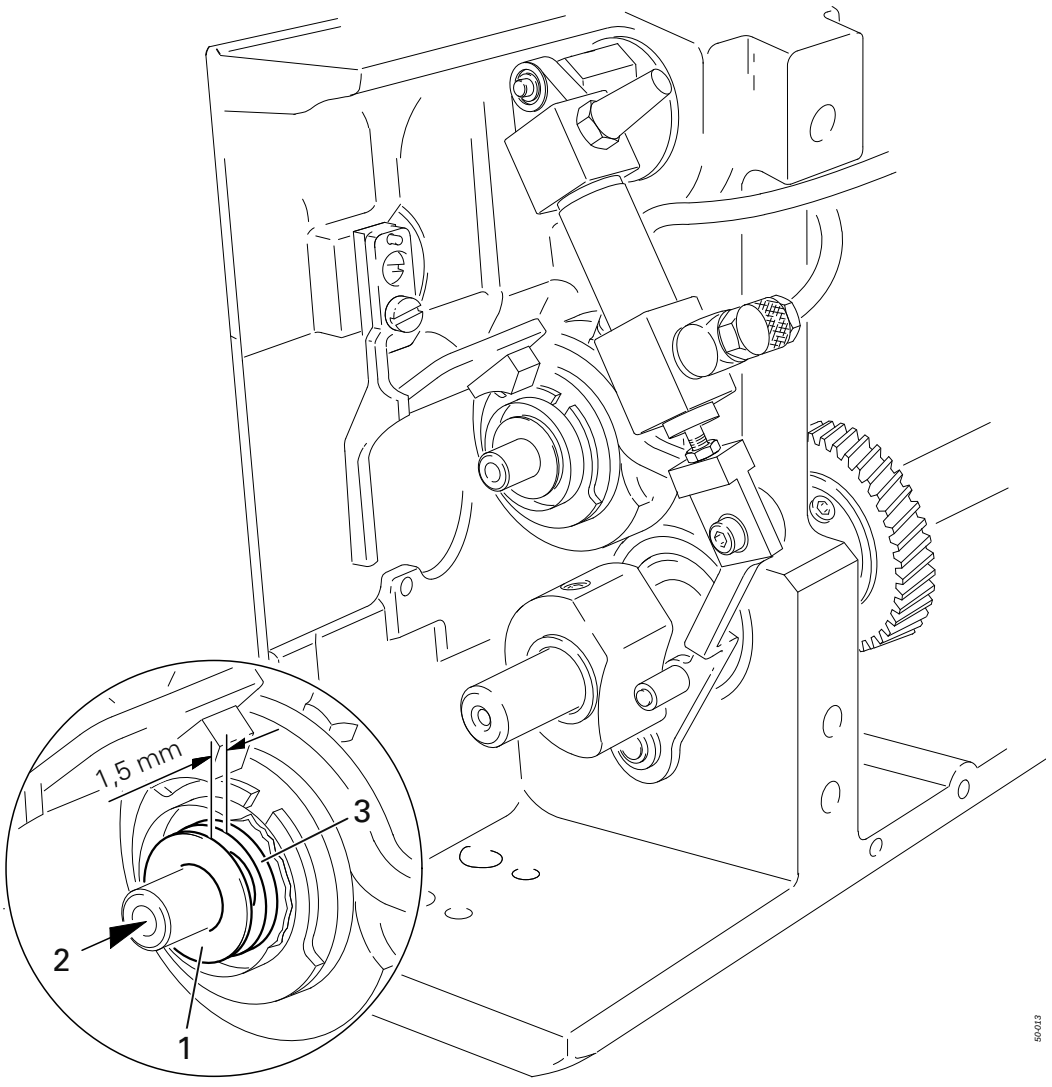

Fig. 13 - 06

The adjustment is only necessary if the wick has been replaced.
When replacing the wick, make sure that the new wick is impregnated with oil.

- Move the centrifugal disk **1** (screw **2**) according to **requirement 1**.
- Check **requirement 2**. If necessary, move centrifugal disk **1**.

13.06.05 Needle rise, hook-to-needle clearance, needle height and bobbin case position finger

Requirement
With the needle at **1.8 mm** after BDC,
1. the hook point **6** must point to the middle of the needle and be at a distance of **0.05 mm** - **0.1 mm** to the clearance cut of the needle, and
2. the top edge of the needle eye must be **0.8 mm** below the hook point.
3. Between the projection of the bobbin case position finger **4** and the bottom of the retaining groove there should be a distance of **0.5 mm**.

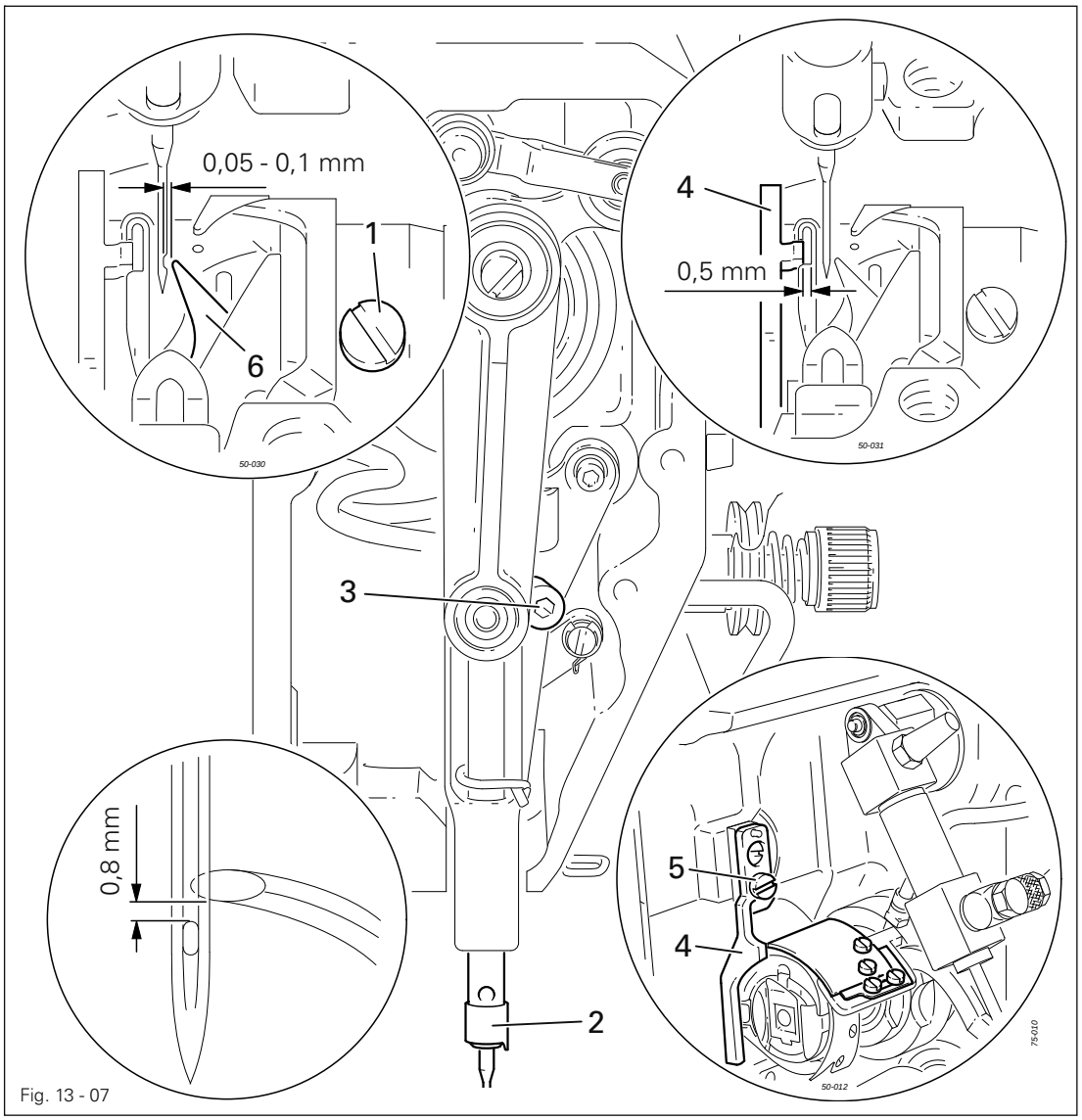

Fig. 13 - 07

- Set needle bar at **1.8 mm** past b.d.c. (see Chapter **13.05** Adjustment aids).
- Adjust the hook according to **requirement 1**.
- Tighten screw **1**.
- Move needle bar **2** (screw **3**) without turning it according to **requirement 2**.
- Align bobbin case position finger **4** (screw **5**) according to **requirement 3**.

13.06.06 Thread check spring and slack thread regulator

Requirement

1. The motion of the thread check spring must be completed when the needle point enters the material (spring stroke approx. **7 mm**).
2. When the thread loop is at its largest when going around the hook, the thread check spring must have moved by approx. **1 mm**.

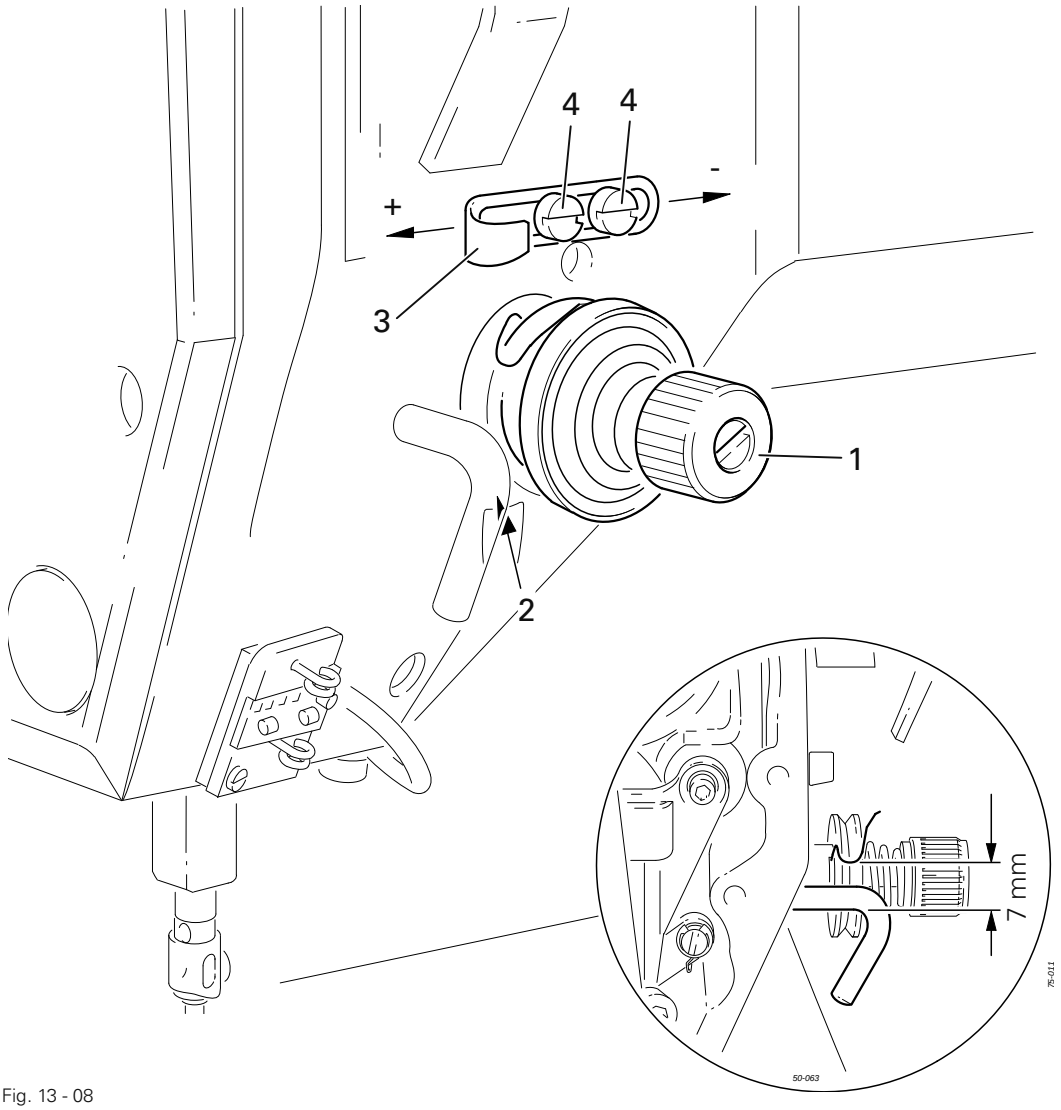

Fig. 13 - 08

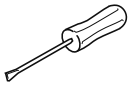

- Turn thread tension **1** (screw **2**) according to **requirement 1**.
- Turn thread tension **3** (screw **4**) according to **requirement 2**.

Due to technical sewing reasons it may be necessary to deviate from the spring stroke indicated above.

Move the slack thread regulator **3** (screw **4**) toward the "**+**" (= more thread) or toward the "**-**" (= less thread)

13.06.07 Bobbin winder

Requirement

1. With the bobbin winder on, the drive wheel **1** must engage reliably.
2. With the bobbin winder off, the friction wheel **5** must not be driven by the drive wheel **1**.
3. he bobbin winder must turn off automatically when the thread level is approx. **1 mm** from the edge of the bobbin.

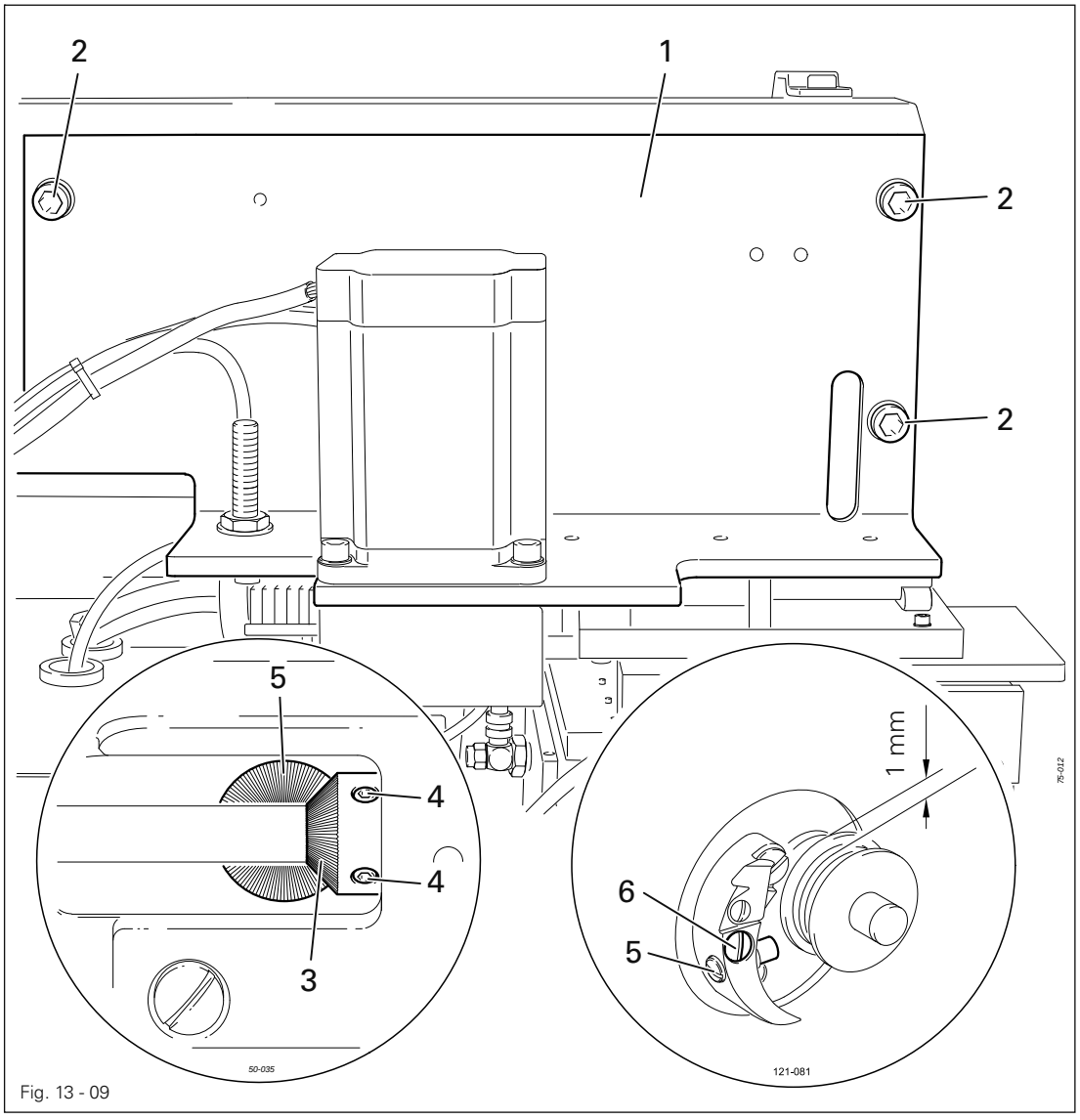

Fig. 13 - 09

- Unscrew drive unit **1** for the Y-axis (screws **2**).
- Adjust drive wheel **3** (screws **4**) in accordance with **requirements 1** and **2**.
- Adjust stud **5** (screw **6**) in accordance with **requirement 3**.
- Screw on drive unit **1** for the Y-axis (screws **2**) parallel to the front side of the machine head.

13.07 Adjusting the thread trimming device

13.07.01 Preliminary adjustment of the control cam

Requirement
When the needle bar is at its t.d.c., the surface **1** of the control cam should be parallel to the bed-plate.

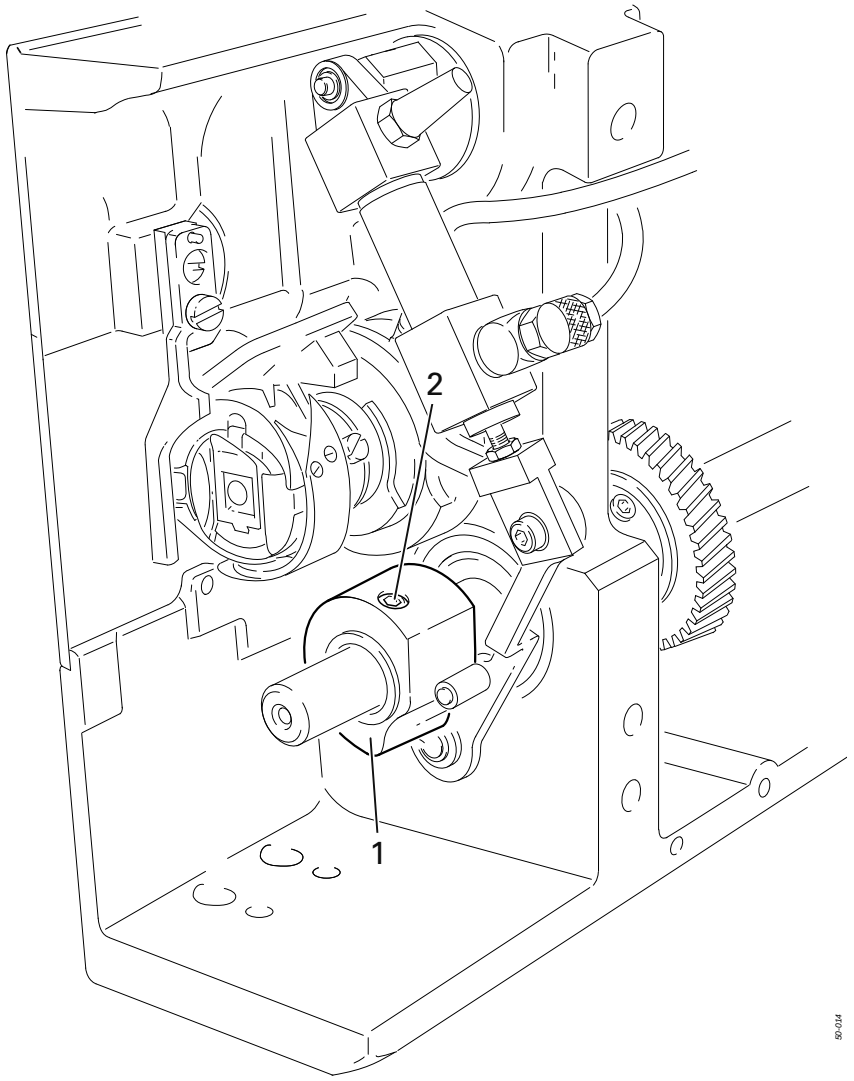

Fig. 13 - 10

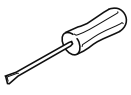

- Adjust control cam **1** (screws **2**) in accordance with the **requirement**.

13.07.02 Adjusting the roller lever

Requirement

1. When cylinder **3** is fully extended, the roller of roller lever **4** should be **0.1 mm** away from the highest point of control cam **5**.
2. Cylinder **3** should be parallel to the front edge of the bed-plate.

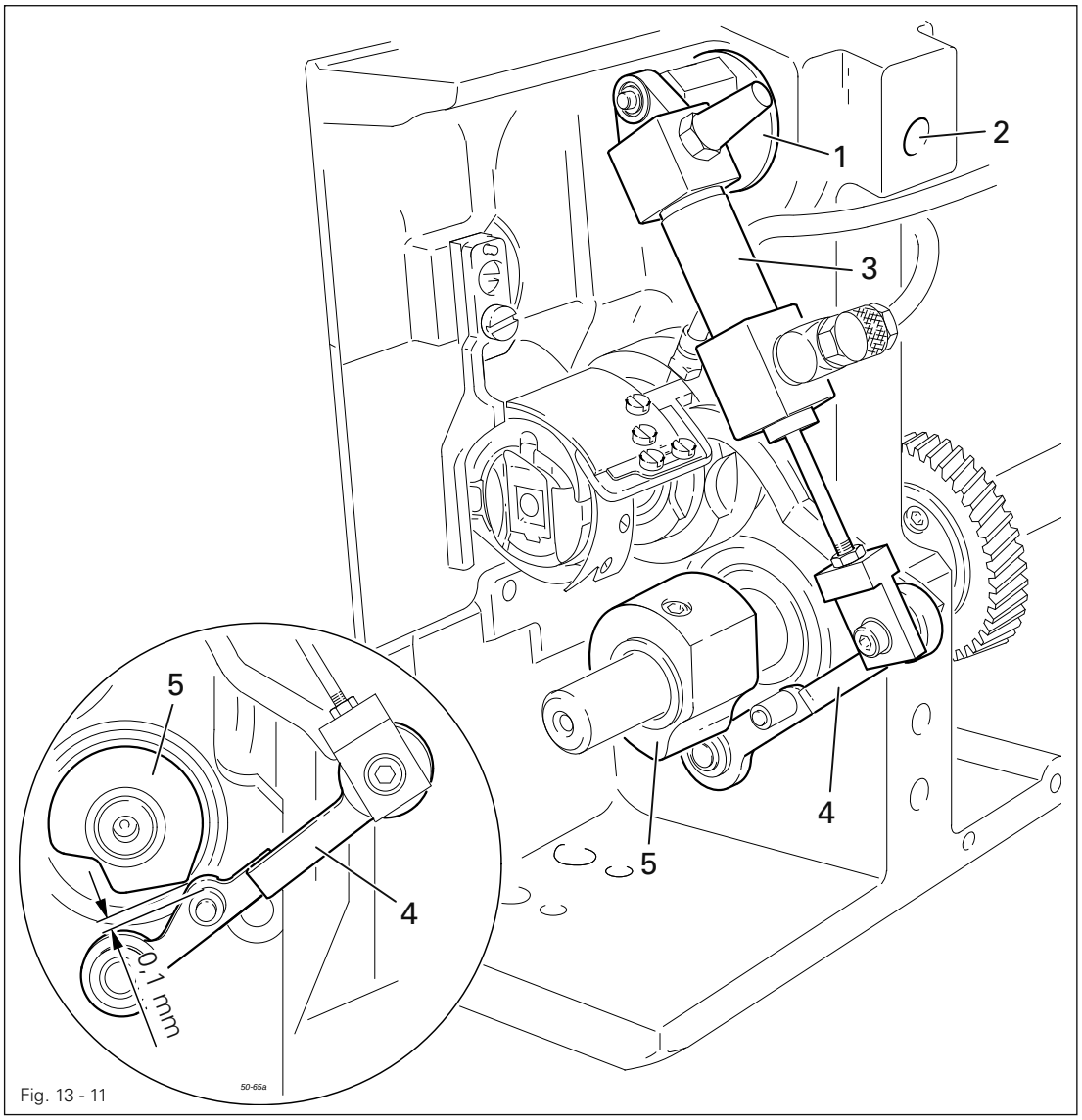

Fig. 13 - 11

- Adjust or turn eccentric **1** (screw **2**) in accordance with the **requirements**.

13.07.03 Lateral adjustment of the thread catcher

Requirement

1. The tip of thread catcher **5** should point exactly towards the centre of the needle.
2. The thread catcher **5** should be horizontal and not touch anything when it moves.

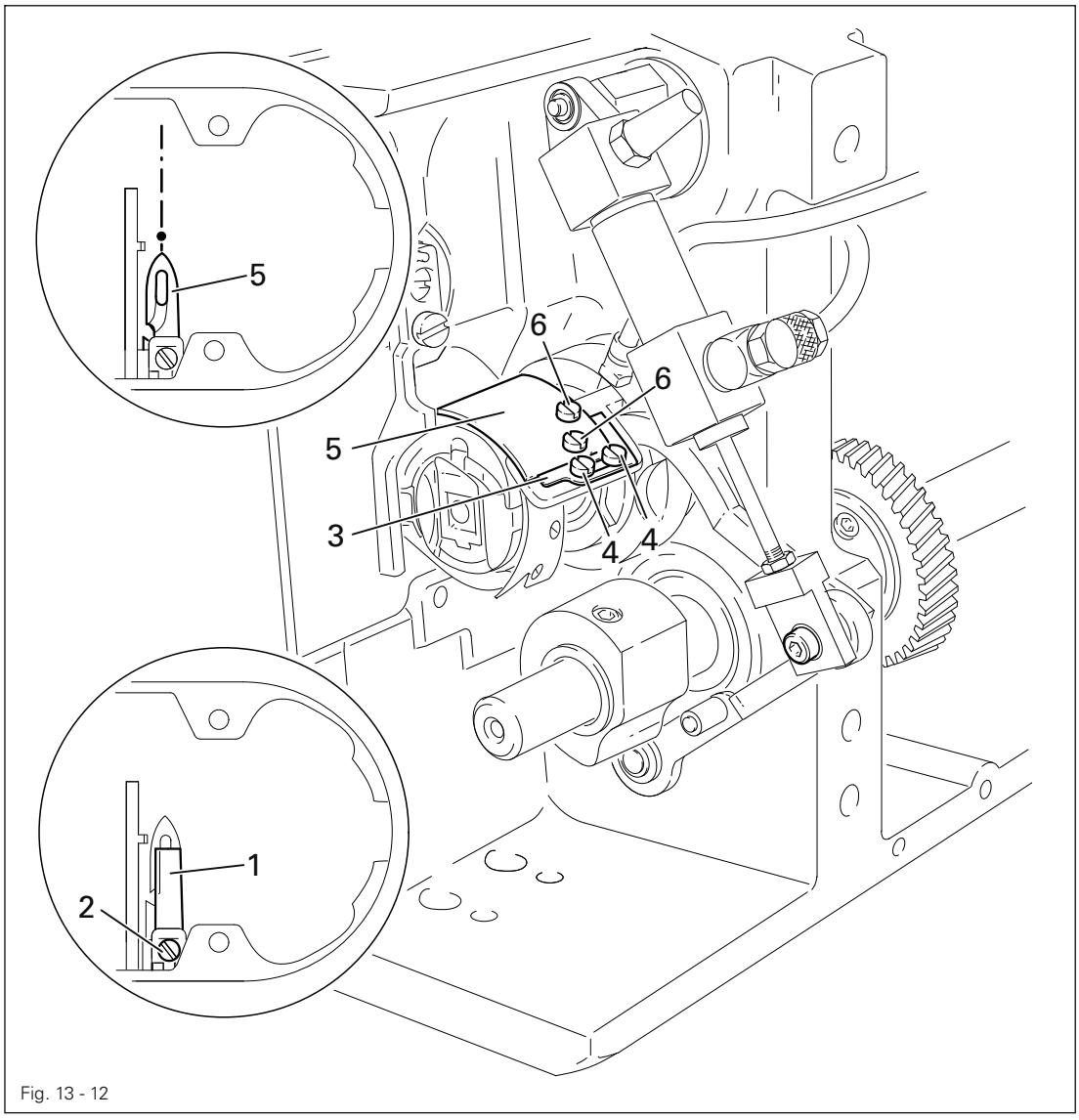

Fig. 13 - 12

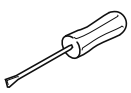

- Remove knife **1** (screw **2**).
- Bring the needle bar to its b.d.c.
- Release stop **3** (screws **4**).
- Position thread catcher **5** (screws **6**) in front of the needle by hand, and align in accordance with the **requirements**.

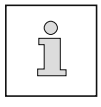

For further adjustments knife **1** remains detached and stop **3** released.

13.07.04 Knife position

Requirement

1. There must be a distance of **4 mm** between the cutting edge of the knife and the needle.
2. The right edge of the knife **1** must not extend beyond the right edge of the thread catcher (see arrow).

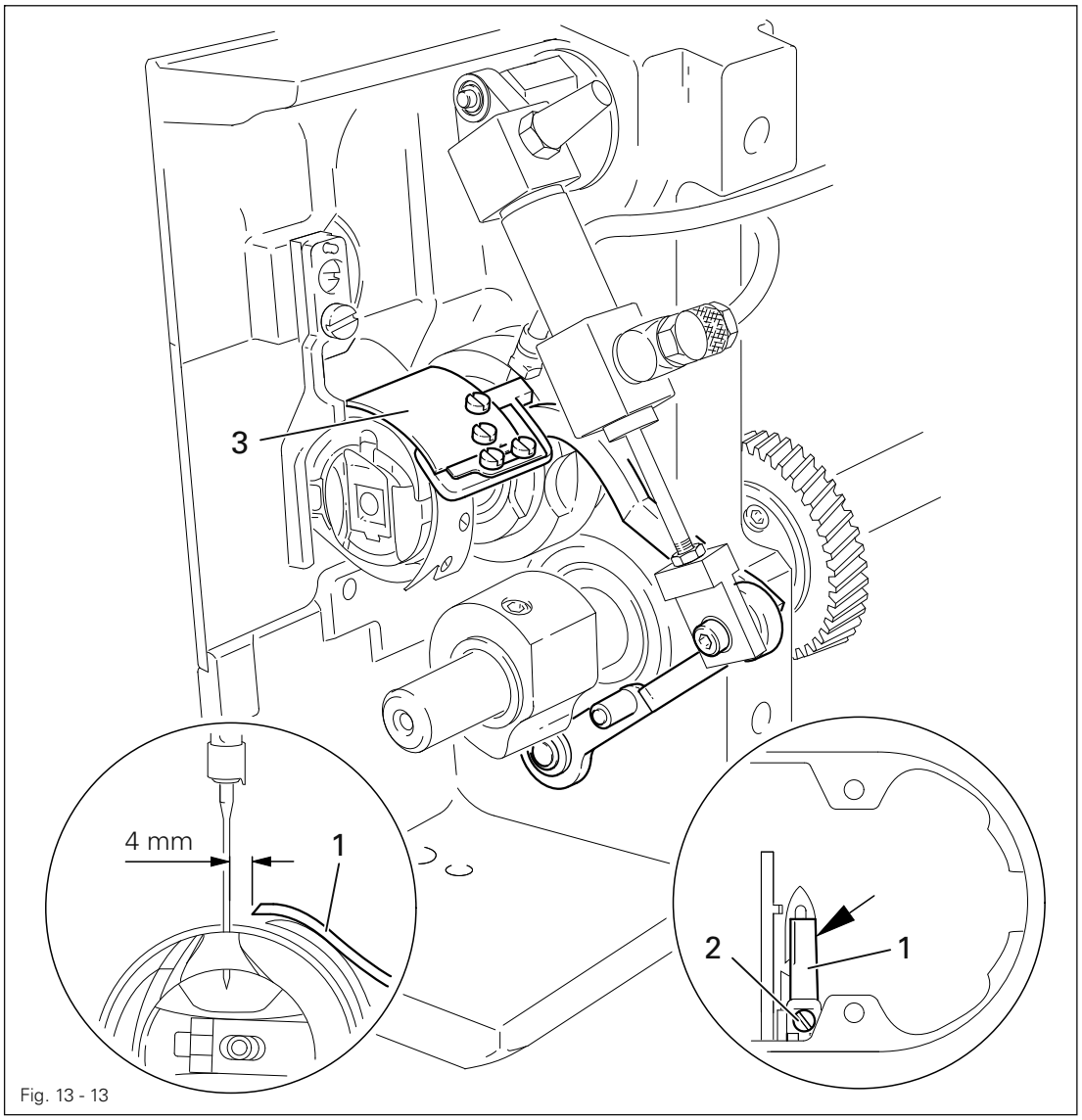

Fig. 13 - 13

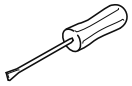

- Bring the needle bar to BDC.
- Slide knife **1** under the locking tab and align according to **requirement 1**.
- Tighten screw **2** lightly.
- Adjust thread catcher carrier **3** by hand until the wedge point in the thread catcher is positioned just in front of the cutting edge of the knife.
- Align knife **1** according to **requirement 2** and tighten screw **2**.

13.07.05 Front point of reversal of the thread catcher

Requirement
When the thread catcher **5** is at its front point of reversal, the rear edge of the thread catcher cutout must be positioned **1 mm** before the bobbin case position finger **6**.

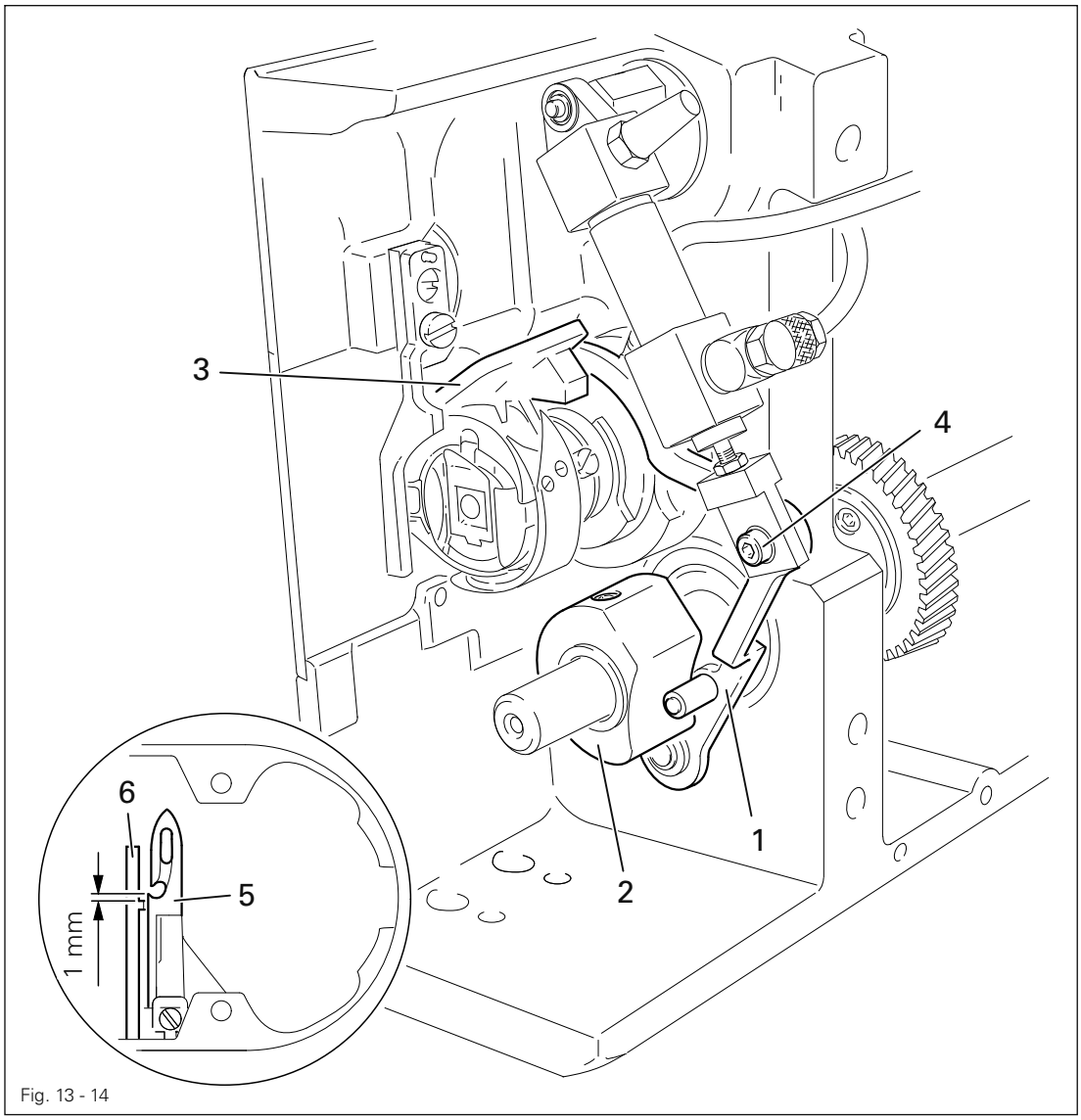

Fig. 13 - 14

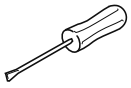

- Swing roller level **1** into the lowest point of the control cam **2**.
- Move thread catcher carrier **3** (screw **4**) according to the **requirement**.

13.07.06 Manual trimming check

Requirement
Two threads must be cut perfectly both left and right in the cutout of thread catcher **1**.

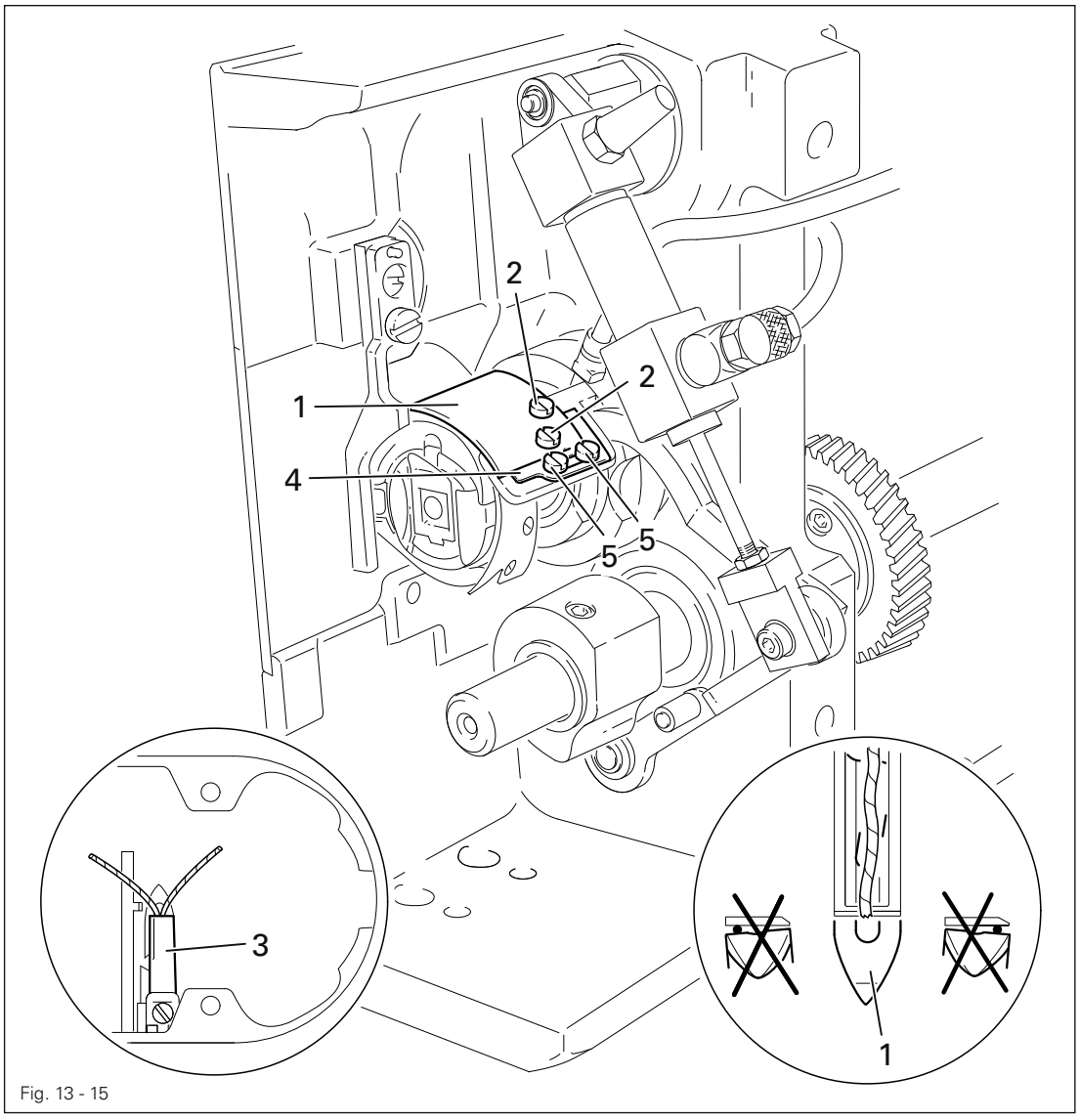

Fig. 13 - 15

- Move thread catcher **1** by hand to its front point of reversal.
- Double the thread and insert into catcher cutout.
- Carry out trimming operation manually.
- If the threads are not cut according to the **requirement**, align thread catcher **1** (screws **2**) with knife **3** accordingly.
- Move stop **4** against thread catcher **1** and tighten screws **5**.
- Check chapter **13.07.03 Lateral alignment of the thread catcher**, and readjust if necessary.

13.07.07 Readjusting the control cam

Requirement
When the end of the thread flange **3** is **2 mm** behind the centre of the catch of the bobbin case position finger **4**, there should also be a **2 mm** distance between the tip of thread catcher **6** and the centre of the catch.

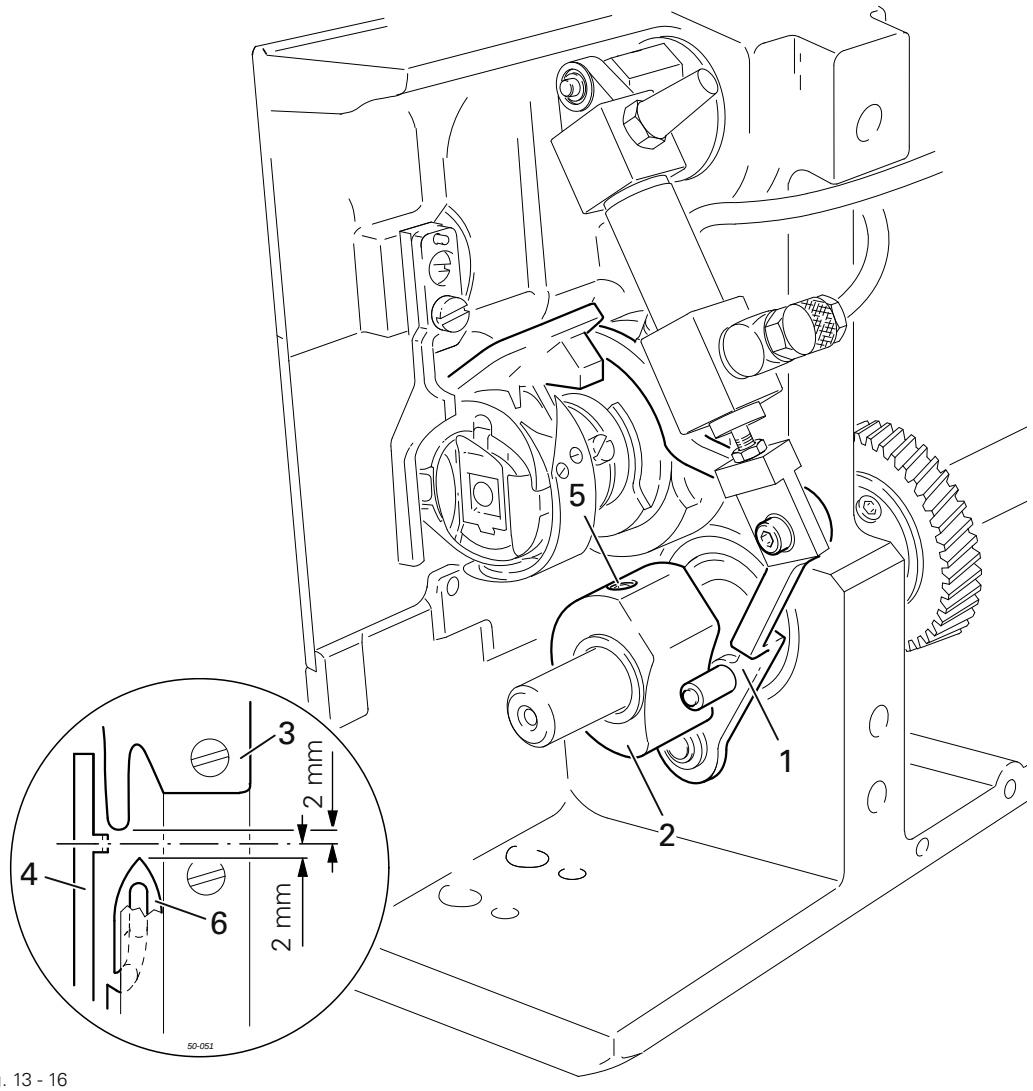

Fig. 13 - 16

- Bring the needle bar to its b.d.c.
- Press roller lever **1** by hand against the control cam **2** and turn the balance wheel until there is a distance of **2 mm** between the end of the thread flange **3** and the centre of the catch of the bobbin case position finger **4**.
- If necessary, adjust control cam **2** (screws **5**) in accordance with the **requirement**.

13.08 Adjusting the feed mechanisms

13.08.01 Aligning the fabric pressure bar

Requirement

1. The fabric should be held evenly along the entire length of the pressure bar **1**.
2. When the pressure bar **1** is in its basic position (right end position) there should be a distance of **0.5 mm** between the guide roller **5** and the pressure bar.

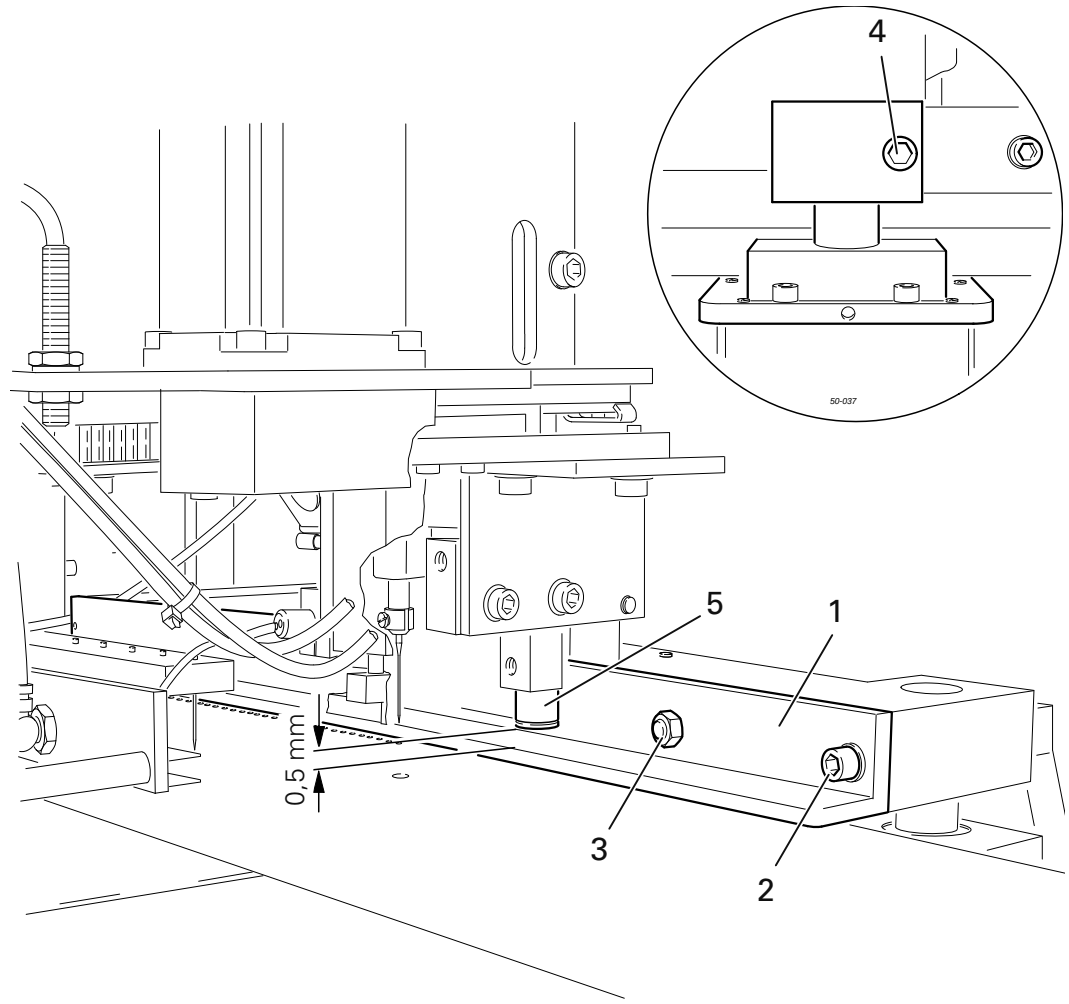

Fig. 13 - 17

- Align pressure bar **1** (screw **2** and nut **3**) in accordance with **requirement 1**.

To control the setting, place the fabric under the pressure bar and lower the pressure bar. It must be possible to draw the fabric out evenly from below the pressure bar along its entire length.

- Adjust pressure bar **1** (screw **4**) in accordance with **requirement 2**.

13.08.02 Aligning the drive unit of the X-axis

Requirement
The bottom edge of the guide rail **3** should be parallel at a distance of **64 mm** below the table top (without cover plate).

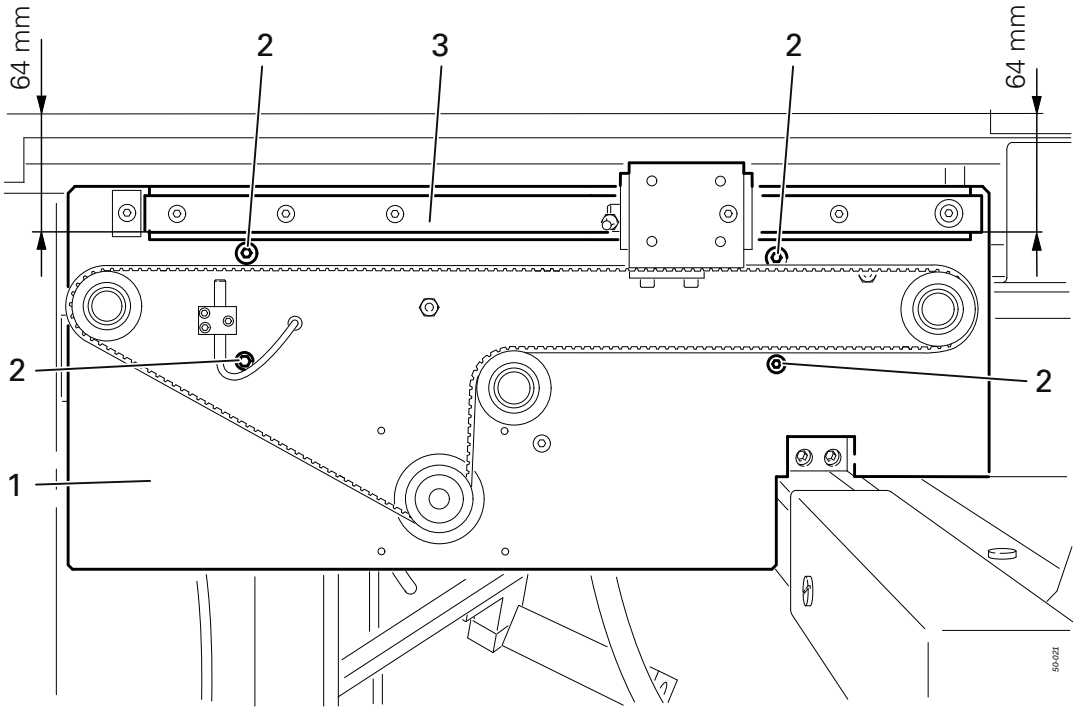

Fig. 13 - 18

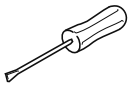

- Align drive unit **1** (Screws **2**) in accordance with the **requirement**.

13.08.03 Tensioning the belt on the drive unit of the X-axis

Requirement
The belt tension should be **200** Nm and tested with measuring device **2**.

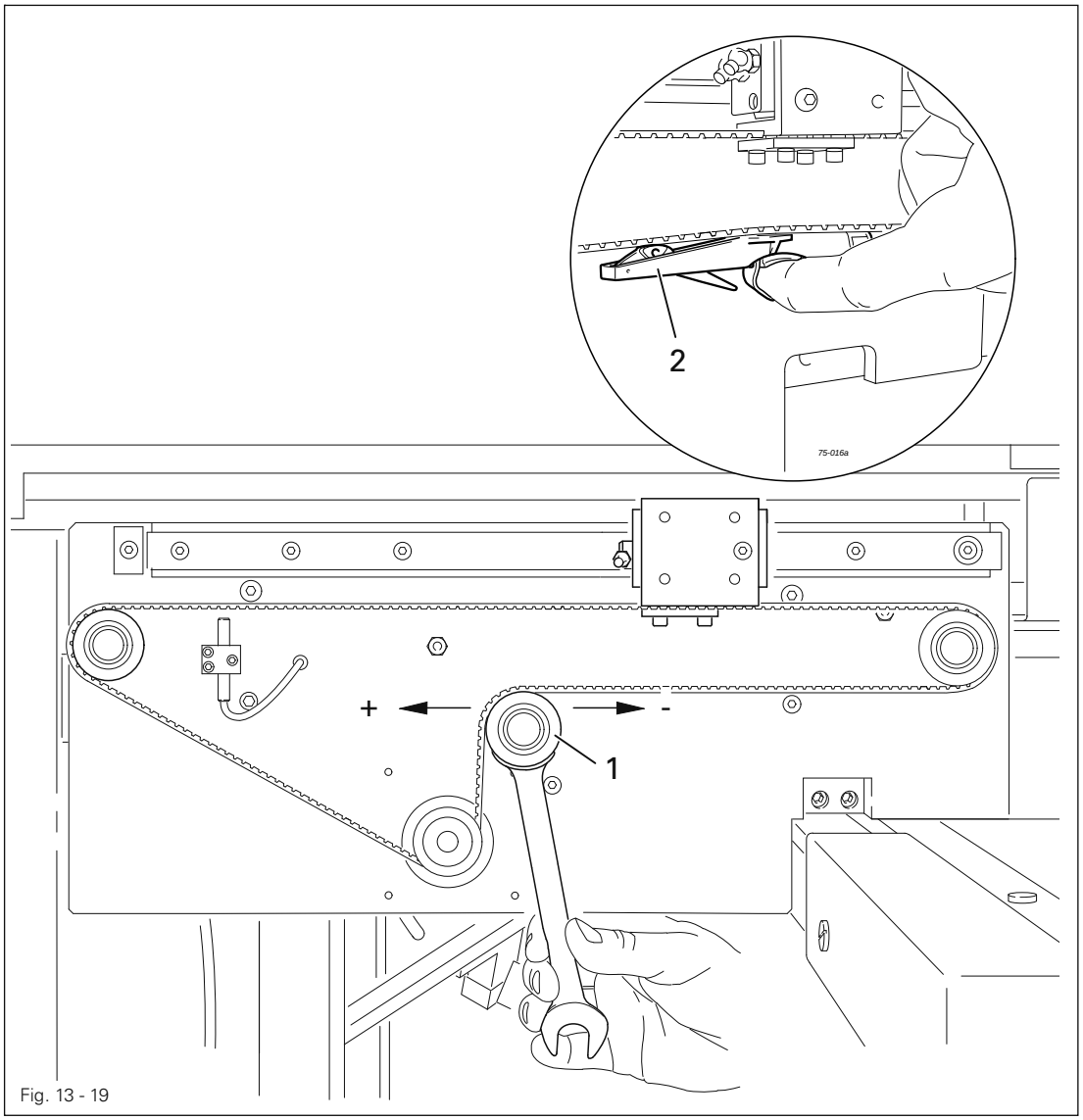

Fig. 13 - 19

- Adjust tensioning roller **1** (counter nut, accessible from rear) in accordance with the **requirement**.

For information about the correct use of measuring instrument **4** (Part No. **99-1**37 380-91) see the enclosed instructions.

13.08.04 Stop on drive unit of the Y-axis

Requirement
Pressure bar **3** must not touch the sewing foot **4**.

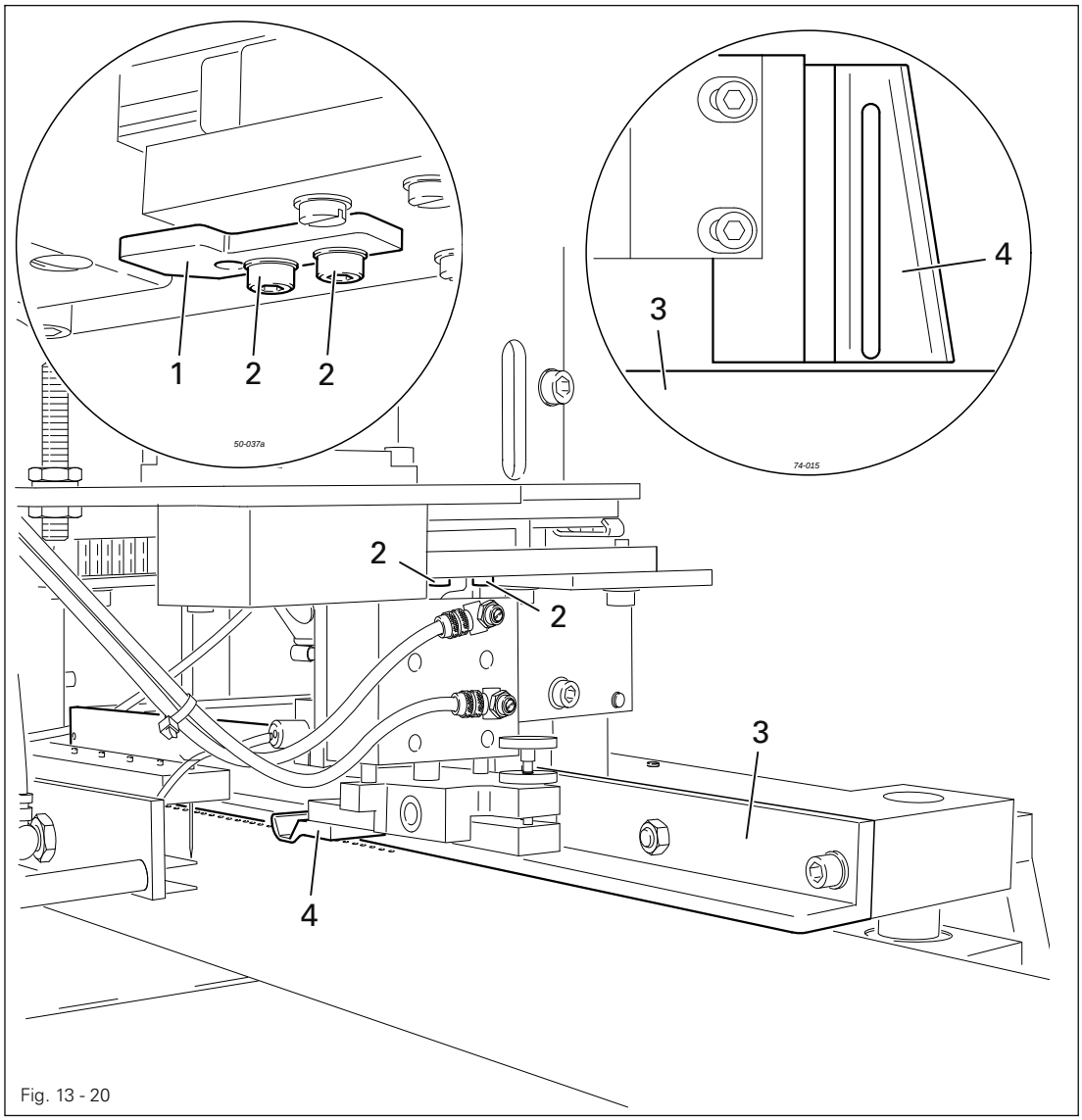

Fig. 13 - 20

- Adjust stop **1** (screws **2**) in accordance with the **requirement**.

13.08.05 Tooth flank play on the drive unit of the Y-axis

Requirement
When the machine is switched on, no play should be felt in the drive unit of the Y-axis

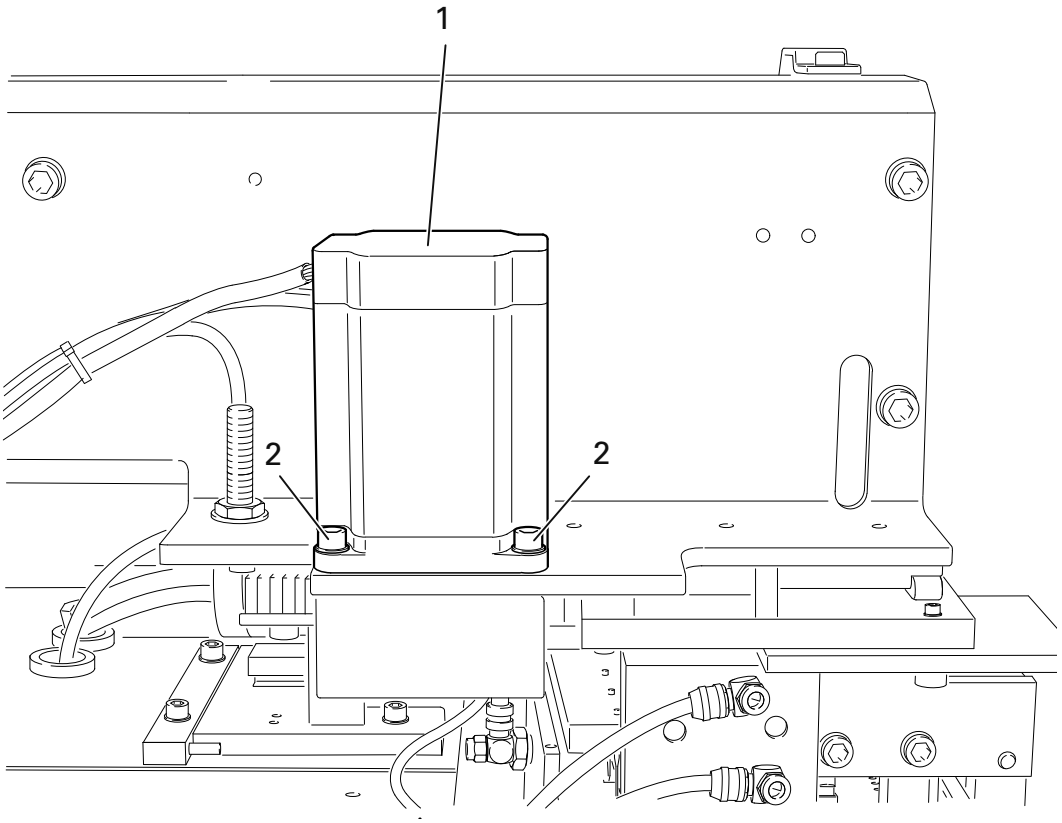

Fig. 13 - 21

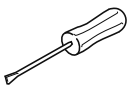

- Move motor **1** (screws **2**, four screws in total) towards the machine case in accordance with the **requirement**.

13.08.06 Needle height of the material take-over unit

Requirement
When the needle strip is lowered, all needles **1** should be positioned **0,5 mm** above the cover plate.

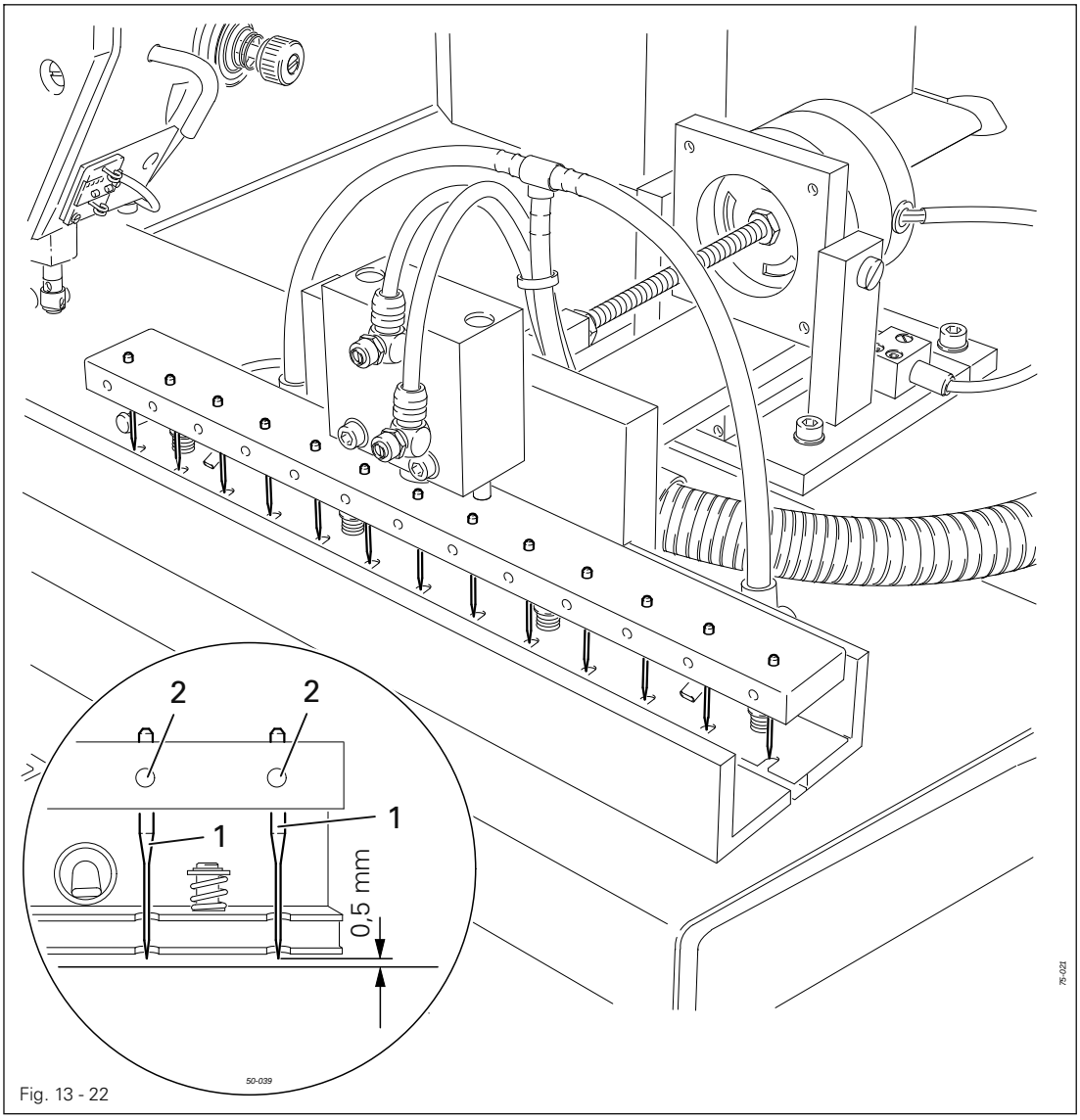

Fig. 13 - 22

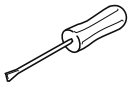

- Switch on the machine.



- Call up the input menu.

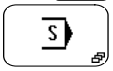

- Call up the service menu.
- Select "OUT**4**" and lower the material take-over unit.
- Adjust needles **1** (screws **2**) in accordance with the requirement.
- Switch off the machine.

13.08.07 Adjusting the loading table

Requirement
When the loading table **3** has been inserted, it should be positioned in the centre of the cutout of the material take-over unit **4**, and parallel to the material take-over unit **4** and the cover plate.

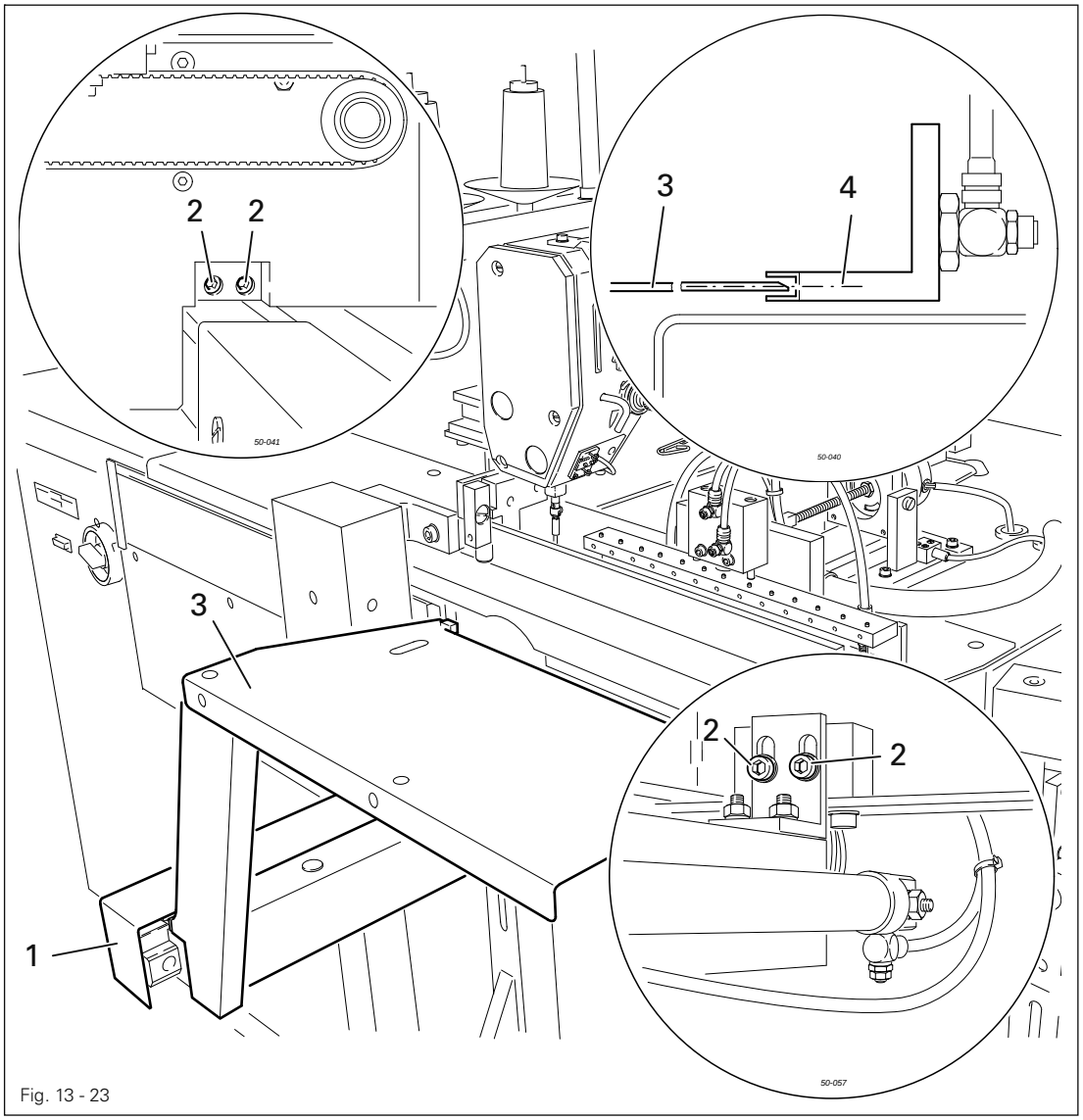

Fig. 13 - 23

- Adjust guide unit **1** (screws **2**) according to the **requirements**.

13.08.08 Adjusting the presser foot

Requirement

1. When presser foot **1** is lowered, the presser foot shoe should be **1.5 mm** above and parallel to the table top.
2. Needle **4** should be located in the centre of the cutout of presser foot **1**.

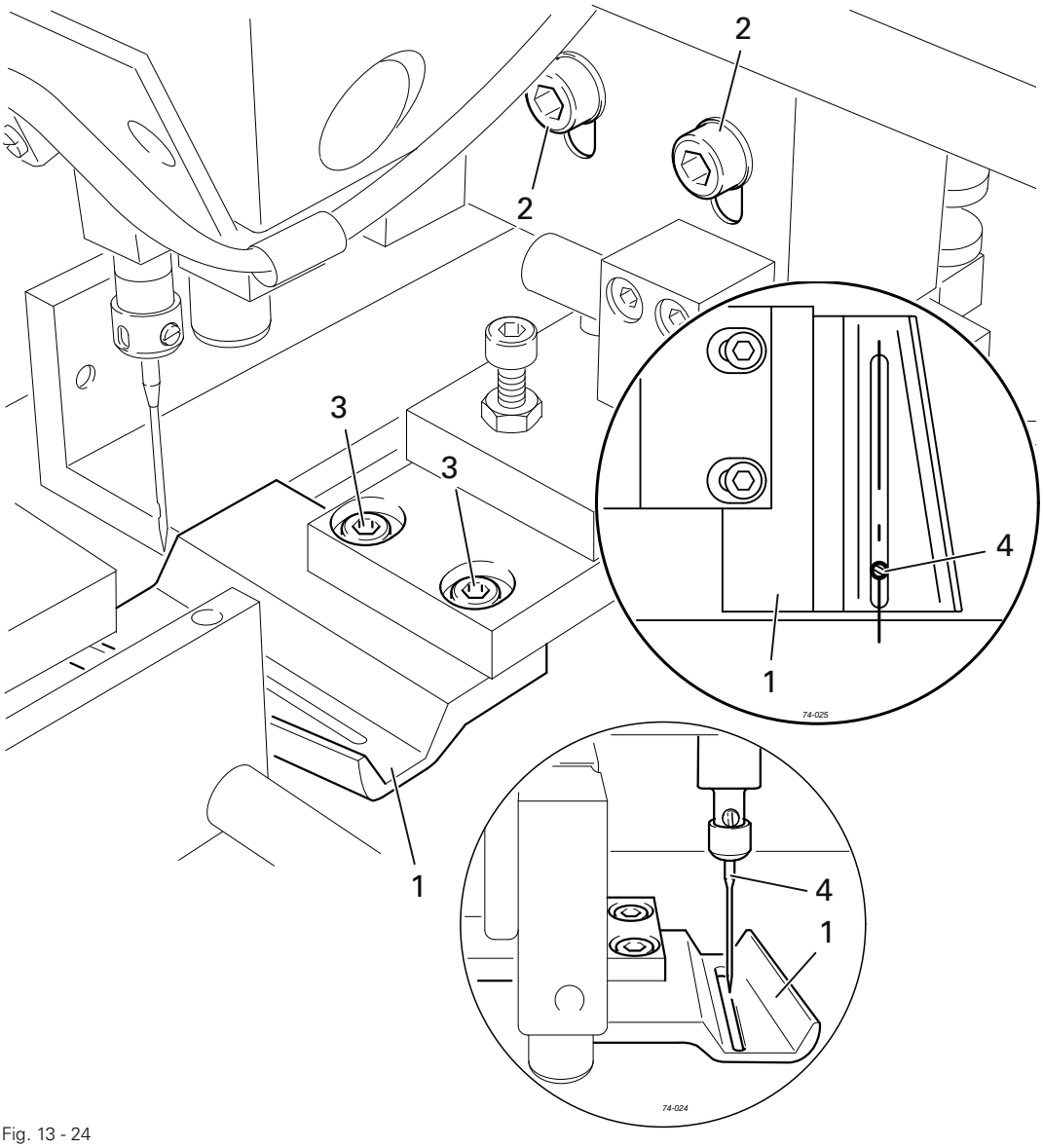

Fig. 13 - 24

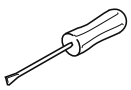

- Adjust presser foot **1** (screws **2**) in accordance with **requirement 1**.
- Adjust presser foot **1** (screws **3**) in accordance with **requirement 2**.

13.09 Service menu

The status of the digital and analog inputs is displayed in the service menu. The outputs can be set or reset manually. In addition it is also possible to call up functions for carrying out a cold start, for loading the operating program and for setting the control panel.

- Switch on the machine.



- Call up the input mode.

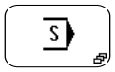

- Call up the service menu.

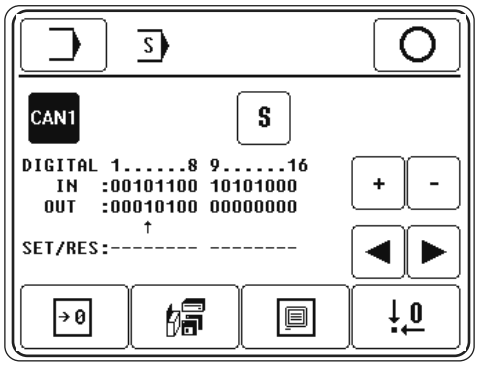

Explanation of the functions



Input mode
This function is used to change to the initial state of the input mode.



Conclude input
This function is used to conclude the input and change into the sewing mode.



Can-nodes
This function is used to select the can-nodes. If the function is selected, the symbol is shown inverse.



Special functions
This function is used to select the special outputs. If the function is selected, the symbol is shown inverse.

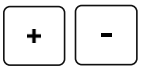

Plus/minus keys
These are used to set (+) or reset (-) the selected output.

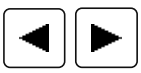

Arrow keys
These are used to select the desired outputs.

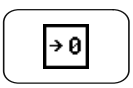

Cold start
This function is used to carry out a cold start, see Chapter **13.09.01 Cold start**.



Loading the operating program
This function is used to load the machine operating program, see Chapter **13.09.02 Loading/ updating the operating program.**

Control panel settings
This function is used to call up a menu for changing the display contrast and for switching the key tone on or off, see Chapter 8.06 Setting the control panel.

Adjusting the zero points
This function is used to call up a menu for setting the zero points.

13.09.01 Cold start

When a cold start is carried out, all newly created or altered programs, as well as all altered parameter settings are deleted!
The machine memory is deleted or set back to the status at the time of delivery.

- Switch on the machine and call up the input mode.
- Call up the service menu.
- Call up the cold start function.

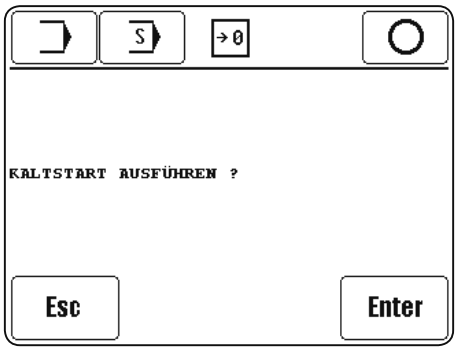

Enter
- Confirm that a cold start is to be carried out.

Explanation of further functions

Input mode
This function is used to change to the initial state of the input mode.

Service menu
This function is used to return to the service menu, see Chapter 13.09 Service menu.

Conclude input
This function is used to conclude the input and change into the sewing mode.

Esc
Esc
The input is interrupted.

13.09.02 Loading / updating the operating program

To boot a new machine software, a sd-card with the needed files has to be plugged in the sd-slot of the control panel.

During the loading of the operating program all data in the machine memory is deleted!

- Switch on the machine and push the button "FORCE UPDATE".

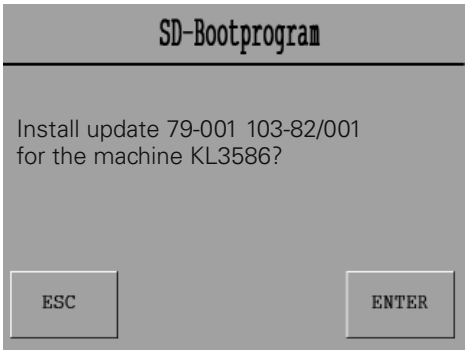

- Start the bootsequence with the key "ENTER".

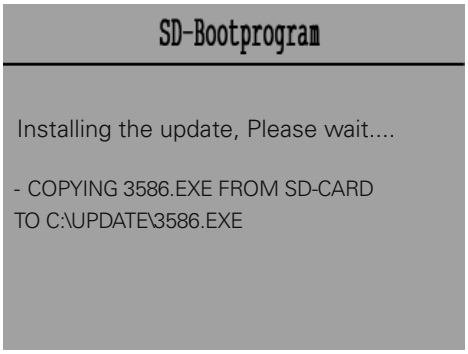

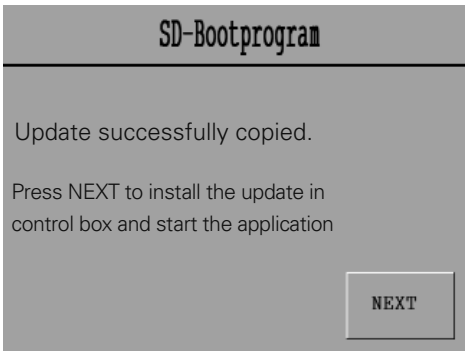

- To install the software, push the key "NEXT".

13.10 Sewing motor adjustments

- Switch on the machine.



- Call up the input mode.

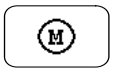

- Call up the seam program input function.

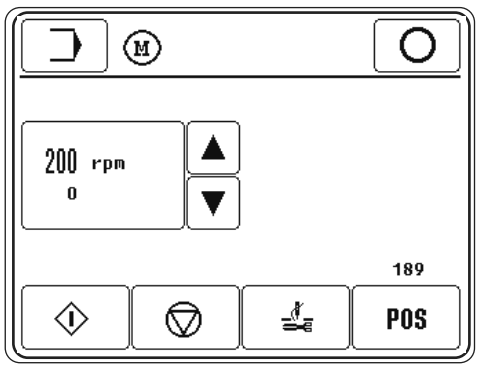

Explanation of the functions



Conclude input
This function is used to conclude the input and change into the sewing mode.

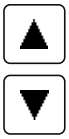

Speed adjustment
This function is used to increase or reduce the set speed.



Sewing motor start
This function is used to start the sewing motor with the set speed.



Sewing motor stop
This function is used to stop the sewing motor again.



Thread trimming cycle
This function is used to run the thread trimming cycle.



Needle function
The current actual position of the needle is displayed.
To set the t.d.c. position of the needle bar, bring the needle bar to the appropriate position by turning the balance wheel and take over this position by operating the "POS" key.

13.11 Parameter settings

All parameters which can be altered are shown in the list of parameters (Chapter **13.11.02**).
A description of how to select parameters and alter the values is given below.

13.11.01 Selecting and altering parameters.



- Switch on the machine and call up the input mode.



- Call up the parameter input function.

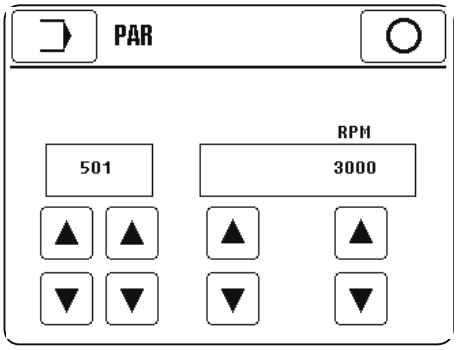

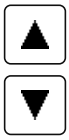

- Select the parameter separately by group (hundred figure) and parameter within the function group.

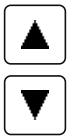

- Alter the value of the selected parameter.



- Quit parameter input function.

13.11.02 List of parameters

Group	Parameter	Description	Setting range	Set value
100	101	Bobbin thread monitor 0 = off; 1 = counter	0 - 1	1
	102	Needle thread monitor 0 = off; 1 = on	0 -1	1
	103	Fade-out stitches needle thread monitor The number of stitches, for which the needle thread monitor is not activated at the start, is changed.	0 – 99	5
	104	Reaction time needle thread monitor The sensitivity of the needle thread monitor is changed (1 = quickest reaction, max. sensitivity)	1 - 9	1
	105	Move material take-over unit forwards 0 = off; 1 = on	0 - 1	0
	106	Position carriage for threading 0 = off; 1 = on	0 - 1	1
	107	Intermediate stop 0 = off 1 = intermediate stop in each program 2 = intermediate stop only for program numbers > 90 in each program group	0 - 2	0
	108	Endurance test /test function 0 = off; 1 = on	0 - 1	0
	109	Automatic switch to next sequence 0 = off; 1 = on	0 - 1	1
200	201	No. of start backtack stitches	1 - 9	4
	202	Stitch length for condensed start stitches [0.1 mm]	10 - 30	12
	203	Stitch length for condensed start stitches [0.1 mm]	1 - 9	5
	204	No. of end backtack stitches	1 - 9	4
	205	Stitch length for condensed end stitches [0.1 mm]	10 - 30	12
	206	No. of condensed end stitches	1 - 9	5
	207	Seam end angle [°]	0 - 90	30
	208	No. of stitches for end of seam angle	1 - 9	5

Group	Parameter	Description	Setting range	Set value
200	209	Basting seam-start stitch length [0.1 mm]	10 - 60	20
	210	Basting seam-no. of start stitches	1 - 9	3
	211	Basting seam-end stitch length [0.1 mm]	10 - 60	40
	212	Basting seam-no. of end stitches	1 - 9	4
300	301	NIS (carriage start) [°], see Chapter 13.11.03	80 – 150	110
	302	Take-up lever head [°]	70 – 90	76
	303	Thread trimming position on [°] Time changed when impulse given to thread trimmer valve for thread trimming (° = degrees after t.d.c. needle bar).	160 – 360	200
	304	Reset position [°]	0 - tdc take-up lever	17
400	401	Time for air blast [0.01 s]	10 – 250	30
500	501	Max. speed	200 - 4500	4500
	502	Bartack speed (reduced speed)	200 - 4500	4500
	503	Cutting speed (positioning speed)	100 - 250	200
	504	Speed for slow start stitches	200 - 2000	1000
	505	Slow start stitches No. of stitches changed for sewing with reduced speed at start	0 – 99	2
	506	Basting seam speed	200 - 1000	1000

13.11.03 Carriage start (NIS)

This function changes the time for starting the motors of the clamp drive (º = degree after t.d.c. needle bar).

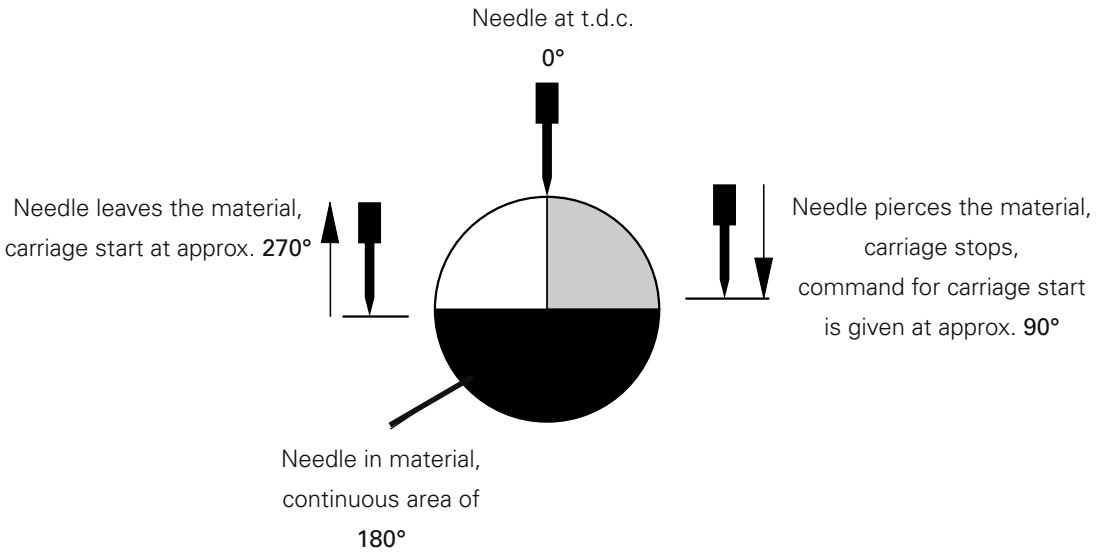

The command for the carriage start is given when the needle pierces the material. The carriage, however, starts half a revolution later (180º), when the needle leaves the material.

Under certain circumstances the stitch formation can be influenced by the setting.

14 Control unit

14.01 Basic setting / Diagnosis / Pin assignment

14.01.01 Power unit A30

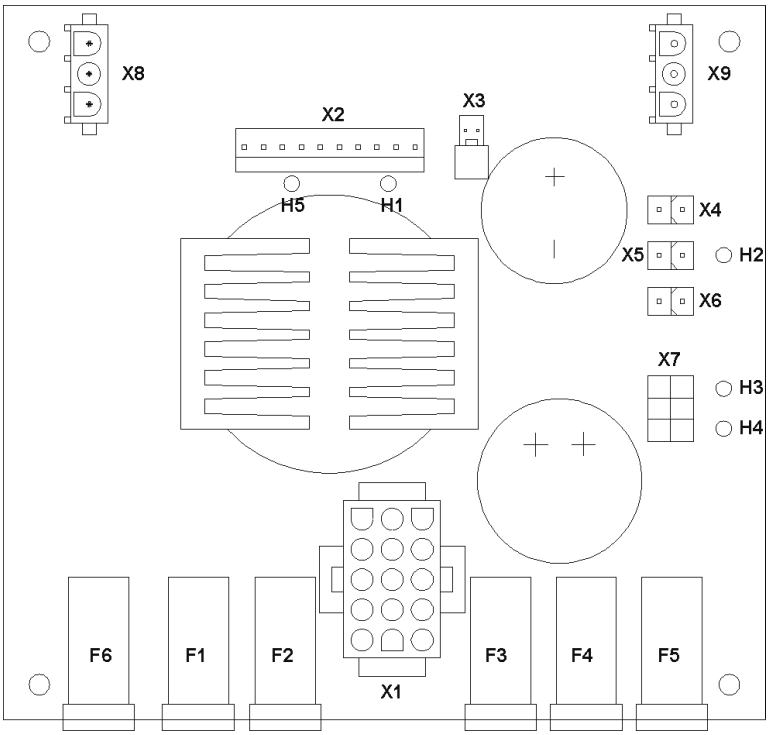

Voltage	Fuse	LED
230 V AC (mains)	F6 (6.3 A T)	-
5 V DC (processor)	F1 (2 A T)	H1
18 V DC (control panel)	F2 (500 mA T)	H5
24 V DC (I/O)	F3 (2.5 A T)	H2
80 V DC (stepping motor)	F4 (6.3 A T)	H3
24 V DC (stepping motor)	F5 (500 mA T)	H4

Pin assignment

X 1 (transformer secondary)

PIN	Signal	PIN	Signal
3	V1 18 V AC 1	7	V4 57 V AC 1
9	V1 18 V AC M	13	V4 57 V AC M
6	V1 18 V AC 2	10	V4 57 V AC 2
12	V2 18 V AC	11	V5 18 V AC
15	V2 18 V AC	14	V5 18 V AC
2	V3 18 V AC 1	5	
4	V3 18 V AC M	8	
1	V3 18 V AC 2		

X 2 (BS3)

PIN	Signal	PIN	Signal
1	GND 5 V	4	5 V
2	GND 5 V	5	5 V
3	GND 5 V	6	5 V
7	18 V AC	8	18 V AC
9	POWERF	10	V1 18 V

X 3 (Fan), X4, X5, X6

PIN	Signal	PIN	Signal
1	24 V (I/O)	2	GND 24 V

X 7 (sm-end phase)

PIN	Signal	PIN	Signal
1	24 V (SM)	4	GND 24 V (SM)
2	80 V (SM)	5	GND 80 V (SM)
3	80 V (SM)	6	GND 80 V (SM)

X 8 (Mains)

PIN	Signal	PIN	Signal
1	PE	2	N
3	L1		

X 9 (Transformer primary)

PIN	Signal	PIN	Signal
1	PE	2	N
3	L1		

14.01.02 Basic control unit A20

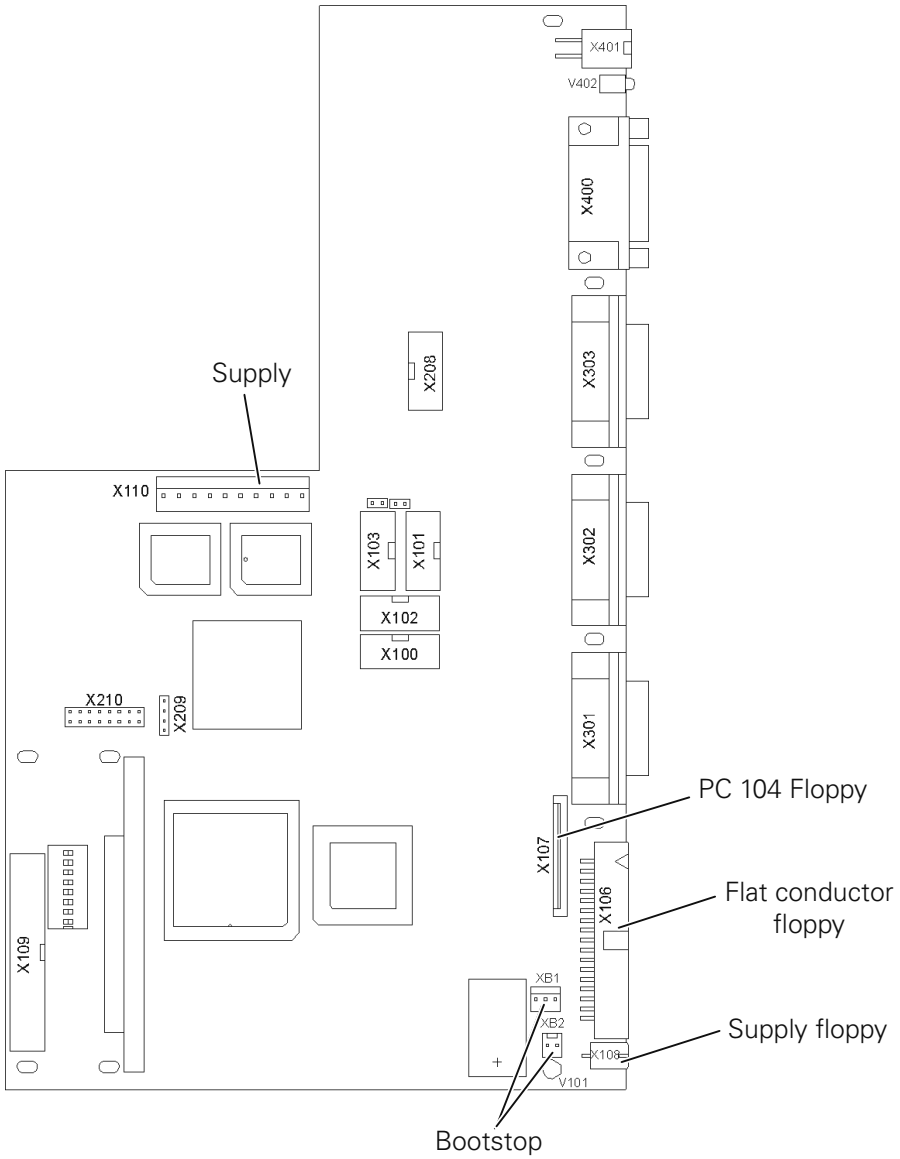

Pin assignment

X103 (COM1)

X101 (COM2)

PIN	Signal	PIN	Signal
1	Vterm1	6	
2	RxD	7	RTS
3	TxD	8	CTS
4		9	Vterm2
5	GND		

X301 (X-axis / motor 1)
X302 (Y-axis / motor 2)
X303 (Depth / motor 3)

PIN	Signal	PIN	Signal
1	Pulse +	9	Pulse -
2	Direction +	10	Direction -
3	Gate/Enable +	11	Gate/Enable -
4	Current control +	12	Current control –
5	Vex +	13	Vex -
6			
7	Input 2 +	14	Input 2 -
8	Input 1 +	15	Input 1 –

X208 (CAN-Bus)

PIN	Signal	PIN	Signal
1	P8HA +	6	
2	P8HA -	7	
3	DoRi +	8	DoRi -
4	GND	9	GND
5			

X400 (main drive)

PIN	Signal	PIN	Signal
1	Screening	14	A_A
2	TxD_A	15	A_B
3	RxD_A	16	B_A
4	TxD_B	17	B_B
5	RxD_B	18	I_A
6		19	I_B
7	GND	20	GND
8		21	A_OC
9	R1_A	22	B_OC
10	R1_B	23	I_OC
11	R2_A	24	V2
12	R2_B	25	GND
13	GND	26	Vex

X401 (thread monitor)

PIN	Signal	PIN	Signal
1	+U_ULN	2	+U_ULN
3	POUT7	4	POUT8

14.01.03 Sewing drive A22

Before leaving the factory the sewing drive controller is equipped with the necessary operating software. This software may only be replaced by appropriately trained personnel.

The LED "Power on" shows that the unit is ready for operation. Diagnosis functions and fuses are not available. If error messages appear on the machine display, see **Chapter 14.02.02 Sewing motor errors**.

Pin assignment

X2 (Synchronizer)

PIN	Signal	PIN	Signal
1	KA	6	
2	KB	7	
3	KC	8	
4	ADTC2	9	GND
5	+ 5V		

X3 (Interface)

PIN	Signal	PIN	Signal
1	GND	14	A
2	TxD	15	A\
3	RxD	16	B
4	TxD\	17	B\
5	RxD\	18	Index
6		19	Index\
7	GND	20	
8		21	
9	REF1	22	
10	REF1\	23	
11	REF2	24	
12	REF2\	25	
13	GND	26	

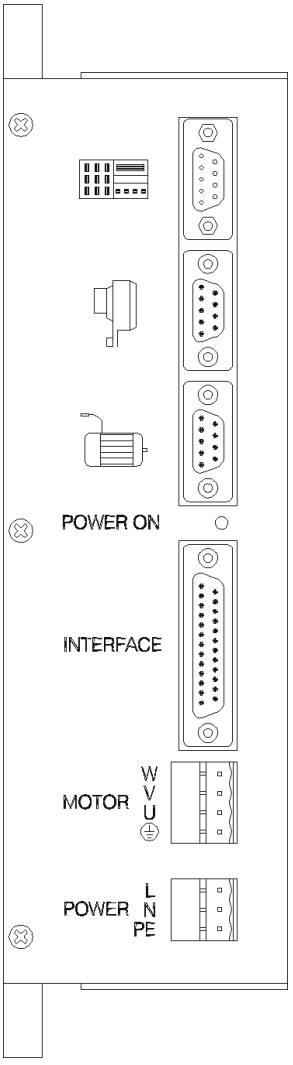

X6 (Mains)

PIN	Signal	PIN	Signal
1	PE	2	N
3	L1		

X14 (Motor)

PIN	Signal	PIN	Signal
1	PE	3	V
2	U	4	W

14.01.04 Stepping motor drive A40

The stepping motor controller has the following initial setting:
Motor **1**: **3.5** A, SIN **8**
Motor **2**: **4** A, SIN **8**
Motor **3**: **2** A, semi-cut
Current reduction **50** %, with coupling of motor **1** and motor **2**
These settings are loaded. Software number: **79-001 102-91/00**1



For information about LED status indications see Chapter **14.02.05 Errors - Stepping motor drive.**

PIN assignment

X5 (bootstrap)

PIN	Signal	PIN	Signal
1	GND	2	BOOTSTRAP
3	RESIN\	4	n.c.
5	TxD	6	RxD
7	12 Vin	8	Vpp Processor
9	5 V	10	n.c.

X10 (carriage control)

PIN	Signal	PIN	Signal
1	12 V	3	GND
2	Switch	4	n.c.

X1 (CAN-Bus)

PIN	Signal	PIN	Signal
1		6	
2		7	
3	DoRi +	8	DoRi -
4	GND	9	GND
5			

X6 (supply)

PIN	Signal	PIN	Signal
1	+24 VSM	4	GND 24 VSM
2	+80 VSM	5	GND 80 VSM
3	+80 VSM	6	GND 80 VSM

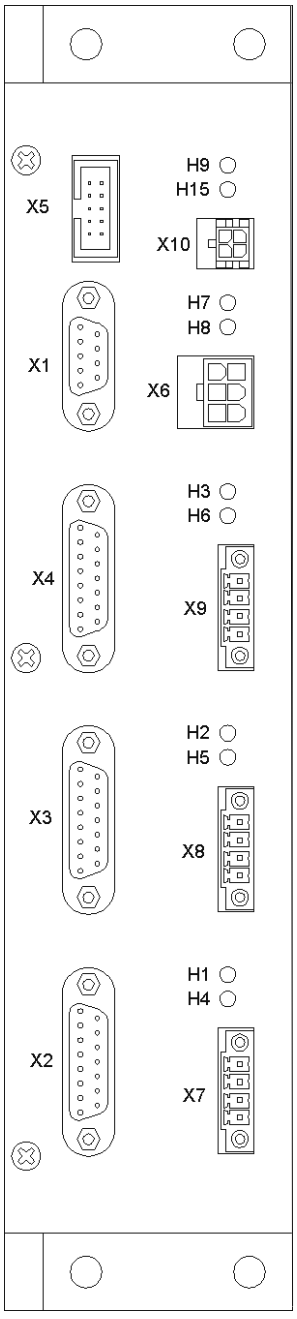

X2, X3, X4 (Drive motor 1 to 3)

PIN	Signal	PIN	Signal
1	Pulse +	9	Pulse -
2	Direction +	10	Direction -
3G	ate/Enable +	11	Gate/Enable -
4	Current control +	12	Current control –
5	n.c.	13	n.c.
6	n.c.	14	Output – (not assigned)
7	Output + (not assigned)	15	Ready -
8	Ready +		

X7, X8, X9 (motor connection motor 1 to 3)

PIN	Signal
1	Coil 1
2	Coil 1
3	Coil 2
4	Coil 2

14.01.05 CAN node A10

The CAN node has following basic setting: address (S**200**) = **1**

Pin assignment

X300 (outputs)

PIN	Signal	PIN	Signal
1	OUT2	19	GND
2	OUT1	20	GND
3	OUT4	21	GND
4	OUT3	22	GND
5	OUT6	23	GND
6	OUT5	24	GND
7	OUT8	25	GND
8	OUT7	26	GND
9	OUT10	27	GND
10	OUT9	28	GND
11	OUT12	29	GND
12	OUT11	30	GND
13	OUT14	31	GND
14	OUT13	32	GND
15	OUT16	33	GND
16	OUT15	34	GND
17			
18			

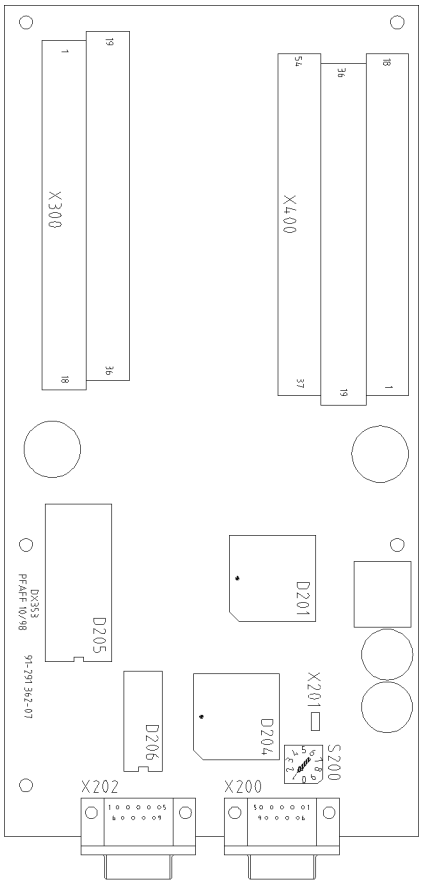

X400 (Inputs)

PIN	Signal	PIN	Signal	PIN	Signal
1		19			
2		20			
3	IN1	21	GND	39	24 V
4	IN2	22	GND	40	24 V
5	IN3	23	GND	41	24 V
6	IN4	24	GND	42	24 V
7	IN5	25	GND	43	24 V
8	IN6	26	GND	44	24 V
9	IN7	27	GND	45	24 V
10	IN8	28	GND	46	24 V
11	IN9	29	GND	47	24 V
12	IN10	30	GND	48	24 V
13	IN11	31	GND	49	24 V
14	IN12	32	GND	50	24 V
15	IN13	33	GND	51	24 V
16	IN14	34	GND	52	24 V
17	IN15	35	GND	53	24 V
18	IN16	36	GND	54	24 V

X200 (CAN.Bus)

PIN	Signal	PIN	Signal
1	P8HA +	6	
2	P8HA -	7	
3	D0Ri +	8	DoRi -
4	GND	9	GND
5			

14.02 Description of the error messages

14.02.01 General errors

Display	Description
ERROR: 3	Error in allocation EMS memory
ERROR: 4	C167 not reacting
ERROR: 5	Boot file (c167boot.bin) cannot be opened
ERROR: 6	Error in flash-programming
ERROR: 7	Error when opening a file
ERROR: 8	Battery
ERROR: 9	Firmware version conflict
ERROR: 10	CAN-error (reset)
ERROR: 11	CAN-error (no. of nodes)
ERROR: 12	Communication main drive during Power On
ERROR: OPERATING DATA CHECK SUM (COLD START CARRIED OUT)	Operating data check sum
NEW OPERATING SOFT-WARE (COLD START CARRIED OUT)	New operating software
COLD START CARRIED OUT	Cold start
ERROR: 101	C167-error
ERROR: 102 (#Node no.) (Status)	CAN-error, status = Bit1 - node inactive, Bit 8 - short circuit
ERROR: 103	End stage (SmX)
ERROR: 104	End stage (SmY)
ERROR: 105	Error compressed air
ERROR: 201 (#Sewing motor error)	Sewing motor error (see Chapter 14.02.04 Sewing motor error)
ERROR: 202 (cause)	Move locked
ERROR: 203 (cause)	Move to zero point locked
ERROR: 204 (cause)	Sewing locked
ERROR: 205 (cause)	Move to starting point locked
ERROR: 206 (cause)	Position carriage locked
ERROR: 207 (cause)	Tacting locked
ERROR: 208 (cause)	Position pressure bar during threading locked
ERROR: 209 (cause)	Move to material take-over locked
ERROR: 210	Command byte of NM-interface not free, command could not be given

Display	Description
ERROR: 211	Coordinates outside the sewing area
ERROR: 212	Stitch length too long
ERROR: 213	Carriage zero point not found
ERROR: 214	No carriage start NIS
ERROR: 215	Ramp not completed
ERROR: 216	Material take-over (deep) zero point not found
ERROR: 217	Needle thread error
ERROR: 218	Bobbin thread error, change bobbin
ERROR: 219	Bobbin flap not closed
ERROR: 220	Incorrect clamp code
ERROR: 301	Program too large
ERROR: 302	Contradiction between progpar and progload
ERROR: 303	Flash reading error or defective program
ERROR: 304	Memory overflow
ERROR: 305	Invalid carriage position
ERROR: 306	Invalid depth position
ERROR: 307	Invalid correction value starting point
ERROR: 308	Invalid needle zero point
ERROR: 309	Machine not in basic position
ERROR: 310	File not on source
ERROR: 311	Source reading error, file cannot be opened
ERROR: 312	Target writing error, file cannot be opened
ERROR: 313	Source reading error
ERROR: 314	Target writing error
ERROR: 315	File config. cannot be opened
ERROR: 316	Error when opening MDAT file
ERROR: 317	Writing error in MDAT file
ERROR: 318	Machine data identification incorrect
ERROR: 319	Error when reading from MDAT file
ERROR: 320	Program with incorrect machine class
ERROR: 321	Program with incorrect machine version
ERROR: 322	Program with incorrect data set version
ERROR: 323	Incorrect program number
ERROR: 324	No carriage start, NIS
ERROR: 325	Flash writing error
ERROR: 330 (#stitch generation error) (#sector number)	Stitch generation error
ERROR: 341 (#sewing motor error)	Sewing motor error(see Chapter **14.02.04** Sewing motor errors)

Display	Description
ERROR: 342 (#program number)	Incomplete program number
ERROR: 343 (#program number)	Program too large
ERROR: 345 (#program number)	Flash reading error or defective program
ERROR: 346 (#program number)	Pattern outside sewing area
ERROR: 347 (#program number)	Seam over fold (bend too large)
ERROR: 348 (#program number)	Basting seam length shorter than 50 mm
ERROR: 349 (#program number)	Basting seam too short
ERROR: 350 (#program number)	Inadmissible program number
ERROR: 351 (#program number)	Max. possible depth exceeded
PROGRAM XX NOT IN MEMORY	Program XX does not exist
ERROR: 370:	Correction starting point too large
ERROR: 371:	Depth too large
ERROR: 372:	Waist length > dart length, or hip length > waistband pleat length
ERROR: 373:	Waist depth > dart depth + 5 or Hip depth > waistband pleat depth + 5
ERROR: 374:	Waist depth too large
ERROR: 375:	Move in y-direction too large
ERROR: 376:	Depth too large for basting seam
ERROR: 377:	Basting seam start > basting seam end
ERROR: 378:	Basting seam start < waistband pleat length or hip length
ERROR: 379:	Waistband pleat depth-end > hip depth
ERROR: 380:	Basting seam end < waistband pleat length
ERROR: 381:	Basting seam depth too large
ERROR: 401	Text file cannot be opened
ERROR: 402	Error when reading text file
ERROR: 403	Error when allocating memory space for the texts
ERROR: 501	Error when opening file "pikto.hex" or "vorlagen.hex"
ERROR: 502	No acknowledgement from control panel

14.02.02 CAN-errors

Error byte	Description
bit7	End stage error (short circuit)
bit6	-
bit5	-
bit4	Receive status (waiting for input object)
bit3	Transmit status (transmit output object)
bit2	Transmit status
bit1	Node time out
bit0	Node active

14.02.03 Stitch generation errors

Display	Description
1	Start backtack too large
2	Start backtack too large
3	Condensed start stitches too large
4	Wrong type of bartack
5	Bartack length > 6 mm
11	x-co-ord.> xsewing area _max.
12	x-co-ord.< xsewing area _min
13	y-co-ord.> xsewing area _max.
14	y-co-ord.< xsewing area _min
15	Bartack at starting point is more than L2 and ARSZ< 2

14.02.04 Sewing motor errors

Display	Description
1	Transmission error
2	Timeout serial interface
3	Check sum error in incoming data
4	Timeout command
30h (48)	Timeout-slave expired (command string incomplete)
31h (49)	Incorrect command code
32h (50)	Framing or parity error
33h (51)	Check sum incorrect
34h (52)	Incorrect date request
35h (53)	No parameter programmable (motor operation)
36h (54)	Parameter does not exist
37h (55)	Incorrect parameter value
38h (56)	EEPROM being programmed
39h (57)	Incorrect machine speed
3Ah (58)	Incorrect position
3Bh: (59)	Path for guided positioning too short

Display	Description
3Ch: (60)	Reset of position counter not possible (motor running)
3Dh: (61)	Turning to tdc after mains on not permitted
3Eh: (62)	System mark not recognised
3Fh: (63)	Target position < 3 incr. away from count position
40h - 4Fh -	
50h: (80)	Network control (failure of 2 network half waves)
51h: (81)	Error power electronics during initialization
52h: (82)	Short circuit in motor
53h: (83)	Mains voltage off recognized
54h: (84)	Error power electronics in operation
55h: (85)	No increments
56h: (86)	Motor blocked
57h: (87)	Commutation transmitter connector missing
58h: (88)	Increment transmitter connector missing
59h: (89)	Fault in motor running (target speed not reached)
5Ah: (90)	-
5Bh: (91)	Regulating algorithm blocked
5Ch - 69h -	
6Ah: (106)	EEPROM not programmable
6Bh: (107)	EEPROM missing
6Ch: (108)	Master reset carried out
6Dh: (109)	-
6Eh: (110)	Residual path for path-controlled, guided delay ramp too short
6Fh: (111)	Slave has received 5 successive garbled messages
70h: (112)	Time-out over
71h - FFh -	

14.02.06 Errors – Stepping motor drive

If problems occur with the stepping motor drive during the operation, an error might have occurred in the stepping motor controller.
The error message is indicated by LEDs on the stepping motor controller.

LED	Meaning
H 9 (red)	Temperature too high in end phase
H 15 (red)	End phase ready
H 7 (red)	80 V supply > 88 V
H 8 (red)	80 V supply < 36 V
H 3 (green)	motor 3 ready
H 6 (red)	excess current motor 3
H 2 (green)	motor 2 ready
H 5 (red)	excess current motor 2
H 1 (green)	motor 1 ready
H 4 (red)	excess current motor 1

14.03 List of outputs and inputs

14.03.01 CAN-nodes 1

Output	Term	Function	Remark
OUT1	Y1.1	Loading table back	Impulse valve
OUT2	Y1.2	Loading table forwards	Impulse valve
OUT3	Y2	Suction on	Valve
OUT4	Y3	Needle bar down	Valve
OUT5	Y4	Needle bar down	Valvel
OUT6	Y5	Sewing foot up	Valvel
OUT7	Y6	Thread tension open	Valvel
OUT8	Y7	Thread trimming on	Valvel
OUT9	Y8	Air blast on	Valvel
OUT10	Y9	Air blast sewing foot	Valvel
OUT11			
OUT12	OUT1	Programmable output 1	
OUT13	OUT2	Programmable output 2	
OUT14			
OUT15			
OUT16			

Input	Term	Function
IN1	IN1	Programmable input **1**
IN2	IN2	Programmable input **2**
IN3	E1.1	Loading table at back
IN4	E1.2	Loading table at front
IN5	E1.3	Loading table in the middle (pushed back)
IN6	E5	Sewing foot raised
IN7	SMXNULL	Zero position SMX
IN8	SMYNULL	Zero position SMY
IN9	SMTNULL	Zero position SM material take-over (depth)
IN10	THERR	Needle thread error
IN11	FKEY	Code for secured functions
IN12	SMXLIMIT	Impermissible position for SMX
IN13	E10	Bobbin flap closed
IN14		
IN15	START KEY	Start key
IN16		

14.03.02 Special outputs

Term	Funktion	Remark
S1	Loading table unpressurized	
S2	Loading table back slowly	
S3	Blast air function	

14.04 Boot key

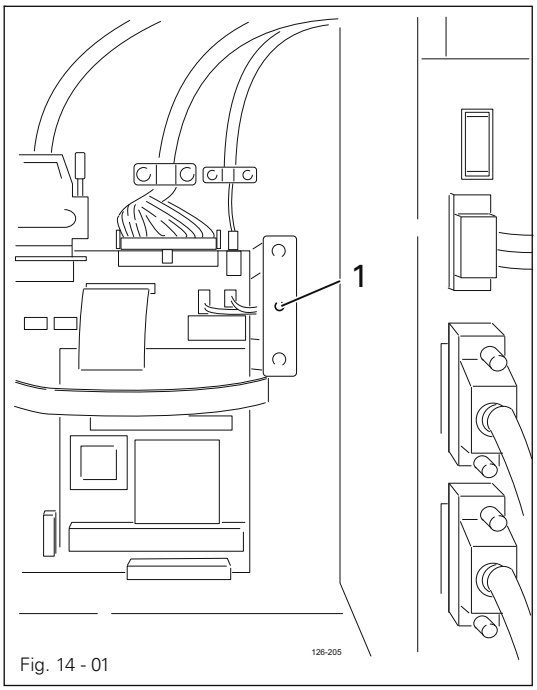

Fig. 14 - 01



This work may only be carried out by properly instructed personnel!
Do not touch any live parts!
Danger to life through electric voltage!

15 Pneumatics-switch diagram

15.01 PFAFF 3586-12/02

The control elements and valves are in the machine's basic position.Main switch -ON, compressed air -ON

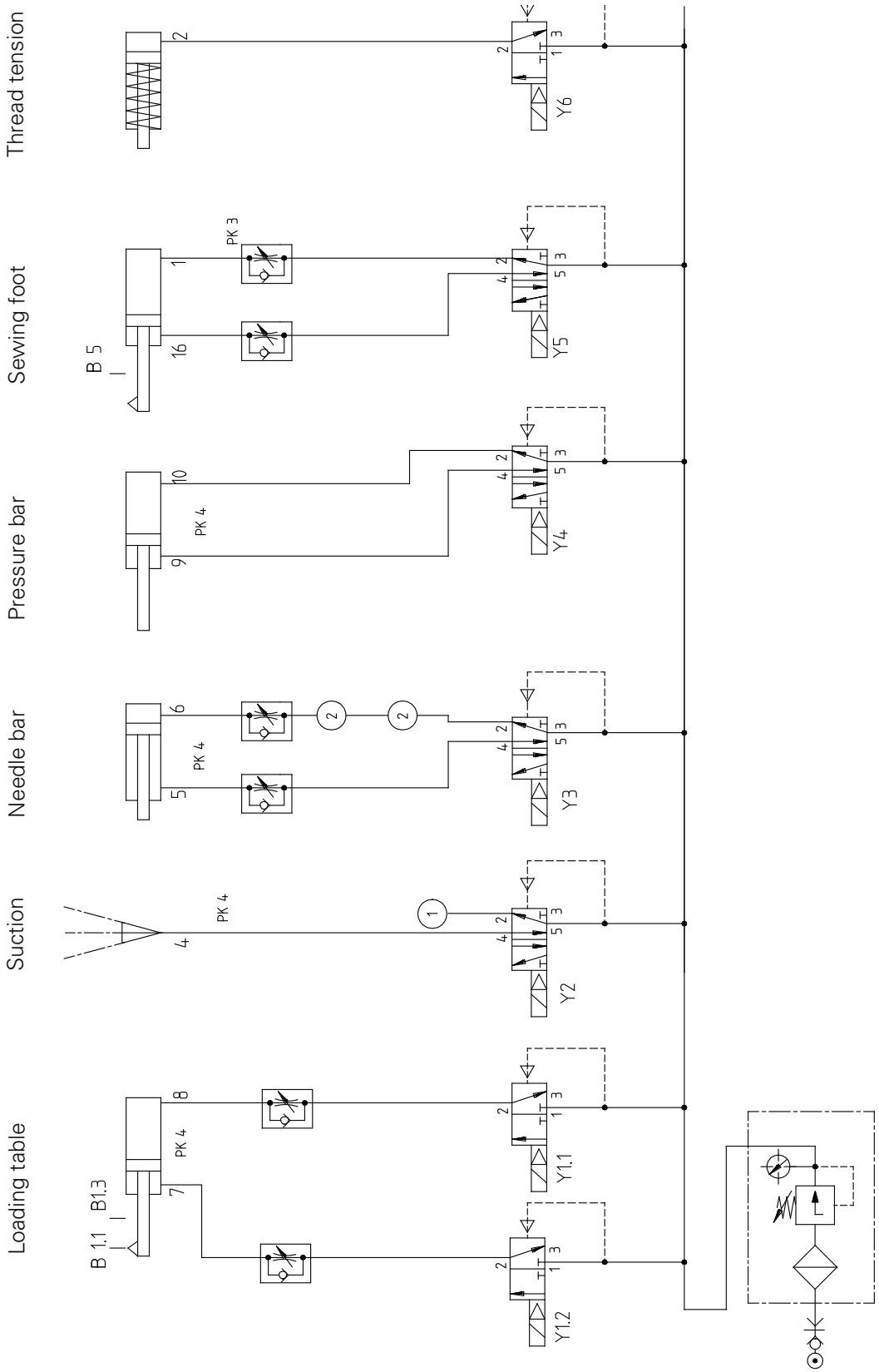

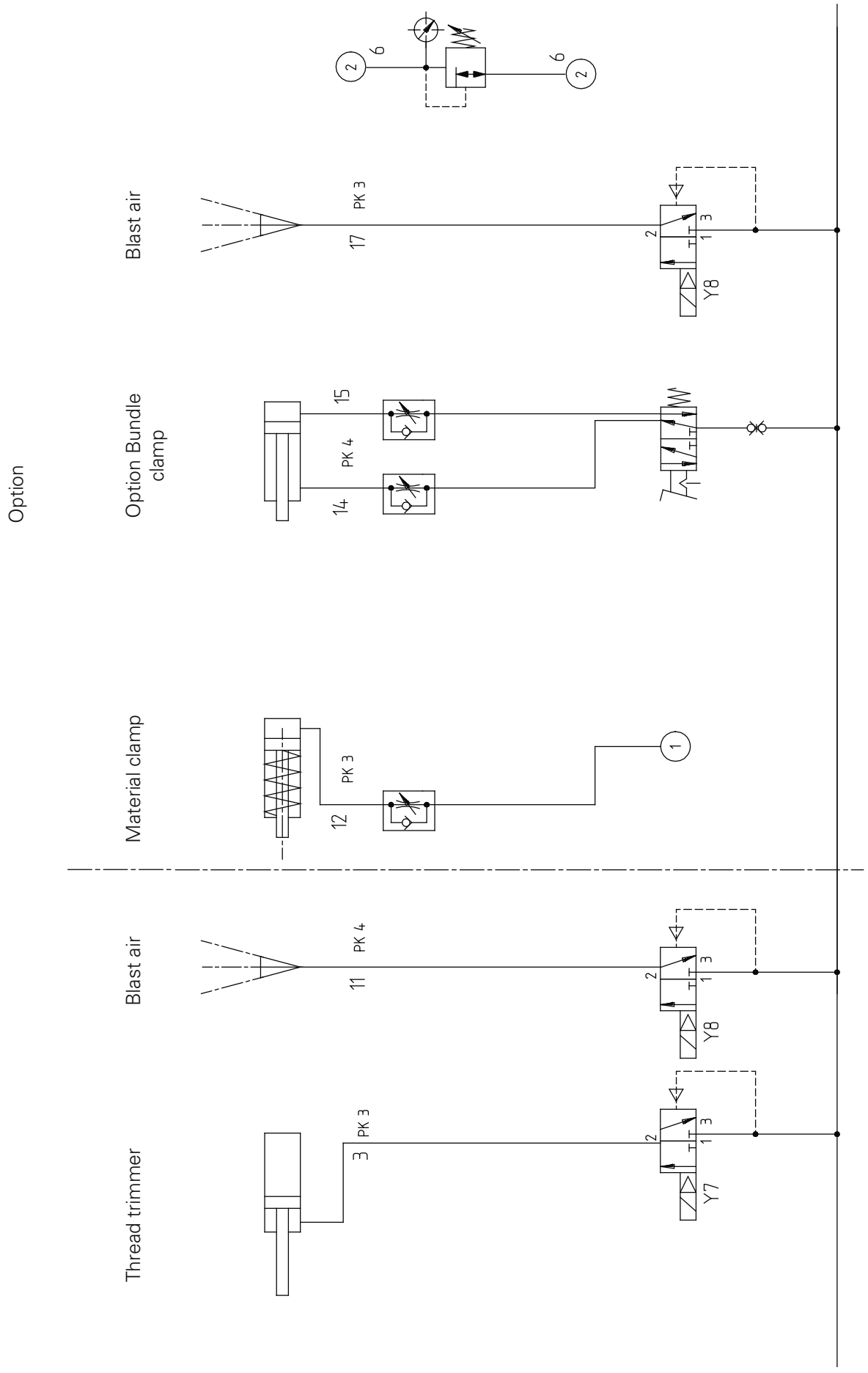
Option
Blast air
PK 3
17
Y8
Option Bundle clamp
15
PK 4
14
Material clamp
PK 3
12
Blast air
PK 4
11
Y8
Thread trimmer
PK 3
3
Y7
6
2
1
3

15.02 PFAFF 3586-13/01, -13/02

The control elements and valves are in the machine's basic position.Main switch -ON, compressed air -ON

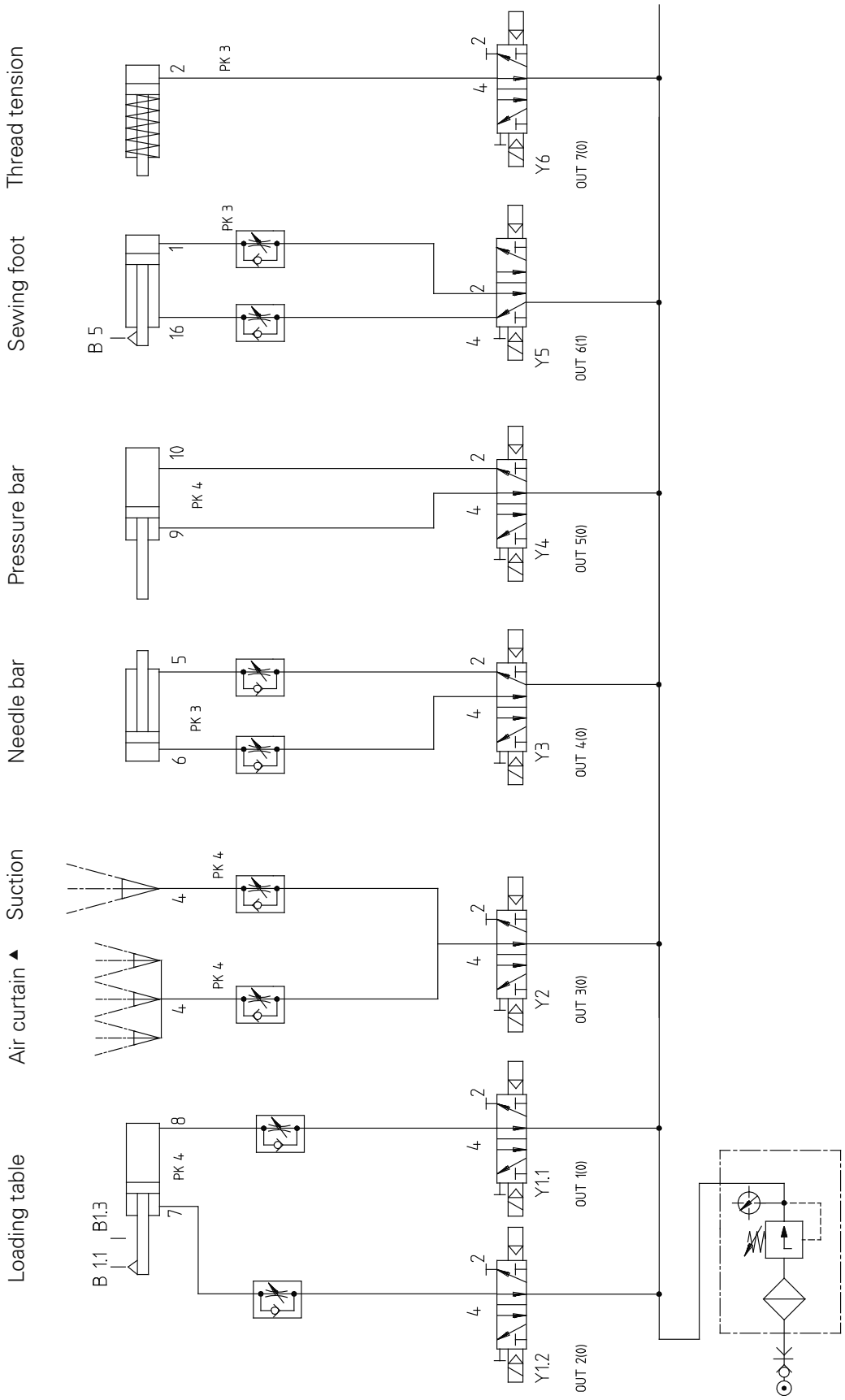

PFAFF Industrial

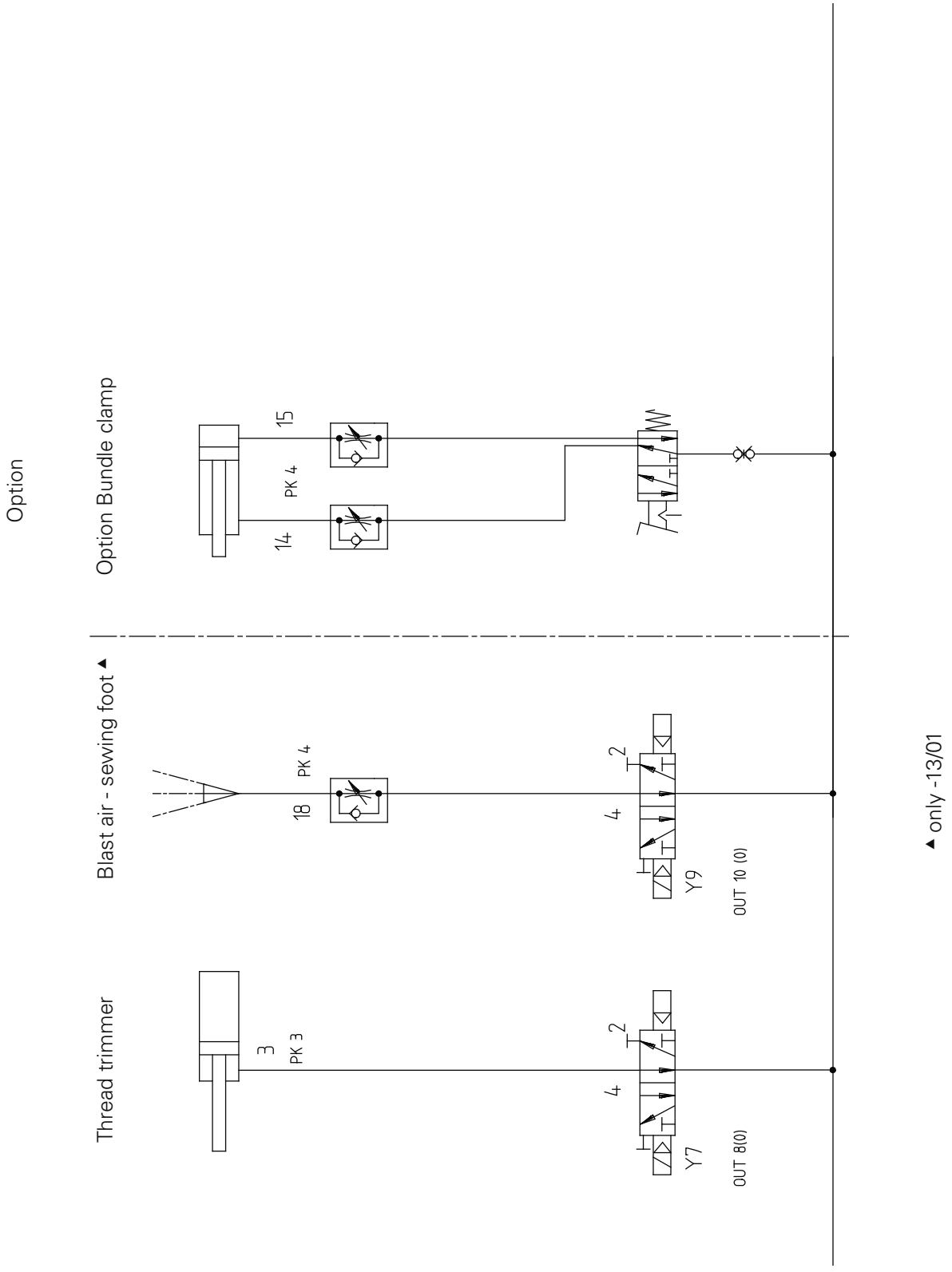
Option
Option Bundle clamp
15
PK 4
14
Blast air - sewing foot ◄
PK 4
18
2
4
Y9
OUT 10 (0)
Thread trimmer
3
PK 3
2
4
Y7
OUT 8(0)
◄ only -13/01

16 Circuit diagrams

Reference list for circuit diagrams

A10	CAN nodes
A20	Controller BS 3
A21	Printed circuit board
A22	Sewing motor control unit
A23	Board (FLOPPY STOP)
A24	Needle thread monitor, monitoring results
A25	Needle thread monitor, sensor (MSF02)
A26	Control panel BDF P1
A30	Power supply unit BS3
A40	Control unit SM-end phase
A50	Floppy LW HD
E1.1	Initiator –loading table at back
E1.2	Initiator –loading table at front
E1.3	Initiator –loading table in the middle
E5	Initiator – sewing foot raised
E10	Switch bobbin flap off
E11	Initiator – recognition device U-bar attached
F1, F2	Fuse 6.3x32 10AT
M1	Stepping motor X
M2	Stepping motor Y
M3	Stepping motor T
M4	Ministop sewing motor MS2 QE 3760
Q1	Main switch
SMXNULL	Initiator – zero position stepping motor X
SMYNULL	Initiator – zero position stepping motor y
SMTNULL	Initiator – zero position stepping material take-over
SMXLIMIT	Initiator – impermissible position for stepping motor X
T1	Transformer 230 V
Y1.1	Valve – loading table back
Y1.2	Valve – loading table forwards
Y2	Valve – suction on
Y3	Valve – needle bar down
Y4	Valve – pressure bar down
Y5	Valve – sewing foot up
Y6	Valve – thread tension on
Y7	Valve – thread trimming on
Y8	Valve – air blast on
Y9	Valve – air blast sewing foot on
Z1	Interference filter (10 VSK 1)

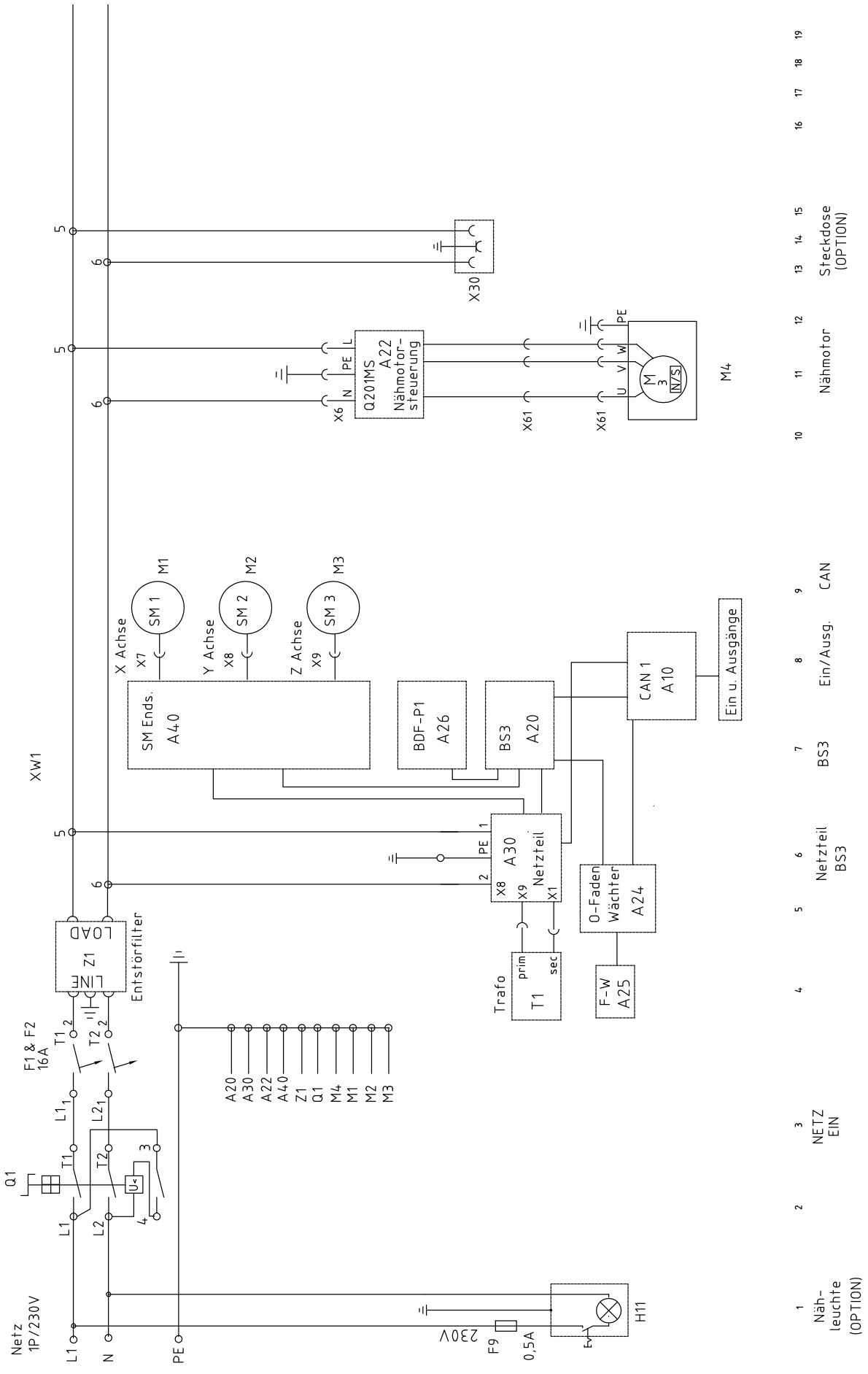
Netz
1P/230V
L1
N
PE
230V
F9
0,5A
H11
Q1
F1 & F2
16A
T1
T2
L1
L2
LINE
Z1
LOAD
Entstörfilter
XW1
A20
A30
A22
A40
Z1
Q1
M4
M1
M2
M3
Trafo
T1
prim
sec
A30
Netzteil
X8
X9
X1
PE
SM Ends.
A40
X Achse
X7
Y Achse
X8
Z Achse
X9
SM 1
SM 2
SM 3
M1
M2
M3
BDF-P1
A26
BS3
A20
CAN 1
A10
Ein u. Ausgänge
O-Faden
Wächter
A24
F-W
A25
Q201MS
A22
Nähmotor-
steuerung
X6
X61
X61
M4
X30
Nähmotor
Steckdose
(OPTION)
Ein/Ausg.
CAN
BS3
Netzteil
BS3
NETZ
EIN
Näh-
leuchte
(OPTION)

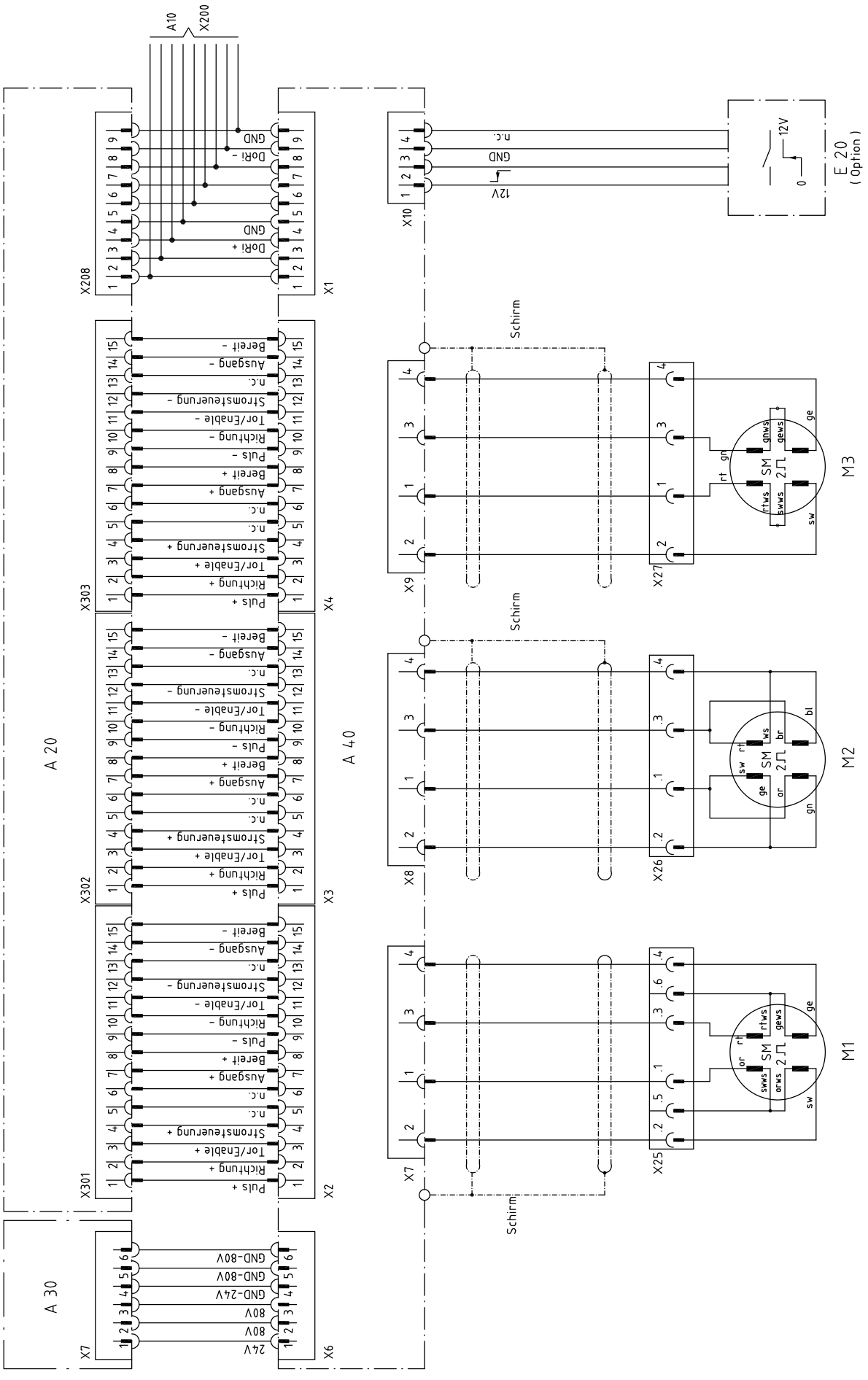
A 20
A 30
A 40
A10
X200
X208
X1
X303
X4
X302
X3
X301
X2
X7
X6
X10
X9
X8
X7
X27
X26
X25
Schirm
M3
M2
M1
E 20
(Option)
12V
GND
n.c.
DoRI +
DoRI -
Puls +
Puls -
Richtung +
Richtung -
Tor/Enable +
Tor/Enable -
Stromsteuerung +
Stromsteuerung -
Ausgang +
Ausgang -
Bereit +
Bereit -
24V
80V
GND-24V
GND-80V

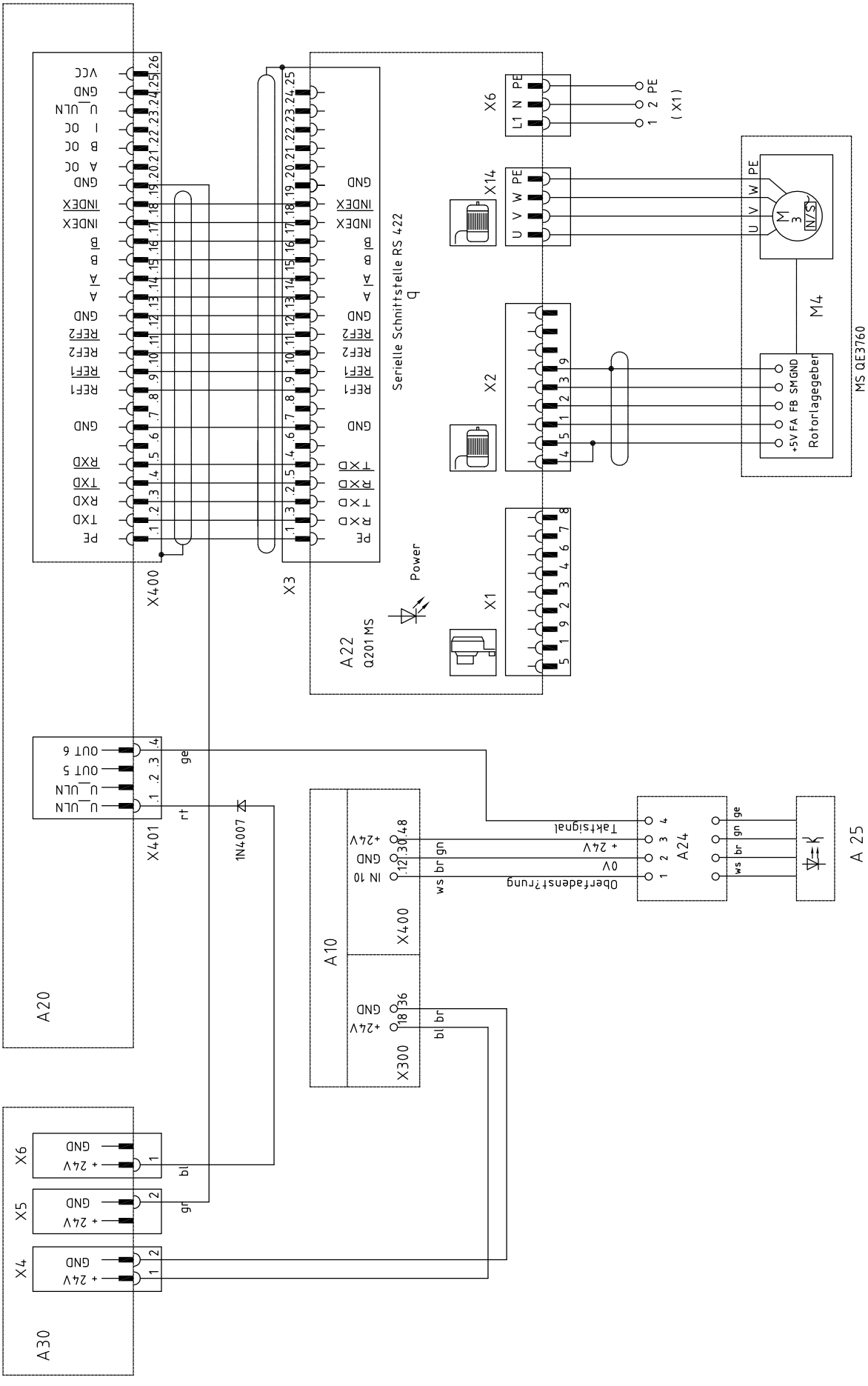
A20
X400
X401
X3
A22
Q201 MS
Serielle Schnittstelle RS 422
Power
X1
X2
X14
X6
(X1)
M4
MS QE3760
Rotorlagegeber
+5V FA FB SM GND
A10
X400
X300
A24
A 25
Taktsignal
Oberfadenst?rung
1N4007
A30
X4
X5
X6

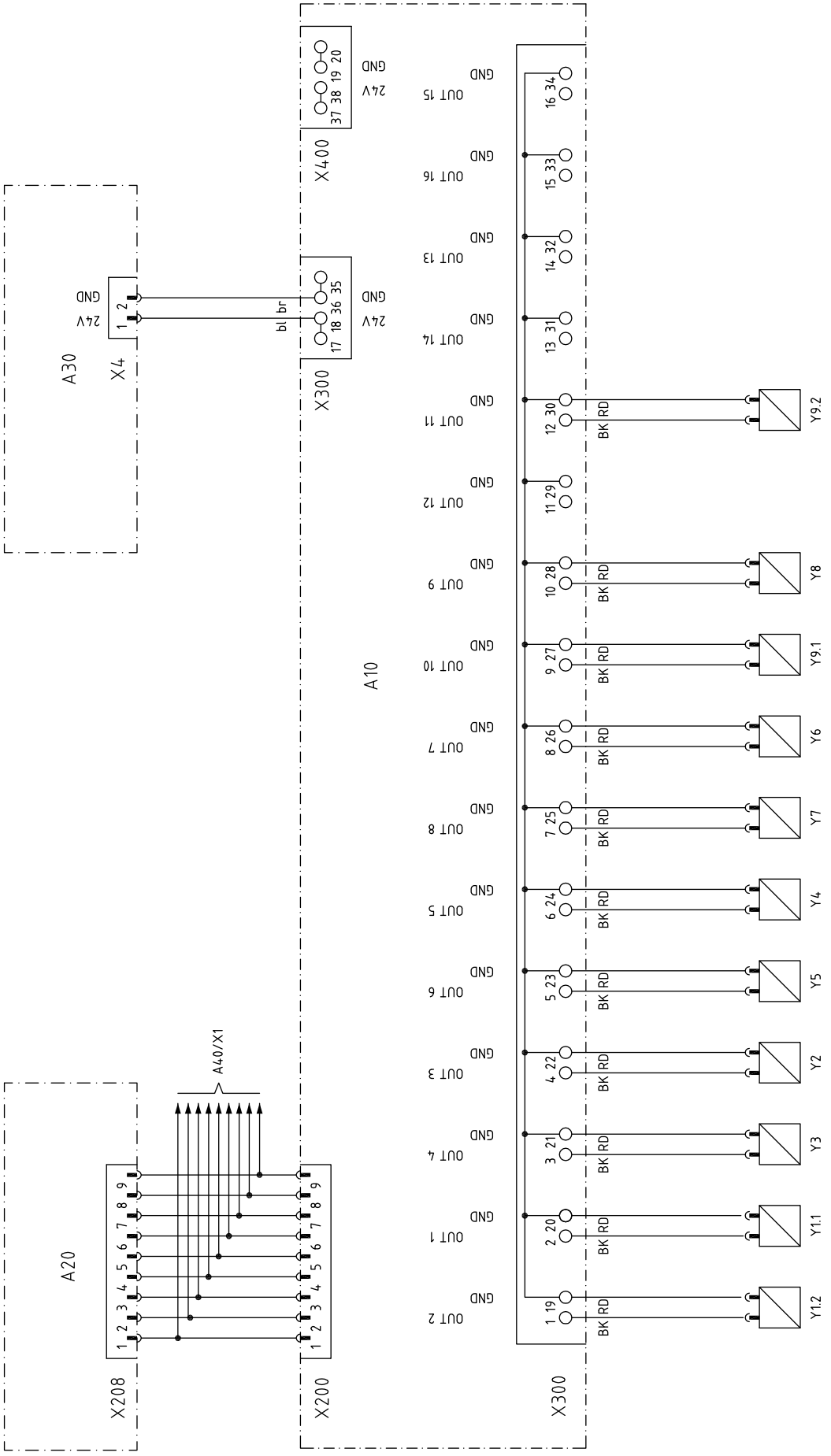
A30
X4
24V
GND
X400
X300
A10
A20
X208
X200
A40/X1
OUT 1
OUT 2
OUT 3
OUT 4
OUT 5
OUT 6
OUT 7
OUT 8
OUT 9
OUT 10
OUT 11
OUT 12
OUT 13
OUT 14
OUT 15
OUT 16
BK
RD
Y1.2
Y1.1
Y3
Y2
Y5
Y4
Y7
Y6
Y9.1
Y8
Y9.2

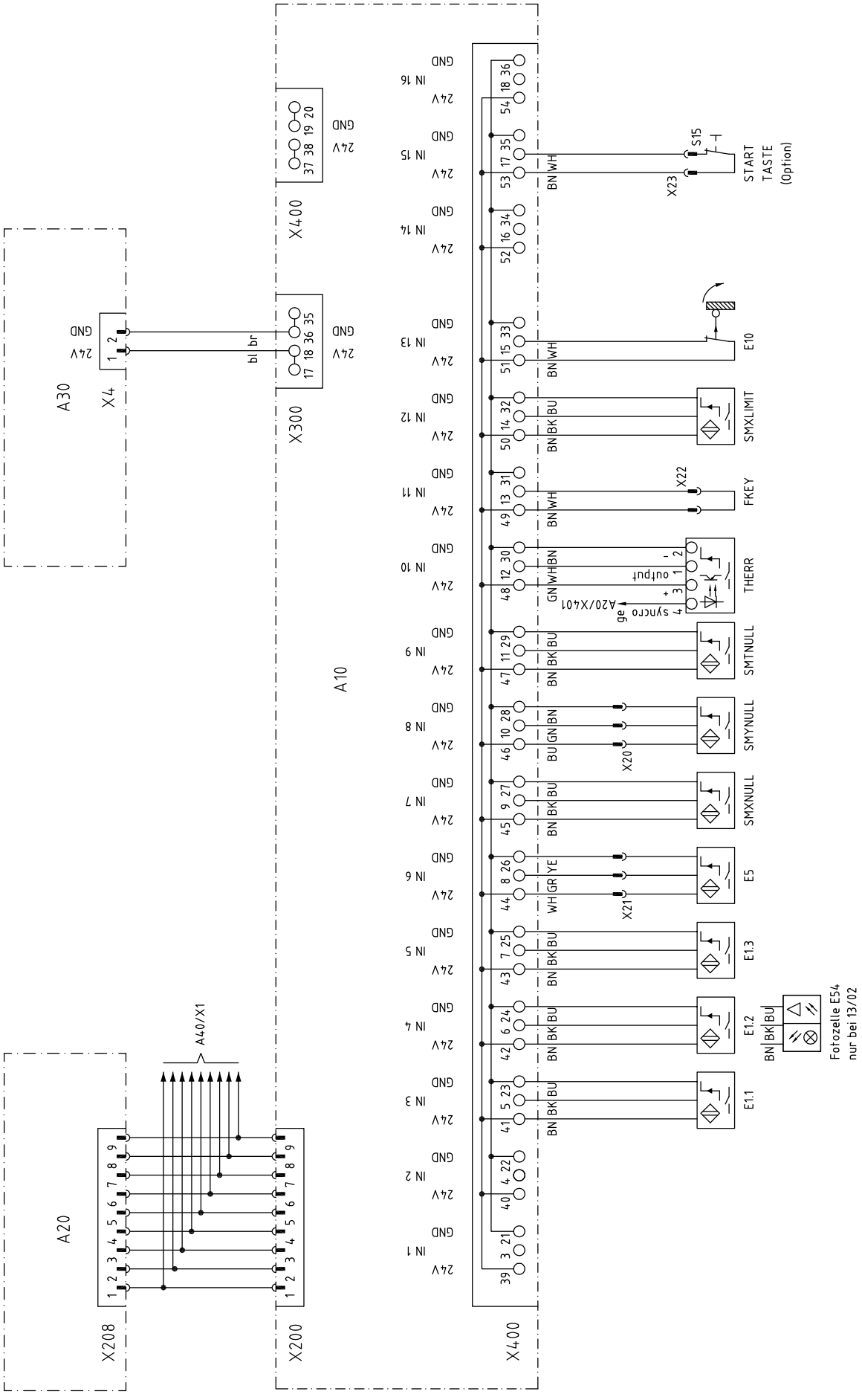
A10
A20
A30
X4
X200
X208
X300
X400
A40/X1
START
TASTE
(Option)
S15
X23
E10
SMXLIMIT
FKEY
X22
THERR
A20/X401
syncro
output
SMTNULL
SMYNULL
X20
SMXNULL
E5
X21
E1.3
E1.2
E1.1
Fotozelle E54
nur bei 13/02

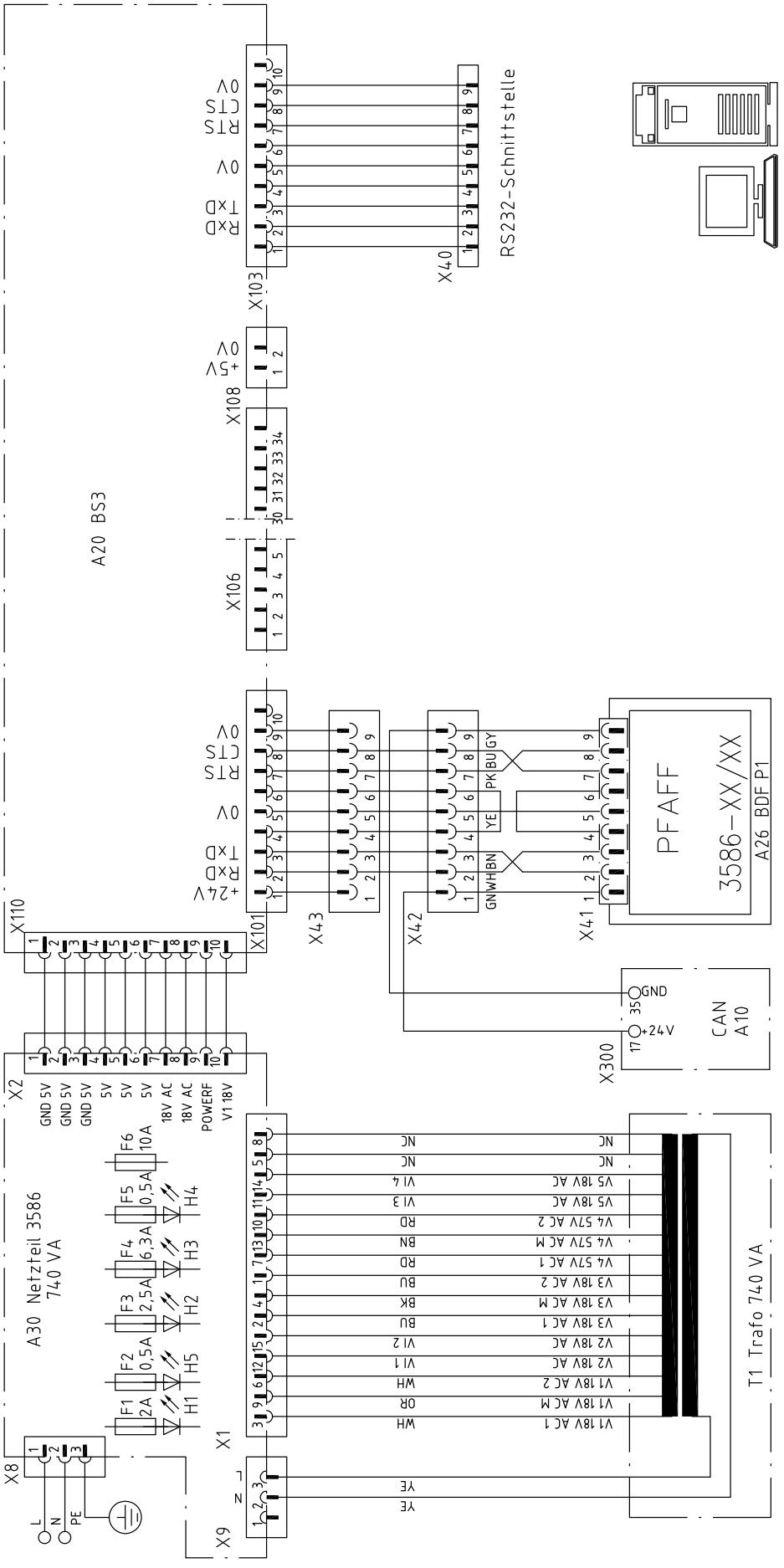
A20 BS3
X103
X40
RS232-Schnittstelle
X108
X106
X110
X101
X43
X42
X41
PFAFF
3586-XX/XX
A26 BDF P1
X300
GND
+24V
CAN
A10
X2
GND 5V
GND 5V
GND 5V
5V
5V
5V
18V AC
18V AC
POWERF
V1 18V
A30 Netzteil 3586
740 VA
F1 2A
F2 0,5A
F3 2,5A
F4 6,3A
F5 0,5A
F6 10A
H1
H2
H3
H4
H5
X8
X1
X9
L
N
PE
T1 Trafo 740 VA

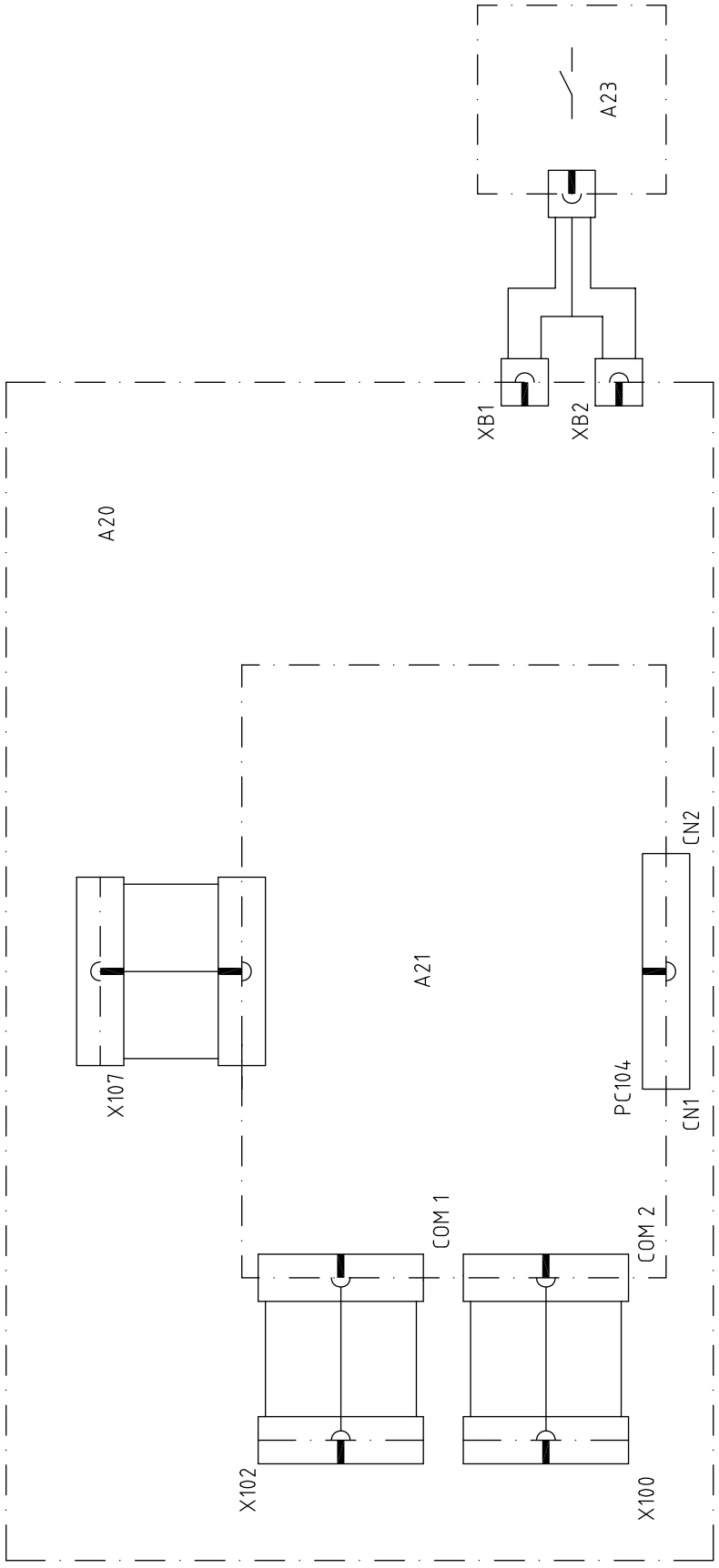
A23
XB1
XB2
A20
A21
X107
CN2
PC104
CN1
COM 1
COM 2
X102
X100

PFAFF® Industrial



Europäische Union
Wachstum durch Innovation – EFRE



PFAFF Industriesysteme
und Maschinen AG

Hans-Geiger-Str. 12 - IG Nord
D-67661 Kaiserslautern

Phone: +49-6301 3205 - 0
Fax: +49-6301 3205 1386
E-mail: info@pfaff-industrial.com

Hotlines:

Technical service:	+49-175/2243-101
Application consultance:	+49-175/2243-102
Spare-parts hotline:	+49-175/2243-103

Printed in Germany

© PFAFF Industriesysteme und Maschinen AG 2009, PFAFF is the exclusive trademark of VSM Group AB.PFAFF Industriesysteme und Maschinen AG is an authorized licensee of the PFAFF trademark.