PFAFF® Industrial

3587-12/01

INSTRUCTION MANUAL

This instruction manual applies to machines from the following serial numbers **2 794 316** and software version **0379/016** onwards:

296-12-19 093/002
Betriebsanleitung engl. 08.12



This Instruction Manual is valid for all models and subclasses listed in the chapter "Specifications ".

The reprinting, copying or translation of PFAFF Instruction Manuals, whether in whole or in part, is only permitted with our previous authorization and with written reference to the source.

PFAFF Industriesysteme
und Maschinen AG

Hans-Geiger-Str. 12 - IG Nord
D-67661 Kaiserslautern

Contents .....Page

Register 01

1 **Safety 7**
1.01 Directives 7
1.02 General notes on safety 7
1.03 Safety symbols 8
1.04 Important notes for the user 8
1.05 Notes for operating and technical staff 9
1.05.01 Operating staff 9
1.05.02 Technical staff 9
1.06 Danger warnings 10

Register 02

2 **Proper use 11**
3 **Specifications 12**
4 **Disposal of Machine 13**
5 **Transportation, packing and storage 14**
5.01 Transportation to customer's premises 14
5.02 Transportation inside the customer's premises 14
5.03 Disposal of packing materials 14
5.04 Storage 14
6 **Explanation of symbols 15**

Register 03

7 **Controls 17**
7.01 On/off switch 17
7.02 Foot switch 17
7.03 Stop/start button (optional) 18
7.04 Handwheel 19
7.05 Key-switch for adjusting the table height (option) 19
7.06 Control panel 20

Register 04

8 **Mounting and commissioning the machine 21**
8.01 Mounting 21
8.02 Removing the transit support bracket 22
8.03 Mounting the spool holder 22
8.04 Commisioning 23
8.05 Switching the machine on/off 24
8.06 PC interface 25
8.07 Selecting the language and units 25
8.08 Adjusting the control panel 26
8.09 Check/adjust zero points 27

Contents ..... Page

Register 05

9	**Preparation**	**31**
9.01	Inserting the needle	31
9.02	Winding the bobbin thread, adjusting the thread tension	32
9.03	Changing the bobbin / adjusting the bobbin thread tension	33
9.04	Threading the needle / adjusting the needle thread tension	34
9.05	Selecting the program number	35
9.06	Selecting / configuring a sequence	36
9.06.01	Selecting a sequence	36
9.06.02	Configuring a sequence	37
9.07	Selecting / combining linked programs	38
9.07.01	Selecting linked programs	38
9.07.02	Combining linked programs	39
9.08	Automatic program selection	40
9.08.01	Calling up the automatic program selection function	40
9.08.02	Determining a clamp code	41
9.08.03	Determining a program number	42
9.09	Setting the bobbin thread stitch counter	43

Register 06

10	**Sewing**	**45**
10.01	Sewing without clamp feeder	45
10.02	Sewing with clamp feeder	48
10.03	Sewing with sequences	50
10.04	Sewing with linked programs	52
10.05	Sewing with automatic program selection	54
10.06	Program interruption	56
10.07	Error messages	57
11	**Input**	**58**
11.01	Overview of the functions in the input mode	58
11.02	Creating / altering seam programs	60
11.02.01	Block functions	62
11.02.02	Image functions	64
11.02.03	Inserting functions	66
11.02.04	Other functions	68
11.03	An example for programming a seam	70
11.04	Program management	77
11.04	Rights of access	79

Register 07

12	**Care and maintenance**	**83**
12.01	Maintenance intervals	83
12.02	Cleaning the machine	84
12.03	Cleaning the hook	85

Contents ..... Page

12.04 Clean fan air filter 85
12.05 Checking/adjusting the air pressure 86
12.06 Cleaning the air filter of the air-filter/lubricator 86
12.07 Checking the oil level of the sewing head lubrication 87
12.08 Lubricate presser foot drive eccentric 87
12.09 Lubricate clamp guide 88

13 Adjustment 89
13.01 Notes on adjustment 89
13.02 Tools, gauges and other accessories 89
13.03 Abbreviations 89
13.04 Tilting the sewing head 90
13.05 Adjusting the sewing head 91
13.05.01 Spacing between sewing head and bed plate 91
13.05.02 Position of the sewing head in relation to the bed plate 92
13.05.03 Upper and lower toothed belt guards 93
13.05.04 Counterweight 94
13.05.05 Preadjusting the needle height 95
13.05.06 Centering the needle in the needle hole 96
13.05.07 Needle rise, needle height, hook clearance and needle guard 97
13.05.08 Bobbin-case opener stroke 99
13.05.09 Counter presser lifting stroke 100
13.05.10 Counter presser height 101
13.05.11 Counter presser position 102
13.05.12 Resting position of the roller lever / radial position of the control cam 103
13.05.13 Thread catcher height 104
13.05.14 Thread catcher position and knife height 105
13.05.15 Knife pressure 106
13.05.16 Bobbin thread clamp spring 107
13.05.17 Manual cutting test 108
13.05.18 Presser foot stroke position 109
13.05.19 Presser foot lifting stroke 110
13.05.20 Adjust presser foot to material thickness 111
13.05.21 Presser foot height 112
13.05.22 Adjustment of the presser foot level 113
13.05.23 Bobbin winder 114
13.05.24 Needle thread tension release 115
13.05.25 Thread check spring and slack thread regulator 116
13.05.26 Sewing head lifting cylinder 117
13.05.27 Bobbin thread slide 118
13.05.28 Hook lubrication 119
13.06 Adjusting the clamp drive and clamp feeder 121
13.06.01 Monitoring the clamp drive 121
13.06.02 Aligning the clamp drive 122
13.06.03 Hand-over position of the clamp feeder at the loading station 123

Contents ..... Page

13.06.04 Hand over position of the transport pins 124
13.06.05 Adjusting the belt tensions 125
13.06.06 Clamp drive reference points 126
13.07 Service menu 128
13.07.01 Cold start 129
13.07.02 Loading / updating the operating program 130
13.08 Sewing motor adjustments 131
13.09 Parameter settings 132
13.09.01 Selecting and altering parameters. 132
13.09.02 List of parameters 133
13.09.03 Carriage start (NIS) 135

Register 08

14 Control 137
14.01 Basic setting / Diagnosis / Pin assignment 137
14.01.01 Basic control unit A20 137
14.01.02 Sewing drive A22 139
14.01.03 Stepping motor drive A21 141
14.01.04 Feed motor drive 142
14.01.05 AC-Line-Controller 142
14.02 Description of the error messages 143
14.02.01 General errors 143
14.02.02 CAN-errors 145
14.02.03 Stitch generation error 146
14.02.04 Sewing motor errors 147
14.02.05 Errors – Stepping motor drive 148
14.02.06 Error – Feeder motor drive 149
14.03 List of outputs and inputs 150
14.03.01 CAN-nodes 1 150
14.03.02 CAN-nodes 2 151
14.03.03 CAN-nodes 3 152
14.03.04 Special outputs 153
14.04 Boot key 153

15 Pneumatics-switch diagram 154

16 Circuit diagrams 159

1 Safety

1.01 Directives

The machine has been constructed in accordance with the requirements listed in the EC Declaration of Conformity and the Declaration of Incorporation.
In addition to this Instruction Manual, also observe all generally accepted, statutory and other regulations and legal requirements - also those of the country in which the machine will be operated - and all valid environmental protection regulations!
Applicable local regulations of the social insurance society for occupational accidents or other supervisory organizations are to be strictly adhered to!

1.02 General notes on safety

- This machine must only be operated by adequately trained operators and only after having completely read and understood the Instruction Manual!
- All Notes on Safety and Instruction Manuals of the motor manufacturer are to be read before operating the machine!
- The Danger and Safety Instructions on the machine itself are to be followed!
- This machine must only be used for the purpose for which it is intended and must not be operated without its safety devices. All applicable safety regulations must be observed.
- When leaving the machine unattended and during maintenance work, the machine must be disconnected from the power supply by operating the main switch or by removing the plug from the mains!
- Daily maintenance work must only be carried out by appropriately trained personnel!
- When carrying out servicing or repair work on pneumatic devices, the machine must be disconnected from the pneumatic supply network! The only exceptions to this are adjustment work and functional tests carried out by appropriately trained personnel!
- Repair work and special maintenance work must only be carried out by specialists or appropriately trained personnel!
- Work on electrical equipment must only be carried out by appropriately trained specialist personnel!
- Work is not permitted on parts and equipment which are connected to the power supply! Exceptions to this are contained in the regulations EN 50110.
- Modifications and alterations to the machine must only be carried out pursuant to all relevant safety regulations!
- Only spare parts which have been approved by us are to be used for repairs! We expressly point out that any replacement parts or accessories not supplied by us have not been tested and approved by us. The installation and/or use of any such products may result in negative changes to the constructional characteristics of the machine. We are not liable for any damage which may be caused by non-original parts.

1.03 Safety symbols



Danger!
Special points to observe.



Danger of injury to operating or technical staff!



Caution

Do not operate without finger guard and safety devices.

Before threading, changing bobbin and needle, cleaning etc. **switch off main switch**.

1.04 Important notes for the user

- This instruction manual belongs to the equipment of the machine and must be available to the operating staff at all times.
- This instruction manual must be read before the machine is operated for the first time.
- Both operating and technical staff must be instructed on the safety devices of the machine and on safe working methods.
- It is the duty of the user to operate the machine in perfect running order only.
- The user must ensure that none of the safety devices are removed nor put out of working order.
- The user must ensure that only authorized persons operate and work on the machine.

For further information please refer to your PFAFF agency..

1.05 Notes for operating and technical staff

1.05.01 Operating staff

Operating staff are the persons responsible for setting up, operating and cleaning the machine and for eliminating any malfunctioning in the sewing area.

The operating staff is obliged to observe the following points:

- The notes on safety in this instruction manual must always be observed!
- Any working methods, which adversely affect the safety of the machine, must be avoided.!
- Loose-fitting clothing should be avoided. No jewellery, such as chains and rings, should be worn!
- Ensure that only authorised persons enter the danger area of the machine!
- Any changes occurring on the machine, which may affect its safety, must be reported to the user immediately.

1.05.02 Technical staff

Technical staff are persons who have been trained in electrical engineering/electronics and mechanical engineering. They are responsible for lubricating, servicing, repairing and adjusting the machine.

The technical staff is obliged to observe the following points:

- The notes on safety in this instruction manual must always be observed!
- Before carrying out any adjustment or repair work the main switch must be switched off and measures taken to prevent it from being switched on again!
- Never work on parts or equipment still connected to the power supply! Exceptions are only permissible in accordance with the regulations EN 50110.
- All safety covers must be replaced after the completion of maintenance or repair work!

1.06 Danger warnings

A working area of **1 m** must be kept free both in front of and behind the machine, so that easy access is possible at all times.

Never put your hands in the sewing area during sewing!
Danger of injury by the needle!

Never leave objects on the table while adjusting the machine settings! Objects can become trapped or be slung away! Danger of injury by hurled objects!

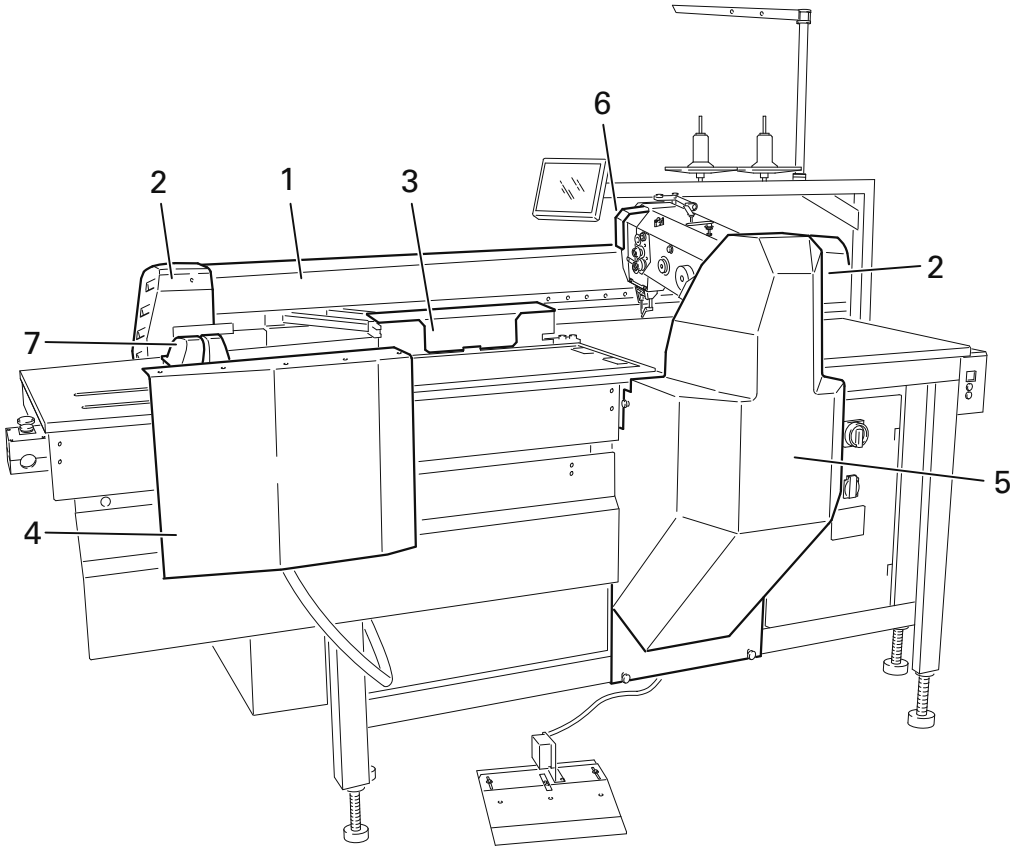

Fig. 1 - 01

Do not operate the machine without protective covers **1**, **2**, **3**, **4** and 5!
Danger of crushing between moving parts of the pneumatic or feed systems!

Do not operate the machine without take-up lever guard **6**!
Danger of injury by the movement of the take-up lever!

Do not place hands in the swivel range of the clamp interlock **7**!
Danger of crushing from high pressure forces!

Register 02

2 Proper use

The PFAFF 3587-12/01 is a large panel automatic sewing machine for sewing fancy and assembly seams in the shoe, leather, plastics and motor accessories industries.



Any and all uses of this machine which have not been approved of by the manufacturer are considered to be inappropriate! The manufacturer cannot be held liable for any damage caused by the inappropriate use of the machine! The appropriate use of the machine means that all operational, adjustment, maintenance and repair measures required by the manufacturer are to be observed!

3 Specifications▲

Sewing machine head:.....PFAFF automatic sewing head with vertical hook

Max. sewing speed:.....3200 s.p.m.
Max. stitch length: .....6 mm
Stitch type:.....301 (lockstitch)

Needle system:.....134-35 KK
Needle size ..... 80 – 160

Max. motor speed: .....3200 r.p.m.
Operating voltage: .....230 V ± 10%, 50/60 Hz, A/C
Power requirement: .....2.2 kW
Leakage current ..... ≤ 5 mA◆

Control range: .....500 x 300 mm
Storage capacity: ..... 5 000.000 stitches

Min. working pressure:.....6 bar
Air consumption:.....approx. 15l/cycle

Machine dimensions:
Length: (with automatic clamp change)..... approx. 2100 (2500) mm
Width: ..... approx. 1450 mm
Height: ..... approx. 1200 mm
Table height:..... 850 – 1150 mm

Ambient temperature
85% rel. humidity (condensation not permitted): ..... 5 – 40° C

Noise data
Emission sound pressure level at the workplace
at a sewing speed of 3200 spm ..... L_{pA} < 76 dB(A)■
(Noise measurement in acc. with DIN 45 635-48-A-1, ISO 11204, ISO 3744, ISO 4871)

▲ Subject to alteration

◆ Due to the use of network filters there is a nominal leakage current of ≤ 5 mA.

■ K_{pA} = 2,5 dB

4 Disposal of Machine

- Proper disposal of the machine is the responsibility of the customer.
- The materials used for the machine are steel, aluminium, brass and various plastic materials. The electrical equipment comprises plastic materials and copper.
- The machine is to be disposed of according to the locally valid pollution control regula-tions; if necessary, a specialist ist to be commissioned.



Care must be taken that parts soiled with lubricants are disposed of separately according to the locally valid pollution control regulations!

5 Transportation, packing and storage

5.01 Transportation to customer's premises

The machines are delivered completely packed.

5.02 Transportation inside the customer's premises

The manufacturer cannot be made liable for transportation inside the customer's premises nor to other operating locations. It must be ensured that the machines are only transported in an upright position.

5.03 Disposal of packing materials

The packing materials of this machine comprise paper, cardboard and VCE fibre. Proper disposal of the packing material is the responsibility of the customer.

5.04 Storage

If the machine is not in use, it can be stored as it is for a period of up to six months, but It should be protected against dust and moisture.
If the machine is stored for longer periods, the individual parts, especially the surfaces of moving parts, must be protected against corrosion, e.g. by a film of oil.

6 Explanation of symbols

In this instruction manual, work to be carried out or important information is accentuated by symbols. These symbols have the following meanings:



Note, information



Cleaning, care



Lubrication

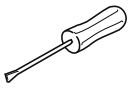

Maintenance, repairs, adjustment, service work
(only to be carried out by technical staff)

7 Controls

7.01 On/off switch

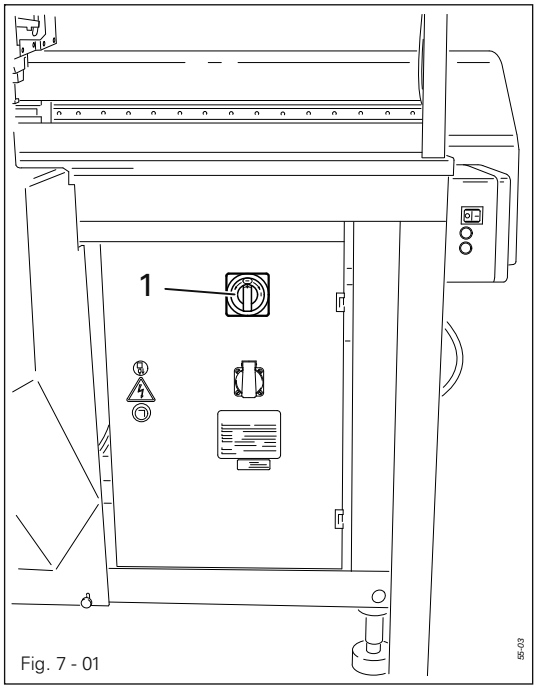

Fig. 7 - 01

- By turning on/off switch **1**, the power supply to the machine is switched on or off.

7.02 Foot switch

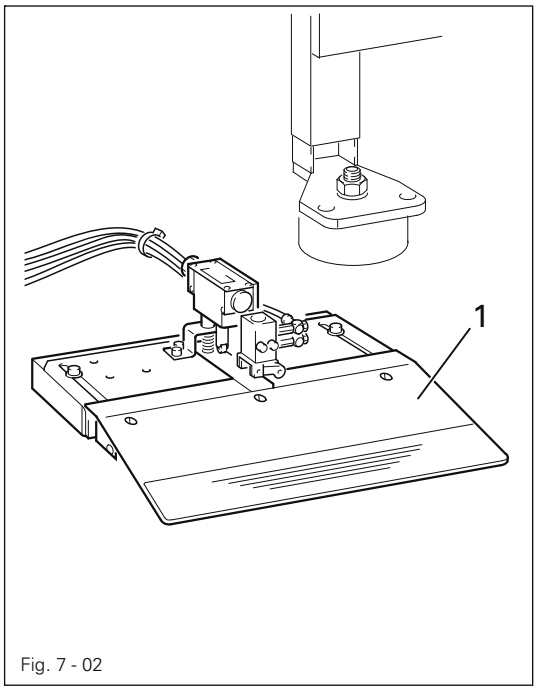

Fig. 7 - 02

- The foot switch can be operated in **2** positions and has the following functions, depending on how it is set.

FLIP-FLOP-mode on

Pos. **1**: Clamp is locked in clamp drive. When action is repeated, lock is released.

Pos. **2**: Work sequence is started.

FLIP-FLOP-mode off

Pos. **1**: Clamp is locked in clamp drive. Lock is released immediately after the foot switch is released.

Pos. **2**: Work sequence is started.

7.03 Stop/start button (optional)

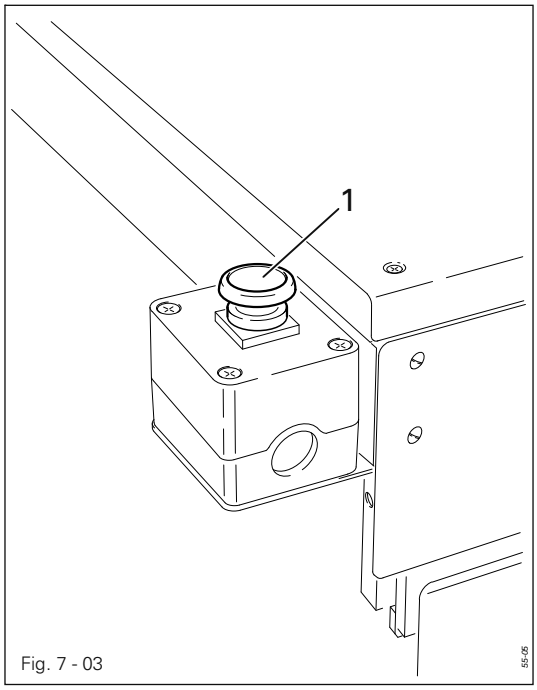

Fig. 7 - 03

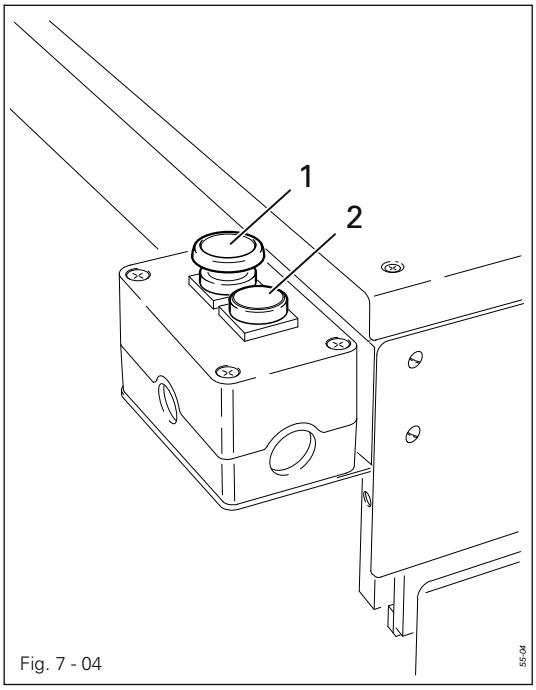

Fig. 7 - 04

- The complete program sequence is stopped by pressing stop button **1**.
- On machines with clamp feeder (Fig. **7.04**) the program sequence can be re-started by pressing button **2**.
- During the program sequence, a pre-start can be activated with button **2** as soon as the second clamp has been loaded. The clamp change is then carried out automatically immediately after the sewing cycle has finished.

7.04 Handwheel

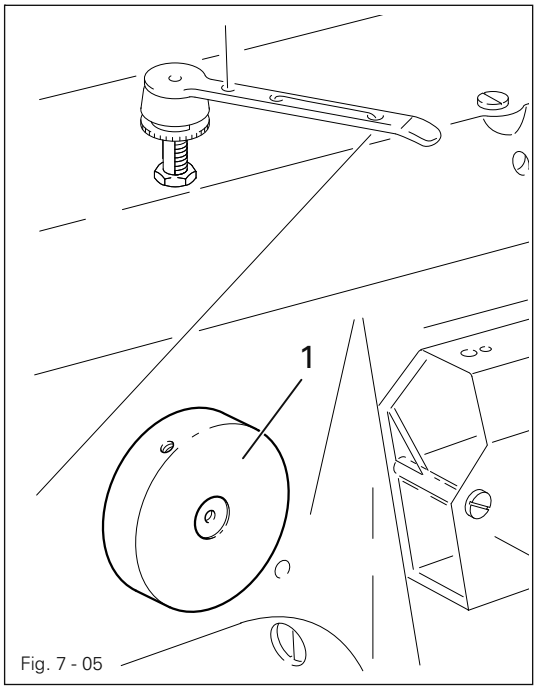

Fig. 7 - 05

- By turning and simultaneously pushing the handwheel **1** in, the needle bar can be positioned manually as required.

7.05 Key-switch for adjusting the table height (option)

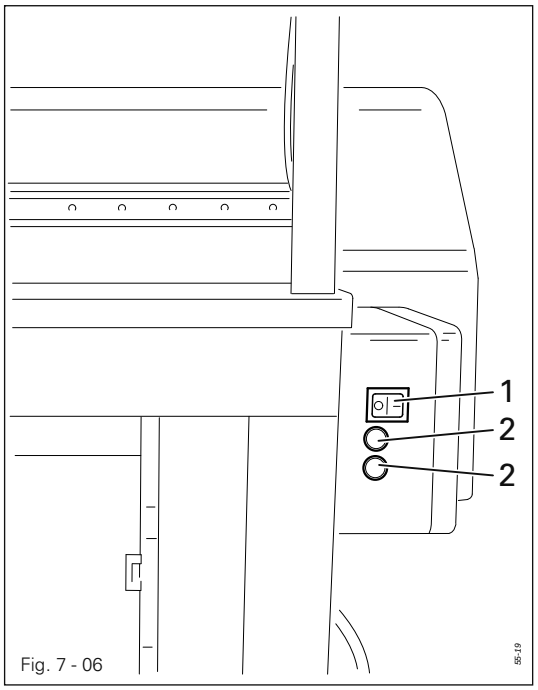

Fig. 7 - 06

- After the function has been switched on with the flip switch **1**, the table height can be adjusted between **850 – 1150 mm** with buttons **2**, when the machine is switched on.

7.06 Control panel

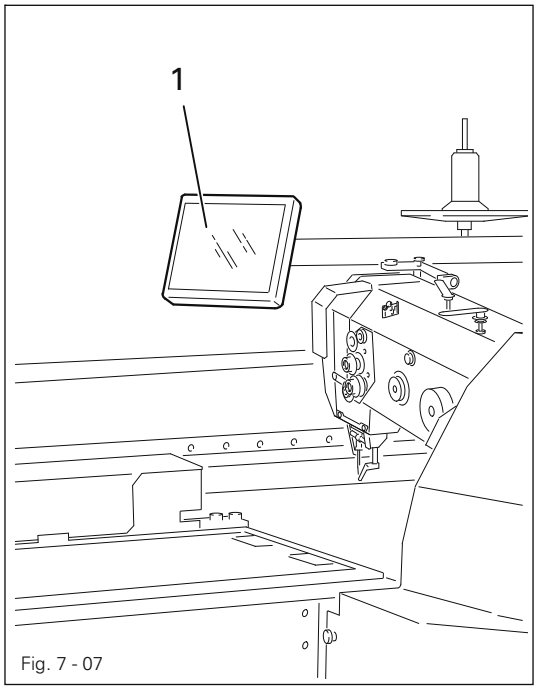

Fig. 7 - 07

The current operating conditions are displayed on control panel **1**. Operation takes place in a constant dialogue between the control unit and the operator. For this purpose, depending on the operating condition of the machine, different symbols and/or texts are displayed. If the symbols or texts are framed, these show functions which can be selected by pressing the appropriate position on the monitor. By pressing the corresponding function this is carried out or switched on or off immediately, or a further menu appears, e.g. for entering a value. Activated functions are shown with inverted symbols. Unframed symbols or texts are only used for display purposes and cannot be selected by pressing.

Description of the functions

Normal symbol = function switched off (inactive)

Inverted symbol = function switched on (active)

8 Mounting and commissioning the machine

After unpacking the machine, check it for any transport damage. In case of damage, inform the shipping company and the responsible PFAFF dealer.

The machine must only be mounted and commissioned by qualified personnel!
All relevant safety regulations are to be observed!

8.01 Mounting

At the machine's location, there must be a stable and horizontal surface as well as suitable electricity and compressed air supplies (see chapter **3** Specifications).

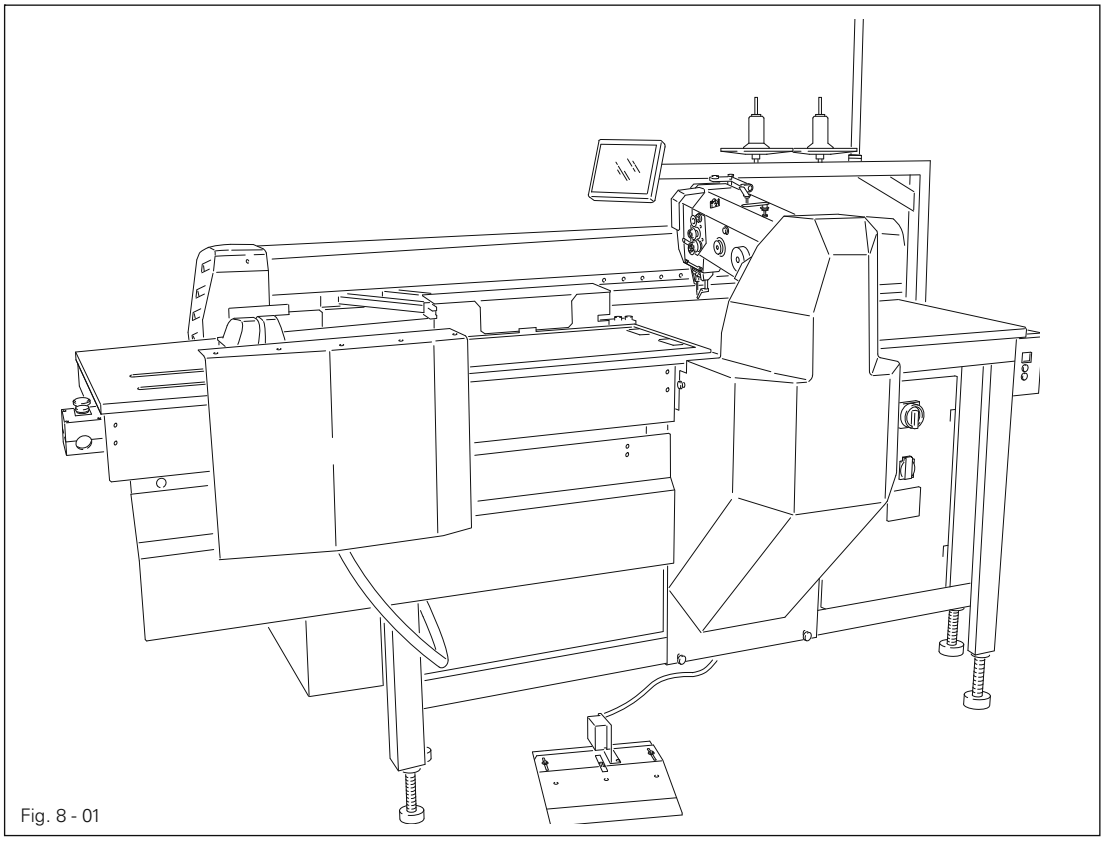

Fig. 8 - 01

- Lift the machine with a forklift from the shipping pallet.

For machines without vertical adjustment:

- Align the machine horizontally just above the floor and move the four legs accordingly before setting the machine down on the ground.

For machines with vertical adjustment:

- Set down the machine on the ground and align it by turning the four spindles.

The vertical adjustment is available as an optional feature.
Fig. **8-01** shows a machine with vertical adjustment.

8.02 Removing the transit support bracket

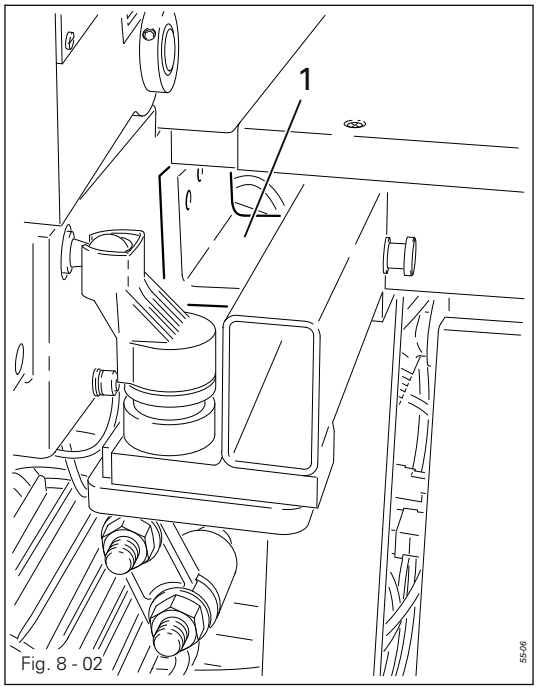

Fig. 8 - 02

Before the machine is commissioned, transit support bracket **1** must be removed!

Transit support bracket **1** serves to secure the sewing machine during transit and must not be used during sewing.

8.03 Mounting the spool holder

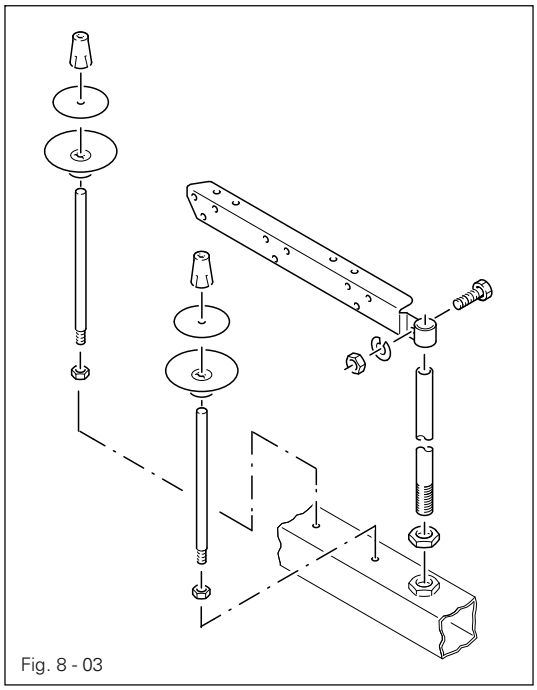
Fig. 8 - 03

- Mount the spool holder according to Fig. **8.03**.

8.04 Commisioning

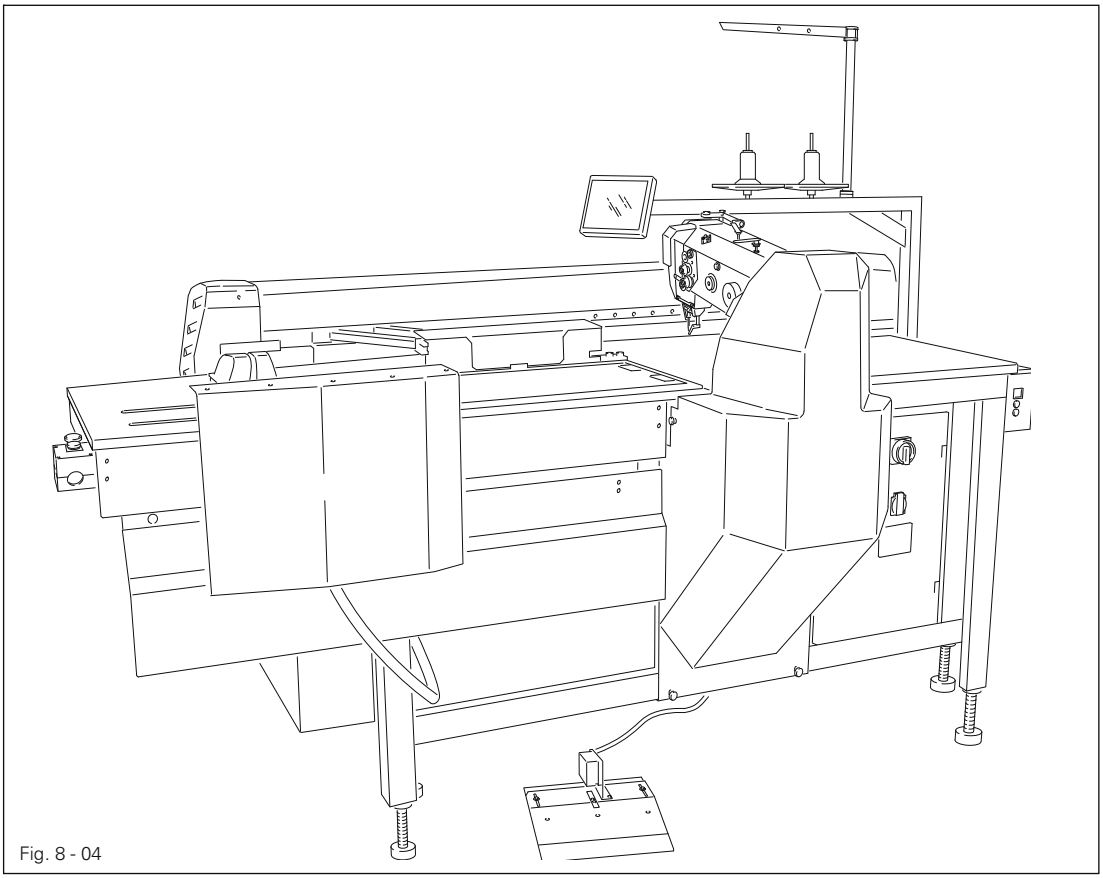

Fig. 8 - 04

- Before commissioning the machine, clean it thoroughly and lubricate it, or pour in oil, see Chapter **12 Care and Maintenance**!
- The machine, in particular the electric wires and pneumatic connection tubes, must be examined for any damage.
- Have skilled personnel check if the machine can be operated with the available mains voltage.



Do not operate the machine if there is any discrepancy.



The machine may only be connected to an earthed socket!

- Connect machine to the compressed air system.
  The manometer on the air filter/lubricator unit must display a pressure of **6** bar.
  If necessary, set to the correct value (see chapter **12.05 Checking / regulating air compression**).

8.05 Switching the machine on/off

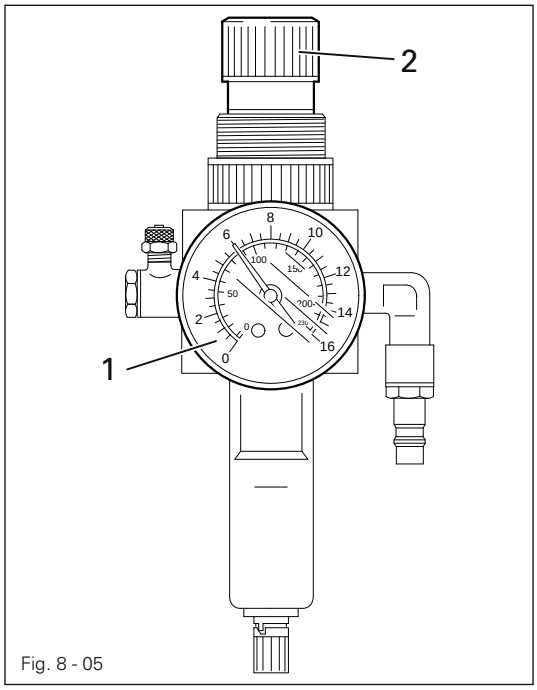

Fig. 8 - 05

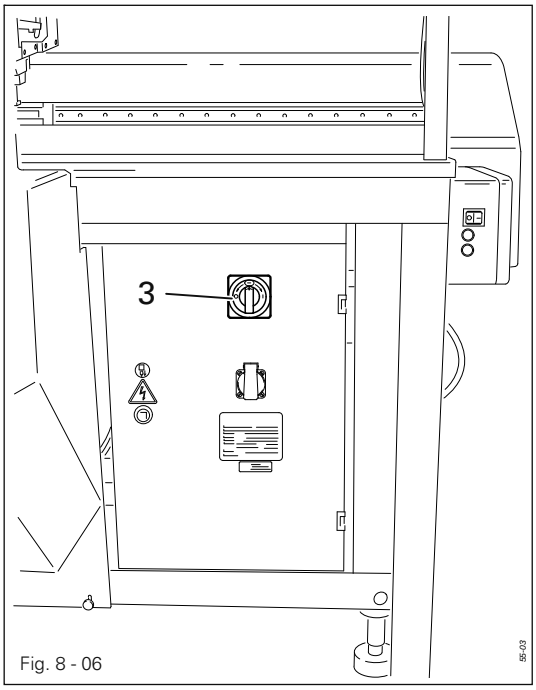

Fig. 8 - 06

- Check air pressure on pressure gauge **1** and, if necessary, adjust air pressure with adjusting knob **2**.
- Turn main switch **3** to position "I".

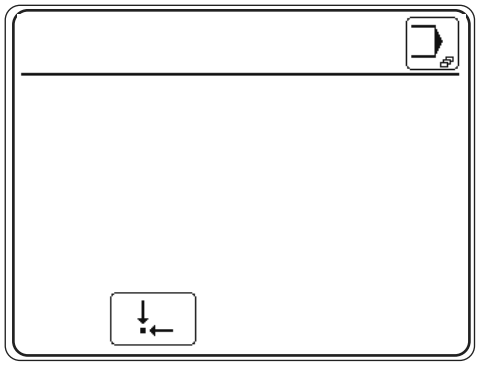

- After booting the machine control unit, to start the machine, move it back to its basic position.
- Carry out a test run, see Chapter **10 Sewing.**

When commissioning the machine, the zero points must be checked or adjusted (see Chapter **8.09 Checking / adjusting the zero points**).

- To switch off the machine, turn main switch **3** to position "**0**".

Description of other functions on the display

Input menu
This function is used to call up the input mode, see Chapter **11 Input**.

8.06 PC interface

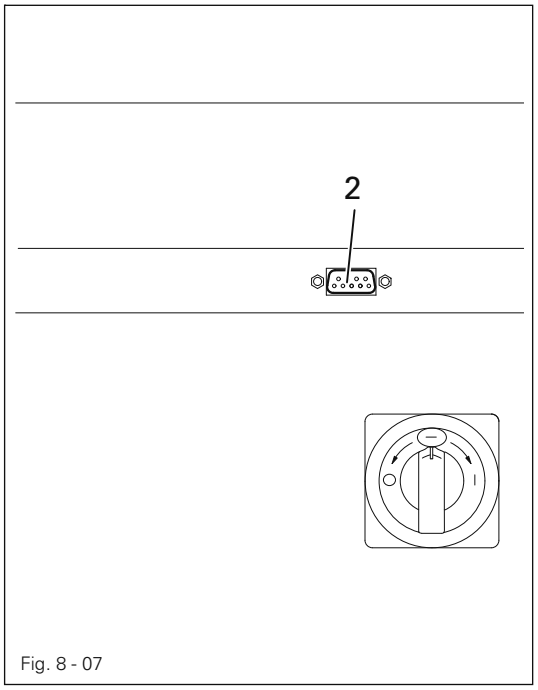

Fig. 8 - 07

- To read sewing programs or install machine software, use the sd-card-slot in the control panel.
- Socket **2** is for connecting the programming system OSCA.

With OSCA existing CAD data records can be used to generate seam programs.

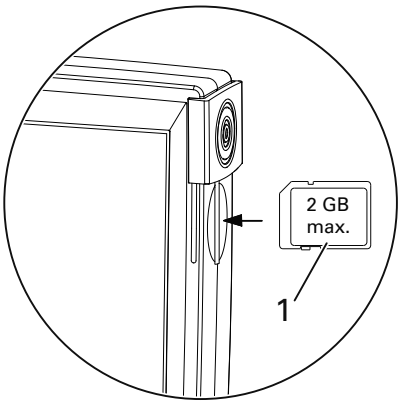

8.07 Selecting the language and units

- Switch on the machine.
- Call up the input menu.

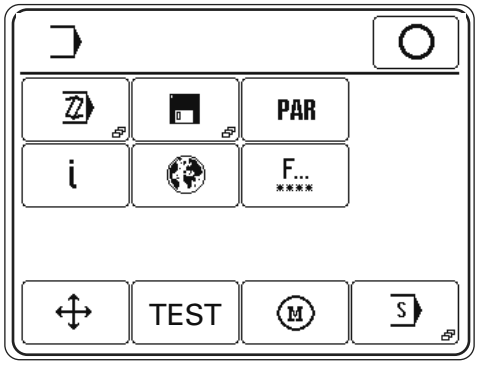

- Call up the settings menu.

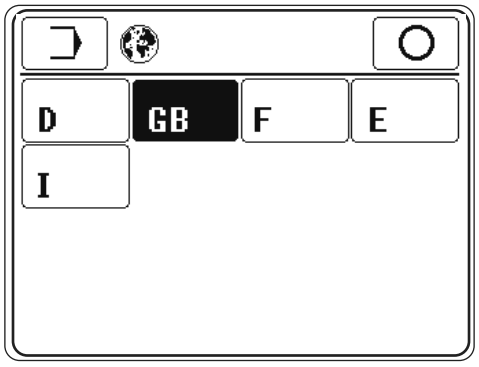

- Select the appropriate language.

8.08 Adjusting the control panel

- Switch on the machine.



- Call up the input mode.

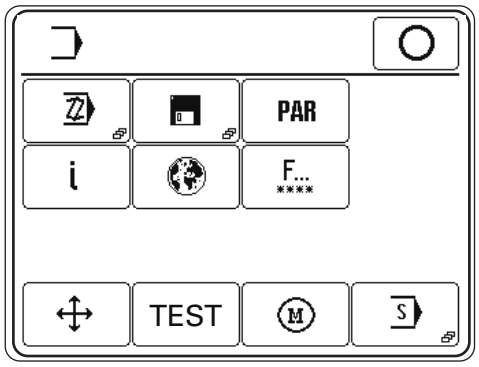

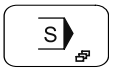

- Select the service menu.

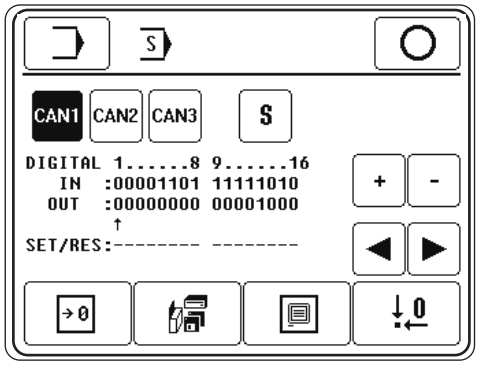



- Select control panel functions.

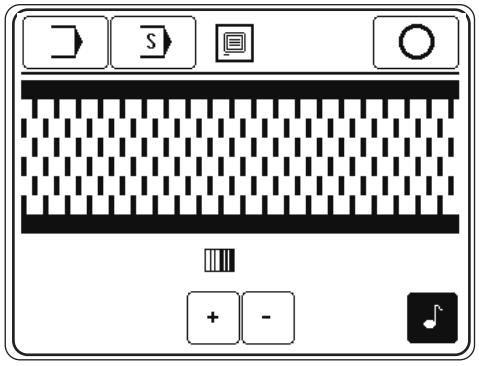

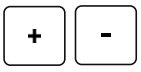

- Change the display contrast.



- Switch the key tone off or on.



Never reduce the display contrast to the extent, that the display can no longer be read!



- Conclude the input.

8.09 Check/adjust zero points

Before commissioning the machine, or after changing the controller or one of the initiators of the clamp drive, it is necessary to set the zero points.

On machines with clamp feeder (optional), this must be switched off when checking the zero points.

- Call up the input mode.

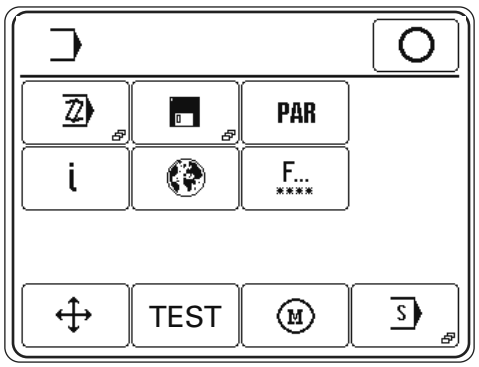

- Select the service menu.

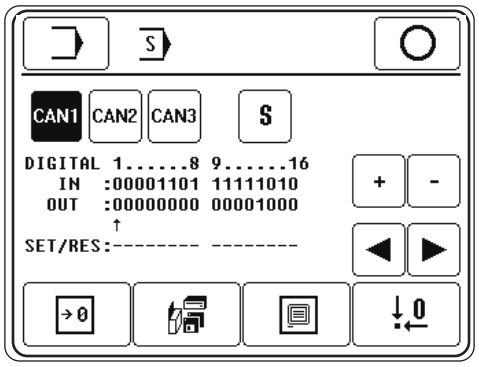

- Call up the "adjusting the zero points" function and enter the code number with the figure keys.

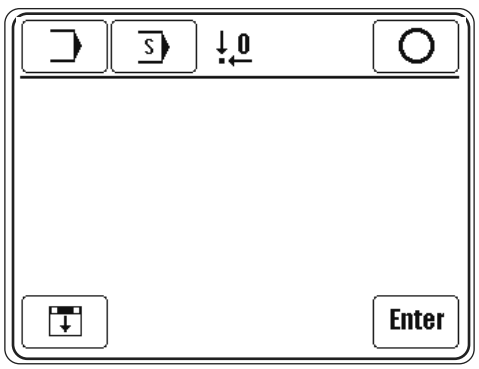

- Insert the clamp.

Enter

- Confirm the operation and continue the cycle.

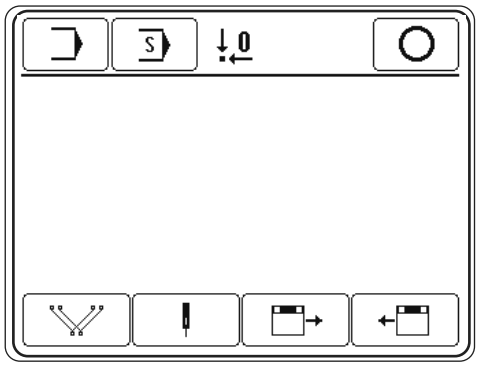

- Call up the "needle position" function.

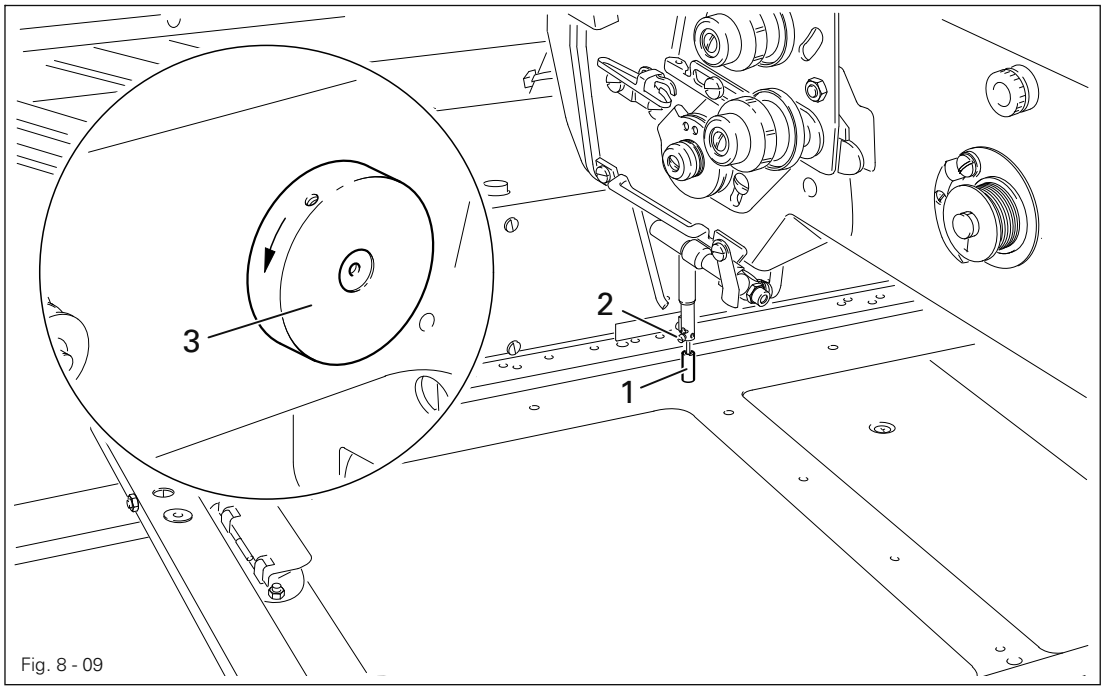

Fig. 8 - 09

- With screw **2** fasten adjustment pin **1** in the needle bar.
- By turning balance wheel **3** check whether the adjustment pin **1** can be guided into the clamp adjustment hole.

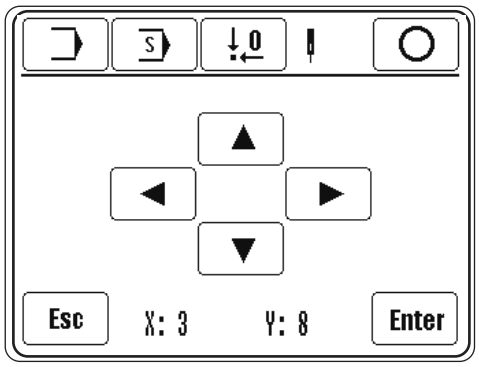

- If necessary, correct the clamp position accordingly with the direction symbols.

Enter

- Save the setting, loosen screw **2** and remove adjustment pin **1**.

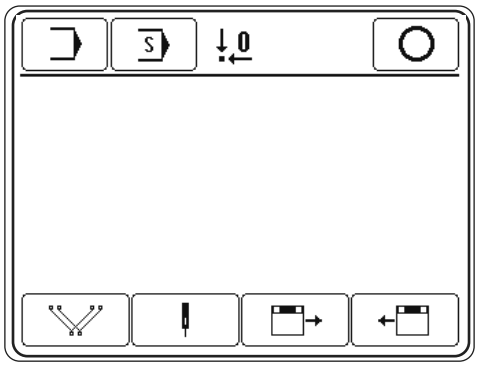

The feeder hand over position must only be checked if a clamp feeder is attached.

- Call up the "hand-over position" function.

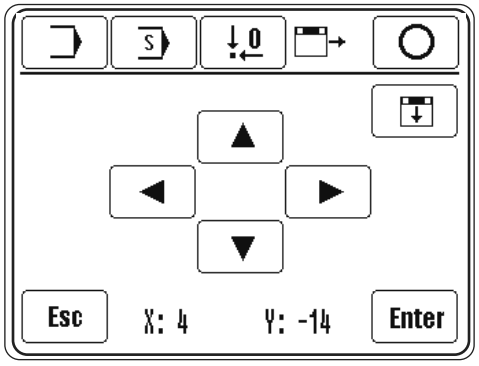

- Switch the clamp indexing to and fro between the clamp feed and clamp drive.
- Check whether the clamp moves when the indexing is changed.
- If the clamp moves, correct the clamp position accordingly with the direction symbols.

Enter

- Save the setting.

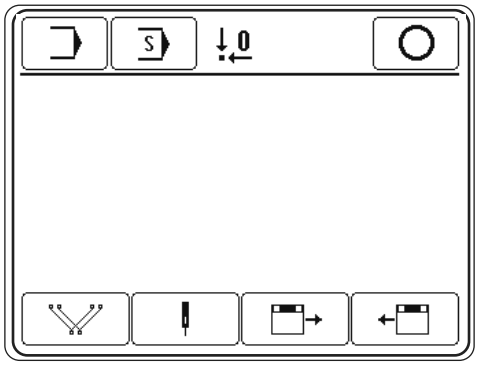

- Call up the "take-over position" function.

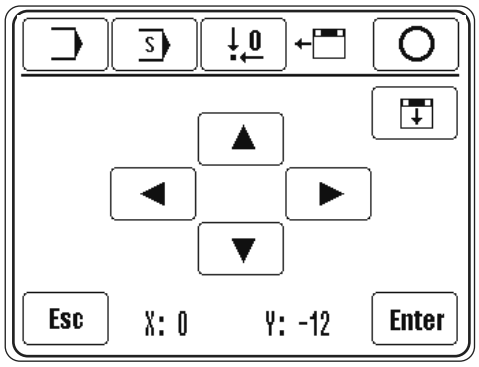

- Switch the clamp indexing to and fro between the clamp feed and clamp drive.
- Check whether the clamp moves when the indexing is changed.
- If the clamp moves, correct the clamp position accordingly with the direction symbols.

Enter

- Save the setting.

- Conclude the zero points input.

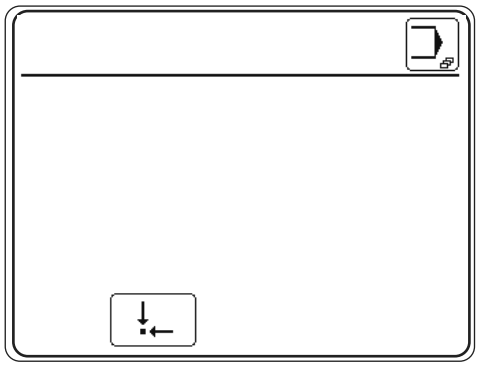

- Move the machine to the basic position. The machine is ready for operation.

Register 05

9 Preparation

All regulations and instructions in this Instruction Manual are to be observed!
Special attention is to be paid to the safety regulations!

All preparation work is only to be carried out by appropriately trained personnel!

9.01 Inserting the needle

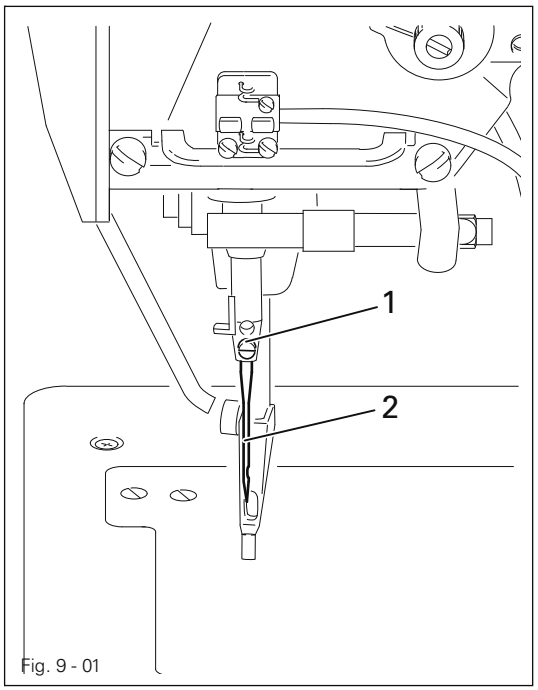

Fig. 9 - 01

Only use needles from the system intended for the machine, see Chapter **3 Specifications.**

- Switch on the machine.
- Call up the threading aid function.
  The clamp moves to its basic position, the sewing start function is blocked.
- Loosen screw **1** and insert needle **2** as far as possible into the needle bar.
- Align needle **2** so that the long needle groove is facing the carriage guide, and tighten screw **1**.
- Start the sewing cycle

or

- Move the machine to its basic position.

9.02 Winding the bobbin thread, adjusting the thread tension

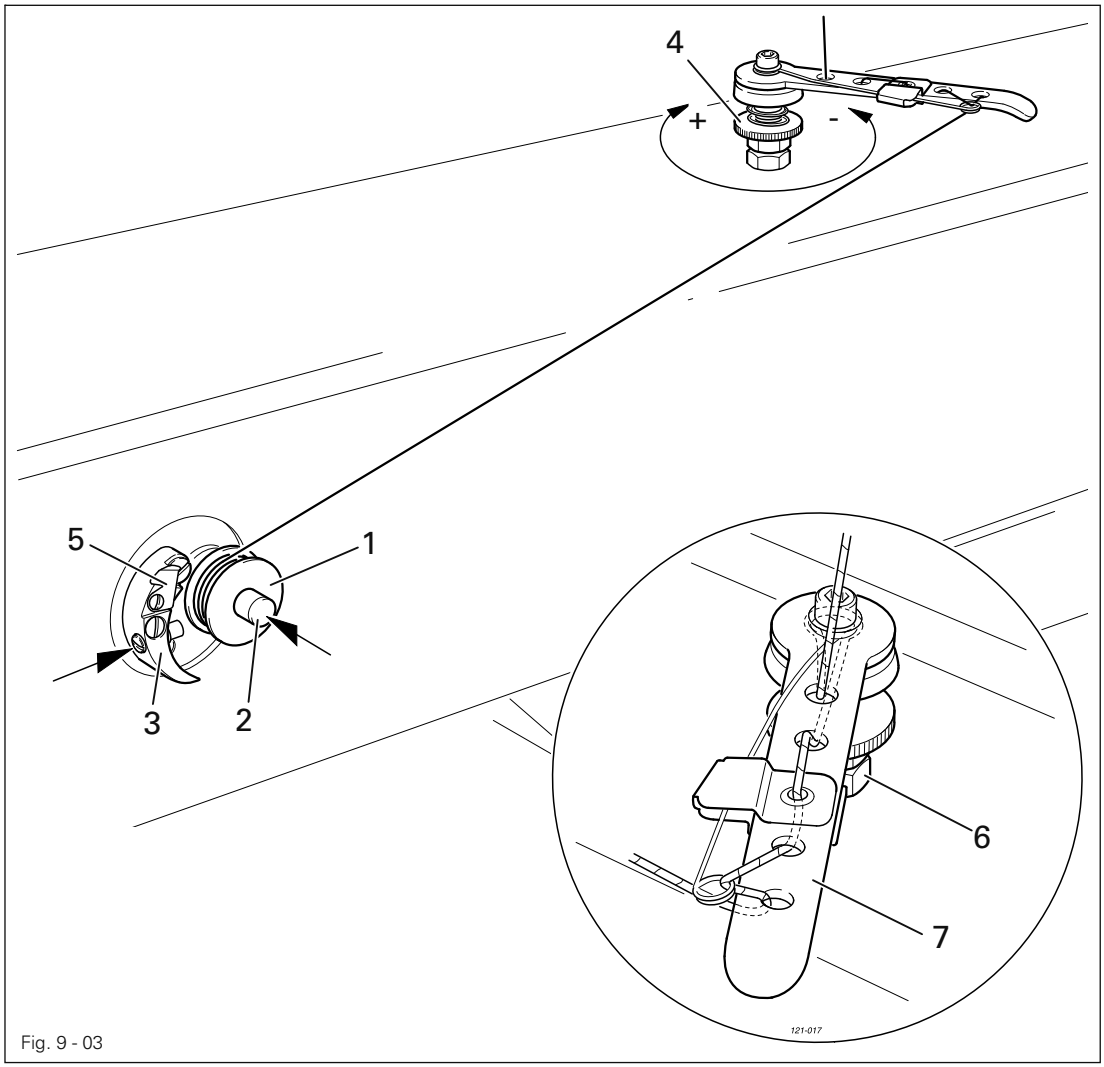

Fig. 9 - 03

- Switch on the machine.
- Place an empty bobbin **1** onto bobbin shaft **2**.
- Thread the bobbin in accordance with Fig. **9-02** and wind it anti-clockwise around bobbin **1** a few times.
- Switch on the bobbin winder while at the same time pressing bobbin winder spindle **2** and lever **3**.

The bobbin fills up during sewing.

- The tension of the thread on bobbin **1** can be adjusted with knurled screw **4**.
- The bobbin winder stops automatically when bobbin **1** is full.
- Remove the filled bobbin **1** and cut the thread on knife **5**.

If the thread is wound unevenly, loosen nut **6** and turn thread guide **7** accordingly. Retighten nut **6** after the adjustment

To adjust the filling capacity, see Chapter **13.05.23 Bobbin winder**.

9.03 Changing the bobbin / adjusting the bobbin thread tension

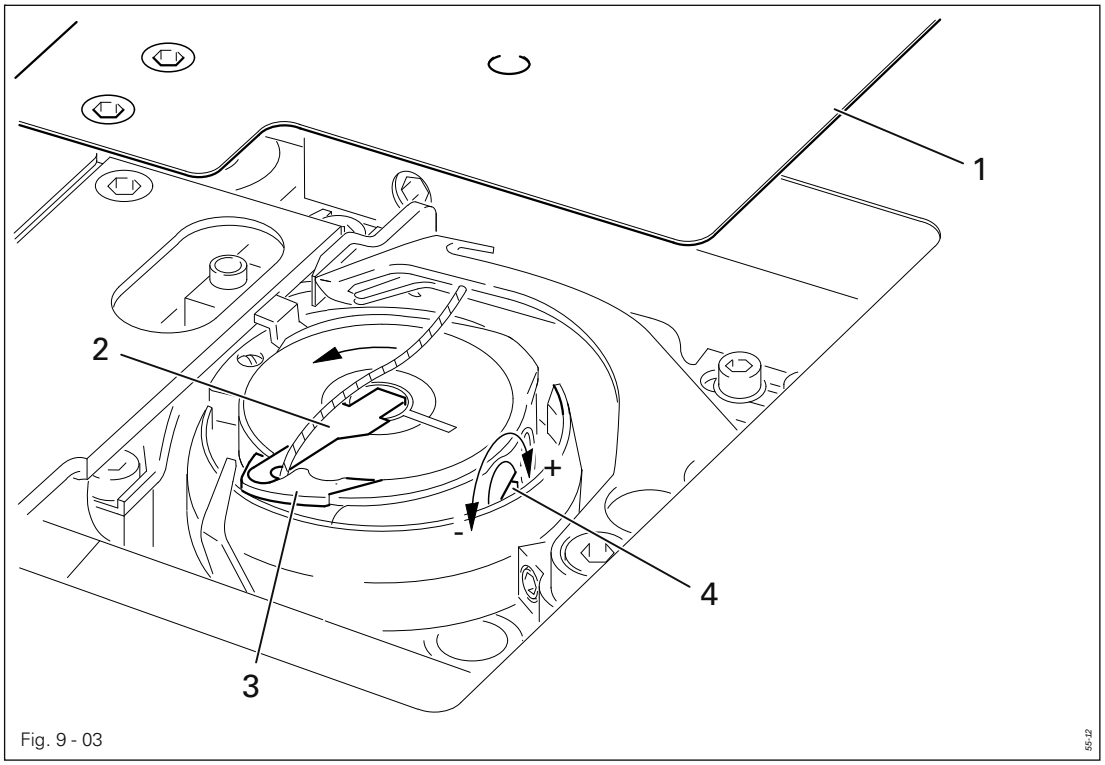

Fig. 9 - 03

- When the number of stitches entered previously under the "bobbin thread stitch counter" function (see Chapter 9.09) have been sewn, or if the "bobbin change" function is called up, the clamp moves automatically to its basic position and the hook compartment cover 1 opens.
- Raise latch 2 and remove empty bobbin.
- Insert full bobbin into the hook so that it turns in the direction of the arrow when the thread is pulled out.
- Close latch 2.
- First feed the thread through the groove and then around the horn of the bobbin case 3 and into the recess of latch 2.
- Adjust the bobbin thread tension by turning screw 4
- Start the sewing cycle

or

- Move the machine to its basic position.

9.04 Threading the needle / adjusting the needle thread tension

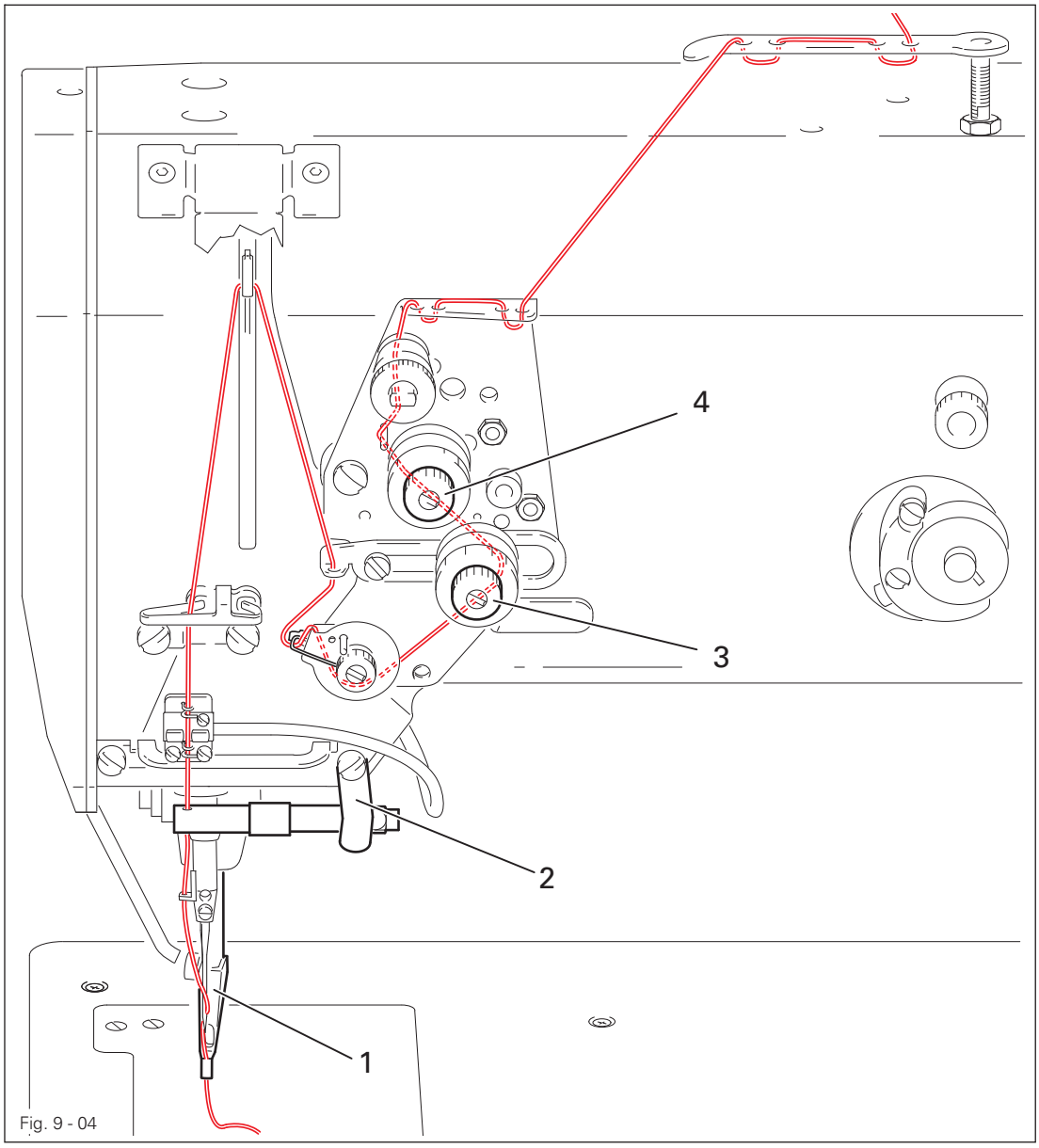

Fig. 9 - 04

- Switch on the machine.
- Call up the threading aid function.
  The clamp moves to its basic position, the vibrating presser is lowered, the sewing start function is blocked.
- Thread needle thread as illustrated above.
- Adjust needle thread tension by turning knurled screw **3**.

The secondary tension can be adjusted by turning knurled screw **4**.

- Start the sewing cycle

or

- Move the machine to its basic position.

9.05 Selecting the program number

- Switch on the machine.

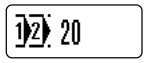

- Call up the program number input menu.

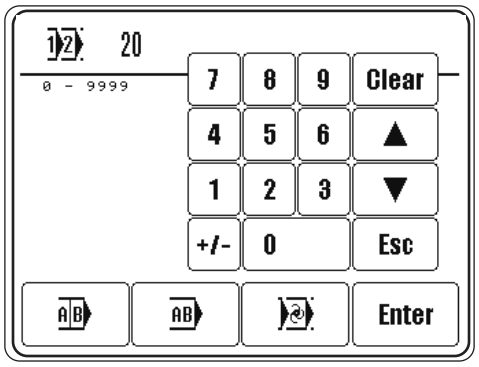

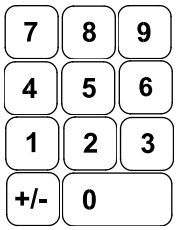

- Select the desired program number (0 – 9999) using the number block.



- Confirm the selection and quit the selection menu.

Description of the other functions



Clear
This function sets the value at "0".



Arrow keys
These functions increase or reduce the value.



Esc
This function stops the input without taking over the value entered.



Sequence selection
This function opens the menu for selecting or configuring the sequence, see Chapter 9.06 Selecting / configuring the sequence.



Linked programs
This function opens the menu for selecting or combining linked programs, see Chapter 9.07 Selecting / combining linked programs.



Automatic program selection
When this function is active, the corresponding seam program is identified and selected automatically with the clamp code, see Chapter 9.08 Automatic Program Selection.

9.06 Selecting / configuring a sequence

9.06.01 Selecting a sequence

Instead of selecting a program number, it is also possible to select a corresponding sequence, providing that individual seam programs have been allocated to a sequence, see Chapter 9.06.02 Configuring a sequence

- Switch on the machine.

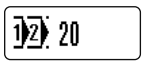

- Call up the menu for entering the program number.



- Call up the menu for entering the sequence.

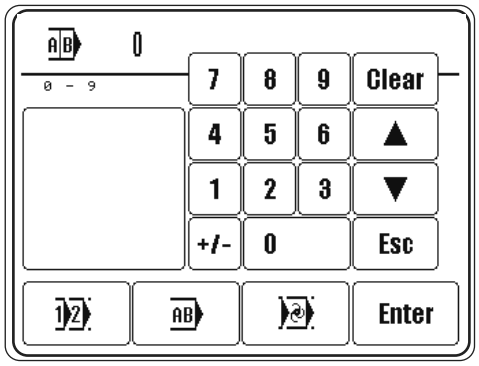

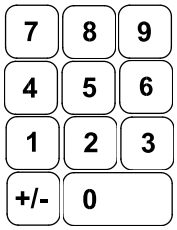

- Select the desired sequence number (0 – 9) using the number block.



- Confirm the selection and quit the selection menu.

Description of the other functions



Clear
This function sets the value at "0".



Arrow keys
These functions increase or reduce the value.



Esc
This function stops the input without taking over the value entered.

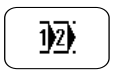

Program selection
This function opens the menu for selecting a program, see Chapter 9.05 Selecting a program number.

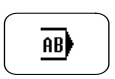

Linked programs
This function opens the menu for selecting or combining linked programs, see Chapter 9.07 Selecting / combining linked programs.

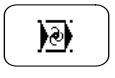

Automatic program selection
When this function is active, the corresponding seam program is identified and selected automatically with the clamp code, see Chapter 9.08 Automatic Program Selection.

9.06.02 Configuring a sequence

Up to 8 seam programs can be allocated to a sequence. During sewing the seam programs of a selected sequence appear as a function on the display and can be selected directly.

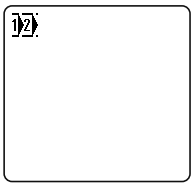

- Call up the menu for entering the sequence and select the desired sequence number without leaving the selection menu, see 9.06.01 Selecting a sequence.
- Call up the sequence programming function.
- Configure the sequence from existing seam programs by entering the program numbers on the number block.

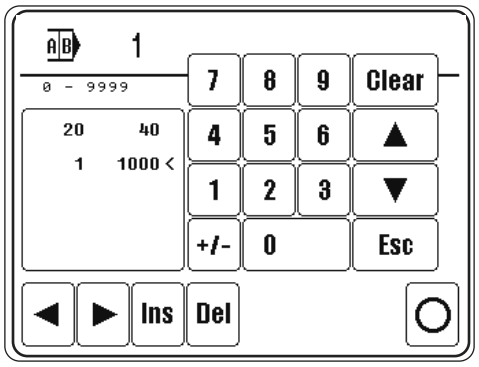

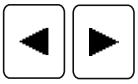

- The cursor in the window shows, which seam program has been taken out of the group, or at which position a new seam program has been inserted. The cursor is moved with the arrow keys.



- If applicable, insert (INS) the seam program at the current cursor position, or delete (DEL) the marked seam program from the sequence.



- Conclude the sequence programming function.

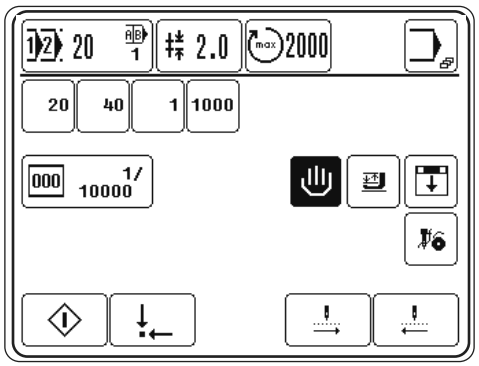



To enable, for example, quicker access to up to 8 different seam programs, the function for automatic switching to the next seam program of a sequence function can be switched off with parameter "114", see Chapter 13.09.02 List of parameters.

9.07 Selecting / combining linked programs

9.07.01 Selecting linked programs

Unlike sequences, linked programs can all be processed with one clamp. To be able to select linked programs, individual seam programs must have been linked, see Chapter 9.07.02 Combining linked programs.

- Switch on the machine.

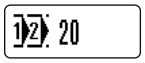

- Call up the menu for entering the program number.



- Call up the menu for entering linked programs.

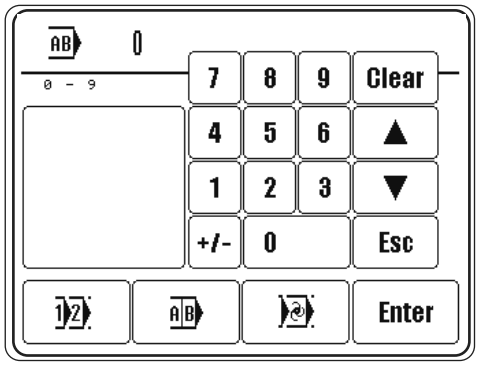

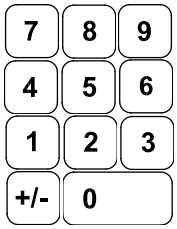

- Select the desired number for linked programs (0 – 9) using the number block.



- Confirm the selection and quit the selection menu.

Description of the other functions



Clear
This function sets the value at "0".



Arrow keys
These functions increase or reduce the value.



Esc
This function stops the input without taking over the value entered.

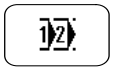

Program selection
This function opens the menu for selecting a program, see Chapter 9.05 Selecting a program number.



Sequence selection
This function opens the menu for selecting or configuring a sequence, see Chapter 9.06 Selecting / configuring a sequence.



Automatic program selection
When this function is active, the corresponding seam program is identified and selected automatically with the clamp code, see Chapter 9.08 Automatic Program Selection.

9.07.02 Combining linked programs

Up to 8 seam programs can be combined. After the corresponding program number has been selected during sewing, the combined seam programs appear as a function on the display and can be selected directly.

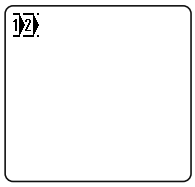

- Call up the menu for entering combined programs and select the desired number without leaving the selection menu, see Chapter 9.07.01 Selecting linked programs.
- Call up the combined programs programming function.

- Combine existing seam programs by entering the program numbers on the number block.

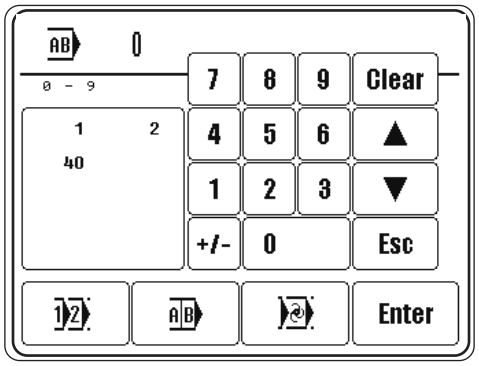

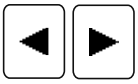

- The cursor in the window shows, which seam program has been taken out of the combination, or at which position a new seam program has been inserted. The cursor is moved with the arrow keys.



- If applicable, insert (INS) the seam program at the current cursor position, or delete (DEL) the marked seam program from the combination.



- Conclude programming.

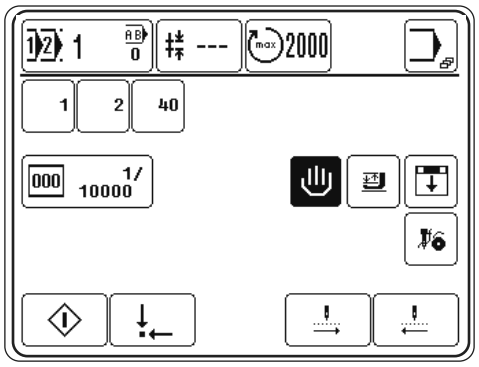



Switching among combined programs always takes place automatically.

9.08 Automatic program selection

9.08.01 Calling up the automatic program selection function

For automatic program selection, the appropriate seam program is selected automatically with a code on the clamp, also see Chapter **9.08.02 Defining the clamp code**.

- Switch on the machine.

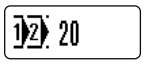

- Call up the menu for entering the program number.

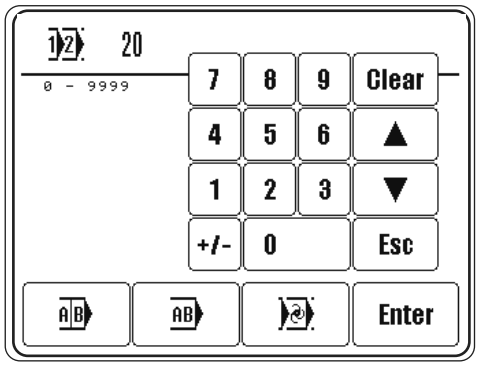



- Select the automatic program selection function.

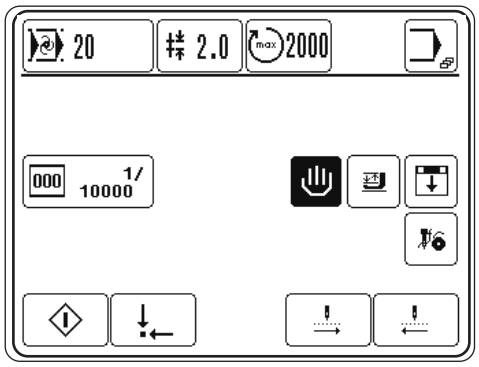

To enable work with the automatic program selection function, the following parameter setting must be made, also see Chapter **13.09.02 List of Parameters**.

Parameter	Value
109 (clamp monitoring)	0 - off 1 -clamp monitoring 2 - automatic program number selection
202 (clamp code)	0 - not attached 1 - BCD 2 - binary 3 - barcode

The clamp code is read as soon as the clamp indexing function has been closed.

9.08.02 Determining a clamp code

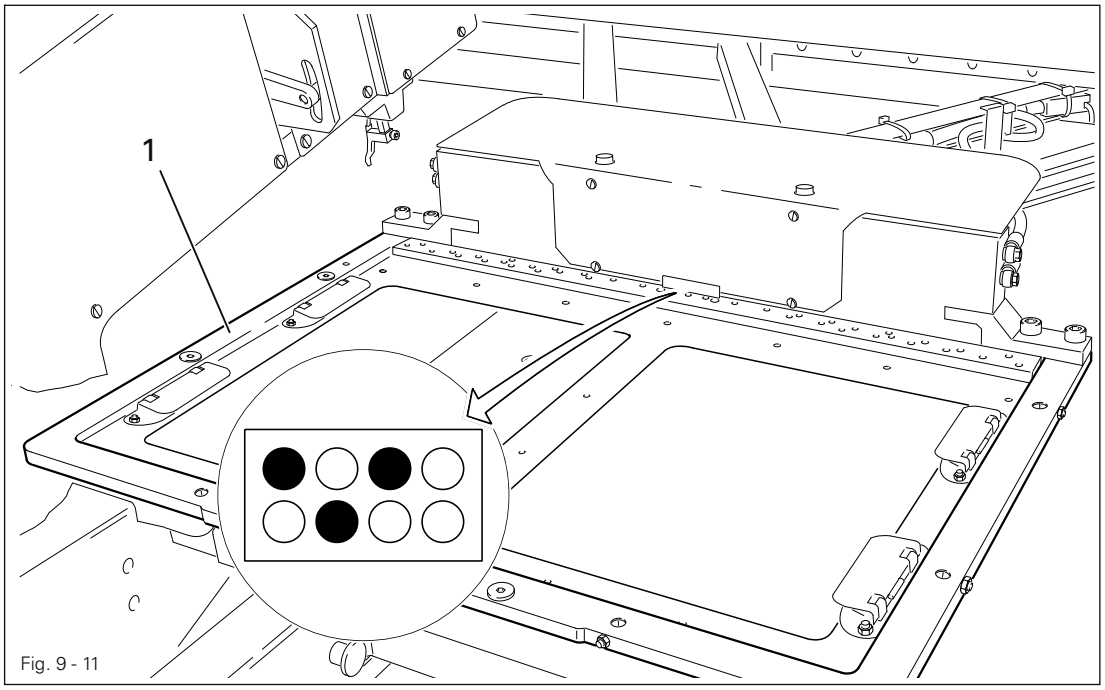

Fig. 9 - 11

For monitoring the clamp, with the attachment of magnets clamp **1** is provided with a code. The control unit is able to recognize the code and avoids sewing with a wrong combination of seam program and clamp.
The clamp monitoring function (parameter "**109**") must be switched on, the code type must be stipulated (parameter "**202**") and a clamp code must be entered in the seam program as a decimal value (**0 – 99**) or as a binary value (**0 – 254**).
The code is set up on the clamp by arranging up to **8** magnets as a BCD number or as a binary number.

Examples of the bit assignment for the BCD-code
(the decimal value of the corresponding bits is written inside the circle)

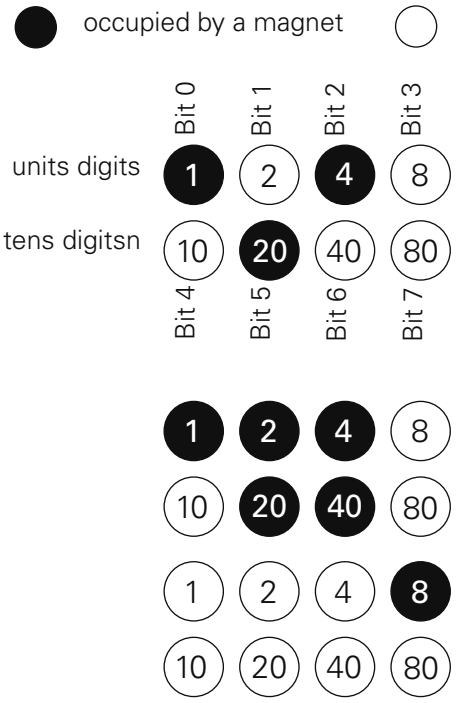

(1 + 20 + 4) = **clamp code: 25**

(1 + 2 + 20 + 4 + 40) = **clamp code: 67**

= **clamp code: 8**

Examples of the bit assignment for the BCD-code
(the decimal value of the corresponding bits is written inside the circle)

● occupied by a magnet ○ free

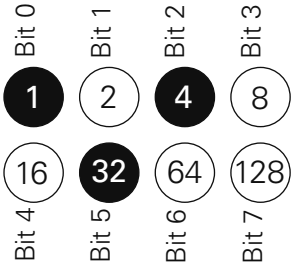

(1 + 4 + 32) = **clamp code: 37**

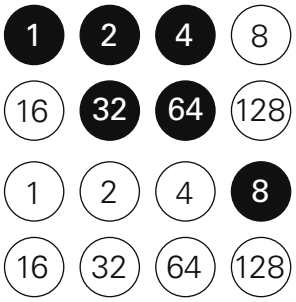

(1 + 2 + 4 + 32 + 64) = **clamp code: 103**

= **clamp code: 8**

9.08.03 Determining a program number

- The program number is coded on the clamp magnetically, see Chapter **9.08.02 Determining a clamp code**.
- If several programs are sewn alternately when working with automatic program number selection, care must be taken to ensure that the program codes differ by more than one magnet.
- All programs, which are not being sewn currently, should not be in the machine memory.

These measures prevent the selection of a different program, which is also in the machine memory, if one position is read incorrectly (e.g. in the case of a cable fault)

If the wrong program is recognised, the jig could be damaged.

9.09 Setting the bobbin thread stitch counter

- Switch on the machine.

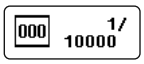

- Call up the menu for entering the number of bobbin thread stitches.

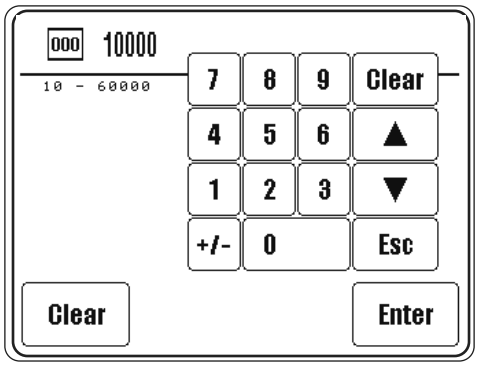

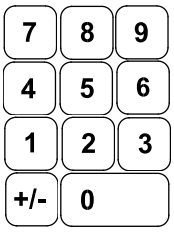

- Enter the number of stitches on the number block.



- Conclude the input.



After sewing the number of bobbin thread stitches, the machine stops automatically for changing the bobbin.

Description of the other functions



Clear (on number block)
This function sets the input value at "0".



Arrow keys
These functions increase or reduce the value.



Esc
This function stops the input without taking over the value entered.



Clear (in foot text)
This function sets the bobbin thread counter (number of stitches sewn) at "0".

10 Sewing

The machine may only be operated by appropriately instructed personnel! The operating staff must make sure that only authorized persons are in the danger area of the machine!

In particular for the production, in addition to the input mode, see Chapter **11 Input**, the sewing mode is available. Here, depending on the program selection and the machine status, all relevant functions and settings for the production are shown on the display. Automatic operation is standard, but it is possible to switch to manual operation when setting up and checking operating sequences.

Before production the following conditions must be fulfilled:

- All safety devices must be attached and all covers closed see, Chapter **1.06 Danger warnings**.
- The machine must be properly installed and commissioned in accordance with Chapter **8 Installation and commissioning**.
- All setting-up work must have been carried out, see Chapter **9 Setting-up**.

10.01 Sewing without clamp feeder

For sewing without clamp feeder, the parameter "**110**" must be set at "**0**", see Chapter **13.09.02 List of parameters**

- Switch on the machine.
- Select the desired program number, see Chapter **9.05** Selecting a program number.

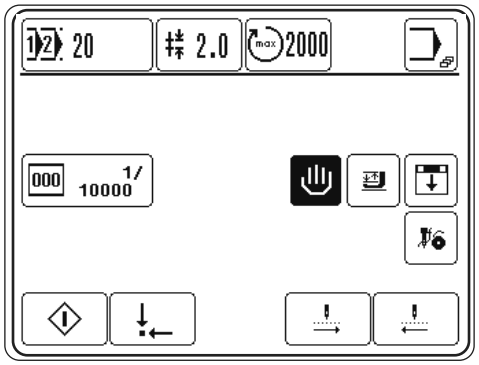

- Insert the clamp.
- Close the clamp indexing function (only if manual program start has been selected).
- Start the sewing cycle (only if manual program start has been selected).

Description of the functions

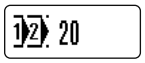

Program number selection
This function opens the menu for entering the program number. The current program number is shown in the symbol together with the appropriate parts program number.



Standard stitch length
This function opens the menu for entering the standard stitch length. The current stitch length is shown in the symbol.



Maximum speed
This function opens the menu for entering the maximum speed. The current maximum speed is shown in the symbol.



Input menu
This function is used to call up the "input mode" see Chapter 11 Input.



Bobbin thread stitch counter
This function opens the menu for entering and resetting the number of stitches for the bobbin thread, see Chapter 9.09 Setting the bobbin thread stitch counter.

Manual / automatic program start
This functions changes between automatic and manual program start. The corresponding symbol of the current operating status is shown respectively.



In the case of a manual program start, the clamp is locked into position and the sewing cycle is started by operating the foot switch or by calling up the "open/close clamp" and "start" functions.



In the case of an automatic program start, the clamp is automatically locked into position when inserted and the sewing cycle starts automatically.



Vibrating presser up / down
This function is used to raise or lower the vibrating presser. In addition the thread clamp is opened or closed.



Search (only within the program cycle)
With this function the sewing head is raised and the carriage can be moved near the desired seam pattern point with appropriate direction symbols. After the position has been confirmed, the machine moves towards the nearest point of the seam pattern.



Threading aid
With this function the feeder and the clamp are moved away from the machine sewing head. The bobbin cover and the thread clamp are opened, the vibrating presser is lowered.



Basic position
This function is used to move the clamp guide, sewing station and clamp drive unit to the basic position.



Tacting forwards
This function is used to move forwards in sections in the seam pattern tact for tact. The seam cycle is sewn automatically, if the function is pressed longer.



Tacting backwards

This function is used to move backwards in sections in the seam pattern tact for tact. The seam cycle is sewn automatically, if the function is pressed longer.



Stop (only during the program cycle)

This function is used to stop the entire program cycle, see Chapter **10.07 Program interruption.**

10.02 Sewing with clamp feeder

For sewing with the clamp feeder, the parameter "**110**" must be set at "**1**", see Chapter **13.09.02 List of parameters**

- Switch on the machine.
- Select the desired program number, see Chapter **9.05 Selecting a program number.**

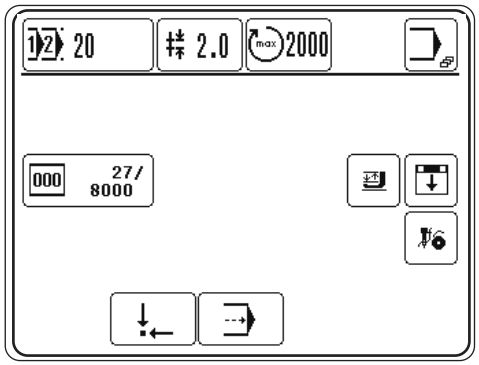

- Insert the clamp.
- Start the program cycle by pressing the start key, see Chapter **7.03 Stop key / start key.**

Description of the functions

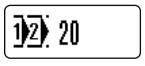

Program number selection
This function opens the menu for entering the program number. The current program number is shown in the symbol.



Standard stitch length
This function opens the menu for entering the standard stitch length. The current stitch length is shown in the symbol.



Maximum speed
This function opens the menu for entering the maximum speed. The current maximum speed is shown in the symbol.



Input menu
This function is used to call up the "input mode" see Chapter **11 Input.**

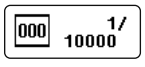

Bobbin thread stitch counter
This function opens the menu for entering and resetting the number of stitches for the bobbin thread, see Chapter **9.09 Setting the bobbin thread stitch counter.**



Vibrating presser up / down
This function is used to raise or lower the vibrating presser. In addition the thread clamp is opened or closed.



Search (only within the program cycle)
With this function the sewing head is raised and the carriage can be moved near the desired seam pattern point with appropriate direction symbols. After the position has been confirmed, the machine moves towards the nearest point of the seam pattern.



Threading aid
With this function the feeder and the clamp are moved away from the machine sewing head. The bobbin cover and the thread clamp are opened, the vibrating presser is lowered.



Basic position
This function is used to move the machine to the basic position.



Single step
With this function the clamp feeder can be moved tact for tact.



Tacting forwards
This function is used to move forwards in sections in the seam pattern tact for tact. The seam cycle is sewn automatically, if the function is pressed longer.



Tacting backwards
This function is used to move backwards in sections in the seam pattern tact for tact. The seam cycle is sewn automatically, if the function is pressed longer.



Stop (only during the program cycle)
This function is used to stop the entire program cycle, see Chapter **10.07 Program interruption.**

10.03 Sewing with sequences

To sew with sequences, parameter "**114**" must be set at value "**1**", see Chapter **13.09.02 List of parameters**.

- Switch on the machine.
- Select the desired sequence, see Chapter **9.06.01 Selecting a sequence**.

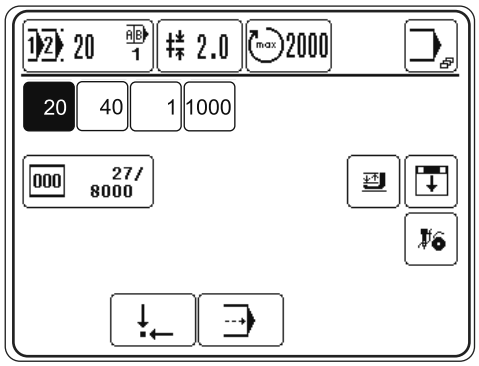

- Insert the clamp
- Start the program cycle by pressing the start key, see Chapter **7.03 Stop key / start key.**

Description of the functions

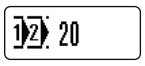

Program number selection
This function opens the menu for entering the program number. The current program number is shown in the symbol. If the function for moving automatically to the next sequence is activated, the sequence symbol is shown as inverse.



Standard stitch length
This function opens the menu for entering the standard stitch length. The current stitch length is shown in the symbol.



Maximum speed
This function opens the menu for entering the maximum speed. The current maximum speed is shown in the symbol.



Input menu
This function is used to call up the "input mode" see Chapter **11 Input.**

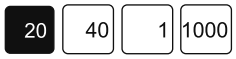

Individual program
This function depends on the setting of parameter "**114**" (moving automatically to next sequence), see Chapter **13.09.02 List of parameters.**
If the function for moving automatically to the next sequence is activated (value "I", this) function is used to show the symbol for the next individual program to be sewn as inverse.
If the function for moving automatically to the next sequence is deactivated (value "**0**",) this function is used for the quick selection of the highlighted seam programs.

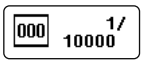

Bobbin thread stitch counter
This function opens the menu for entering and resetting the number of stitches for the bobbin thread, see Chapter 9.09 Setting the bobbin thread stitch counter.



Vibrating presser up / down
This function is used to raise or lower the vibrating presser. In addition the thread clamp is opened or closed.



Search (only within the program cycle)
With this function the sewing head is raised and the carriage can be moved near the desired seam pattern point with appropriate direction symbols. After the position has been confirmed, the machine moves towards the nearest point of the seam pattern.



Threading aid
With this function the feeder and the clamp are moved away from the machine sewing head. The bobbin cover and the thread clamp are opened, the vibrating presser is lowered.



Basic position
This function is used to move the machine to the basic position.



Single step
With this function the clamp feeder can be moved tact for tact.



Tacting forwards
This function is used to move forwards in sections in the seam pattern tact for tact. The seam cycle is sewn automatically, if the function is pressed longer.



Tacting backwards
This function is used to move backwards in sections in the seam pattern tact for tact. The seam cycle is sewn automatically, if the function is pressed longer.



Stop (only during the program cycle)
This function is used to stop the entire program cycle, see Chapter 10.07 Program interruption.

10.04 Sewing with linked programs

- Switch on the machine.
- Select the desired number for linked programs, see Chapter 9.07.01 Selecting linked programs.

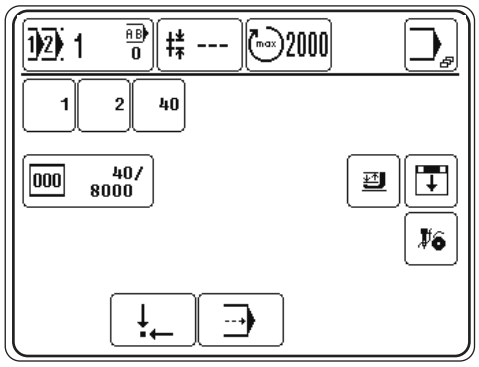

- Insert the clamp.
- Start the program cycle by pressing the start key, see Chapter 7.03 Stop key / start key.

Description of the functions

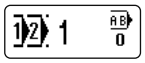

Program number selection
This function opens the menu for entering the program number. The current program number is shown in the symbol.



Standard stitch length
This function opens the menu for entering the standard stitch length. The current stitch length is shown in the symbol.



Maximum speed
This function opens the menu for entering the maximum speed. The current maximum speed is shown in the symbol.



Input menu
This function is used to call up the "input mode" see Chapter 11 Input.



Individual programs
With these functions it is possible to select the next individual program due to be processed.

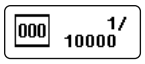

Bobbin thread stitch counter
This function opens the menu for entering and resetting the number of stitches for the bobbin thread, see Chapter 9.09 Setting the bobbin thread stitch counter.



Vibrating presser up / down
This function is used to raise or lower the vibrating presser. In addition the thread clamp is opened or closed.



Search (only within the program cycle)
With this function the sewing head is raised and the carriage can be moved near the desired seam pattern point with appropriate direction symbols. After the position has been confirmed, the machine moves towards the nearest point of the seam pattern.



Threading aid
With this function the feeder and the clamp are moved away from the machine sewing head. The bobbin cover and the thread clamp are opened, the vibrating presser is lowered.



Basic position
This function is used to move the machine to the basic position.



Single step
With this function the clamp feeder can be moved tact for tact.



Tacting forwards
This function is used to move forwards in sections in the seam pattern tact for tact. The seam cycle is sewn automatically, if the function is pressed longer.



Tacting backwards
This function is used to move backwards in sections in the seam pattern tact for tact. The seam cycle is sewn automatically, if the function is pressed longer.



Stop (only during the program cycle)
This function is used to stop the entire program cycle, see Chapter **10.07 Program interruption.**

10.05 Sewing with automatic program selection

For sewing with automatic program selection, the parameter "109" must be set at "2", see Chapter 13.09.02 List of parameters

- Switch on the machine.
- Select the automatic program selection function, see Chapter 9.08.01 Automatic program selection.

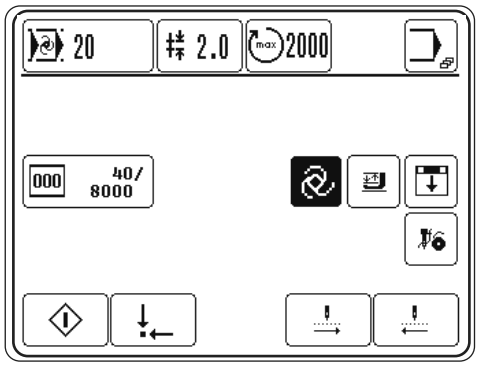

- Insert the clamp.
- Close the clamp indexing function (only if manual program start has been selected).
- Start the sewing cycle (only if manual program start has been selected).

Description of the functions

Program number selection
This function opens the menu for entering the program number. The current program number is shown in the symbol.

Standard stitch length
This function opens the menu for entering the standard stitch length. The current stitch length is shown in the symbol.

Maximum speed
This function opens the menu for entering the maximum speed. The current maximum speed is shown in the symbol.

Input menu
This function is used to call up the "input mode" see Chapter 11 Input.

Bobbin thread stitch counter
This function opens the menu for entering and resetting the number of stitches for the bobbin thread, see Chapter 9.09 Setting the bobbin thread stitch counter.

Manual / automatic program start
This functions changes between automatic and manual program start. The corresponding symbol of the current operating status is shown respectively.



In the case of a manual program start, the clamp is locked into position and the sewing cycle is started by operating the foot switch or by calling up the "open/close clamp" and "start" functions.



In the case of an automatic program start, the clamp is automatically locked into position when inserted and the sewing cycle starts automatically.



Vibrating presser up / down

This function is used to raise or lower the vibrating presser. In addition the thread clamp is opened or closed.



Search (only within the program cycle)

With this function the sewing head is raised and the carriage can be moved near the desired seam pattern point with appropriate direction symbols. After the position has been confirmed, the machine moves towards the nearest point of the seam pattern.



Threading aid

With this function the feeder and the clamp are moved away from the machine sewing head. The bobbin cover and the thread clamp are opened, the vibrating presser is lowered.



Basic position

This function is used to move the machine to the basic position.



Tacting forwards

This function is used to move forwards in sections in the seam pattern tact for tact. The seam cycle is sewn automatically, if the function is pressed longer.



Tacting backwards

This function is used to move backwards in sections in the seam pattern tact for tact. The seam cycle is sewn automatically, if the function is pressed longer.



Stop (only during the program cycle)

This function is used to stop the entire program cycle, see Chapter **10.07 Program interruption.**

10.06 Program interruption

A program sequence can be interrupted
by pressing the stop button, see Chapter 7.03 Stop/start buttons
or
by pressing the "stop" key on the control panel.

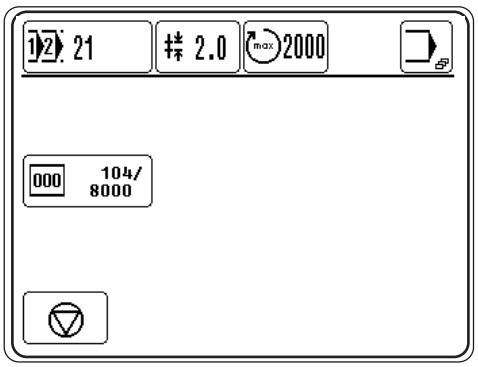

If the machine is stopped in this way, the sewing unit and the clamp drive are not in their starting position!

- Continue program cycle

Or

- Move machine near the desired point.

10.07 Error messages

If a malfunction occurs, an error code appears on the display. An error message may be caused by incorrect operation, machine defects, as well as by overload conditions.
(For a description of the error codes see Chapter **14.02 Description of the error codes)**.

Errors when connecting outputs

If an error occurs when connecting an output, the output concerned is shown with the desired switching state (**0**) or (I).
In this case (**0**) means the output should be disconnected and (I) means that the output should be connected.
In the next line the cause leading to the error is displayed.
The target state for maintaining undisturbed operation is shown in brackets.
In the following example the output **Y1** is to be connected.
Requirement: **E1** must be set at (**1**).

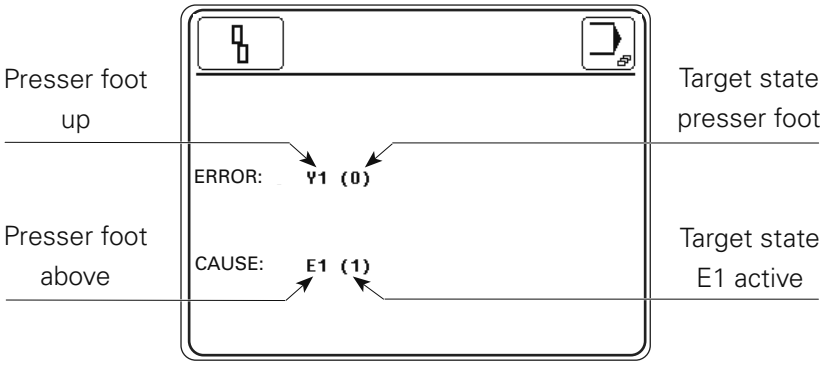

- Check **E1** and eliminate error.

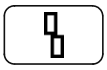

- Acknowledge elimination of the error..

11 Input

In addition to the functions for entering or altering seam programs, in the input mode there are functions for displaying information, for program management, for machine configuration and settings (country settings and access codes etc.), as well as for supporting service and adjustment work.
In the input mode the machine start function is blocked to avoid an unintentional start-up of the machine.

11.01 Overview of the functions in the input mode

- Switch on the machine.



- Call up the input mode.

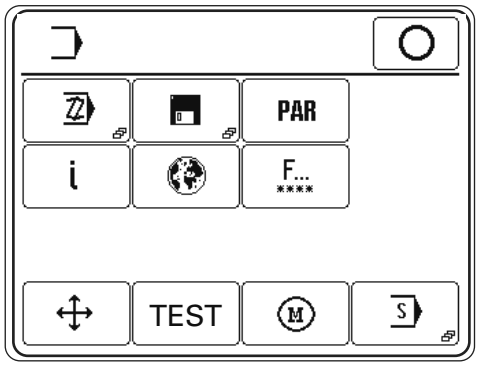

Description of the functions



Conclude input
This function is used to conclude the input, and the machines changes to the sewing mode.

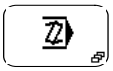

Seam program input
This function is used to call up the menu for entering or altering seam programs, see Chapter **11.02 Creating / altering seam programs.**

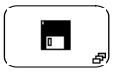

Program management
This function is used to manage the data from the machine memory and CD-Card, see Chapter **11.04 Program management.**



Parameter settings
This function is used to call up the menu for altering parameter settings, see Chapter **13.09 Parameter settings**.

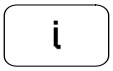

Info

This function opens a menu for displaying the following information:

- current software status of the machine
- current firmware status of the machine
- current firmware status of the control panel
- current firmware status of the motor
- day piece counter
- operating hours meter
- production hours meter



The day piece counter can be reset with the "Clear" function.



Country settings

This function opens a menu for selecting the language shown on the control panel, see Chapter 8.07 Selecting the language and units.

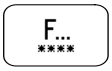

Rights of access

This function opens a menu for fixing the rights of access, see Chapter 11.05 Rights of access.

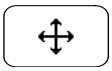

Stepping motors

This function opens a menu for moving the stepping motors.



Testing the carriage

This function opens a menu for selecting and running through a program for the purpose of testing the carriage reference points.

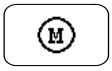

Sewing motor

This function opens a menu for testing and adjusting the sewing motor, see Chapter 13.08 Menu for the sewing motor.

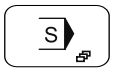

Service menu

This function is used to call up the menu for selecting various service functions, see Chapter 13.07 Service menu.

11.02 Creating / altering seam programs

- Switch on the machine.



- Call up the input mode.

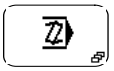

- Call up the seam program input function.

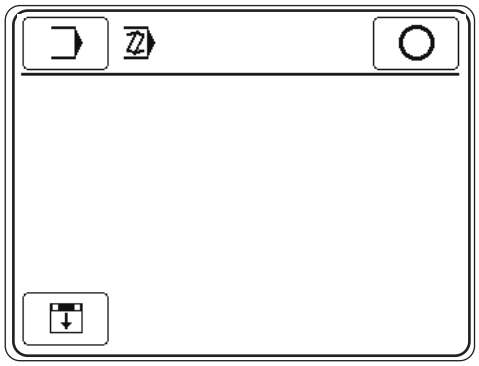

- Insert the clamp.



- Close the clamp indexing function.

Enter

- Confirm the operation.

7 8 9
4 5 6
1 2 3
+/- 0

- Reinsert the desired program number or select the desired program.

Enter

- Confirm the seam number selection.

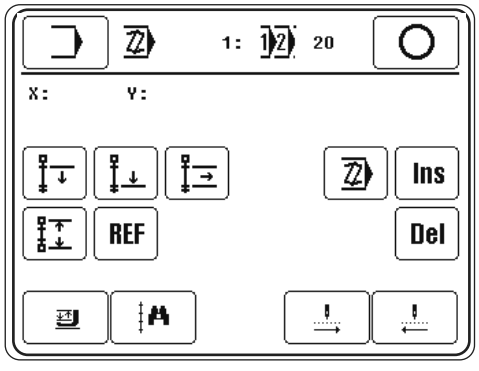

Description of the functions



Input menu
This function ends the programming operation and opens the basic input menu, see Chapter 11.01 Overview of the functions in the input mode.

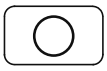

Conclude input
This function is used to conclude the input, and the machines changes to the sewing mode.



Mark block start
This function is used to define the start of a block, see Chapter 11.02.01 Block functions.



Mark block end
This function is used to define the end of a block, see Chapter 11.02.01 Block functions.



Block functions
This function opens a menu for entering block functions, see Chapter 11.02.01 Block functions.



Image functions
This function opens a menu for entering image functions, see Chapter 11.02.02 Image functions.



Coordinate reference points
This function is used to set the coordinates on the display at "0", in this way creating a new reference point.



Edit
After selecting this function, the current section can be edited.



Insert
This function is used to insert functions or blocks, see Chapter 11.02.03 Inserting functions.



Delete
This function is used to delete the current section.



Sewing foot up/down
This function is used to raise or lower the sewing foot. In addition the thread trapper is opened or closed.

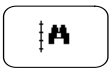

Search
With this function the sewing head is raised and the carriage can be moved near the desired seam pattern point with appropriate direction symbols. After the position has been confirmed, the machine moves towards the nearest point of the seam pattern.



Tacting forwards
This function is used to move forwards in sections in the seam pattern tact for tact. The seam cycle is sewn automatically, if the function is pressed longer.



Tacting backwards
This function is used to move backwards in sections in the seam pattern tact for tact. The seam cycle is sewn automatically, if the function is pressed longer.

11.02.01 Block functions

- Switch on the machine.



- Call up the input mode.

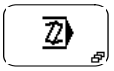

- Call up the seam program input function.

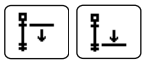

- Define block start and block end
  After a desired point in the program has been selected with the tacting through the program function, it is possible to define the block start with the "mark block start" function. The block marking must be concluded by defining a block end. To do so, tact through the program till reaching the desired point and then operate the "mark block end" function. When tacking through the program, the marked block can be recognised by the inverse symbol of the section number.



- Call up the block functions.

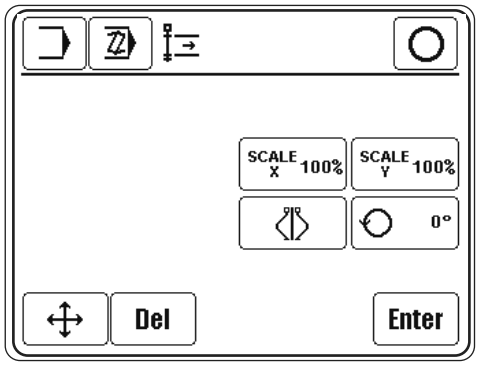

Description of the functions



Conclude input
This function is used to conclude the input, and the machine changes into the sewing mode.

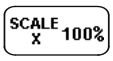

Enlargement factor X-axis
This function is used to enlarge or reduce the block in the X-direction.

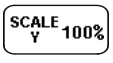

Enlargement factor Y-axis
This function is used to enlarge or reduce the block in the Y-direction.

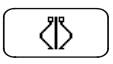

Mirror
This function is used to mirror the block. Mirroring takes place on the straight line, which runs parallel to the Y-axis and through the block start point.

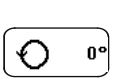

Turn
This function is used to turn the block. The block is turned around the block start point in an anti-clockwise direction.



Shift block

After this function has been selected, a new point must be approached with the clamp drive. With the enter function, this point is taken over and the block shifted.



Delete

When this function is selected, the block is deleted.



Enter

Conclude the block function input and carry out block manipulation.

11.02.02 Image functions

- Switch on the machine.



- Call up the input mode.

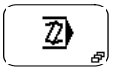

- Call up the seam program input function.



- Call up image functions.

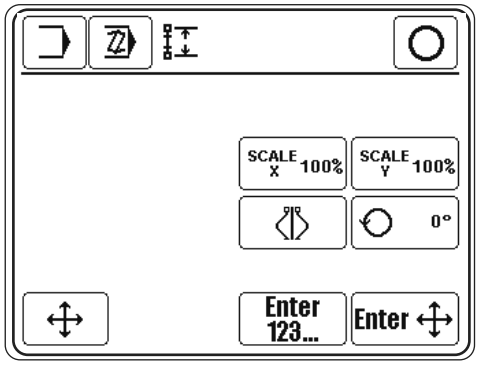

Description of the functions



Conclude input
This function is used to conclude the input, and the machine changes into the sewing mode.

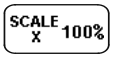

Enlargement factor X-axis
This function is used to enlarge or reduce the image in the X-direction. The operation is concluded by selecting the point of symmetry either with the number keys or with the control keys.

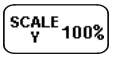

Enlargement factor Y-axis
This function is used to enlarge or reduce the image in the Y-direction. The operation is concluded by selecting the point of symmetry either with the number keys or with the control keys.



Mirror
This function is used to mirror the image. The operation is concluded by selecting the point of symmetry either with the number keys or with the control keys.

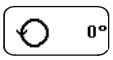

Turn
This function is used to turn the image. The image is turned in an anti-clockwise direction. The operation is concluded by selecting the point of symmetry either with the number keys or with the control keys.



Shift image
After this function has been selected, a new point must be approached with the clamp drive. With the enter function, this point is taken over and the image is shifted from the current position to the end of the program.



Point of symmetry using number keys

The point of symmetry is defined by entering the coordinates with number keys.

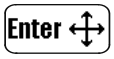

Point of symmetry using control keys

With this function the point of symmetry is approached (entered) by pressing the appropriate direction symbols.

11.02.03 Inserting functions

- Switch on the machine.



- Call up the input mode.

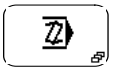

- Call up the seam program input function.



- Call up "insert" functions.

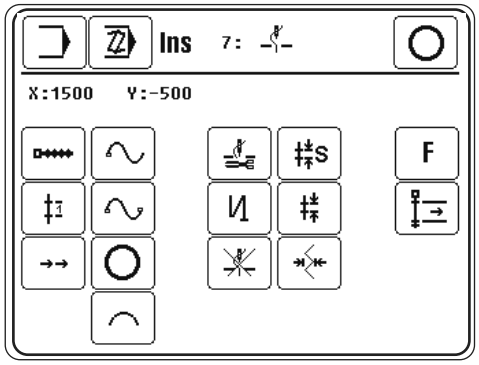

Description of the functions



Conclude input (in status bar)
This function is used to conclude the input, and the machine changes into the sewing mode.



Straight line
A straight line is a direct connection between two points.
To enter a straight line, a stitch length must be defined.



Single stitch
A single stitch or feed motion is entered without taking the stitch length into consideration. The single stitch or feed motion can be max. 6 mm.



Fast motion
The fast motion function is used for the quick motion of the clamp drive. Both axes are moved independently from each other to the end point as quickly as possible. The resulting distance moved is therefore not a straight line (watch out for obstacles on the jig). If the path has to be exact, it is necessary to work with a straight line or curve without start sewing.



Curve check points
It is possible to enter any number of check points. The control unit calculates the course of the curve, taking the stitch length into consideration. Check points do not necessarily have to be end points. A stitch length must be defined. The greater the number of check points entered, the more exact the course of the curve.



Curve end
This function changes a curve check point into a curve end point.



Circle

To enter a circle, three points are necessary. The first point is automatically the starting points. The two missing points still have to be entered. A stitch length must be defined.



Circular arc

For the circular arc the same applies as for the circle, whereby the last point defines the end of the circular arc.



Start sewing

This function is used to start sewing. All following sections are sewn until the thread trimming function is selected.

or



Thread trimming

The thread is cut. The start sewing function must have been activated previously.

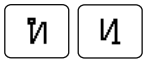

Bartacks

These functions are used to call up the menu for entering start and end bartacks. The menu is used to enter the number of forward and reverse stitches as well as the bartack stitch length.



Sewing off

This function is used to stop the sewing head without thread trimming. The subsequent feed motions are carried out without a sewing function. To restart sewing, the start sewing function must be programmed.



Standard stitch length

This function is used to define the stitch length, which will be used predominantly in the program. During sewing the standard stitch will be displayed in the status bar and can be altered on the machine with the stitch alteration function, without changing into the programming mode.



Stitch length

A stitch length is defined for a certain seam sector.

This stitch length is not displayed in the status bar during sewing and can only be altered in the programming mode.



Stitch width

This function carries out a zig-zag motion with the clamp drive on the base line. Here the stitch length indicates the feed motion along the base line from needle penetration to needle penetration and must be selected accordingly. The stitch width is carried out vertically to the base line. The position of the zig-zag to the base line must also be defined. If the stitch width function is to be switched off, the width must be entered as 0.0.



Other functions

This function is used for the selection of more functions, see Chapter 11.02.04 Other functions.



Insert block

This function is used to insert a marked block after the current position.

11.02.04 Other functions

- Switch on the machine.



- Call up the input mode.

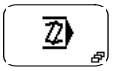

- Call up the seam program input function.



- Call up "insert" functions.



- Call up other functions.

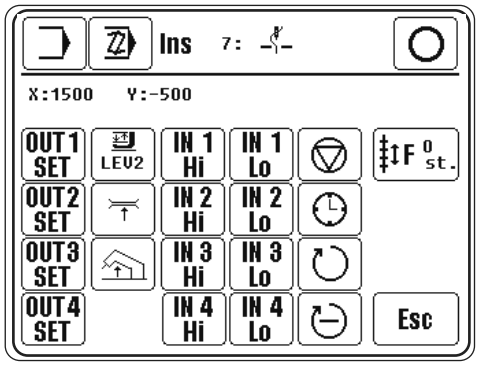

Description of the functions



Conclude input
This function is used to conclude the input, and the machines changes to the sewing mode.



Programmable outputs
The corresponding outputs (1 to 4) are activated with the menu.



Second vibrating presser level
A sector can be entered, in which the 2nd level of the vibrating presser is activated.

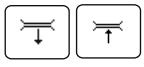

Secondary thread tension (depending on machine status)
This function is used to open or close the secondary thread tension.



Raise sewing head
With this function it is possible to select a sector in which the carriage is moved with raised sewing head.



Wait for input (inputs 1 to 4)
The processing of the program is stopped until the appropriate input (1 to 4) has reached the selected level.



Programmed stop
A stop is programmed in the program.
Processing is continued by calling up the "start" function.



Wait for time

The processing of the program is stopped until the programmed time has elapsed.



Speed

A speed is entered permanently in the program.

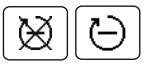

Reduced speed (depending on machine status)

This function is used to sew at a reduced speed or to switch off the reduced speed.



Adjustment parameters

This function is used to adjust the activation or deactivation of various functions. The number of stitches is entered for activating or deactivating the corresponding function sooner or later.



Esc

Conclude input without taking over the inputs.

11.03 An example for programming a seam

Below is an example describing how to enter a seam program.
A seam sketch serves as a model. This is put into the gauge frame and digitised with a needle.

A prerequisite for the use of the seam program is that it matches the clamp.

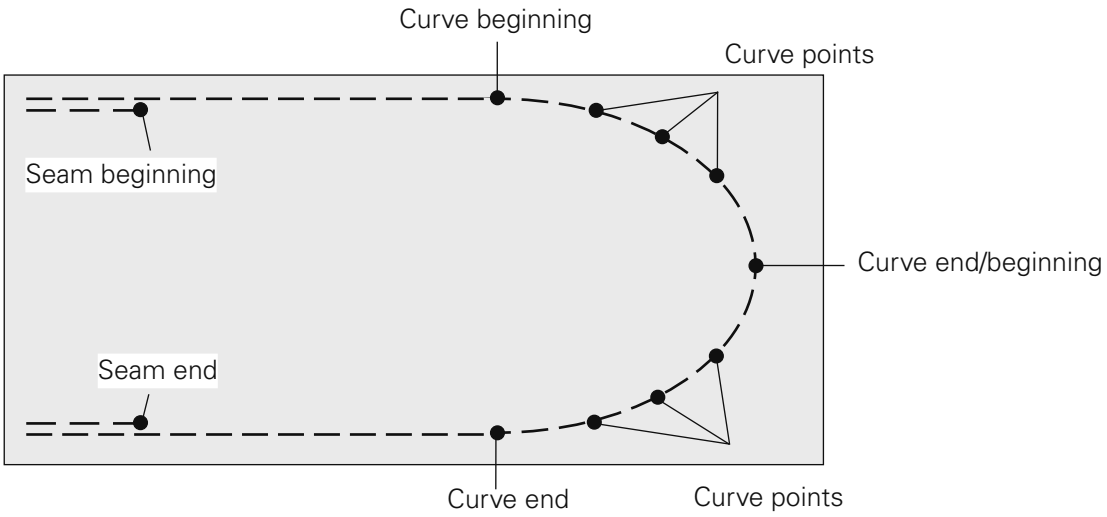

- Switch on the machine.



- Call up the input mode.

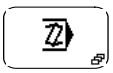

- Call up the seam program input function.
- If necessary, enter appropriate code number.

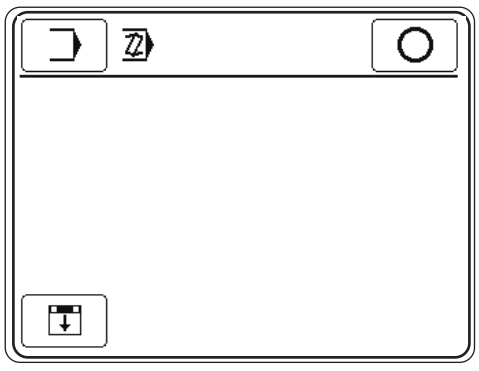

- Insert the clamp.



- Close the clamp indexing function.

Enter

- Confirm the operation.

7 8 9
4 5 6
1 2 3
+/- 0

- Enter desired program number (e.g. "11") to create a new seam program.

Enter

- Confirm program number selection

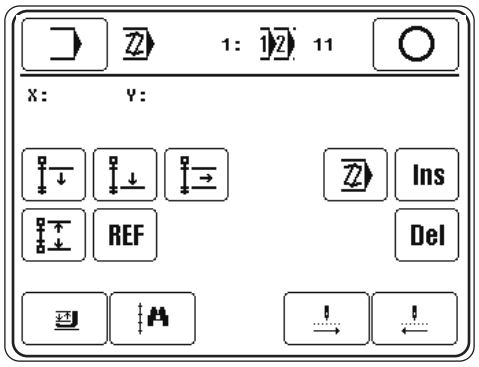

- Tact forwards.

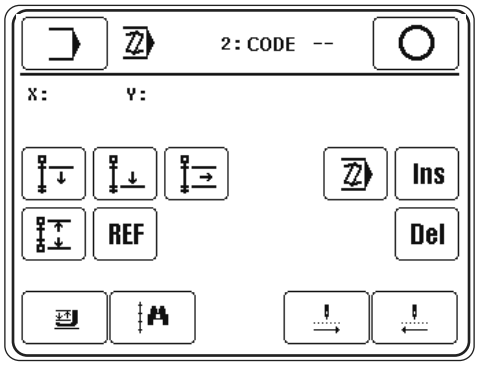

- Call up section editing function.

7 8 9
4 5 6
1 2 3
+/- 0

- Enter clamp code (e.g. "99").

Enter

- Confirm input.

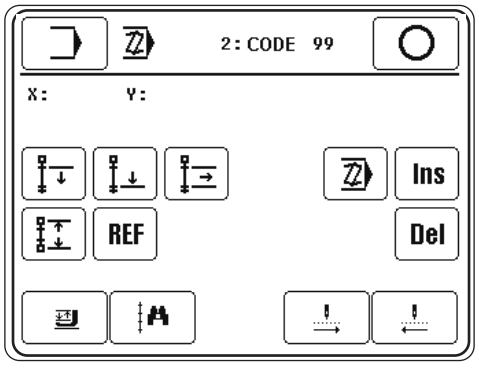



- Tact forwards. The clamp moves to the starting position.

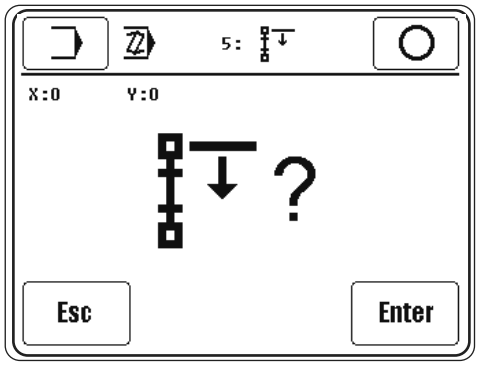

Esc

- Call up the "Esc" function, to change the starting point.

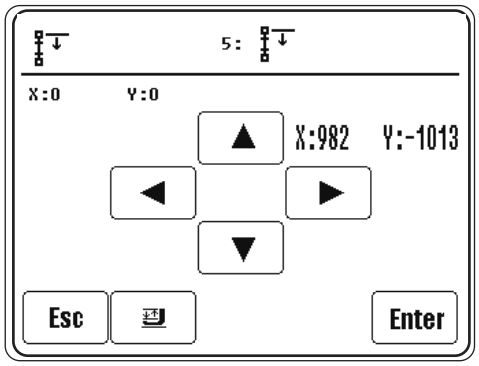

- Move to the starting point with the corresponding direction symbols, and check on the drawing with the needle.

Enter

- Save the setting.

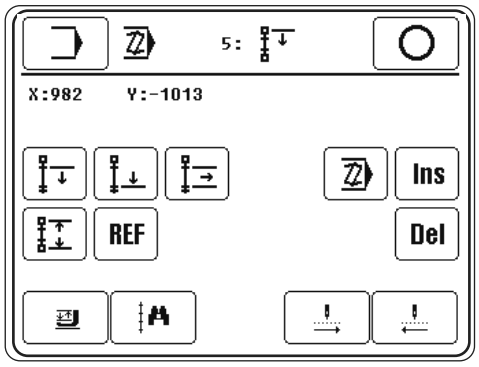

Ins

- Call up the "insert" function.

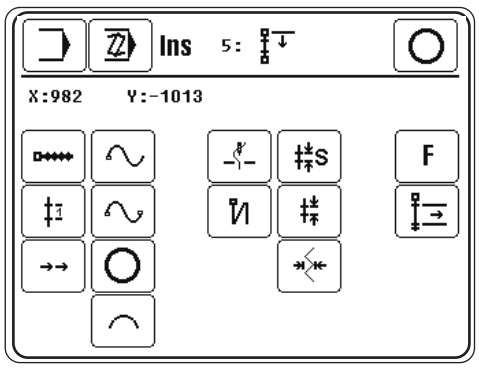



- Call up the "start sewing" function.

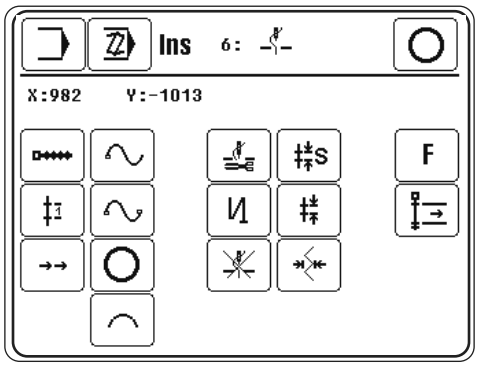



- Call up the "standard stitch length" function.

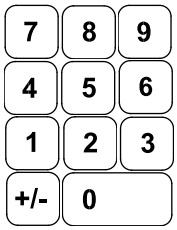

- Enter the value for the standard stitch length, e.g. 3.40 mm.



- Confirm input.

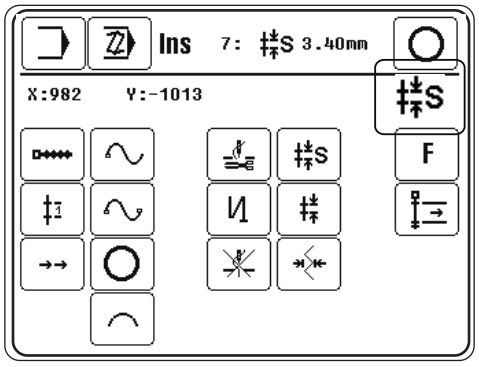



- Call up the "straight line" function to insert a straight line.
- Move to the end point of the straight line with the corresponding direction symbols.



- Save the setting.

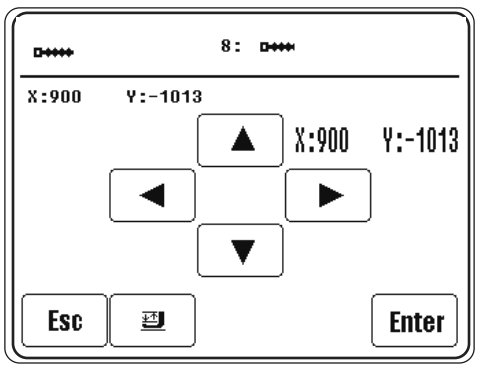

- Move to the next straight line end point with the corresponding direction symbols.



- Save the setting.

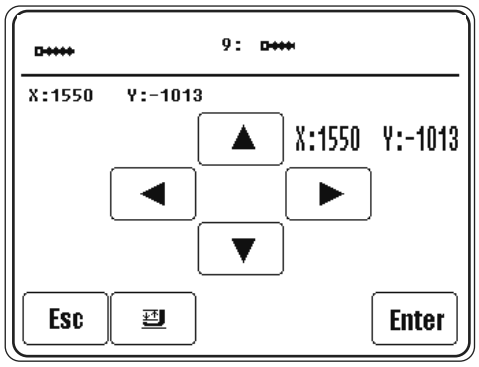

Esc
- Conclude straight line input.

- Call up the "curve point" function.

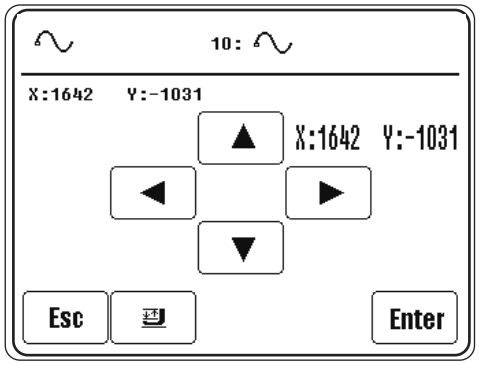

- Move to the first curve point with the corresponding direction symbols.

Enter
- Save the setting.
- Move to the second, third and fourth curve points with the corresponding direction symbols.

Enter
- Save each setting.

Esc
- Conclude curve points input.

- Call up "curve end" function.

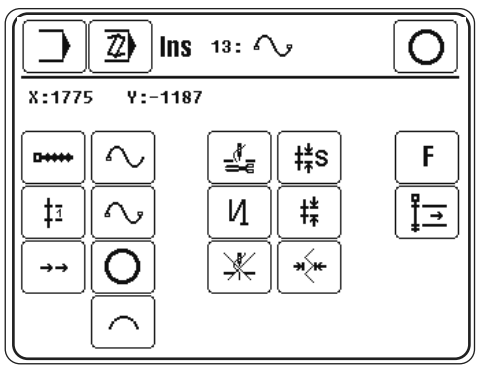

- Call up the "curve point" function.

- Move to the next curve point with the corresponding direction symbols.

Enter

- Save each setting.

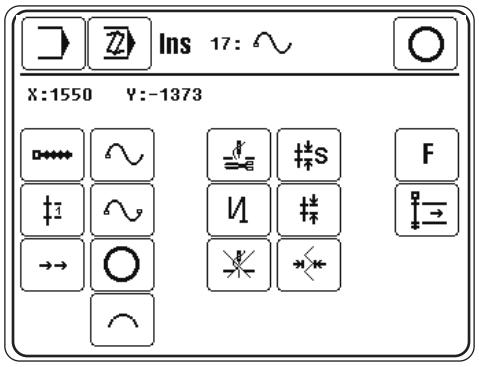

Esc

- Conclude curve points input.

- Call up "curve end" function.

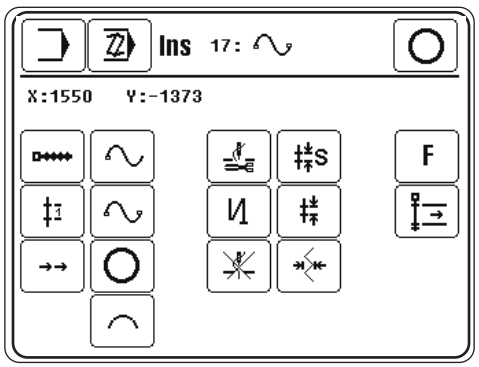

- Call up the "straight line" function to insert a straight line.
- Move to the end points of the straight line with the corresponding direction symbols.

Enter

- Save each setting.

Esc

- Conclude straight line input.

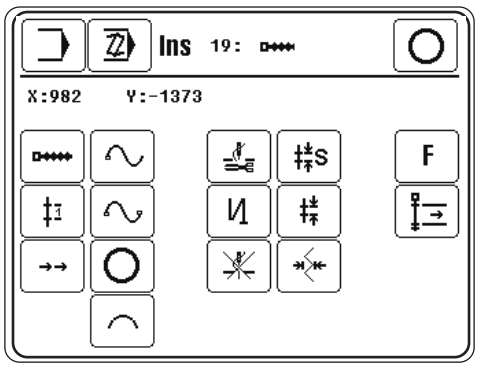

- Switch on the thread trimming function.

- Conclude the seam program input (function in status bar).

To be able to sew with the newly-created or edited seam program, the stitch generation must be carried out. Incomplete or incorrect programs also can be ended with the "Esc" function without stitch generation. In this case, when the seam program is called up in the sewing mode, an appropriate error message will appear.

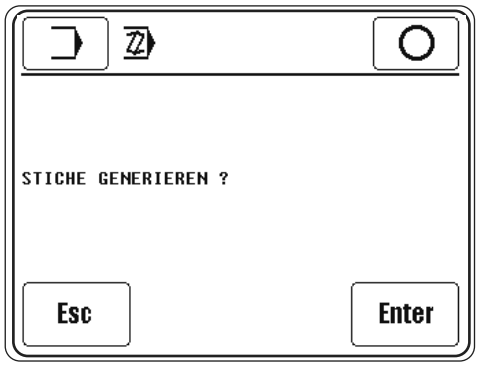

Enter ● Carry out the stitch generation.

● Move to the basic position.

● After entering the appropriate program number, the created seam program can be selected and processed.

To begin with tact through a newly-created or corrected seam program on the machine, to make sure that it matches the clamp!

11.04 Program management

The program management function is used to manage seam programs as well as configuration and machine data. Files can be selected from the machine memory or from a SD-Card and be copied or deleted.

- Switch on the machine.



- Call up the input mode.

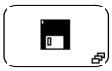

- Call up the program management function.



Both data carriers with the corresponding files appear on the display:
- Machine memory ("C:\DATEN\") is currently selected
- SD-Card ( ) is currently inserted

The data carrier is selected by touching the appropriate box, and the content of the appropriate data carrier is also updated. The selected drive is shown as a invers symbol, the selectet files are shown red.

Seam programs are filed at a different level to that for the configuration and machine data, in order to avoid the configuration and machine data being processed by mistake.

Description of the functions



Input mode
This function is used to changed to the initial state of the input mode.



Update disk drives
This function is used to update (upload)the drives.



Conclude input
This function is used to conclude the input, and the machines changes to the sewing mode.

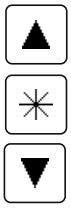

Data selection
With these functions the desired files are marked in the current drive. Individual files are selected with the arrow keys. In combination with the lock key (*) several files can be selected at one time with the arrow keys.



Copy
This function is used to copy the files selected from the current data carrier onto the second data carrier.



Delete
This function is used to delete the selected files.



MDAD/KONF
This function is used to call up the level for the configuration and machine data. The current settings and the machine configuration are stored in the files "MDAT3587" and "KONF3587. BIN". In this way the machine data can be copied on to a CD-Card as a backup, or several machines with the same designation can be configured quickly by reading the machine data.



Format
This function is used to format the CD-Card inserted.



In the course of the formatting operation, all data on the CD-Card is deleted!

11.04 Rights of access

The functions, which can be called up with the control panel, are classified by code numbers and can be protected from unauthorised access. For this purpose, the control unit differentiates between 3 user groups (user 1, 2 and 3), all of which can be assigned a corresponding PIN. If a function is selected, for which the user does not have an authorisation, the user is requested to enter a PIN. After the appropriate PIN has been entered, the selected function is carried out. In addition to the **3** user groups, the control unit also recognises the so-called "super user", who, equipped with a key-switch, has access to all functions and who is authorised to stipulate the rights of access.

- Enter the key-switch and switch on the machine.



- Call up the input mode.

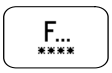

- Call up the menu for entering rights of access.

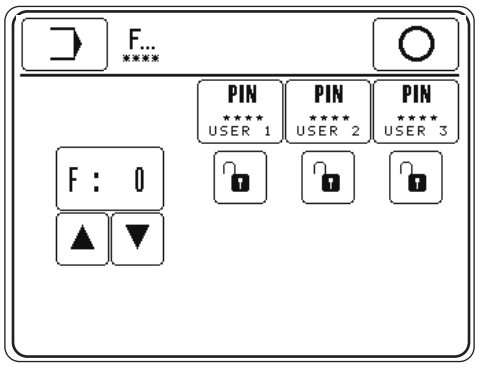

Description of the functions



Input mode
This function is used to change from the initial state to the input mode.



Conclude input
This function is used to conclude the input, and the machines changes to the sewing mode.



Entering the PIN
With this function an individual PIN for each user can be stipulated.

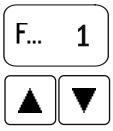

Function selection
These functions are used to select the code number for the function to be locked or released.



Locking/releasing
These functions are used to lock or release the function for the appropriate user.

Allocation of the code numbers

Function	Symbol	Code number	Standard setting		
			User 1	User 2	User 3
Program number selection		0			
Enter stitch length		1			
Enter speed		2			
Input		3			
Create program		4			
Program management		5			
Parameter settings	PAR	6			
Parameter group 100 General settings	-	7			
Parameter group 200 Seam parameters	-	8			
Parameter group 300 Sewing motor positions	-	9			
Parameter group 400 Times	-	10			
Parameter group 500 Meters	-	11			
Info		16			
Reset daily piece counter		17			
Reset bobbin thread stitch counter		18			
Reset operating hours meter		19			
Reset production hours meter		20			
Country settings		21			
Rights of access		22			
Moving stepping motors		25			
Testing carriage	TEST	28			
Sewing motor functions		29			

Function	Symbol	Code number	Standard setting		
			User 1	User 2	User 3
Service		23			
Carry out a cold start		24			
Load software		26			
Set contrast control panel		27			
Set zero points		30			

12 Care and maintenance

12.01 Maintenance intervals

Clean the entire machine	once a week
Clean the hook compartment	several times a day
Check the oil level of the sewing head lubrication unit	daily, before use
Lubricate clamp guides	every 2 months
Lubricate presser foot drive eccentric	every 2 months
Check air pressure	daily, before use
Clean air filter of air filter/lubricator	Clean air filter of air filter/lubricator



During all cleaning work the machine must be disconnected from the power supply by switching off the main switch or pulling out the plug!
Danger of injury if the machine is started accidentally!

12.02 Cleaning the machine

The cleaning cycle required for the machine depends on following factors:

- Single or multi-shift operation
- Amount of dust resulting from the workpiece

It is therefore only possible to stipulate the best possible cleaning instructions for each individual case.

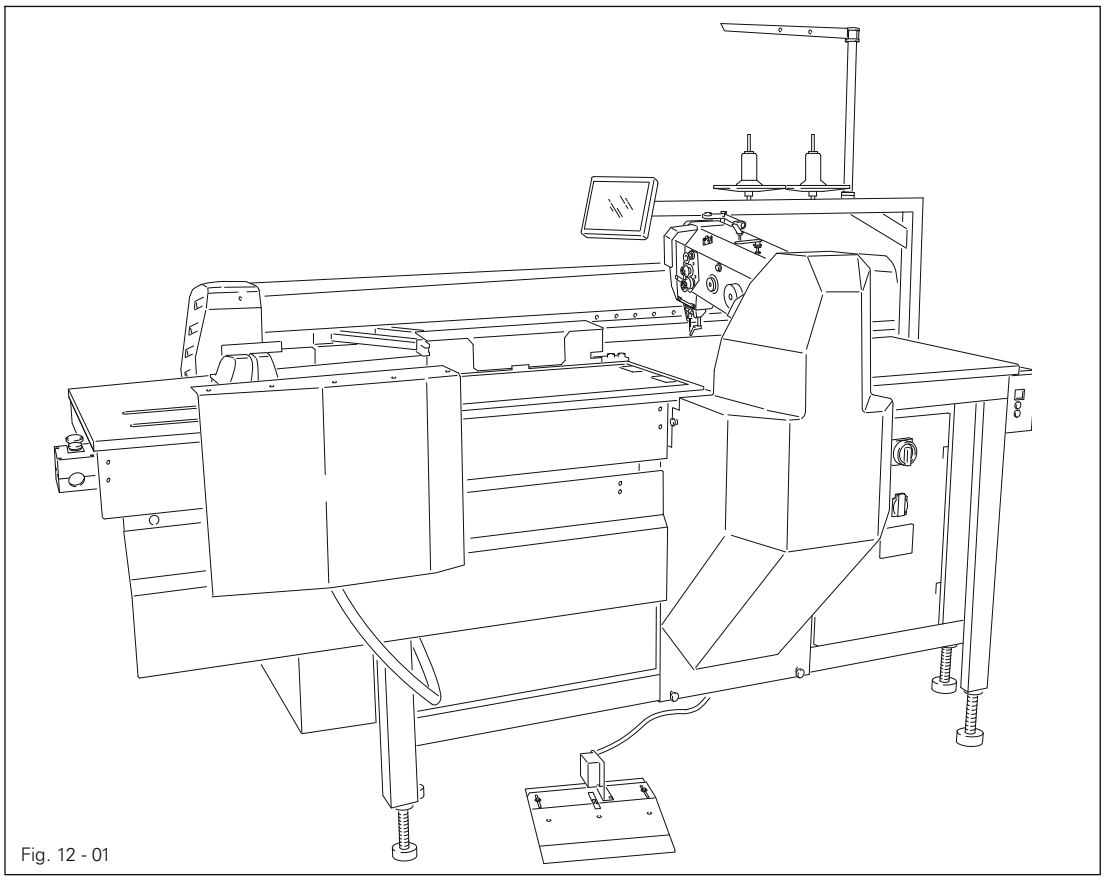

Fig. 12 - 01

To avoid breakdowns, the following cleaning work is recommended for single shift operation:

- Clean hook compartment and needle area of sewing head several times daily.
- Clean the entire machine at least once a week.

To do so:

- Switch on the machine.
- Call up the threading aid function.
- The clamp moves to its basic position, the hook compartment is opened and the sewing starat function is blocked.
- Clean the machine.
- Start the sewing cycle

or

- Move the machine to its basic position.

12.03 Cleaning the hook

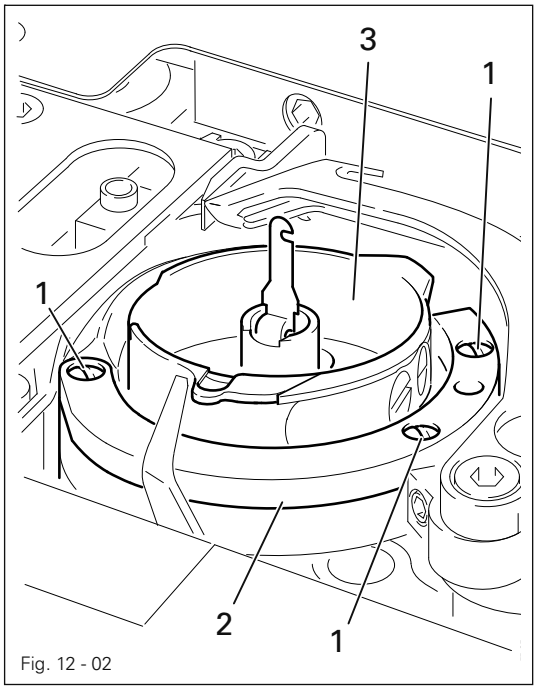

Fig. 12 - 02

- Remove screws 1.
- Remove hook gib 2.
- Turn the balance wheel until the edge of the bobbin case is located vertically below the bobbin opener.
- Remove bobbin case 3.
- Clean hook race.
- Insert bobbin case 3.
- Screw hook gib 2 back into place.

12.04 Clean fan air filter

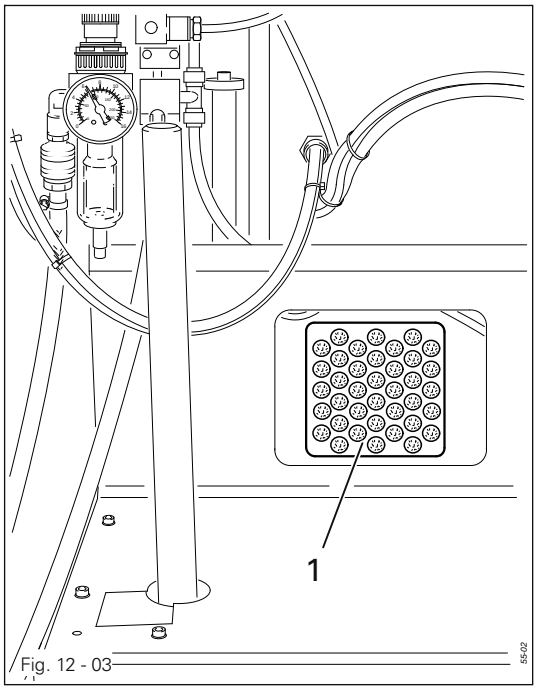

Fig. 12 - 03

- Remove cover 1.
- Remove the filter unit and blast clean with compressed air.
- Insert the clean filter unit and replace cover 1.

12.05 Checking/adjusting the air pressure

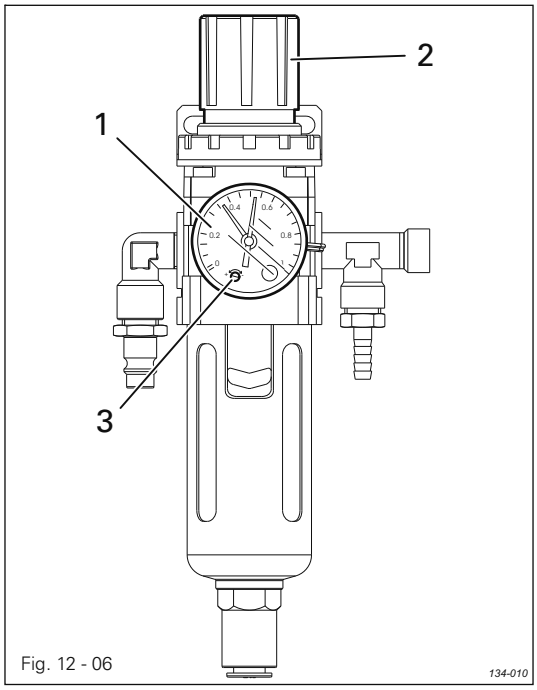

Fig. 12 - 06

- Before operating the machine, always check the air pressure on gauge1.
- Gauge **1** must show a pressure of 6 bar.
- If necessary adjust to this reading.
- To do so, pull knob **2** upwards and turn it so that the gauge shows a pressure of **6** bar.

Configuration of the pressure controller:

- Turn screw **3** until the green arrow points to **4.5** bar.
  The machine is automatically switched off if a pressure of < **4.5** bar is reached, and can be automatically reactivated, once pressure reaches a value > **5.0** bar.

Bar	MPa	psi
4,5	= 0,45	= 65
5	= 0,5	= 73
6	= 0,6	= 87

12.06 Cleaning the air filter of the air-filter/lubricator

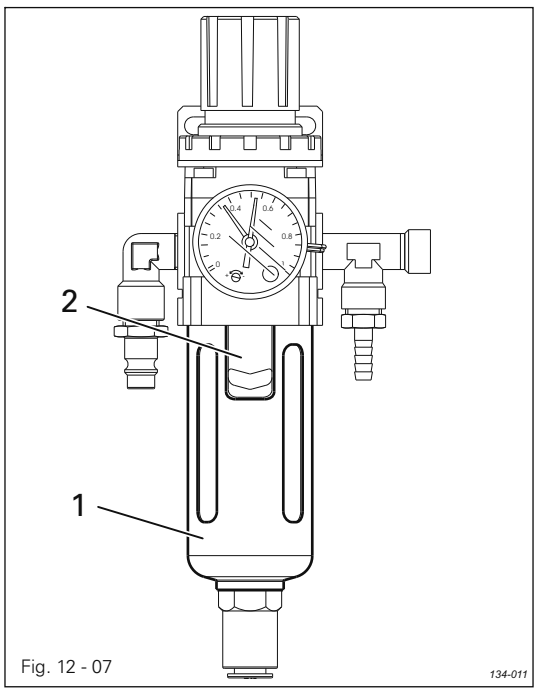

Fig. 12 - 07

Switch the machine off!
Disconnect the air hose at the air-filter/lubricator.

To drain water bowl **1**:

- Water bowl **1** drains itself automatically when the compressed-air hose is disconnected from the air-filter/lubricator.

Cleaning filter **2**:

- Unscrew water bowl **1**.
- Take out filter **2**.
- Clean filter **2** with compressed air or isopropyl alcohol (part No. **95-665 735-91**).
- Screw in filter **2** and screw on water bowl **1**.

12.07 Checking the oil level of the sewing head lubrication

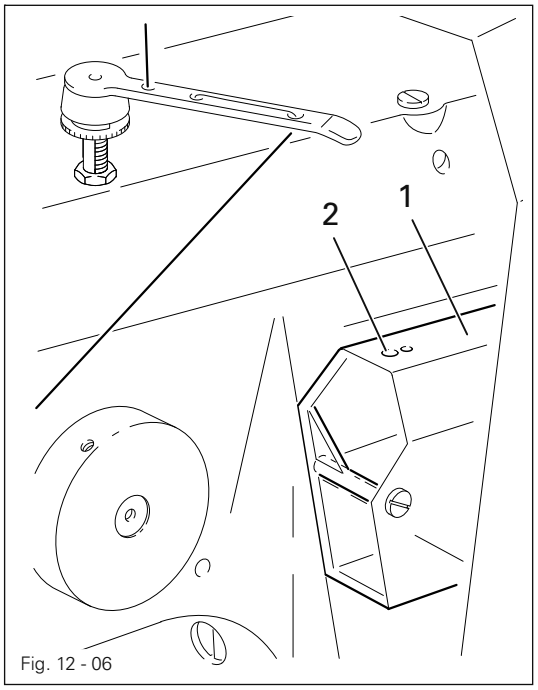

Fig. 12 - 06

- The oil level in drum **1** must be checked daily before use of the machine.
- The oil level must be between the upper and lower markings of drum **1**.
- When necessary, pour oil through hole **2**.

Only use oil with a mean viscosity of **22.0 mm²/s** at **40°C** and a density of **0.865 g/cm³** at **15°C**.

- Before the machine is first operated or whenever the machine has been at a standstill for a longer period of time, also add a few drops of oil to the hook race.

We recommend PFAFF sewing machine oil, part no. **280-1-120 144.**

12.08 Lubricate presser foot drive eccentric

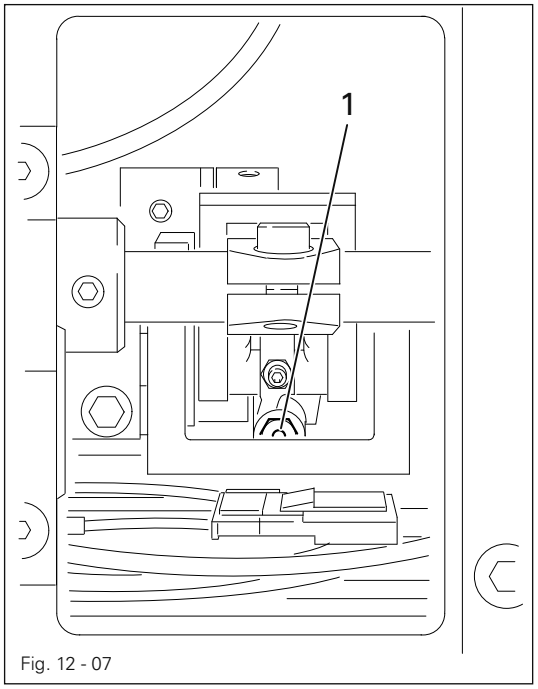

Fig. 12 - 07

Switch off the machine and take precautionary measures to ensure that it is not switched on again! Turn off compressed air!

Only use Isoflex Topas L**32** high-performance grease, part no. **280-1-120 210.**

- Unscrew cover at the rear of the sewing head.
- With lubricating nipple **1**, using a grease gun, lubricate the eccentric every **2** months for single shift operation, and once a month for double shift operation.
- Screw cover back on.

12.09 Lubricate clamp guide

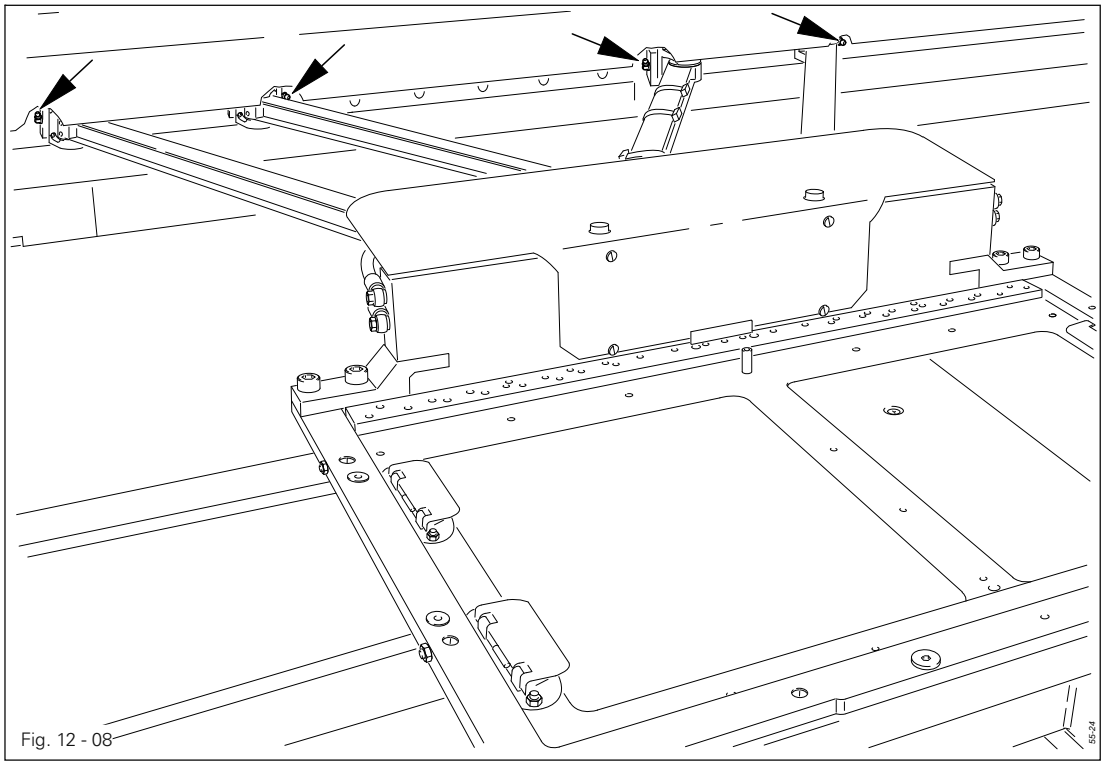

Fig. 12 - 08

Switch off the machine and take measures to prevent it being switched on again!

Only use Isoflex Topas L32 high-performance grease, part no. 280-1-120 210.

- Unscrew the cover of the clamp drive.
- With the appropriate lubricating nipple, using a grease gun, lubricate the guide units every 2 months for single shift operation, and once a month for double shift operation.
- Screw cover back on.

13 Adjustment



Before beginning any adjustment work, take note of the safety regulations found in chapter **1 Safety of this instruction manual**!

13.01 Notes on adjustment

All following adjustments are based on a fully assembled machine and may only be carried out by expert staff trained for this purpose. Machine covers, which have to be removed and replaced to carry out checks and adjustments, are not mentioned in the text. The order of the following chapters corresponds to the most logical work sequence for machines which have to be completely adjusted. If only specific individual work steps are carried out, both the preceding and following chapters must be observed. Screws, nuts indicated in brackets ( ) are fastenings for machine parts, which must be loosened before adjustment and tightened again afterwards.



Unless stated otherwise, during all adjustment work the machine must be disconnected from the electric and pneumatic power supply!
Danger of injury if the machine is started accidentally!

13.02 Tools, gauges and other accessories

- Screwdrivers with blade width from **2** to **10 mm**
- Wrenches (spanners) with jaw width from **6** to **22 mm**
- Allan keys from **1.5** to **6 mm**
- **1** universal screwdriver with interchangeable blades
- **1** metal ruler
- **1** adjustment pin (zero point adjustment)
- 1 adjustment gauge (for adjustments to sewing head), part no. **61-775 913-15**
- 1 adjustment gauge (for adjustments to sewing head), part no. **61-778 162-15**
- **1** adjustment gauge (for adjustments to feed)
- **1** needle rise gauge, part no. **61-111 600-01**
- **1** adjustable clamp, part no. **08-880 137 00**
- **1** adjustment sleeve (foot bar adjustment), part no. **95 778-090-15**
- Sewing thread and test material
- Needles

13.03 Abbreviations

TDC = top dead center
BDC = bottom dead center

13.04 Tilting the sewing head



Turn off the compressed air!

Switch off the machine and take measures to prevent it being switched on again!

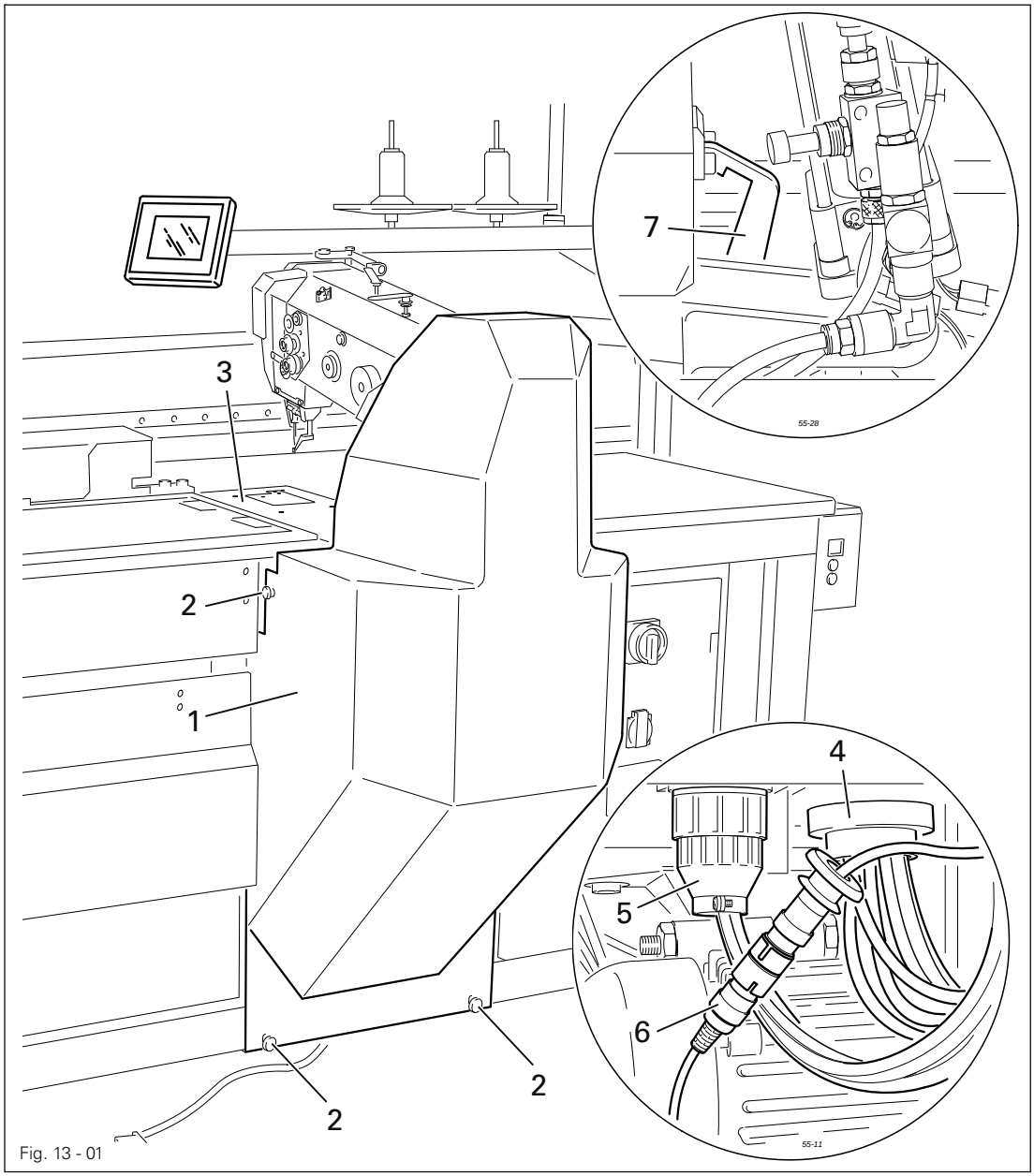

Fig. 13 - 01

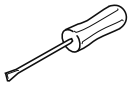

- To tilt the sewing head remove protective cover **1** (screws **2**).
- Detach cover plate **3**.
- Disconnect the pneumatic power supply **4**, electrical power supply **5** and plug **6**.
- Unhinge lock **7** and tilt down sewing head.
- Remove V-belt from pulley on the motor.
- Remove ground cable of machine sewing head.
- Tip back sewing head.
- To replace the sewing head, carry out the above procedure in the reverse order.

13.05 Adjusting the sewing head

13.05.01 Spacing between sewing head and bed plate

Requirement
When the sewing head is lowered, the distance between the lower edge of the shaft **1** and the bed plate should be **132.8 mm**.

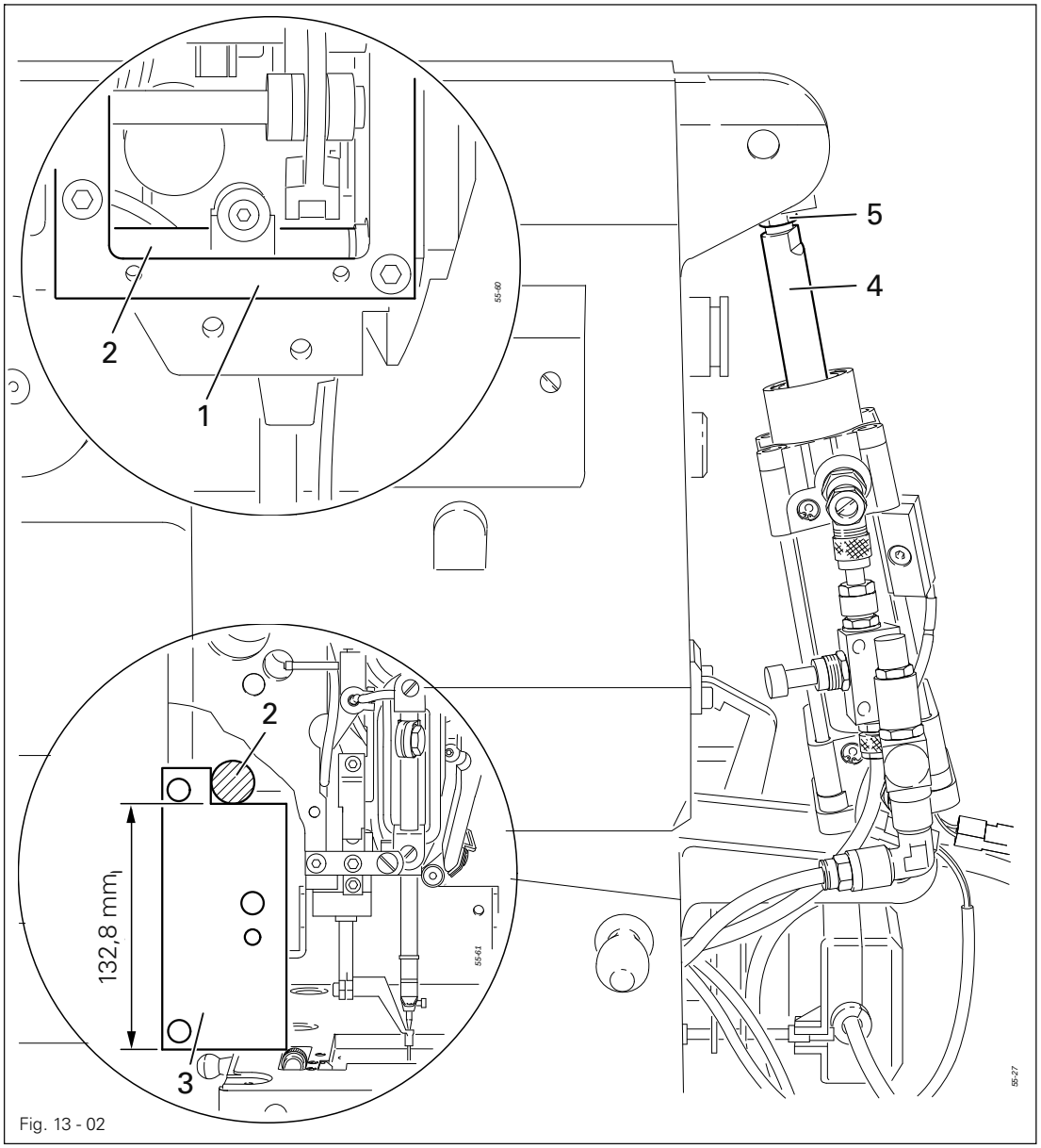

Fig. 13 - 02

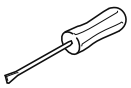

- Remove hook compartment cover.
- Unscrew frame **1**.
- Check distance between shaft **2** and bed plate using adjustment gauge **3** (part no. **61-775 913-15**).
- If necessary adjust plunger **4** (nut **5**) according to the **requirement**.
- Reattach frame **1**.

13.05.02 Position of the sewing head in relation to the bed plate

Requirement
When the sewing head is lowered, the presser bar **4** with adjustment sleeve **3** should slide exactly into the appropriate hole of adjustment gauge **1**.

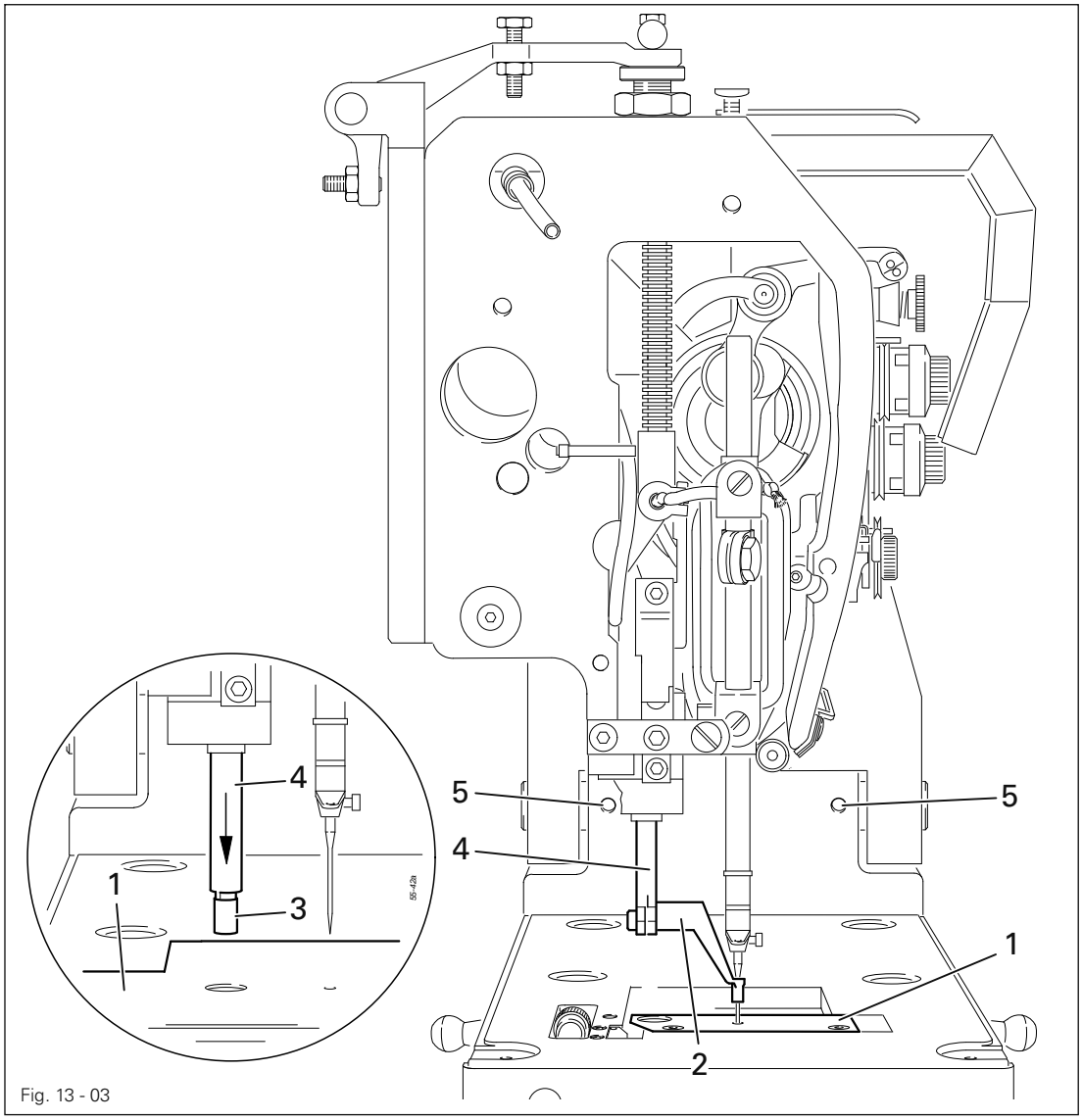

Fig. 13 - 03

- Unscrew needle plate and counter presser.
- Screw on adjustment gauge **1** (**part no. 95-778 162-15**).
- Remove presser foot **2**.
- Fit adjustment sleeve **3** to presser bar **4**.
- Check **requirement** by turning the balance wheel, and if necessary adjust sewing head (screws **5**) according to the **requirement**.

The adjustment gauge **1** remains in place for further adjustments.
The exact setting of the presser bar **4** is described in Chapter **13.05.21 Presser foot height.**

13.05.03 Upper and lower toothed belt guards

Requirement
The upper and lower toothed belt guards must be positioned as close as possible over the toothed belt sprockets without touching them.

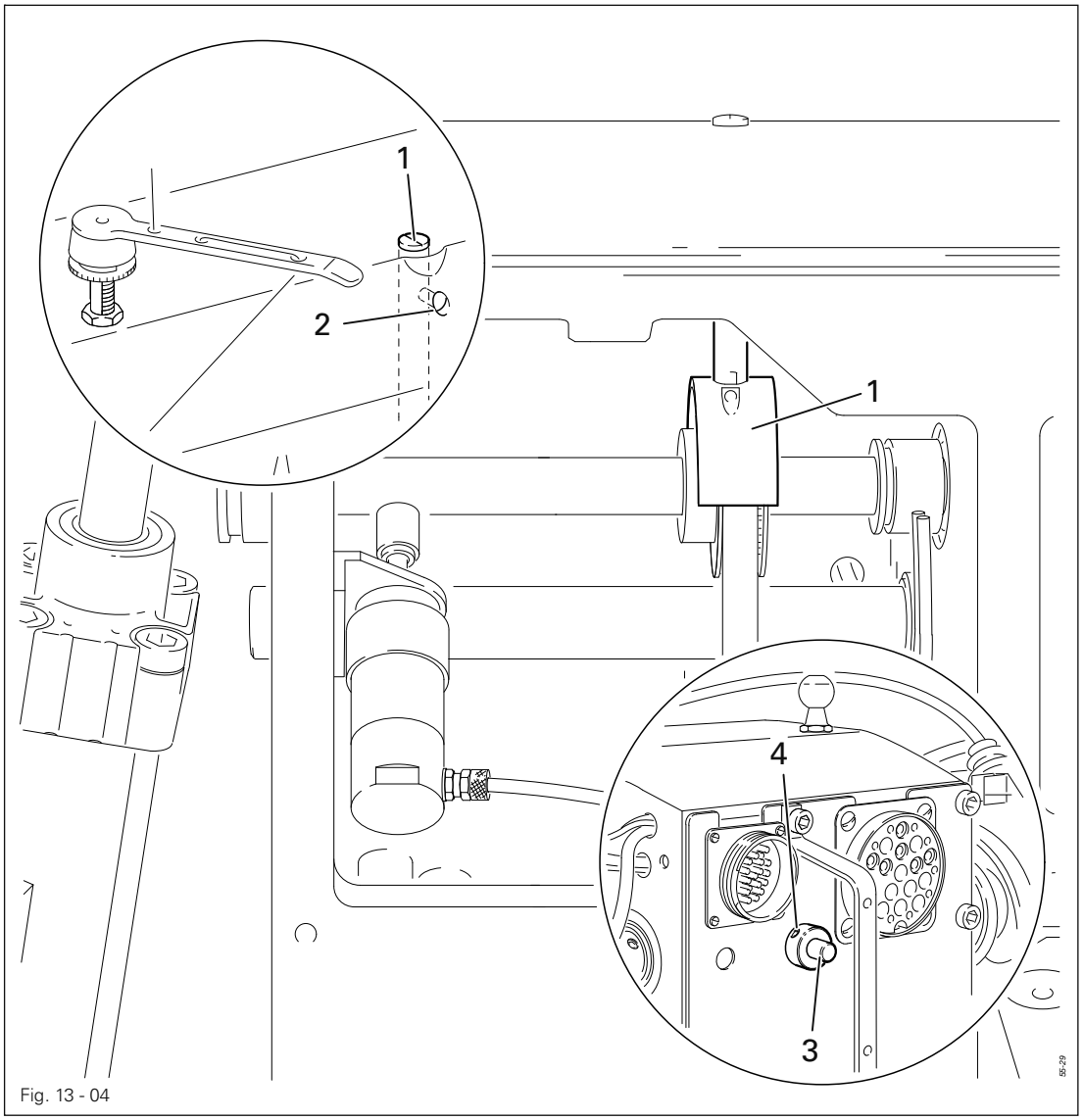

Fig. 13 - 04

- Move the upper **1** (screw **2**) and lower toothed belt guards **3** (screws **4**) at the underside of the sewing head according to the **requirement**.

Carry out the adjustment carefully!
Otherwise, when the sewing head is raised up, the toothed belt could disengage!

13.05.04 Counterweight

Requirement
In needle bar position BDC the largest eccentricity of the counterweight **1** must be at the top.

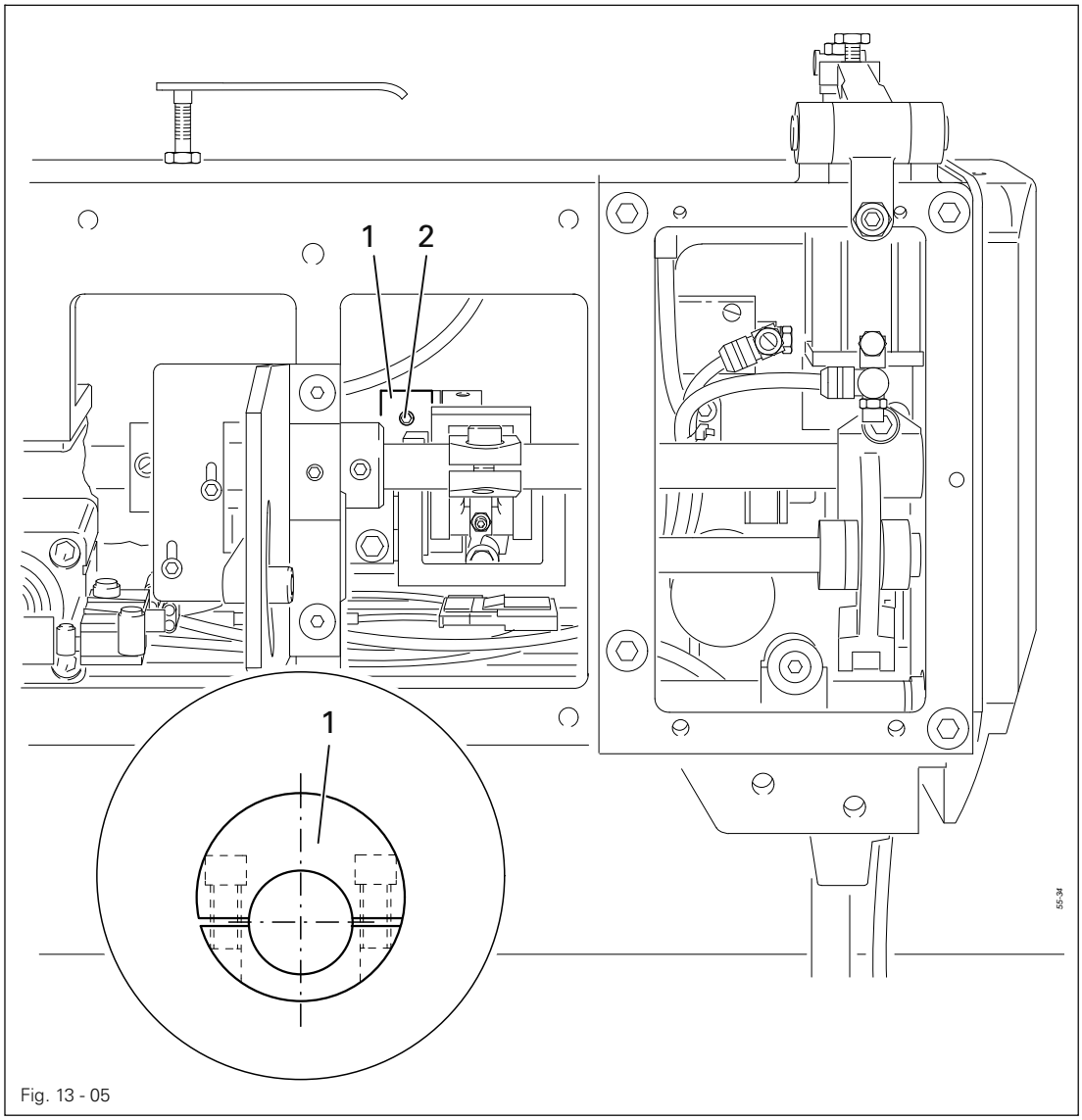

Fig. 13 - 05

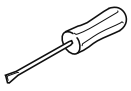

- Move needle bar to BDC.
- Turn counterweight **1** (screws **2**) according to the **requirement**.

13.05.05 Preadjusting the needle height

Requirement
At needle bar position TDC, the distance between the needle point and the adjustment gauge must be approx. **22 mm**.

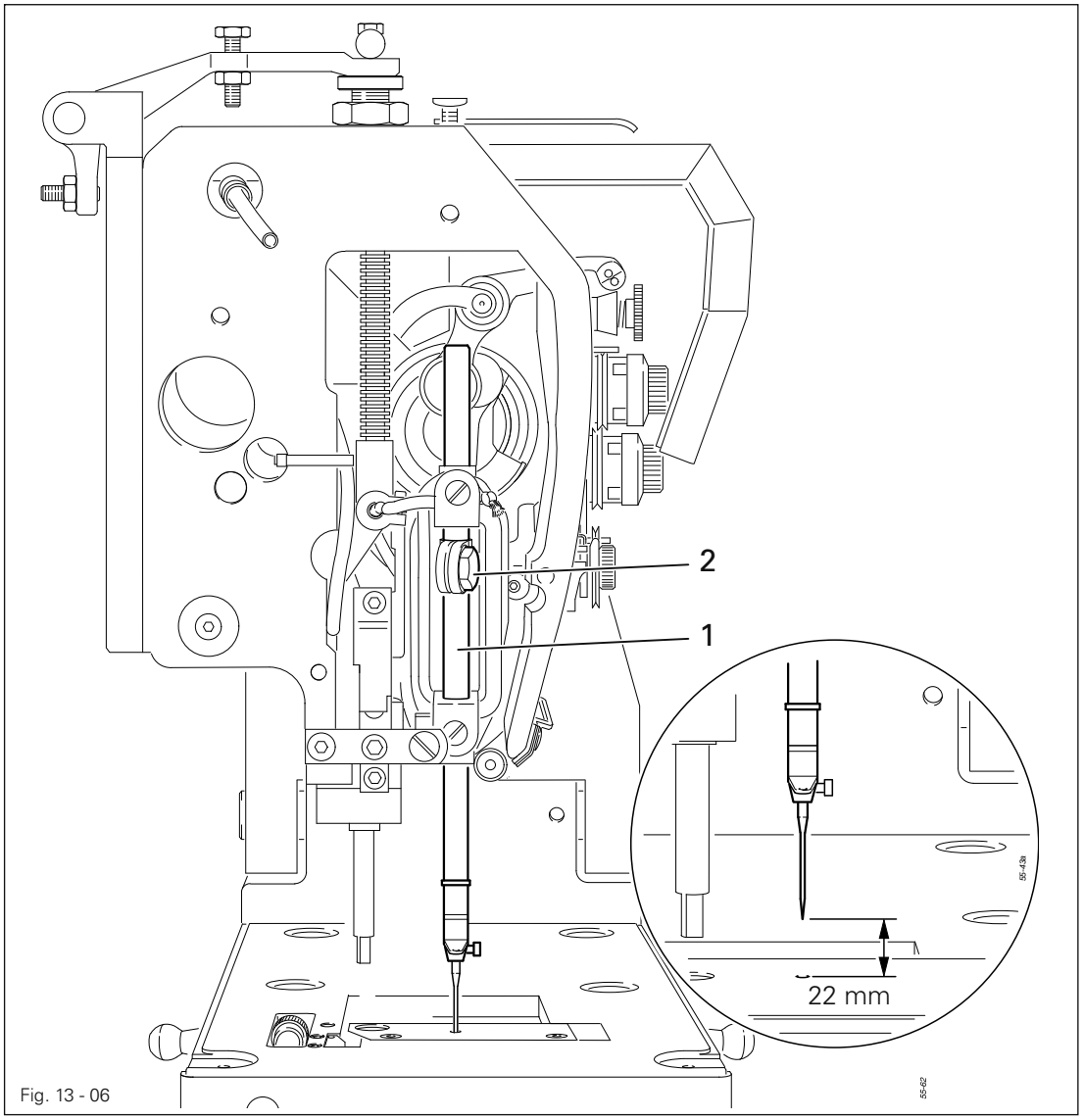

Fig. 13 - 06

- Move needle bar **1** (screws **2**) without twisting it according to the **requirement**.

13.05.06 Centering the needle in the needle hole

Requirement
The adjustment pin **1** must fit precisely into the corresponding adjustment hole of the adjustment gauge **6**.

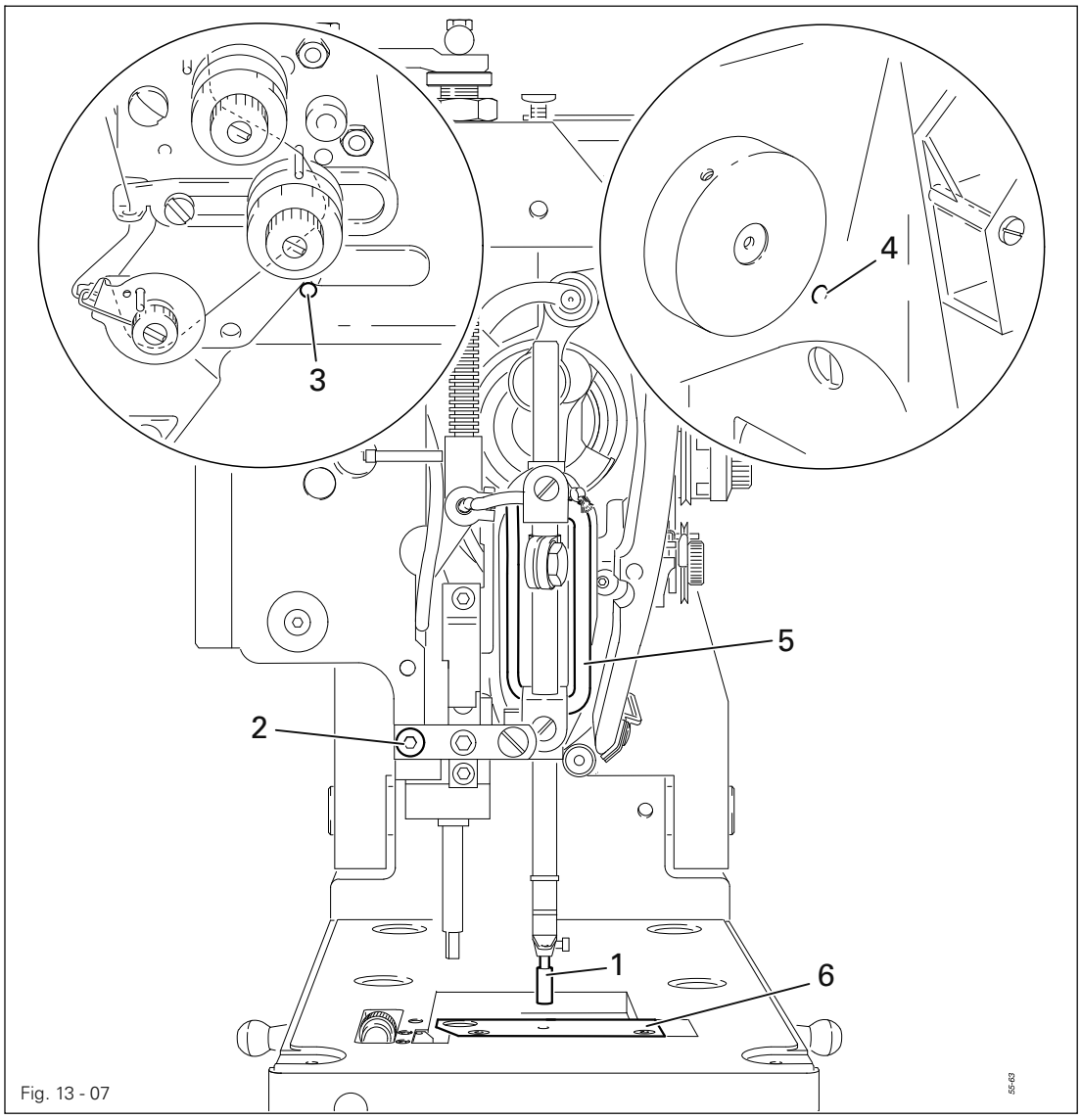

Fig. 13 - 07

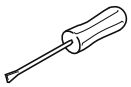

- Insert adjustment pin **1** into the needle bar and screw tight.
- Loosen screws **2**, **3** and **4**.
- Move needle bar frame **5** according to the **requirement**.
- Tighten screws **2**, **3** and **4**.
- Unscrew adjustment gauge **6** and adjustment pin **1**.

13.05.07 Needle rise, needle height, hook clearance and needle guard

Requirement

With the needle bar in position **2.2 mm** after b.d.c. (needle rise)

1. The top edge of the needle eye should be **1.0 mm** below the tip of the hook,
2. The hook tip should be **0.05 – 0.1 mm** from the needle and point at needle centre and
3. Needle guard **5** should touch the needle lightly.

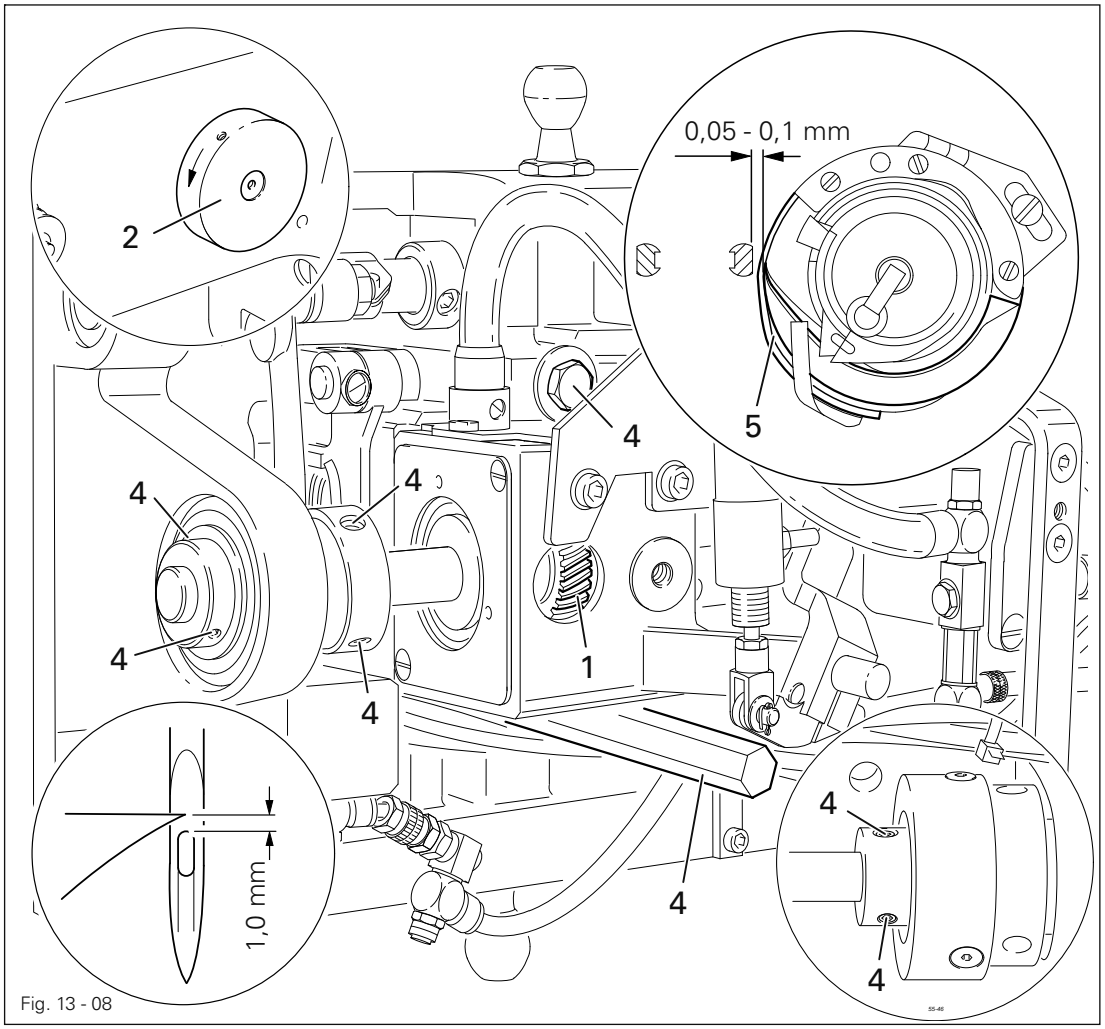

Fig. 13 - 08

Needle rise

- Loosen screws of the bevel gear **1**.
- Bring needle bar to b.d.c.
- In this position, push the **2.2 mm** thick feeler gauge of the needle rise gauge directly under the needle bar bearing.
- Position adjustable clamp (part no. **08-880 137 00**) on feeler gauge and screw it to the needle bar.
- Remove feeler gauge and turn balance wheel **2** in the direction of the arrow, until the adjustable clamp is in position.
- Point hook tip towards needle centre and tighten the screws of bevel gear **1**, taking the backlash into consideration.

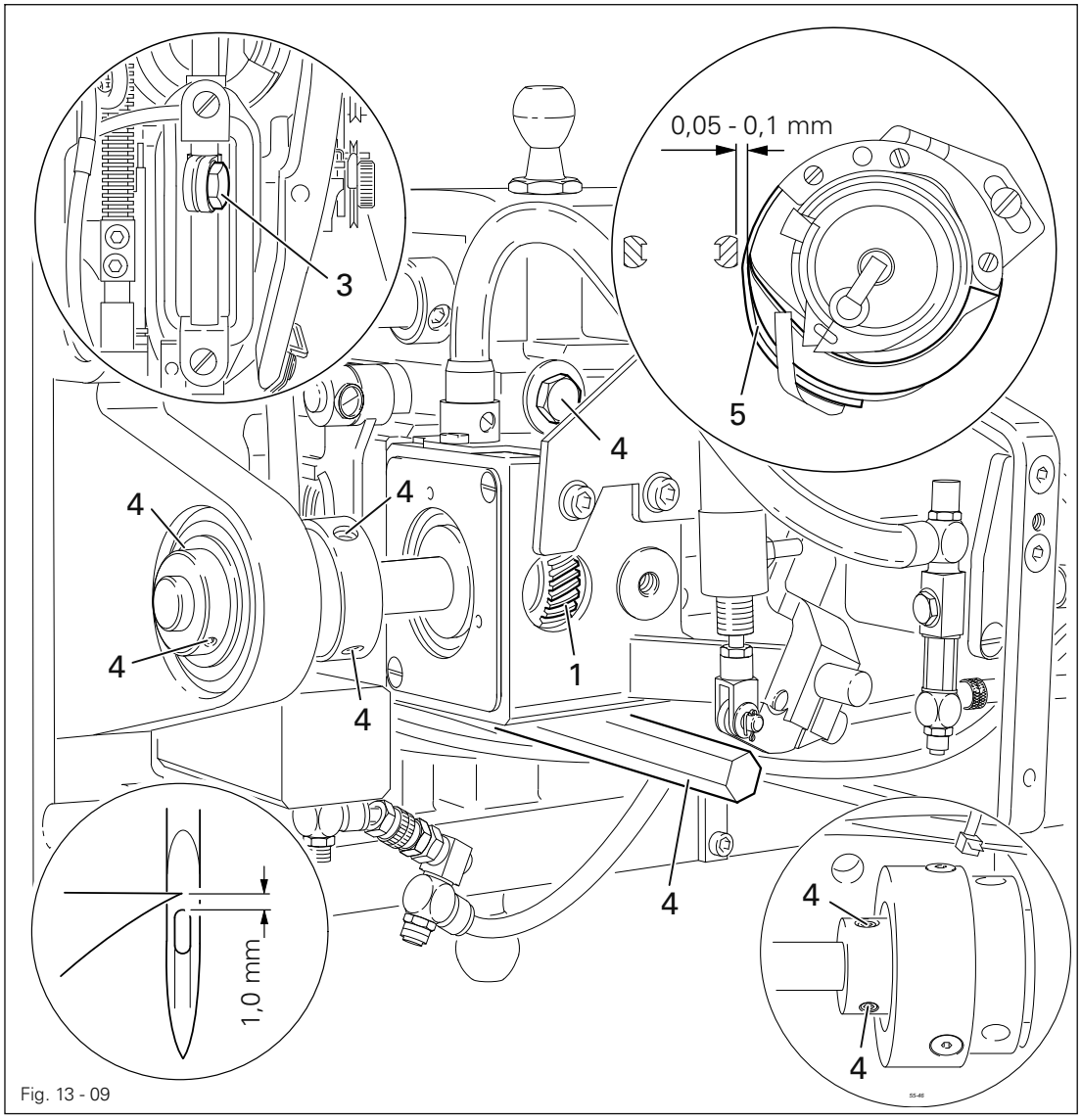

Fig. 13 - 09

Needle height

- Without twisting it adjust needle bar (screw **3**) according to **requirement 1**.

Hook-to-needle clearance

- Adjust hook bearing (screws **4**) according to **requirement 2**, taking care that the needle is not deflected by needle guard **5**.
- Check the movement of the feed lifting eccentric.

Needle guard

- By turning balance wheel **2**, bring the needle bar into needle rise position.
- Align needle guard **5** according to **requirement 3**.

13.05.08 Bobbin-case opener stroke

Requirement
When the bobbin-case opener is at its foremost position, the catch **3** of the bobbin-case should be far enough away from the edge of the needle plate opening **4** to allow the thread to pass through without difficulty.

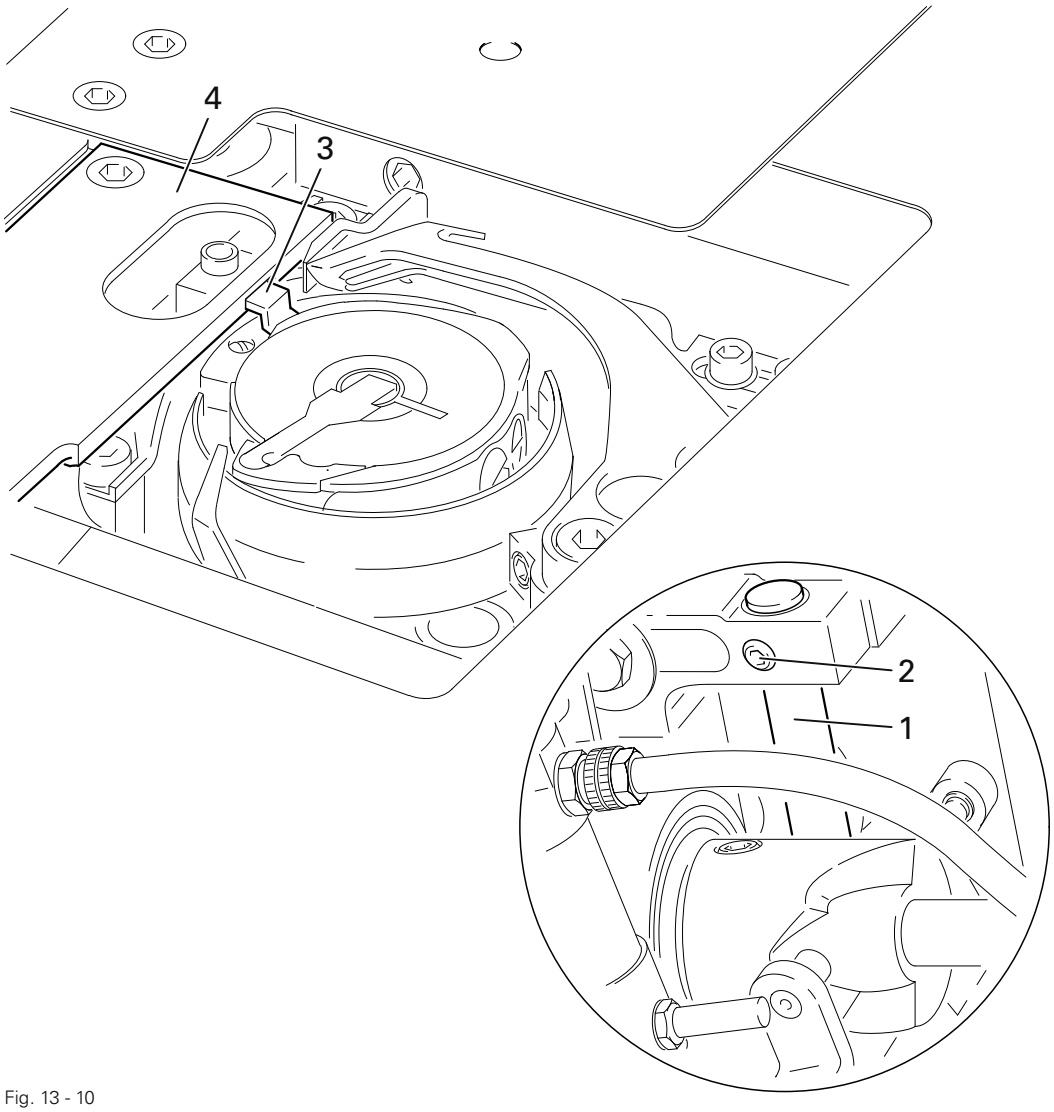

Fig. 13 - 10

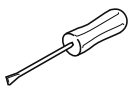

- Adjust shaft **1** (screw **2**) according to the **requirement**.

13.05.09 Counter presser lifting stroke

Requirement
With the needle bar at b.d.c., the counter presser **3** should be at the top of its stroke.

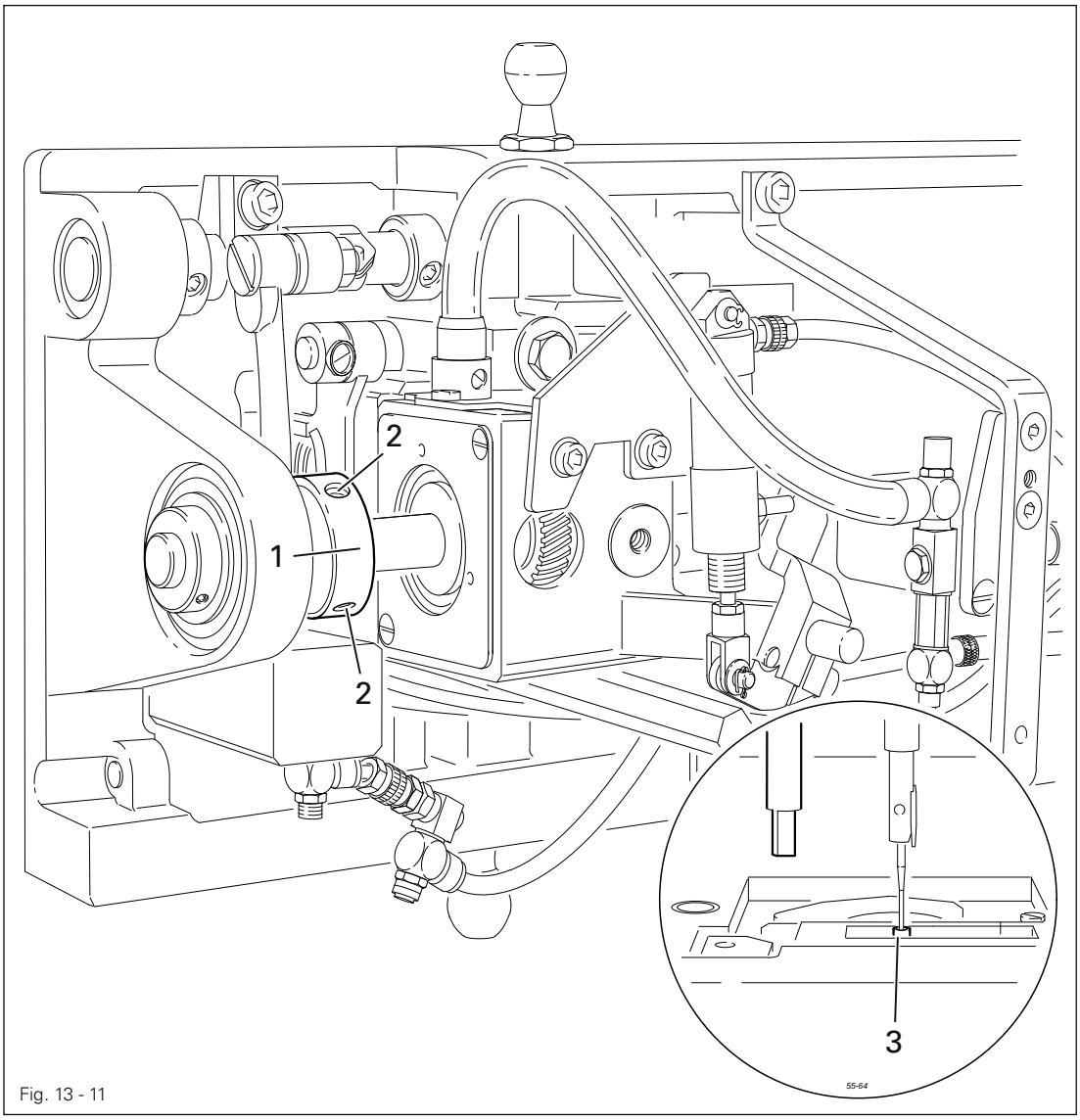

Fig. 13 - 11

- Bring the needle bar to b.d.c.
- Adjust eccentric **1** (screws **2**) according to the **requirement**.

13.05.10 Counter presser height

Requirement

Long counter presser (Order No. 91-059 979-04)

1. When the needle bar is at b.d.c., the top edge of the long counter presser **6** should be **2 mm** above the closed hook compartment cover **1**.
   When the needle bar is at t.d.c., the top edge of the counter presser **6** must not be above the hook compartment cover **1**.

Short counter presser (Order No. 91-059 878-04)

2. When the needle bar is at b.d.c., the short counter presser **7** should be flush with the top edge of the hook compartment cover **1**.

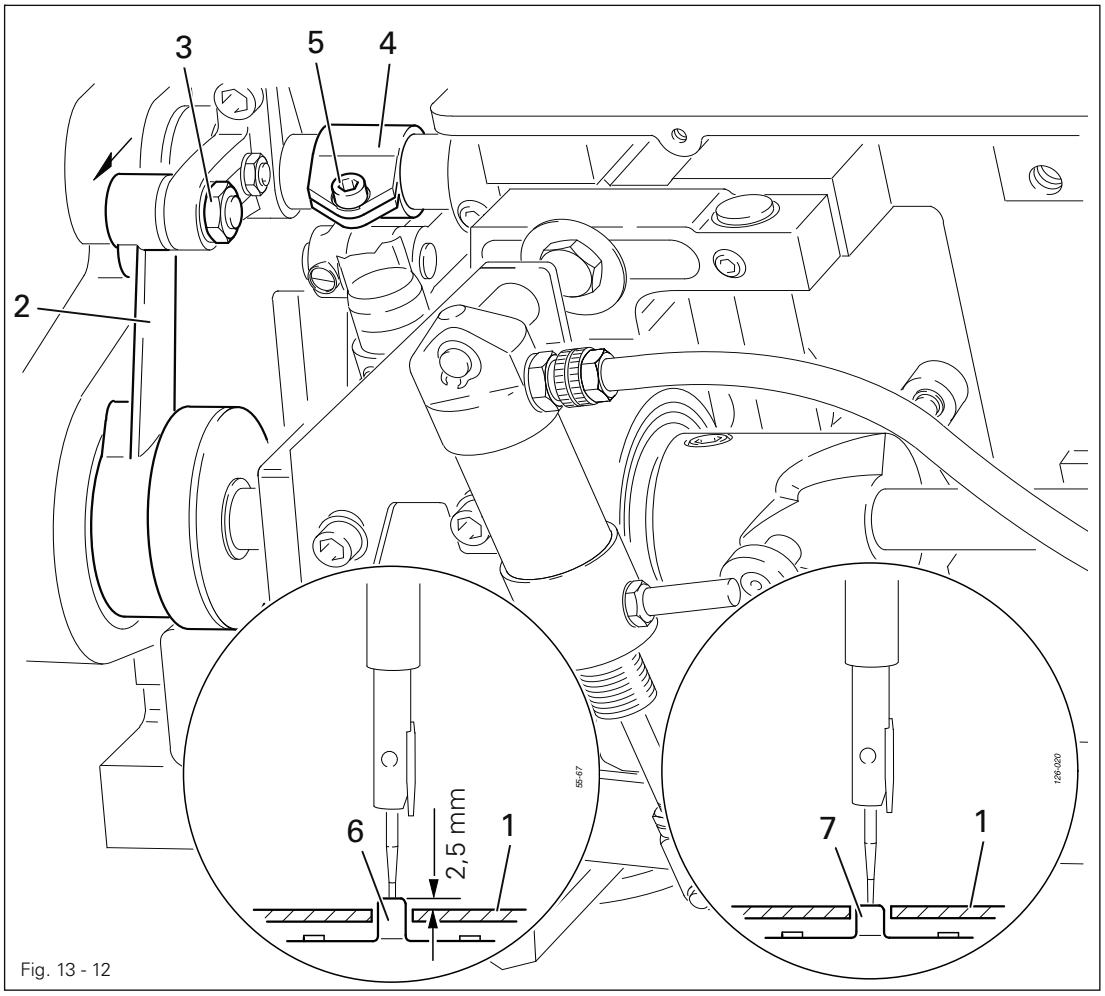

Fig. 13 - 12

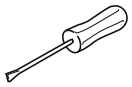

- Fit hook compartment cover **1**.
- When using the long counter presser (Order No. **91-059 979-04**), move lever **2** (nut **3**) up as far as possible in the opposite direction shown by the arrow.
- Adjust holder **4** (screw **5**), so that when the needle bar is at t.d.c., the counter presser **6** is flush with the top edge of the hook compartment cover **3** (**Requirement 1**).
- When using the short counter presser (Order No. **91-059 878-04**), move lever **2** (nut **3**) down as far as possible in the direction shown by the arrow (**Requirement** 2).

13.05.11 Counter presser position

Requirement
The needle should enter the needle hole in the centre of the counter presser **1**.

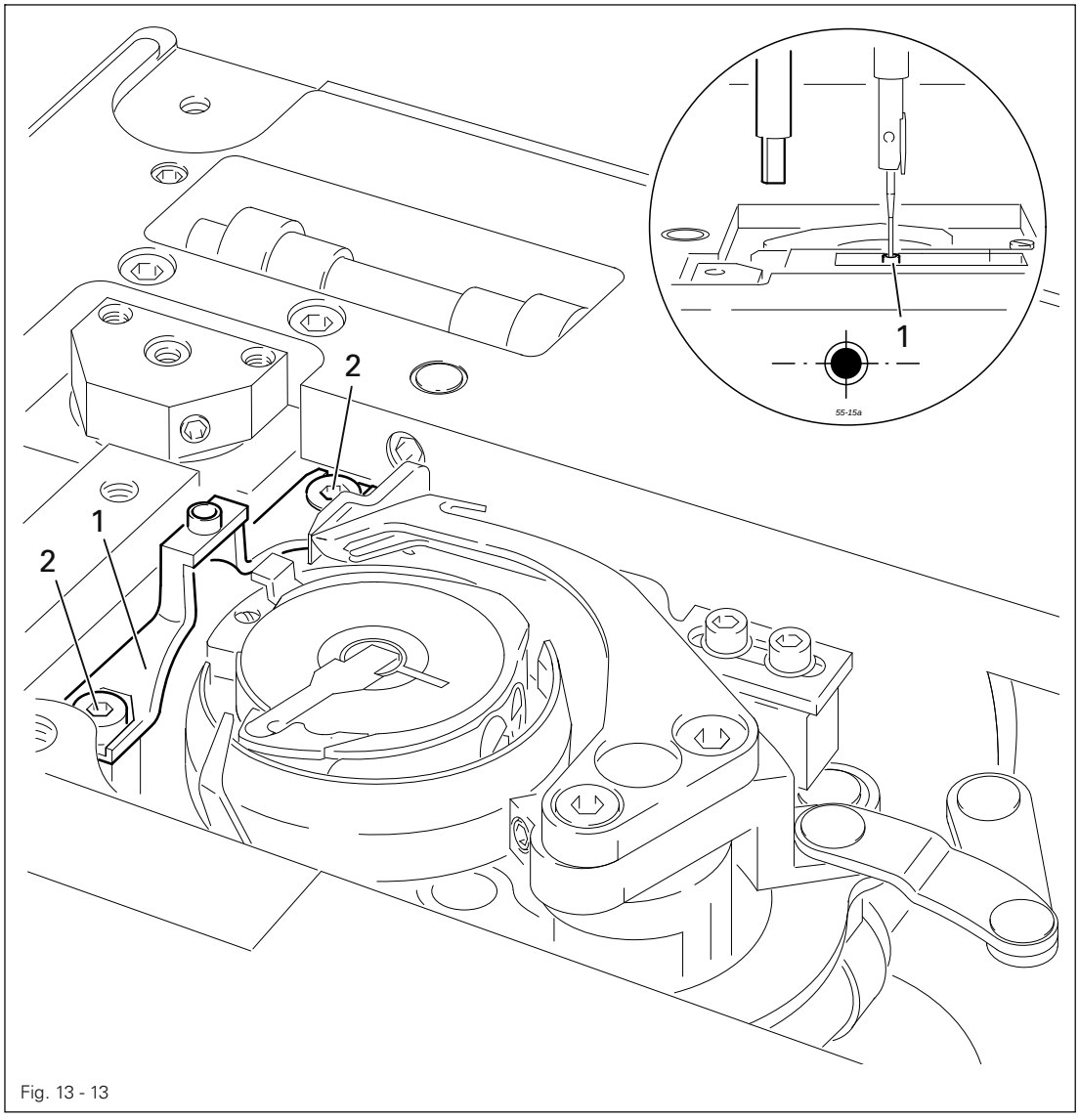

Fig. 13 - 13

- Adjust counter presser **1** (screws **2**) according to the **requirement**.

13.05.12 Resting position of the roller lever / radial position of the control cam

Requirement

1. When the plunger **1** is retracted, there must be a distance of **0.1 mm** between the outer edge of the control cam **6** and the roller of the roller lever **5**.
2. When the thread trimmer is switched on beforehand, the control cam **6** must have just brought the roller lever **5**, in TDC take-up lever, to its resting position.

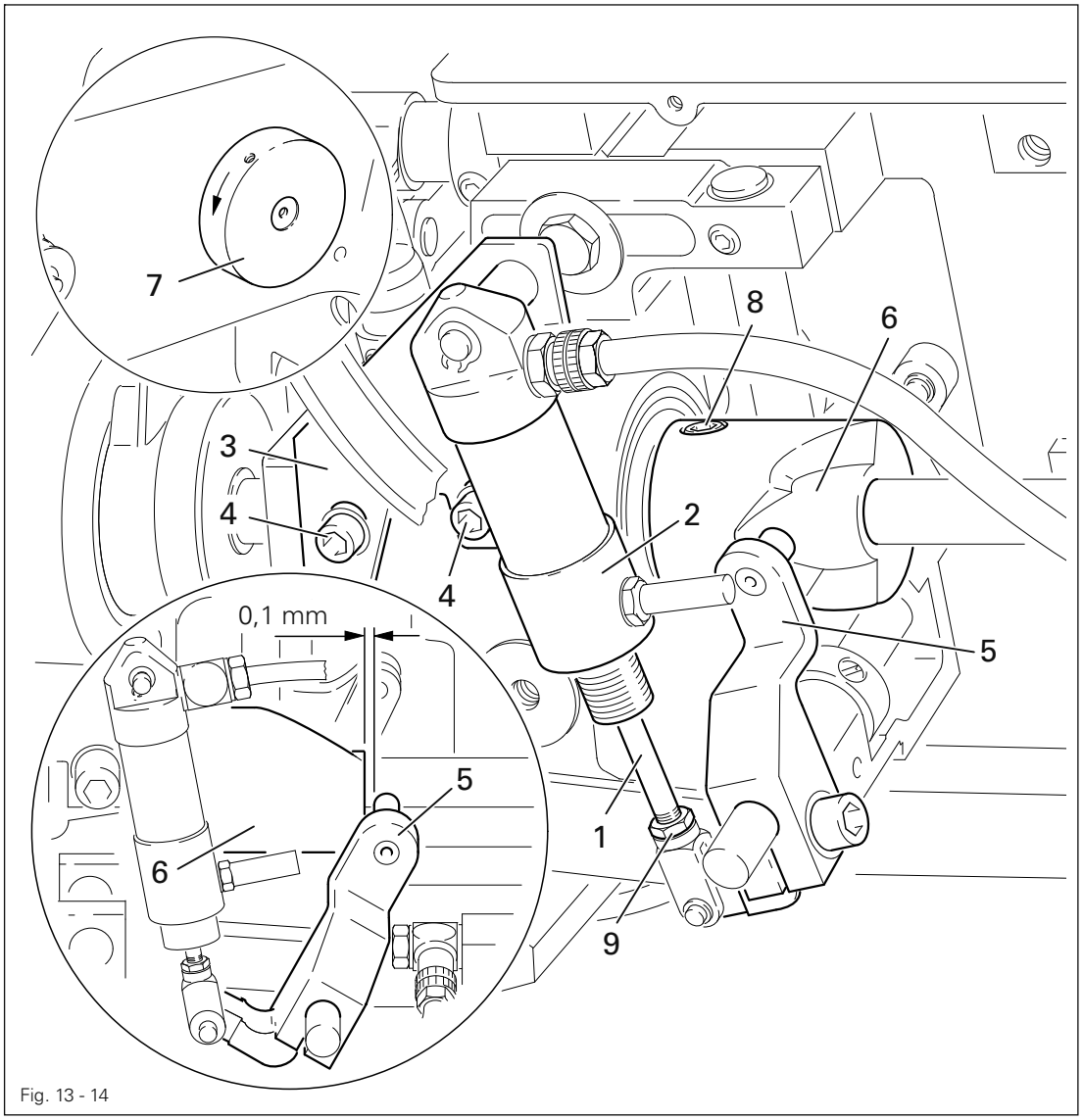

Fig. 13 - 14

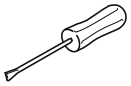

- Retract the plunger **1** in cylinder **2** until it stops.
- Move the cylinder carrier **3** (screws **4**) according to **requirement 1**.
- Bring the take-up lever to BDC and push the roller lever **5** into the control cam **6** by hand.
- By turning the handwheel **7** in the direction of the arrow, bring the take-up lever to TDC and check **requirement 2**.
- If required, turn the control cam **6** (screws **8**) according to **requirement 2**.

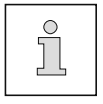

On plunger **1**, the thread should be approx. **1 mm** above the lock nut **9**.

13.05.13 Thread catcher height

Requirement
The lower edge of the thread catcher **3** must be positioned at a distance of **0.8 mm** above the bobbin case **4**.

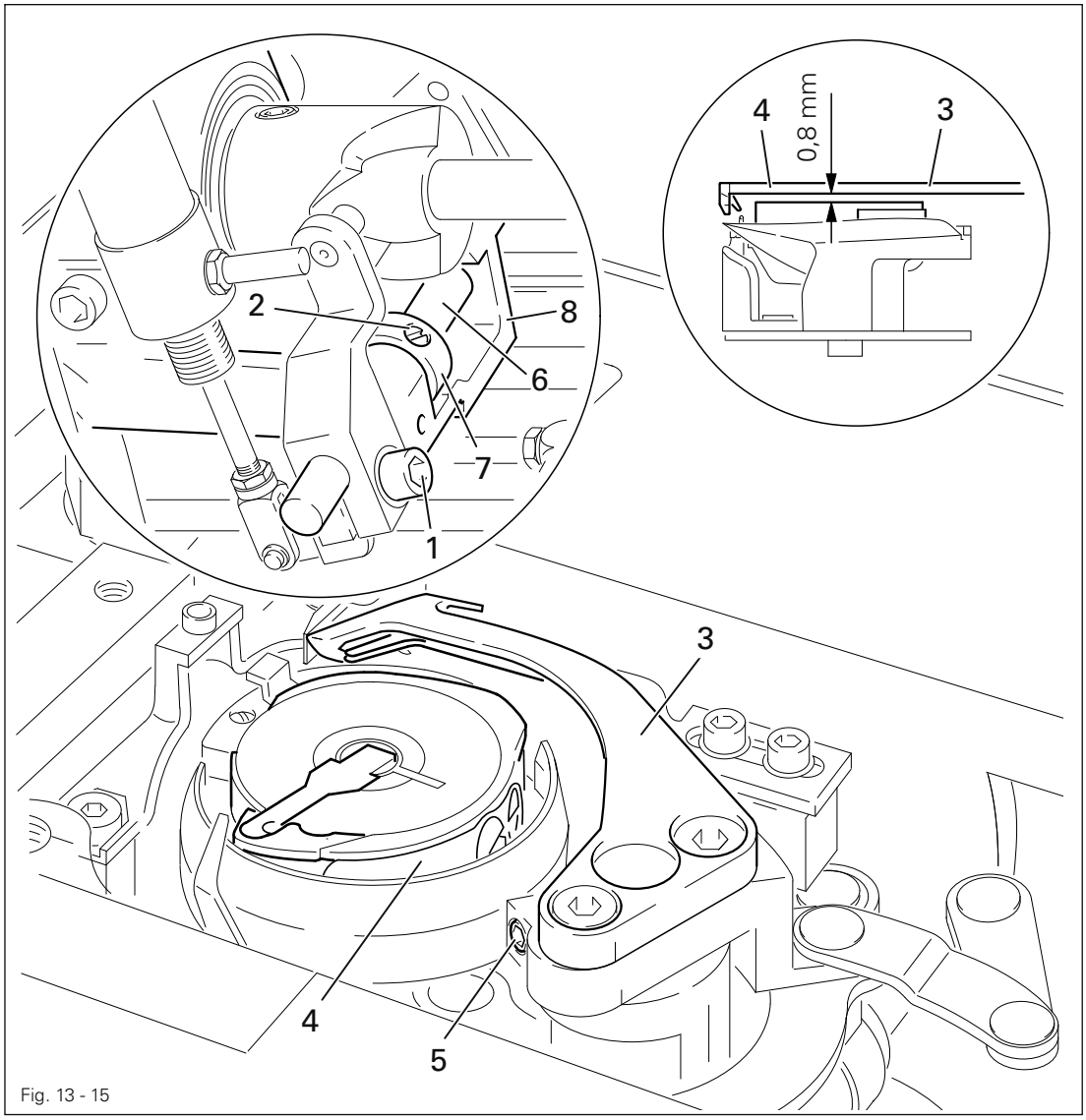

Fig. 13 - 15

- Loosen screws **1** and **2**.
- Position the thread catcher **3** above the bobbin case **4**.
- Move the thread catcher **3** (screw **5**) according to the **requirement**.
- Determine the vertical play of shaft **6**, move retaining collar **7** against bearing housing **8** and tighten screw **2**.

Screw **1** remains slightly unscrewed for further adjustments.

13.05.14 Thread catcher position and knife height

Requirement

When the thread trimmer is in resting position,

1. the front edges of the thread catcher **3** and the knife **5** must be flush with each other.
2. the upper edges of the thread catcher **3** and the knife **5** must be even.

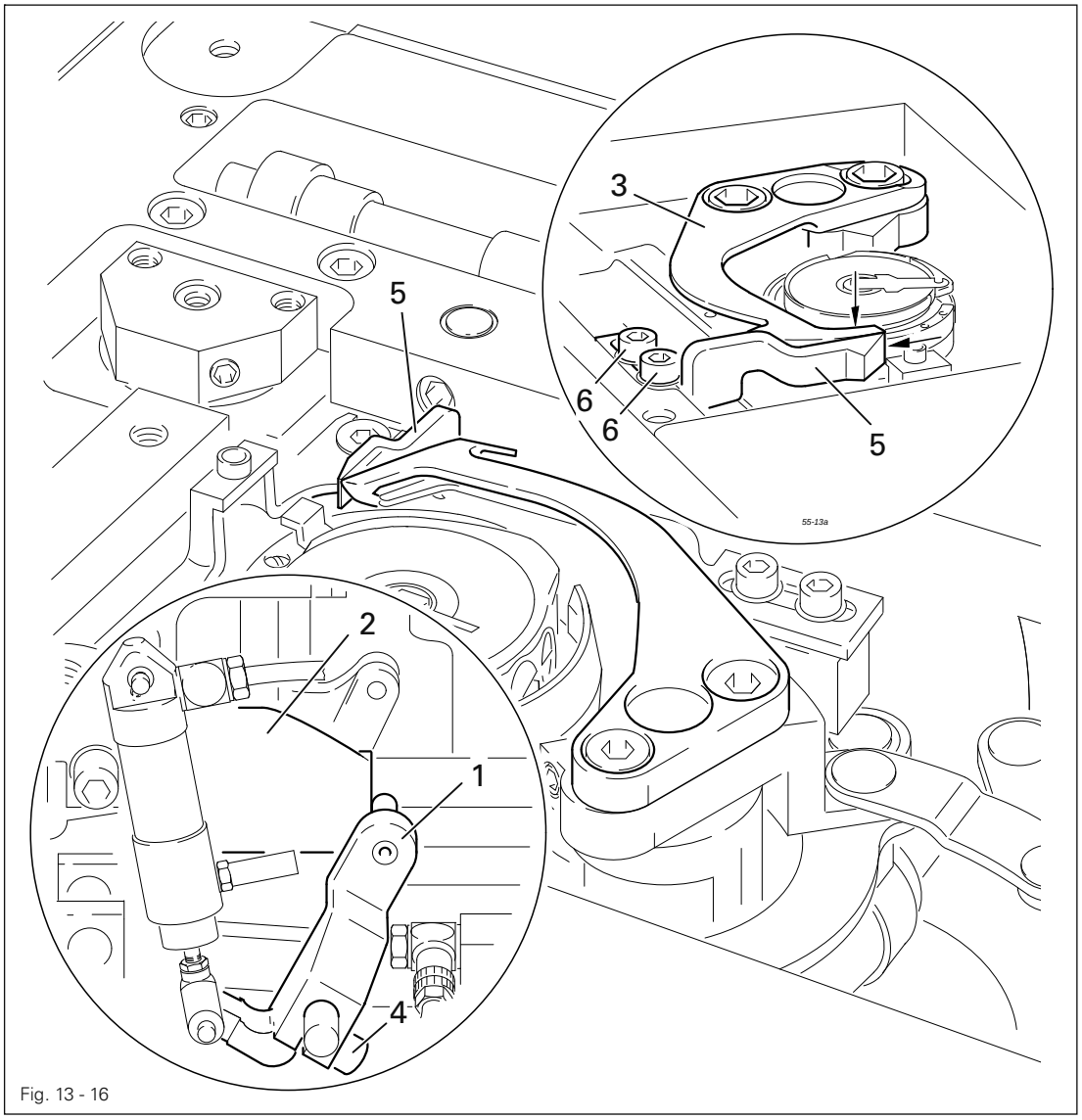

Fig. 13 - 16

- Bring the needle bar to BDC.
- Move roller lever **1** against control cam **2** by hand.
- Turn the thread catcher **3** according to **requirement 1**.
- Tighten screw **4**.
- Check the knife height according to **requirement 2**.

To adjust the height, disassemble knife **5** (screws **6**) and insert shim (part no. **91-141 402-05**) according to the **requirement**.
To align the knife see chapter **13.05.15 Knife pressure**.

13.05.15 Knife pressure

Requirement
When the point of the thread catcher **4** is **6 mm** in front of the front edge of the knife **5**, the cutting edge of the knife must lightly press against the thread catcher **4**.

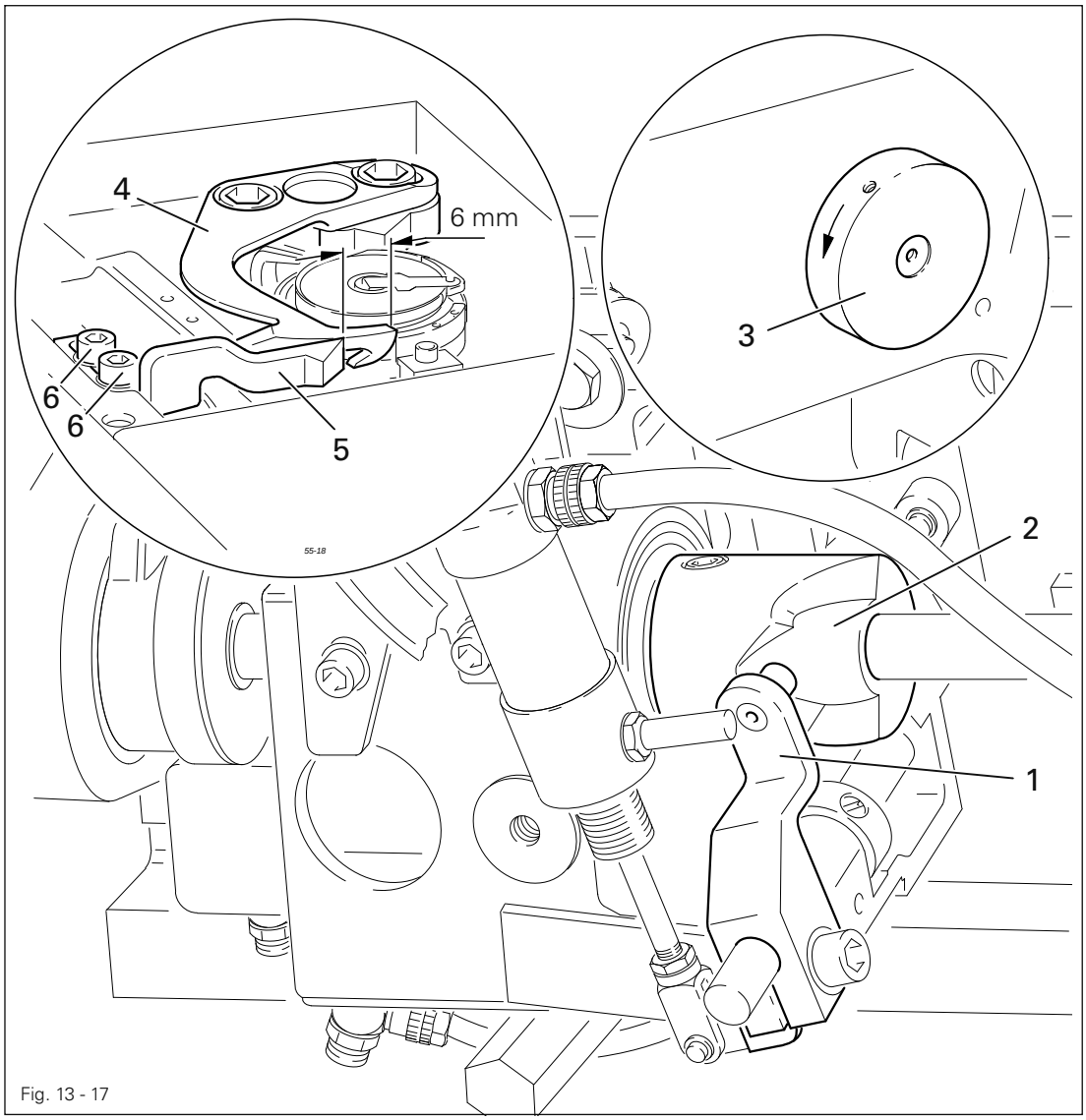

Fig. 13 - 17

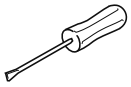

- Bring the take-up lever to BDC.
- Press the roller lever **1** into the control cam **2**.
- Turn the handwheel **3** in the direction of the arrow until the thread catcher **4** is approx. **6 mm** in front of the knife **5**.
- Move the knife **5** (screws **6**) according to the **requirement**.
- Check **requirement 1** from chapter **13.05.14 Thread catcher position and knife height**.

13.05.16 Bobbin thread clamp spring

Requirement

The clamp spring **1** must

1. not be pressed down during the movement of the thread catcher.
2. clamp the bobbin thread reliably after it is cut
3. not obstruct insertion and removal of the bobbin case.

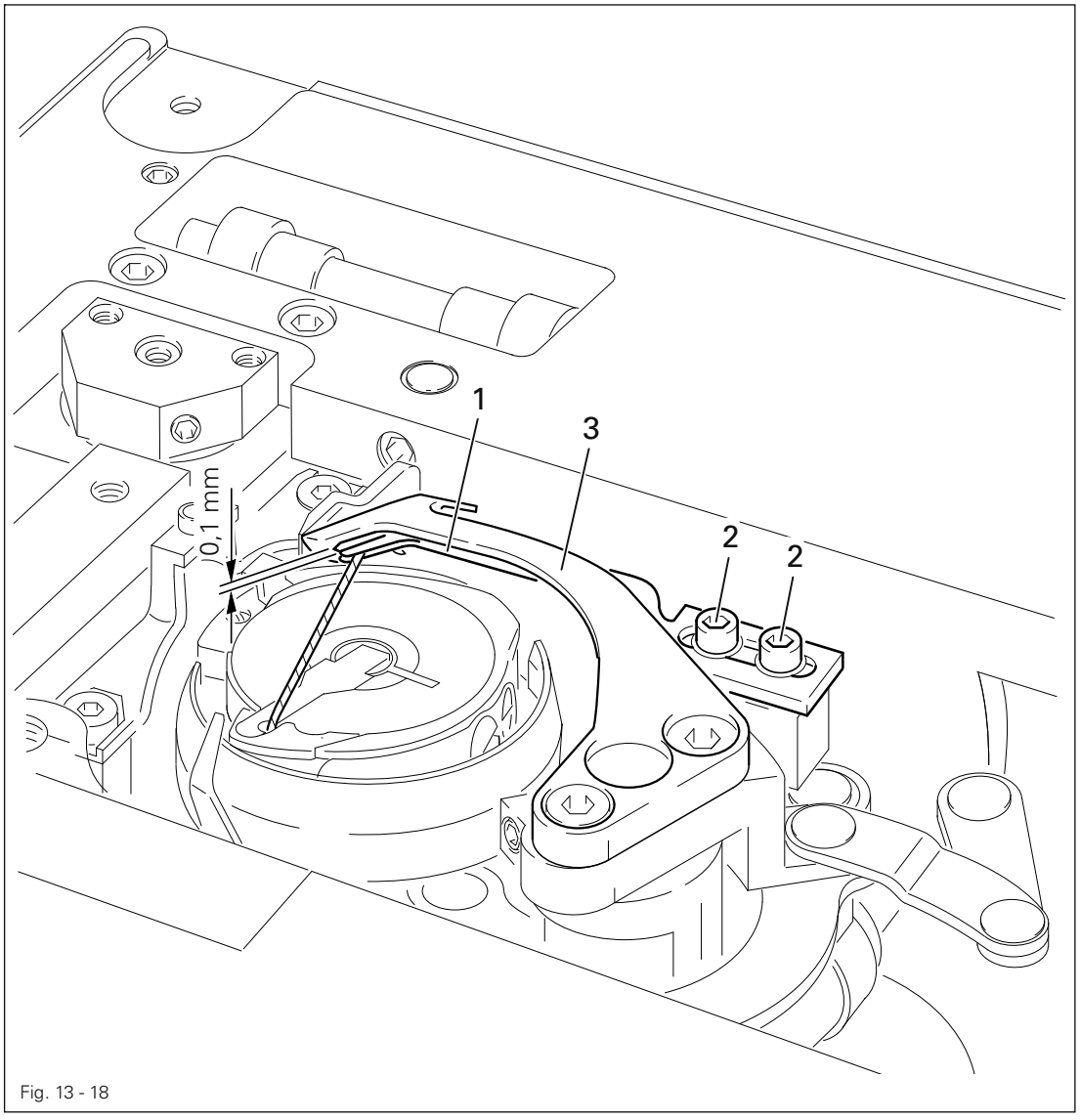

Fig. 13 - 18

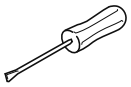

- Bring the thread trimmer to resting position.
- Move the clamp spring **1** (screws **2**) so that the clamp lips are as close as possible to the inside wall and to the front edge of the thread catcher **3**.
- Adjust the height by bending the clamp spring **1** so that between the upper side of clamp spring **1** and the lower side of the thread catcher **3** there is a distance of approx. **0.1 mm**.

13.05.17 Manual cutting test

Requirement

1. When it is moving forward, the thread catcher **1** must not push along the bobbin thread **3** in front of it.
2. At the front point of reversal of the thread catcher **1**, the bobbin thread **3** must lie approx. **2 mm** behind the lug of the thread catcher **1**.
3. At the end of the cutting operation, the needle and bobbin threads must be cut perfectly. The bobbin thread **3** must be clamped.

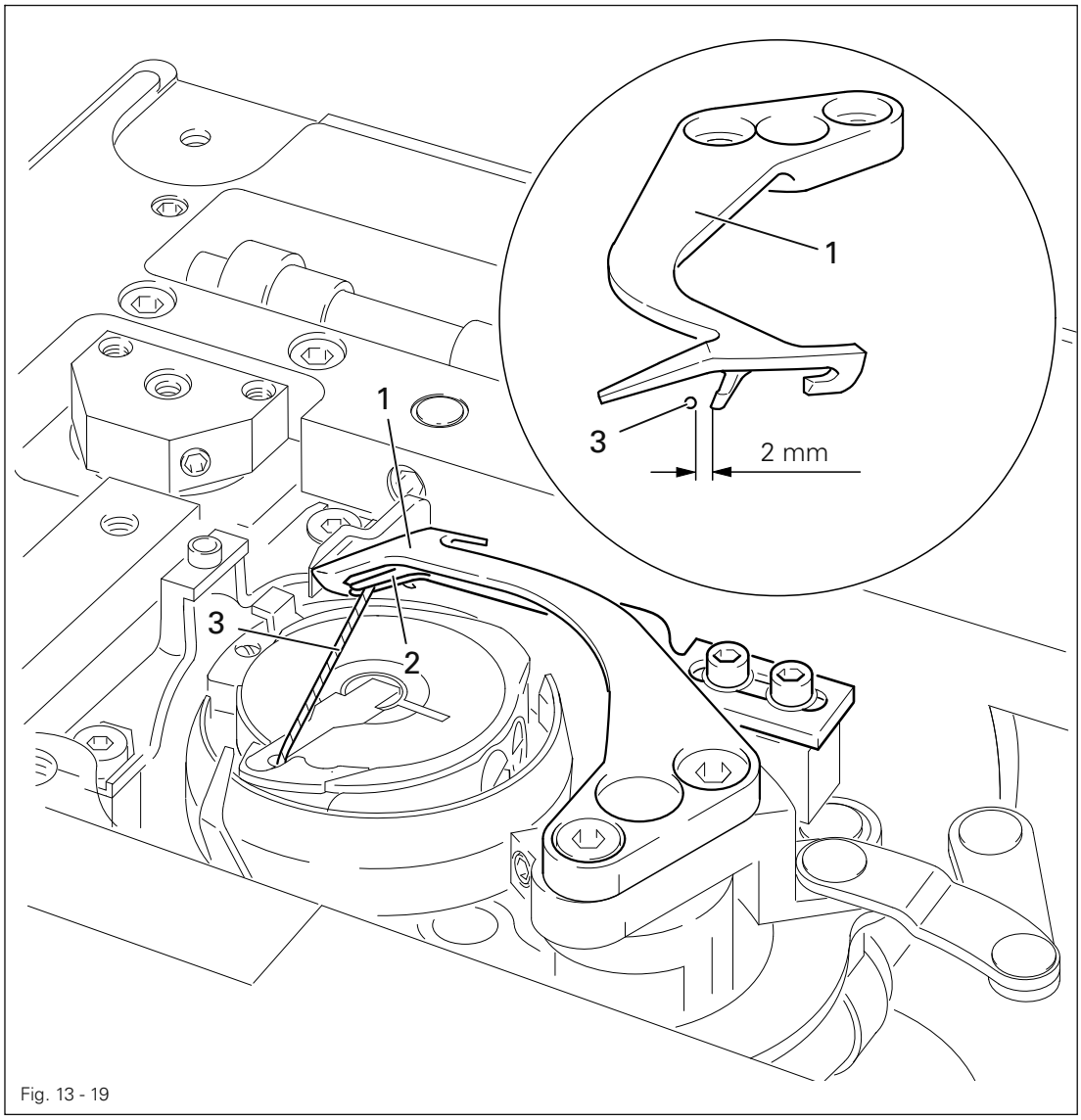

Fig. 13 - 19

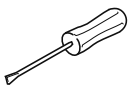

- Carry out the cutting operation manually.
- Check **requirement 1**. If necessary, readjust the thread catcher **1** according to chapter **13.05.13 Thread catcher height.**
- Check **requirement 2**. If necessary, readjust the thread catcher **1** according to chapter **13.05.14 Thread catcher position and knife height.**
- Check **requirement 3**. If necessary, readjust the bobbin thread clamp spring **2** according to chapter **13.05.16 Bobbin thread clamp spring.**

13.05.18 Presser foot stroke position

Requirement
When the needle bar is at b.d.c., presser foot **3** must be at the bottom of its stroke.

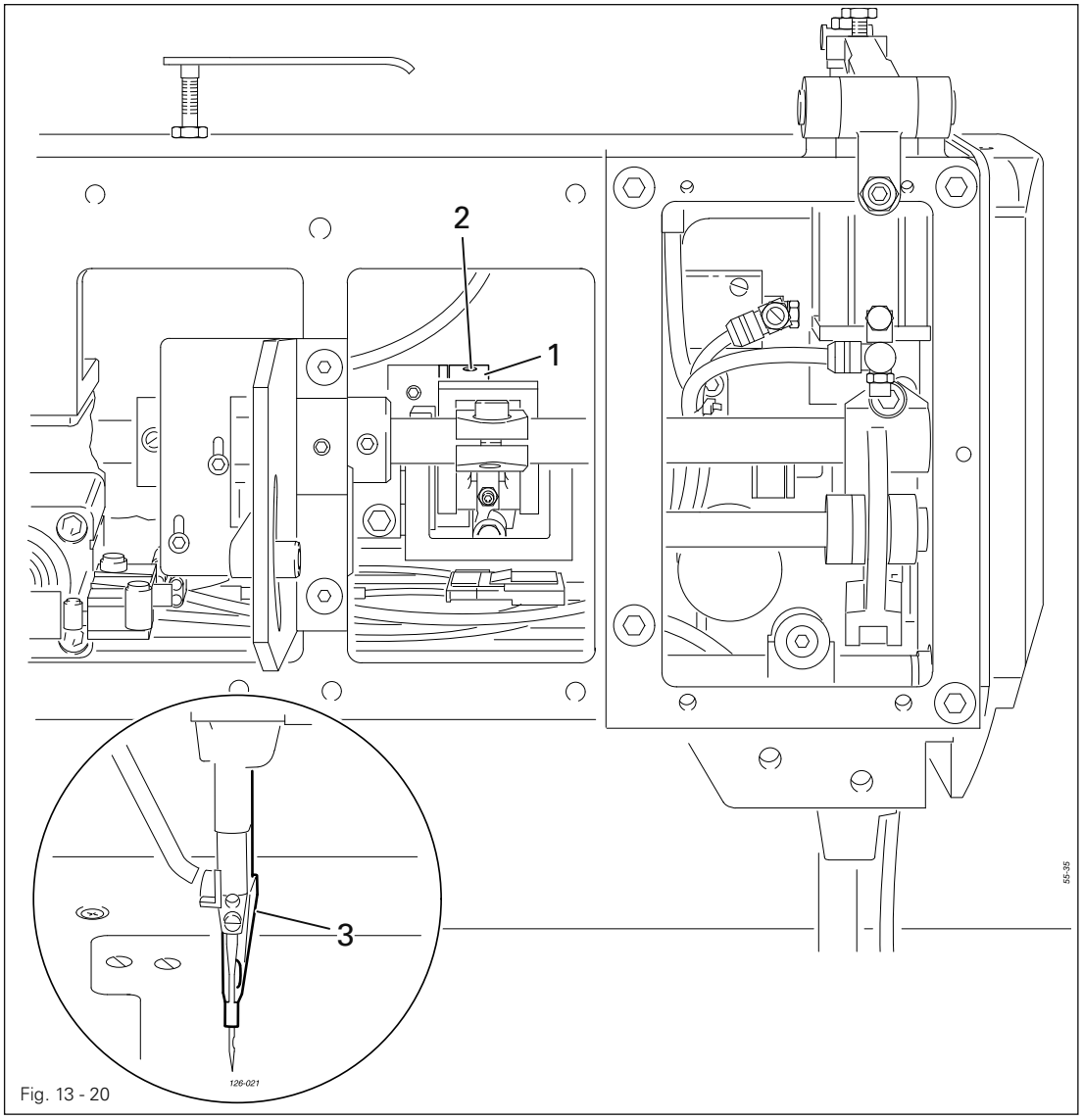

Fig. 13 - 20

- Adjust eccentric **1** (screws **2**) according to the **requirement**.

13.05.19 Presser foot lifting stroke

Requirement

1. When lever **1** is set at „**0**", the presser foot should not move.
2. With the lift set at **7 mm**, sprocket wheel **7** should just be released.
3. When the needle bar is at b.d.c., and the lever **1** is set at „**10**", joints **9** should be in line.

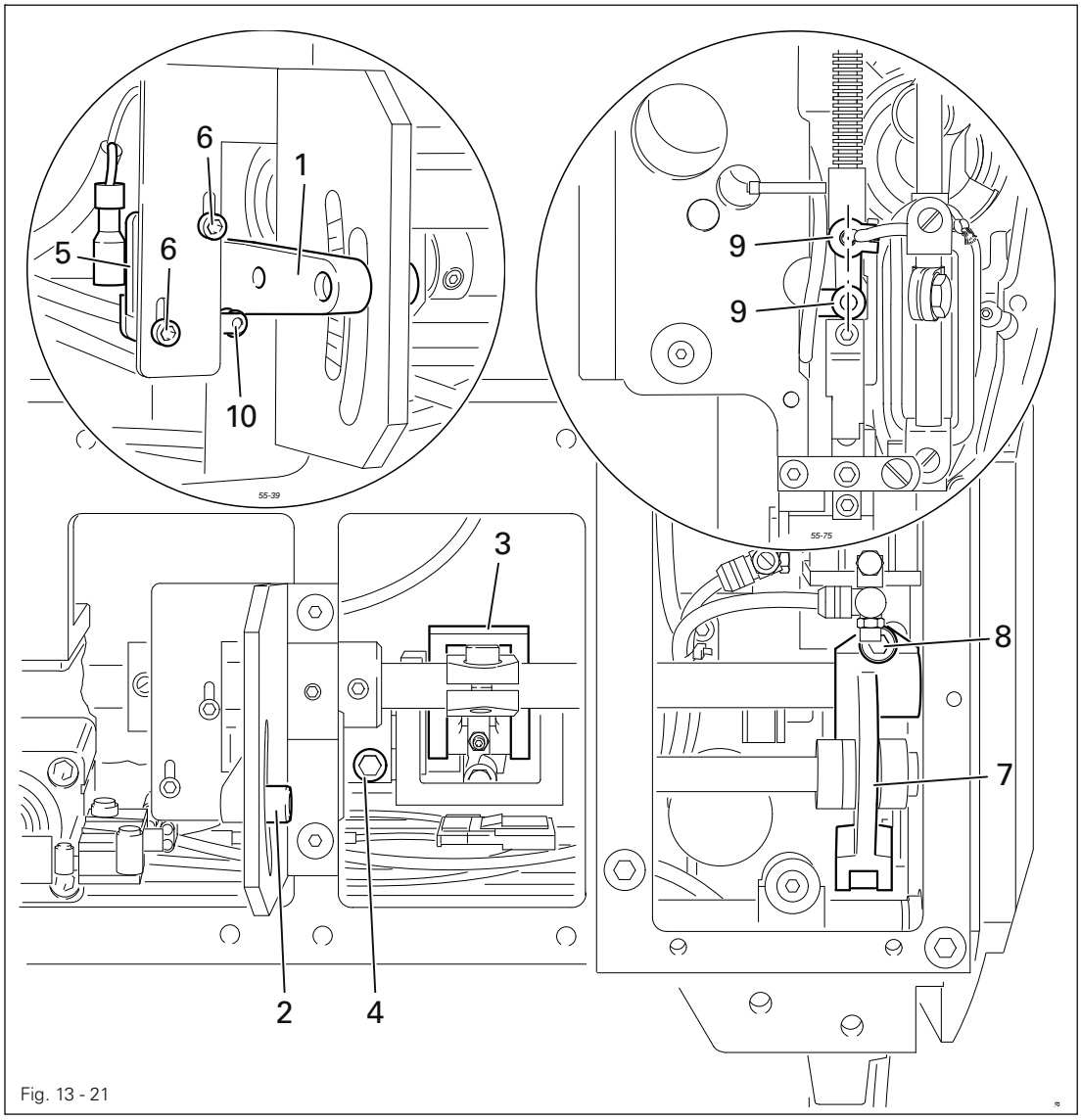

Fig. 13 - 21

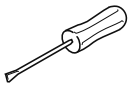

- Set lever **1** (screw **2**) at „**0**".
- Adjust crank **3** (screw **4**) according to **requirement 1**.
- Set lever **1** (screw **2**) at „**7**".
- Adjust switch **5** (screw **6**) according to **requirement 2**.
- Set lever **1** (screw **2**) at „**10**".
- Adjust lever **7** (screw **8**) according to **requirement 3**. (When joints **9** are over-extended, a double stroke is carried out.)

13.05.20 Adjust presser foot to material thickness

Requirement
At its b.d.c. the presser foot should be a distance above the counter presser equivalent to the thickness of the material.

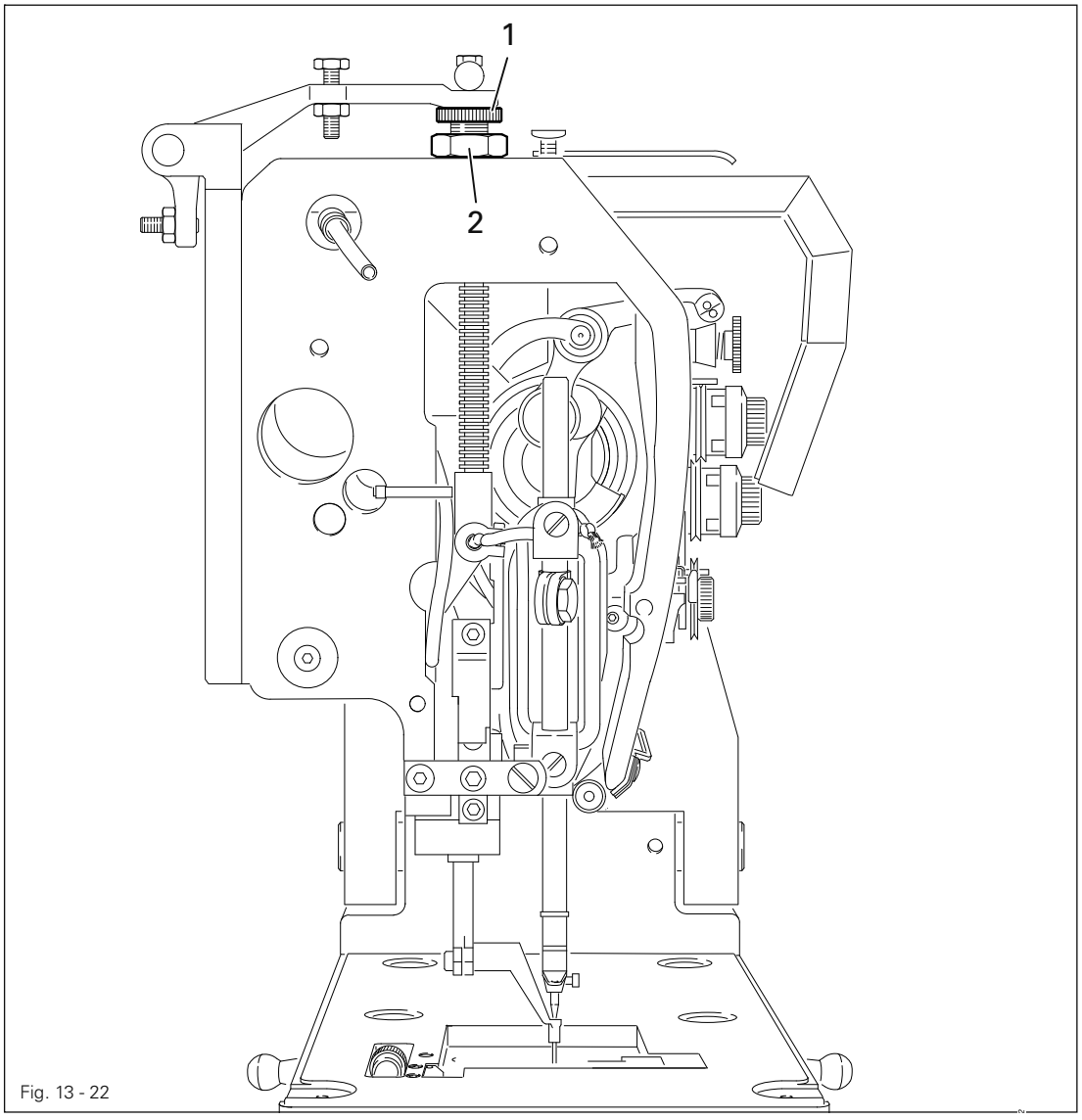

Fig. 13 - 22

- Adjust knurled screw **1** (screw **2**) according to the **requirement**.

13.05.21 Presser foot height

Requirement
When the needle bar is at t.d.c. and the presser foot **3** raised, the needle must not protrude below the presser foot.

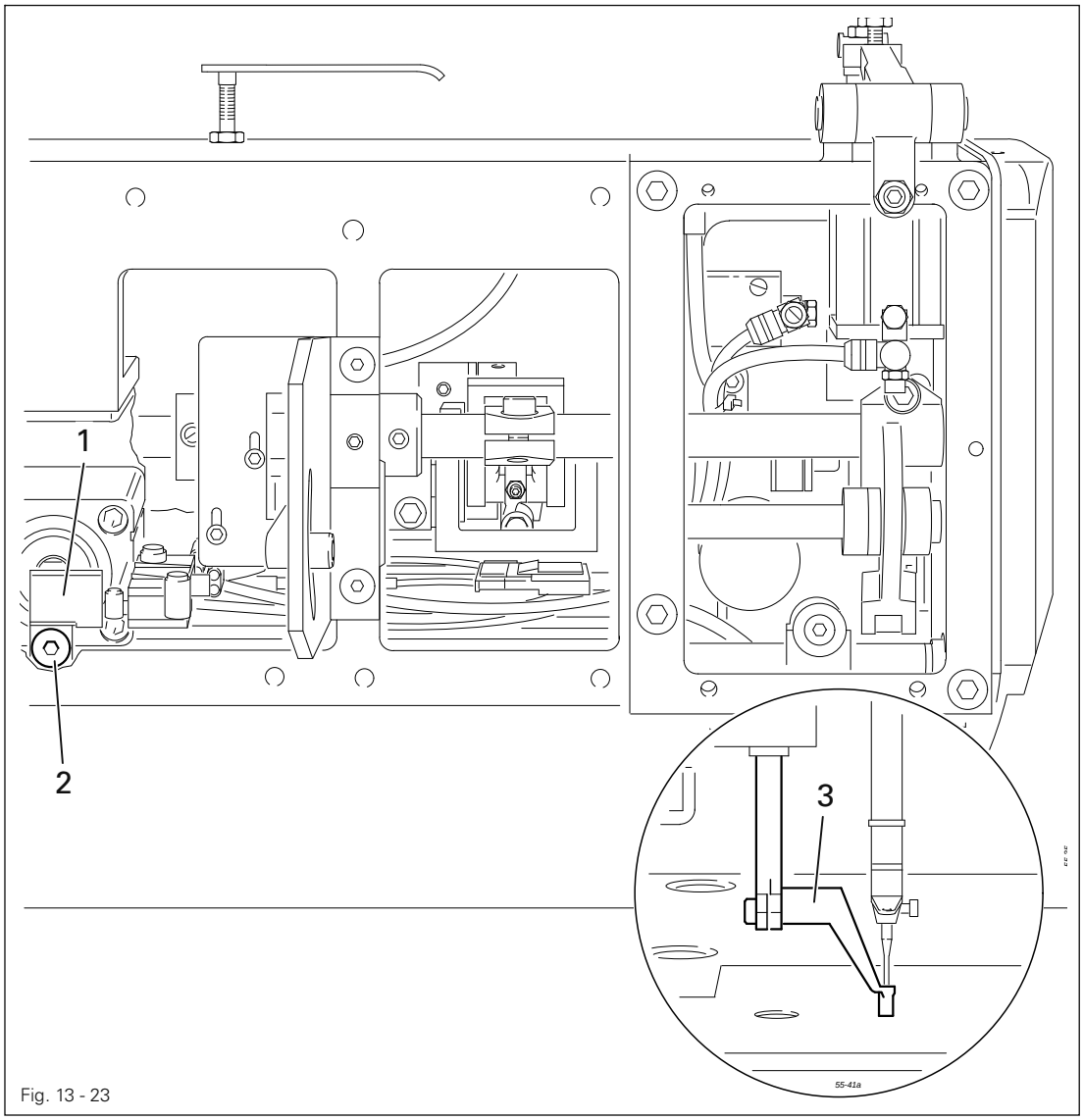

Fig. 13 - 23

- Adjust clamp **1** (screw **2**) according to the **requirement**.

13.05.22 Adjustment of the presser foot level

Requirement

1. When the presser foot level is programmed, the second foot height should be set so that presser foot **5** is a distance above the counter presser **6** equivalent to the thickness of the workpiece.
2. When the needle bar is at b.d.c. and the level adjustment is raised to its maximum, the needle bar must not touch presser foot **5**.

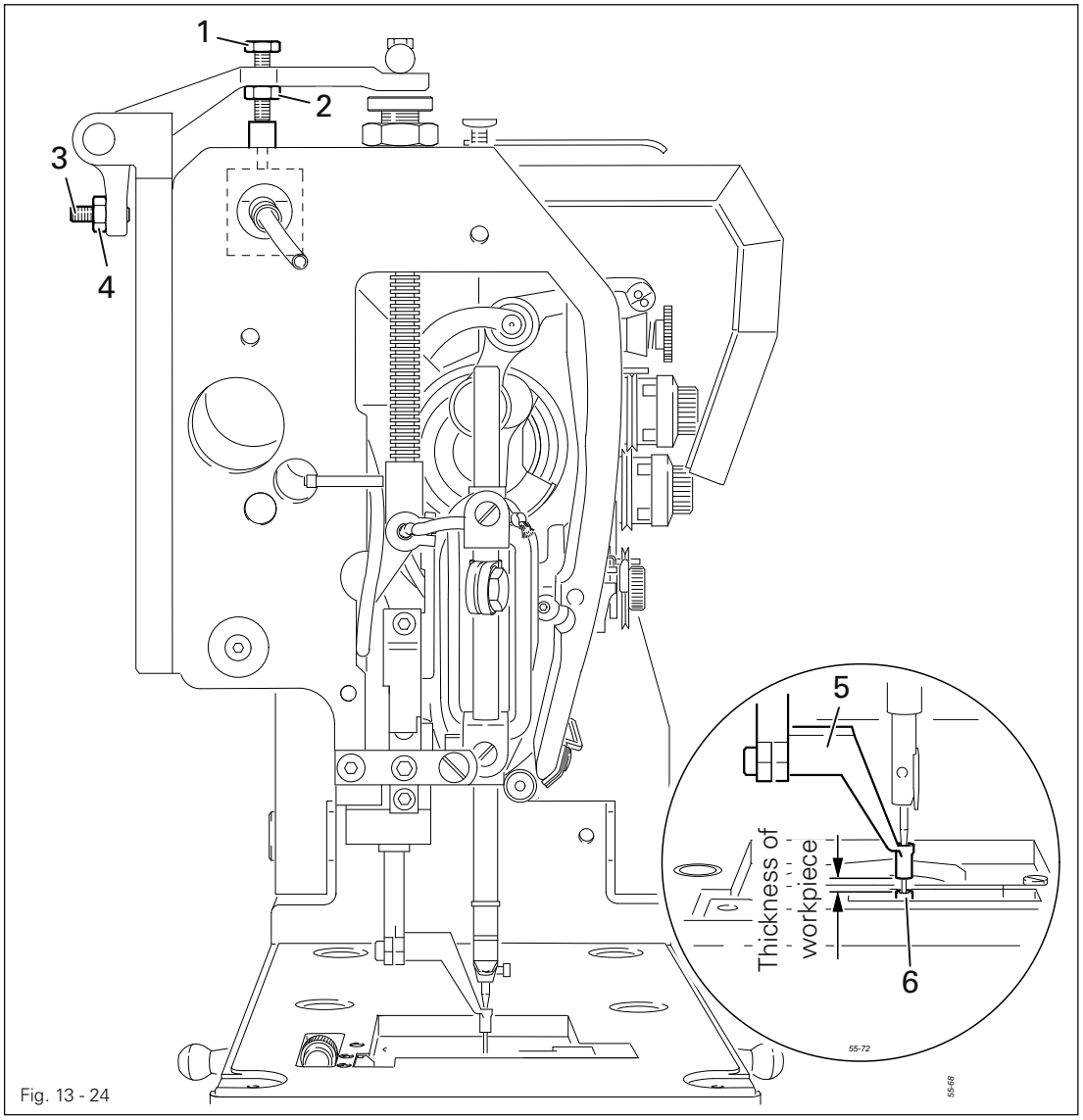

Fig. 13 - 24

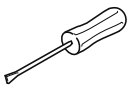

- Adjust screw **1** (nut **2**) according to **requirement 1**.
- Adjust screw **3** (nut **4**) according to **requirement 2**.

13.05.23 Bobbin winder

Requirement

1. When the bobbin winder is switched on, the bobbin winder spindle must move securely with the winder.
2. When the bobbin winder is switched off, friction wheel **5** must not be driven by drive wheel **1**.
3. The bobbin winder must switch off automatically when the bobbin has been filled to approx. **1 mm** from the edge.

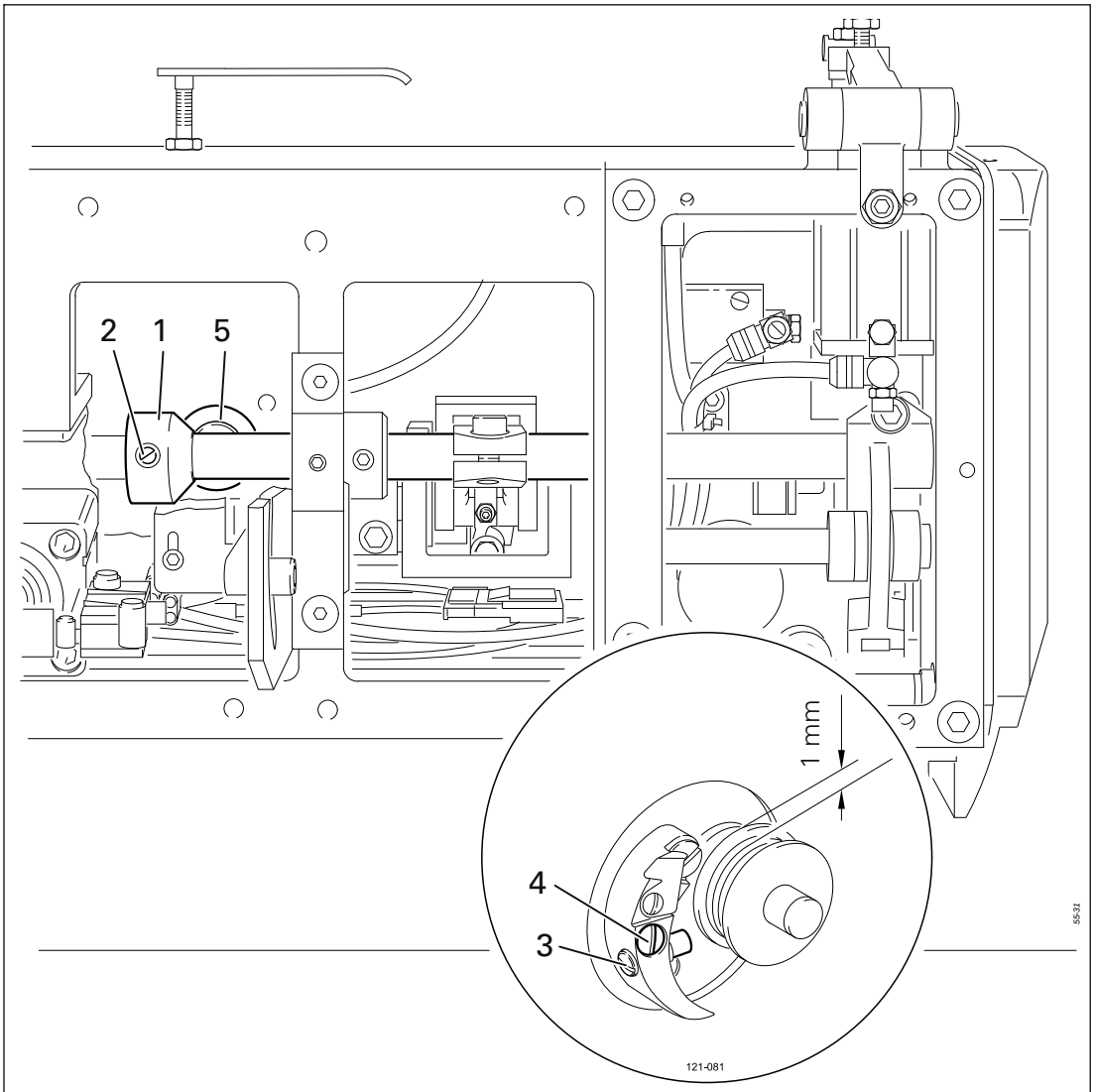

Fig. 13 - 25

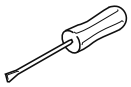

- Move drive wheel **1** (screws **2**) according to **requirements 1** and **2**.
- Move pin **3** (screw **4**) according to **requirement 3**.

13.05.24 Needle thread tension release

Requirement
For the tension release, the distance between the tension disks must be **0.5 mm**.

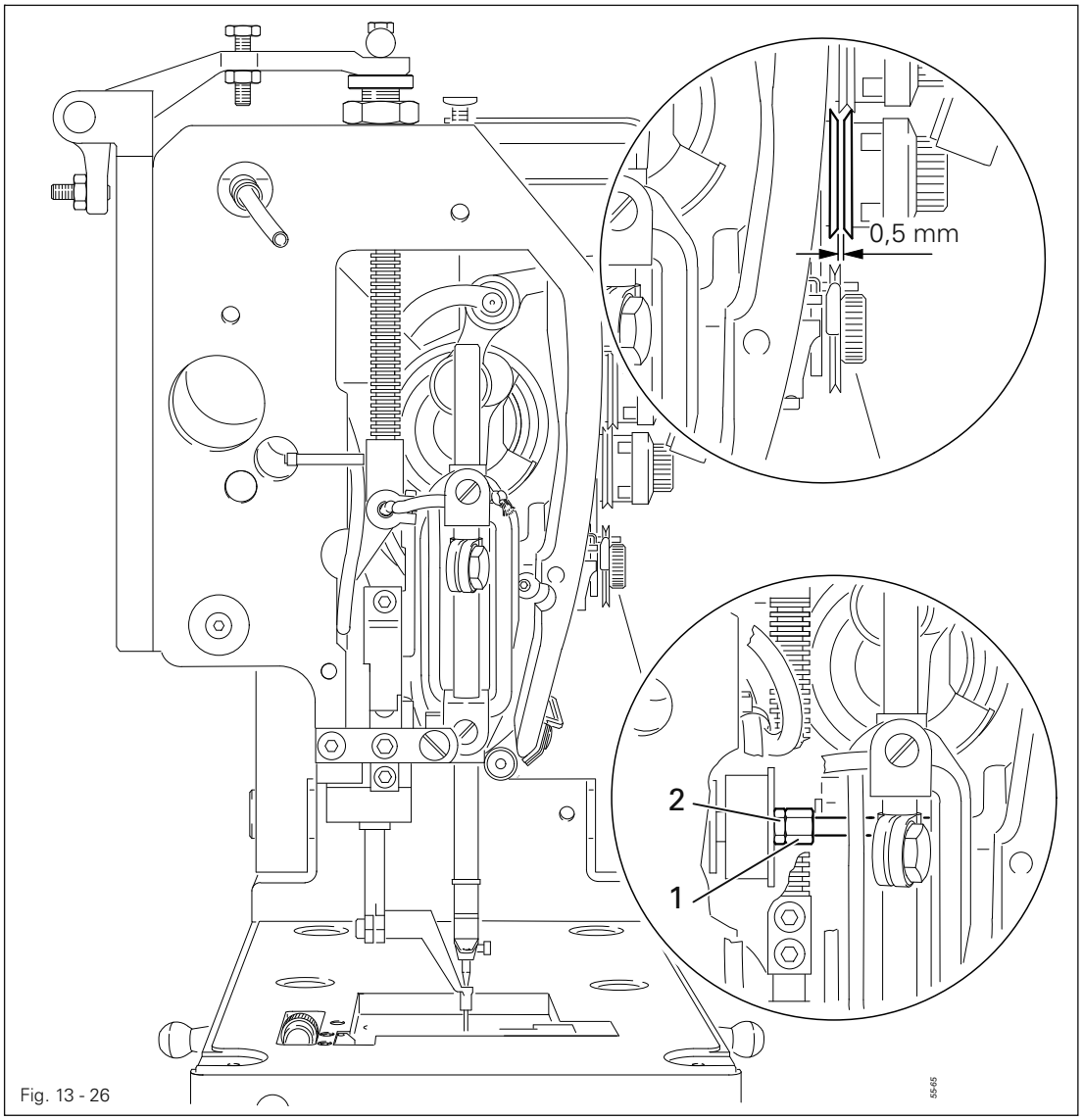

Fig. 13 - 26

- Turn screw **1** (nut **2**) according to the **requirement**.

13.05.25 Thread check spring and slack thread regulator

Requirement

1. The stroke of thread check spring **7** must be completed when the needle point penetrates the material (travel of the spring approx. **7 mm**).
2. When the thread loop is at its largest when going round the hook, the thread check spring **7** must be lifted slightly above support **1**.

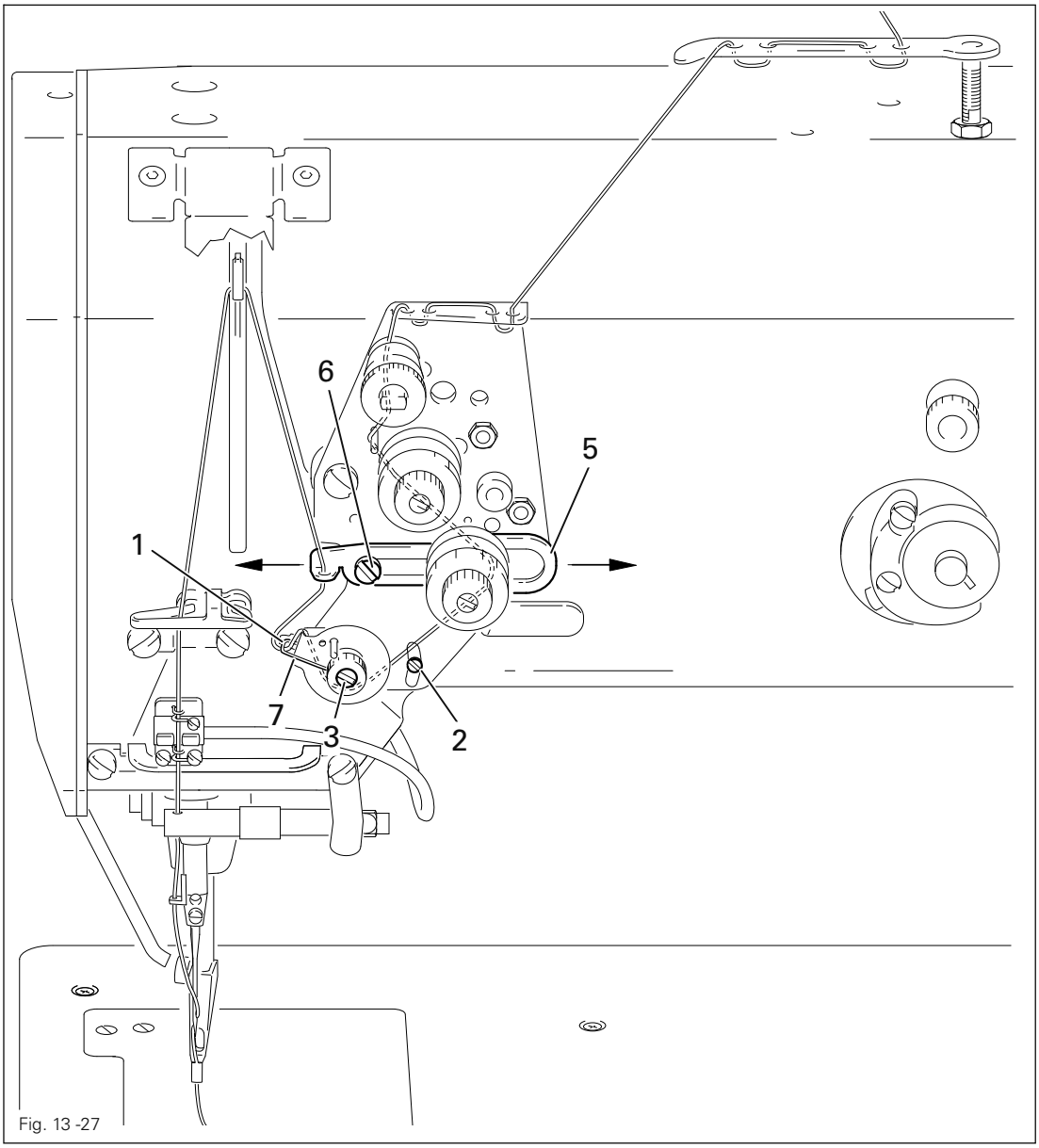

Fig. 13 -27

- Position rest **1** (screw **2**) according to **Requirement 1**.
- To adjust the spring tension, turn screw **3** (screw **4**).
- Position thread regulator **5** (screw **6**) according to **Requirement 2**.

For technical reasons, it may be necessary to deviate from the travel of the spring and/or the spring tension indicated here.

13.05.26 Sewing head lifting cylinder

Requirement
The up and down movement of the sewing head must be uniform.

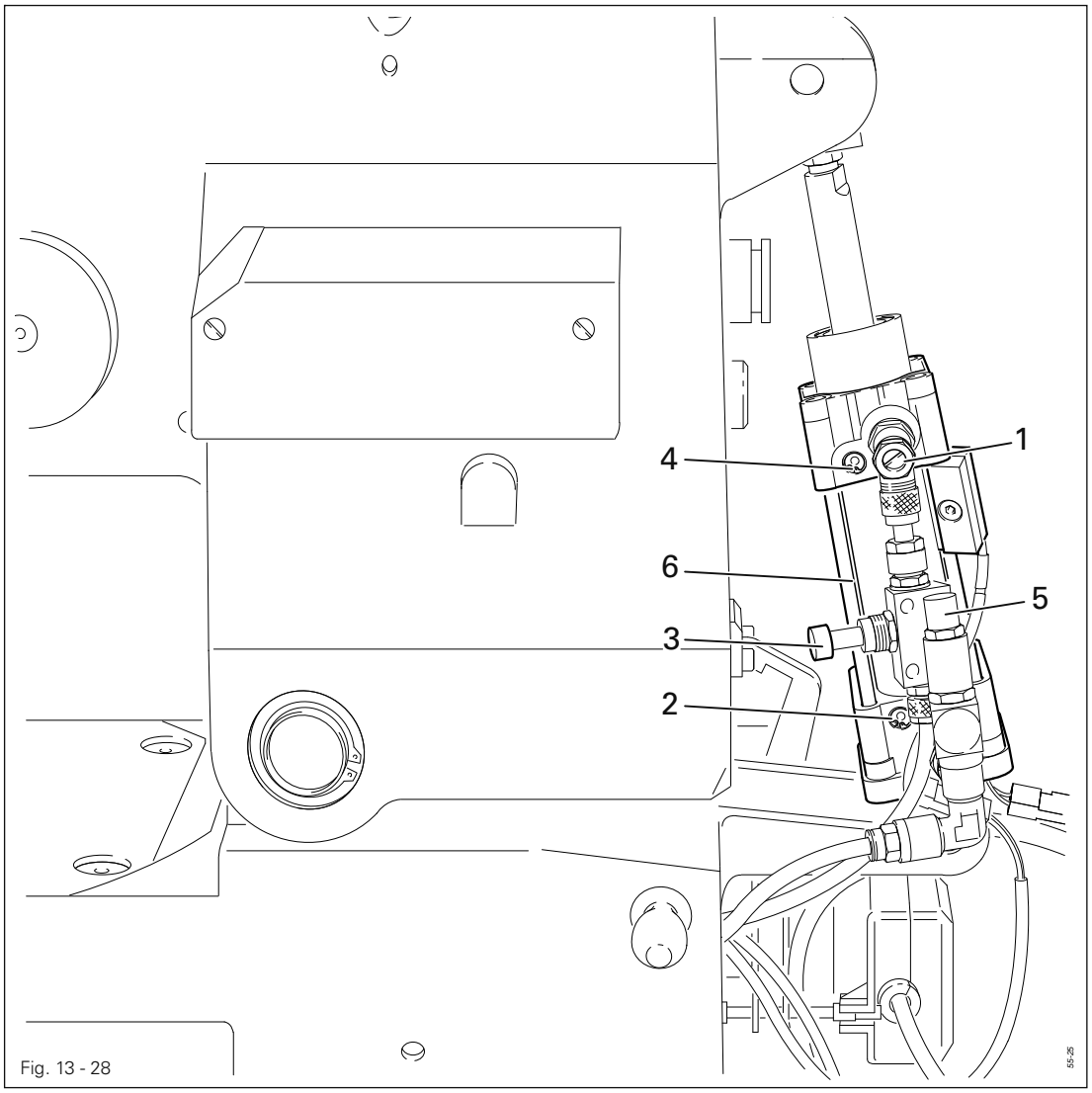

Fig. 13 - 28

- Insert the sewing head and connect. (See chapter **13.04 Removing/inserting sewing head**.)
- Adjust the speed (screw **1**) and shock absorbing action (screw **2**) of the upwards movement of the sewing head, and the speed (screw **3**) and shock absorbing action (screw **4**) of the downwards movement of the sewing head according to the **requirement**.

The pressure for the downward movement can be regulated with screw **5** (standard setting **4.5** bar).

When adjusting the shock absorbing action, make sure that the cylinder **6** moves as far as it can go especially for the downward movement of the sewing head!

13.05.27 Bobbin thread slide

Requirement

When bobbin thread slide **5** is in its resting position

1. There should be a clearance of **12 mm** between the front edge of the needle plate and the rear edge of the bobbin thread slide **5**,
2. The top edge of the bobbin thread slide **5** should be flush with the top edge of the needle plate and
3. The bobbin thread slide **5** should be slightly touching the needle plate.
4. In an extended position there should be a clearance of **18.5 mm** between the rear edge of bobbin thread slide **5** and the front edge of the needle plate.

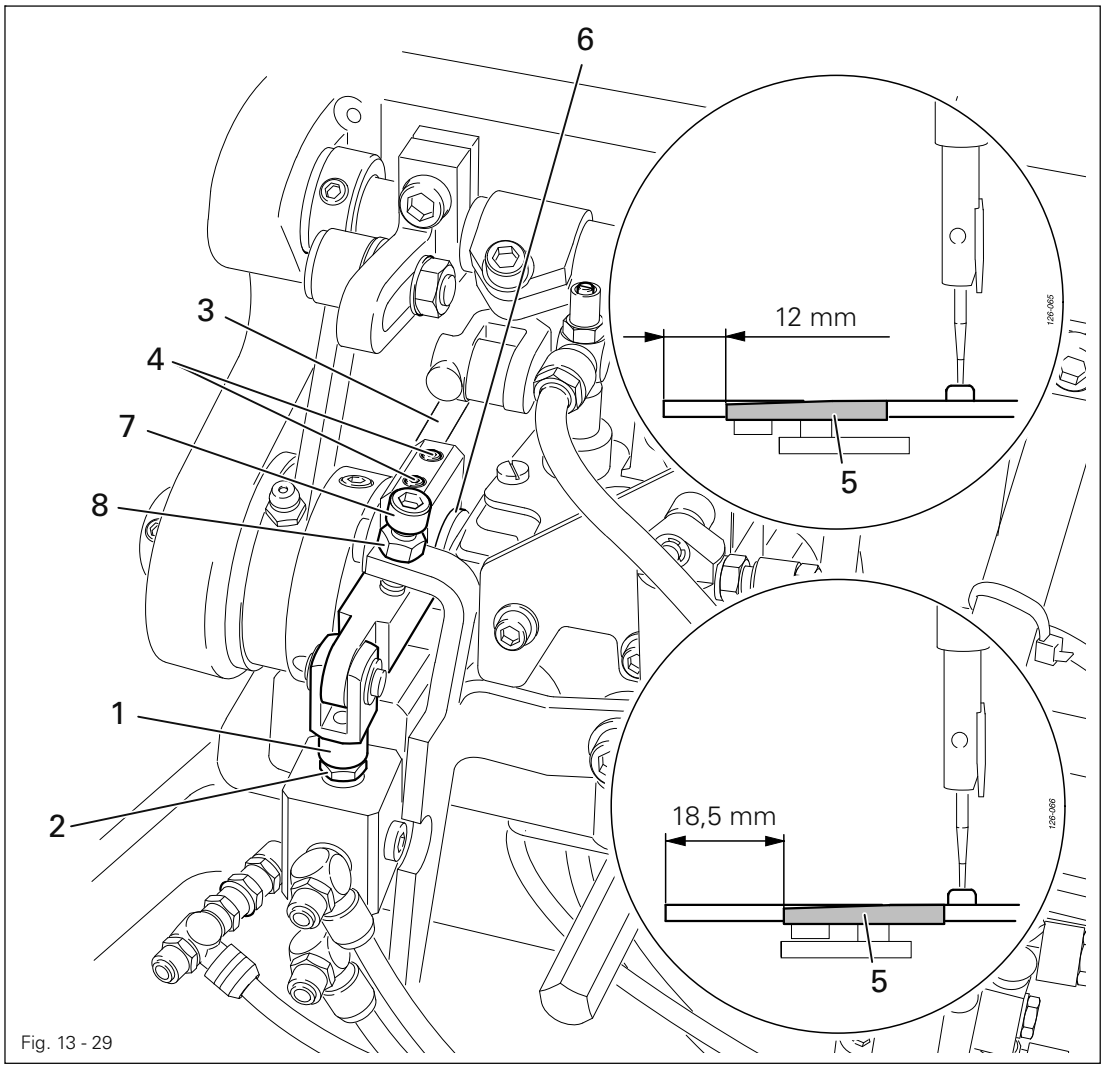

Fig. 13 - 29

- Turn plunger **1** (nut **2**) in accordance with **requirement 1**.
- Adjust holder **3** (screws **4**) in accordance with **requirement 2**.
- Using supports **6**, move bobbin thread slide **5** into position in accordance with **requirement 3**.
- Adjust stop **7** (nut **8**) in accordance with **requirement 4**.

13.05.28 Hook lubrication

Requirement
When the machine is running, after approx. **10** seconds a fine line of oil must form on a paper strip **4** held next to the hook.

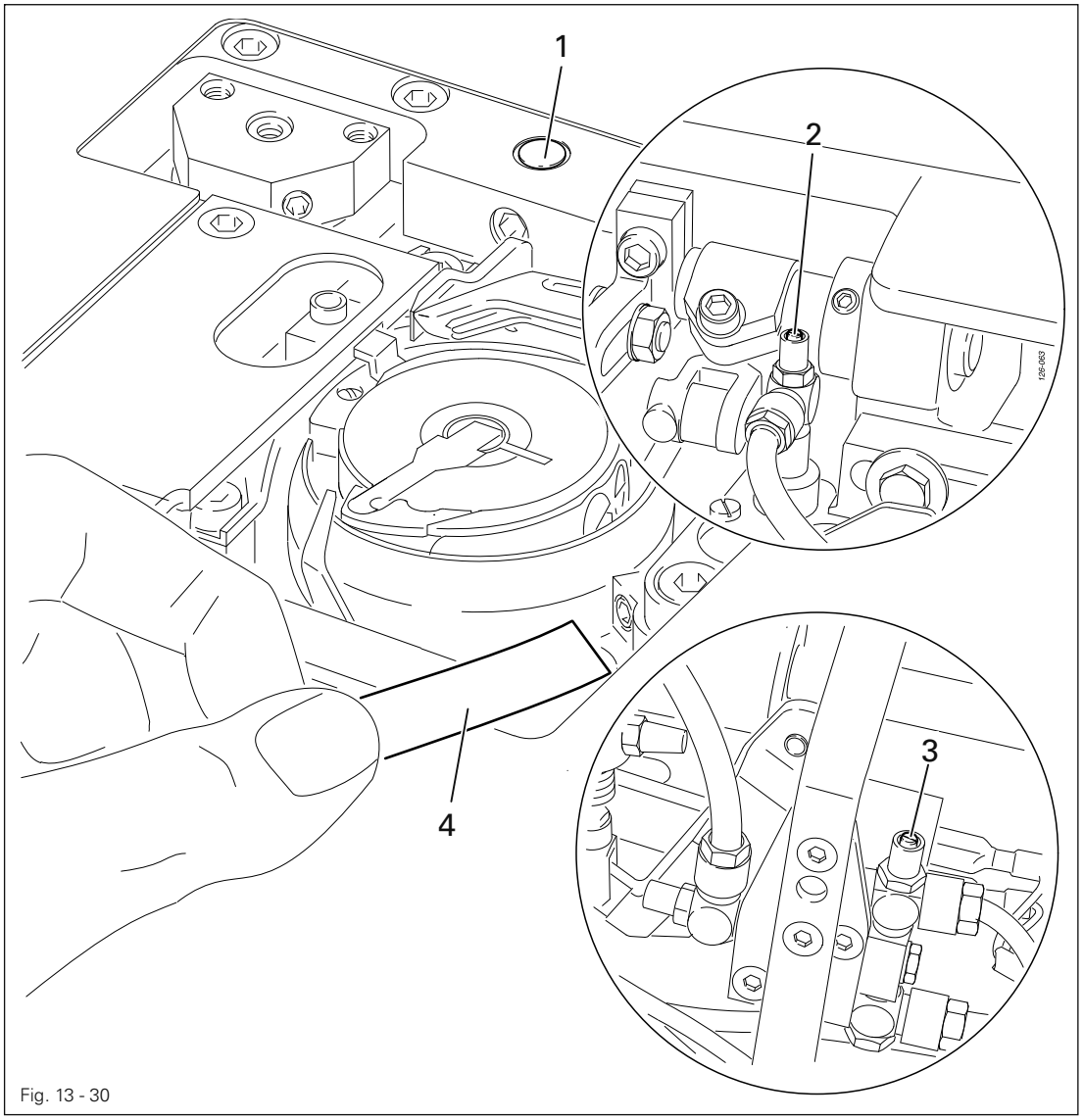

Fig. 13 - 30

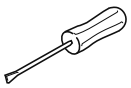

- Unscrew hook compartnant cover.
- Cover sensor **1** with metal ruler.
- Turn on machine.



- Call up the input menu.

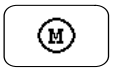

- Call up the "sewing motor adjustment" function, see Chapter **13.08 Sewing motor adjustments.**
- Set the speed at **2000** min^{-1}.



When the sewing motor is running, do not reach into the needle area!
Danger of injury by the moving parts!

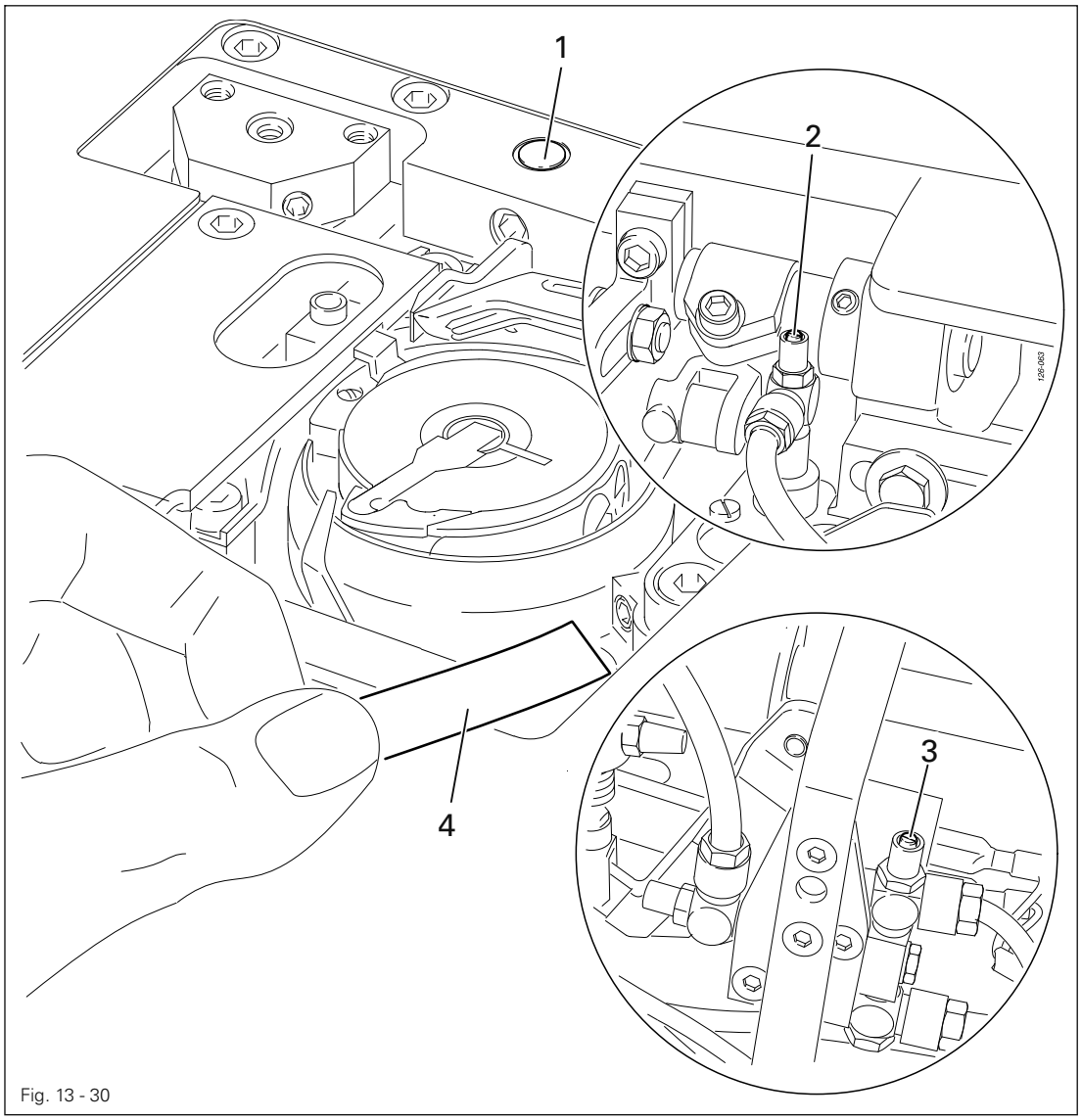

Fig. 13 - 30

- Allow the sewing motor to run for 2-3 min.
- While the motor is running, hold a paper strip 4 next to the hook and check the **requirement**.
- If necessary, adjust the oil supply with screw 2.
- Switch the machine off and screw on the hook compartment cover.

The wick used for lubricating the front parts must always be impregnated with oil. However, oil must not drip onto the bedplate!
If necessary, adjust the amount of oil with screw 3.

13.06 Adjusting the clamp drive and clamp feeder

13.06.01 Monitoring the clamp drive

Requirement

1. The initiator **1** should be **0.2 mm** below the switch lug **3**.
2. It should not be possible to move clamp **5** more than **3 mm** down and **303 mm** up in y-direction from its zero point.

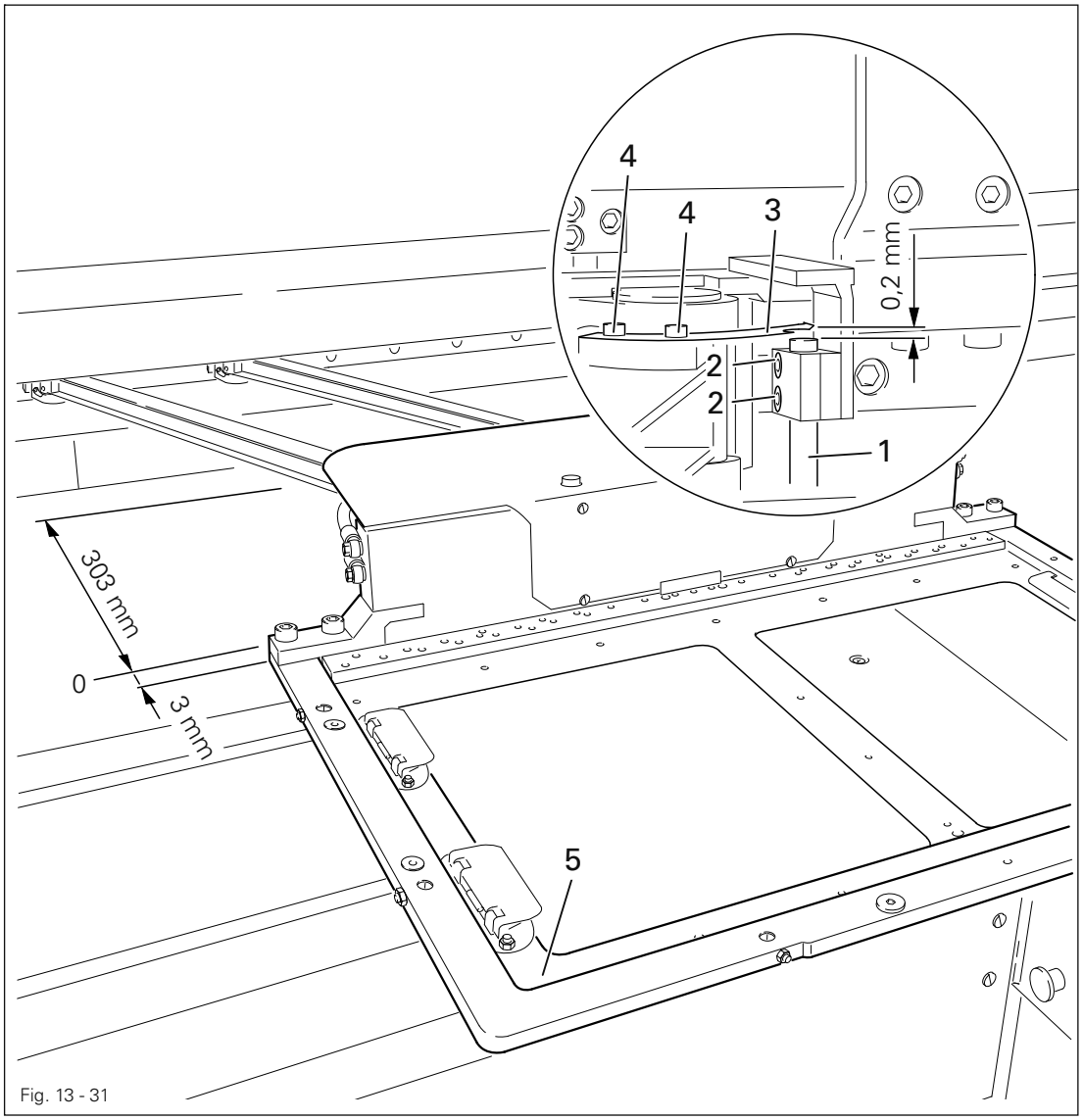

Fig. 13 - 31

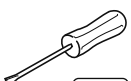

- Switch machine on.



- Call up the input menu.

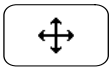

- Call up the "stepping motors" function.
- Adjust initiator **1** (screw **2**) in accordance with **requirement 2**.
- To check **requirement 1**, move stepping motors in the Y-direction and adjust cam switch **3** (screws **4**) in accordance with **requirement 1**.

13.06.02 Aligning the clamp drive

Requirement
Clamp **2** should lightly touch the surface evenly over the entire table top area.

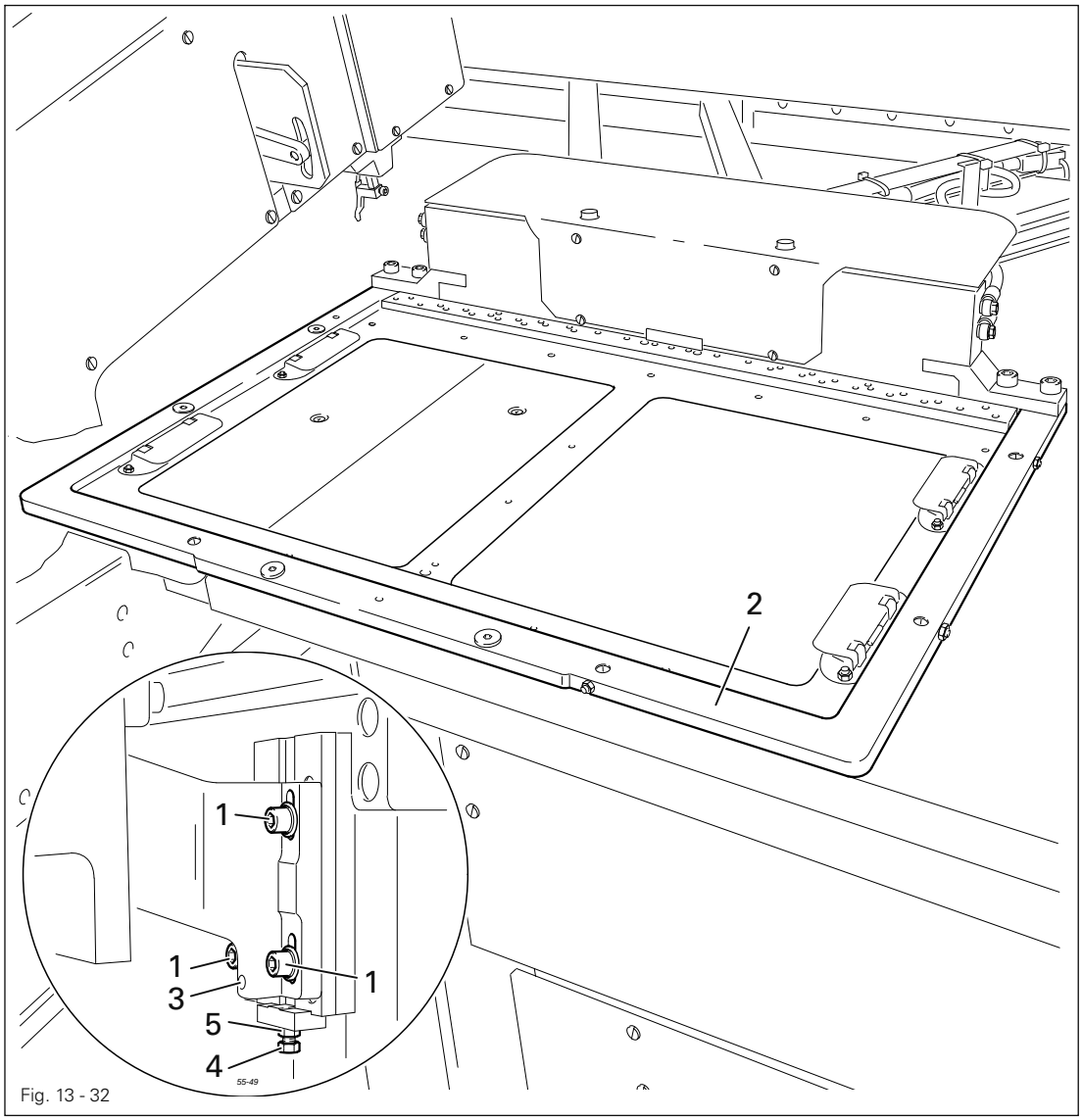

Fig. 13 - 32

- Loosen the **4** screws on both sides of the machine.
- Align clamp **2** according to the **requirement** by turning screws **3** and **4** (nuts **5**).

13.06.03 Hand-over position of the clamp feeder at the loading station

Requirement
During indexing the clamp should not move.

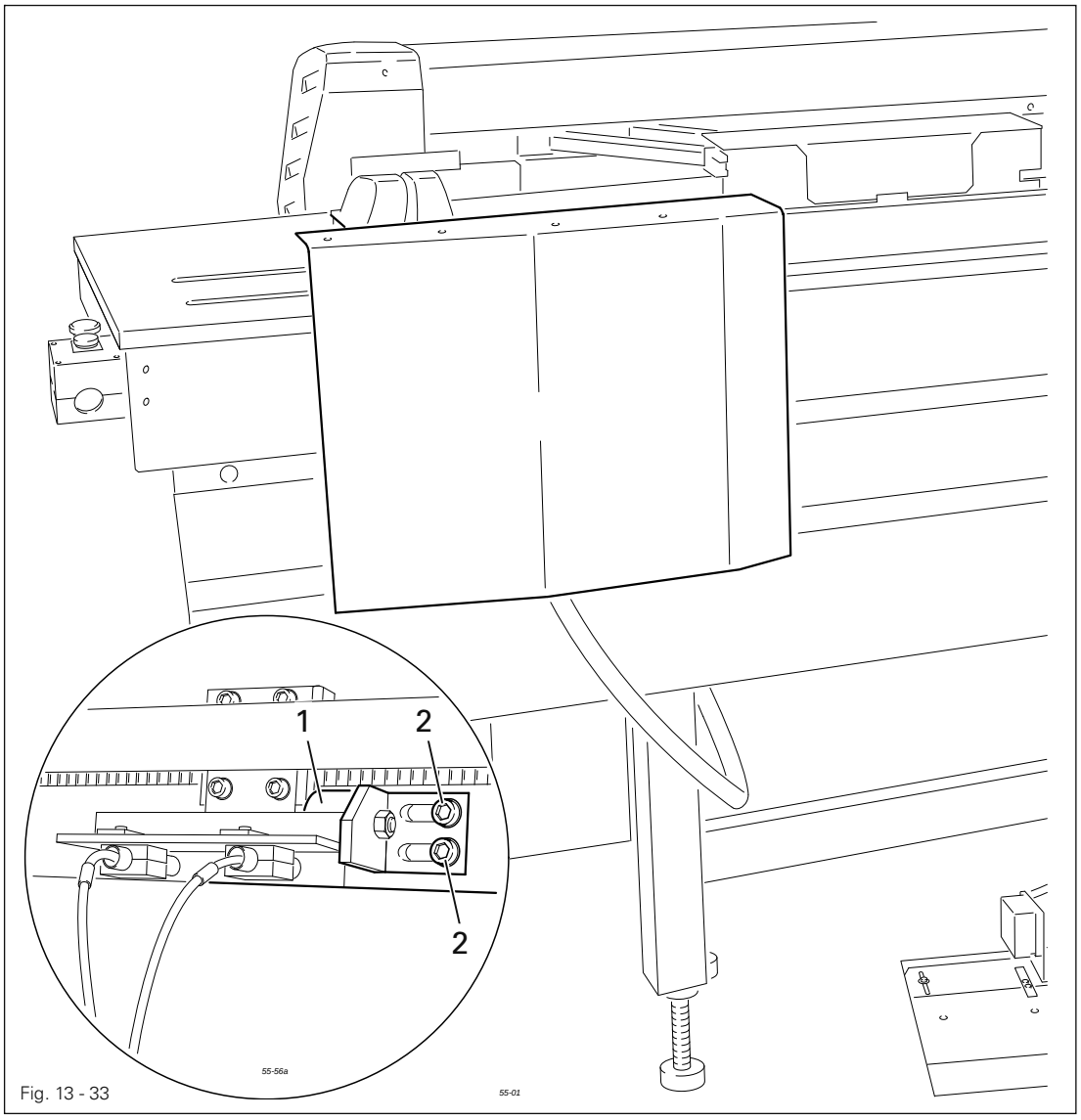

Fig. 13 - 33

- Adjust stop **1** (screws **2**) according to the **requirement**.
- To check the **requirement** switch on the machine and run through the function sequence Individual step.
- Check the feeder hand over and feeder take over position and adjust if necessary, see Chapter **8.09 Check/adjust zero points.**

13.06.04 Hand over position of the transport pins

Requirement

1. The transport pins should be parallel to the clamp.
2. The clamp should be taken over without play.

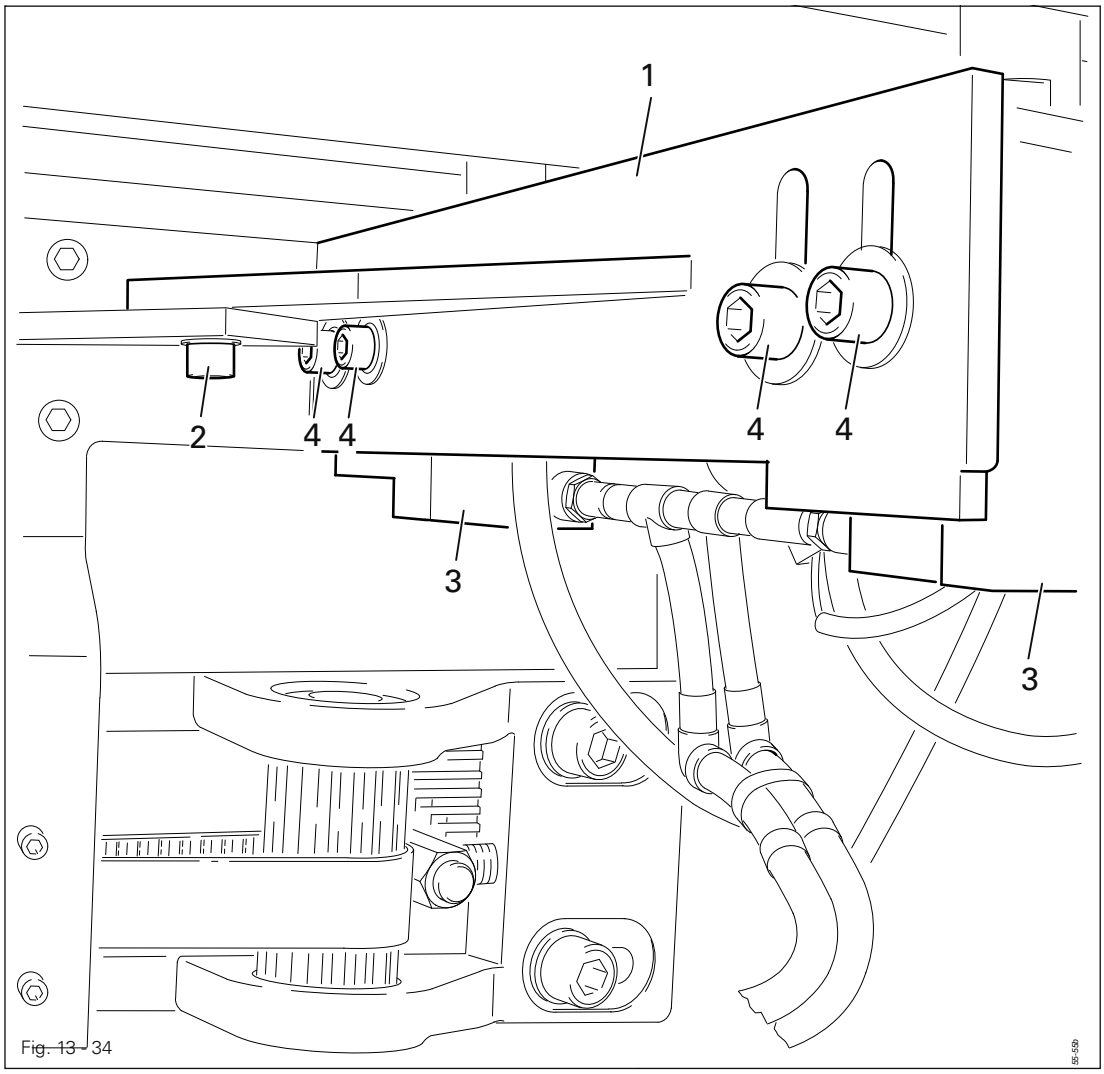

Fig. 13 - 34

- Swing bracket **1** (screw **2**) according to **requirement 1**.
- Adjust cylinder **3** (screws **4**) according to **requirement 2**.

13.06.05 Adjusting the belt tensions

Requirement

The belt tensions should be tested and adjusted with measuring device **5**.

1. The belt tensions of the clamp drive should be tested with a reading of **1100** Nm (belt width **50 mm**).
2. The belt tension of the clamp feeder should be tested with a reading of **550** Nm (belt width **25 mm**).

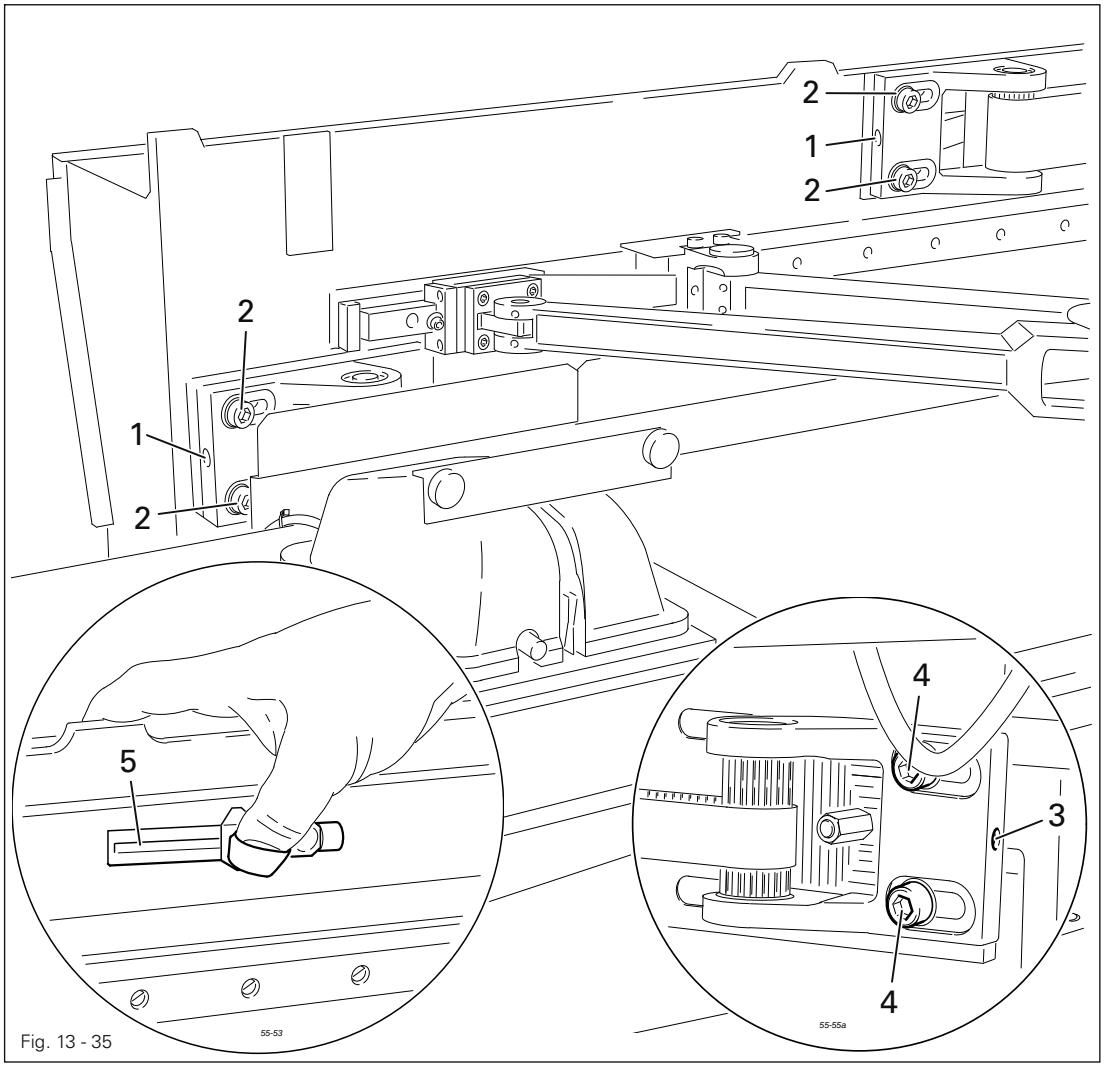

Fig. 13 - 35

- Adjust belt tensions of clamp drive with screws **1** (screws **2**) according to **requirement 1**.
- Adjust belt tensions of clamp feeder with screw **3** (screws **4**) according to **requirement 2**.

Information about the correct use of measuring device **5** can be found in the enclosed instructions for measuring device **5**.

13.06.06 Clamp drive reference points

Requirement
With the "reference points" function the clamp drive should move exactly to all reference points.

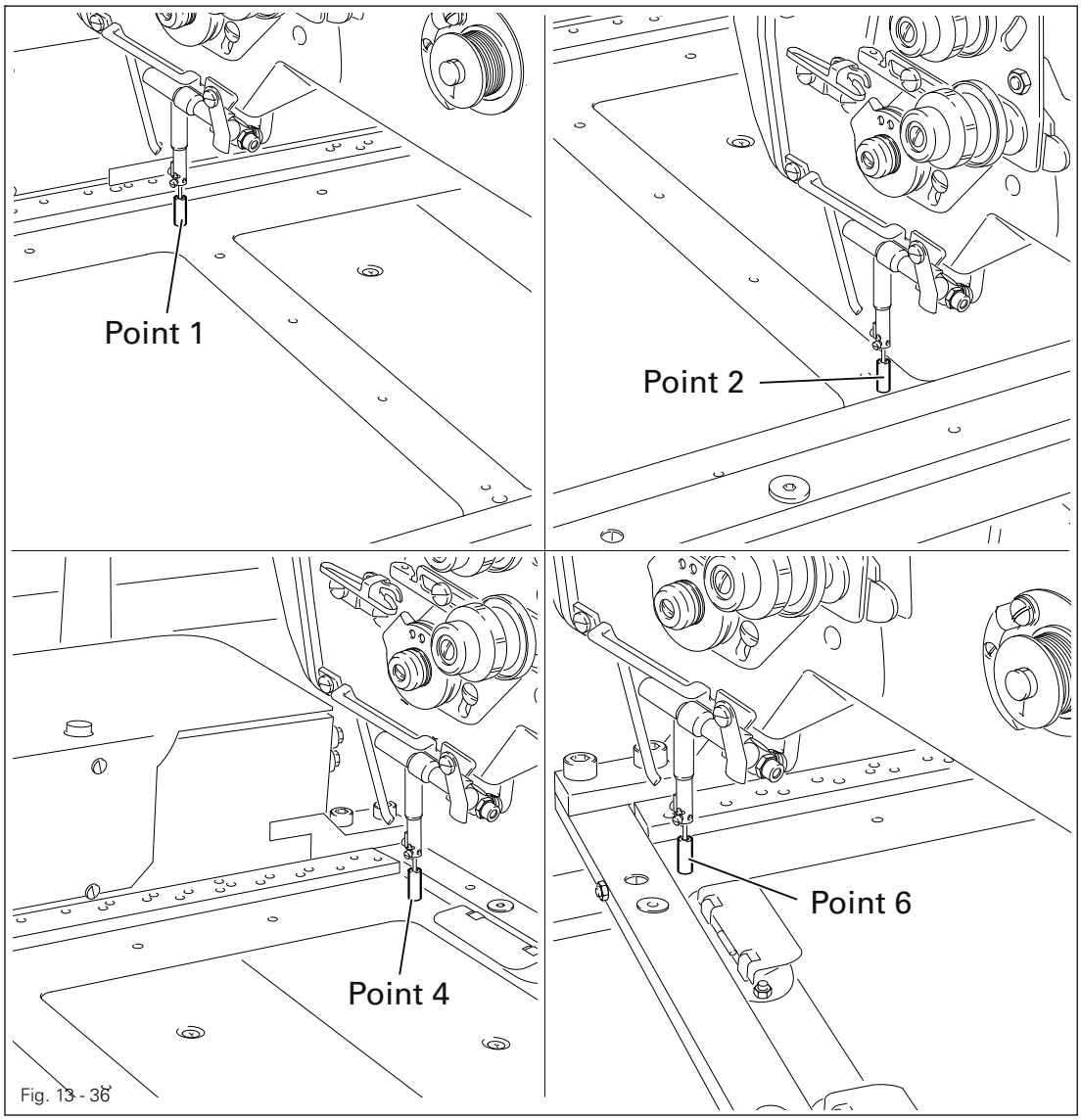

Fig. 13 - 36

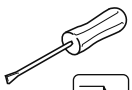

- Switch on the machine.



- Call up the input menu.

REF

- Call up the "reference points" function from the service functions.

Enter

- Insert clamp and press Enter.
- Move to point **1**.
- Move to all the reference points one after the other.

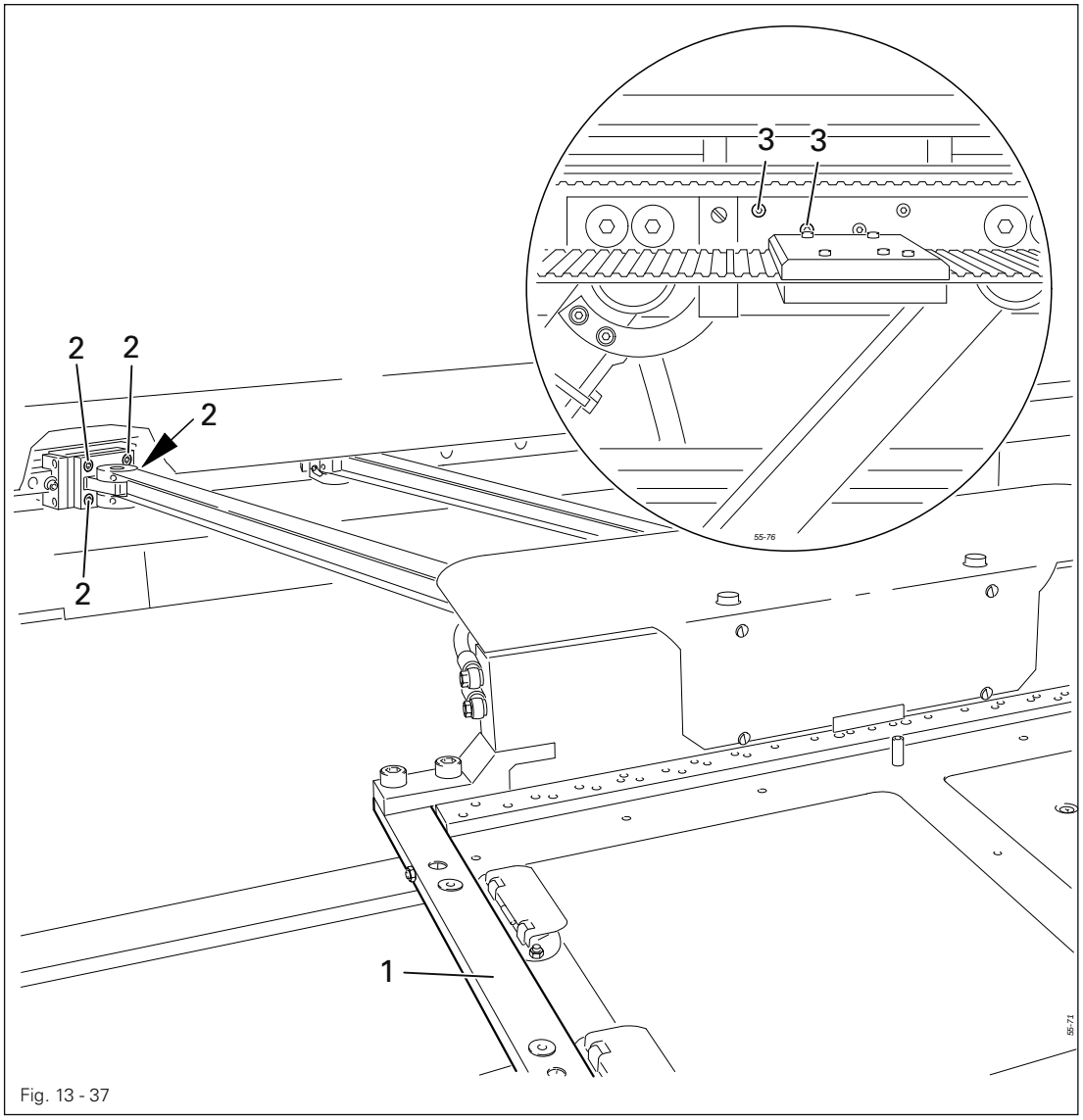

Fig. 13 - 37

Adjustment for lateral deviation between Point 1 and Point 2:

- Adjust clamp 1 (screws 2 and 3) according to the requirement.

Adjustment for linear deviation between Point 1 and Point 2:

- Adjust the zero points according to Chapter 8.09 Check/adjust zero points.

Adjustment for linear deviation between Point 4 and Point 6:

- Correct the increments with parameters "206" and "207" in accordance with the requirement.

After an increment correction the zero points must be checked and, if necessary, adjusted, see Chapter 8.09 Check/adjust zero points.

13.07 Service menu

The status of the digital and analog inputs is displayed in the service menu. The outputs can be set or reset manually. In addition it is also possible to call up functions for carrying out a cold start, for loading the operating program and for setting the control panel.

- Switch on the machine.



- Call up the input mode.



- Call up the service menu.

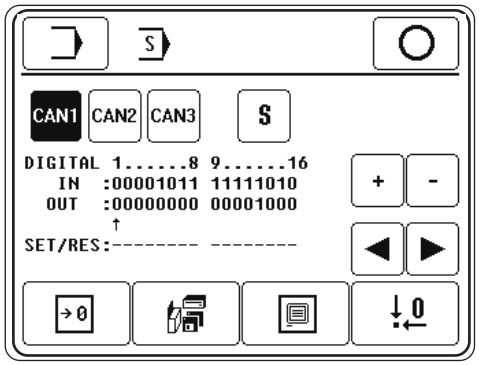

Explanation of the functions



Input mode
This function is used to change to the initial state of the input mode.



Conclude input
This function is used to conclude the input and change into the sewing mode.



Can-nodes
This function is used to select the required Can-node. The currently selected Can-node is shown as an inverse symbol.



Special outputs
This function is used to set or reset special outputs.

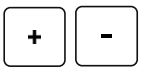

Plus/minus keys
These are used to set (+) or reset (-) the selected output.

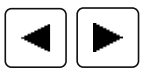

Arrow keys
These are used to select the desired outputs.

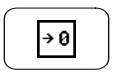

Cold start
This function is used to carry out a cold start, see Chapter **13.07.01 Cold start**.



Loading the operating program
This function is used to load the machine operating program, see Chapter **13.07.02 Loading/ updating the operating program.**

Control panel settings
This function is used to call up a menu for changing the display contrast and for switching the key tone on or off, see Chapter **8.08 Setting the control panel**.

Adjusting the zero points
This function is used to call up a menu for setting the zero points, see Chapter **8.09 Adjusting the zero points.**

13.07.01 Cold start

When a cold start is carried out, all newly created or altered programs, as well as all altered parameter settings are deleted!
The machine memory is deleted or set back to the status at the time of delivery.

- Switch on the machine and call up the input mode.
- Call up the service menu.
- Call up the cold start function.

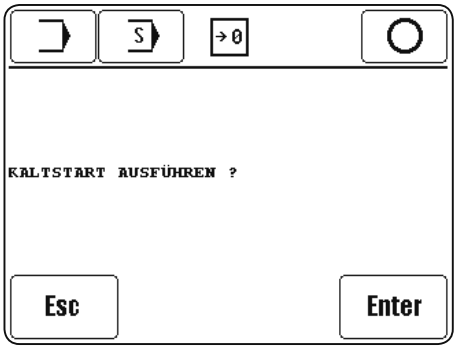

Enter
- Confirm that a cold start is to be carried out.

Explanation of further functions

Input mode
This function is used to change to the initial state of the input mode.

Service menu
This function is used to return to the service menu, see Chapter **13.23 Service menu**.

Conclude input
This function is used to conclude the input and change into the sewing mode.

Esc
Esc
The input is interrupted.

13.07.02 Loading / updating the operating program

To boot a new machine software, a sd-card with the needed files has to be plugged in the sd-slot of the control panel.

During the loading of the operating program all data in the machine memory is deleted!

- Switch on the machine and push the button "FORCE UPDATE".

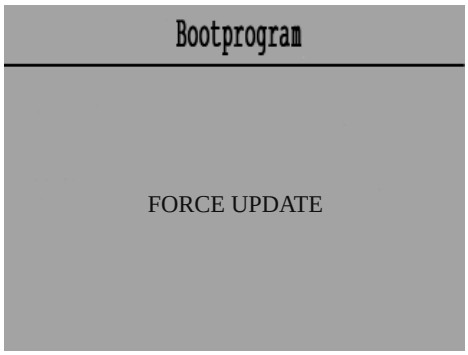

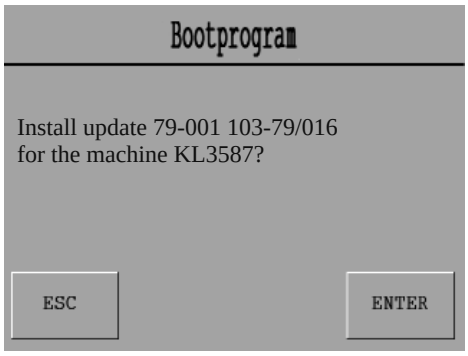

- Start the bootsequence with the key "ENTER".

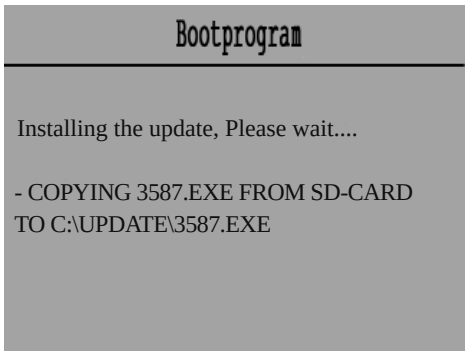

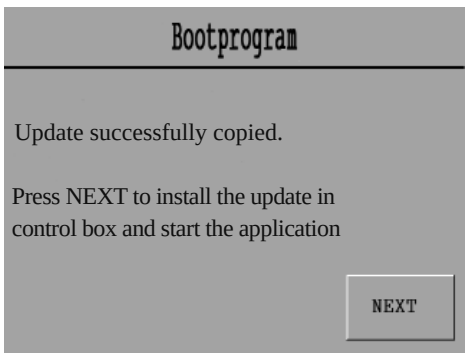

- To install the software, push the key "NEXT".

13.08 Sewing motor adjustments

- Switch on the machine.



- Call up the input mode.

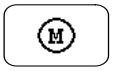

- Call up the seam program input function.

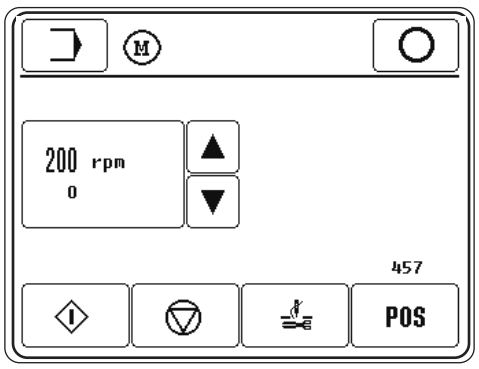

Explanation of the functions



Conclude input
This function is used to conclude the input and change into the sewing mode.

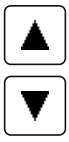

Speed adjustment
This function is used to increase or reduce the set speed.



Sewing motor start
This function is used to start the sewing motor with the set speed.



Sewing motor stop
This function is used to stop the sewing motor again.



Thread trimming cycle
This function is used to run the thread trimming cycle.



Needle function
The current actual position of the needle is displayed.
To set the t.d.c. position of the needle bar, bring the needle bar to the appropriate position by turning the balance wheel and take over this position by operating the "POS" key.

13.09 Parameter settings

All parameters which can be altered are shown in the list of parameters (Chapter 13.09.02). A description of how to select parameters and alter the values is given below.

13.09.01 Selecting and altering parameters.



- Switch on the machine and call up the input mode.



- Call up the parameter input function.

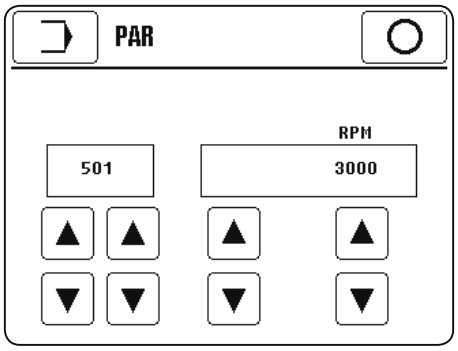

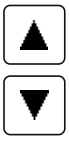

- Select the parameter separately by group (hundred figure) and parameter within the function group.

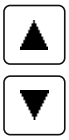

- Alter the value of the selected parameter.



- Quit parameter input function.

13.09.02 List of parameters

Group	Parameter	Description	Setting range	Set value
100	101	Bobbin thread monitor (0 = off; 1 = counter; 2 = sensor; 3 = sensor +stop)	0 - 3	1
	102	Needle thread monitor (0 = off; 1 = on)	0 -1	1
	103	Fade-out stitches needle thread monitor. The number of stitches, during which the needle thread monitor is not activated during sewing, is changed.	0 – 99	5
	104	Fade-out stitches bobbin thread monitor. The number of stitches, during which the bobbin thread monitor is not activated during sewing, is changed.	0 – 99	5
	105	Reaction time needle thread monitor. The sensitivity of the needle thread monitor is altered (1 = quickest reaction, max. sensitivity)	1 - 9	1
	106	Retracing stitches The number of stitches which are automatically retraced after a needle thread error, is changed.	0 - 99	15
	107	Automatic clamp opening 0 = off; 1 = on	0 - 1	0
	108	Flip-flop mode foot switch 0 = off; 1 = on	0 - 1	0
	109	Clamp monitoring 0 = off; 1= clamp monitoring; 2 = automatic program number selection	0 - 2	0
	110	Feeder 0 = off; 1 = on	0 - 1	0
	111	Clamp weight 0 <4.5 kg; 1> 4.5 kg The large clamp weight leads to reductions in speed.	0 - 1	0
	112	Material thickness 0 = standard; 1 = thick If thick material is selected, during sewing the machine works with a longer clamp stop; the speed is reduced	0 - 1	0
	113	Continuous carriage feed 0 = off; 1 = on	0 - 1	0

Group	Parameter	Description	Setting range	Set value
100	114	Automatic switch to next sequence 0 = off; 1 = on	0 - 1	1
	132	Number of stiches to open thread clamp	0 - 99	3
200	201	Thread puller 0= not fitted; 1 = fitted, thread pulling allways when thread cut 2 = fitted, thread pulling only when thread cut in sewing program	0 - 1	0
	202	Clamp monitoring 0 = not fitted; 1 = BCD; 2 = binary; 3 = Barcode	0 - 3	0
	203	Feeder, 0= not fitted; 1 = fitted	0 - 1	1
	204	Short thread trimmer 0= not fitted; 1 = fitted	0 - 1	0
	205	Monitoring sewing head down (E74) 0= not fitted; 1 = fitted	0 -1	0
	206	Increment correction Motor 1	-30 - +30	0
	207	Increment correction Motor 2	-30 - +30	0
	209	Machine typ 0 = Standard (with P200 and QE5542) 1 = Standard (with MMC1002 and QE5540)	0 - 1	0
300	301	NIS (carriage start) [°], see Chap. 13.09.03	80 – 150	110
	302	Take-up lever tdc [°]	70 – 90	75
	303	Position thread trimming on [°]Point, at which the impulse for thread trimming is sent to the thread trimming valve, is changed(° = degree after t.d.c. needle bar).	160 – 360	200
	304	Position thread trimming off [°]	Parameter 303 / 302	345
	305	Thread tension position [°]	5 - 20	15
	306	Thread tension position for short thread trimmer [°]	5 - 25	20
400	401	Thread clamp on [0.01 s] Delay time for opening thread clamp when sewing starts is changed.	10 – 256	0
	402	Thread puller [0.01 s] Duration of thread pulling is changed.	10 – 256	50
	403	Needle cooling [0.01 s] Duration of extra air cooling for needle after sewing stop is changed.	10 – 256	200

Group	Parameter	Description	Setting range	Set value
500	501	Reduced speed	200 - 3200	3000
	502	Cutting speed (positioning speed)	50 - 250	200
	503	Speed for slow start stitches	200 - 700	700
	504	Slow start stitches Number of stitches, which are to be sewn at reduced speed when sewing starts, is changed	0 – 99	2

13.09.03 Carriage start (NIS)

This function changes the time for starting the motors of the clamp drive (º = degree after t.d.c. needle bar).

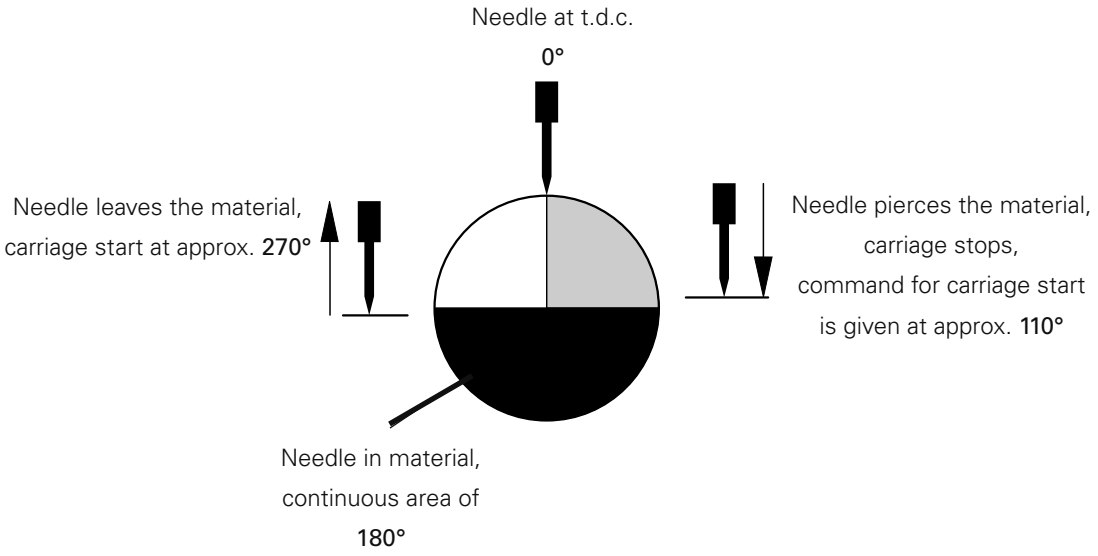

The command for the carriage start is given when the needle pierces the material. The carriage, however, starts half a revolution later (180º), when the needle leaves the material.

Under certain circumstances the stitch formation can be influenced by the setting.

14 Control

14.01 Basic setting / Diagnosis / Pin assignment

14.01.01 Basic control unit A20

In the factory, the basic control unit is equipped with the necessary operating and ramp software. This may only be replaced by appropriately trained personnel.

Pin locations

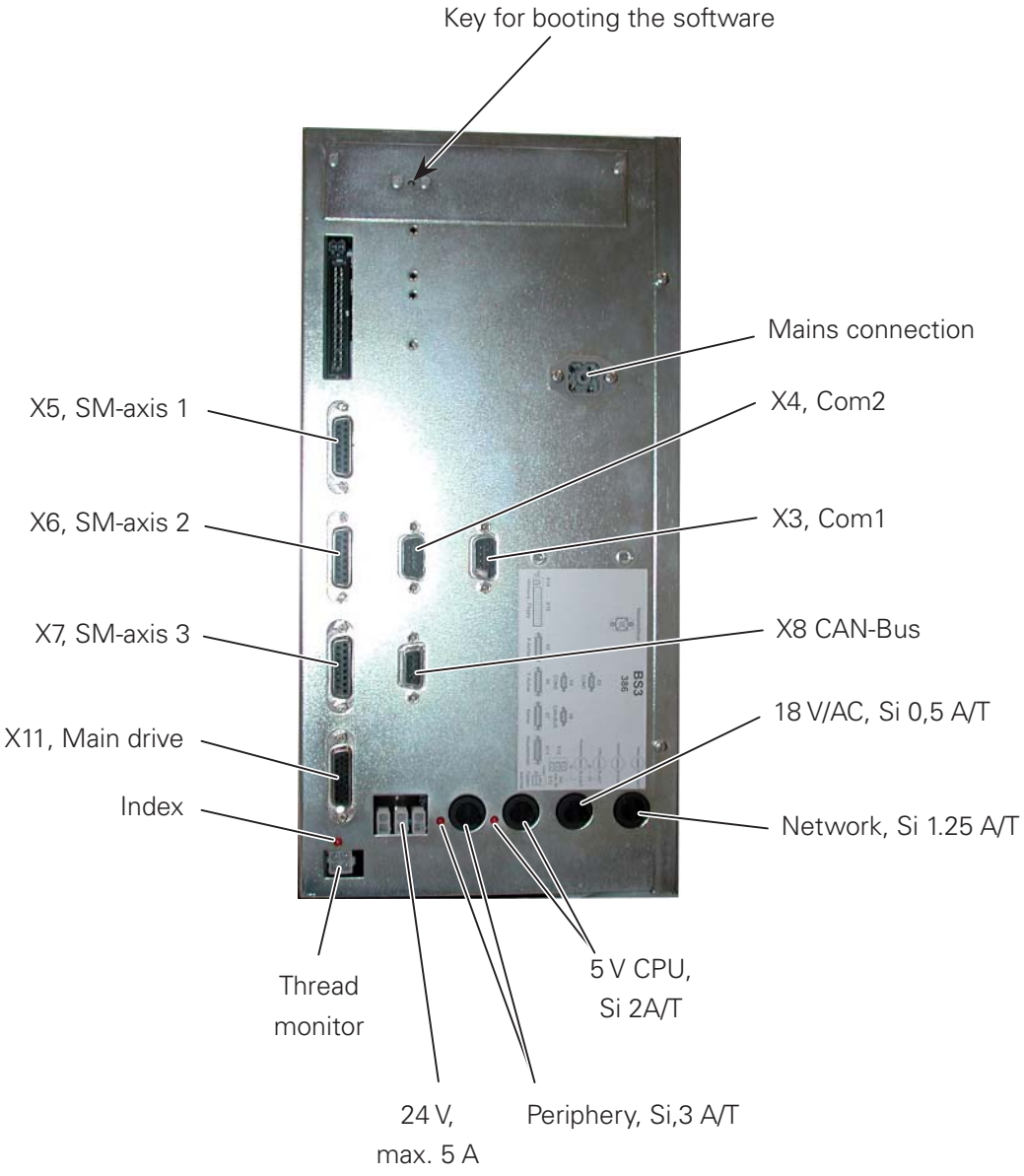

Operation indicators/Voltage supply

LEDs are provided on the top of the equipment for the various operating voltages (see adhesive label on the top side of the equipment).
These are LEDs for +5V, +24V and for the synchroniser index on the main drive unit.

Fuses

(see label)

Mains fuse	2.5 AT
+5 V supply	8 AT
+24 V supply	1.6 AT

Pin assignment

X3 (COM1) and X4 (COM2)			
PIN	**Signal**	**PIN**	**Signal**
1	Vterm1	6	bridged at PIN 4
2	RxD	7	RTS
3	TxD	8	CTS
4	bridged at PIN 6	9	Vterm2
5	GND		

X5 (X-axis/motor 1), X 6 (Y-axis/motor 2), X 7 (motor 3)			
PIN	**Signal**	**PIN**	**Signal**
1	Puls +	9	Puls -
2	Direction +	10	Direction -
3	Fkt1 +	11	Fkt1 -
4	Fkt2 +	12	Fkt2 -
5	Vex +	13	Vex -
6		14	Input2 -
7	Input2 +	15	Input1 -
8	Input1 +		

X8 (CAN-Bus)			
PIN	**Signal**	**PIN**	**Signal**
1	P8HA +	6	
2	P8HA -	7	
3	DoRi +	8	DoRi -
4	GND	9	GND
5			

X11 (Maindrive)			
PIN	Signal	PIN	Signal
1	Screening	14	A_A
2	TxD_A	15	A_B
3	RxD_A	16	B_A
4	TxD_B	17	B_B
5	RxD_B	18	I_A
6		19	I_B
7	GND	20	GND
8		21	A_OC
9	R1_A	22	B_OC
10	R1_B	23	I_OC
11	R2_A	24	V2
12	R2_B	25	GND
13	GND	26	Vex

14.01.02 Sewing drive A22



Before leaving the factory the sewing drive controller is equipped with the necessary operating software. This software may only be replaced by appropriately trained personnel.

The LED "Power on" shows that the unit is ready for operation. Diagnosis functions and fuses are not available. If error messages appear on the machine display, see **Chapter 14.02.04 Sewing motor errors.**

Pin assignment

X1 (Sychronizer) X7 on the MMC 1002			
PIN	Signal	PIN	Signal
1	FA	6	
2	FB	7	
3	SM	8	
4	ADTC1	9	GND
5	+ 5V		

X2 (Commutating signal generator)			
PIN	Signal	PIN	Signal
1		6	KA
2		7	KB
3		8	KC
4	ADTC2	9	GND
5	+ 5V		

X3 (Interface) X5 on the MMC 1002			
PIN	Signal	PIN	Signal
1	GND	14	A
2	TxD	15	A\
3	RxD	16	B
4	TxD\	17	B\
5	RxD\	18	Index
6		19	Index\
7	GND	20	
8		21	
9	REF1	22	
10	REF1\	23	
11	REF2	24	
12	REF2\	25	
13	GND	26	

X6 (Mains)			
PIN	Signal		
1	PE		
2	N		
3	L1		

X14 (Motor) X1 on the MMC 1002			
PIN	Signal		
1	PE		
2	U		
3	V		
4	W		

14.01.03 Stepping motor drive A21

The stepping motor controller has the following initial setting:

DIP-switch

OFF	ON	
*		Step no.: **1000**
*		Step no.:
*		Current reduction active
*		Enable

Rotary switch

B Position B ==> phase current 5.4 A

For information about LED status indications see Chapter **14.02.03 Errors - Stepping motor drive.**

Pin assignment

X5 (Stepping motor 1) or X6 Stepping motor 2)			
PIN	Signal	PIN	Signal
1	Puls +	9	Puls -
2	Direction +	10	Direction -
3	Gate/Enable +	11	Gate/Enable -
4	Current control +	12	Current control -
5		13	
6		13	
7		15	Ready -
8	Ready +		

14.01.04 Feed motor drive

The feed motor drive is set or programmed by the manufacturer for the requirements of this machine. A replacement is only permissible with programmed drives.

Operating signals

LED H1 (yellow)	LED H2 (green)	Meaning
off	off	Power off – no function
on	off	Power on, ready for operation after approx. 0.5 s self-test
off	on	Drive has been started
on	on	Overload protection active
flashing	off	see Chapter **14.02.06 Errors feeder motor drive**

14.01.05 AC-Line-Controller

The AC-Line-Controller is set in the factory to the requirements of this machine. An exchange is only permissible after prior adjustments.

Default setting

Potentiometer	Value
UL (upper limit)	260V
LL (lower limit)	195V
off Delay	Min

Operation displays

LED H1 (green)	LED H1 (red)	Discription
off	off	line off, no function
on	off	machine functional, voltage outside the set range
on	on	machine functional, voltage within the set range

14.02 Description of the error messages

14.02.01 General errors

Display	Description
ERROR: 3	Error in allocation EMS memory
ERROR: 4	C167 not reacting
ERROR: 5	Boot file (c167boot.bin) cannot be opened
ERROR: 6	Error in flash-programming
ERROR: 7	Error when opening a file
ERROR: 8	Battery
ERROR: 9	Firmware version conflict
ERROR: 10	CAN-error (reset)
ERROR: 11	CAN-error (no. of nodes)
ERROR: 12	Communication main drive
ERROR: OPERATING DATA CHECK SUM (COLD START CARRIED OUT)	Operating data check sum
NEW OPERATING SOFT-WARE (COLD START CAR-RIED OUT)	New operating software
COLD START CARRIED OUT	Cold start
ERROR: 13	CAN node feed attached, feed not configured
ERROR: 14	CAN node for feed missing
ERROR: 15	Communication Barcode-reader
ERROR: 16	Main drive changed
ERROR: 101	C167-error
ERROR: 102 (#node no.)(status)	CAN-error, status = Bit1 - node inactive, Bit 8 - short circuit
ERROR: 103	End stage (SmX)
ERROR: 104	End stage (SmY)
ERROR: 105	Error compressed air
ERROR: 201 (#sewing mo-tor error)	Sewing motor error (see Chapter 14.02.04 Sewing motor errors)
ERROR: 210	Command byte of NM-interface not free,command could not be given
ERROR: 211	Coordinates outside the sewing area
ERROR: 212	Stitch length too long
ERROR: 213	Carraige initiators not found
ERROR: 214	Clamp not inserted or incorrectly inserted
ERROR: 215	Ramp not completed
ERROR: 216	Thread not cut (Clamp cannot be opened)

Display	Description
ERROR: 217	No clamp inserted, program number could not be read
ERROR: 218	Invalid program number
ERROR: 219	Wrong clamp
ERROR: 220	Incorrect clamp code
ERROR: 221	No carriage start (NIS)
ERROR: 222	Scan clamp code with barcode scanner
ERROR: 240 (cause)	Move to starting point blocked
ERROR: 241 (cause)	Move to Home blocked
ERROR: 242 (cause)	Move to feeder hand-over position blocked
ERROR: 243 (cause)	Move from seam end to feeder take-over position blocked
ERROR: 244 (cause)	Move to machine zero point blocked
ERROR: 245 (cause)	Moving in sewing program blocked
ERROR: 246 (cause)	Tacting blocked
ERROR: 247 (cause)	Move to feeder take-over position blocked, during threding
ERROR: 251	Remove fee clamp
ERROR: 252	Scan clamp code with barcode scanner
ERROR: 281	Hardware-error Com 1 (scanner interface)
ERROR: 301	Carriage position invalid
ERROR: 302	Needle position (carriage) invalid
ERROR: 303	Invalid hand-over position
ERROR: 304	Invalid take-over position
ERROR: 305	Configuration invalid
ERROR: 306	Needle position (t.d.c.) invalid
ERROR: 307	Feeder engaged -> switch-off
ERROR: 308	Machine not in basic position
ERROR: 309	Clamp monitoring unit not fitted
ERROR: 310	File not on source
ERROR: 311	Source reading error, file cannot be opened
ERROR: 312	Target writing error, file cannot be opened
ERROR: 313	Source reading error
ERROR: 314	Target writing error
ERROR: 315	File configuration cannot be opened
ERROR: 316	Error when opening MDAT-file
ERROR: 317	Writing error in MDAT-file
ERROR: 318	Machine data identification incorrect
ERROR: 319	Reading error in MDAT-file
ERROR: 320	Prog. with incorrect machine class
ERROR: 321	Prog. with incorrect machine version
ERROR: 322	Prog. with incorrect data set version
ERROR: 323	Incorrect program number
ERROR: 324	No carriage start, NIS

Display	Description
ERROR: 325	Memory overflow when writing file to flash
ERROR: 326	Flash writing error
ERROR: 327	Image leaves sewing error
ERROR: 328	Block not marked or incorrectly marked
ERROR: 329	Program too large
ERROR: 330 (#Stitch generation error) (#Section number)	Conversion error
ERROR: 331	Stitch too large
ERROR: 332	Check-point not permitted
ERROR: 341 (#sewing motor error)	Sewing motor error, (see Chapter 14.02.04 Sewing motor errors)
ERROR: 342 (# program number)	Program incomplete
ERROR: 343 (# program number)	Program too large
ERROR: 344 (# program number)	Program does not exist
ERROR: 345 (# program number)	Flash reading error or program defective
ERROR: 401	Text file cannot be opened
ERROR: 402	Error when reading text file
ERROR: 403	Error in allocation of storage space for texts
ERROR: 501	Error when opening file "pikto.hex" or "vorlagen.hex"
ERROR: 502	No acknowledgement from control panel

14.02.02 CAN-errors

Error byte	Description
bit7	End stage error (short circuit)
bit6	-
bit5	-
bit4	Receive status (waiting for input object)
bit3	Transmit status (transmit output object)
bit2	Transmit status
bit1	Node time out
bit0	Node active

14.02.03 Stitch generation error

Display	Description
1	Incorrect machine identification
2	Section "clamp code" or section "obstacle" missing or on wrong place
3	Increment too large
4	Program end without thread trimming
5	Impermissible stitch length data
6	Incorrect element in geometrical data set
7	Quick motion although machine is sewing
8	Impermissible stitch length data
9	Impermissible stitch length data
10	Circle check-point = circle end point
11	Division by zero
12	Impermissible stitch length data
13	No coordinates section before curve check-point
14	Sewing area limit exceeded
15	Curve without end point
16	Mach. function buffer overflow
17	Start sewing command in loading point program
18	Incorrect curve check-point
19	Incorrect curve check-point
20	Incorrect curve check-point
21	Incorrect curve check-point
22	Stitch length not initialised
23	Loading point program not ended
24	Stitch width command in loading point program
25	Impermissible value for section stitch??
26	Cutting command, although thread cut
27	Start sewing command, although machine sewing
28	Cutting command in sewing-off-area
29	Sewing-off command, although thread cut
30	Cutting command directly after start sewing command
31	Start bartack too long

14.02.04 Sewing motor errors

Display	Description
1	Transmission error
2	Timeout serial interface
3	Check sum error in incoming data
4	Timeout command
30h (48)	Timeout-slave expired (command string incomplete)
31h (49)	Incorrect command code
32h (50)	Framing or parity error
33h (51)	Check sum incorrect
34h (52)	Incorrect date request
35h (53)	No parameter programmable (motor operation)
36h (54)	Parameter does not exist
37h (55)	Incorrect parameter value
38h (56)	EEPROM being programmed
39h (57)	Incorrect machine speed
3Ah (58)	Incorrect position
3Bh: (59)	Path for guided positioning too short
3Ch: (60)	Reset of position counter not possible (motor running)
3Dh: (61)	Turning to tdc after mains on not permitted
3Eh: (62)	System mark not recognised
3Fh: (63)	Target position < 3 incr. away from count position
40h - 4Fh -	
50h: (80)	Network control (failure of 2 network half waves)
51h: (81)	Error power electronics during initialization
52h: (82)	Short circuit in motor
53h: (83)	Mains voltage off recognized
54h: (84)	Error power electronics in operation
55h: (85)	No increments
56h: (86)	Motor blocked
57h: (87)	Commutation transmitter connector missing
58h: (88)	Increment transmitter connector missing
59h: (89)	Fault in motor running (target speed not reached)
5Ah: (90)	-
5Bh: (91)	Regulating algorithm blocked
5Ch - 69h -	
6Ah: (106)	EEPROM not programmable
6Bh: (107)	EEPROM missing
6Ch: (108)	Master reset carried out
6Dh: (109)	-
6Eh: (110)	Residual path for path-controlled, guided delay ramp too short
6Fh: (111)	Slave has received 5 successive garbled messages
70h: (112)	Time-out over
71h - FFh -	

14.02.05 Errors – Stepping motor drive

If problems occur with the stepping motor drive during the operation, an error might have occurred in the stepping motor controller.
The error message is indicated by LEDs on the stepping motor controller.

LED	Meaning
01 ROT. ERROR	goes out when - the motor blocks - the stepping motor amplifier is not ready - the Enable input is not activated - a breakage has occurred in the supply and/or blocking detection line
06 READY	is lit up when - the amplifier is driven correctly - the supplied voltage is in the rated range
07 FAULT	lights up if a short-circuit occurs between two motor phases
08 TEMP	lights up if the temperature at the cooling device is too high (>75°C)
09 OVER-VOLT	lights up if there is an over-voltage (>400 V) during braking
10 LOW-VOLT	lights up if there is a low voltage (< 200 V)
09 + 10	are lit if the Enable input is not activated

14.02.06 Error – Feeder motor drive

If problems arise during the operation of the feeder motor drive, the motor controller may be switched to fault. In this case there is an error message in the form of a flashing LED in the motor controller.

H1(yellow) flashes	Condition / cause	Correction / Comment
once |_____|_____	processor error	switch the mains off and back on again (reset)
twice ||_____||_____	power off low voltage	flashes until UZK< 65 V automatic reset
three times |||_____|||_____	power off due to overcurrent I >180% I_N short circuit	check drive / motor cable
four times ||||_____||||_____	overcurrent or motor acts as generator	check mains, check drive
five times |||||_____|||||_____	I*t power off motor	motor overloaded, check drive
six times ||||||_____||||||_____	I*t power off frequency converter	frequency converter overloaded, check drive
seven times |||||||_____|||||||_____	motor temp. too high	check bridge X5/10-11, motor overloaded
eight times ||||||||_____||||||||_____	frequency converter temp. too high	frequency converter overloaded, check installation conditions
nine times ||||||||_____||||||||_____	error in the EEPROM	switch mains off and on again (Reset)

14.03 List of outputs and inputs

14.03.01 CAN-nodes 1

Output	Term	Function	Remark
OUT1	Y1	Vibrating presser down	Valve
OUT2	Y2U1	Raise sewing head	Impulse valve
OUT3	Y2U2	Lower sewing head	Impulse valve
OUT4	Y3	Blower needle cooling on	Valve
OUT5	Y4	2nd level vibrating presser on(prog. output 5)	Valve
OUT6	Y5	Thread puller on (optional)	Valve
OUT7	Y6	Secondary thread tension on	Valve
OUT8	Y7	Thread trimmer on	Valve
OUT9	Y8	Bobbin cover open	Valve
OUT10	Y9	Balance wheel brake off	Valve
OUT11	Y10	Thread clamp open	Valve
OUT12	Y11U1	Clamp open	Impulse valve
OUT13	Y11U2	Clamp closed	Impulse valve
OUT14	Y12	Hook lubrication on	Valve
OUT15	K20	Thread tension open	Solenoid
OUT16	bobres	Reset bobbin thread monitor	Dig. signal

Input	Term	Function
IN1	IN1	Prog. input 1
IN2	IN2	Prog. input 2
IN3	IN3	Prog. input 3
IN4	IN4	Prog. input 4
IN4	e5	Basic position thread puller (option)
IN5	e1	Vibrating presser up
IN6	e2u1	Sewing head raised
IN7	e2u2	Sewing head lowered
IN8	e8	Bobbin cover closed
IN9	e30	Clamp inserted right
IN10	e31	Clamp inserted left
IN11	e32	Small vibrating presser lift
IN12	ac_ok	Undervoltage monitoring
IN13	press	Compressed air ok
IN14	fkey	Key (for secured functions)
IN15	foot1	Foot-switch 1st stage
IN16	foot2	Foot switch 2nd stage

14.03.02 CAN-nodes 2

Output	Term	Function	Remark
OUT1	Out1	Prog. output 1	Dig. Signal
OUT2	Out2	Prog. output 2	Dig. Signal
OUT3	Out3	Prog. output 3	Dig. Signal
OUT4	Out4	Prog. output 4	Dig. Signal
OUT5	Y14	Bobbin thread clamp closed	Valve
OUT6			
OUT7			
OUT8			
OUT9			
OUT10			
OUT11			
OUT12			
OUT13			
OUT14			
OUT15			
OUT16			

Input	Term	Function
IN1	therr	Needle thread error
IN2	boberr	Bobbin thread error
IN3	sm1limit	Zero position SM1
IN4	sm2limit	Zero position SM2
IN5	e34	Counter presser down
IN6	e35	Temperature monitor (operated ok)
IN7	e72	Stop key
IN8	demo	Demo run
IN9	jigcode	Clamp code Bit 0
IN10	jigcode	Clamp code Bit 1
IN11	jigcode	Clamp code Bit 2
IN12	jigcode	Clamp code Bit 3
IN13	jigcode	Clamp code Bit 4
IN14	jigcode	Clamp code Bit 5
IN15	jigcode	Clamp code Bit 6
IN16	jigcode	Clamp code Bit 7

14.03.03 CAN-nodes 3

Output	Term	Function	Remark
OUT1	Y50U1	Lower take-over clamp	Impulse valve
OUT2	Y50U2	Raise take-over clamp	Impulse valve
OUT3	Y51	Take-over clamp open	Valve
OUT4	Y52U1	Feed pins up	Impulse valve
OUT5	Y52U2	Feed pins down	Impulse valve
OUT6	Y53	Clamp retainer closed	Valve
OUT7	str	Start feeder motor clock-wise	Dig. signal
OUT8	stl	Start feeder motor anti-clockwise	Dig. signal
OUT9	s1ind	Feeder motor frequency 1	Dig. signal
OUT10	S2ind	Feeder motor frequency 2	Dig. signal
OUT11	H70	Lamp start key (pre-start)	Lamp
OUT12	uecheckdis	Disable for monitoring of clamp take-over	Dig. signal
OUT13			
OUT14			
OUT15			
OUT16			

Input	Term	Function
IN1	e50u1	Take-over clamp down
IN2	e50u2	Take-over clamp up
IN3	e51u1	Take-over clamp open
IN4	e51u2	Take-over clamp closed
IN5	e52	Feed pins down
IN6	e53	Clamp retainer closed
IN7	e60	Feeder take-over pos. brake (pins left)
IN8	e61	Feeder take-over pos. end position (pins left)
IN9	e62	Feeder hand-over pos. brake (pins right)
IN10	e63	Feeder hand-over pos. end position (pins right)
IN11	e70	Feeder start key
IN12	e71	Feeder stop key
IN13	e73	Key for position fade-out with autom. program number selection
IN14		opt. reserved for e65: Monitoring area photo sensor (spec. CAN-nodes)
IN15		opt. reserved for e64: Obstacle recognized (spec. CAN-nodes)
IN16	e74	Photo sensor for monitoring hand area during lowering of sewing head

14.03.04 Special outputs

Term	Funktion	Remark
S1	Thread puller function	
S2	Thread clamp function	
S3	Feeder in hand-over pos. (pins right)	
S4	Feeder in take-over pos. (pins left)	

14.04 Boot key

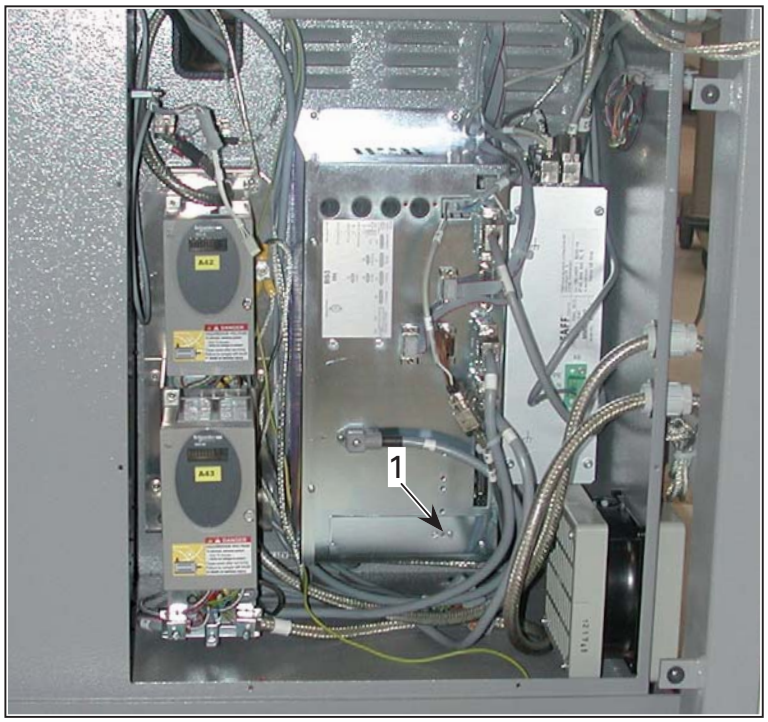

This work may only be carried out by properly instructed personnel!
Do not touch any live parts!
Danger to life through electric voltage!

15 Pneumatics-switch diagram

The control elements and valves are in the machine's basic position.Main switch -ON, compressed air -ON

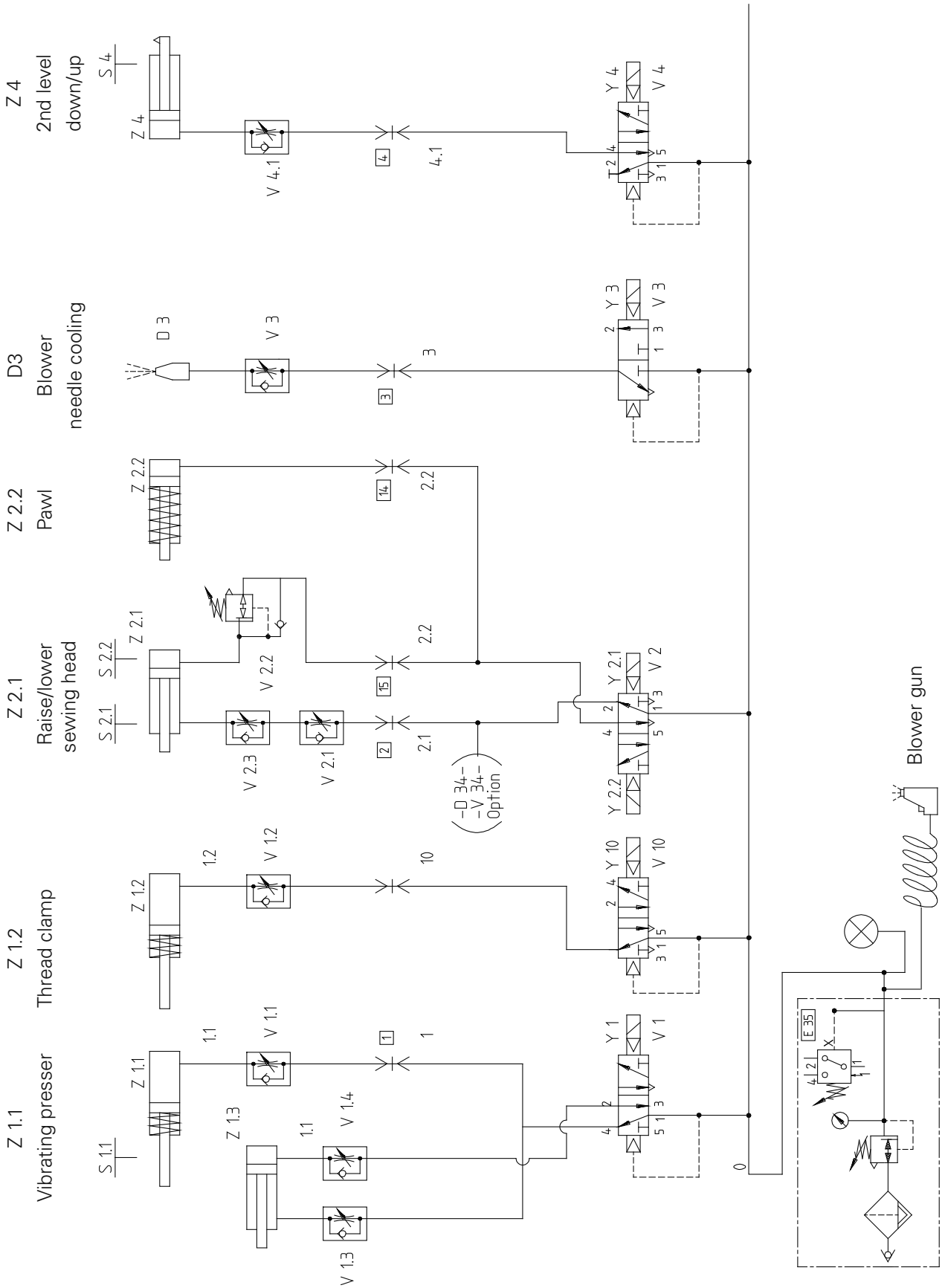

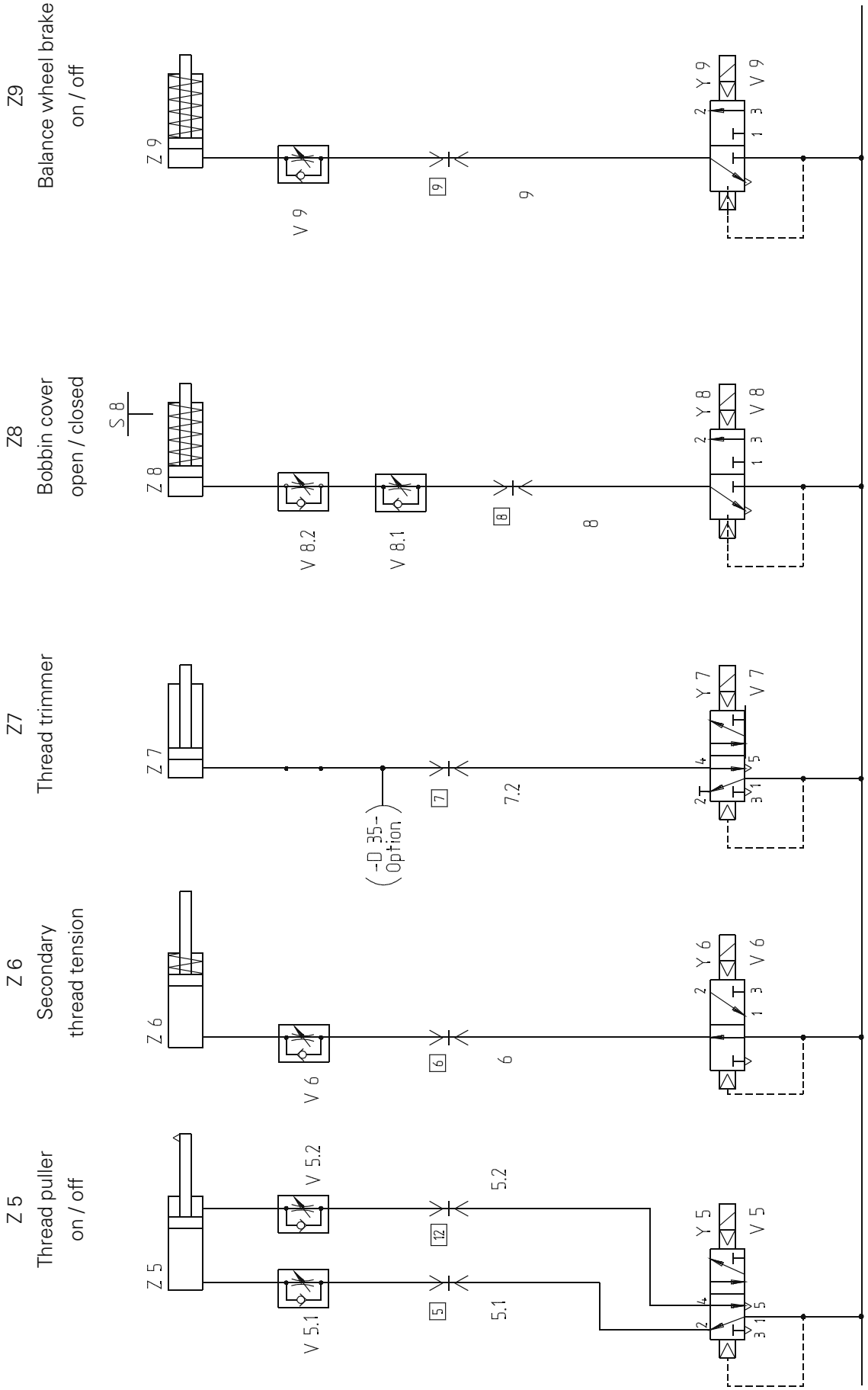
Z9
Balance wheel brake
on / off
Z 9
V 9
9
Y 9
V 9
Z8
Bobbin cover
open / closed
S 8
Z 8
V 8.2
V 8.1
8
Y 8
V 8
Z7
Thread trimmer
Z 7
-D 35-
Option
7
7.2
Y 7
V 7
Z 6
Secondary
thread tension
Z 6
V 6
6
Y 6
V 6
Z 5
Thread puller
on / off
Z 5
V 5.2
V 5.1
12
5
5.2
5.1
Y 5
V 5

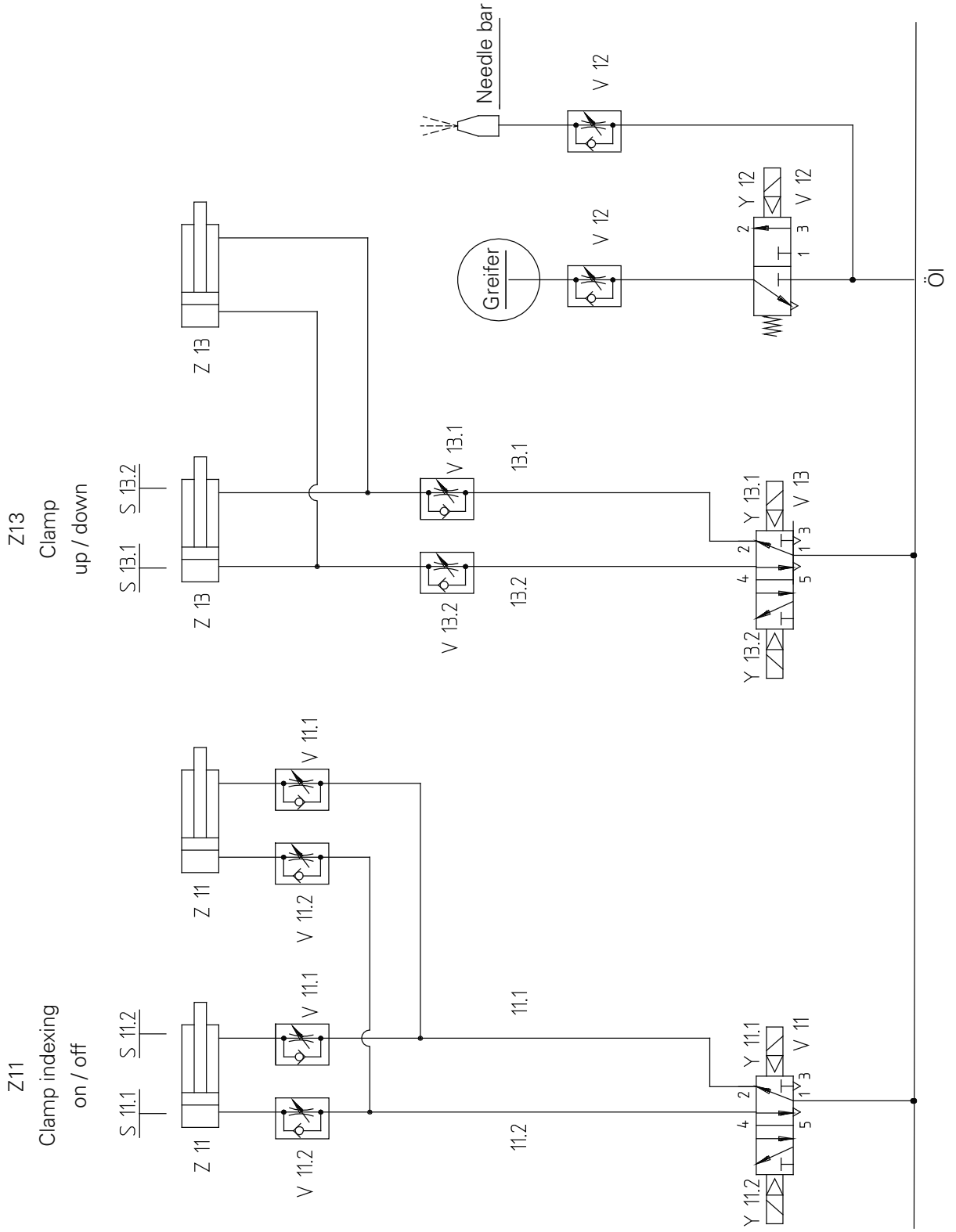
Needle bar
V 12
Greifer
V 12
Y 12
V 12
ÖI
Z13
Clamp
up / down
S 13.2
S 13.1
Z 13
Z 13
V 13.1
V 13.2
13.1
13.2
Y 13.1
V 13
Y 13.2
Z11
Clamp indexing
on / off
S 11.2
S 11.1
Z 11
Z 11
V 11.1
V 11.2
V 11.1
V 11.2
11.1
11.2
Y 11.1
V 11
Y 11.2

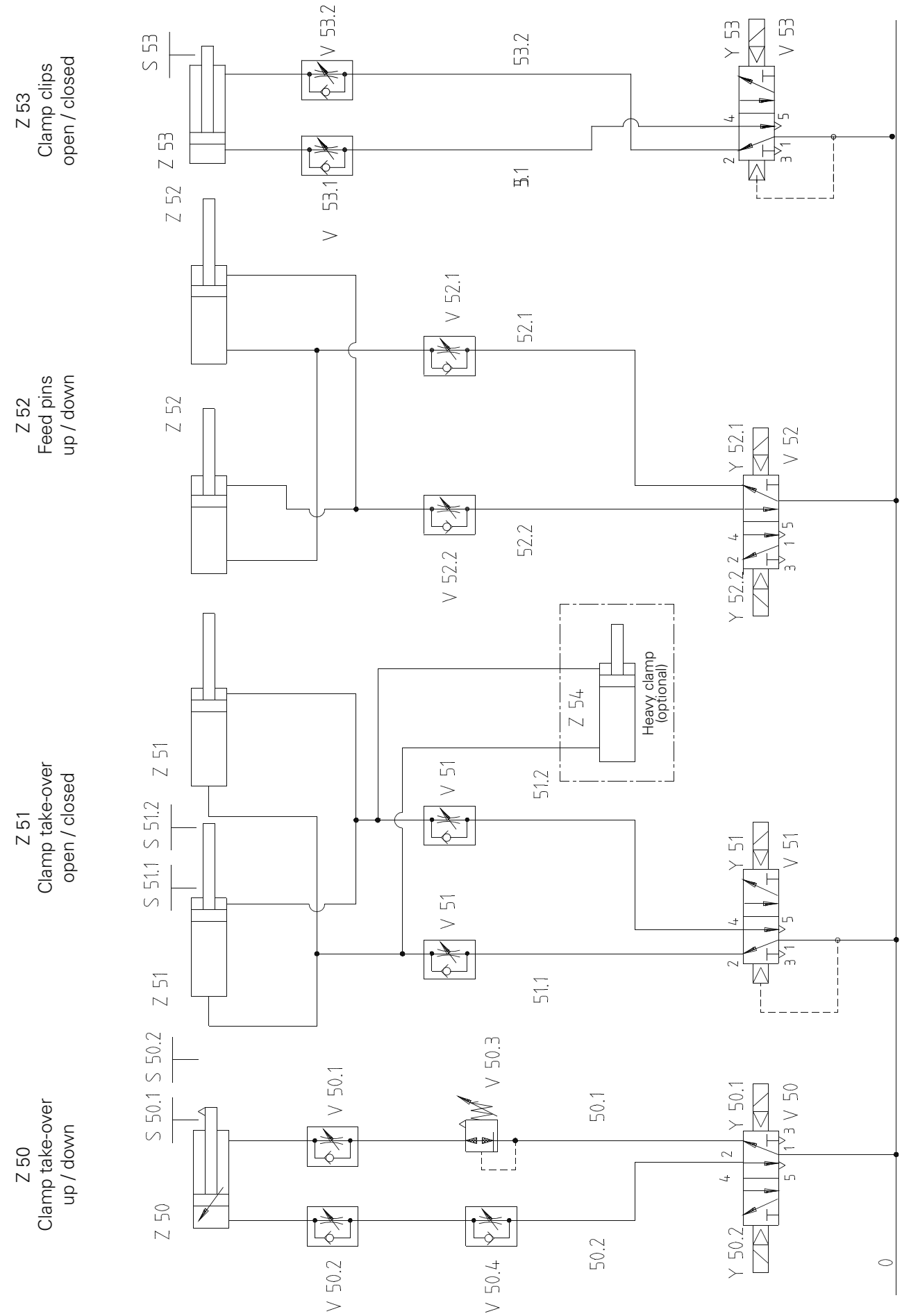
Z 53
Clamp clips
open / closed
Z 52
Feed pins
up / down
Z 51
Clamp take-over
open / closed
Z 50
Clamp take-over
up / down
S 53
Z 53
V 53.2
V 53.1
53.2
53.1
Y 53
V 53
Z 52
V 52.1
52.1
V 52.2
52.2
Y 52.1
V 52
Y 52.2
Z 54
Heavy clamp
(optional)
51.2
S 51.2
S 51.1
Z 51
V 51
51.1
Y 51
V 51
S 50.2
S 50.1
V 50.3
V 50.1
50.1
Z 50
V 50.2
V 50.4
50.2
Y 50.1
V 50
Y 50.2
0

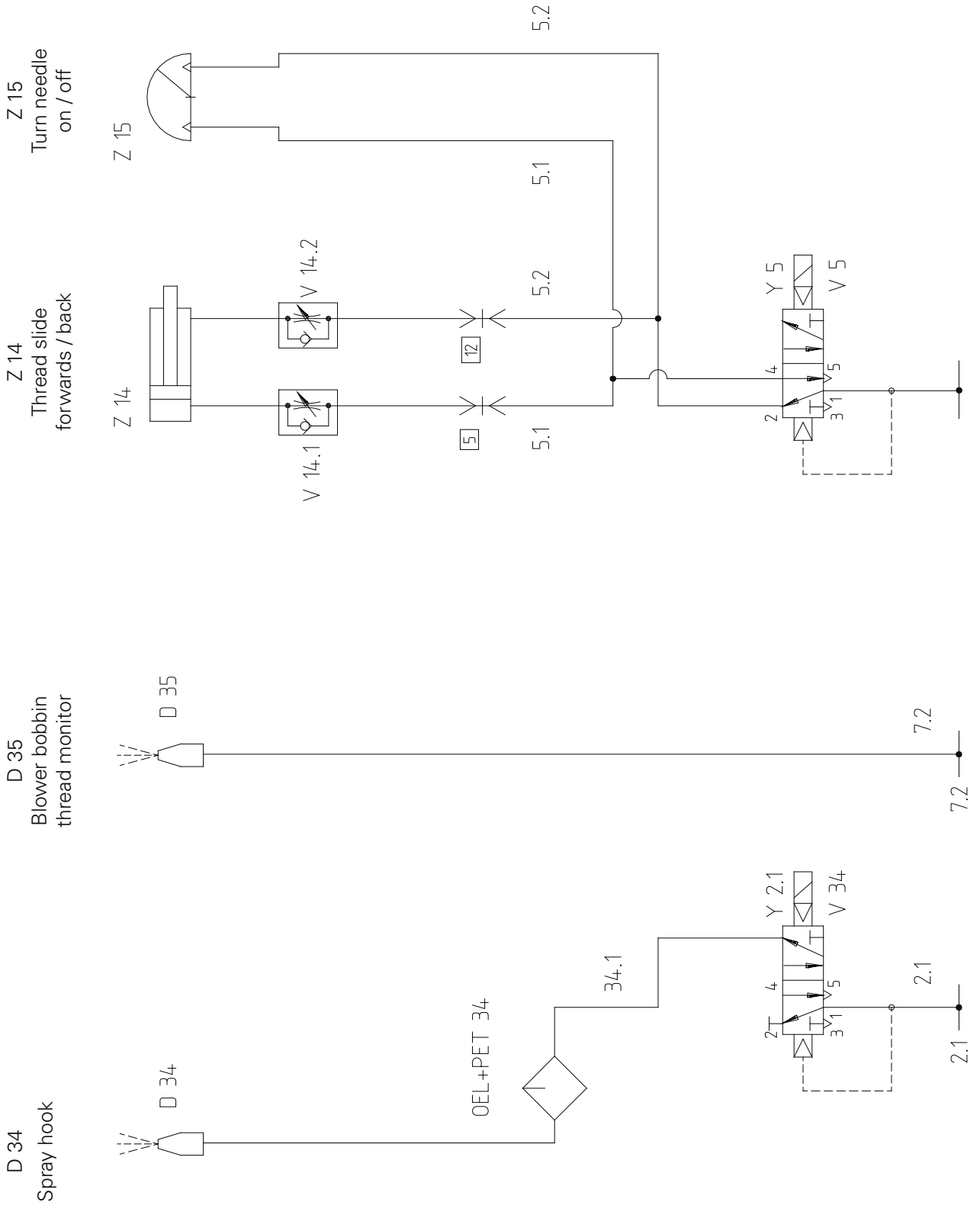
Z 15
Turn needle
on / off
Z 15
5.2
5.1
Z 14
Thread slide
forwards / back
Z 14
V 14.2
V 14.1
12
5
5.2
5.1
Y 5
V 5
4
2
5
3
1
D 35
Blower bobbin
thread monitor
D 35
7.2
7.2
D 34
Spray hook
D 34
OEL+PET 34
34.1
Y 2.1
V 34
4
2
5
3
1
2.1
2.1

16 Circuit diagrams

Reference list for circuit diagrams

M1	Stepping motor 1
M2	Stepping motor 2
M3	Sewing motor
M7	Ventilator control box
M8	Ventilator control box
M9	Ventilator control box
A11	CAN node 1
A12	CAN node 2
A13	CAN node 3
A20	Controller BS 3
A22	Sewing motor, end phase,
A24	Needle thread monitor evaluation
A25	Needle thread monitor sensor
A26	Control panel
A28	Bobbin thread monitor evaluation
A29	Bobbin thread monitor sensor
A42+A43	Step motor power amplifier Rotary switch motor current, setting B = 5.4.A
	1 DC bus live 2 Operational, power amplifi er authorised, motor live 3 Short circuit between 2 motor phases or against protective earth 4 Static = excessive power amplifi er temperature, blinking = excessive motor temperature 5 Overvoltage (DC bus > 420VDC) 6 Undervoltage (DC bus > 180VDC) 7 Error message on rotation monitoring 8 Encoder connected and operational 5+6 Power amplifi er deactivated, motor currentless 3 - 6 Frequency too high at signal point
K1	Start inhibitor sewing motor
K2	Start inhibitor stepping motors/sewing motor
K20	Thread tension released
K54	Voltage supervision relay
H70	Lamp start key (pre-start)
Z1	Line filter
Q1	On/off switch
	Parts feeder optional
M4	Motor feeder
A13	CAN node 3
A60	Frequency converter
K55	Relay

Inputs machine	
E1	Vibrating presser up
E2.1	Sewing head raised
E 2.2	Sewing head lowered
E8	Bobbin cover closed
E10	Linkage monitoring
E13.1	Clamp raised (optional)
E13.2	Clamp lowered (optional)
E30	Clamp inserted right
E31	Clamp inserted left
E32	Small vibrating presser stroke
E33	Reduced speed
E34	Counter presser
E35	Temperature monitor
E70	Stop key
E72	Start key
ac_ok	Untervoltage monitoring
boberr	Bobbin thread error
fkey	Key for secured functions
foot 1	Foot switch **1st** stage
foot 2	Foot switch **2nd** stage
press	Compressed air OK
sm1limit	Zero position SM **1**
sm2limit	Zero position SM **2**
therr	Needle thread error
In 1	Programmable input **1**
In 2	Programmable input **2**
In 3	Programmable input **3**
In 4	Programmable input **4**
Inputs feeder optional	
E50.1	Feeder / takeover clamp down
E50.2	Feeder / takeover clamp up
E51.1	Feeder / takeover clamp open
E51.2	Feeder / takeover clamp closed
E52.1	Feeder / feed pins up (right)
E52.2	Feeder / feed pins up (left)
E53	Feeder / clamp retainer open
E60	Feeder / takeover position brakes (pins left)
E61	Feeder / takeover position end position (pins left)
E62	Feeder / handover position brakes (pins right)
E63	Feeder / handover position end position (pins right)
E64	Feeder / obstacle recognized (sensor)
E65	Feeder / monitoring area
E66	Feeder / monitoring takeover clamp
E70	Feeder / start key
E71	Feeder / stop key
E73	Feeder / Fade-out MSB auto. program number selection

Outputs	
Y1	Vibrating presser down
Y2.1	Raise sewing head
Y2.2	Lower sewing head
Y3	Blower needle cooling on
Y4	**2nd** level vibrating presser on (prog. outlet **5)**
Y5	Thread puller on (optional)
Y6	Secondary thread tension on
Y7	Thread trimmer on
Y8	Bobbin cover open
Y9	Balance wheel brake off
Y10	Thread clamp open
Y11.1	Clamp open
Y11.2	Clamp closed
Y12	Hook lubrication on
Y13.1	Clamp up (optional)
Y13.2	Clamp down (optional)
bobres	Reset bobbin thread monitor
K20	Thread tension on
out 1	Programmable output **1**
out 2	Programmable output **2**
out 3	Programmable output **3**
out 4	Programmable output **4**
Inputs feeder optional	
Y50.1	Feeder / lower takeover clamp
Y50.2	Feeder / raise takeover clamp
Y51	Feeder / takeover clamp open
Y52.1	Feeder / feed pins up
Y52.2	Feeder / feed pins down
Y53	Feeder / clamp retainer closed
str	Feeder / start feeder motor clockwise
stl	Feeder / start feeder motor anti-clockwise
s1ind	Feeder/ feeder motor frequency **1**
s2ind	Feeder/ feeder motor frequency **2**
h70	Feeder / lamp start key (pre-start)
k55	Feeder / E **66** active

Plug-in connections machine	
X1	Distribution strip
X2	Plug door
X3	Plug feeder
X4	Plug height adjustment
X9	Main plug sewing head
X16	Solenoid switch E2.1
X17	Solenoid switch E2.2
X18	Thread tension on K20
X22	Initiator E30
X23	Initiator E31
X24	Initiator E13.1 (optional)
X25	Initiator E13.2 (optional)
X26	Initiator sm1
X27	Initiator sm2
X29	Supply voltage 24V
X30	Stop key
X31	Bobbin cover open
X32	Rotor position transmitter
X33	Sewing motor
X35	Can-node
X36	Key for secured function
X37	Initiator E10
X38	Foot switch
X39	Counter presser
X40	Monitor feeder
X70	Start inhibitor
Plug-in connections feeder optional	
X44	Data line
X45	Solenoid switch E50.1
X46	Solenoid switch E50.2
X47	Switch E51.1
X48	Switch E51.2
X49	Solenoid switch E52.1
X50	Solenoid switch E5.2
X51	Sensor E 64
X52	Initiator E65
X60	Monitor takeover clamp
X61	Monitor takeover clamp

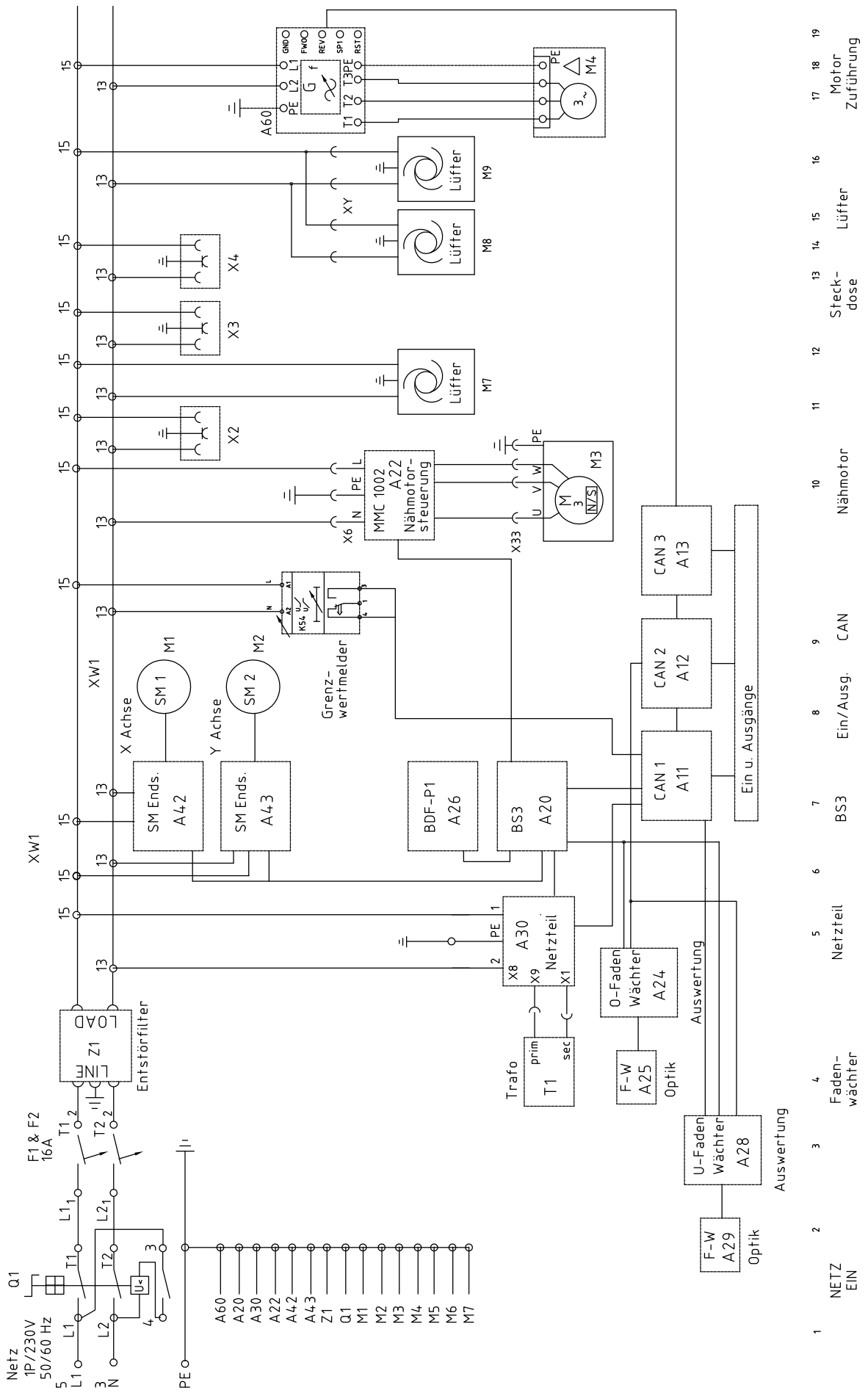
Netz
1P/230V
50/60 Hz
Q1
F1 & F2
16A
Entstörfilter
LINE
Z1
LOAD
XW1
X Achse
Y Achse
SM 1
SM 2
M1
M2
SM Ends.
A42
A43
BDF-P1
A26
BS3
A20
Grenz-
wertmelder
K54
MMC 1002
A22
Nähmotor-
steuerung
X6
X33
M3
X2
X3
X4
Lüfter
M7
M8
M9
XY
A60
M4
CAN 1
A11
CAN 2
A12
CAN 3
A13
Ein u. Ausgänge
A30
Netzteil
X8
X9
X1
Trafo
T1
prim
sec
O-Faden
Wächter
A24
F-W
A25
Optik
Auswertung
U-Faden
Wächter
A28
F-W
A29
Optik
Auswertung
NETZ
EIN
Faden-
wächter
Netzteil
BS3
Ein/Ausg.
CAN
Nähmotor
Steck-
dose
Lüfter
Motor
Zuführung

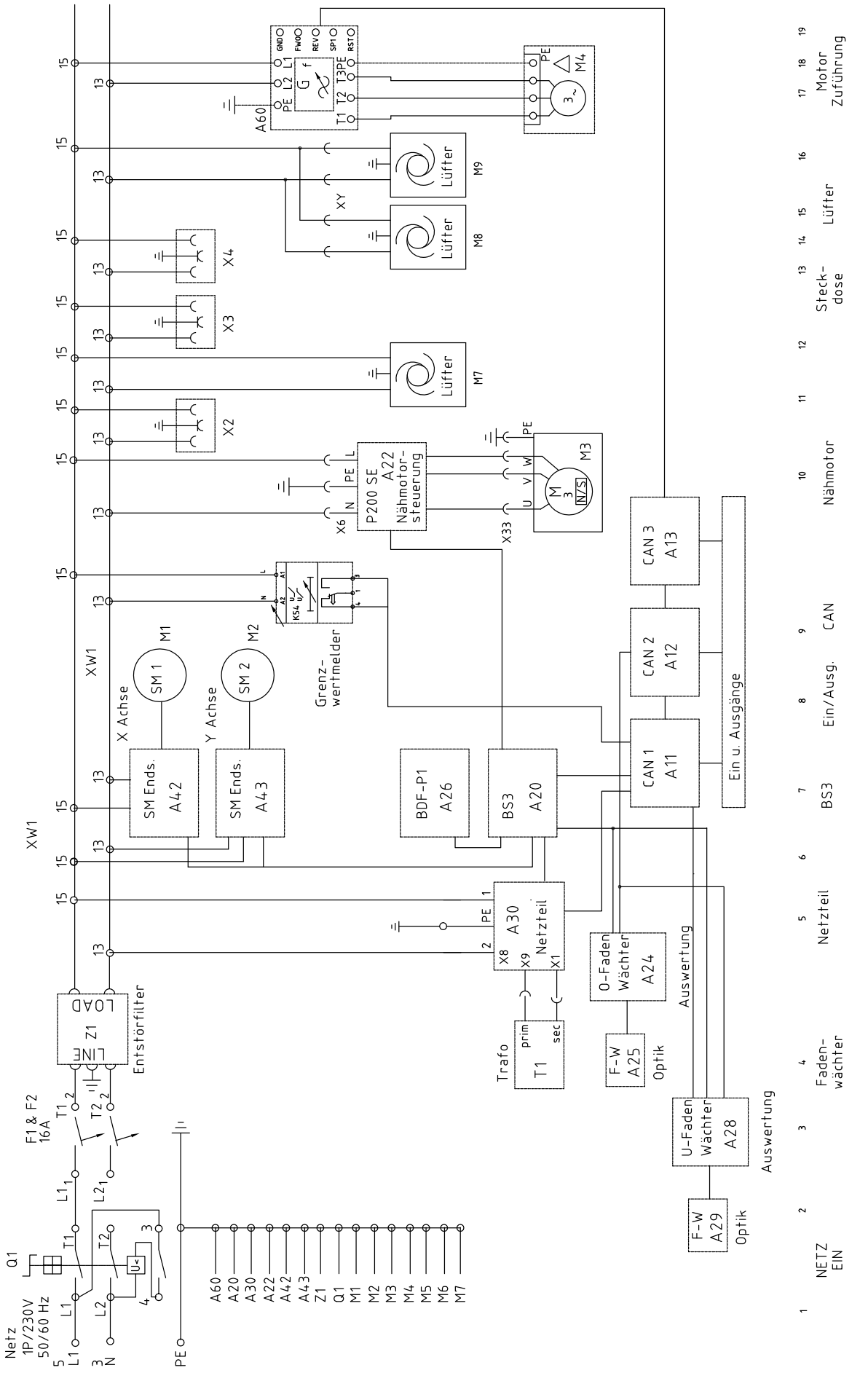
Netz
1P/230V
50/60 Hz
L1
L2
N
PE
Q1
F1 & F2
16A
LINE
LOAD
Z1
Entstörfilter
XW1
A60
A20
A30
A22
A42
A43
Z1
Q1
M1
M2
M3
M4
M5
M6
M7
A30
Netzteil
X8
X9
X1
Trafo
T1
prim
sec
SM Ends.
A42
SM Ends.
A43
X Achse
Y Achse
SM 1
SM 2
Grenz-
wertmelder
K54
BDF-P1
A26
BS3
A20
CAN 1
A11
CAN 2
A12
CAN 3
A13
Ein u. Ausgänge
P200 SE
A22
Nähmotor-
steuerung
X6
X33
M3
Nähmotor
O-Faden
Wächter
A24
F-W
A25
Optik
U-Faden
Wächter
A28
F-W
A29
Optik
Auswertung
Auswertung
X4
X3
X2
XY
M9
M8
M7
Lüfter
A60
GND
FWD
REV
RST
SP1
T1
T2
T3
PE
M4
Motor
Zuführung
Steck-
dose
Lüfter
Nähmotor
CAN
Ein/Ausg.
BS3
Netzteil
Faden-
wächter
NETZ
EIN

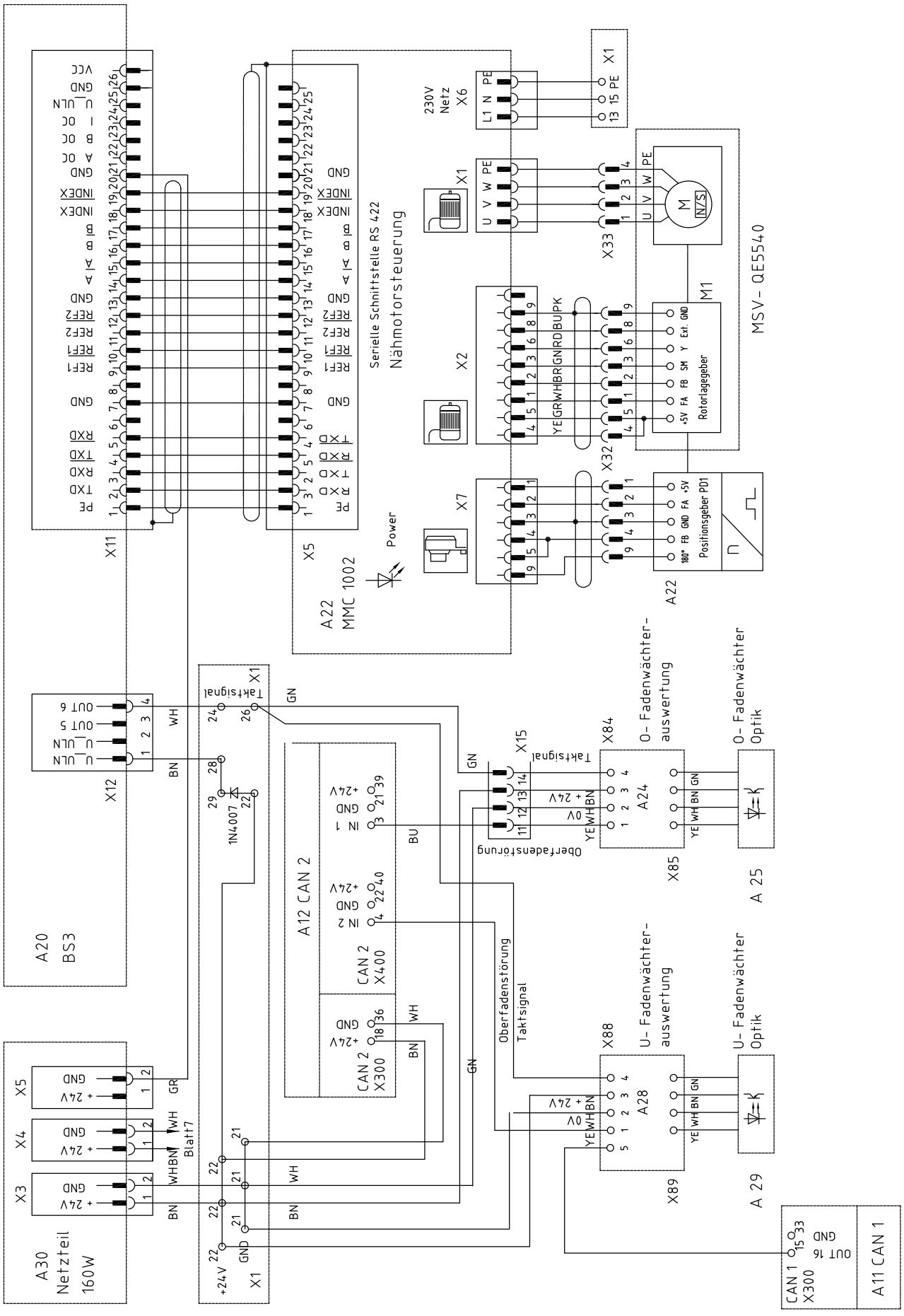
A20
BS3
A30
Netzteil
160W
A22
MMC 1002
Serielle Schnittstelle RS 422
Nähmotorsteuerung
Power
230V
Netz
X6
X1
X2
X7
X5
X11
X12
X33
X32
M1
MSV- QE5540
Rotorlagegeber
Positionsgeber PD1
A22
Taktsignal
1N4007
A12 CAN 2
CAN 2
X400
CAN 2
X300
X15
Oberfadenstörung
X84
O- Fadenwächter-
auswertung
A24
X85
O- Fadenwächter
Optik
A 25
X88
U- Fadenwächter-
auswertung
A28
X89
U- Fadenwächter
Optik
A 29
CAN 1
X300
A11 CAN 1
Blatt7

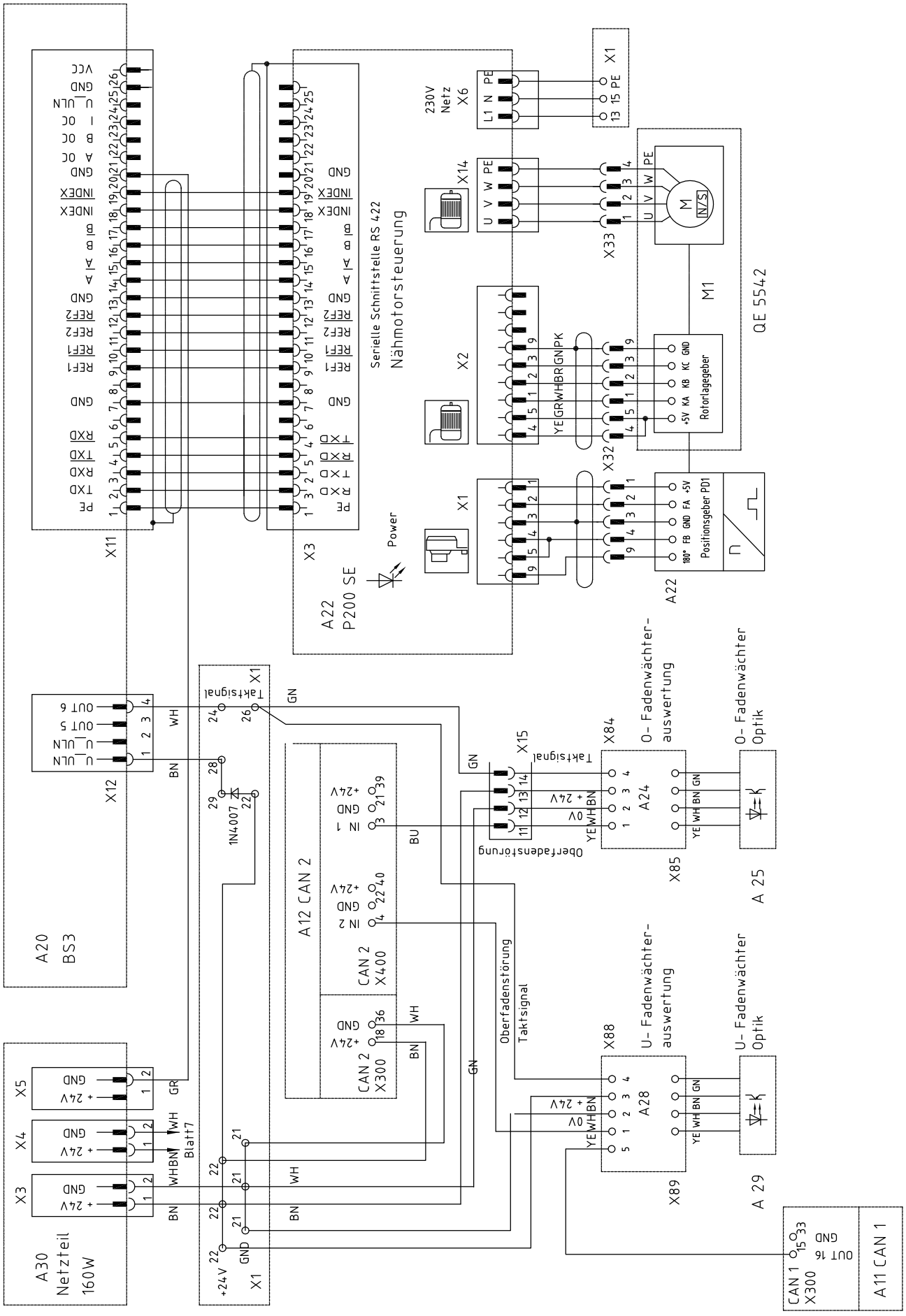
A20
BS3
X11
X12
X3
Serielle Schnittstelle RS 422
Nähmotorsteuerung
A22
P200 SE
Power
230V
Netz
X6
X14
X2
X1
X33
X32
M1
QE 5542
Rotorlagegeber
Positionsgeber PD1
A22
Taktsignal
1N4007
A12 CAN 2
CAN 2
X400
CAN 2
X300
X15
Oberfadenstörung
X84
O- Fadenwächter-
auswertung
A24
X85
O- Fadenwächter
Optik
A 25
Oberfadenstörung
Taktsignal
X88
U- Fadenwächter-
auswertung
A28
X89
U- Fadenwächter
Optik
A 29
A30
Netzteil
160W
X5
X4
X3
Blatt7
CAN 1
X300
A11 CAN 1

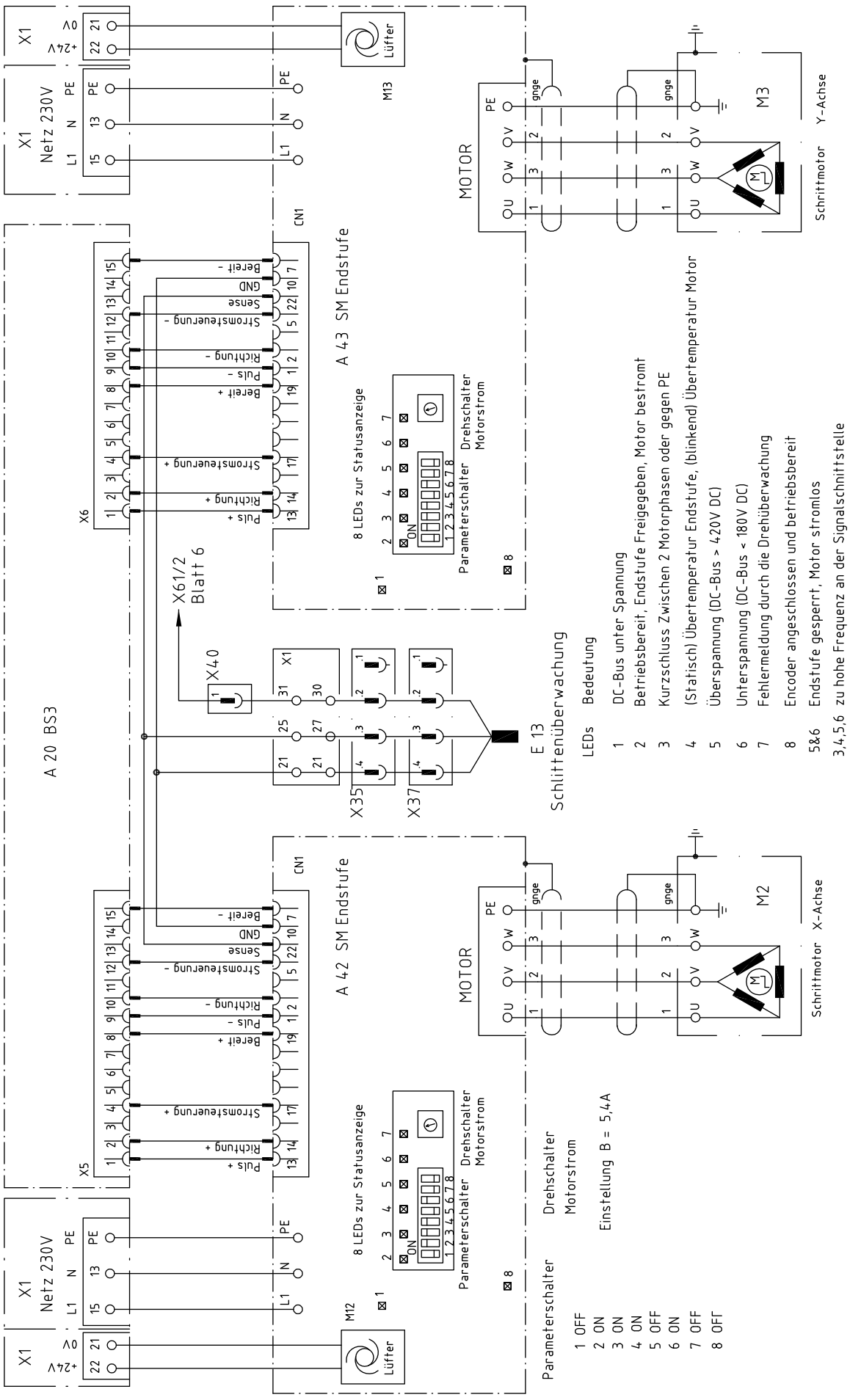
A 20 BS3
A 43 SM Endstufe
A 42 SM Endstufe
E 13
Schlittenüberwachung
X1
Netz 230V
+24V
0V
Lüfter
M13
M12
MOTOR
M3
M2
Schriftmotor Y-Achse
Schriftmotor X-Achse
X6
X5
X40
X61/2
Blatt 6
X35
X37
CN1
8 LEDs zur Statusanzeige
Parameterschalter
Drehschalter
Motorstrom
Richtung +
Puls +
Richtung -
Puls -
Bereit +
Strom Steuerung +
Strom Steuerung -
Sense
GND
Bereit -
LEDs Bedeutung
1 DC-Bus unter Spannung
2 Betriebsbereit, Endstufe Freigegeben, Motor bestromt
3 Kurzschluss Zwischen 2 Motorphasen oder gegen PE
4 (Statisch) Übertemperatur Endstufe, (blinkend) Übertemperatur Motor
5 Überspannung (DC-Bus > 420V DC)
6 Unterspannung (DC-Bus < 180V DC)
7 Fehlermeldung durch die Drehüberwachung
8 Encoder angeschlossen und betriebsbereit
5&6 Endstufe gesperrt, Motor stromlos
3,4,5,6 zu hohe Frequenz an der Signalschnittstelle
Parameterschalter
1 OFF
2 ON
3 ON
4 ON
5 OFF
6 ON
7 OFF
8 OFF
Drehschalter
Motorstrom
Einstellung B = 5,4A

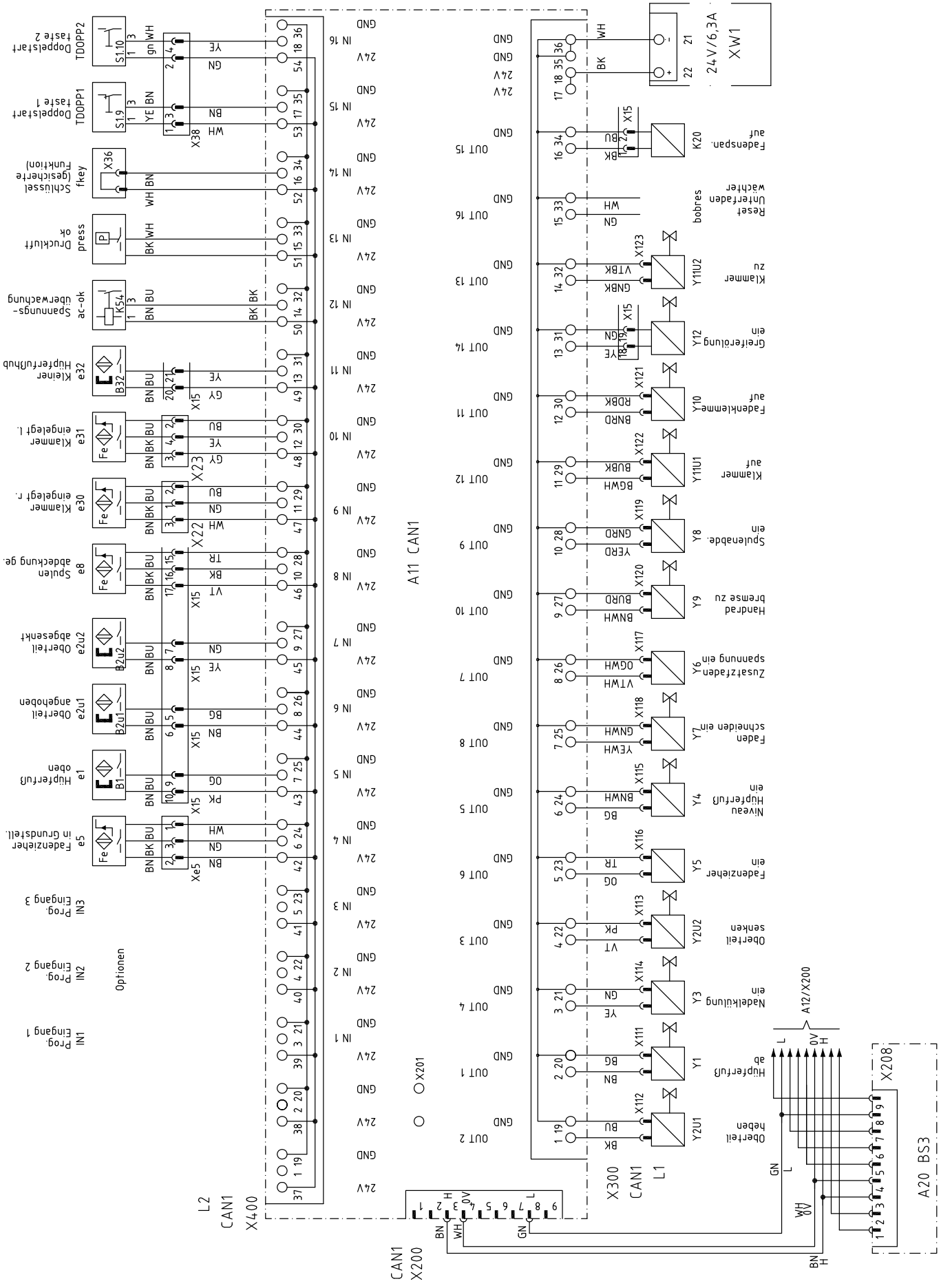
Doppelstart taste 2
TDOPP2
Doppelstart taste 1
TDOPP1
Schlüssel (gesicherte Funktion)
fkey
Druckluft ok
press
Spannungs-überwachung
ac-ok
Kleiner Hüpferfußhub
e32
Klammer eingelegt l.
e31
Klammer eingelegt r.
e30
Spulen abdeckung ge.
e8
Oberteil abgesenkt
e2u2
Oberteil angehoben
e2u1
Hüpferfuß oben
e1
Fadenzieher in Grundstell.
e5
Prog. Eingang 3
IN3
Prog. Eingang 2
IN2
Prog. Eingang 1
IN1
Optionen
L2
CAN1
X400
A11 CAN1
X201
CAN1
X200
X300
CAN1
L1
24V/6,3A
XW1
Fadenspan. auf
K20
Reset Unterfaden wächter
bobres
Klammer zu
Y11U2
Greiferölung ein
Y12
Fadenklemme auf
Y10
Klammer auf
Y11U1
Spulenabde. ein
Y8
Handrad bremse zu
Y9
Zusatzfaden spannung ein
Y6
Faden schneiden ein
Y7
Niveau Hüpferfuß ein
Y4
Fadenzieher ein
Y5
Oberteil senken
Y2U2
Nadelkülung ein
Y3
Hüpferfuß ab
Y1
Oberteil heben
Y2U1
A12/X200
X208
A20 BS3

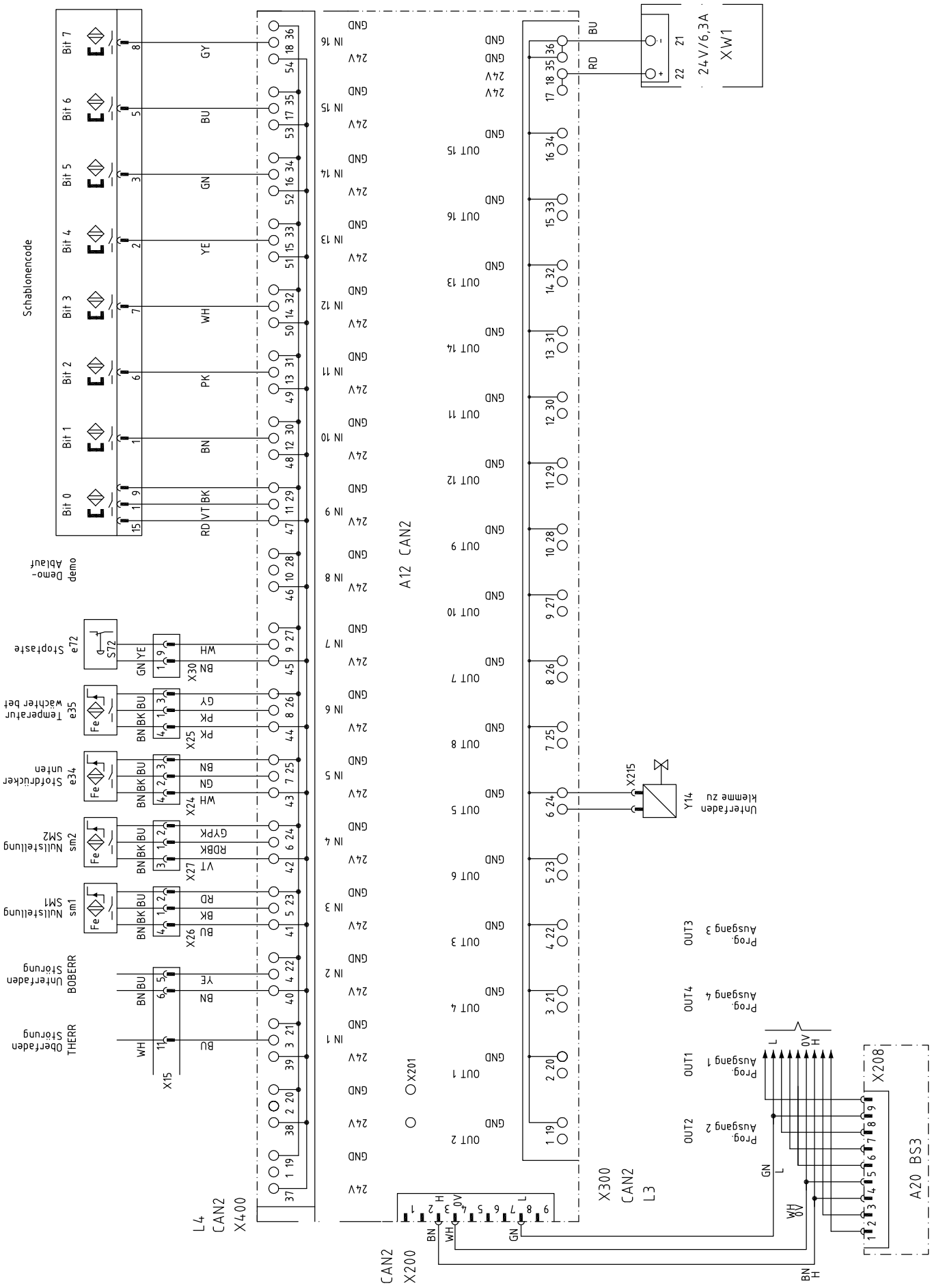
A12 CAN2
A20 BS3
X300
CAN2
L3
L4
CAN2
X400
CAN2
X200
X201
X208
X215
X15
X24
X25
X26
X27
X30
24V/6,3A
XW1
Schablonencode
Bit 0
Bit 1
Bit 2
Bit 3
Bit 4
Bit 5
Bit 6
Bit 7
Demo-Ablauf
demo
Stopptaste
e72
Temperatur wächter bet
e35
Störfühler unten
e34
Nullstellung SM2
sm2
Nullstellung SM1
sm1
Unterfaden Störung
BOBERR
Oberfaden Störung
THERR
Unterfaden klemme zu
Y14
Prog. Ausgang 1
Prog. Ausgang 2
Prog. Ausgang 3
Prog. Ausgang 4
OUT1
OUT2
OUT3
OUT4

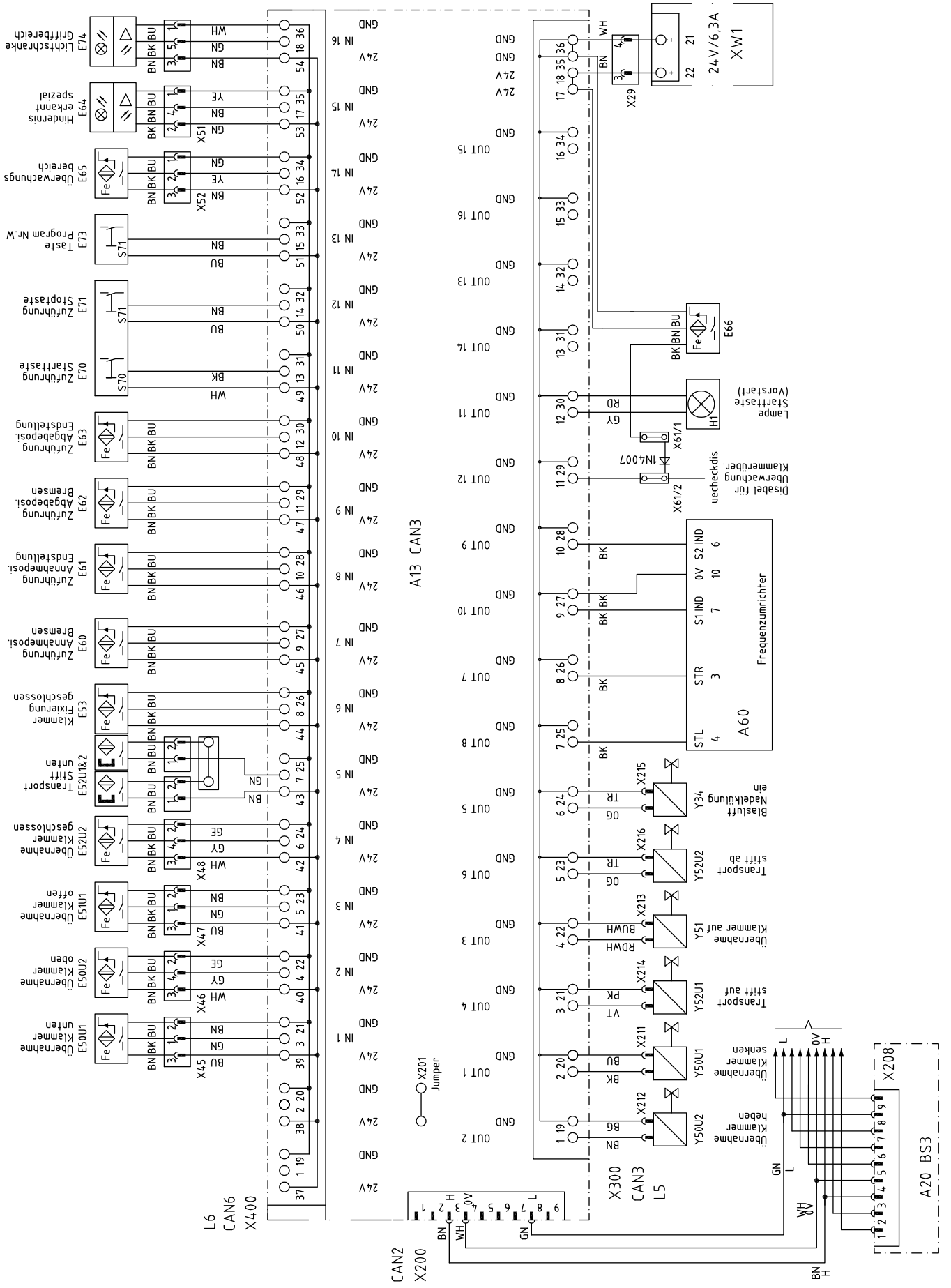
Lichtschranke Griffbereich
Hindernis erkannt spezial
Überwachungs bereich
Taste Program Nr.W
Zuführung Stoptaste
Zuführung Starttaste
Zuführung Abgabeposi. Endstellung
Zuführung Abgabeposi. Bremsen
Zuführung Annahmeposi. Endstellung
Zuführung Annahmeposi. Bremsen
Klammer Fixierung geschlossen
Transport Stift unten
Übernahme Klammer geschlossen
Übernahme Klammer offen
Übernahme Klammer oben
Übernahme Klammer unten
A13 CAN3
L6 CAN6 X400
X201 Jumper
CAN2 X200
X300 CAN3 L5
24V/6,3A XW1
Lampe Starttaste (Vorstart)
Disabel für Überwachung Klammerüber.
uecheckdis
Frequenzumrichter
A60
Blasluft Nadelkülung ein
Transport stift ab
Übernahme Klammer auf
Transport stift auf
Übernahme Klammer senken
Übernahme Klammer heben
X208
A20 BS3

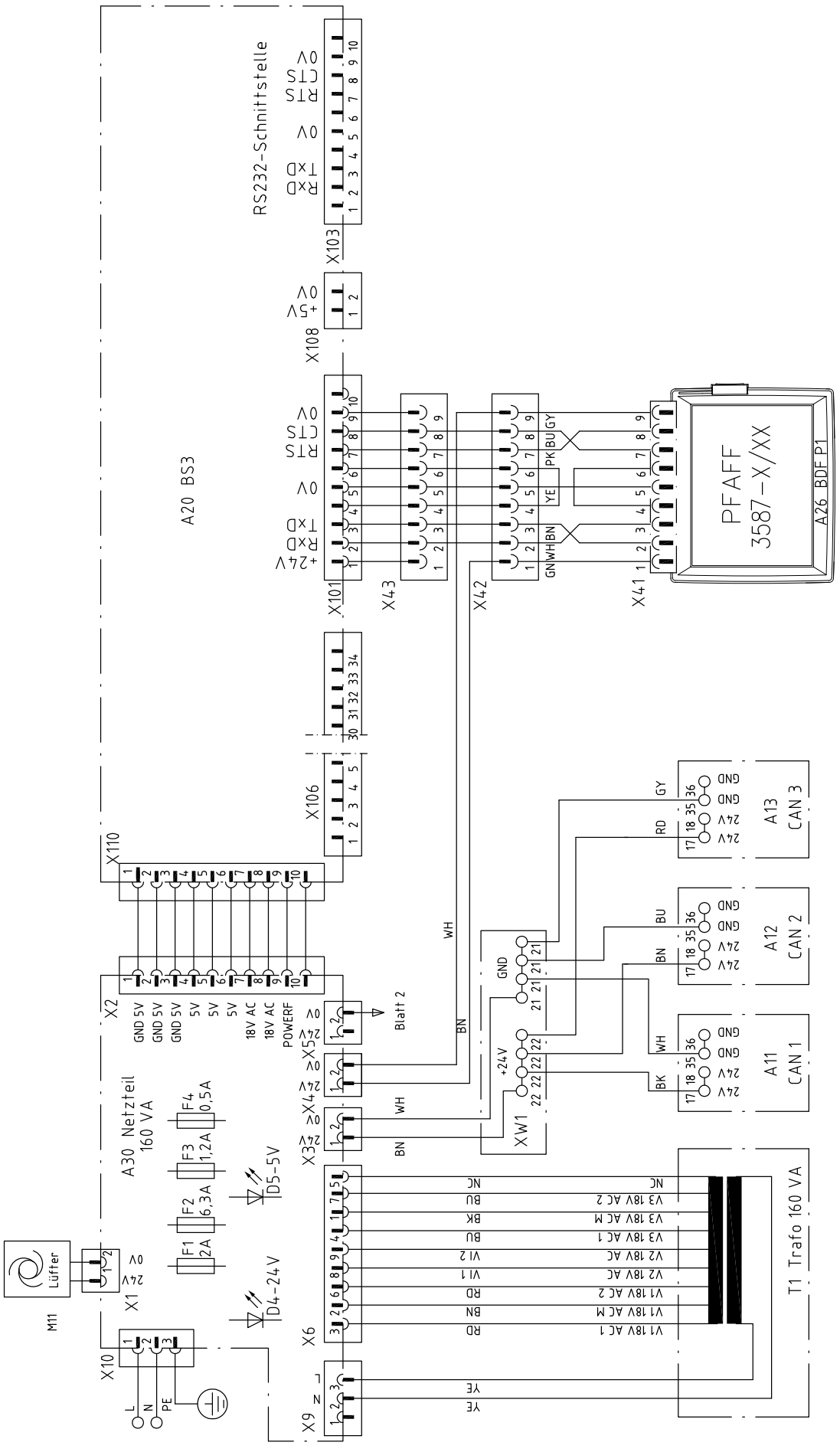
A20 BS3
RS232-Schnittstelle
PFAFF 3587-X/XX
A26 BDF P1
A30 Netzteil 160 VA
T1 Trafo 160 VA
A11 CAN 1
A12 CAN 2
A13 CAN 3
Lüfter
M11
D4-24V
D5-5V
Blatt 2
F1 2A
F2 6,3A
F3 1,2A
F4 0,5A
X1
X2
X3
X4
X5
X6
X9
X10
X101
X103
X106
X108
X110
X41
X42
X43
XW1

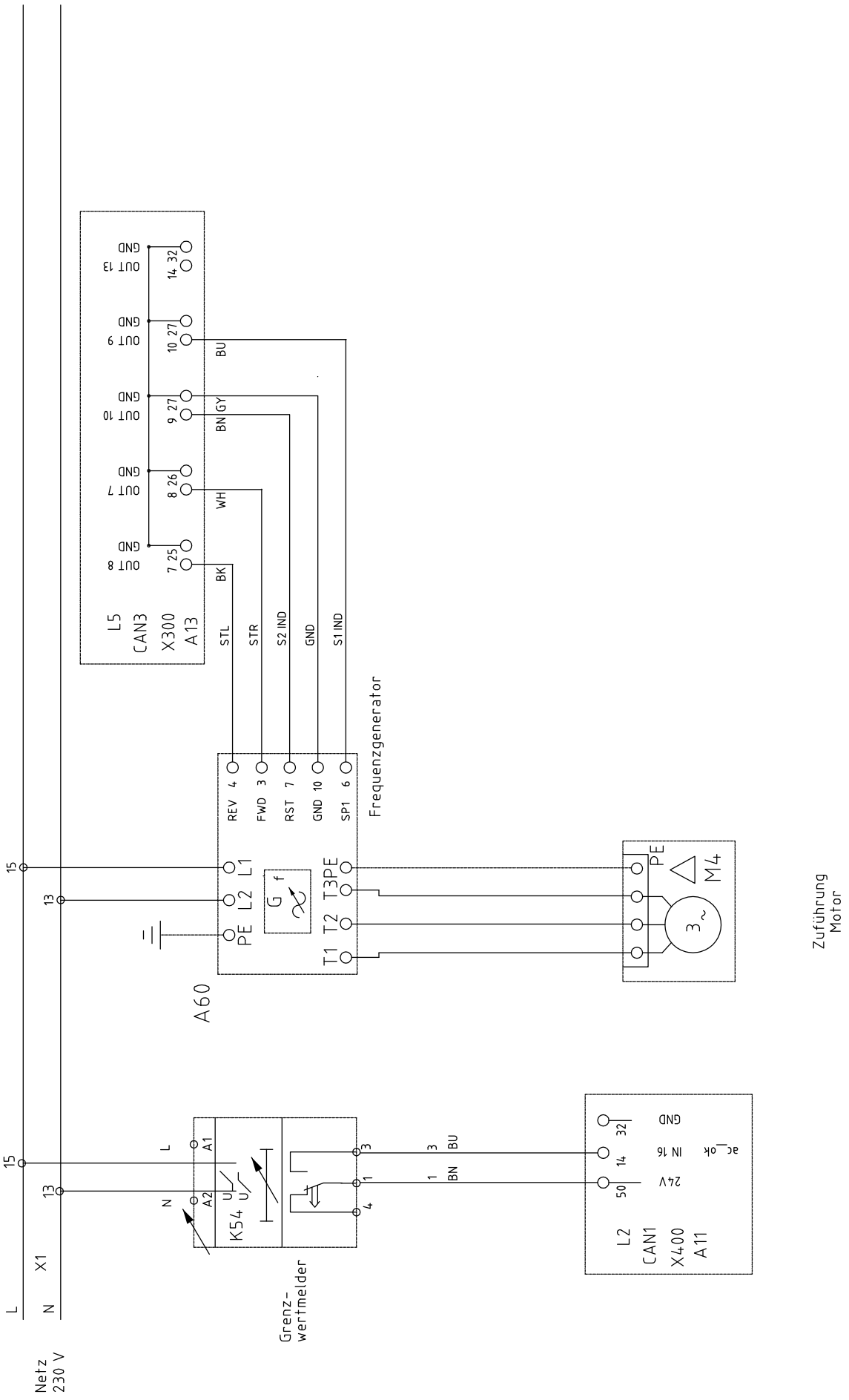
Netz
230 V
L
N
X1
15
13
15
13
L
N
A1
A2
K54
U
U
3
1
4
3
1
BU
BN
Grenz-
wertmelder
L5
CAN3
X300
A13
OUT 13
GND
OUT 9
GND
OUT 10
GND
OUT 7
GND
OUT 8
GND
14 32
10 27
9 27
8 26
7 25
BU
BN GY
WH
BK
STL
STR
S2 IND
GND
S1 IND
A60
REV 4
FWD 3
RST 7
GND 10
SP1 6
Frequenzgenerator
PE L2 L1
T1 T2 T3PE
G f
PE
M4
3~
Zuführung
Motor
L2
CAN1
X400
A11
GND
32
IN 16
ac_ok
14
24V
50
1
BN
3
BU

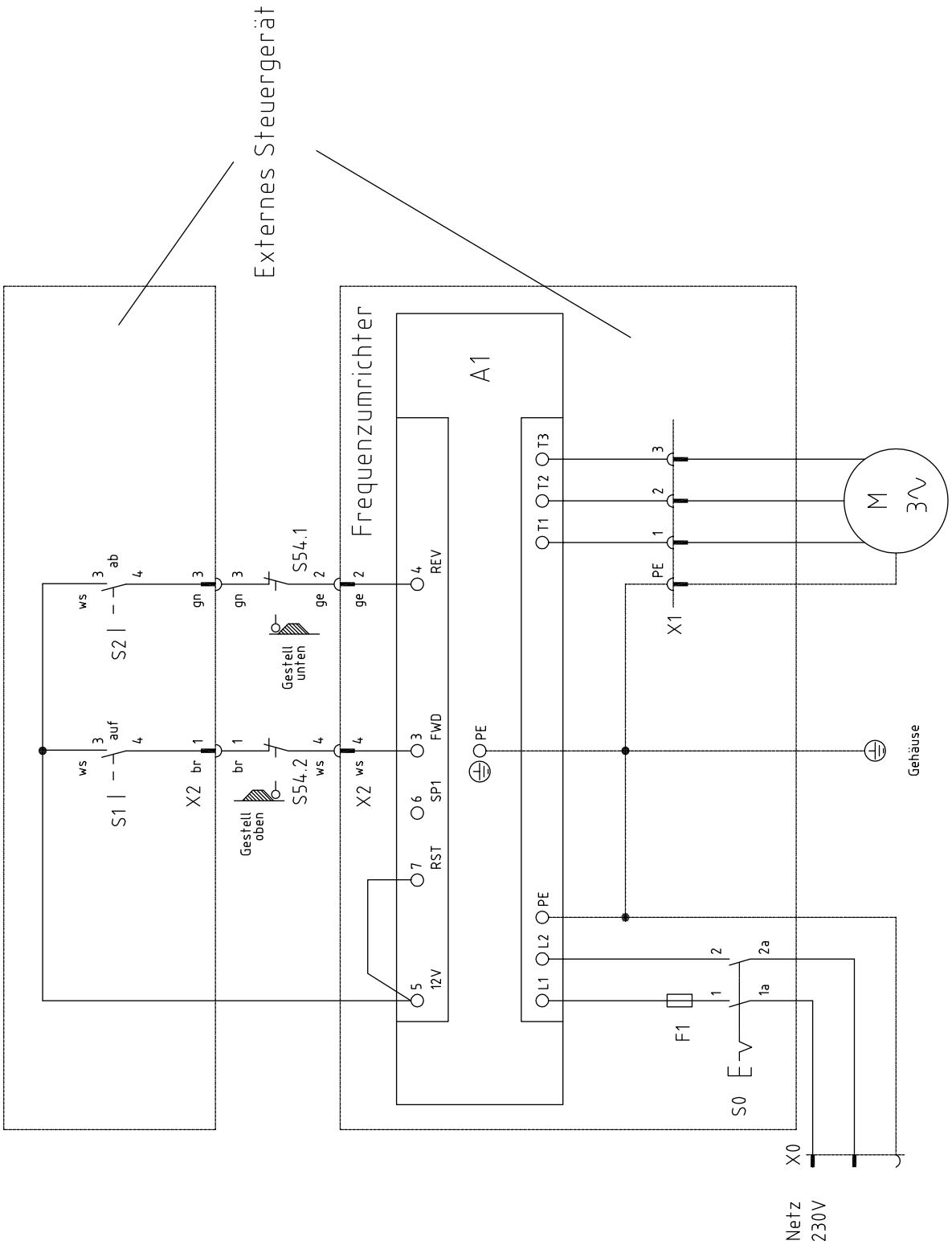
Externes Steuergerät
Frequenzumrichter
A1
S1
S2
X2
S54.1
S54.2
Gestell unten
Gestell oben
REV
FWD
SP1
RST
12V
T1
T2
T3
PE
L1
L2
X1
M
3~
Gehäuse
F1
S0
X0
Netz 230V

PFAFF® Industrial



Europäische Union
Wachstum durch Innovation – EFRE



PFAFF Industriesysteme
und Maschinen AG

Hans-Geiger-Str. 12 - IG Nord
D-67661 Kaiserslautern

Phone: +49-6301 3205 - 0
Fax: +49-6301 3205 1386
E-mail: info@pfaff-industrial.com

Hotlines:
Technical service: +49-175/2243-101
Application consultance: +49-175/2243-102
Spare-parts hotline: +49-175/2243-103

Printed in Germany

© PFAFF Industriesysteme und Maschinen AG 2009, PFAFF is the exclusive trademark of VSM Group AB.PFAFF Industriesysteme und Maschinen AG is an authorized licensee of the PFAFF trademark.