PFAFF® Industrial

3590 -1/3030 -2/5030

INSTRUCTION MANUAL

This instruction manual applies to machines from serial number **2 770 769** and software version **0390/007** (-2/5030) and **0392/007** (-1/3030) onwards.

296-12-19 115/002
Betriebsanleitung engl. 11.10

The reprinting, copying or translation of PFAFF Instruction Manuals, whether in whole or in part, is only permitted with our previous authorization and with written reference to the source.

PFAFF Industriesysteme
und Maschinen AG

Hans-Geiger-Str. 12 - IG Nord
D-67661 Kaiserslautern

Contents ..... Chapter - Page

Register 01

1 **Safety** 7
1.01 Directives 7
1.02 General notes on safety 7
1.03 Safety symbols 8
1.04 Important notes for the user 8
1.05 Notes for operating and technical staff 9
1.05.01 Operating staff 9
1.05.02 Technical staff 9
1.06 Danger warnings 10

Register 02

2 **Proper use** 11
3 **Specifications▲** 12
4 **Disposal of Machine** 13
5 **Transportation, packing and storage** 14
5.01 Transportation to customer's premises 14
5.02 Transportation inside the customer's premises 14
5.03 Disposal of packing materials 14
5.04 Storage 14
6 **Explanation of symbols** 15

Register 03

7 **Controls** 17
7.01 On/off switch 17
7.02 Foot switch 17
7.03 Control panel 18
7.04 Handwheel 19

Register 04

8 **Mounting and commissioning the machine** 21
8.01 Mounting 21
8.02 Mounting the spool holder 22
8.03 Commissioning 22
8.04 Switching the machine on/off 23
8.05 Selecting the language and units 24
8.06 Switching the key tone on / off 25
8.07 Check/adjust zero points 26

Contents ..... Chapter - Page

Register 05

9 **Preparation** **29**
9.01 Inserting the needle 29
9.02 Winding the bobbin thread, adjusting the thread tension 30
9.03 Changing the bobbin / adjusting the bobbin thread tension 31
9.04 Threading the needle / adjusting the needle thread tension 32
9.05 Selecting the program number 33
9.06 Selecting / configuring a sequence 34
9.06.01 Selecting a sequence 34
9.06.02 Configuring a sequence 35
9.07 Selecting / combining linked programs 36
9.07.01 Selecting linked programs 36
9.07.02 Combining linked programs 37
9.08 Enter template monitoring/ template code 38
9.09 Automatic program selection 40
9.09.01 Calling up the automatic program selection function 40
9.09.02 Automatic program selection/ enter program number 41
9.10 Setting the bobbin thread stitch counter 43

Register 06

10 **Sewing** **45**
10.01 Sewing with individual programs 45
10.02 Sewing with sequences 48
10.03 Sewing with linked programs 50
10.04 Sewing with automatic program selection 52
10.05 Program interruption 54
10.06 Error messages 55

11 **Input** **56**
11.01 Overview of the functions in the input mode 56
11.02 Creating / altering seam programs 58
11.02.01 Entering a comment 60
11.02.02 Block functions 61
11.02.03 Image functions 63
11.02.04 Inserting functions 65
11.02.05 Other functions 67
11.03 An example for programming a seam 69
11.04 Program management 76
11.05 Rights of access 78

Contents ..... Chapter - Page

Register 07

12	**Care and maintenance**	**81**
12.01	Maintenance intervals	81
12.02	Cleaning the machine	81
12.03	Cleaning the hook	82
12.04	Clean fan air filter	82
12.05	Checking/adjusting the air pressure	83
12.06	Cleaning the air filter of the air-filter/lubricator	83
12.07	Checking the oil level of the sewing head lubrication	84
12.08	Lubricate presser foot drive eccentric	84
12.09	Lubricate jig guide	85
13	**Adjustment**	**86**
13.01	Notes on adjustment	86
13.02	Tools, gauges and other accessories	86
13.03	Abbreviations	86
13.04	Tilting the sewing head	87
13.05	Adjusting the sewing head	88
13.05.01	Spacing between sewing head and bed plate	88
13.05.02	Position of the sewing head in relation to the bed plate	89
13.05.03	Upper and lower toothed belt guards	90
13.05.04	Counterweight	91
13.05.05	Preadjusting the needle height	92
13.05.06	Centering the needle in the needle hole	93
13.05.07	Needle rise, needle height, hook clearance and needle guard	94
13.05.08	Bobbin-case opener stroke	96
13.05.09	Counter presser lifting stroke	97
13.05.10	Counter presser height	98
13.05.11	Counter presser position	99
13.05.12	Resting position of the roller lever / radial position of the control cam	100
13.05.13	Thread catcher height	101
13.05.14	Thread catcher position and knife height	102
13.05.15	Knife pressure	103
13.05.16	Bobbin thread clamp spring	104
13.05.17	Manual cutting test	105
13.05.18	Presser foot stroke position	106
13.05.19	Presser foot lifting stroke	107
13.05.20	Adjust presser foot to material thickness	108
13.05.21	Presser foot height	109
13.05.22	Adjustment of the presser foot level	110

Contents ..... Chapter - Page

13.05.23 Bobbin winder 111
13.05.24 Needle thread tension release 112
13.05.25 Thread check spring and slack thread regulator 113
13.05.26 Sewing head lifting cylinder 114
13.05.27 Bobbin thread slide 115
13.05.28 Hook lubrication 116
13.06 Adjusting the template drive 118
13.06.01 Monitoring the template drive 118
13.06.02 Aligning the template drive 119
13.06.03 Adjusting the belt tensions 120
13.06.04 Jig drive reference points 121
13.07 Service menu 123
13.07.01 Cold start 124
13.07.02 Loading / updating the operating program 125
13.08 Sewing motor adjustments 126
13.09 Parameter settings 127
13.09.01 Selecting and altering parameters. 127
13.09.02 List of parameters 128
13.09.03 Carriage start (NIS) 132

Register 08

14 Control 133
14.01 Basic setting / Diagnosis / Pin assignment 133
14.01.01 Basic control unit A20 133
14.01.02 Sewing drive A22 135
14.02 Description of the error messages 137
14.02.01 General errors 137
14.02.02 CAN-errors 140
14.02.03 Stitch generation error 140
14.02.04 Sewing motor errors 141
14.02.05 RFID error 142
14.03 List of outputs and inputs 142
14.03.01 CAN-nodes 1 142
14.03.02 CAN-nodes 2 143
14.03.03 Special outputs 144
14.04 Boot key 145
15 Pneumatics-switch diagram 146
16 Circuit diagrams 150

1 Safety

1.01 Directives

This machine was built in accordance with the European regulations stated in the Conformity and Manufacturer's Declaration.
In addition to this Instruction Manual, also observe all generally accepted, statutory and other regulations and legal requirements - also those of the country in which the machine will be operated - and all valid environmental protection regulations!
Applicable local regulations of the social insurance society for occupational accidents or other supervisory organizations are to be strictly adhered to!

1.02 General notes on safety

- This machine must only be operated by adequately trained operators and only after having completely read and understood the Instruction Manual!
- All Notes on Safety and Instruction Manuals of the motor manufacturer are to be read before operating the machine!
- The Danger and Safety Instructions on the machine itself are to be followed!
- This machine must only be used for the purpose for which it is intended and must not be operated without its safety devices. All applicable safety regulations must be observed.
- When leaving the machine unattended and during maintenance work, the machine must be disconnected from the power supply by operating the main switch or by removing the plug from the mains!
- Daily maintenance work must only be carried out by appropriately trained personnel!
- When carrying out servicing or repair work on pneumatic devices, the machine must be disconnected from the pneumatic supply network! The only exceptions to this are adjustment work and functional tests carried out by appropriately trained personnel!
- Repair work and special maintenance work must only be carried out by specialists or appropriately trained personnel!
- Work on electrical equipment must only be carried out by appropriately trained specialist personnel!
- Work is not permitted on parts and equipment which are connected to the power supply! Exceptions to this are contained in the regulations EN 50110.
- Modifications and alterations to the machine must only be carried out pursuant to all relevant safety regulations!
- Only spare parts which have been approved by us are to be used for repairs! We expressly point out that any replacement parts or accessories not supplied by us have not been tested and approved by us. The installation and/or use of any such products may result in negative changes to the constructional characteristics of the machine. We are not liable for any damage which may be caused by non-original parts.

1.03 Safety symbols



Danger!
Special points to observe.



Danger of injury to operating or technical staff!



Caution

Do not operate without finger guard and safety devices.

Before threading, changing bobbin and needle, cleaning etc. **switch off main switch**.

1.04 Important notes for the user

- This instruction manual belongs to the equipment of the machine and must be available to the operating staff at all times.
- This instruction manual must be read before the machine is operated for the first time.
- Both operating and technical staff must be instructed on the safety devices of the machine and on safe working methods.
- It is the duty of the user to operate the machine in perfect running order only.
- The user must ensure that none of the safety devices are removed nor put out of working order.
- The user must ensure that only authorized persons operate and work on the machine.

For further information please refer to your PFAFF agency.

1.05 Notes for operating and technical staff

1.05.01 Operating staff

Operating staff are the persons responsible for setting up, operating and cleaning the machine and for eliminating any malfunctioning in the sewing area.

The operating staff is obliged to observe the following points:

- The notes on safety in this instruction manual must always be observed!
- Any working methods, which adversely affect the safety of the machine, must be avoided.!
- Loose-fitting clothing should be avoided. No jewellery, such as chains and rings, should be worn!
- Ensure that only authorised persons enter the danger area of the machine!
- Any changes occurring on the machine, which may affect its safety, must be reported to the user immediately.

1.05.02 Technical staff

Technical staff are persons who have been trained in electrical engineering/electronics and mechanical engineering. They are responsible for lubricating, servicing, repairing and adjusting the machine.

The technical staff is obliged to observe the following points:

- The notes on safety in this instruction manual must always be observed!
- Before carrying out any adjustment or repair work the main switch must be switched off and measures taken to prevent it from being switched on again!
- Never work on parts or equipment still connected to the power supply! Exceptions are only permissible in accordance with the regulations EN 50110.
- All safety covers must be replaced after the completion of maintenance or repair work!

1.06 Danger warnings

A working area of 1 m must be kept free both in front of and behind the machine, so that easy access is possible at all times.

Never put your hands in the sewing area during sewing!
Danger of injury by the needle!

Never leave objects on the table while adjusting the machine settings! Objects can become trapped or be slung away! Danger of injury by hurled objects!

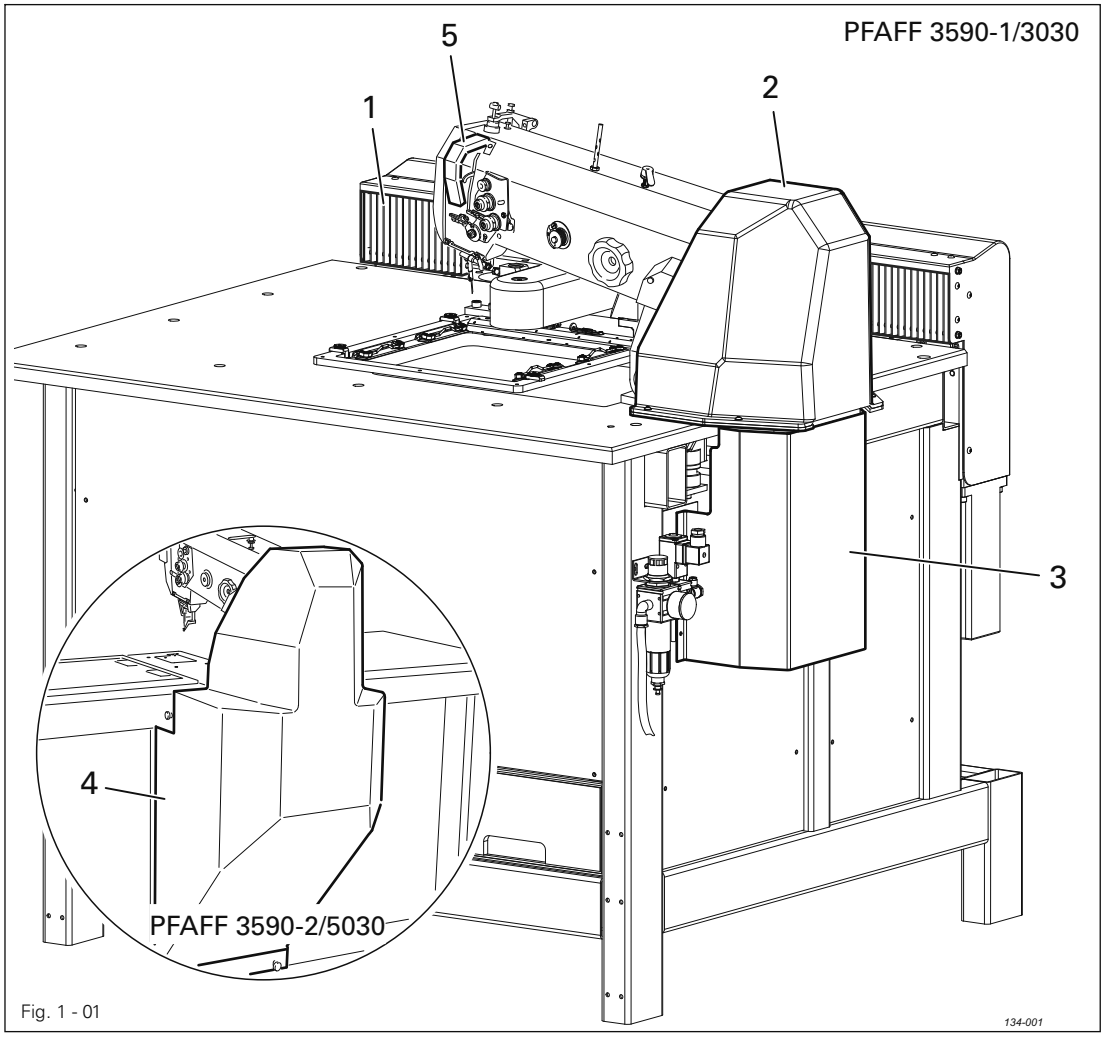

Fig. 1 - 01

Do not operate the machine without the protective covers 1, 2 and 3 and/or 4!
Danger of crushing between moving parts of the pneumatic and/or transport devices.

Do not operate the machine without take-up lever guard 5!
Danger of injury by the movement of the take-up lever!

Register 02

2 Proper use

The machines PFAFF 3590-1/3030 and 3590-2/5030 are large area backtack automats for the production of backtack and assembly seams in the shoe, leather, plastic, and automotive industry.



Any and all uses of this machine which have not been approved of by the manufacturer are considered to be inappropriate! The manufacturer cannot be held liable for any damage caused by the inappropriate use of the machine! The appropriate use of the machine means that all operational, adjustment, maintenance and repair measures required by the manufacturer are to be observed!

3 Specifications▲

Max. sewing speed:.....3000 s.p.m.
Max. stitch length: .....0,1 - 6 mm
Stitch type:.....301 (lockstitch)

Needle system:.....134-35 KK
Needle size ..... 80 – 160

Sewing motor: ..... See motor service manual
Max. motor speed: .....3000 r.p.m.
Operating voltage: .....230 V ± 10%, 50/60 Hz, A/C
Power requirement: .....2.2 kW
Leakage current ..... ≤ 5 mA◆

Control range:
3590-1/3030.....300 x 300 mm
3590-1/5030.....500 x 300 mm
Storage capacity:: ..... 5.000.000 stitches

Min. working pressure:..... 6 bar
Air consumption:.....approx. 15l/cycle

Machine dimensions:
Length:..... approx. 1350 mm
Width: ..... approx. 1200 mm
Height: ..... approx. 1200 mm
Table height:..... 850 – 1150 mm

Net weight: ..... 530 kg

Ambient temperature
85% rel. humidity (condensation not permitted): ..... 5 – 40° C

Noise data
Emission sound pressure level at the workplace
at a sewing speed of 3000 spm ..... L_{pA} < 76 dB(A)■
(Noise measurement in acc. with DIN 45 635-48-A-1, ISO 11204, ISO 3744, ISO 4871)

▲ Subject to alteration

◆ Due to the use of network filters there is a nominal leakage current of ≤ 5 mA.

■ K_{pA} = 2,5 dB

4 Disposal of Machine

- Proper disposal of the machine is the responsibility of the customer.
- The materials used for the machine are steel, aluminium, brass and various plastic materials. The electrical equipment comprises plastic materials and copper.
- The machine is to be disposed of according to the locally valid pollution control regula-tions; if necessary, a specialist ist to be commissioned.



Care must be taken that parts soiled with lubricants are disposed of separately according to the locally valid pollution control regulations!

5 Transportation, packing and storage

5.01 Transportation to customer's premises

The machines are delivered completely packed.

5.02 Transportation inside the customer's premises

The manufacturer cannot be made liable for transportation inside the customer's premises nor to other operating locations. It must be ensured that the machines are only transported in an upright position.

5.03 Disposal of packing materials

The packing materials of this machine comprise paper, cardboard and VCE fibre. Proper disposal of the packing material is the responsibility of the customer.

5.04 Storage

If the machine is not in use, it can be stored as it is for a period of up to six months, but It should be protected against dust and moisture.
If the machine is stored for longer periods, the individual parts, especially the surfaces of moving parts, must be protected against corrosion, e.g. by a film of oil.

6 Explanation of symbols

In this instruction manual, work to be carried out or important information is accentuated by symbols. These symbols have the following meanings:



Note, information



Cleaning, care



Lubrication

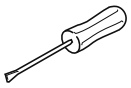

Maintenance, repairs, adjustment, service work
(only to be carried out by technical staff)

7 Controls

7.01 On/off switch

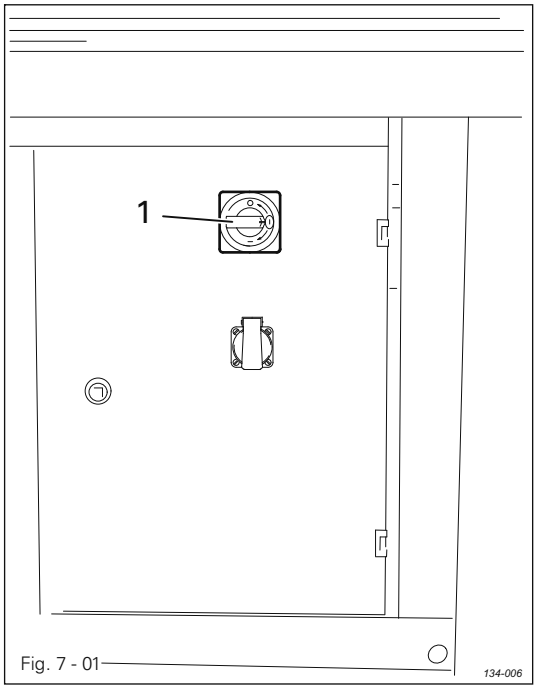

Fig. 7 - 01

- By turning on/off switch **1**, the power supply to the machine is switched on or off.

7.02 Foot switch

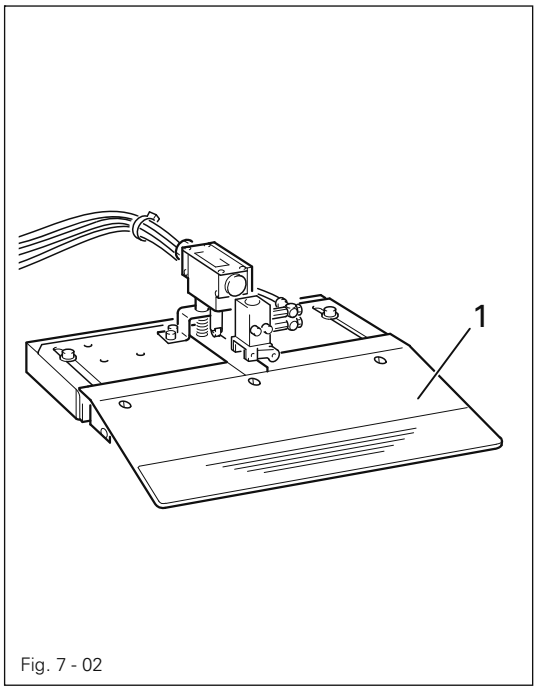

Fig. 7 - 02

- The foot switch can be operated in **2** positions and has the following functions, depending on how it is set.

FLIP-FLOP-mode on

Pos. **1**: Jig is locked in jig drive.
When action is repeated, lock is released.

Pos. **2**: Work sequence is started.

FLIP-FLOP-mode off

Pos. **1**: Jig is locked in jig drive.
Lock is released immediately after the foot switch is released.

Pos. **2**: Work sequence is started.

7.03 Control panel

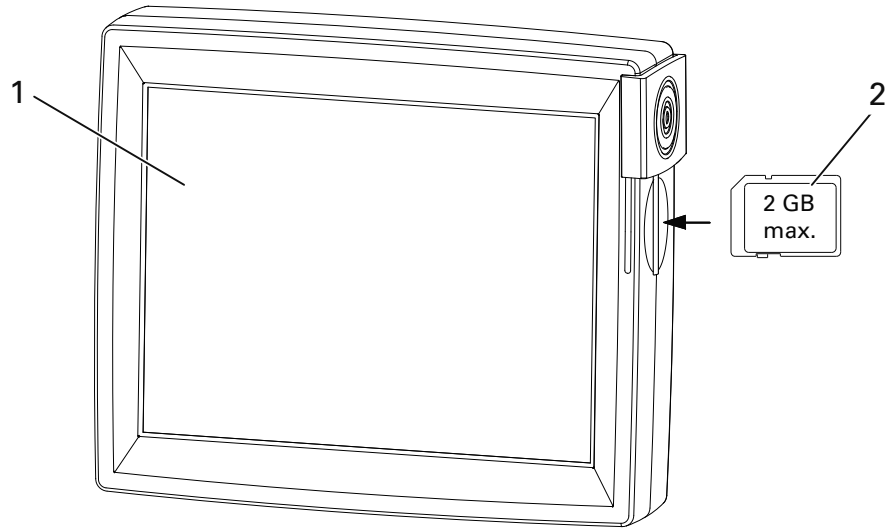

Fig. 7 - 03

The current operating conditions are displayed on control panel **1**. Operation takes place in a constant dialogue between the control unit and the operator. For this purpose, depending on the operating condition of the machine, different symbols and/or texts are displayed. If the symbols or texts are framed, these show functions which can be selected by pressing the appropriate position on the monitor. By pressing the corresponding function this is carried out or switched on or off immediately, or a further menu appears, e.g. for entering a value. Activated functions are shown with inverted symbols. Unframed symbols or texts are only used for display purposes and cannot be selected by pressing.
o read sewing programs or install machine software, use the sd-card **2** in the control panel.

Description of the functions



Normal symbol = function switched off (inactive)



Inverted symbol = function switched on (active)

7.04 Handwheel

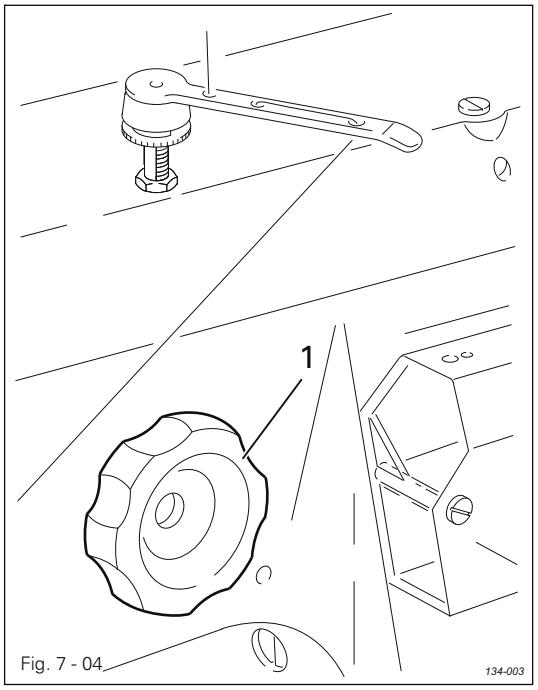

Fig. 7 - 04

- By turning and simultaneously pushing the handwheel **1** in, the needle bar can be positioned manually as required.

8 Mounting and commissioning the machine

After unpacking the machine, check it for any transport damage. In case of damage, inform the shipping company and the responsible PFAFF dealer.

The machine must only be mounted and commissioned by qualified personnel!
All relevant safety regulations are to be observed!

8.01 Mounting

At the machine's location, there must be a stable and horizontal surface as well as suitable electricity and compressed air supplies (see chapter **3** Specifications).

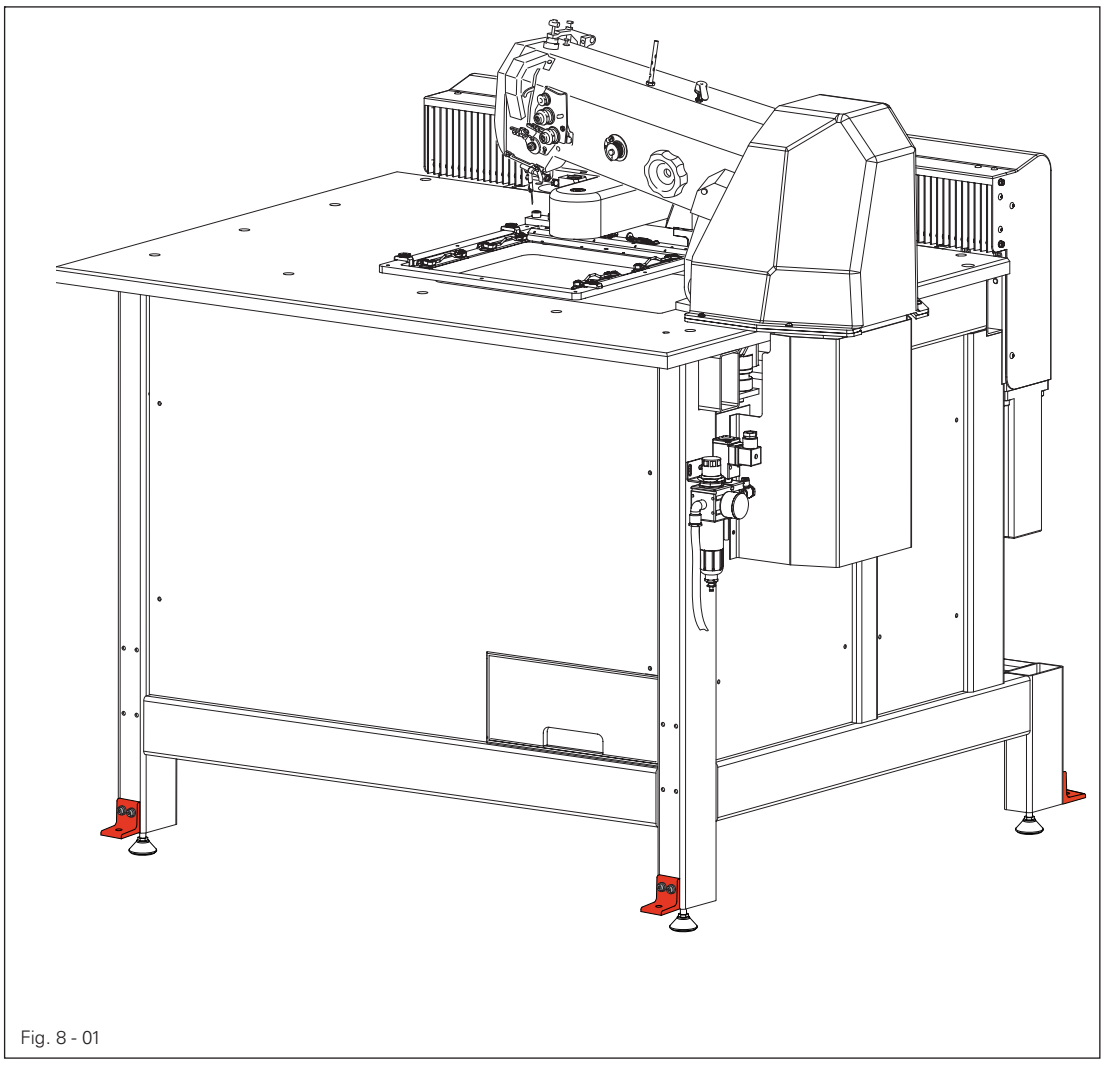

Fig. 8 - 01

- Lift the machine with a forklift from the shipping pallet.
- Screw the four support legs **1** into the stand and place the machine on the ground.

At its installation location, the machine's support legs must be horizontally levelled out in all directions with a spirit level!
Unscrew the red transport angle locks **2**! Tripping hazard!

- Screw the screws **3** back into the stand.

8.02 Mounting the spool holder

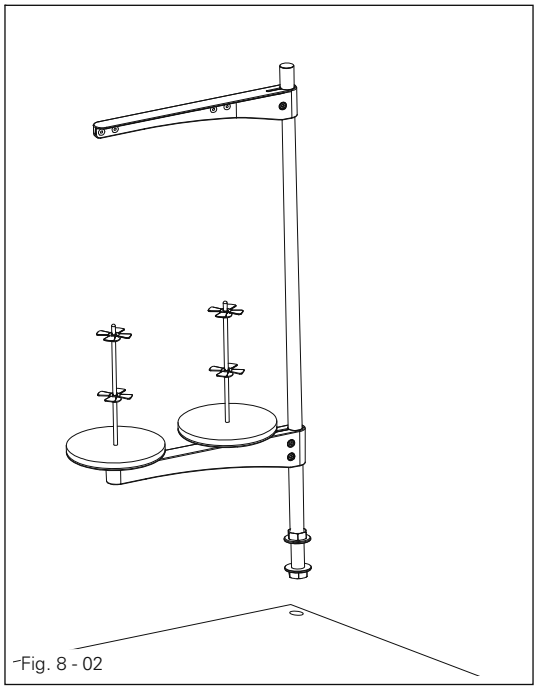

Fig. 8 - 02

- Mount the spool holder according to Fig. 8.02.

8.03 Commissioning

- Before commissioning the machine, clean it thoroughly and lubricate it, or pour in oil, see Chapter 12 Care and Maintenance!
- The machine, in particular the electric wires and pneumatic connection tubes, must be examined for any damage.
- Have skilled personnel check if the machine can be operated with the available mains voltage.



Do not operate the machine if there is any discrepancy.



The machine may only be connected to an earthed socket!

- Connect machine to the compressed air system.
  The manometer on the air filter/lubricator unit must display a pressure of 6 bar.
  If necessary, set to the correct value (see chapter 12.05 Checking / regulating air compression).

8.04 Switching the machine on/off

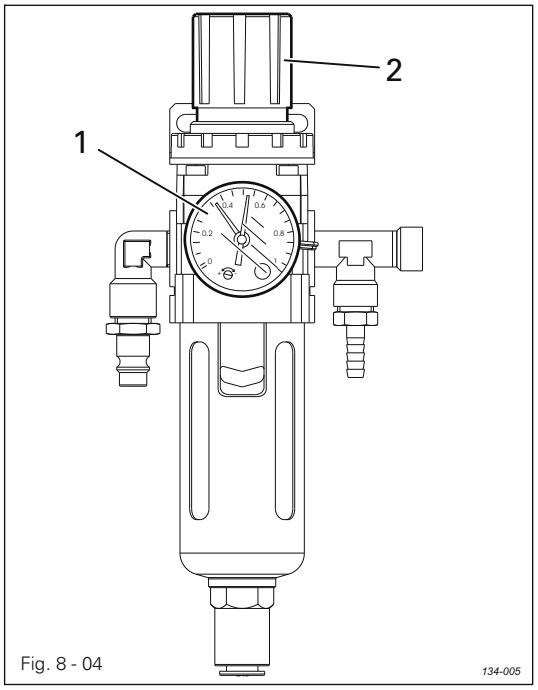

Fig. 8 - 04

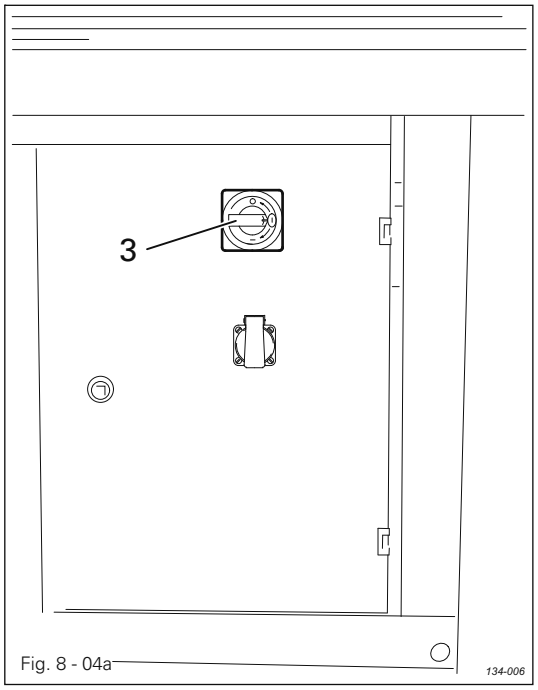

Fig. 8 - 04a

- Check air pressure on pressure gauge **1** and, if necessary, adjust air pressure with adjusting knob **2**.
- Turn main switch **3** to position "I"



- After booting the machine control unit, to start the machine, move it back to its basic position.
- Carry out a test run, see Chapter **10 Sewing.**

When commissioning the machine, the zero points must be checked or adjusted (see Chapter **8.07 Checking / adjusting the zero points**).

- To switch off the machine, turn main switch **3** to position "**0**".

Description of other functions on the display

Input menu

This function is used to call up the input mode, see Chapter **11 Input**.

8.05 Selecting the language and units

- Switch on the machine.



- Call up the input menu.

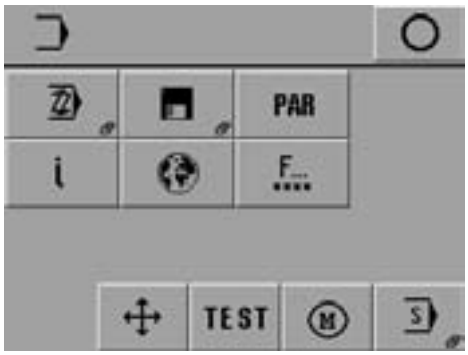



- Call up the settings menu.

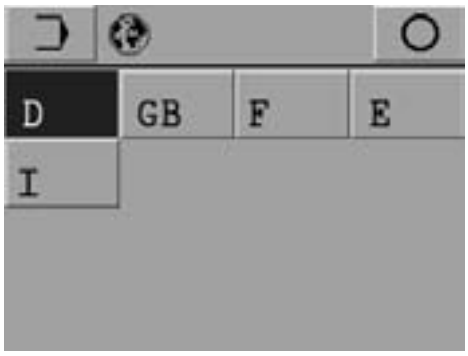

- Select the appropriate language.

8.06 Switching the key tone on / off

- Switch on the machine.



- Call up the input mode.

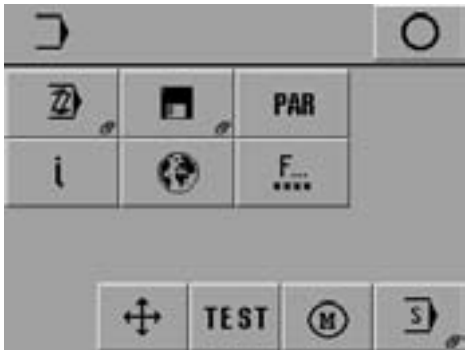

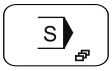

- Select the service menu.

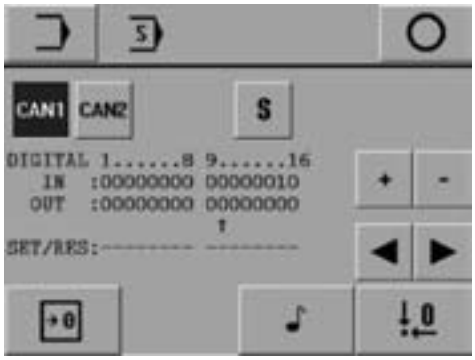



- Switch the key tone off or on.



- Conclude the input.

8.07 Check/adjust zero points

Before commissioning the machine, or after changing the controller or one of the initiators of the jig drive, it is necessary to set the zero points.



- Call up the input mode.

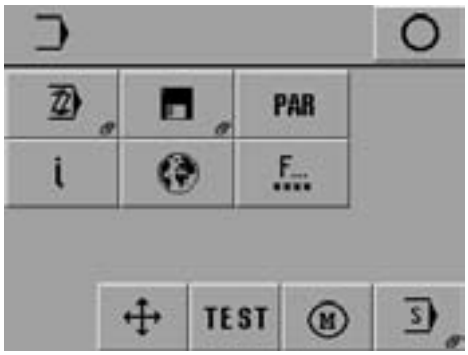

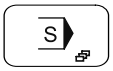

- Select the service menu.

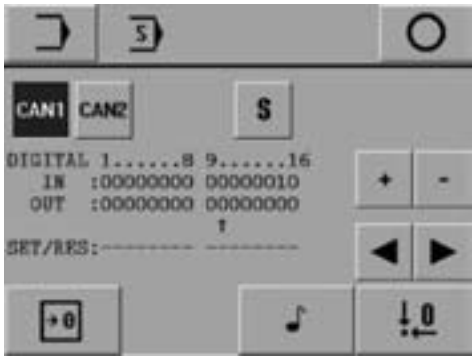

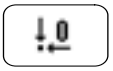

- Call the function "Set zero position".

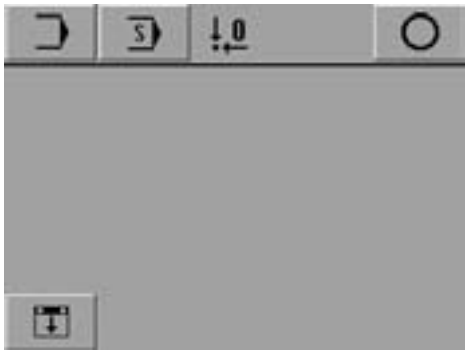



- Insert the jig



Enter ● Confirm the operation and continue the cycle.

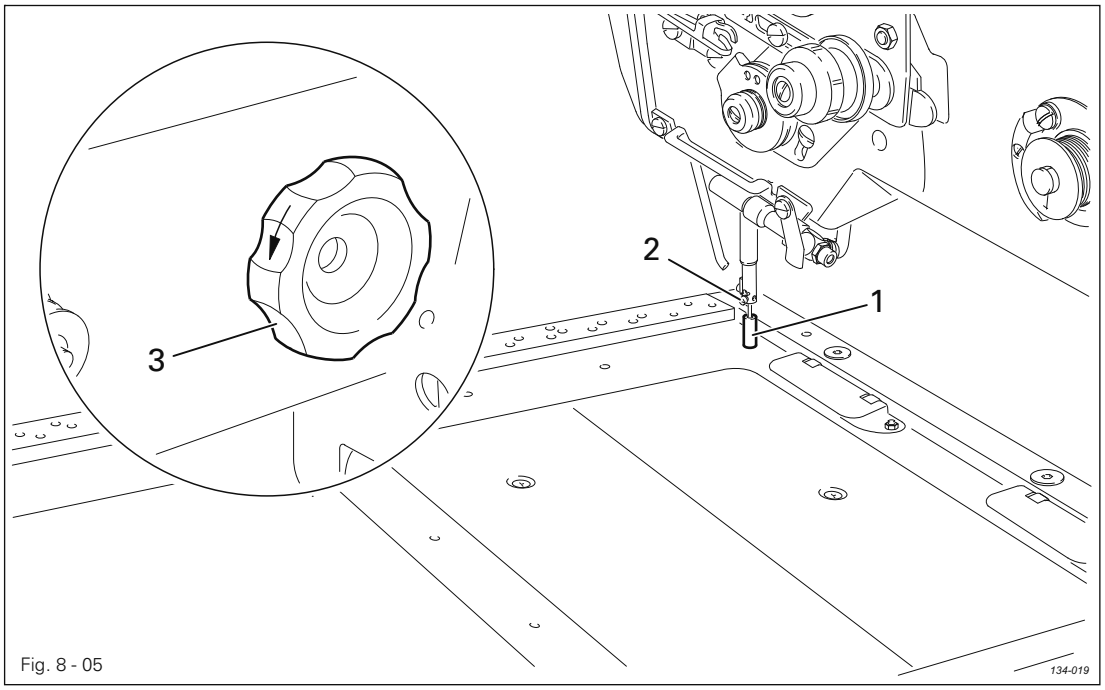

- With screw **2** fasten adjustment pin **1** in the needle bar.
- By turning balance wheel **3** check whether the adjustment pin **1** can be guided into the jig adjustment hole.

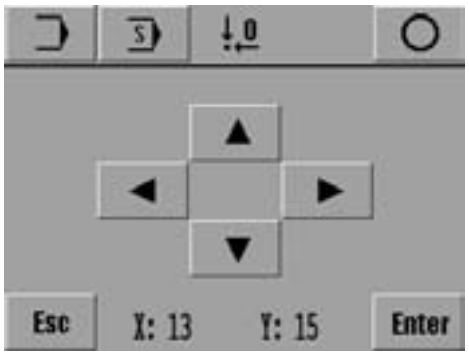

- If necessary, correct the jig position accordingly with the direction symbols.

Enter ● Save the setting, loosen screw **2** and remove adjustment pin **1**.



- Conclude the zero points input..





- Move the machine to the basic position. The machine is ready for operation.

Register 05

9 Preparation

All regulations and instructions in this Instruction Manual are to be observed!
Special attention is to be paid to the safety regulations!

All preparation work is only to be carried out by appropriately trained personnel!

9.01 Inserting the needle

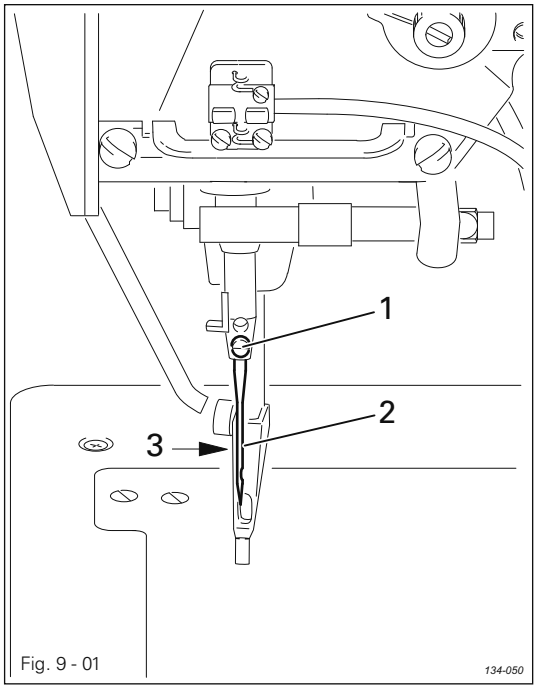

Only use needles from the system intended for the machine, see Chapter **3 Specifications.**

- Switch on the machine.
- Call up the threading aid function.
  The jig moves to its basic position, the sewing start function is blocked.
- Loosen screw **1** and insert needle **2** as far as possible into the needle bar.
- Adjust needle **2** so that the long needle groove **3** is pointing in direction of the top cover of the top part, and tighten screw **1**.
- Start the sewing cycle

or

- Move the machine to its basic position.

9.02 Winding the bobbin thread, adjusting the thread tension

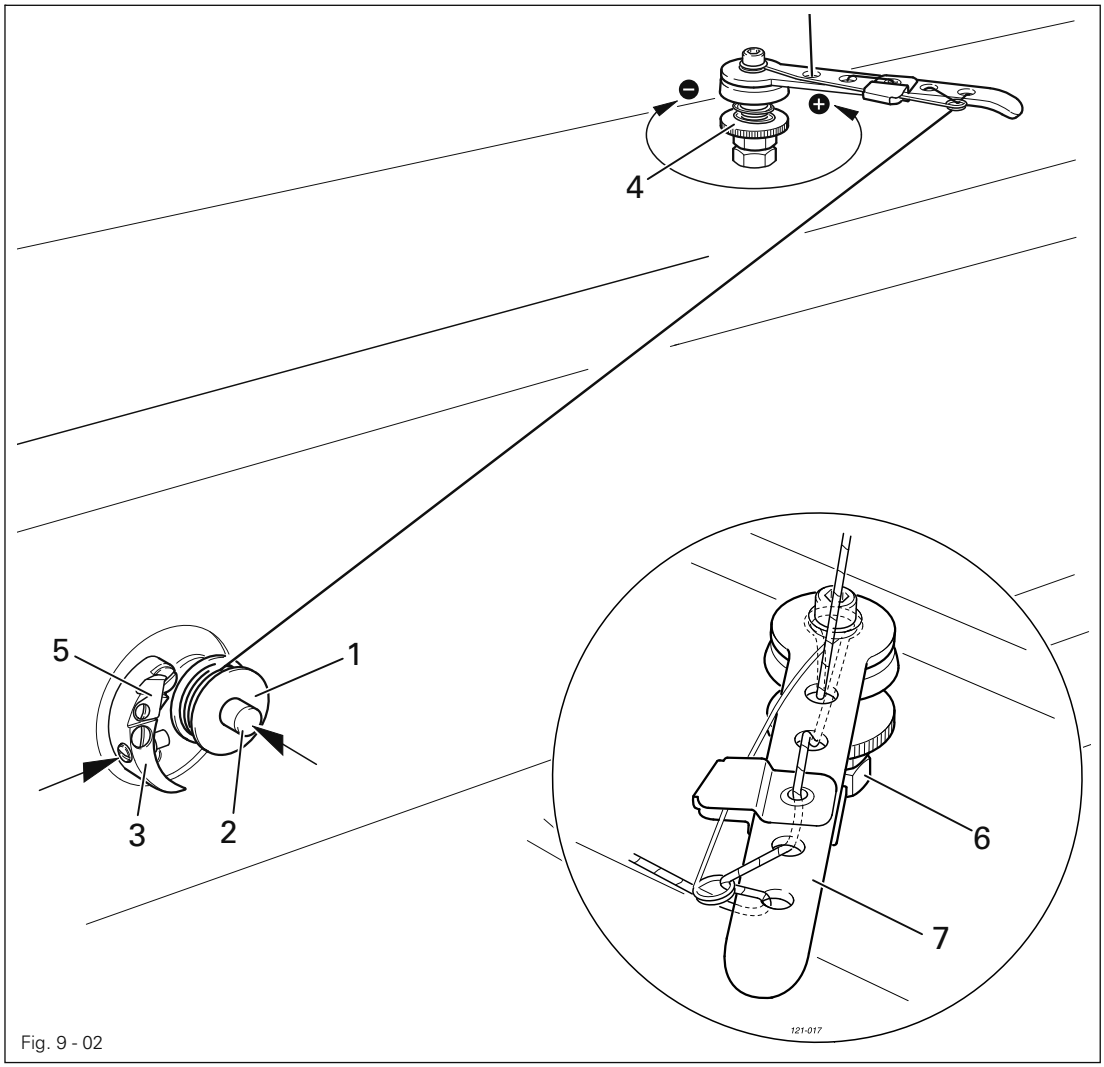

Fig. 9 - 02

- Switch on the machine.
- Place an empty bobbin **1** onto bobbin shaft **2**.
- Thread the bobbin in accordance with Fig. **9-02** and wind it anti-clockwise around bobbin **1** a few times.
- Switch on the bobbin winder while at the same time pressing bobbin winder spindle **2** and lever **3**.

The bobbin fills up during sewing.

- The tension of the thread on bobbin **1** can be adjusted with knurled screw **4**.
- The bobbin winder stops automatically when bobbin **1** is full.
- Remove the filled bobbin **1** and cut the thread on knife **5**.

If the thread is wound unevenly, loosen nut **6** and turn thread guide **7** accordingly. Retighten nut **6** after the adjustment

To adjust the filling capacity, see Chapter **13.05.23 Bobbin winder**.

9.03 Changing the bobbin / adjusting the bobbin thread tension

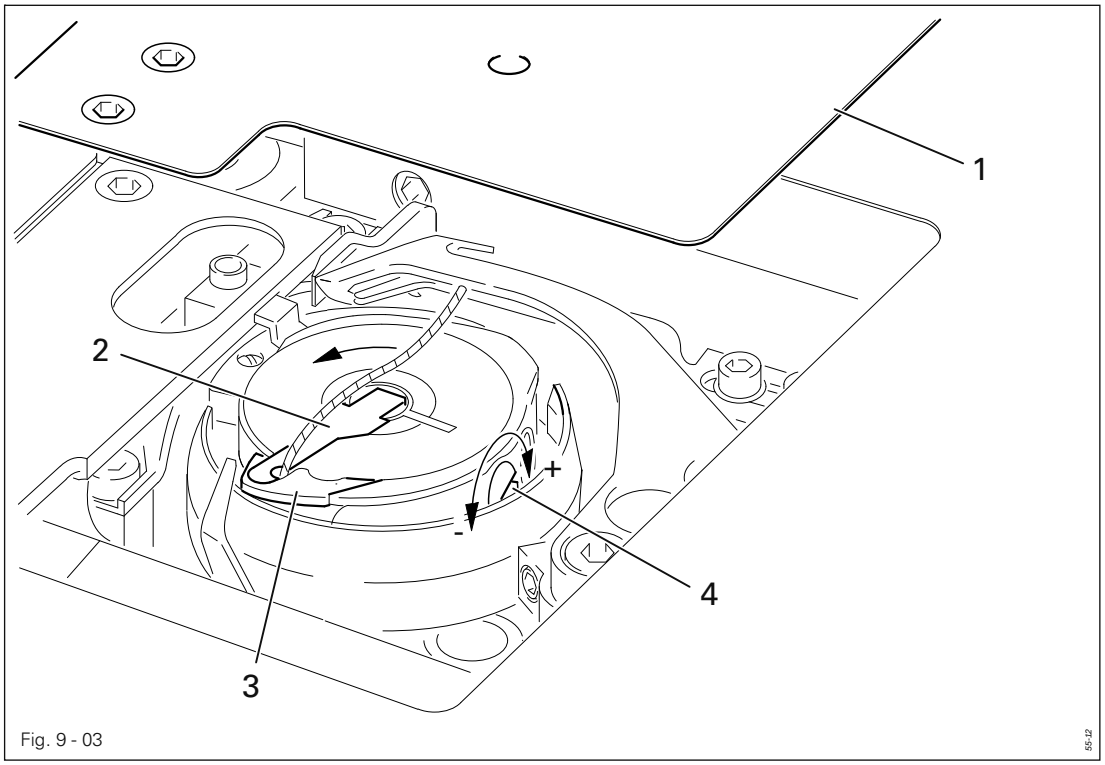

Fig. 9 - 03

- When the number of stitches entered previously under the "bobbin thread stitch counter" function (see Chapter 9.10) have been sewn, or if the "bobbin change" function is called up, the jig moves automatically to its basic position and the hook compartment cover 1 opens.
- Raise latch 2 and remove empty bobbin.
- Insert full bobbin into the hook so that it turns in the direction of the arrow when the thread is pulled out.
- Close latch 2.
- First feed the thread through the groove and then around the horn of the bobbin case 3 and into the recess of latch 2.
- Adjust the bobbin thread tension by turning screw 4
- Start the sewing cycle

or

- Move the machine to its basic position.

9.04 Threading the needle / adjusting the needle thread tension

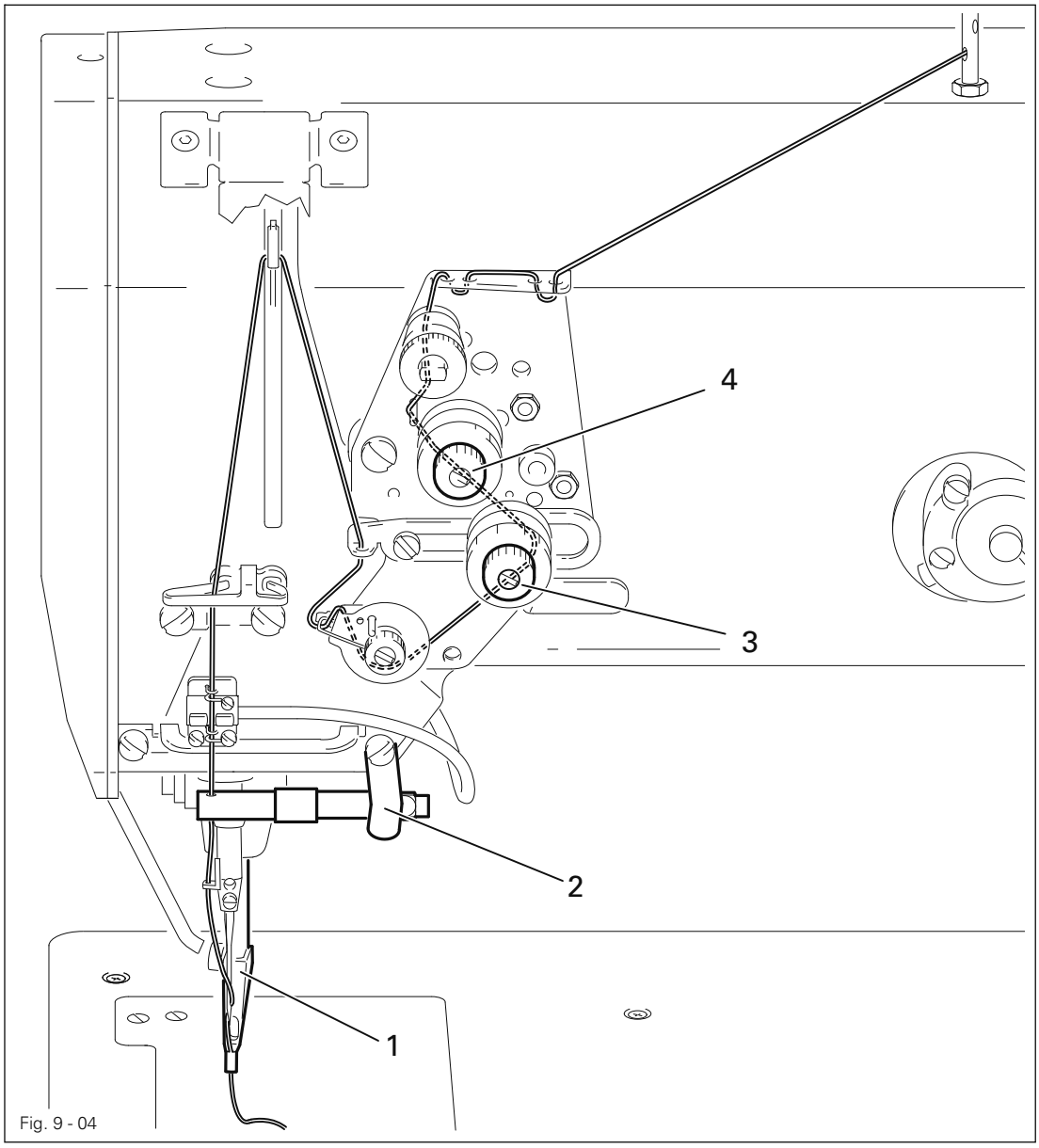

Fig. 9 - 04

- Switch on the machine.
- Call up the threading aid function.
  The jig moves to its basic position, the vibrating presser is lowered, the sewing start function is blocked.
- Thread needle thread as illustrated above.
- Adjust needle thread tension by turning knurled screw **3**.

The secondary tension can be adjusted by turning knurled screw **4**.

- Start the sewing cycle

or

- Move the machine to its basic position.

9.05 Selecting the program number

- Switch on the machine.

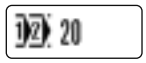

- Call up the program number input menu.



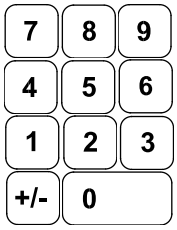

- Select the desired program number (0 – 9999) using the number block.



- Confirm the selection and quit the selection menu.

Description of the other functions



Clear
This function sets the value at "0".



Arrow keys
These functions increase or reduce the value.



Esc
This function stops the input without taking over the value entered.



Sequence selection
This function opens the menu for selecting or configuring the sequence, see Chapter 9.06 Selecting / configuring the sequence.



Linked programs
This function opens the menu for selecting or combining linked programs, see Chapter 9.07 Selecting / combining linked programs.



Automatic program selection
When this function is active, the corresponding seam program is identified and selected automatically with the clamp code, see Chapter 9.09 Automatic Program Selection.

9.06 Selecting / configuring a sequence

9.06.01 Selecting a sequence

Instead of selecting a program number, it is also possible to select a corresponding sequence, providing that individual seam programs have been allocated to a sequence, see Chapter **9.06.02 Configuring a sequence**

- Switch on the machine.

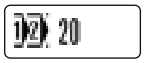

- Call up the menu for entering the program number.

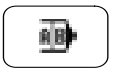

- Call up the menu for entering the sequence.



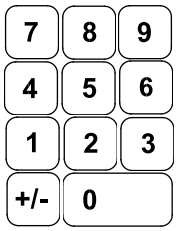

- Select the desired sequence number (**0** – **9**) using the number block.



- Confirm the selection and quit the selection menu.

Description of the other functions



Clear
This function sets the value at "**0**".



Arrow keys
These functions increase or reduce the value.



Esc
This function stops the input without taking over the value entered.

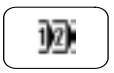

Program selection
This function opens the menu for selecting a program, see Chapter **9.05** Selecting a program number.



Linked programs
This function opens the menu for selecting or combining linked programs, see Chapter **9.07 Selecting / combining linked programs**.



Automatic program selection
When this function is active, the corresponding seam program is identified and selected automatically with the clamp code, see Chapter **9.09 Automatic Program Selection.**

9.06.02 Configuring a sequence

Up to 8 seam programs can be allocated to a sequence. During sewing the seam programs of a selected sequence appear as a function on the display and can be selected directly.

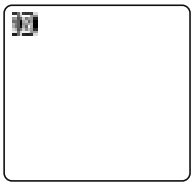

- Call up the menu for entering the sequence and select the desired sequence number without leaving the selection menu, see 9.06.01 Selecting a sequence.
- Call up the sequence programming function.
- Configure the sequence from existing seam programs by entering the program numbers on the number block.



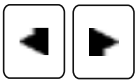

- The cursor in the window shows, which seam program has been taken out of the group, or at which position a new seam program has been inserted. The cursor is moved with the arrow keys.



- If applicable, insert (INS) the seam program at the current cursor position, or delete (DEL) the marked seam program from the sequence.



- Conclude the sequence programming function.

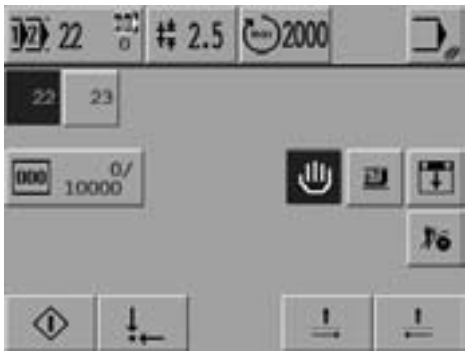



To enable, for example, quicker access to up to 8 different seam programs, the function for automatic switching to the next seam program of a sequence function can be switched off with parameter "114", see Chapter 13.09.02 List of parameters.

9.07 Selecting / combining linked programs

9.07.01 Selecting linked programs

Unlike sequences, linked programs can all be processed with one jig. To be able to select linked programs, individual seam programs must have been linked, see Chapter **9.07.02** Combining linked programs.

- Switch on the machine.

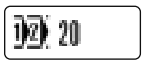

- Call up the menu for entering the program number.



- Call up the menu for entering linked programs.



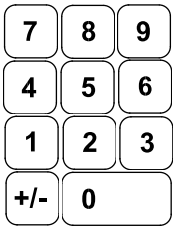

- Select the desired number for linked programs (**0** – **9**) using the number block.



- Confirm the selection and quit the selection menu.

Description of the other functions



Clear
This function sets the value at "**0**".



Arrow keys
These functions increase or reduce the value.



Esc
This function stops the input without taking over the value entered.

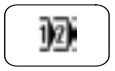

Program selection
This function opens the menu for selecting a program, see Chapter **9.05 Selecting a program number.**

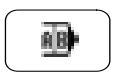

Sequence selection
This function opens the menu for selecting or configuring a sequence, see Chapter **9.06 Selecting / configuring a sequence.**



Automatic program selection
When this function is active, the corresponding seam program is identified and sel

9.07.02 Combining linked programs

Up to 8 seam programs can be combined. After the corresponding program number has been selected during sewing, the combined seam programs appear as a function on the display and can be selected directly.

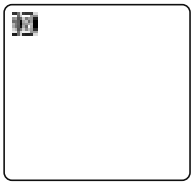

- Call up the menu for entering combined programs and select the desired number without leaving the selection menu, see Chapter 9.07.01 Selecting linked programs.
- Call up the combined programs programming function.

- Combine existing seam programs by entering the program numbers on the number block.



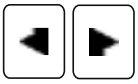

- The cursor in the window shows, which seam program has been taken out of the combination, or at which position a new seam program has been inserted. The cursor is moved with the arrow keys.



- If applicable, insert (INS) the seam program at the current cursor position, or delete (DEL) the marked seam program from the combination.



- Conclude programming.

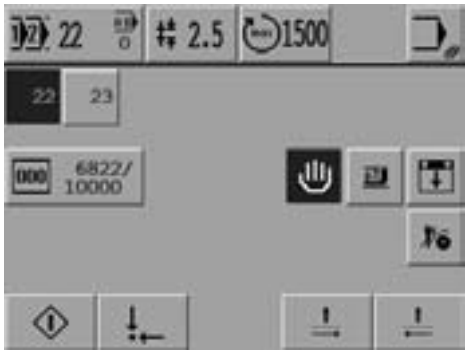



Switching among combined programs always takes place automatically.

9.08 Enter template monitoring/ template code

This function can only be selected if RFID device is attached. Parameter "**202**" must be set to value "**1**", see also **chapter** 13.**09.02 Parameter list**.

The template is marked with a code for template monitoring. Control recognises the code and prevents sewing with the wrong combination of seam program and template.
Template monitoring (parameter "**109**") must be activated (value "**1**") and the template code must be entered into the relevant seam programs.

- Switch machine on.
- Call up mode "Entry"

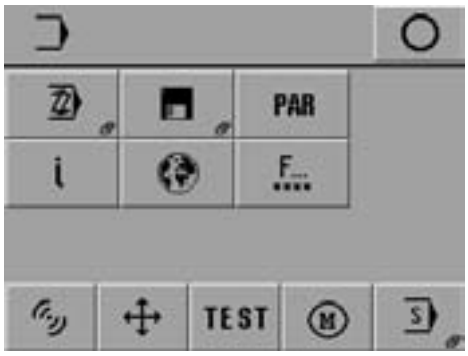

- Call up menu for entry of the template codes.



- Insert template.

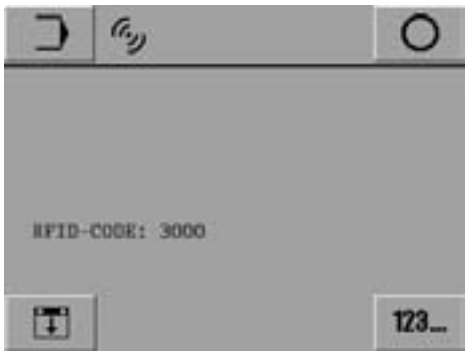

123.. ● Call up mode "Code entry".

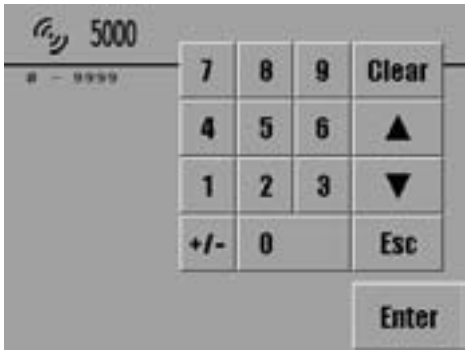

● Enter template code.

Enter ● Confirm entry.

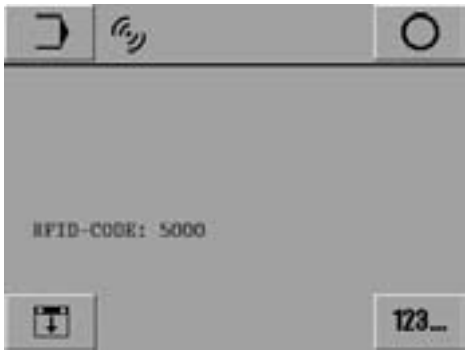

○ ● End template code entry.

9.09 Automatic program selection

9.09.01 Calling up the automatic program selection function

This function can only be selected if RFID device is attached. Parameter "**202**" must be set to value "**1**".

Alternatively template recognition can also be carried out via barcode (parameter "**202**" to value "**2**"). See also **chapter** 13**.09.02 Parameter list.**

In the automatic program selection, the relevant seam program is selected automatically via the program number stored on the template, e.g. program number and template code are identical, see also **chapter 9.09.02 Automatic program selection / enter program number**. The automatic program number selection (parameter "**109**") must be activated (value"**2**"), see also **chapter 13.09.02 Parameter list.**

- Switch on the machine.

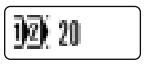

- Call up the menu for entering the program number.





- Select the automatic program selection function.

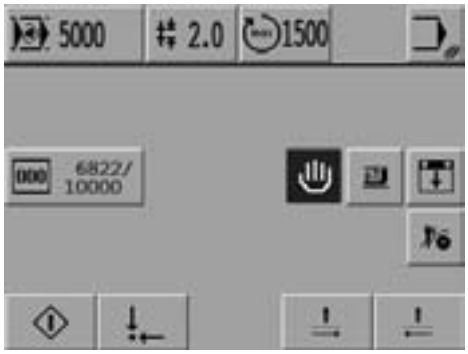

9.09.02 Automatic program selection/ enter program number



- Call up mode "Entry"





- Call up menu for entry of the template ID.





- Insert template.

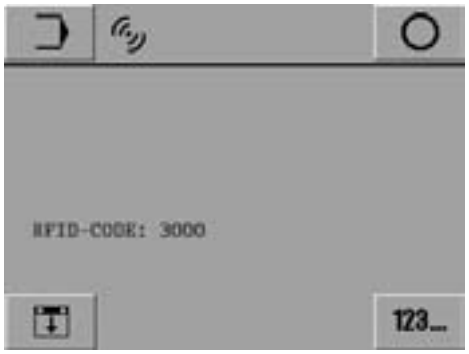

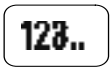

- Call up mode "Code entry".

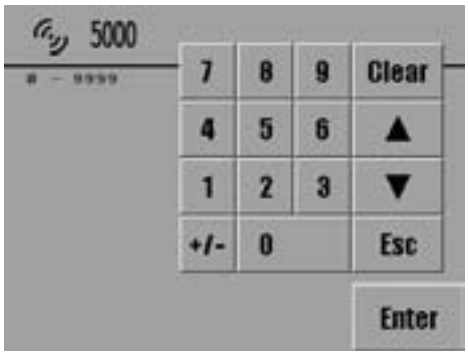

- Enter program number.

Enter

- Confirm entry.

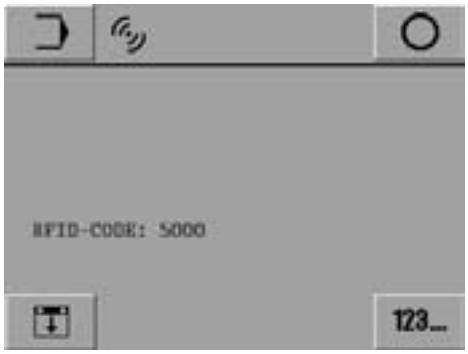

- End program number entry.

9.10 Setting the bobbin thread stitch counter

- Switch on the machine.



- Call up the menu for entering the number of bobbin thread stitches.



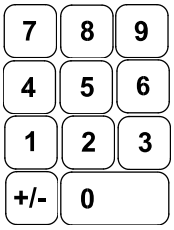

- Enter the number of stitches on the number block.



- Conclude the input.



After sewing the number of bobbin thread stitches, the machine stops automatically for changing the bobbin.

Description of the other functions



Clear (on number block)
This function sets the input value at "0".



Arrow keys
These functions increase or reduce the value.



Esc
This function stops the input without taking over the value entered.

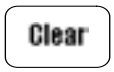

Clear (in foot text)
This function sets the bobbin thread counter (number of stitches sewn) at "0".

10 Sewing

The machine may only be operated by appropriately instructed personnel! The operating staff must make sure that only authorized persons are in the danger area of the machine!

In particular for the production, in addition to the input mode, see Chapter **11 Input**, the sewing mode is available. Here, depending on the program selection and the machine status, all relevant functions and settings for the production are shown on the display. Automatic operation is standard, but it is possible to switch to manual operation when setting up and checking operating sequences.

Before production the following conditions must be fulfilled:

- All safety devices must be attached and all covers closed see, Chapter **1.06 Danger warnings**.
- The machine must be properly installed and commissioned in accordance with Chapter **8 Installation and commissioning**.
- All setting-up work must have been carried out, see Chapter **9 Setting-up**.

10.01 Sewing with individual programs

- Switch on the machine.
- Select the desired program number, see Chapter **9.05** Selecting a program number.

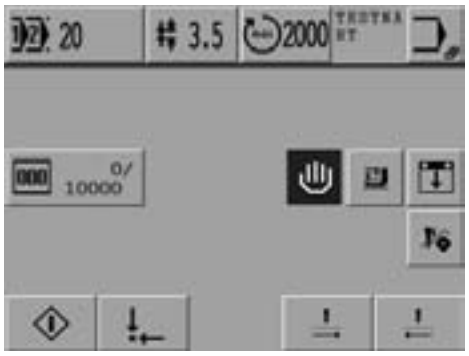

- Insert the jig.



- Close the jig indexing function .



- Start the sewing cycle.

Description of the functions

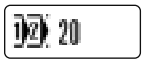

Program number selection
This function opens the menu for entering the program number. The current program number is shown in the symbol together with the appropriate parts program number.



Standard stitch length
This function opens the menu for entering the standard stitch length. The current stitch length is shown in the symbol.



Maximum speed
This function opens the menu for entering the maximum speed. The current maximum speed is shown in the symbol.

Comment
Here a comment assigned to the program is indicated.



Input menu
This function is used to call up the "input mode" see Chapter **11 Input**.

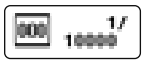

Bobbin thread stitch counter
This function opens the menu for entering and resetting the number of stitches for the bobbin thread, see Chapter **9.09 Setting the bobbin thread stitch counter**.



Manual / automatic program start
This functions changes between automatic and manual program start. The corresponding symbol of the current operating status is shown respectively.



In the case of a manual program start, the jig is locked into position and the sewing cycle is started by operating the foot switch or by calling up the "open/close jig" and "start" functions.



In the case of an automatic program start, the jig is automatically locked into position when inserted and the sewing cycle starts automatically.



Vibrating presser up / down
This function is used to raise or lower the vibrating presser. In addition the thread clamp is opened or closed.



Search (only within the program cycle)
With this function the sewing head is raised and the carriage can be moved near the desired seam pattern point with appropriate direction symbols. After the position has been confirmed, the machine moves towards the nearest point of the seam pattern.



Threading aid
With this function the feeder and the jig are moved away from the machine sewing head. The bobbin cover and the thread clamp are opened, the vibrating presser is lowered.



Basic position
This function is used to move the jig guide, sewing station and clamp drive unit to the basic position.



Tacting forwards
This function is used to move forwards in sections in the seam pattern tact for tact. The seam cycle is sewn automatically, if the function is pressed longer.



Tacting backwards

This function is used to move backwards in sections in the seam pattern tact for tact.

The seam cycle is sewn automatically, if the function is pressed longer.

10.02 Sewing with sequences

To sew with the function for moving automatically to the next sequence, parameter "**114**" must be set at value "**1**", see Chapter **13.09.02 List of parameters**.

- Switch on the machine.
- Select the desired sequence, see Chapter **9.06.01 Selecting a sequence**.

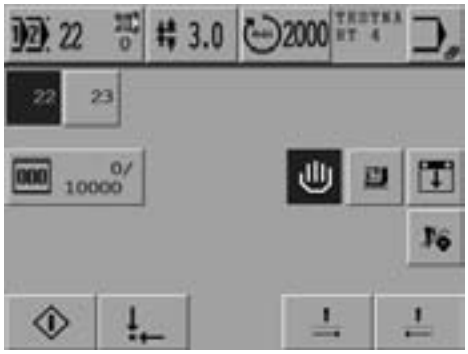

- Insert the jig
- Start sewing process (only available if manual program start is selected).

Description of the functions



Program number selection
This function opens the menu for entering the program number. The current program number is shown in the symbol. If the function for moving automatically to the next sequence is activated, the sequence symbol is shown as inverse.



Standard stitch length
This function opens the menu for entering the standard stitch length. The current stitch length is shown in the symbol.



Maximum speed
This function opens the menu for entering the maximum speed. The current maximum speed is shown in the symbol.

Comment
Here a comment assigned to the program is indicated.



Input menu
This function is used to call up the "input mode" see Chapter **11 Input.**



Individual program
This function depends on the setting of parameter "**114**" (moving automatically to next sequence), see Chapter **13.09.02 List of parameters.**
If the function for moving automatically to the next sequence is activated (value "I", this) function is used to show the symbol for the next individual program to be sewn as inverse.
If the function for moving automatically to the next sequence is deactivated (value "**0**",) this function is used for the quick selection of the highlighted seam programs.



Bobbin thread stitch counter
This function opens the menu for entering and resetting the number of stitches for the bobbin thread, see Chapter 9.10 Setting the bobbin thread stitch counter.



Vibrating presser up / down
This function is used to raise or lower the vibrating presser. In addition the thread clamp is opened or closed.



Search (only within the program cycle)
With this function the sewing head is raised and the carriage can be moved near the desired seam pattern point with appropriate direction symbols. After the position has been confirmed, the machine moves towards the nearest point of the seam pattern.



Threading aid
With this function the feeder and the jig are moved away from the machine sewing head. The bobbin cover and the thread clamp are opened, the vibrating presser is lowered.



Basic position
This function is used to move the machine to the basic position.



Tacting forwards
This function is used to move forwards in sections in the seam pattern tact for tact. The seam cycle is sewn automatically, if the function is pressed longer.



Tacting backwards
This function is used to move backwards in sections in the seam pattern tact for tact. The seam cycle is sewn automatically, if the function is pressed longer.

10.03 Sewing with linked programs

- Switch on the machine.
- Select the desired number for linked programs, see Chapter **9.07.01 Selecting linked programs.**

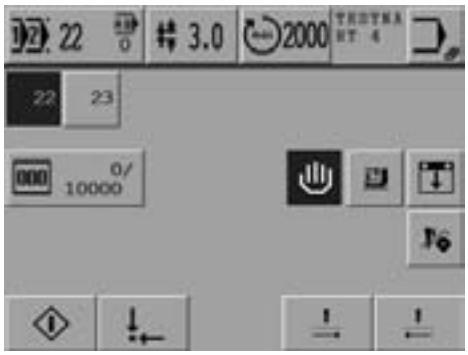

- Insert the jig.
- Start sewing process (only available if manual program start is selected).

Description of the functions

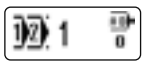

Program number selection
This function opens the menu for entering the program number. The current program number is shown in the symbol.



Standard stitch length
This function opens the menu for entering the standard stitch length. The current stitch length is shown in the symbol.



Maximum speed
This function opens the menu for entering the maximum speed. The current maximum speed is shown in the symbol.

Comment
Here a comment assigned to the program is indicated.



Input menu
This function is used to call up the "input mode" see Chapter **11 Input.**



Individual programs
With these functions it is possible to select the next individual program due to be processed.



Bobbin thread stitch counter
This function opens the menu for entering and resetting the number of stitches for the bobbin thread, see Chapter **9.09 Setting the bobbin thread stitch counter.**



Manual/ automatic program start

This function toggles between automatic and manual program start. The relevant symbol for the current operations mode is displayed.



In a manual program start, fixing the template and starting of the sewing process is carried out by pressing the treadle switch, or by calling the functions "Open/close template" and "Start".



If automatic program start is selected, the template is automatically fixed when inserted, and the sewing process starts automatically.



Vibrating presser up / down

This function is used to raise or lower the vibrating presser. In addition the thread clamp is opened or closed.



Search (only within the program cycle)

With this function the sewing head is raised and the carriage can be moved near the desired seam pattern point with appropriate direction symbols. After the position has been confirmed, the machine moves towards the nearest point of the seam pattern.



Threading aid

With this function the feeder and the jig are moved away from the machine sewing head. The bobbin cover and the thread clamp are opened, the vibrating presser is lowered.



Basic position

This function is used to move the machine to the basic position.



Tacting forwards

This function is used to move forwards in sections in the seam pattern tact for tact. The seam cycle is sewn automatically, if the function is pressed longer.



Tacting backwards

This function is used to move backwards in sections in the seam pattern tact for tact. The seam cycle is sewn automatically, if the function is pressed longer.

10.04 Sewing with automatic program selection

For sewing with automatic program selection, the parameter "**109**" must be set at "**2**", see Chapter **13.09.02 List of parameters**

- Switch on the machine.
- Select the automatic program selection function, see Chapter **9.09.01 Automatic program selection**.

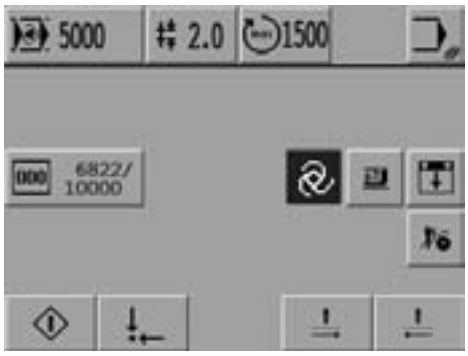

- Insert the jig.
- Close the jig indexing function (only if manual program start has been selected).
- Start the sewing cycle (only if manual program start has been selected).

Description of the functions

Program number selection
This function opens the menu for entering the program number. The current program number is shown in the symbol.

Standard stitch length
This function opens the menu for entering the standard stitch length. The current stitch length is shown in the symbol.

Maximum speed
This function opens the menu for entering the maximum speed. The current maximum speed is shown in the symbol.

Input menu
This function is used to call up the "input mode" see Chapter **11 Input.**

Bobbin thread stitch counter
This function opens the menu for entering and resetting the number of stitches for the bobbin thread, see Chapter **9.10 Setting the bobbin thread stitch counter.**

Manual / automatic program start
This functions changes between automatic and manual program start. The corresponding symbol of the current operating status is shown respectively.



In the case of a manual program start, the jig is locked into position and the sewing cycle is started by operating the foot switch or by calling up the "open/close jig" and "start" functions.



In the case of an automatic program start, the jig is automatically locked into position when inserted and the sewing cycle starts automatically.



Vibrating presser up / down

This function is used to raise or lower the vibrating presser. In addition the thread clamp is opened or closed.



Search (only within the program cycle)

With this function the sewing head is raised and the carriage can be moved near the desired seam pattern point with appropriate direction symbols. After the position has been confirmed, the machine moves towards the nearest point of the seam pattern.



Threading aid

With this function the feeder and the jig are moved away from the machine sewing head. The bobbin cover and the thread clamp are opened, the vibrating presser is lowered.



Basic position

This function is used to move the machine to the basic position.



Tacting forwards

This function is used to move forwards in sections in the seam pattern tact for tact. The seam cycle is sewn automatically, if the function is pressed longer.



Tacting backwards

This function is used to move backwards in sections in the seam pattern tact for tact. The seam cycle is sewn automatically, if the function is pressed longer.

10.05 Program interruption

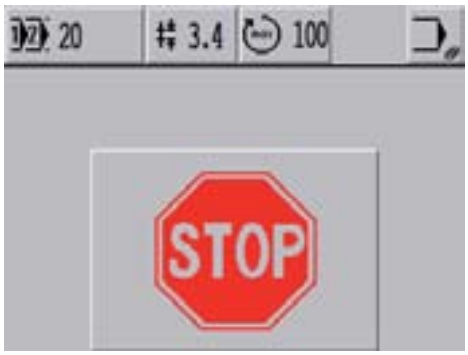

- A program sequence can be interrupted by pressing the "stop" key on the control panel.

If the machine is stopped in this way, the sewing unit and the cjig drive are not in their starting position!

- Continue program cycle

For a more detailed explanation of additional functions see **chapter 10.01 Sewing with individual programs**.

10.06 Error messages

If a malfunction occurs, an error code appears on the display. An error message may be caused by incorrect operation, machine defects, as well as by overload conditions.
(For a description of the error codes see Chapter **14.02 Description of the error codes)**.

Errors when connecting outputs

If an error occurs when connecting an output, the output concerned is shown with the desired switching state (**0**) or (I).
In this case (**0**) means the output should be disconnected and (I) means that the output should be connected.
In the next line the cause leading to the error is displayed.
The target state for maintaining undisturbed operation is shown in brackets.
In the following example the output **Y1** is to be connected.
Requirement: **E1** must be set at (**1**).

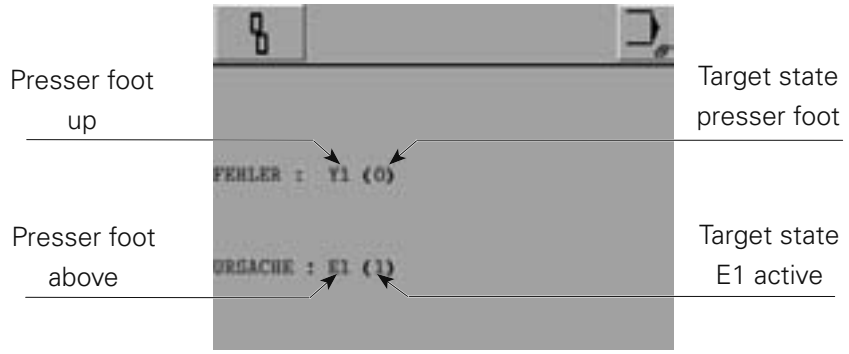

- Check **E1** and eliminate error.

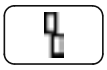

- Acknowledge elimination of the error..

11 Input

In addition to the functions for entering or altering seam programs, in the input mode there are functions for displaying information, for program management, for machine configuration and settings (country settings and access codes etc.), as well as for supporting service and adjustment work.
In the input mode the machine start function is blocked to avoid an unintentional start-up of the machine.

11.01 Overview of the functions in the input mode

- Switch on the machine.



- Call up the input mode.

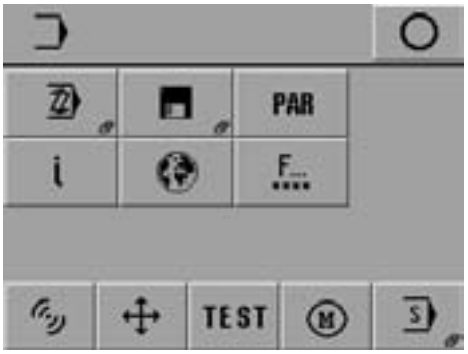

Description of the functions

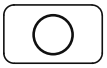

Conclude input
This function is used to conclude the input, and the machines changes to the sewing mode.



Seam program input
This function is used to call up the menu for entering or altering seam programs, see Chapter **11.02 Creating / altering seam programs.**



Program management
This function is used to manage the data from the machine memory and CD-Card, see Chapter **11.04 Program management.**



Parameter settings
This function is used to call up the menu for altering parameter settings, see Chapter **13.09 Parameter settings**.



Info

This function opens a menu for displaying the following information:

- current software status of the machine
- current firmware status of the machine
- current firmware status of the control panel
- current firmware status of the motor
- day piece counter
- operating hours meter
- production hours meter



The day piece counter can be reset with the "Clear" function.



Country settings

This function opens a menu for selecting the language shown on the control panel, see Chapter **8.05 Selecting the language and units**.



Rights of access

This function opens a menu for fixing the rights of access, see Chapter **11.05 Rights of access.**



Template code

This function calls up the menu for template code entry, see **chapter 9.08 Template monitoring / template code entry** or **9.09.02 Automatic program selection/ enter program number** .

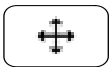

Stepping motors

This function opens a menu for moving the stepping motors.



Test template drive

This function opens a menu for calling and running a program for testing the reference points of the template drive, see **chapter 13.06.04 Reference points of the template drive**.

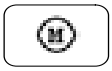

Sewing motor

This function opens a menu for testing and adjusting the sewing motor, see Chapter **13.08 Menu for the sewing motor.**

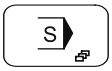

Service menu

This function is used to call up the menu for selecting various service functions, see Chapter **13.07 Service menu.**

11.02 Creating / altering seam programs

- Switch on the machine.



- Call up the input mode.



- Call up the seam program input function.



- Insert the jig.



- Close the jig indexing function.

Enter

- Confirm the operation.

7 8 9
4 5 6
1 2 3
+/- 0

- Reinsert the desired program number or select the desired program.

Enter

- Confirm the seam number selection.

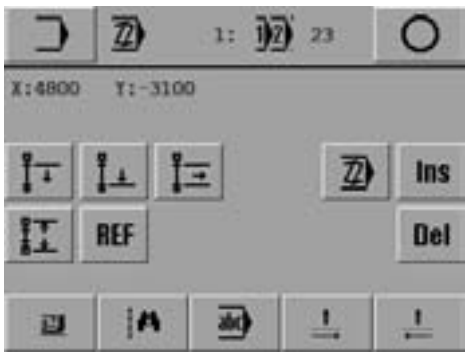

Description of the functions



Input menu
This function ends the programming operation and opens the basic input menu, see Chapter 11.01 Overview of the functions in the input mode.

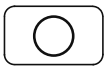

Conclude input
This function is used to conclude the input, and the machines changes to the sewing mode.



Mark block start
This function is used to define the start of a block, see Chapter 11.02.02 Block functions.



Mark block end
This function is used to define the end of a block, see Chapter 11.02.02 Block functions.



Block functions
This function opens a menu for entering block functions, see Chapter 11.02.02 Block functions.



Image functions
This function opens a menu for entering image functions, see Chapter 11.02.03 Image functions.



Coordinate reference points
This function is used to set the coordinates on the display at "0", in this way creating a new reference point.



Edit
After selecting this function, the current section can be edited.



Insert
This function is used to insert functions or blocks, see Chapter 11.02.04 Inserting functions.



Delete
This function is used to delete the current section.



Sewing foot up/down
This function is used to raise or lower the sewing foot. In addition the thread trapper is opened or closed.

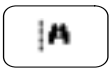

Search
With this function the sewing head is raised and the carriage can be moved near the desired seam pattern point with appropriate direction symbols. After the position has been confirmed, the machine moves towards the nearest point of the seam pattern.



Comment
This function opens a menu for entering a comment on the current program, see Chapter 11.02.01 Entering a comment.



Tacting forwards
This function is used to move forwards in sections in the seam pattern tact for tact. The seam cycle is sewn automatically, if the function is pressed longer.



Tacting backwards
This function is used to move backwards in sections in the seam pattern tact for tact. The seam cycle is sewn automatically, if the function is pressed longer.

11.02.01 Entering a comment

In the seam programming function, it is possible to add a comment to the seam program, after calling up the appropriate function. The comment is displayed as information about the corresponding seam program with the program selection function and the program management function.

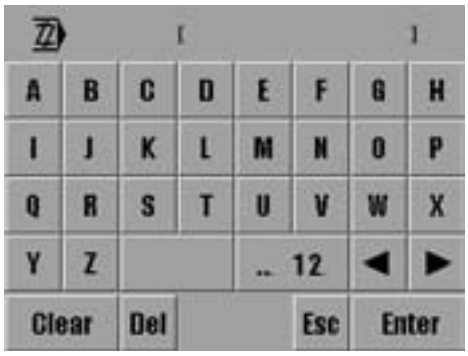

P R G

- Enter the desired text, e.g. "PRG".

.. 12

- Change to number input.

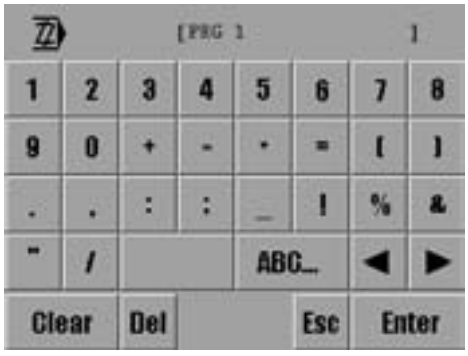

1

- Enter the desired number, e.g. "**1**".

Enter

- Conclude the comment input.

11.02.02 Block functions

- Switch on the machine.



- Call up the input mode.



- Call up the seam program input function.

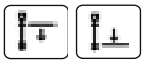

- Define block start and block end
  After a desired point in the program has been selected with the tacting through the program function, it is possible to define the block start with the "mark block start" function. The block marking must be concluded by defining a block end. To do so, tact through the program till reaching the desired point and then operate the "mark block end" function. When tacking through the program, the marked block can be recognised by the inverse symbol of the section number.



- Call up the block functions.

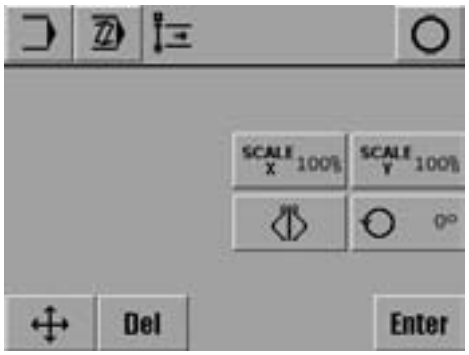

Description of the functions



Conclude input
This function is used to conclude the input, and the machine changes into the sewing mode.



Enlargement factor X-axis
This function is used to enlarge or reduce the block in the X-direction.

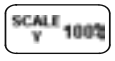

Enlargement factor Y-axis
This function is used to enlarge or reduce the block in the Y-direction.



Mirror
This function is used to mirror the block. Mirroring takes place on the straight line, which runs parallel to the Y-axis and through the block start point.

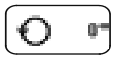

Turn
This function is used to turn the block. The block is turned around the block start point in an anti-clockwise direction.



Shift block

After this function has been selected, a new point must be approached with the clamp drive. With the enter function, this point is taken over and the block shifted.



Delete

When this function is selected, the block is deleted.



Enter

Conclude the block function input and carry out block manipulation.

11.02.03 Image functions

- Switch on the machine.



- Call up the input mode.



- Call up the seam program input function.



- Call up image functions.

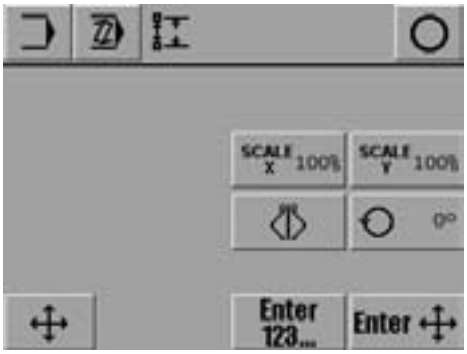

Description of the functions



Conclude input
This function is used to conclude the input, and the machine changes into the sewing mode.



Enlargement factor X-axis
This function is used to enlarge or reduce the image in the X-direction. The operation is concluded by selecting the point of symmetry either with the number keys or with the control keys.

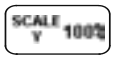

Enlargement factor Y-axis
This function is used to enlarge or reduce the image in the Y-direction. The operation is concluded by selecting the point of symmetry either with the number keys or with the control keys.



Mirror
This function is used to mirror the image. The operation is concluded by selecting the point of symmetry either with the number keys or with the control keys.

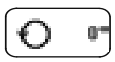

Turn
This function is used to turn the image. The image is turned in an anti-clockwise direction. The operation is concluded by selecting the point of symmetry either with the number keys or with the control keys.



Shift image
After this function has been selected, a new point must be approached with the clamp drive. With the enter function, this point is taken over and the image is shifted from the current position to the end of the program.



Point of symmetry using number keys

The point of symmetry is defined by entering the coordinates with number keys.

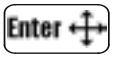

Point of symmetry using control keys

With this function the point of symmetry is approached (entered) by pressing the appropriate direction symbols.

11.02.04 Inserting functions

- Switch on the machine.



- Call up the input mode.



- Call up the seam program input function.



- Call up "insert" functions.

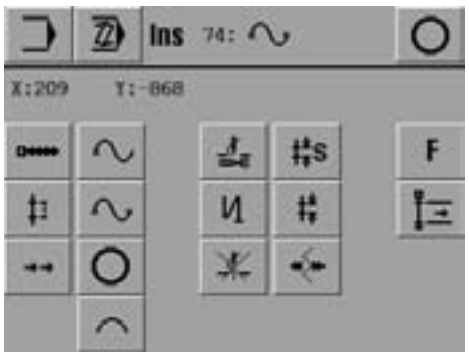

Description of the functions



Conclude input (in status bar)
This function is used to conclude the input, and the machine changes into the sewing mode.



Straight line
A straight line is a direct connection between two points.
To enter a straight line, a stitch length must be defined.



Single stitch
A single stitch or feed motion is entered without taking the stitch length into consideration.
The single stitch or feed motion can be max. 6 mm.



Fast motion
The fast motion function is used for the quick motion of the jig drive. Both axes are moved independently from each other to the end point as quickly as possible. The resulting distance moved is therefore not a straight line (watch out for obstacles on the jig). If the path has to be exact, it is necessary to work with a straight line or curve without start sewing.



Curve check points
It is possible to enter any number of check points. The control unit calculates the course of the curve, taking the stitch length into consideration. Check points do not necessarily have to be end points. A stitch length must be defined. The greater the number of check points entered, the more exact the course of the curve.



Curve end
This function changes a curve check point into a curve end point.



Circle

To enter a circle, three points are necessary. The first point is automatically the starting points. The two missing points still have to be entered. A stitch length must be defined.



Circular arc

For the circular arc the same applies as for the circle, whereby the last point defines the end of the circular arc.



Start sewing

This function is used to start sewing. All following sections are sewn until the thread trimming function is selected.

or



Thread trimming

The thread is cut. The start sewing function must have been activated previously.



Bartacks

These functions are used to call up the menu for entering start and end bartacks. The menu is used to enter the number of forward and reverse stitches as well as the bartack stitch length.



Sewing off

This function is used to stop the sewing head without thread trimming. The subsequent feed motions are carried out without a sewing function. To restart sewing, the start sewing function must be programmed.



Standard stitch length

This function is used to define the stitch length, which will be used predominantly in the program. During sewing the standard stitch will be displayed in the status bar and can be altered on the machine with the stitch alteration function, without changing into the programming mode.



Stitch length

A stitch length is defined for a certain seam sector.

This stitch length is not displayed in the status bar during sewing and can only be altered in the programming mode.



Stitch width

This function carries out a zig-zag motion with the jig drive on the base line. Here the stitch length indicates the feed motion along the base line from needle penetration to needle penetration and must be selected accordingly. The stitch width is carried out vertically to the base line. The position of the zig-zag to the base line must also be defined. If the stitch width function is to be switched off, the width must be entered as 0.0.



Other functions

This function is used for the selection of more functions, see Chapter 11.02.05 Other functions.



Insert block

This function is used to insert a marked block after the current position.

11.02.05 Other functions

- Switch on the machine.



- Call up the input mode.



- Call up the seam program input function.



- Call up "insert" functions.



- Call up other functions.



Description of the functions



Conclude input
This function is used to conclude the input, and the machines changes to the sewing mode.



Programmable outputs
The corresponding outputs (1 to 4) are activated with the menu.



Second vibrating presser level
A sector can be entered, in which the 2nd level of the vibrating presser is activated.



Secondary thread tension (depending on machine status)
This function is used to open or close the secondary thread tension.



Raise sewing head
With this function it is possible to select a sector in which the carriage is moved with raised sewing head.



Wait for input (inputs 1 to 4)
The processing of the program is stopped until the appropriate input (1 to 4) has reached the selected level.



Programmed stop
A stop is programmed in the program.
Processing is continued by calling up the "start" function.



Wait for time

The processing of the program is stopped until the programmed time has elapsed.



Speed

A speed is entered permanently in the program.



Reduced speed (depending on machine status)

This function is used to sew at a reduced speed or to switch off the reduced speed.



Adjustment parameters

This function is used to adjust the activation or deactivation of various functions. The number of stitches is entered for activating or deactivating the corresponding function sooner or later.



Esc

Conclude input without taking over the inputs.

11.03 An example for programming a seam

Below is an example describing how to enter a seam program.
A seam sketch serves as a model. This is put into the gauge frame and digitised with a needle.

A prerequisite for the use of the seam program is that it matches the jig.

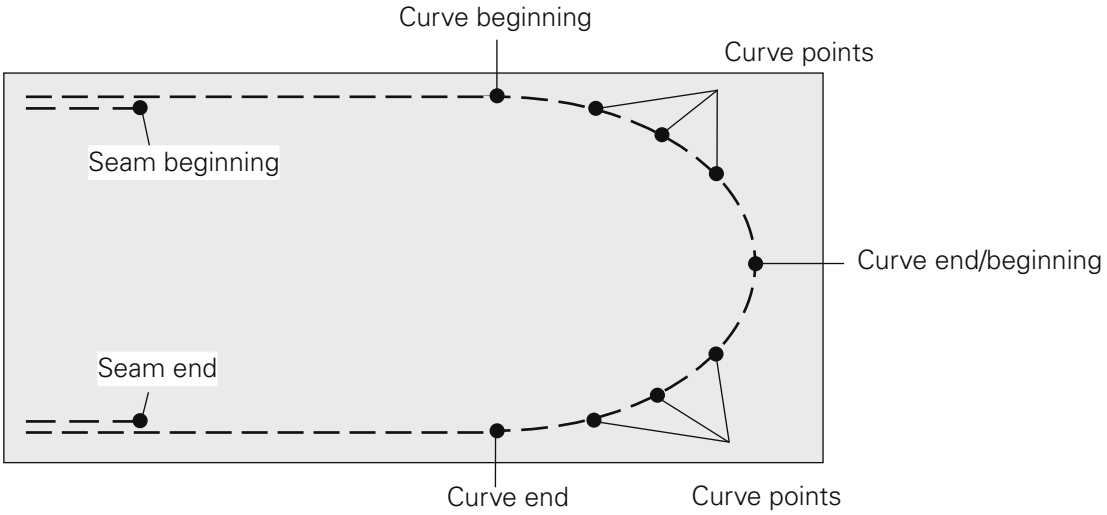

- Switch on the machine.



- Call up the input mode.



- Call up the seam program input function.
- If necessary, enter appropriate code number.



- Insert the jig.



- Close the jig indexing function.

Enter

- Confirm the operation.

7 8 9
4 5 6
1 2 3
+/- 0

- Enter desired program number (e.g. "5") to create a new seam program.

Enter

- Confirm program number selection

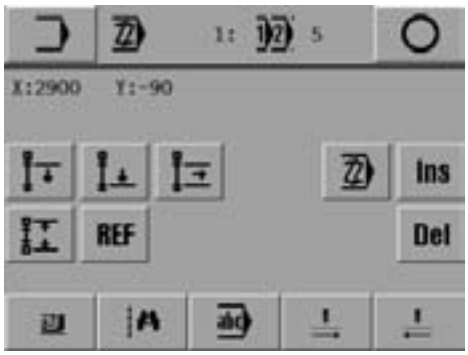

- Tact forwards.

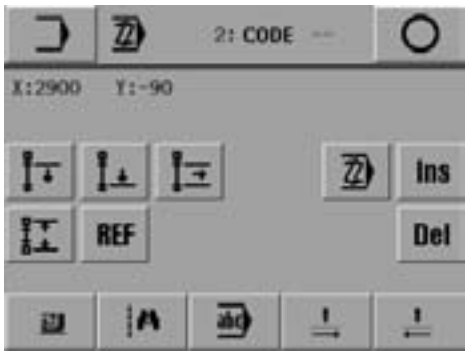

- Call up section editing function.

7 8 9
4 5 6
1 2 3
+/- 0

- Enter clamp code (e.g. "99").

Enter

- Confirm input.

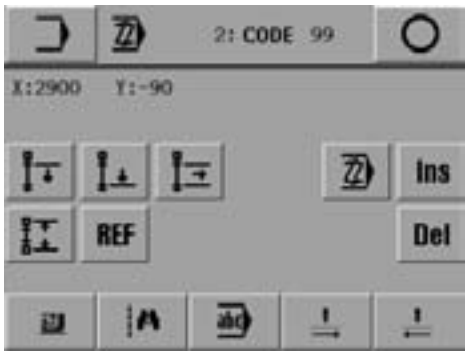

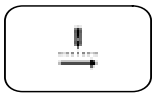

- Tact forwards. The jig moves to the starting position.

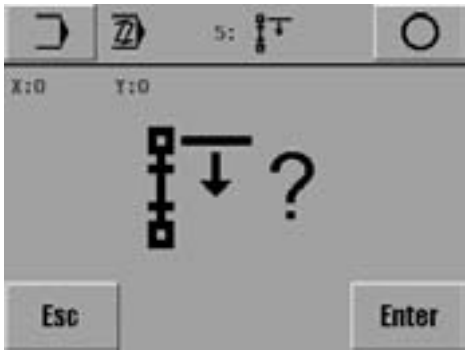

Esc

- Call up the "Esc" function, to change the starting point.

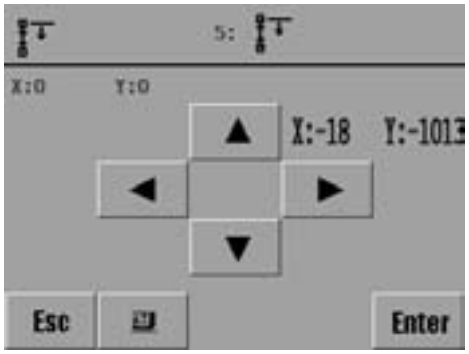

- Move to the starting point with the corresponding direction symbols, and check on the drawing with the needle.

Enter

- Save the setting.

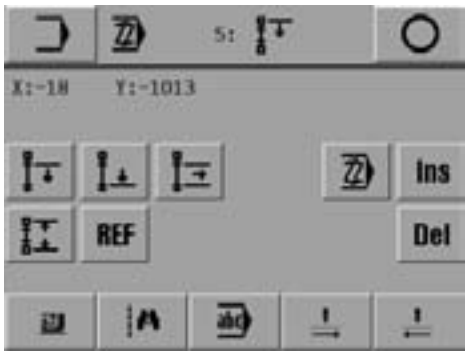

Ins

- Call up the "insert" function.

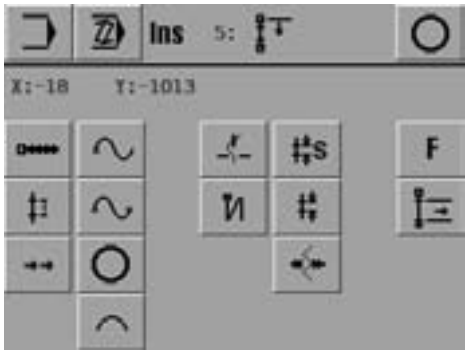



- Call up the "start sewing" function.

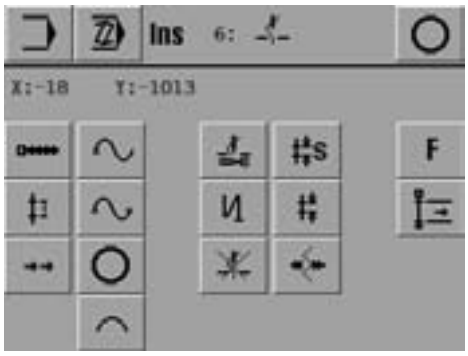



- Call up the "standard stitch length" function.

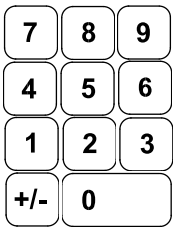

- Enter the value for the standard stitch length, e.g. 3.40 mm.



- Confirm input.

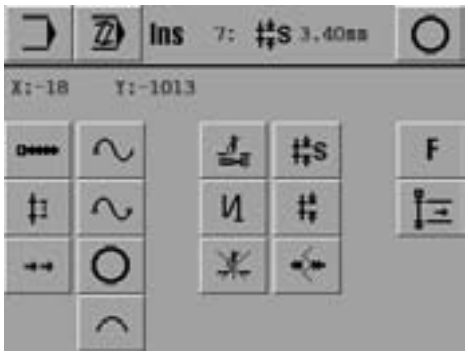



- Call up the "straight line" function to insert a straight line.
- Move to the end point of the straight line with the corresponding direction symbols.



- Save the setting.

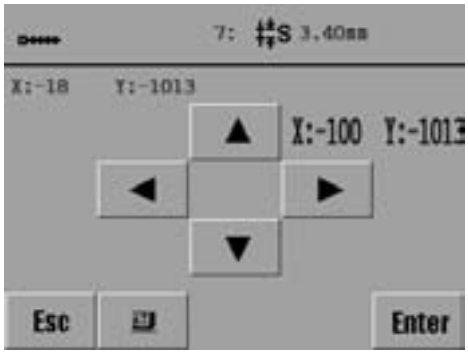

- Move to the next straight line end point with the corresponding direction symbols.



- Save the setting.

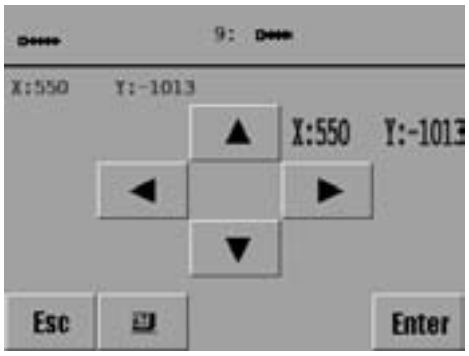

Esc
- Conclude straight line input.

- Call up the "curve point" function.

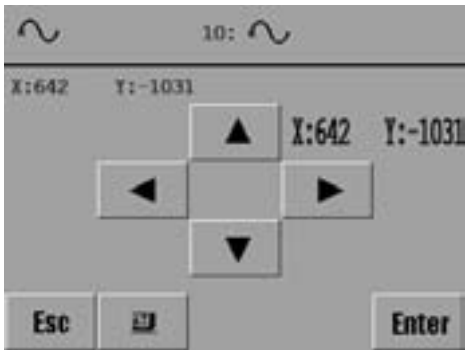

- Move to the first curve point with the corresponding direction symbols.

Enter
- Save the setting.
- Move to the second, third and fourth curve points with the corresponding direction symbols.

Enter
- Save each setting.

Esc
- Conclude curve points input.

- Call up "curve end" function (fourth Bezier curve is defined as curve end).

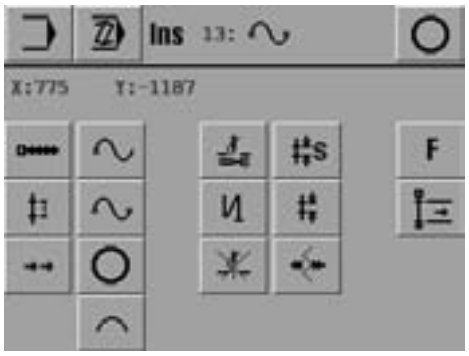

- Call up the "curve point" function.

- Move to the next curve point with the corresponding direction symbols.

Enter

- Save each setting.

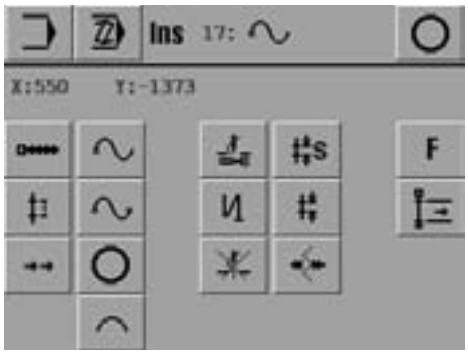

Esc

- Conclude curve points input.

- Call up "curve end" function.

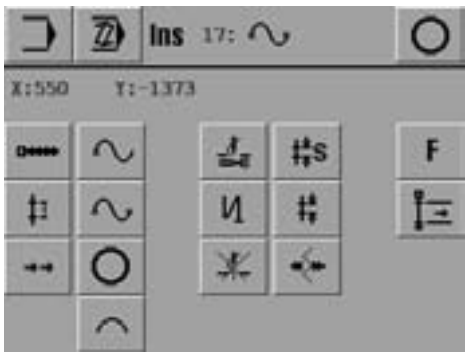

- Call up the "straight line" function to insert a straight line.
- Move to the end points of the straight line with the corresponding direction symbols.

Enter

- Save each setting.

Esc

- Conclude straight line input.

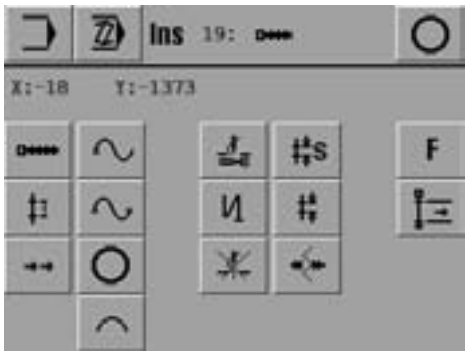

- Switch on the thread trimming function.

- Conclude the seam program input (function in status bar).

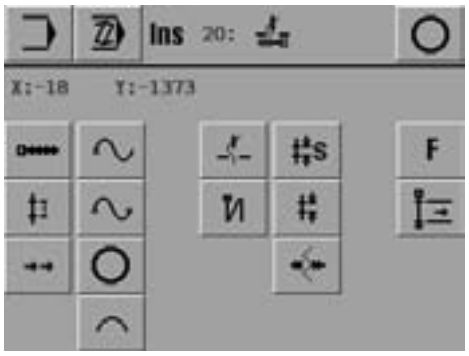

- Conclude the seam program input (function in status bar).



To be able to sew with the newly-created or edited seam program, the stitch generation must be carried out. Incomplete or incorrect programs also can be ended with the "Esc" function without stitch generation. In this case, when the seam program is called up in the sewing mode, an appropriate error message will appear.

Enter

- Carry out the stitch generation.

- Move to the basic position.

- After entering the appropriate program number, the created seam program can be selected and processed.

To begin with tact through a newly-created or corrected seam program on the machine, to make sure that it matches the jig!

11.04 Program management

The program management function is used to manage seam programs as well as configuration and machine data. Files can be selected from the machine memory or from a SD-Card and be copied or deleted.

- Switch on the machine.



- Call up the input mode.



- Call up the program management function.



Both data carriers with the corresponding files appear on the display:
- Machine memory ("C:\DATEN\") is currently selected
- SD-Card ( ) is currently inserted

The data carrier is selected by touching the appropriate box, and the content of the appropriate data carrier is also updated. The selected drive is shown as a invers symbol, the selected files are shown blue.

Seam programs are filed at a different level to that for the configuration and machine data, in order to avoid the configuration and machine data being processed by mistake.

Description of the functions



Input mode
This function is used to changed to the initial state of the input mode.



Update drives
This function is used to update (upload)the drives.



Conclude input
This function is used to conclude the input, and the machines changes to the sewing mode.



Data selection
With these functions the desired files are marked in the current drive. Individual files are selected with the arrow keys. In combination with the lock key (*) several files can be selected at one time with the arrow keys.



Copy
This function is used to copy the files selected from the current data carrier onto the second data carrier.



Delete
This function is used to delete the selected files.



MDAD/KONF
This function is used to call up the level for the configuration and machine data. The current settings and the machine configuration are stored in the files "MDAT3590" and "KKONF3590. BIN". In this way the machine data can be copied on to a CD-Card as a backup, or several machines with the same designation can be configured quickly by reading the machine data.



Format
This function carries out the formatting of the inserted SD card for the machine.



During formatting, the directory "P3590" is created. Should the directory already exist, then all data contained therein will be deleted!

11.05 Rights of access

The functions, which can be called up with the control panel, are classified by code numbers and can be protected from unauthorised access. For this purpose, the control unit differentiates between 3 user groups (user 1, 2 and 3), all of which can be assigned a corresponding PIN. If a function is selected, for which the user does not have an authorisation, the user is requested to enter a PIN. After the appropriate PIN has been entered, the selected function is carried out. In addition to the 3 user groups, the control unit also recognises the so-called "super user", who, equipped with a key-switch, has access to all functions and who is authorised to stipulate the rights of access.

- Enter the key-switch and switch on the machine.



- Call up the input mode.

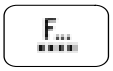

- Call up the menu for entering rights of access.

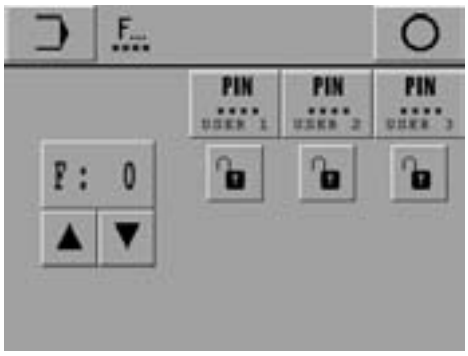

Description of the functions



Input mode
This function is used to change from the initial state to the input mode.



Conclude input
This function is used to conclude the input, and the machines changes to the sewing mode.



Entering the PIN
With this function an individual PIN for each user can be stipulated.

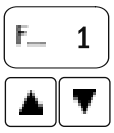

Function selection
These functions are used to select the code number for the function to be locked or released.



Locking/releasing
These functions are used to lock or release the function for the appropriate user.

Allocation of code numbers

Function	Symbol	Code number	Standard setting		
			User 1	User 2	User 3
Program number selection		0			
Enter stitch length		1			
Enter speed		2			
Input		3			
Create program		4			
Program management		5			
Parameter settings		6			
Parameter group 100 General settings	-	7*			
Parameter group 200 Seam parameters	-	8*			
Parameter group 300 Sewing motor positions	-	9*			
Parameter group 400 Times	-	10*			
Parameter group 500 Meters	-	11*			
Info		16			
Reset daily piece counter		17			
Reset bobbin thread stitch counter		18			
Reset operating hours meter		19			
Reset production hours meter		20			
Country settings		21			
Rights of access		22			
Moving stepping motors		25			
Testing jig drive	TEST	28			
Sewing motor functions		29			

Function	Symbol	Code number	Standard setting		
			User 1	User 2	User 3
RFID		31			
Service		23			
Carry out a cold start		24			
Load software		26			
Set zero points		30			

*These functions cannot be edited.

12 Care and maintenance

12.01 Maintenance intervals

Clean the entire machine	once a week
Clean the hook compartment	several times a day
Check the oil level of the sewing head lubrication unit	daily, before use
Lubricate clamp guides	every 2 months
Lubricate presser foot drive eccentric	every 2 months
Check air pressure	daily, before use
Clean air filter of air filter/lubricator	As required
Clean fan air filter	As required



During all cleaning work the machine must be disconnected from the power supply by switching off the main switch or pulling out the plug!
Danger of injury if the machine is started accidentally!

12.02 Cleaning the machine

The cleaning cycle required for the machine depends on following factors:

- Single or multi-shift operation
- Amount of dust resulting from the workpiece

It is therefore only possible to stipulate the best possible cleaning instructions for each individual case.



To avoid breakdowns, the following cleaning work is recommended for single shift operation:

- Clean hook compartment and needle area of sewing head several times daily.
- Clean the entire machine at least once a week.

To do so:

- Switch on the machine.
- Call up the threading aid function.



- The jig moves to its basic position, the hook compartment is opened and the sewing start function is blocked.
- Clean the machine.



- Start the sewing cycle

or



- Move the machine to its basic position.

12.03 Cleaning the hook

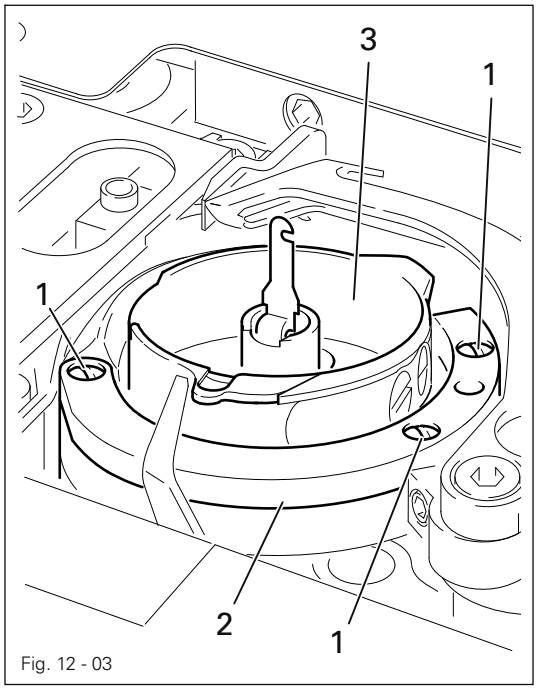

Fig. 12 - 03

- Remove screws 1.
- Remove hook gib 2.
- Turn the balance wheel until the edge of the bobbin case is located vertically below the bobbin opener.
- Remove bobbin case 3.
- Clean hook race.
- Insert bobbin case 3.
- Screw hook gib 2 back into place.

12.04 Clean fan air filter

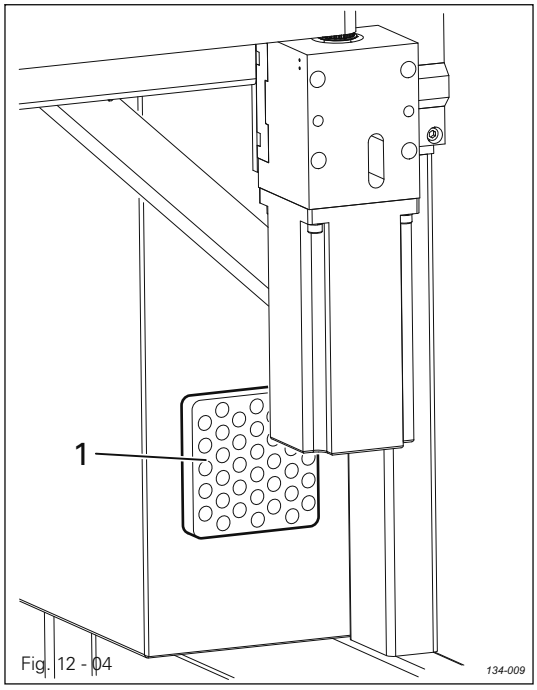

Fig. 12 - 04

- Remove cover 1.
- Remove the filter unit and blast clean with compressed air.
- Insert the clean filter unit and replace cover 1.

12.05 Checking/adjusting the air pressure

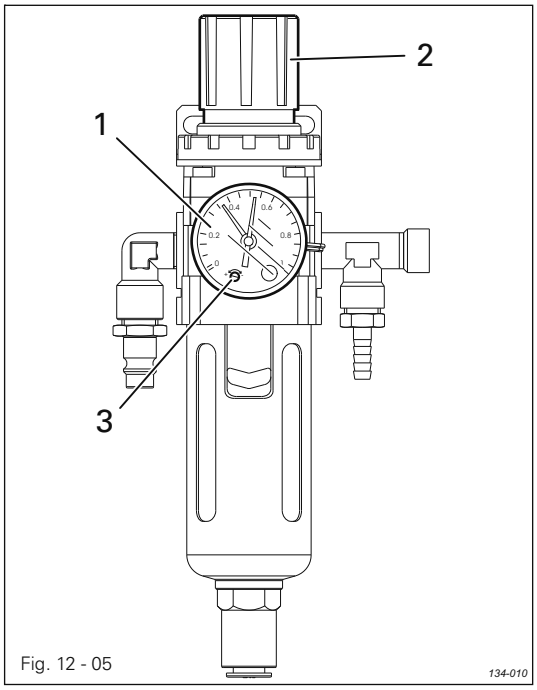

Fig. 12 - 05

- Before operating the machine, always check the air pressure on gauge1.
- Gauge **1** must show a pressure of 6 bar.
- If necessary adjust to this reading.
- To do so, pull knob **2** upwards and turn it so that the gauge shows a pressure of **6** bar.

Configuration of the pressure controller:

- Turn screw **3** until the green arrow points to **4.5** bar.
  The machine is automatically switched off if a pressure of < **4.5** bar is reached, and can be automatically reactivated, once pressure reaches a value > **5.0** bar.

12.06 Cleaning the air filter of the air-filter/lubricator



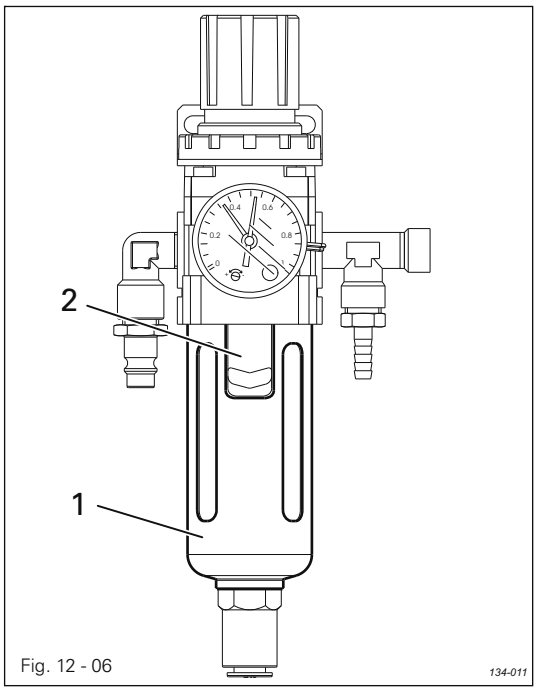

Fig. 12 - 06



Switch the machine off!
Disconnect the air hose at the air-filter/lubricator.

To drain water bowl **1**:

- Water bowl **1** drains itself automatically when the compressed-air hose is disconnected from the air-filter/lubricator.

Cleaning filter **2**:

- Unscrew water bowl **1**.
- Take out filter **2**.
- Clean filter **2** with compressed air or isopropyl alcohol (part No. **95-665 735-91**).
- Screw in filter **2** and screw on water bowl **1**.

12.07 Checking the oil level of the sewing head lubrication

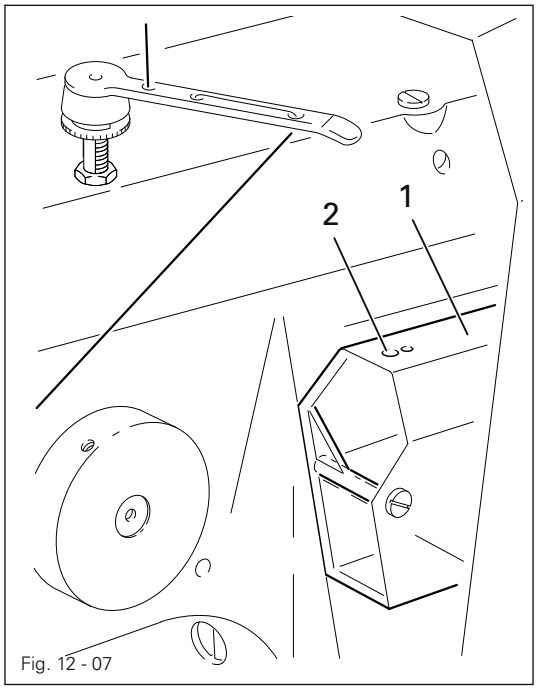

Fig. 12 - 07

- The oil level in drum **1** must be checked daily before use of the machine.
- The oil level must be between the upper and lower markings of drum **1**.
- When necessary, pour oil through hole **2**.

Only use oil with a mean viscosity of **22.0 mm²/s** at **40 °C** and a density of **0.865 g/cm³** at **15 °C**.

- Before the machine is first operated or whenever the machine has been at a standstill for a longer period of time, also add a few drops of oil to the hook race.

We recommend PFAFF sewing machine oil, part no. **280-1-120 144.**

12.08 Lubricate presser foot drive eccentric

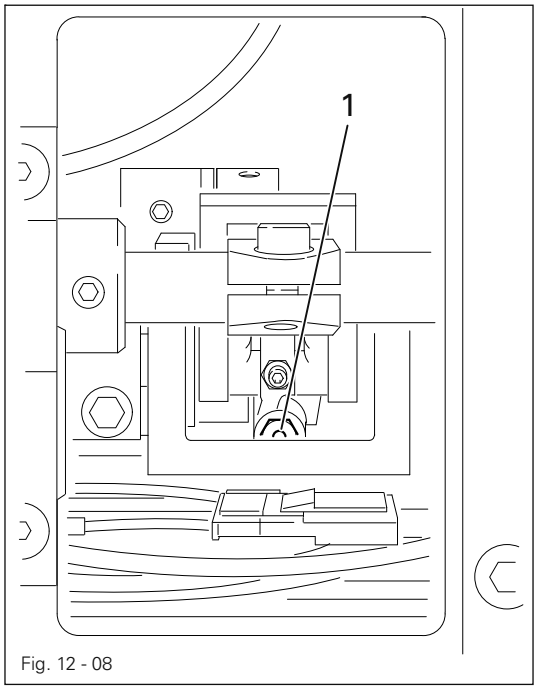

Fig. 12 - 08

Switch off the machine and take precautionary measures to ensure that it is not switched on again! Turn off compressed air!

Only use Isoflex Topas L**32** high-performance grease, part no. **280-1-120 210.**

- Unscrew cover at the rear of the sewing head.
- With lubricating nipple **1**, using a grease gun, lubricate the eccentric every **2** months for single shift operation, and once a month for double shift operation.
- Screw cover back on.

12.09 Lubricate jig guide

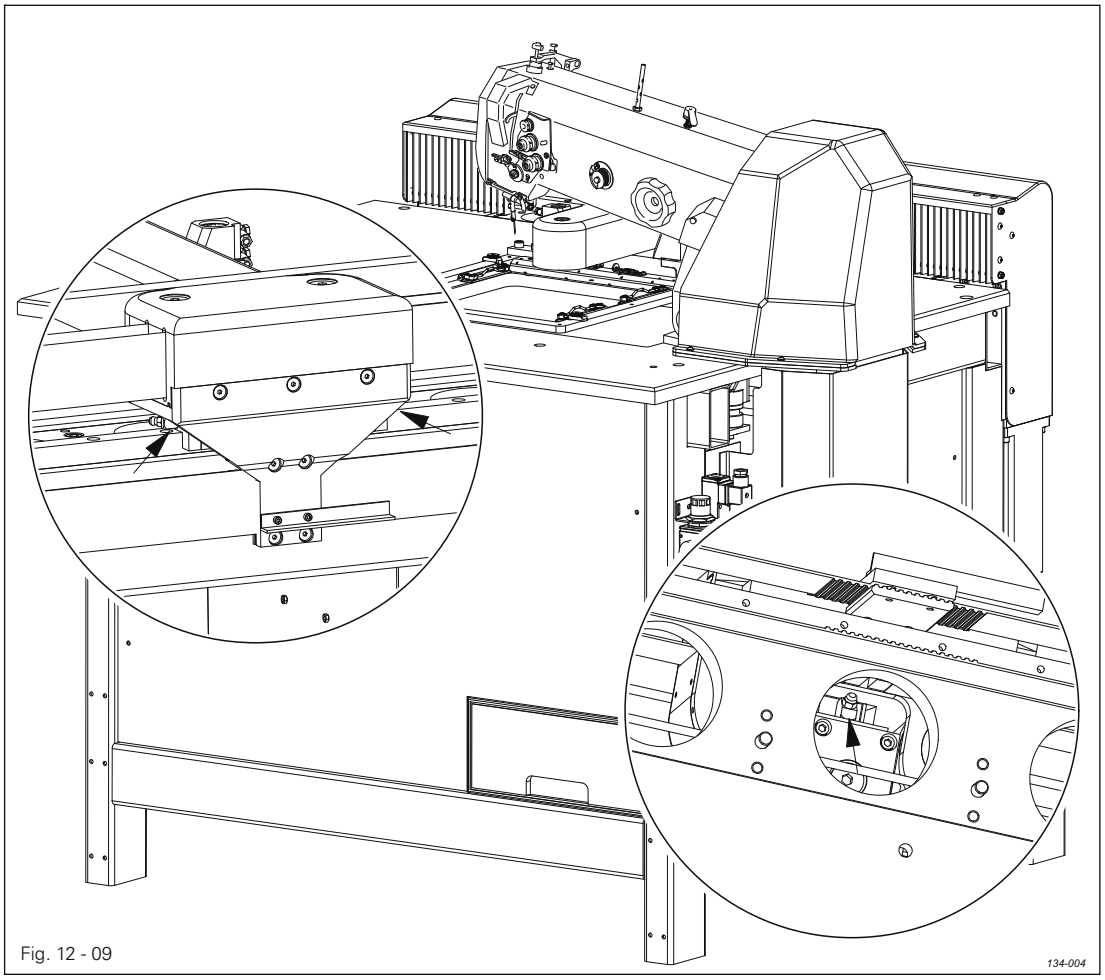

Fig. 12 - 09

Switch off the machine and take measures to prevent it being switched on again!

Only use Isoflex **Topas L32** high-performance grease, part no. **280-1-120 210**.

- Unscrew the cover of the jig drive.
- With the appropriate lubricating nipple, using a grease gun, lubricate the guide units every **2** months for single shift operation, and once a month for double shift operation.
- Screw cover back on.

13 Adjustment



Before beginning any adjustment work, take note of the safety regulations found in chapter **1 Safety of this instruction manual**!

13.01 Notes on adjustment

All following adjustments are based on a fully assembled machine and may only be carried out by expert staff trained for this purpose. Machine covers, which have to be removed and replaced to carry out checks and adjustments, are not mentioned in the text. The order of the following chapters corresponds to the most logical work sequence for machines which have to be completely adjusted. If only specific individual work steps are carried out, both the preceding and following chapters must be observed. Screws, nuts indicated in brackets ( ) are fastenings for machine parts, which must be loosened before adjustment and tightened again afterwards.



Unless stated otherwise, during all adjustment work the machine must be disconnected from the electric and pneumatic power supply!
Danger of injury if the machine is started accidentally!

13.02 Tools, gauges and other accessories

- Screwdrivers with blade width from **2** to **10 mm**
- Wrenches (spanners) with jaw width from **6** to **22 mm**
- Allan keys from **1.5** to **6 mm**
- **1** universal screwdriver with interchangeable blades
- **1** metal ruler
- **1** adjustment pin (zero point adjustment)
- 1 adjustment gauge (for adjustments to sewing head), part no. **61-775 913-15**
- 1 adjustment gauge (for adjustments to sewing head), part no. **61-778 162-15**
- **1** adjustment gauge (for adjustments to feed)
- **1** needle rise gauge, part no. **61-111 600-01**
- **1** adjustable clamp, part no. **08-880 137 00**
- **1** adjustment sleeve (foot bar adjustment), part no. **95 778-090-15**
- Sewing thread and test material
- Needles

13.03 Abbreviations

TDC = top dead center
BDC = bottom dead center

13.04 Tilting the sewing head



Turn off the compressed air!
Switch off the machine and take measures to prevent it being switched on again!

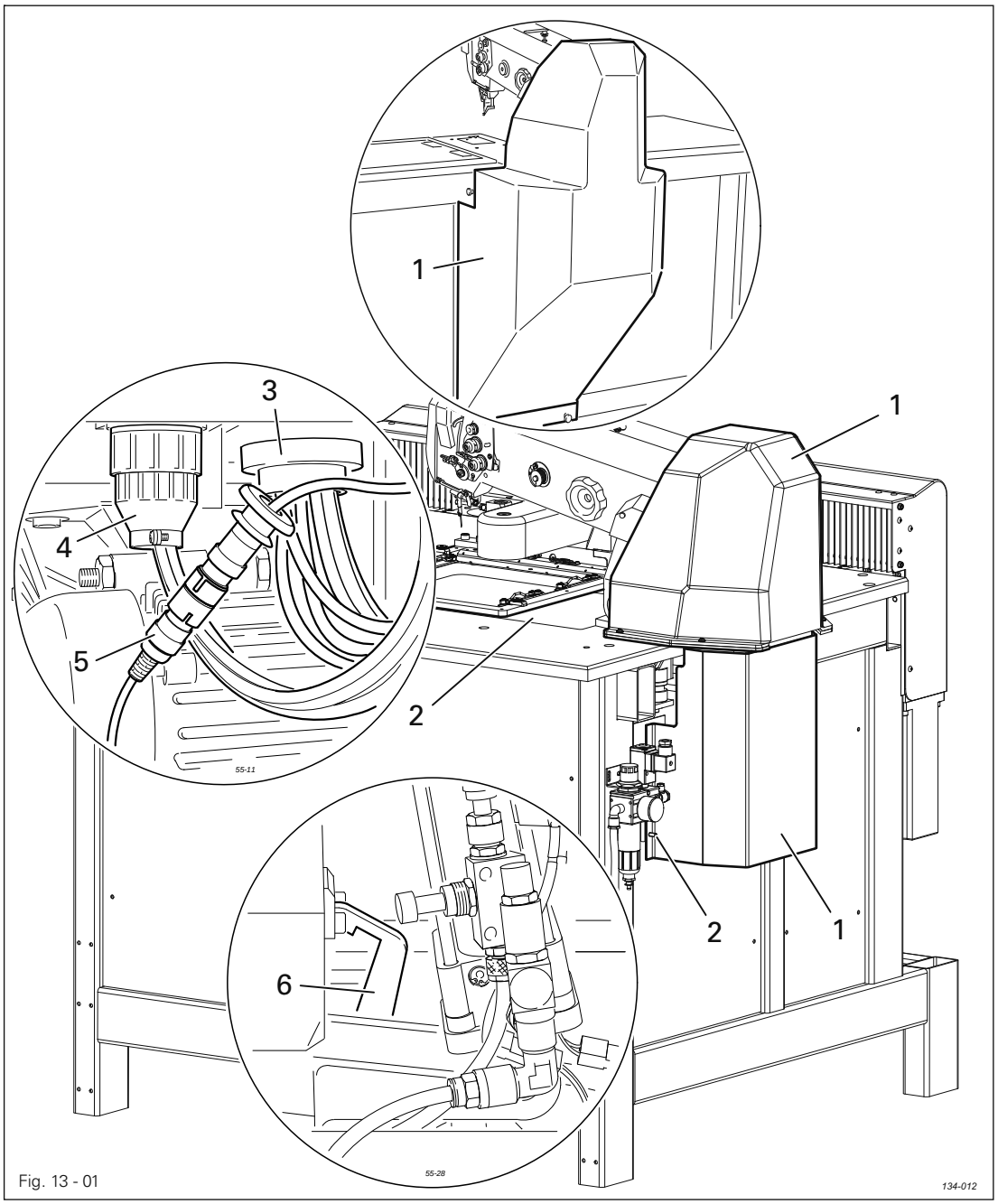

Fig. 13 - 01

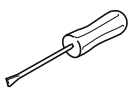

- To tilt the sewing head remove protective covers **1**.
- Detach cover plate **2**.
- Disconnect the pneumatic power supply **3**, electrical power supply **4** and plug **5**.
- Unhinge lock **6** and tilt down sewing head.
- Remove V-belt from pulley on the motor.
- Remove ground cable of machine sewing head.
- Tip back sewing head.
- To replace the sewing head, carry out the above procedure in the reverse order.

13.05 Adjusting the sewing head

13.05.01 Spacing between sewing head and bed plate

Requirement
When the sewing head is lowered, the distance between the lower edge of the shaft **1** and the bed plate should be **132.8 mm**.

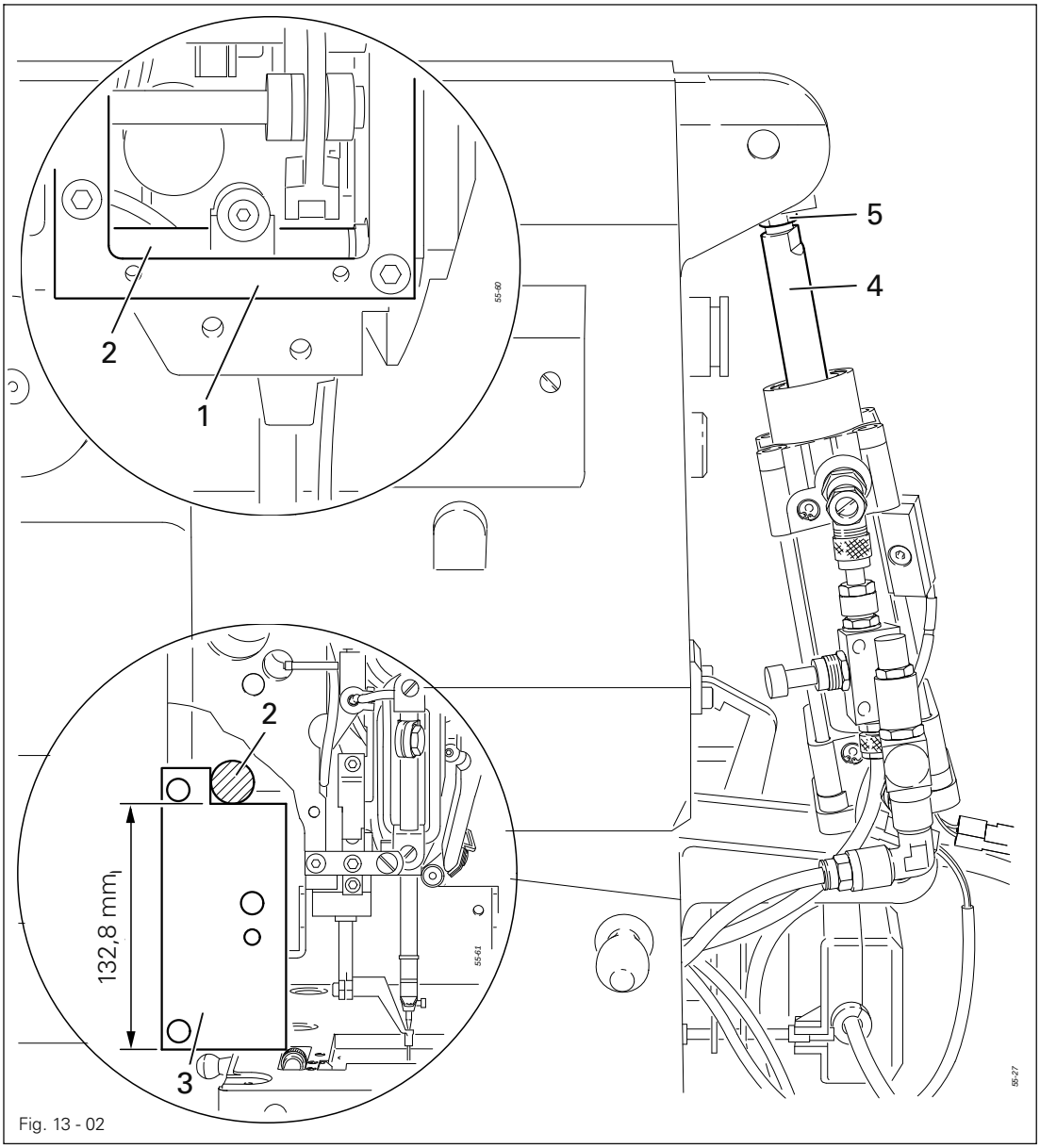

Fig. 13 - 02

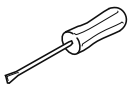

- Remove hook compartment cover.
- Unscrew frame **1**.
- Check distance between shaft **2** and bed plate using adjustment gauge **3** (part no. **61-775 913-15**).
- If necessary adjust plunger **4** (nut **5**) according to the **requirement**.
- Reattach frame **1**.

13.05.02 Position of the sewing head in relation to the bed plate

Requirement
When the sewing head is lowered, the presser bar **4** with adjustment sleeve **3** should slide exactly into the appropriate hole of adjustment gauge **1**.

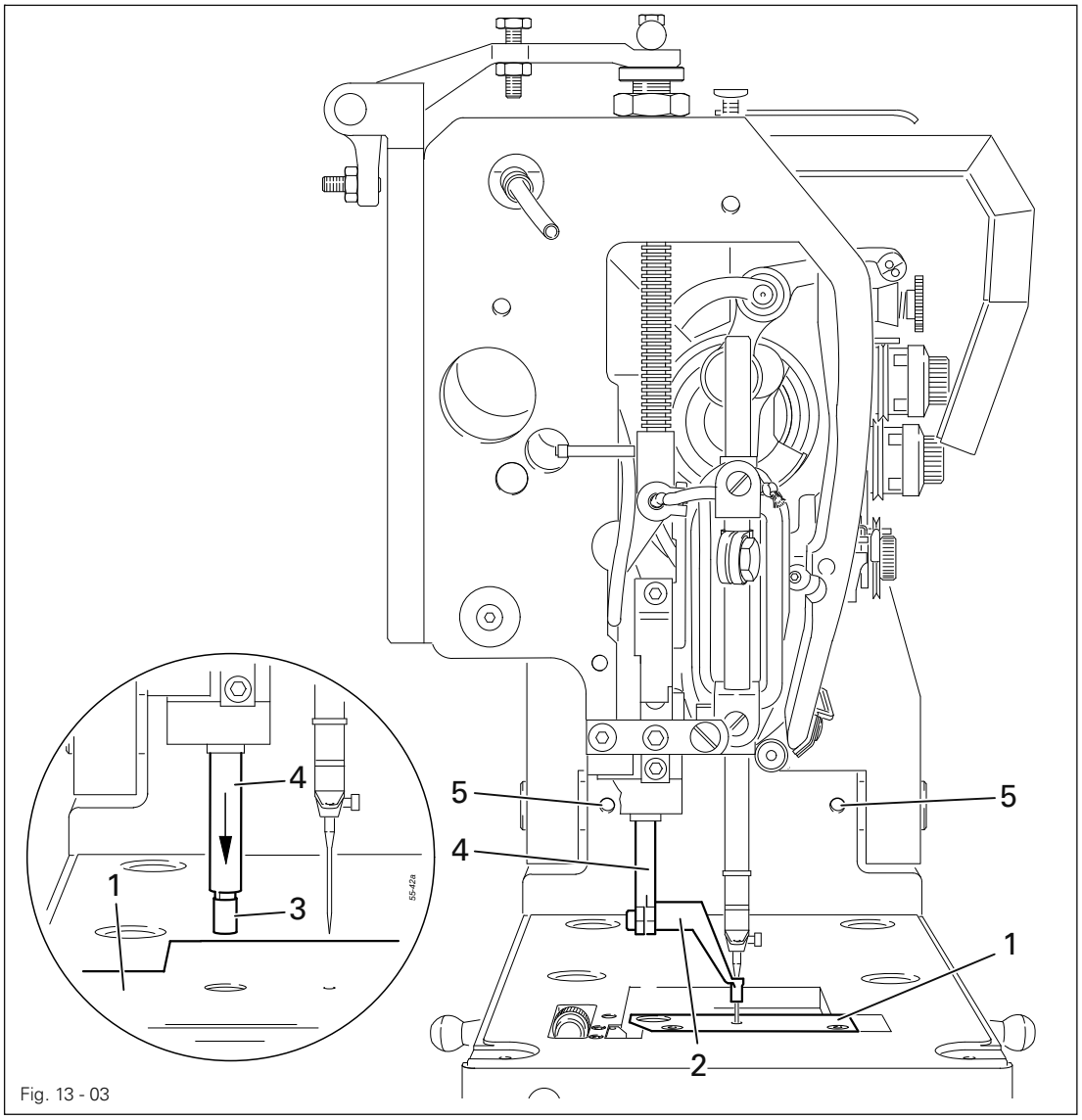

Fig. 13 - 03

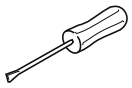

- Unscrew needle plate and counter presser.
- Screw on adjustment gauge **1** (**part no. 95-778 162-15**).
- Remove presser foot **2**.
- Fit adjustment sleeve **3** to presser bar **4**.
- Check **requirement** by turning the balance wheel, and if necessary adjust sewing head (screws **5**) according to the **requirement**.



The adjustment gauge **1** remains in place for further adjustments.
The exact setting of the presser bar **4** is described in Chapter **13.05.21 Presser foot height.**

13.05.03 Upper and lower toothed belt guards

Requirement
The upper and lower toothed belt guards must be positioned as close as possible over the toothed belt sprockets without touching them.

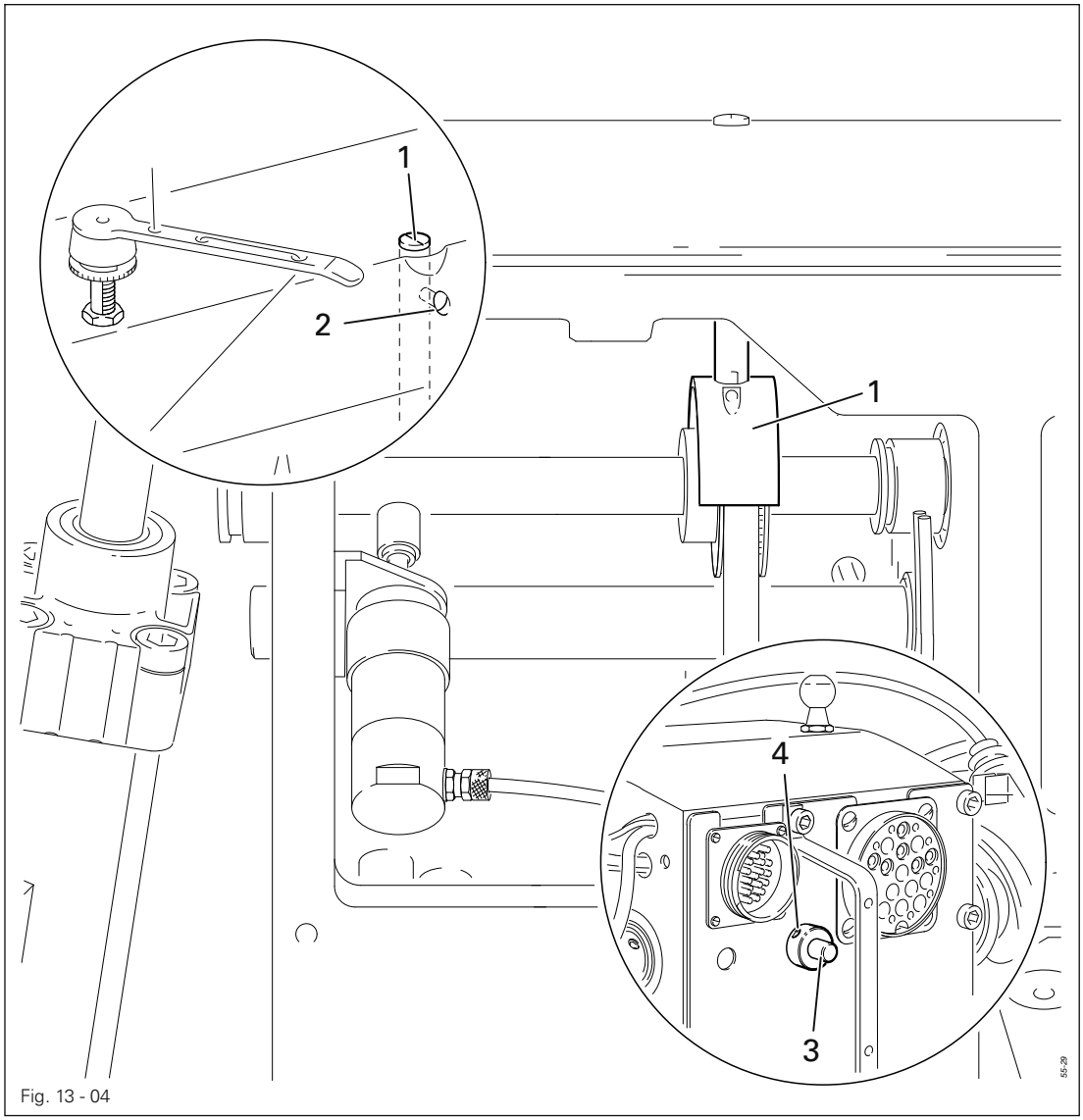

Fig. 13 - 04

- Move the upper **1** (screw **2**) and lower toothed belt guards **3** (screws **4**) at the underside of the sewing head according to the **requirement**.

Carry out the adjustment carefully!
Otherwise, when the sewing head is raised up, the toothed belt could disengage!

13.05.04 Counterweight

Requirement
In needle bar position BDC the largest eccentricity of the counterweight **1** must be at the top.

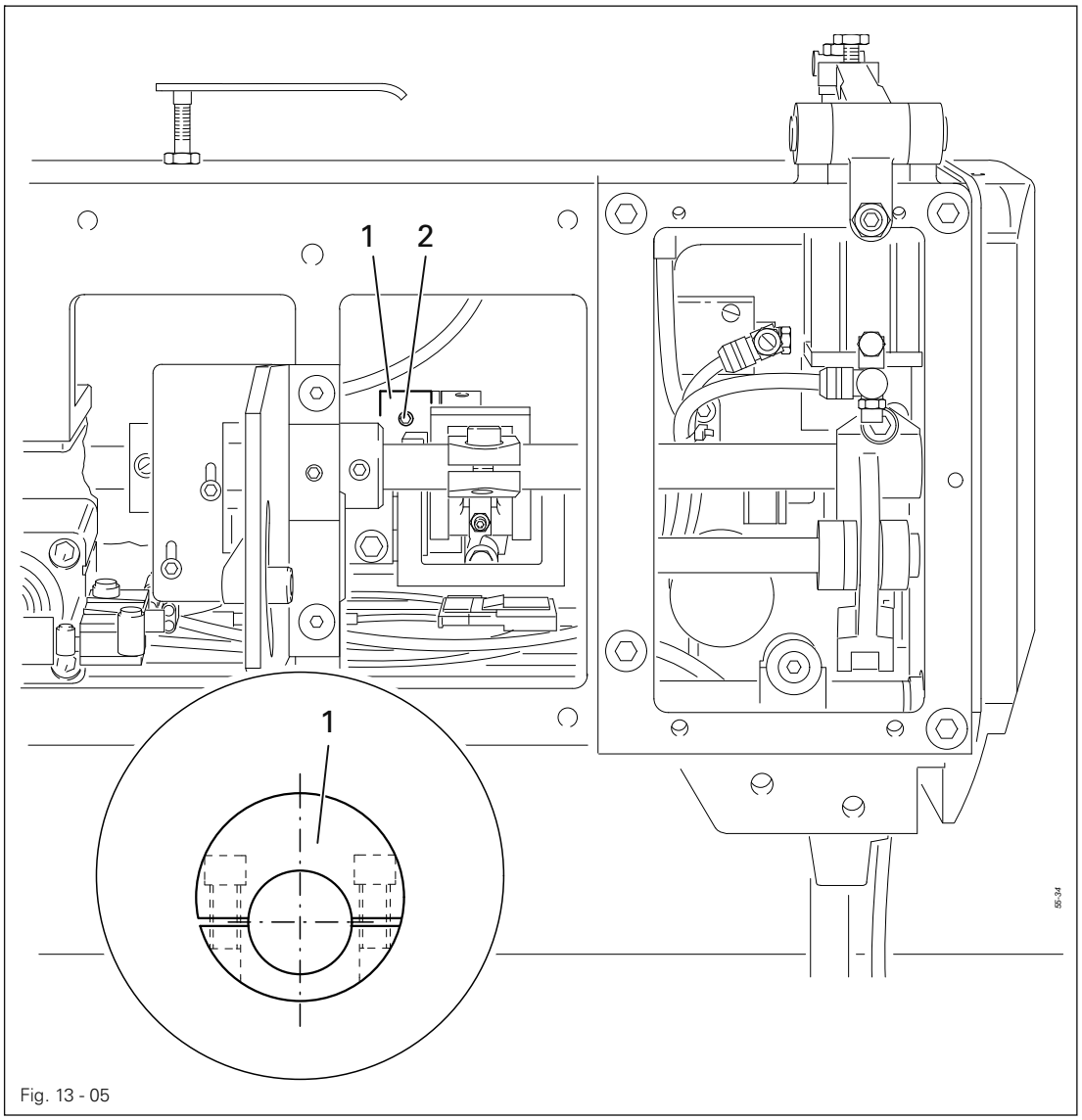

Fig. 13 - 05

- Move needle bar to BDC.
- Turn counterweight **1** (screws **2**) according to the **requirement**.

13.05.05 Preadjusting the needle height

Requirement
At needle bar position TDC, the distance between the needle point and the adjustment gauge must be approx. **22 mm**.

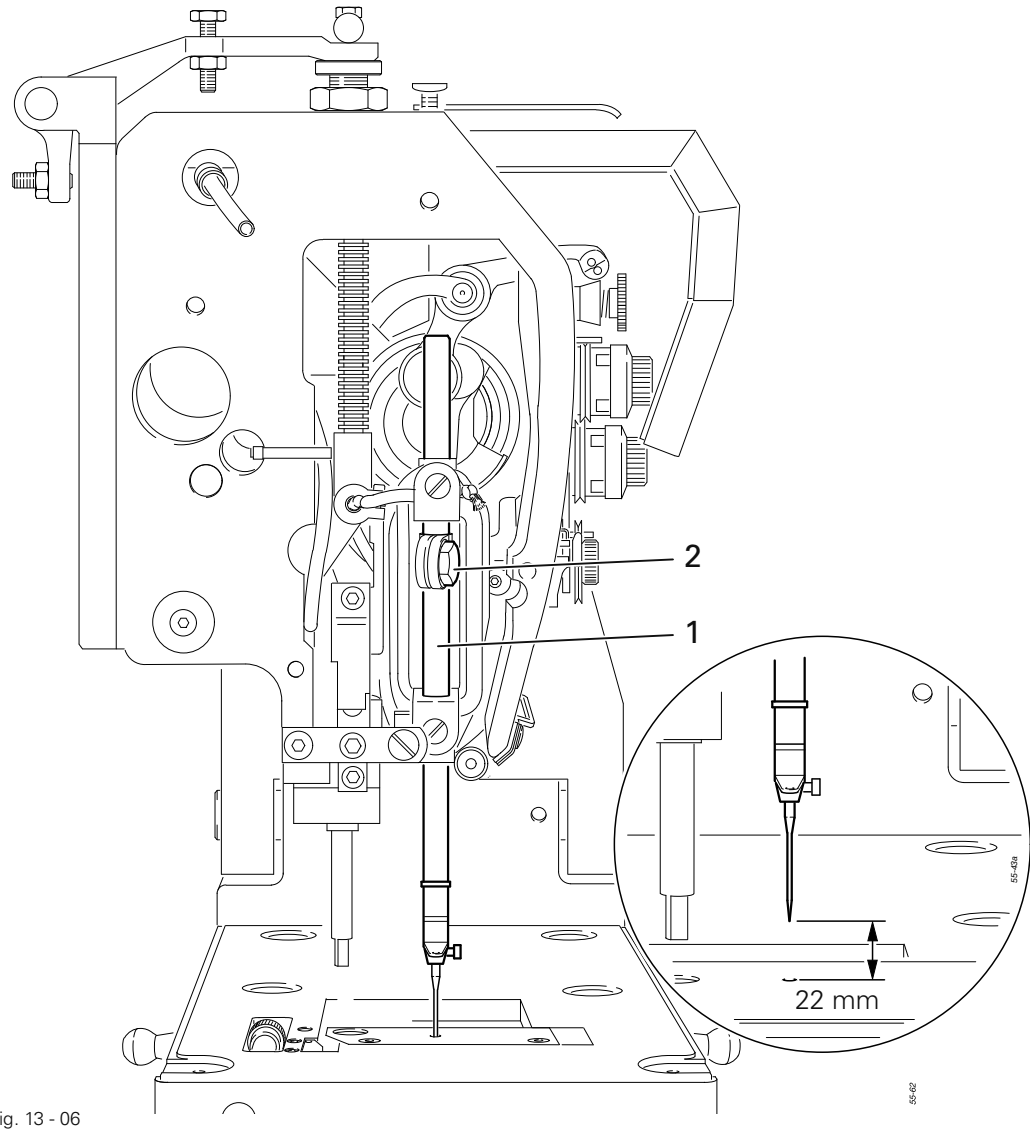

Fig. 13 - 06

- Move needle bar **1** (screws **2**) without twisting it according to the **requirement**.

13.05.06 Centering the needle in the needle hole

Requirement
The adjustment pin **1** must fit precisely into the corresponding adjustment hole of the adjustment gauge **6**.

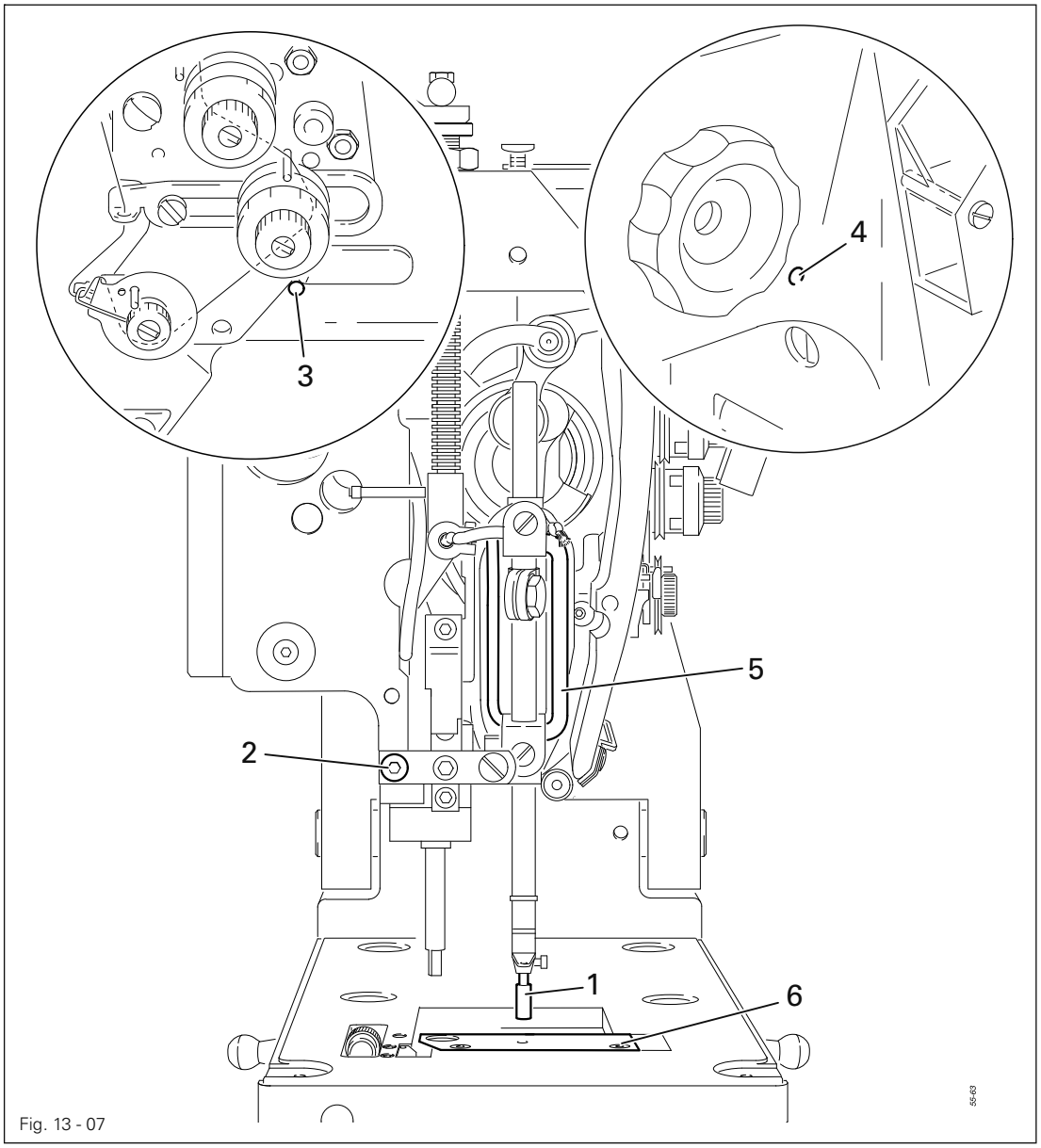

Fig. 13 - 07

- Insert adjustment pin **1** into the needle bar and screw tight.
- Loosen screws **2**, **3** and **4**.
- Move needle bar frame **5** according to the **requirement**.
- Tighten screws **2**, **3** and **4**.
- Unscrew adjustment gauge **6** and adjustment pin **1**.

13.05.07 Needle rise, needle height, hook clearance and needle guard

Requirement

With the needle bar in position **2.2 mm** after b.d.c. (needle rise)

1. The top edge of the needle eye should be **1.0 mm** below the tip of the hook,
2. The hook tip should be **0.05 – 0.1 mm** from the needle and point at needle centre and
3. Needle guard **5** should touch the needle lightly.

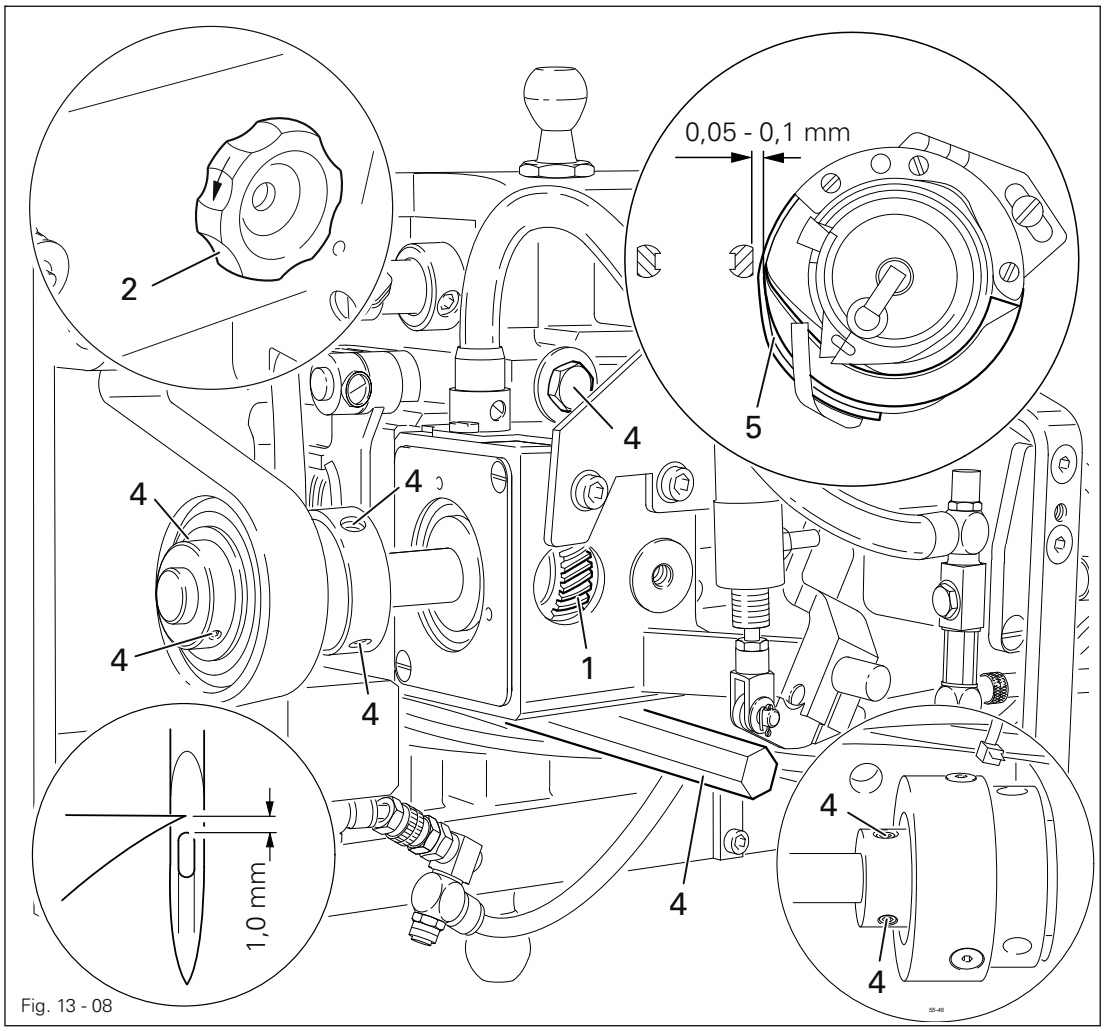

Fig. 13 - 08

Needle rise

- Loosen screws of the bevel gear **1**.
- Bring needle bar to b.d.c.
- In this position, push the **2.2 mm** thick feeler gauge of the needle rise gauge directly under the needle bar bearing.
- Position adjustable clamp (part no. **08-880 137 00**) on feeler gauge and screw it to the needle bar.
- Remove feeler gauge and turn balance wheel **2** in the direction of the arrow, until the adjustable clamp is in position.
- Point hook tip towards needle centre and tighten the screws of bevel gear **1**, taking the backlash into consideration.

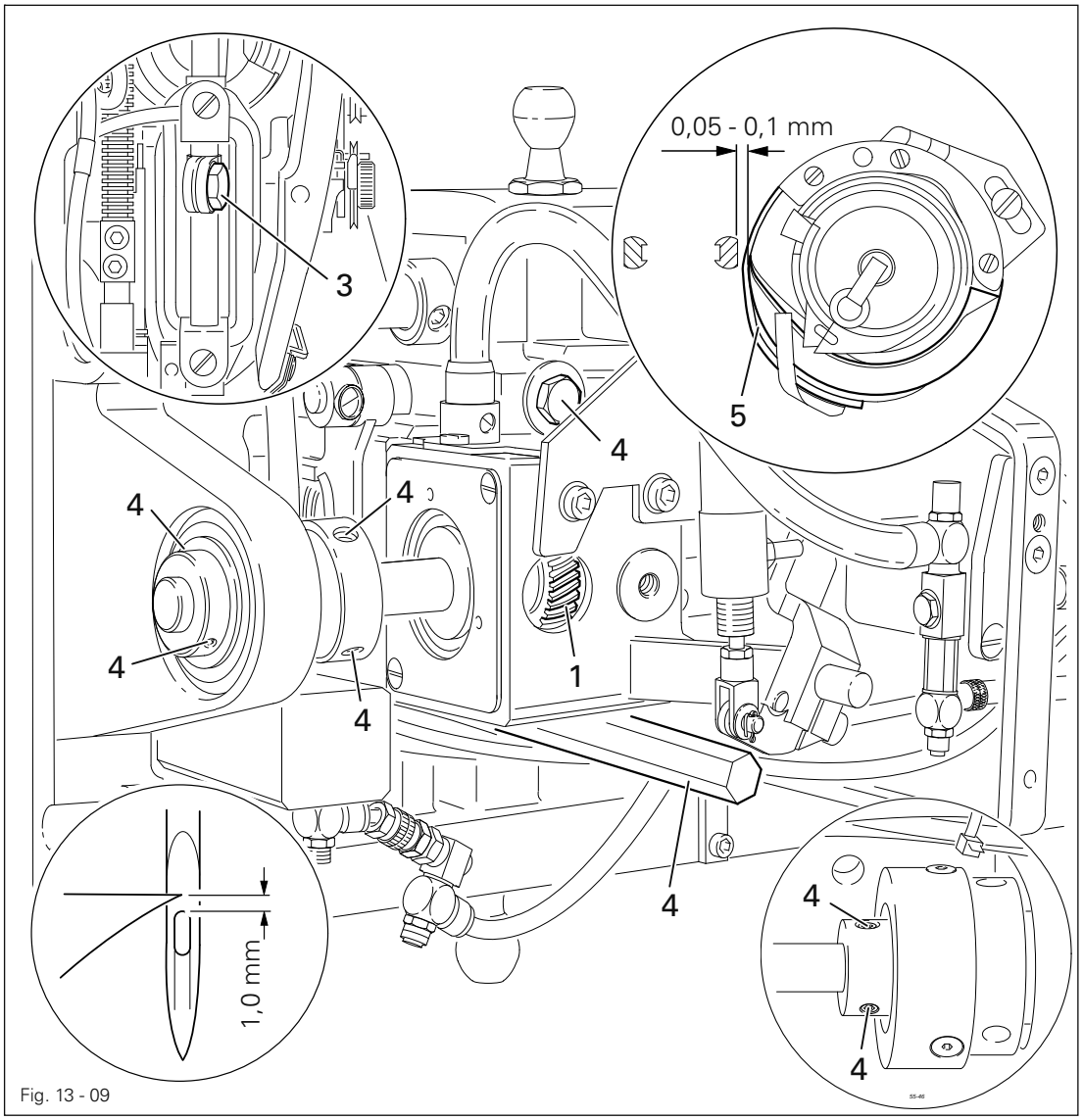

Fig. 13 - 09

Needle height

- Without twisting it adjust needle bar (screw **3**) according to **requirement 1**.

Hook-to-needle clearance

- Adjust hook bearing (screws **4**) according to **requirement 2**, taking care that the needle is not deflected by needle guard **5**.
- Check the movement of the feed lifting eccentric.

Needle guard

- By turning balance wheel **2**, bring the needle bar into needle rise position.
- Align needle guard **5** according to **requirement 3**.

13.05.08 Bobbin-case opener stroke

Requirement
When the bobbin-case opener is at its foremost position, the catch **3** of the bobbin-case should be far enough away from the edge of the needle plate opening **4** to allow the thread to pass through without difficulty.

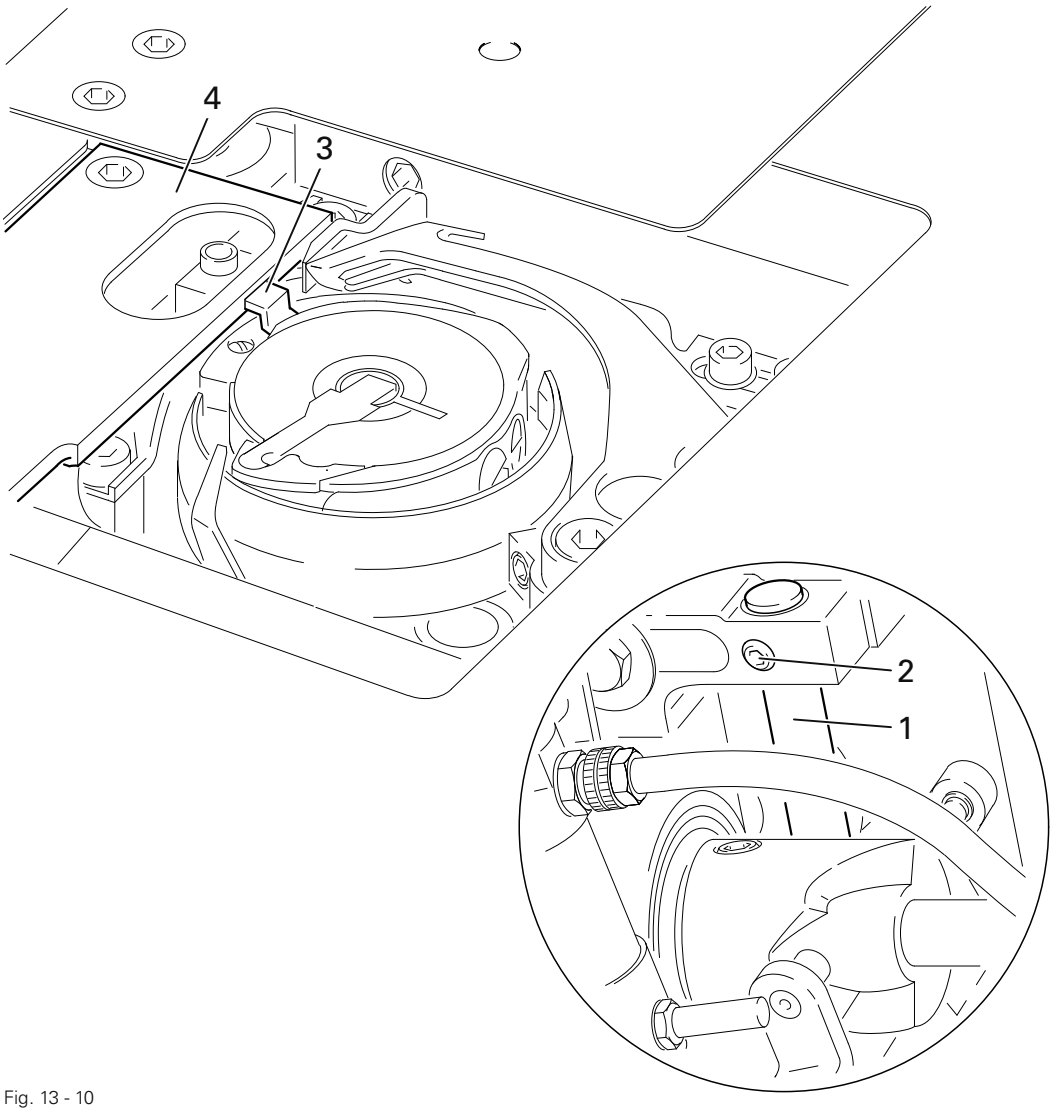

Fig. 13 - 10

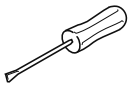

- Adjust shaft **1** (screw **2**) according to the **requirement**.

13.05.09 Counter presser lifting stroke

Requirement
With the needle bar at b.d.c., the counter presser **3** should be at the top of its stroke.

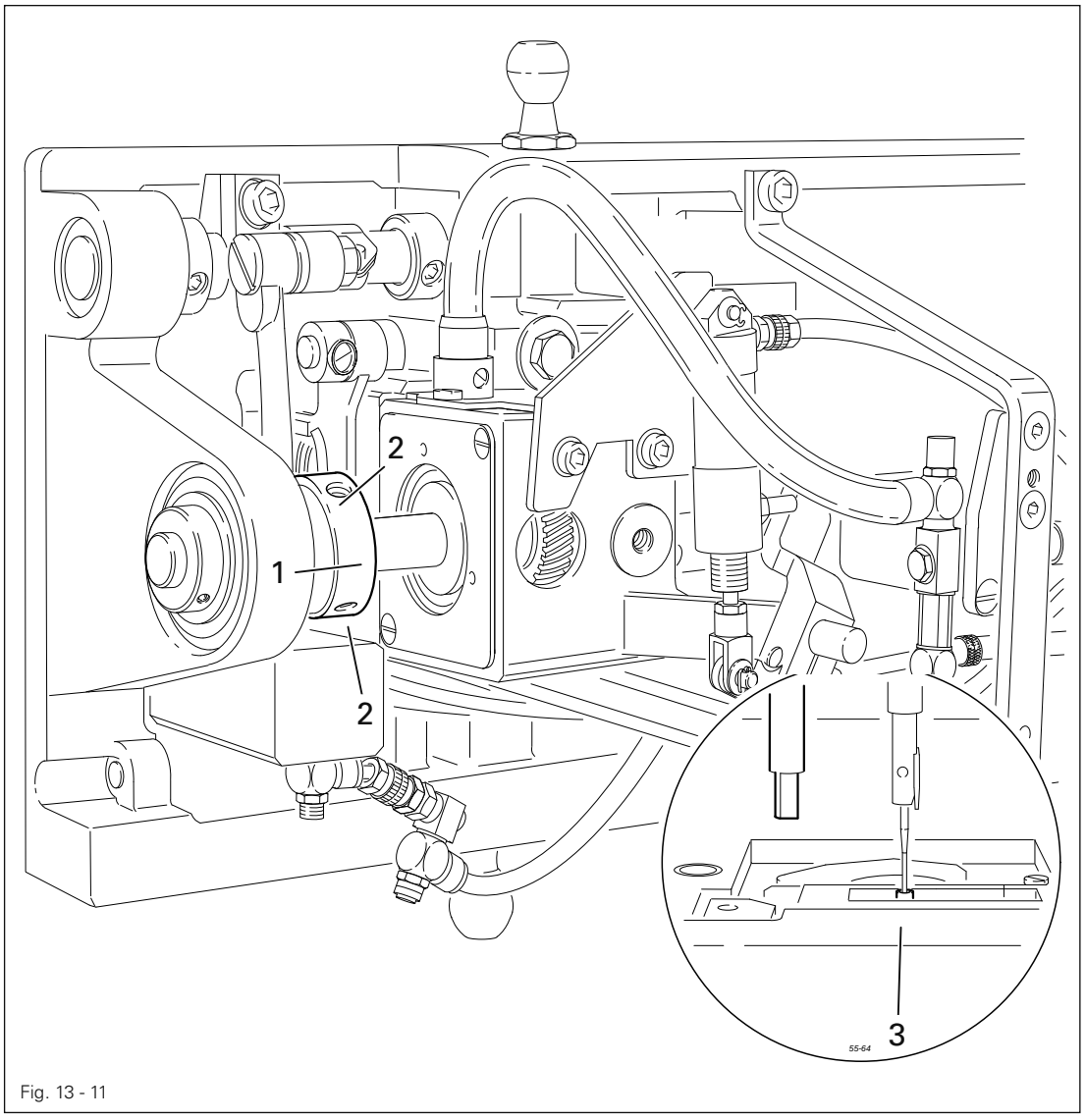

Fig. 13 - 11

- Bring the needle bar to b.d.c.
- Adjust eccentric **1** (screws **2**) according to the **requirement**.

13.05.10 Counter presser height

Requirement

Long counter presser (Order No. 91-059 979-04)

1. When the needle bar is at b.d.c., the top edge of the long counter presser **6** should be **2 mm** above the closed hook compartment cover **1**.
   When the needle bar is at t.d.c., the top edge of the counter presser **6** must not be above the hook compartment cover **1**.

Short counter presser (Order No. 91-059 878-04)

2. When the needle bar is at b.d.c., the short counter presser **7** should be flush with the top edge of the hook compartment cover **1**.

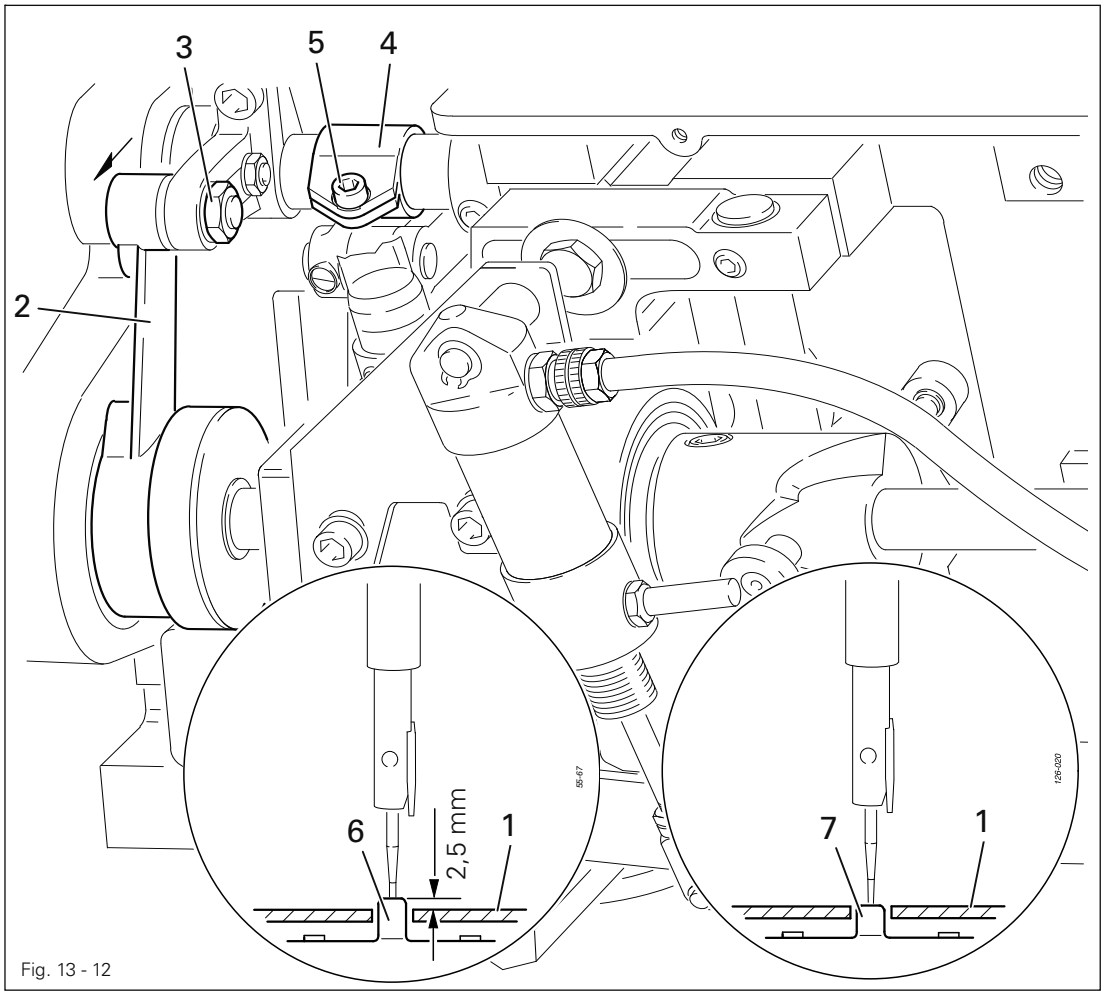

Fig. 13 - 12

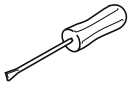

- Fit hook compartment cover **1**.
- When using the long counter presser (Order No. **91-059 979-04**), move lever **2** (nut **3**) up as far as possible in the opposite direction shown by the arrow.
- Adjust holder **4** (screw **5**), so that when the needle bar is at t.d.c., the counter presser **6** is flush with the top edge of the hook compartment cover **3** (**Requirement 1**).
- When using the short counter presser (Order No. **91-059 878-04**), move lever **2** (nut **3**) down as far as possible in the direction shown by the arrow (**Requirement** 2).

13.05.11 Counter presser position

Requirement
The needle should enter the needle hole in the centre of the counter presser **1**.

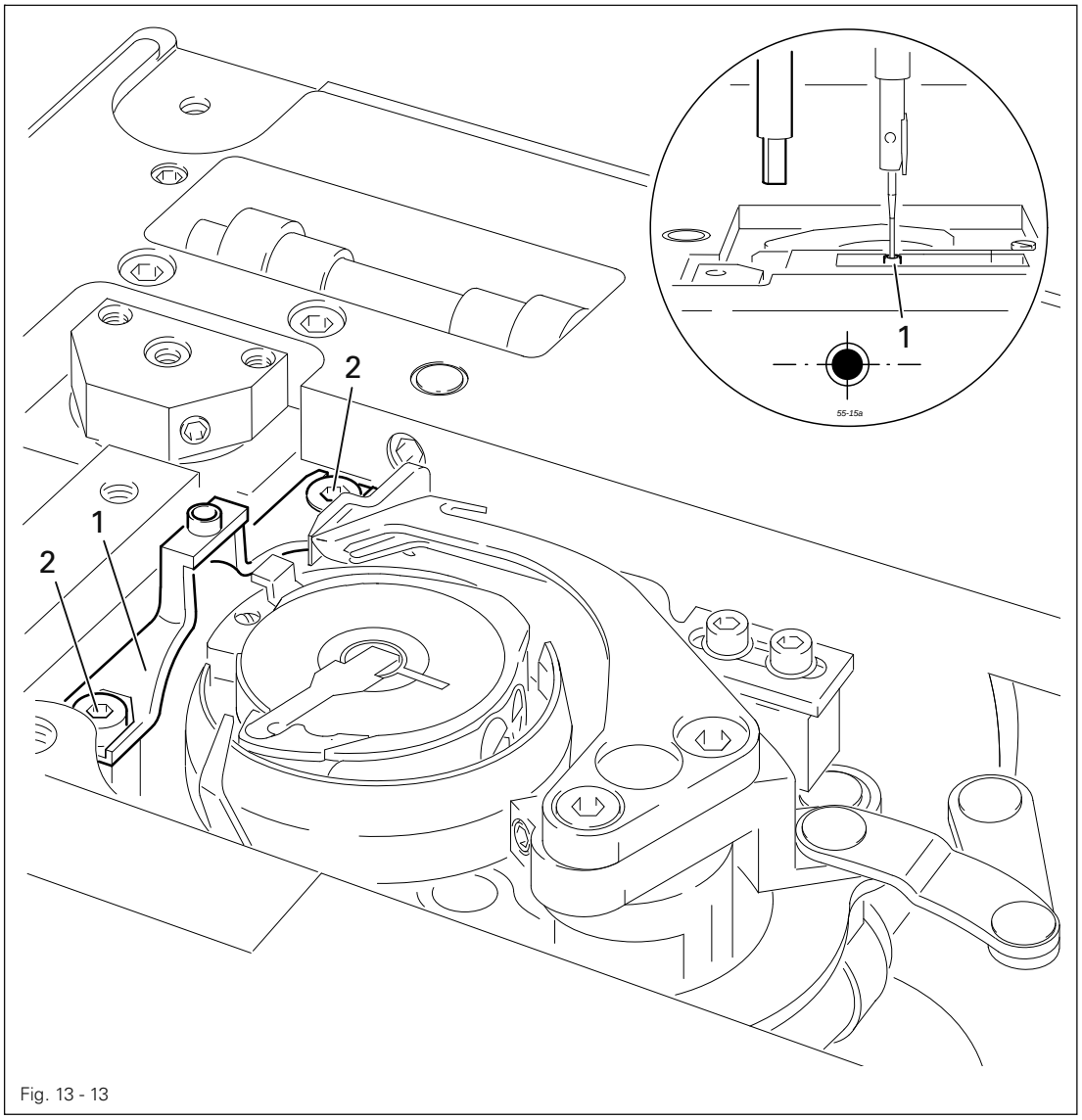

Fig. 13 - 13

- Adjust counter presser **1** (screws **2**) according to the **requirement**.

13.05.12 Resting position of the roller lever / radial position of the control cam

Requirement

1. When the plunger **1** is retracted, there must be a distance of **0.1 mm** between the outer edge of the control cam **6** and the roller of the roller lever **5**.
2. When the thread trimmer is switched on beforehand, the control cam **6** must have just brought the roller lever **5**, in TDC take-up lever, to its resting position.

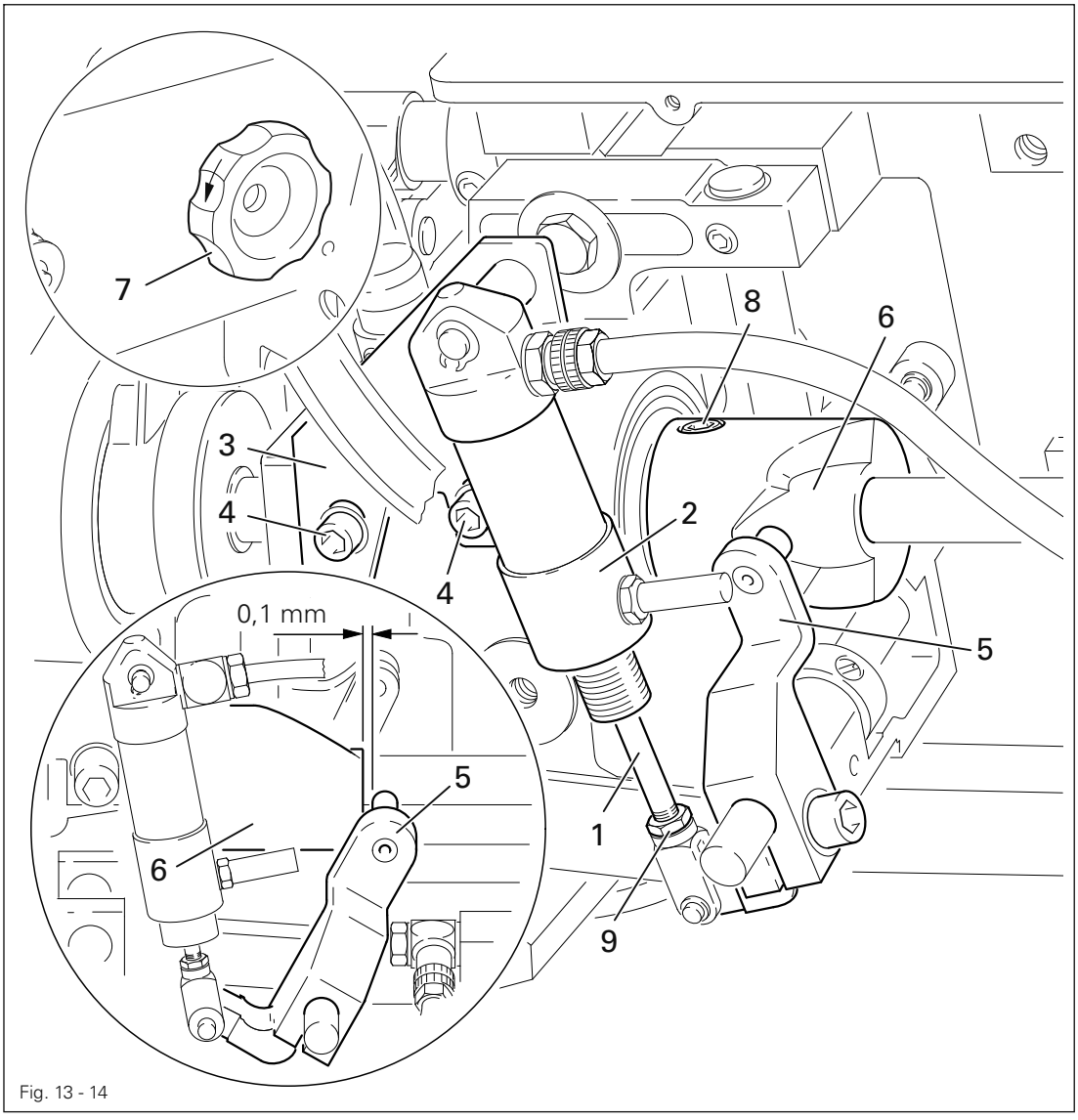

Fig. 13 - 14

- Retract the plunger **1** in cylinder **2** until it stops.
- Move the cylinder carrier **3** (screws **4**) according to **requirement 1**.
- Bring the take-up lever to BDC and push the roller lever **5** into the control cam **6** by hand.
- By turning the handwheel **7** in the direction of the arrow, bring the take-up lever to TDC and check **requirement 2**.
- If required, turn the control cam **6** (screws **8**) according to **requirement 2**.

On plunger **1**, the thread should be approx. **1 mm** above the lock nut **9**.

13.05.13 Thread catcher height

Requirement
The lower edge of the thread catcher **3** must be positioned at a distance of **0.8 mm** above the bobbin case **4**.

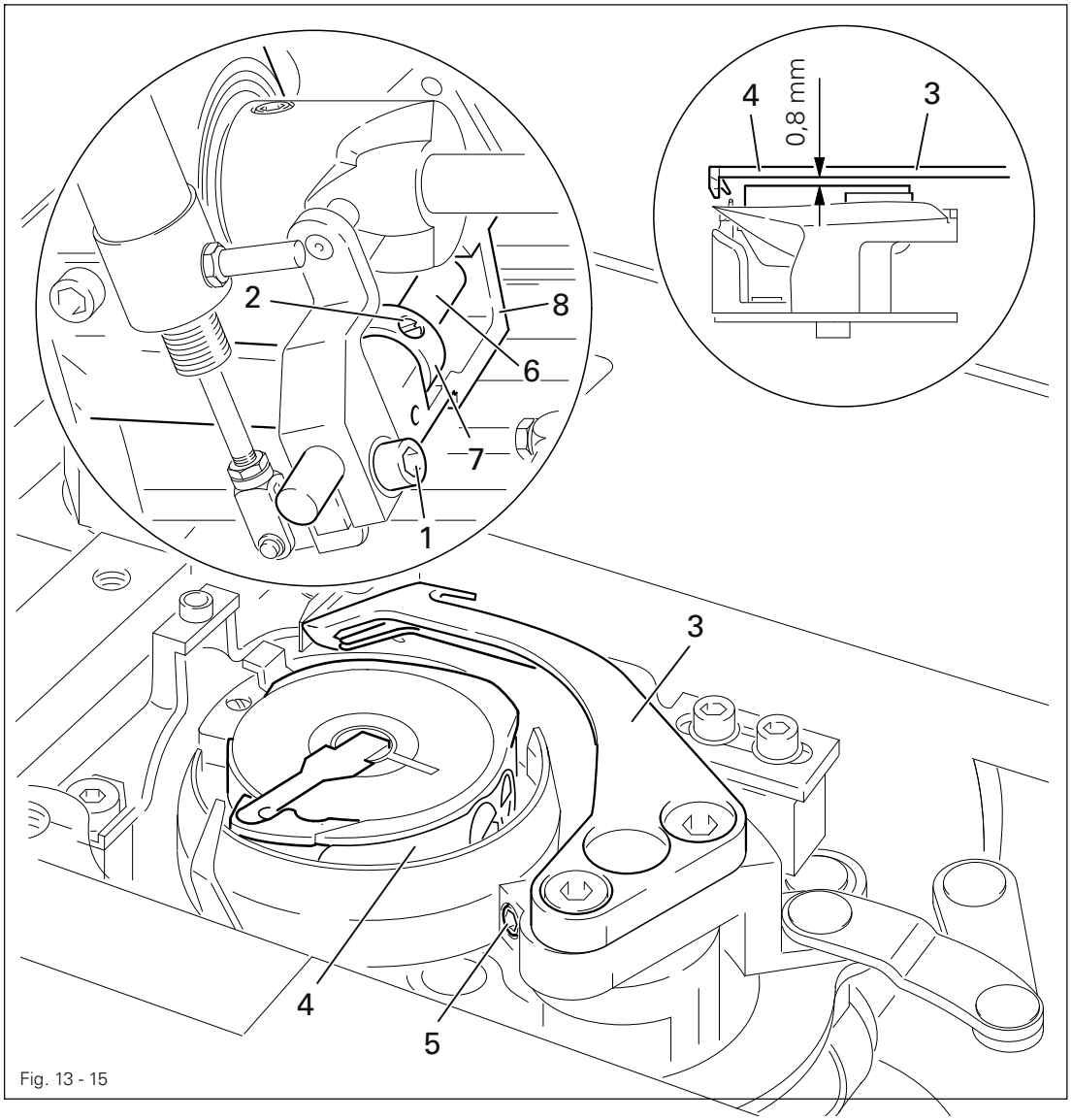

Fig. 13 - 15

- Loosen screws **1** and **2**.
- Position the thread catcher **3** above the bobbin case **4**.
- Move the thread catcher **3** (screw **5**) according to the **requirement**.
- Determine the vertical play of shaft **6**, move retaining collar **7** against bearing housing **8** and tighten screw **2**.

Screw **1** remains slightly unscrewed for further adjustments.

13.05.14 Thread catcher position and knife height

Requirement

When the thread trimmer is in resting position,

1. the front edges of the thread catcher **3** and the knife **5** must be flush with each other.
2. the upper edges of the thread catcher **3** and the knife **5** must be even.

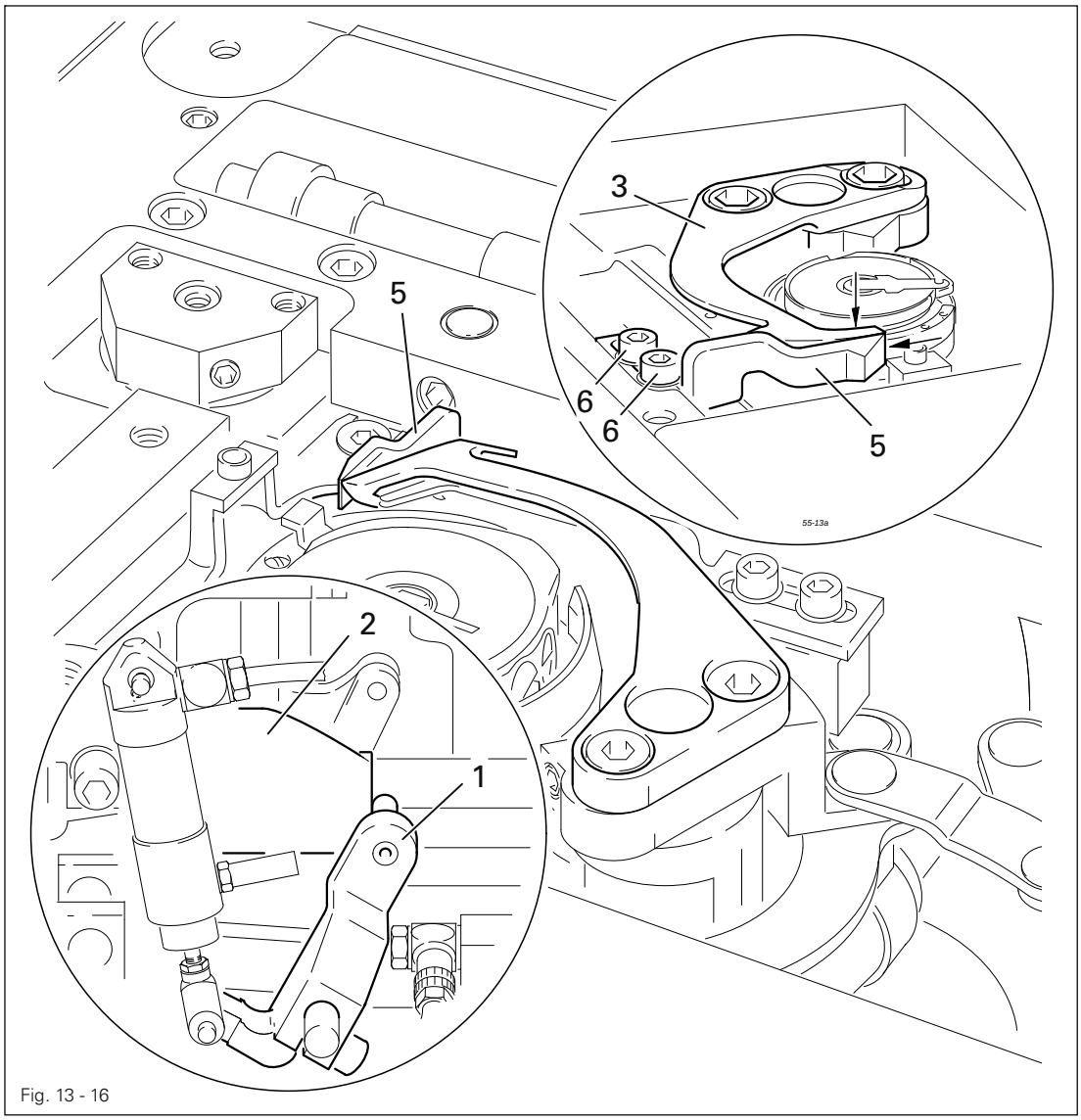

Fig. 13 - 16

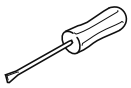

- Bring the needle bar to BDC.
- Move roller lever **1** against control cam **2** by hand.
- Turn the thread catcher **3** according to **requirement 1**.
- Tighten screw **4**.
- Check the knife height according to **requirement 2**.

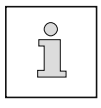

To adjust the height, disassemble knife **5** (screws **6**) and insert shim (part no. **91-141 402-05**) according to the **requirement**.
To align the knife see chapter **13.05.15 Knife pressure**.

13.05.15 Knife pressure

Requirement
When the point of the thread catcher **4** is **6 mm** in front of the front edge of the knife **5**, the cutting edge of the knife must lightly press against the thread catcher **4**.

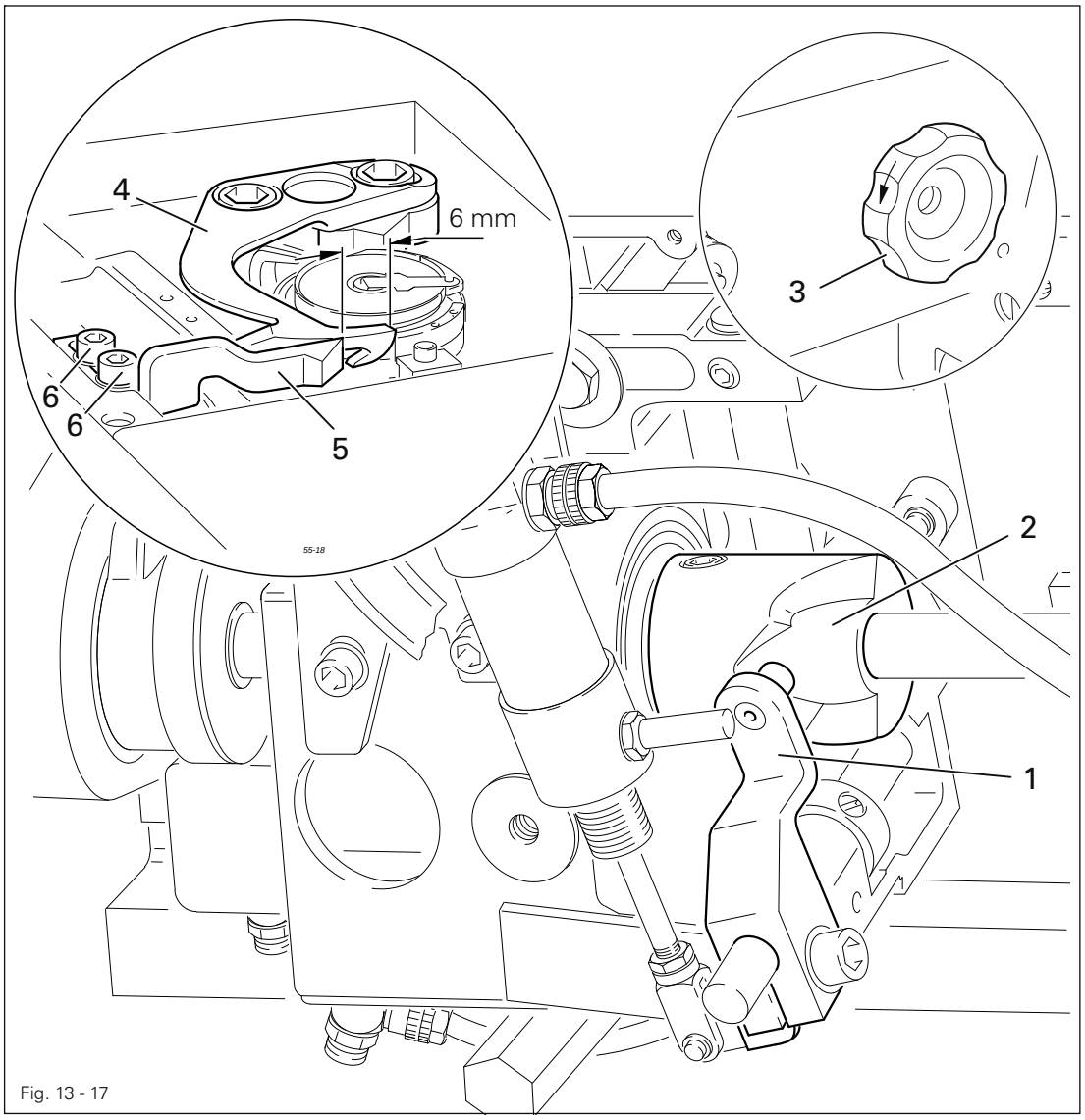

Fig. 13 - 17

- Bring the take-up lever to BDC.
- Press the roller lever **1** into the control cam **2**.
- Turn the handwheel **3** in the direction of the arrow until the thread catcher **4** is approx. **6 mm** in front of the knife **5**.
- Move the knife **5** (screws **6**) according to the **requirement**.
- Check **requirement 1** from chapter **13.05.14 Thread catcher position and knife height**.

13.05.16 Bobbin thread clamp spring

Requirement

The clamp spring **1** must

1. not be pressed down during the movement of the thread catcher.
2. clamp the bobbin thread reliably after it is cut
3. not obstruct insertion and removal of the bobbin case.

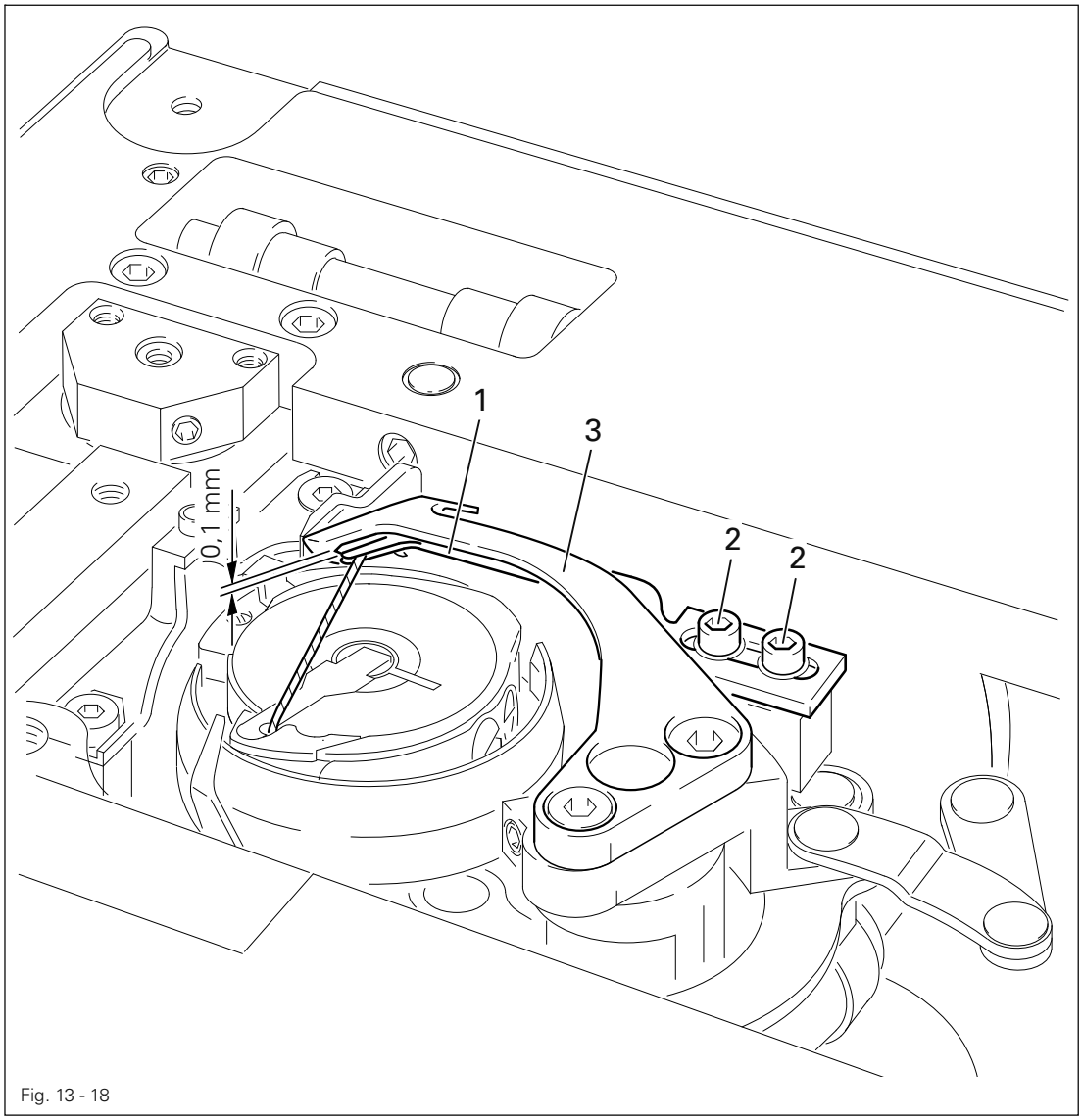

Fig. 13 - 18

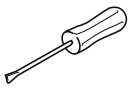

- Bring the thread trimmer to resting position.
- Move the clamp spring **1** (screws **2**) so that the clamp lips are as close as possible to the inside wall and to the front edge of the thread catcher **3**.
- Adjust the height by bending the clamp spring **1** so that between the upper side of clamp spring **1** and the lower side of the thread catcher **3** there is a distance of approx. **0.1 mm**.

13.05.17 Manual cutting test

Requirement

1. When it is moving forward, the thread catcher **1** must not push along the bobbin thread **3** in front of it.
2. At the front point of reversal of the thread catcher **1**, the bobbin thread **3** must lie approx. **2 mm** behind the lug of the thread catcher **1**.
3. At the end of the cutting operation, the needle and bobbin threads must be cut perfectly. The bobbin thread **3** must be clamped.

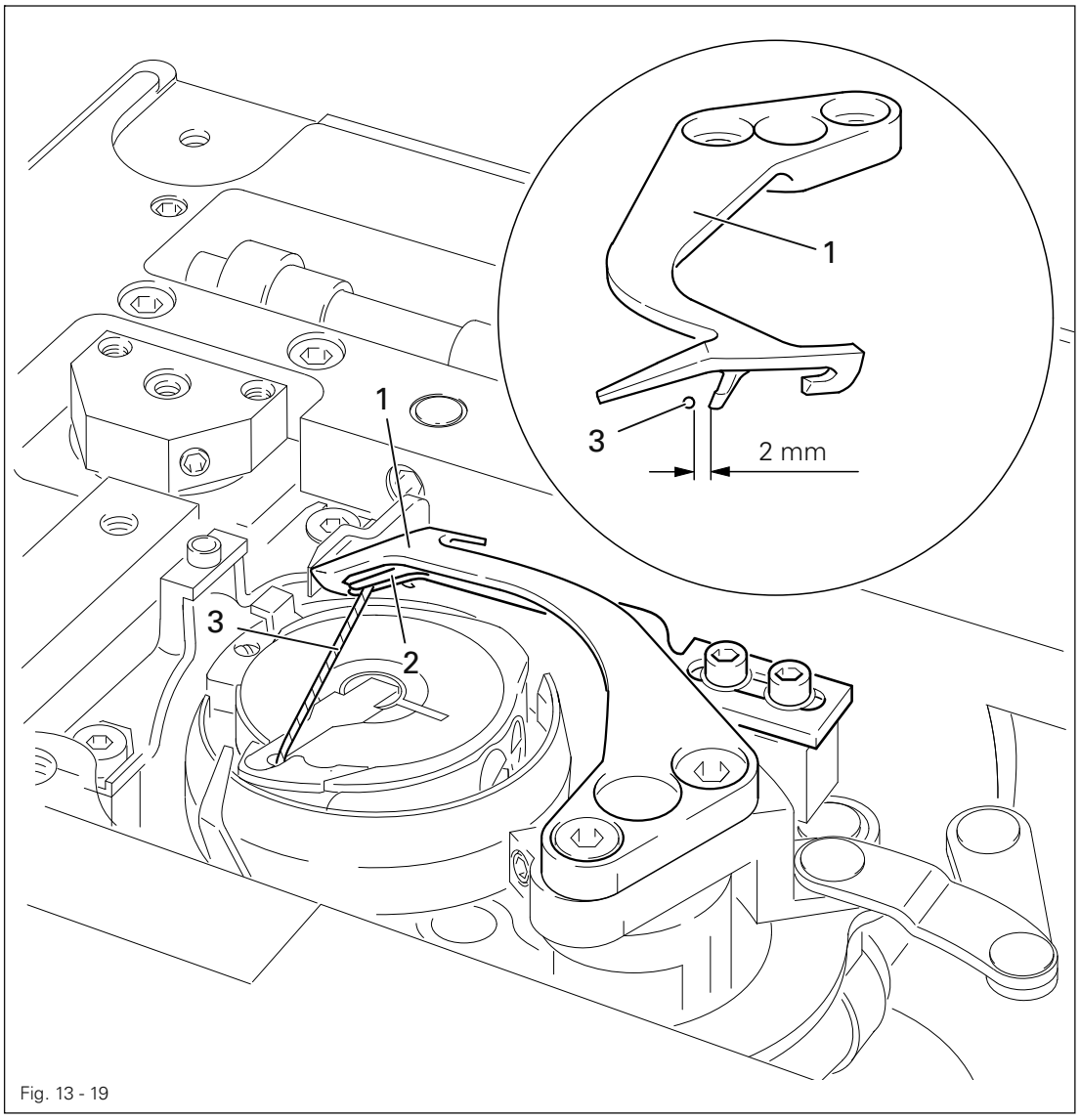

Fig. 13 - 19

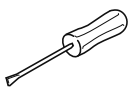

- Carry out the cutting operation manually.
- Check **requirement 1**. If necessary, readjust the thread catcher **1** according to chapter **13.05.13 Thread catcher height.**
- Check **requirement 2**. If necessary, readjust the thread catcher **1** according to chapter **13.05.14 Thread catcher position and knife height.**
- Check **requirement 3**. If necessary, readjust the bobbin thread clamp spring **2** according to chapter **13.05.16 Bobbin thread clamp spring.**

13.05.18 Presser foot stroke position

Requirement
When the needle bar is at b.d.c., presser foot **3** must be at the bottom of its stroke.

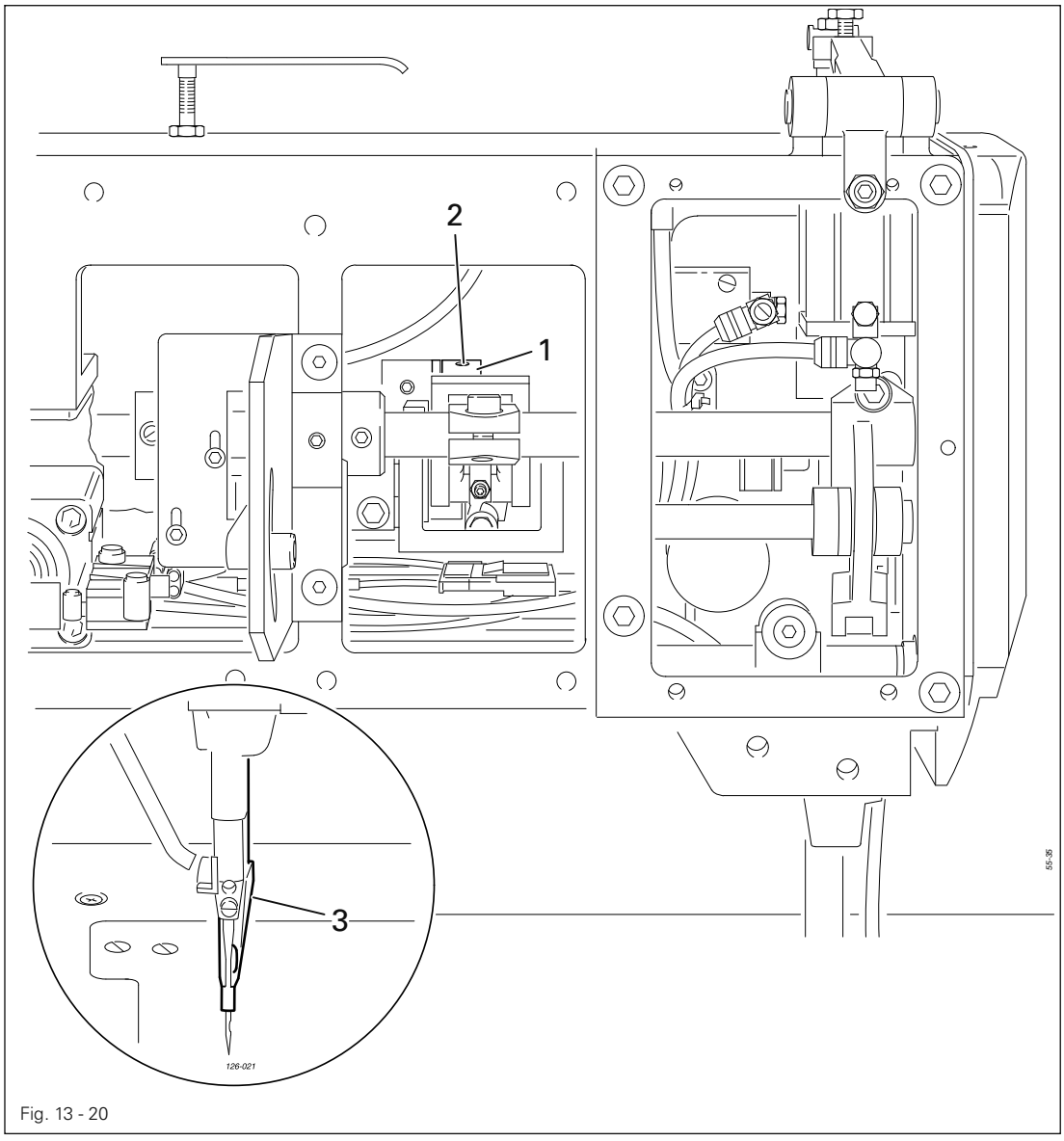

Fig. 13 - 20

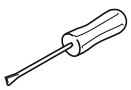

- Adjust eccentric **1** (screws **2**) according to the **requirement**.

13.05.19 Presser foot lifting stroke

Requirement

1. When lever **1** is set at "**0**", the presser foot should not move.
2. With the lift set at **7 mm**, sprocket wheel **7** should just be released.
3. When the needle bar is at b.d.c., and the lever **1** is set at "**10**", joints **9** should be in line.

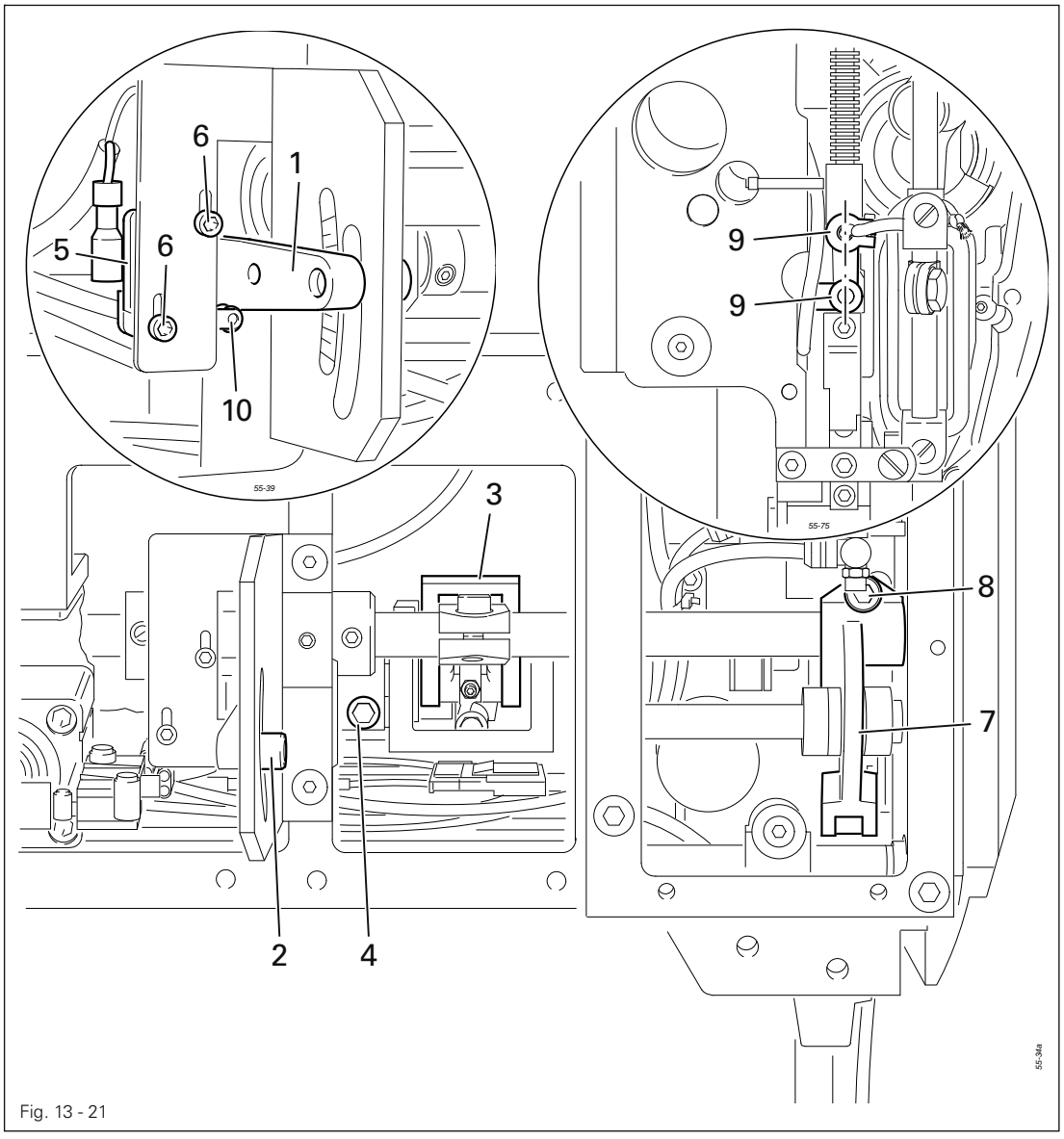

Fig. 13 - 21

- Set lever **1** (screw **2**) at "**0**".
- Adjust crank **3** (screw **4**) according to **requirement 1**.
- Set lever **1** (screw **2**) at "**7**".
- Adjust switch **5** (screw **6**) according to **requirement 2**.
- Set lever **1** (screw **2**) at "**10**".
- Adjust lever **7** (screw **8**) according to **requirement 3**. (When joints **9** are over-extended, a double stroke is carried out.)

13.05.20 Adjust presser foot to material thickness

Requirement
At its b.d.c. the presser foot should be a distance above the counter presser equivalent to the thickness of the material.

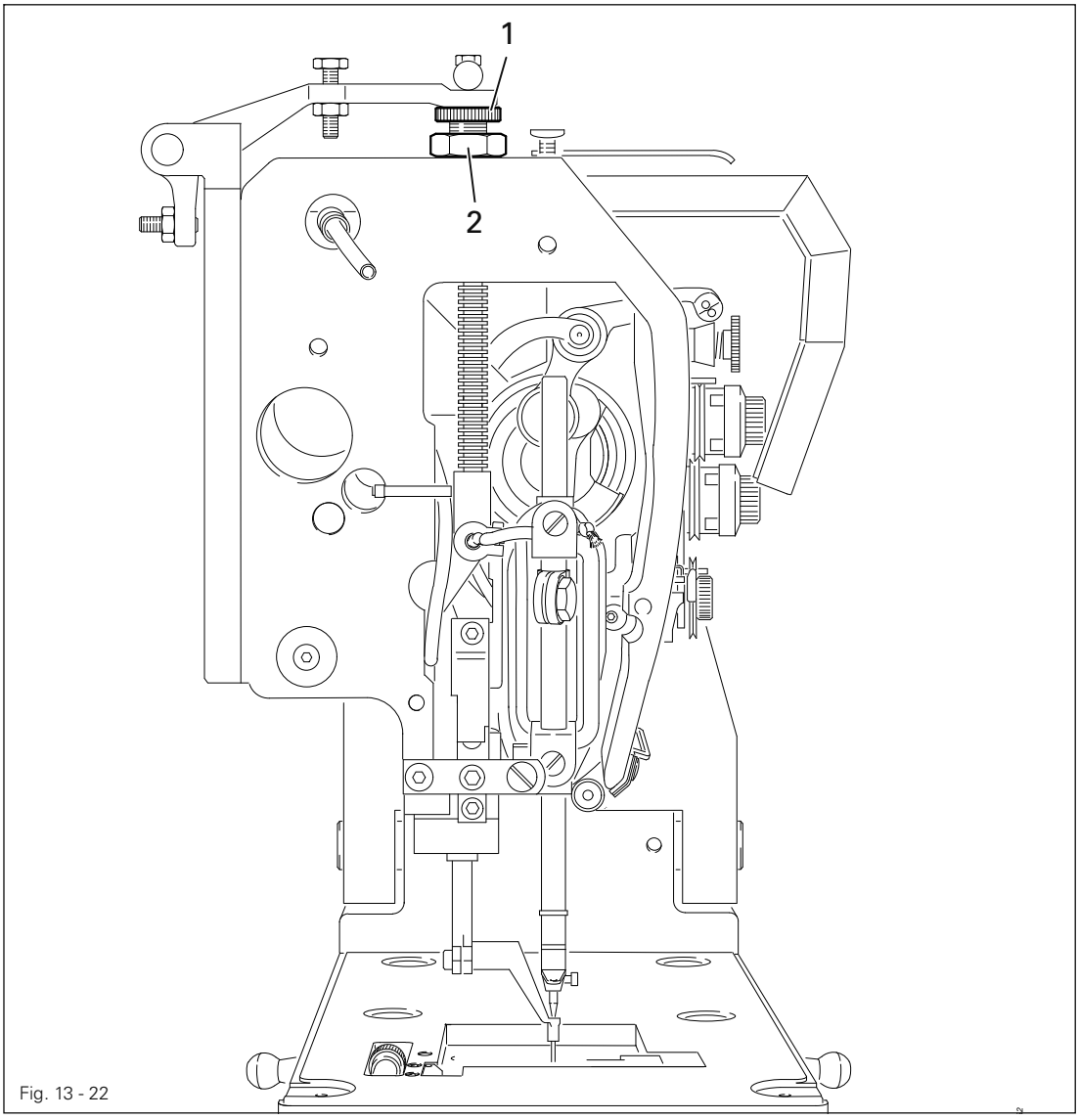

Fig. 13 - 22

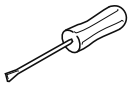

- Adjust knurled screw **1** (screw **2**) according to the **requirement**.

13.05.21 Presser foot height

Requirement
When the needle bar is at t.d.c. and the presser foot **3** raised, the needle must not protrude below the presser foot.

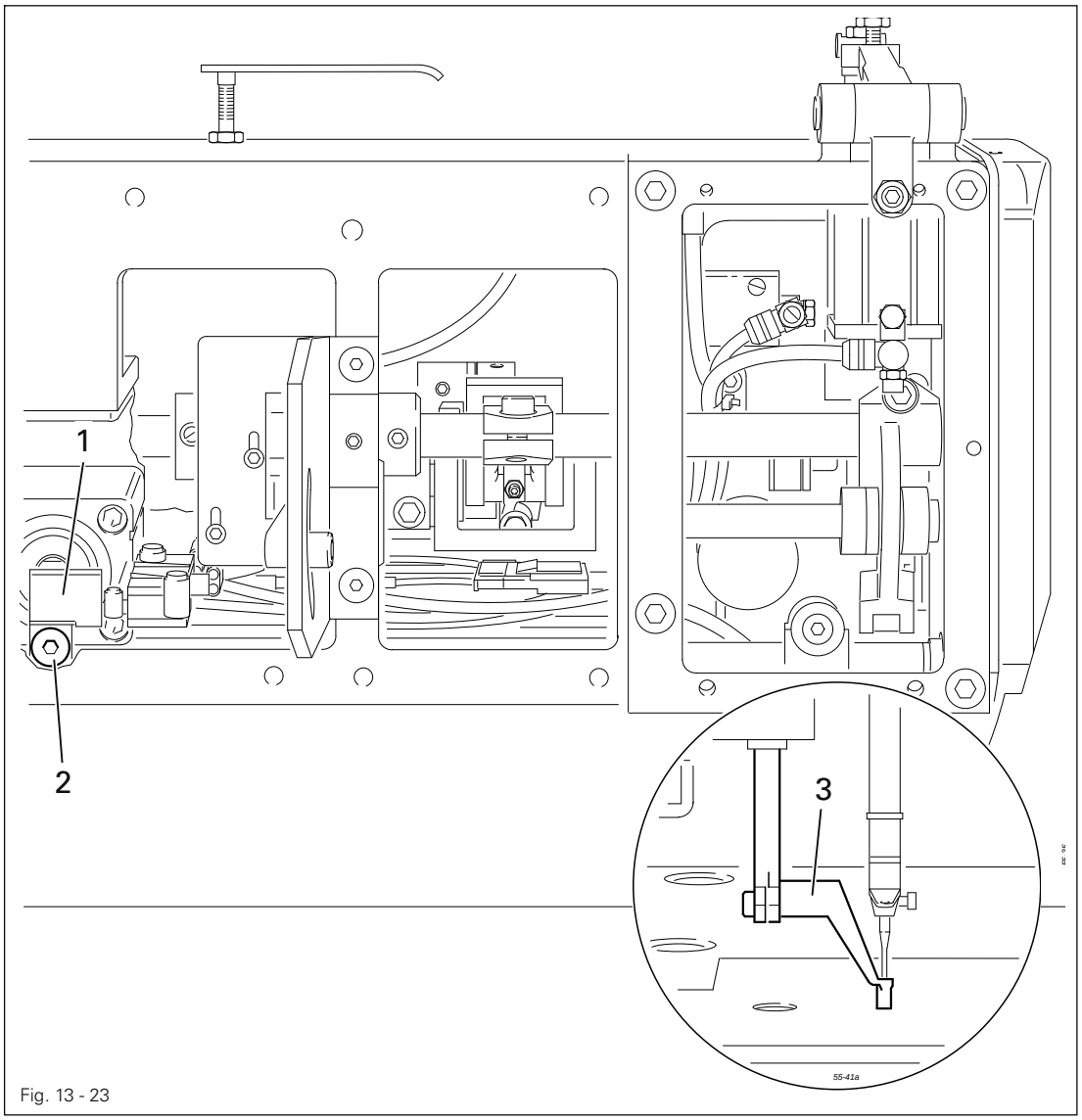

Fig. 13 - 23

- Adjust clamp **1** (screw **2**) according to the **requirement**.

13.05.22 Adjustment of the presser foot level

Requirement

1. When the presser foot level is programmed, the second foot height should be set so that presser foot **5** is a distance above the counter presser **6** equivalent to the thickness of the workpiece.
2. When the needle bar is at b.d.c. and the level adjustment is raised to its maximum, the needle bar must not touch presser foot **5**.

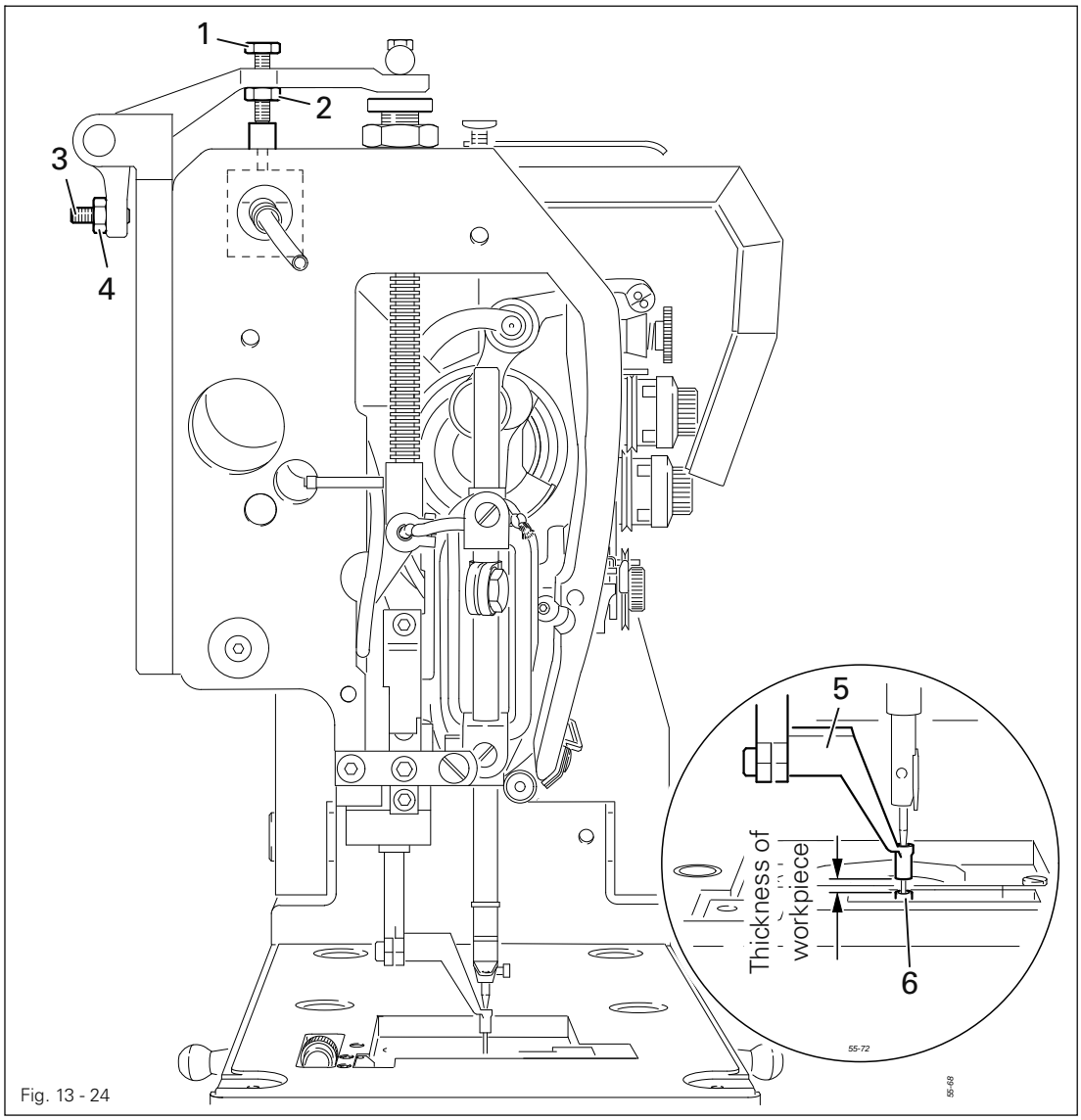

Fig. 13 - 24

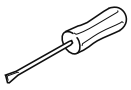

- Adjust screw **1** (nut **2**) according to **requirement 1**.
- Adjust screw **3** (nut **4**) according to **requirement 2**.

13.05.23 Bobbin winder

Requirement

1. When the bobbin winder is switched on, the bobbin winder spindle must move securely with the winder.
2. When the bobbin winder is switched off, friction wheel **5** must not be driven by drive wheel **1**.
3. The bobbin winder must switch off automatically when the bobbin has been filled to approx. **1 mm** from the edge.

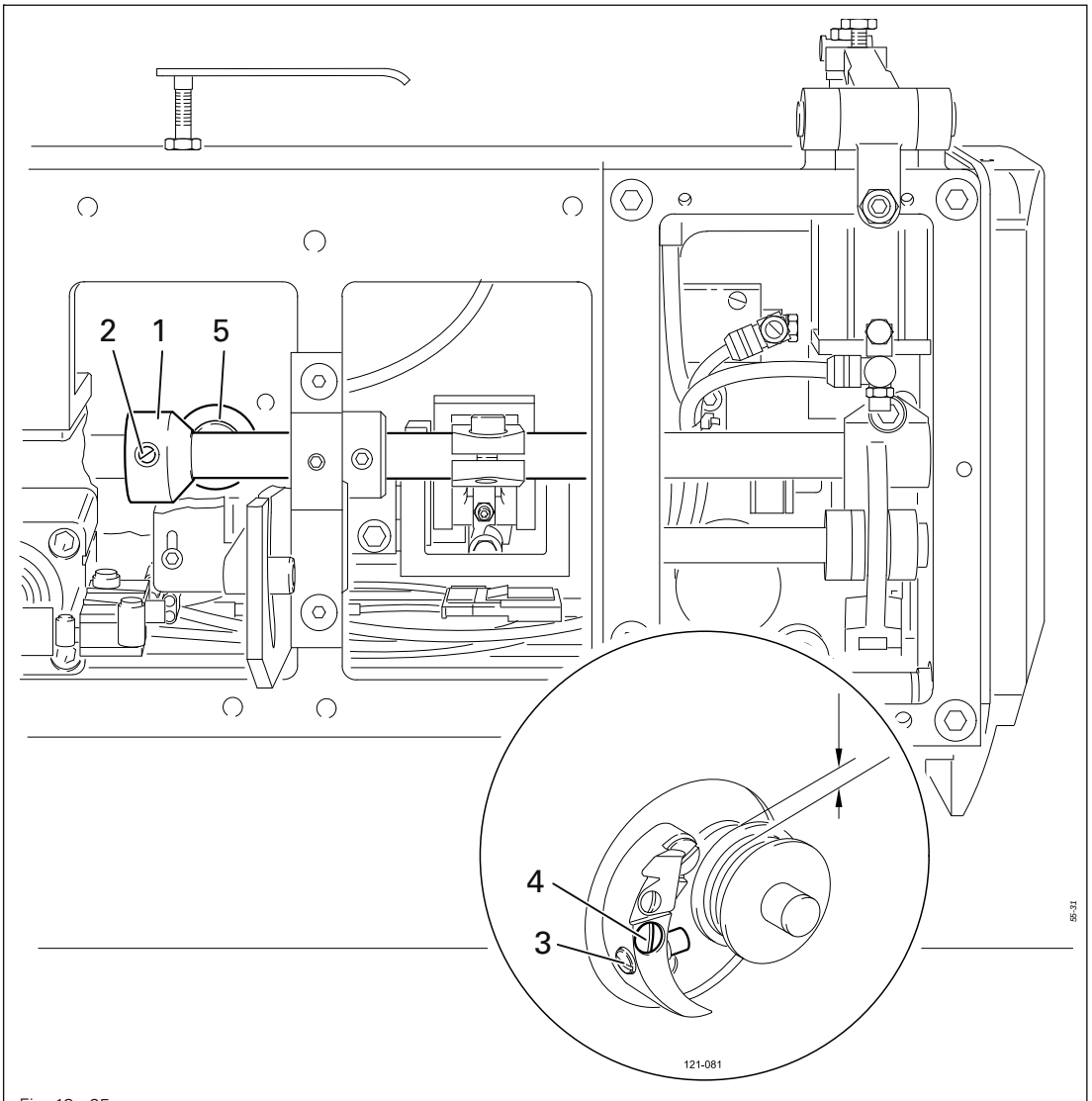

Fig. 13 - 25

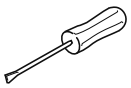

- Move drive wheel **1** (screws **2**) according to **requirement**s **1** and **2**.
- Move pin **3** (screw **4**) according to **requirement 3**.

13.05.24 Needle thread tension release

Requirement
For the tension release, the distance between the tension disks must be **0.5 mm**.

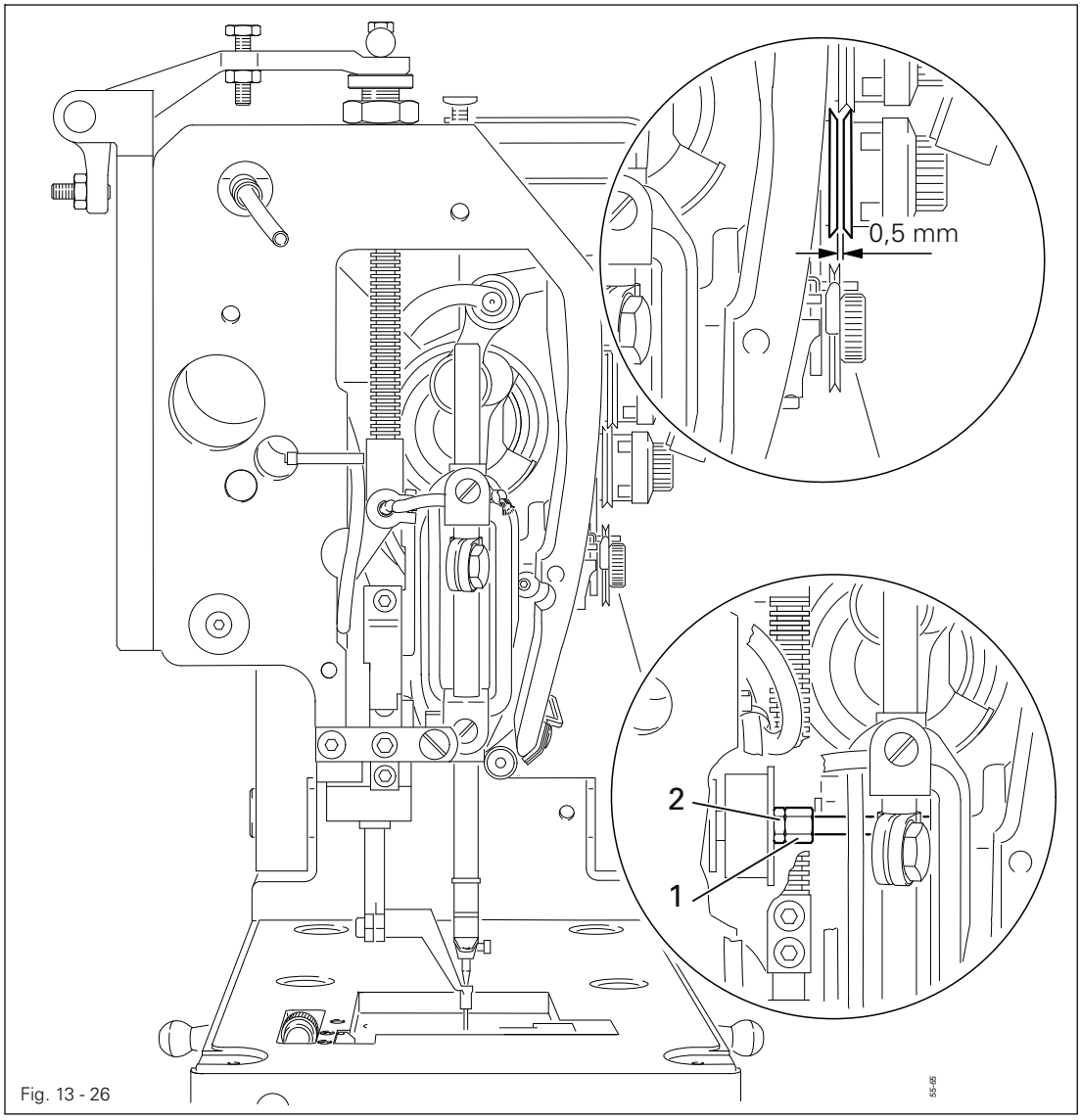

Fig. 13 - 26

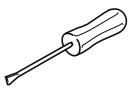

- Turn screw **1** (nut **2**) according to the **requirement**.

13.05.25 Thread check spring and slack thread regulator

Requirement

1. The stroke of thread check spring **7** must be completed when the needle point penetrates the material (travel of the spring approx. **7 mm**).
2. When the thread loop is at its largest when going round the hook, the thread check spring **7** must be lifted slightly above support **1**.

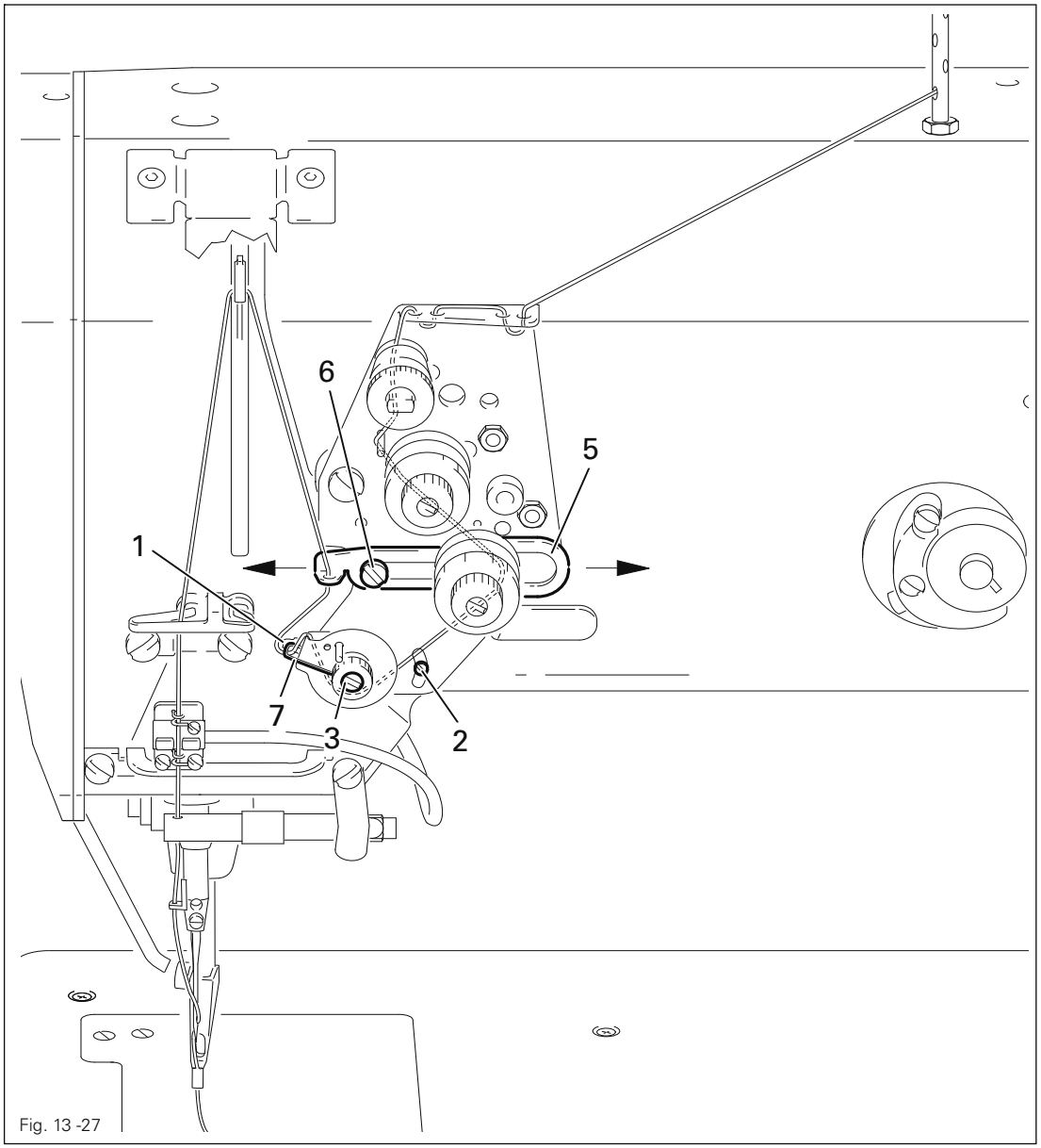

Fig. 13 -27

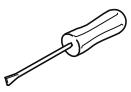

- Position rest **1** (screw **2**) according to **Requirement 1**.
- To adjust the spring tension, turn screw **3** (screw **4**).
- Position thread regulator **5** (screw **6**) according to **Requirement 2**.

For technical reasons, it may be necessary to deviate from the travel of the spring and/or the spring tension indicated here.

13.05.26 Sewing head lifting cylinder

Requirement
The up and down movement of the sewing head must be uniform.

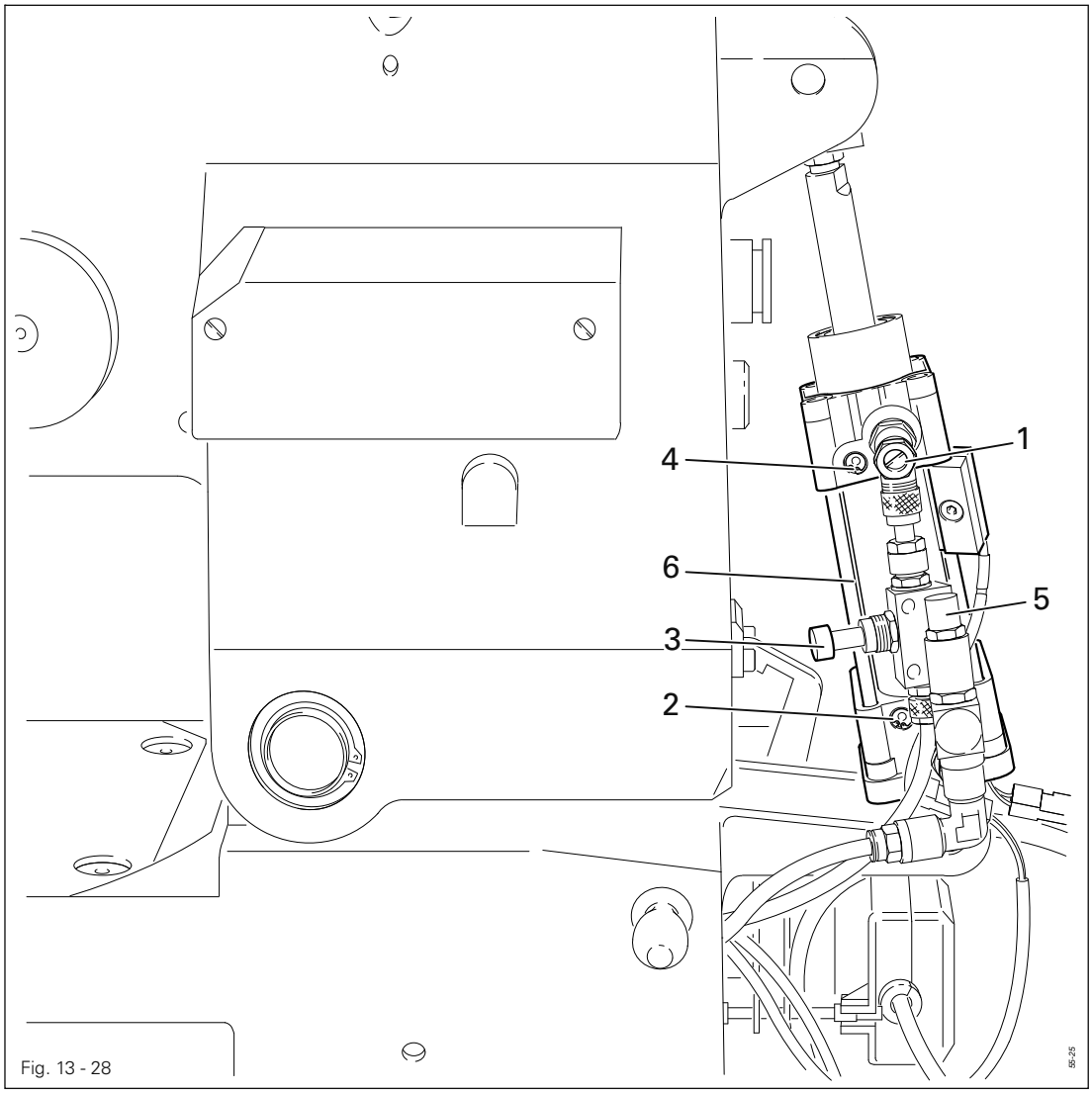

Fig. 13 - 28

- Insert the sewing head and connect. (See chapter **13.04 Removing/inserting sewing head**.)
- Adjust the speed (screw **1**) and shock absorbing action (screw **2**) of the upwards movement of the sewing head, and the speed (screw **3**) and shock absorbing action (screw **4**) of the downwards movement of the sewing head according to the **requirement**.

The pressure for the downward movement can be regulated with screw **5** (standard setting **4.5** bar).

When adjusting the shock absorbing action, make sure that the cylinder **6** moves as far as it can go especially for the downward movement of the sewing head!

13.05.27 Bobbin thread slide

Requirement

When bobbin thread slide **5** is in its resting position

1. There should be a clearance of **12 mm** between the front edge of the needle plate and the rear edge of the bobbin thread slide **5**,
2. The top edge of the bobbin thread slide **5** should be flush with the top edge of the needle plate and
3. The bobbin thread slide **5** should be slightly touching the needle plate.
4. In an extended position there should be a clearance of **18.5 mm** between the rear edge of bobbin thread slide **5** and the front edge of the needle plate.

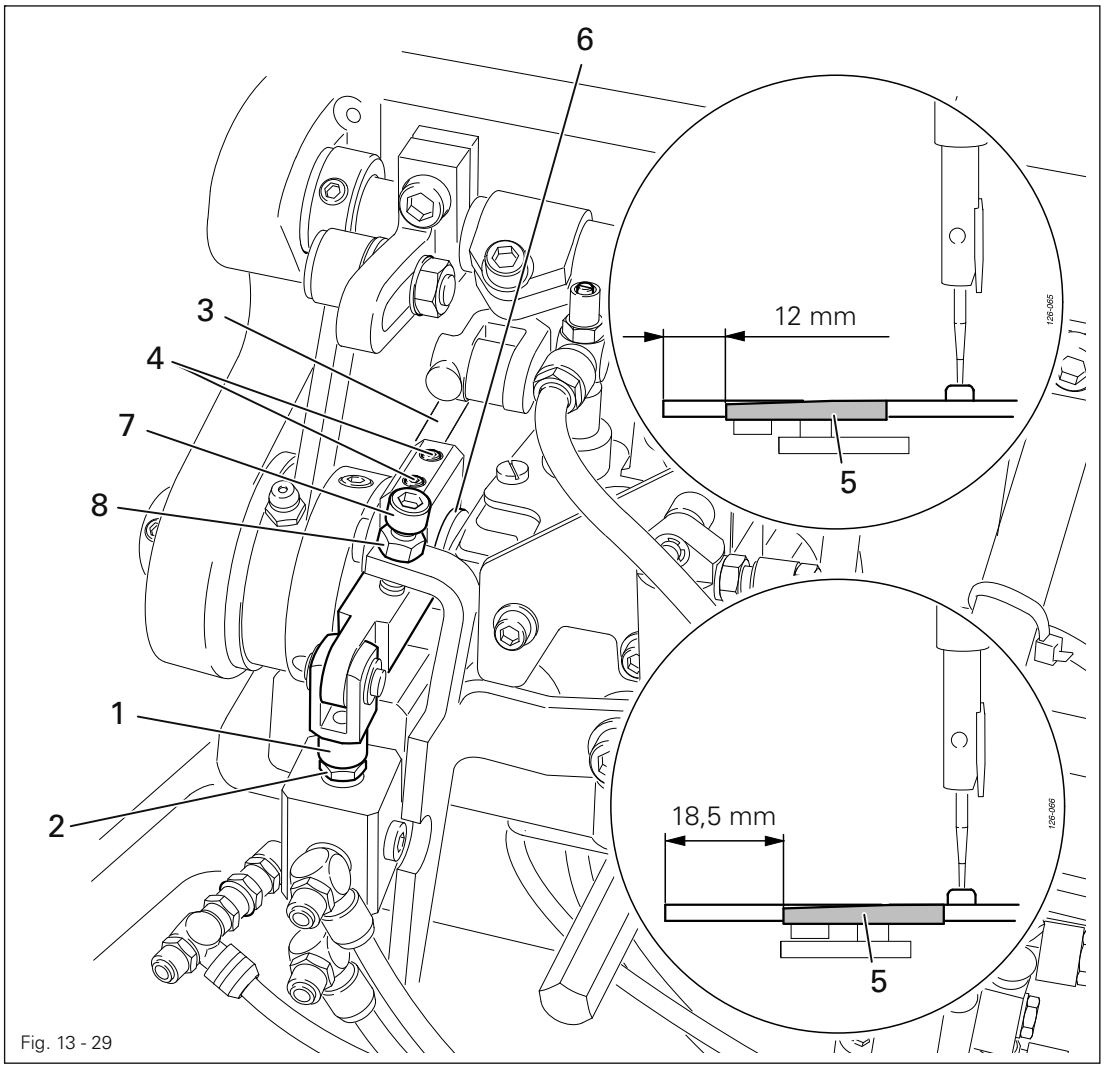

Fig. 13 - 29

- Turn plunger **1** (nut **2**) in accordance with **requirement 1**.
- Adjust holder **3** (screws **4**) in accordance with **requirement 2**.
- Using supports **6**, move bobbin thread slide **5** into position in accordance with **requirement 3**.
- Adjust stop **7** (nut **8**) in accordance with **requirement 4**.

13.05.28 Hook lubrication

Requirement
When the machine is running, after approx. **10** seconds a fine line of oil must form on a paper strip **4** held next to the hook.

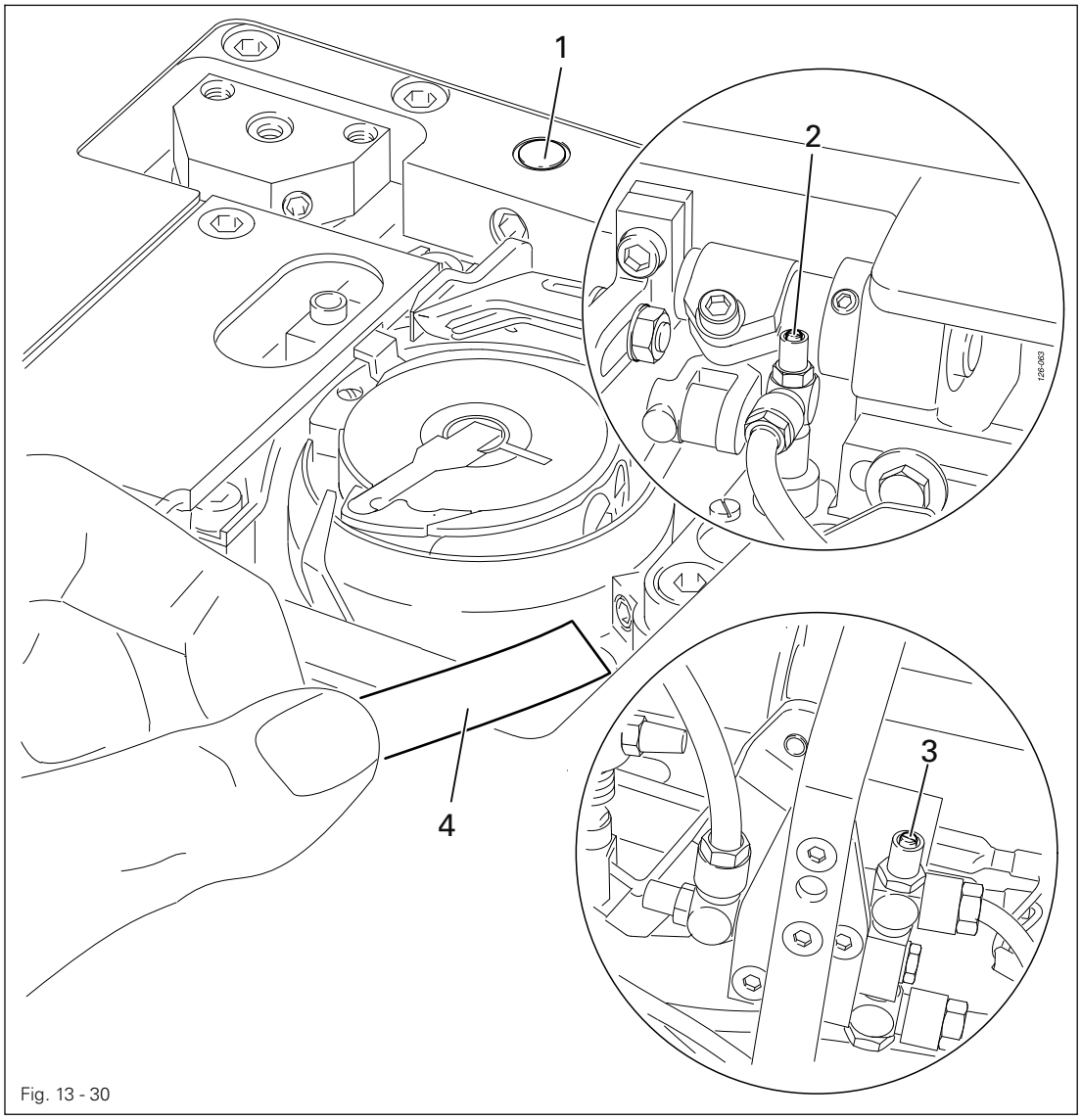

Fig. 13 - 30

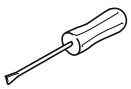

- Unscrew hook compartnant cover.
- Cover sensor **1** with metal ruler.
- Turn on machine.



- Call up the input menu.



- Call up the "sewing motor adjustment" function, see Chapter **13.08 Sewing motor adjustments.**
- Set the speed at **2000** min^{-1}.



When the sewing motor is running, do not reach into the needle area!
Danger of injury by the moving parts!

- Allow the sewing motor to run for 2-3 min.
- While the motor is running, hold a paper strip 4 next to the hook and check the **requirement**.
- If necessary, adjust the oil supply with screw 2.
- Switch the machine off and screw on the hook compartment cover.



The wick used for lubricating the front parts must always be impregnated with oil. However, oil must not drip onto the bedplate!
If necessary, adjust the amount of oil with screw 3.

13.06 Adjusting the template drive

13.06.01 Monitoring the template drive

Requirement
The initiators **1** and **3** must be set at a distance of **0.2 mm** each to the contact surfaces.

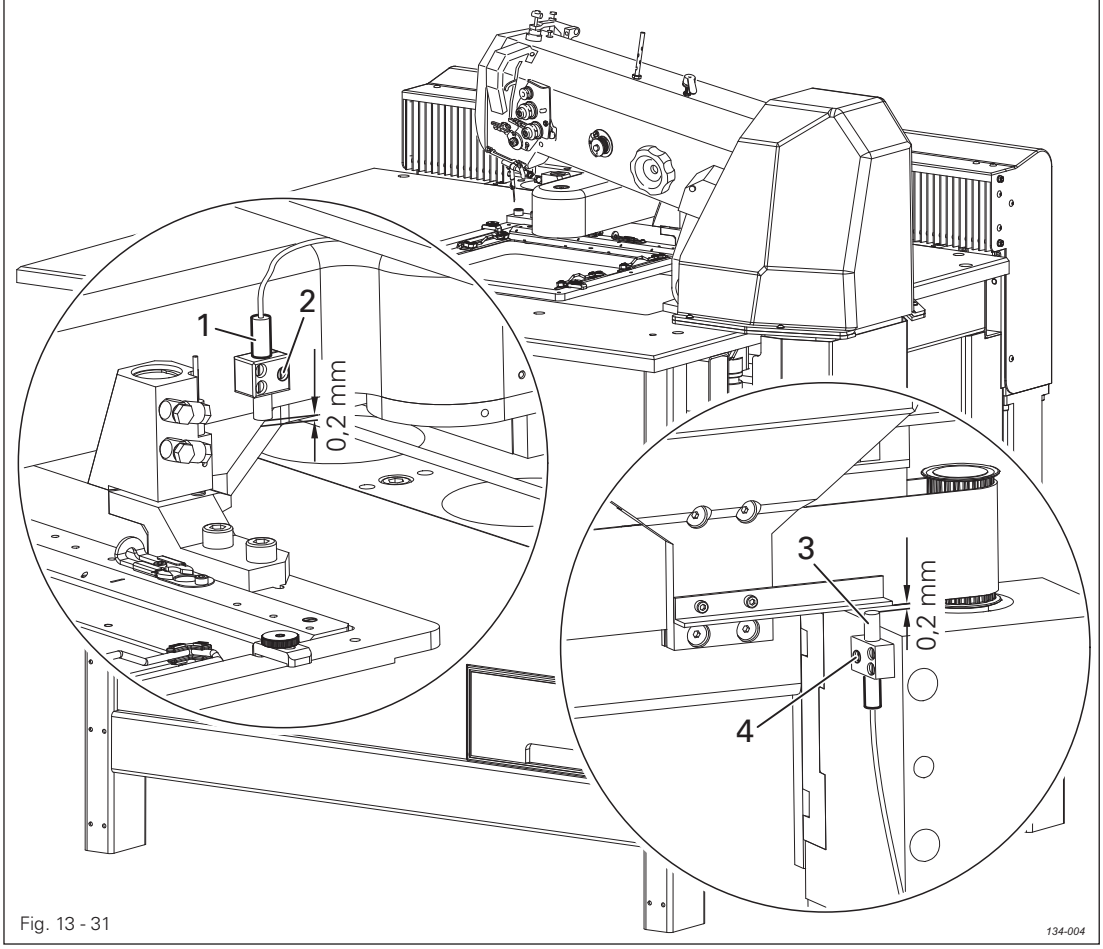

Fig. 13 - 31

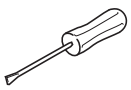

- Set initiator **1** (screws **2**) and initiator **3** (screws **4**) of the **control** accordingly.

13.06.02 Aligning the template drive

Requirement
Template **2** should lightly and evenly touch the entire table top area.

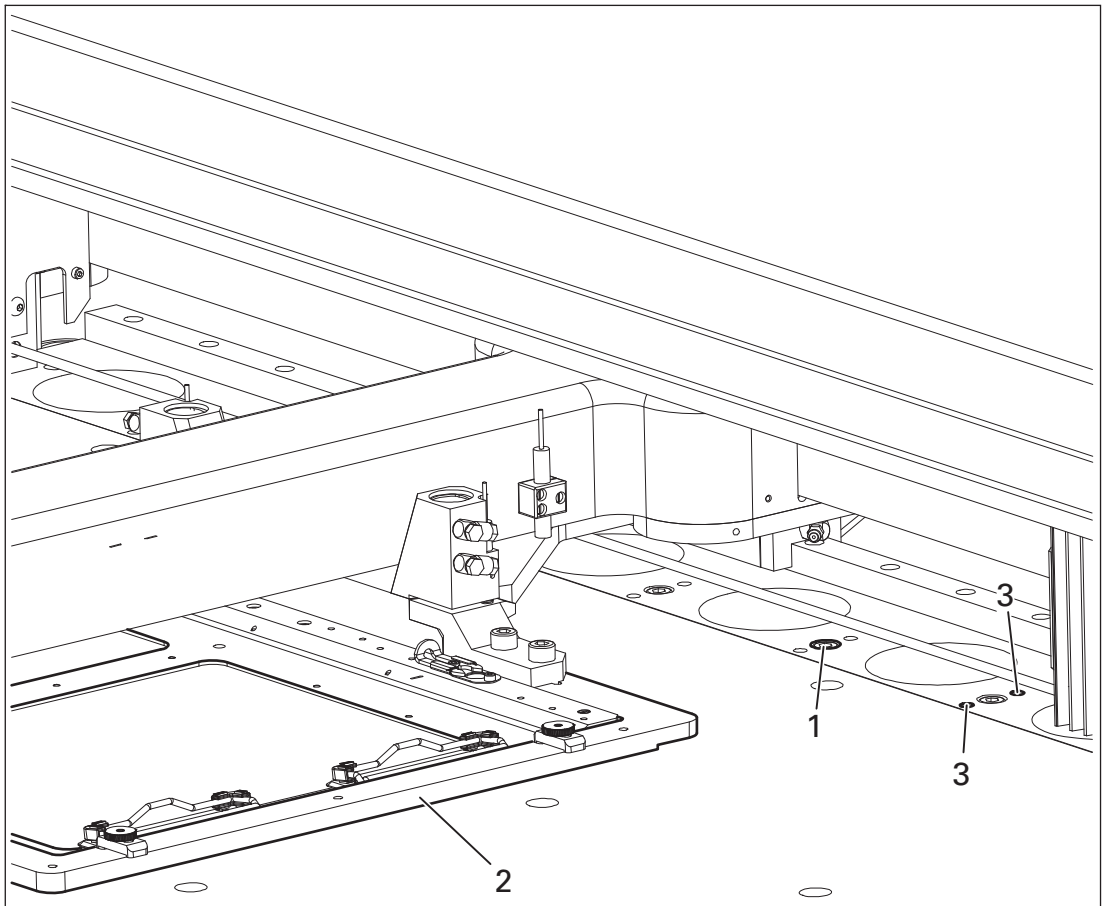

Fig. 13 - 32 134-016

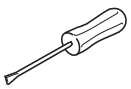

- Loosen seven screws (**1**).
- Align template **2** by turning the fourteen screws **3** according to the **requirement**.
- Tighten screws (**1**).

13.06.03 Adjusting the belt tensions

Requirement
The belt tensions should be tested and adjusted with measuring device **5**.
The belt tensions of the jig drive should be tested with a reading of **1100** Nm (belt width **50 mm**).

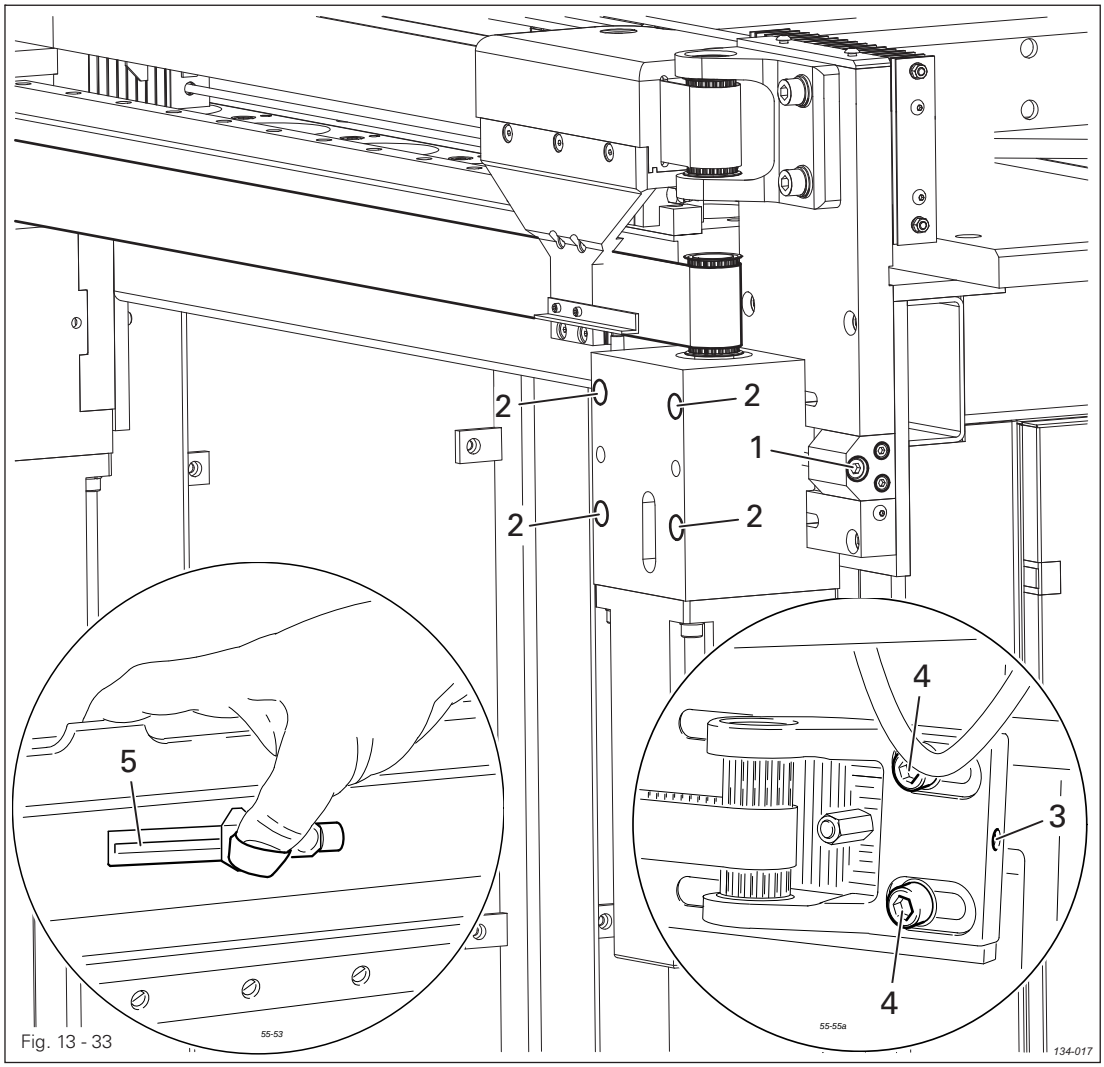

Fig. 13 - 33

- Adjust belt tension of the lower belt with screws **1** (screws **2**) in accordance with the **requirement**.
- Adjust belt tension of the lower belt with screws **3** (screws **4**) in accordance with the **requirement**.

Information about the correct use of measuring device **5** can be found in the enclosed instructions for measuring device **5**.

13.06.04 Jig drive reference points

Requirement
With the "reference points" function the jig drive should move exactly to all reference points.

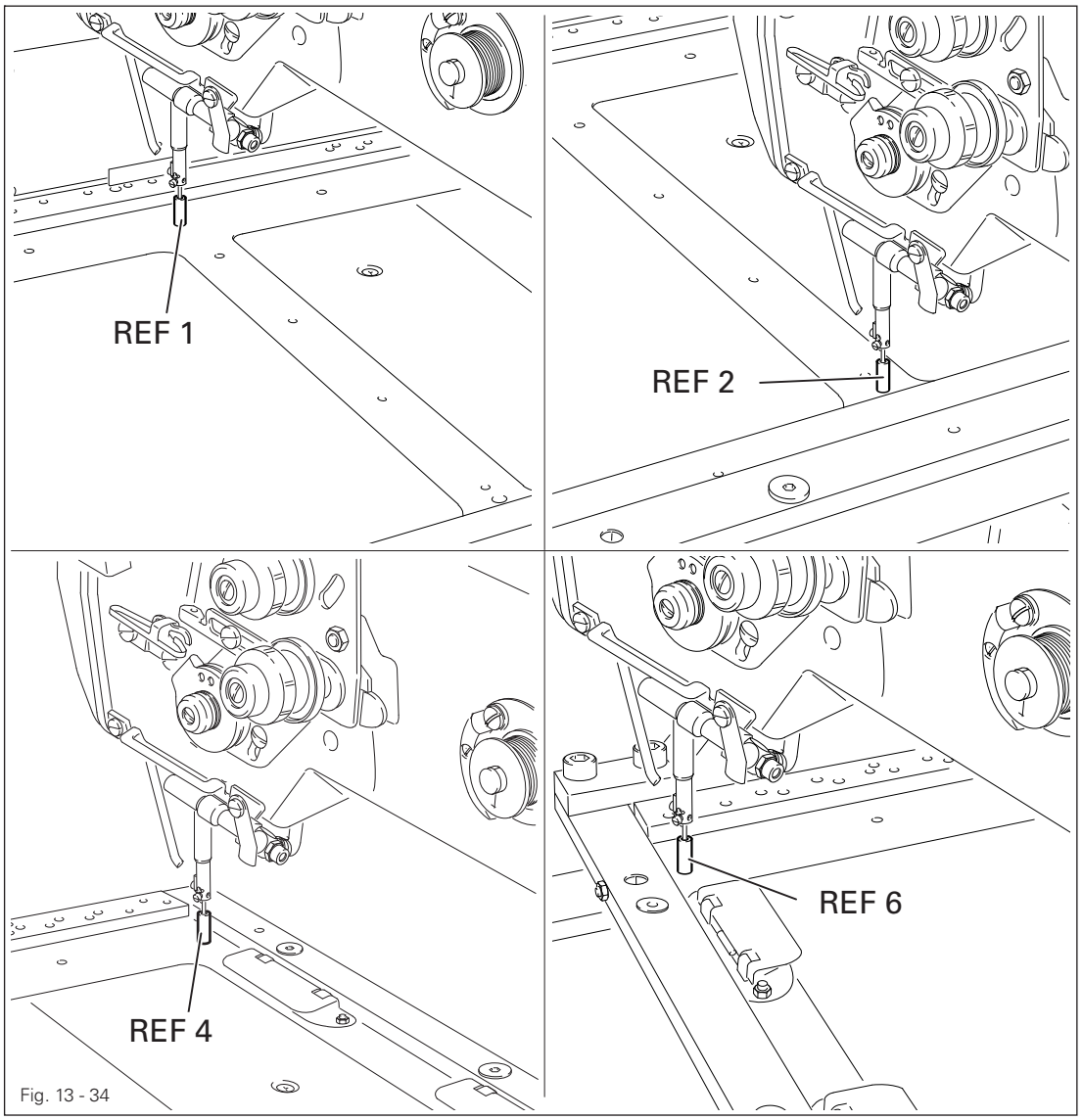

Fig. 13 - 34

- Switch on the machine.
- Call up the input menu.
- Call up function "Test template drive" from the service function menu.
- Insert jig and press Enter.
- Move to first reference point (**REF 1**).
- Move to all the reference points one after the other.

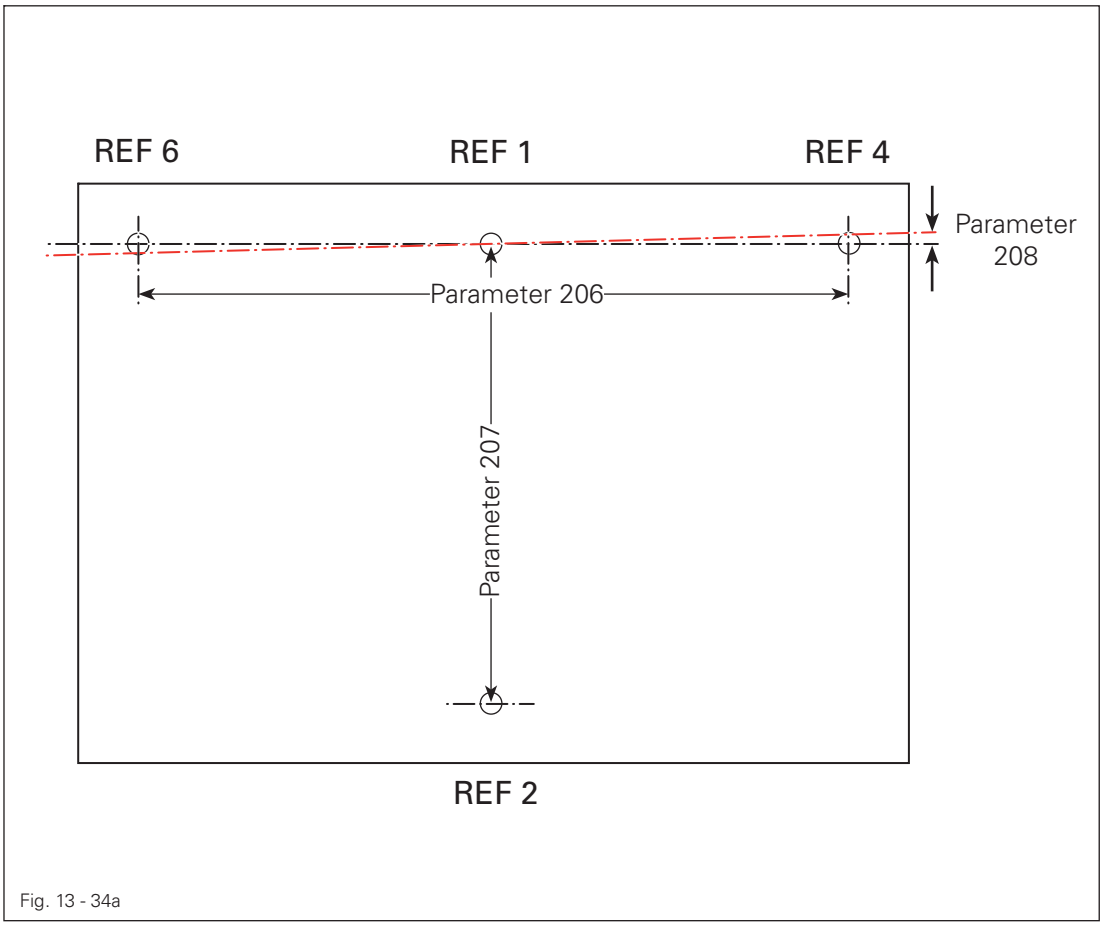

Fig. 13 - 34a

Setting at length deviation from **REF 1** to **REF 2**:

- Adjust zero points as explained in **chapter 8.07 Check/ set zero points**.
- Carry out increment correction via parameter "**207**" according to the **requirement**.

Setting at length deviation from **REF 4** to **REF 6**:

- Carry out increment correction via parameter "**206**" according to the **requirement**.

Setting the parallelism from **REF 4** to **REF 6** (see Fig. 13 - 34a):

- Correction via parameter "**208**" according to the **requirement**.

After an increment correction the zero points must be checked and, if necessary, adjusted, see Chapter **8.07 Check/adjust zero points.**

13.07 Service menu

The status of the digital inputs is displayed in the service menu. The outputs can be set or reset manually. In addition it is also possible to call up functions for carrying out a cold start, for loading the operating program and for setting the control panel.

- Switch on the machine.



- Call up the input mode.

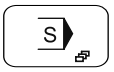

- Call up the service menu.

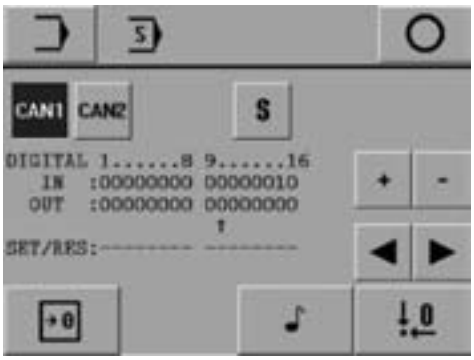

Explanation of the functions



Input mode
This function is used to change to the initial state of the input mode.



Conclude input
This function is used to conclude the input and change into the sewing mode.



Can-nodes
This function is used to select the required Can-node. The currently selected Can-node is shown as an inverse symbol.



Special outputs
This function is used to set or reset special outputs.

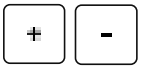

Plus/minus keys
These are used to set (+) or reset (-) the selected output.

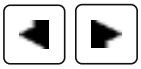

Arrow keys
These are used to select the desired outputs.

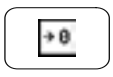

Cold start
This function is used to carry out a cold start, see Chapter **13.07.01 Cold start**.



Switching the key tone on / off
This function is used to switch the key tone on or off, see Chapter 8.06 Activate/deactivate key tone.

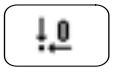

Adjusting the zero points
This function is used to call up a menu for setting the zero points, see Chapter 8.09 Adjusting the zero points..

13.07.01 Cold start



When a cold start is carried out, all newly created or altered programs, as well as all altered parameter settings are deleted!
The machine memory is deleted or set back to the status at the time of delivery.



- Switch on the machine and call up the input mode.

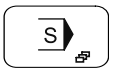

- Call up the service menu.



- Call up the cold start function.





- Confirm that a cold start is to be carried out.

Explanation of further functions



Input mode
This function is used to change to the initial state of the input mode.



Service menu
This function is used to return to the service menu, see Chapter 13.23 Service menu.



Conclude input
This function is used to conclude the input and change into the sewing mode.



Esc
The input is interrupted.

13.07.02 Loading / updating the operating program

To boot a new machine software, a sd-card with the needed files has to be plugged in the sd-slot of the control panel.

- Switch on the machine and push the button "FORCE UPDATE".

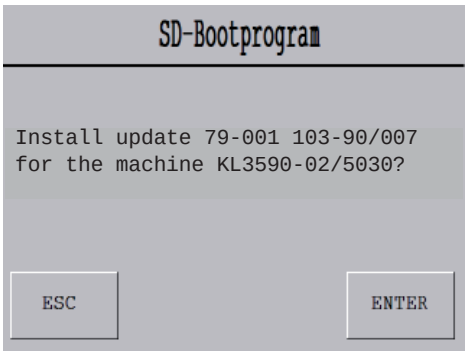

- Start the bootsequence with the key "ENTER".

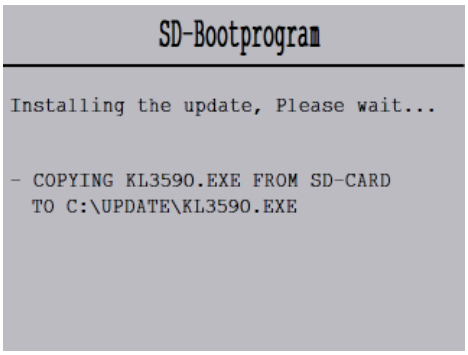

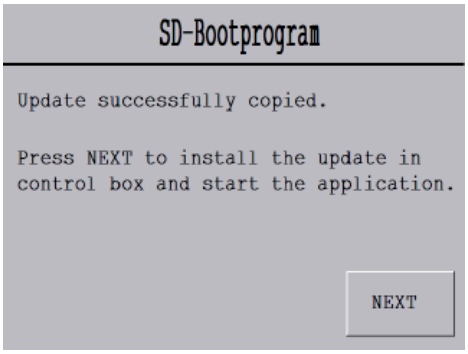

- To install the software, push the key "NEXT".

13.08 Sewing motor adjustments

- Switch on the machine.



- Call up the input mode.

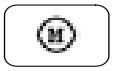

- Call up menu for testing and setting of the sewing motor.

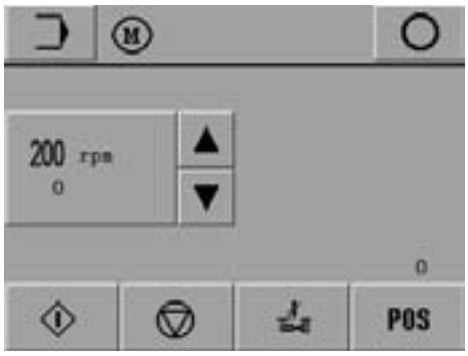

Explanation of the functions



Conclude input
This function is used to conclude the input and change into the sewing mode.

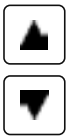

Speed adjustment
This function is used to increase or reduce the set speed.



Sewing motor start
This function is used to start the sewing motor with the set speed.



Sewing motor stop
This function is used to stop the sewing motor again.



Thread trimming cycle
This function is used to run the thread trimming cycle.



Needle function
The current actual position of the needle is displayed.
To set the t.d.c. position of the needle bar, bring the needle bar to the appropriate position by turning the balance wheel and take over this position by operating the "POS" key.

13.09 Parameter settings

All parameters which can be altered are shown in the list of parameters (Chapter **13.09.02**).
A description of how to select parameters and alter the values is given below.

13.09.01 Selecting and altering parameters.



- Switch on the machine and call up the input mode.



- Call up the parameter input function.

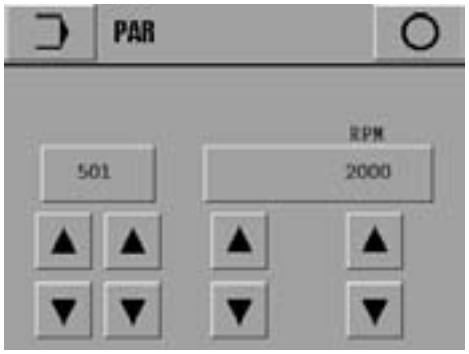

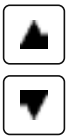

- Select the parameter separately by group (hundred figure) and parameter within the function group.

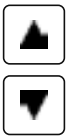

- Alter the value of the selected parameter.



- Quit parameter input function.

13.09.02 List of parameters

Group	Parameter	Description	Setting range	Set value
100	101	Bobbin thread monitor (0 = off; 1 = counter; 2 = sensor; 3 = sensor +stop)	0 - 3	1
	102	Needle thread monitor (0 = off; 1 = on)	0 -1	1
	103	Fade-out stitches needle thread monitor. The number of stitches, during which the needle thread monitor is not activated during sewing, is changed.	0 – 99	5
	104	Fade-out stitches bobbin thread monitor. The number of stitches, during which the bobbin thread monitor is not activated during sewing, is changed.	0 – 99	5
	105	Reaction time needle thread monitor. The sensitivity of the needle thread monitor is altered (1 = quickest reaction, max. sensitivity)	1 - 9	1
	106	Retracing stitches The number of stitches which are automatically retraced after a needle thread error, is changed.	0 - 99	15
	107	Automatic clamp opening 0 = off; 1 = on	0 - 1	0
	108	Flip-flop mode foot switch 0 = off; 1 = on	0 - 1	0
	109	Jig monitoring 0 = off; 1= Jig monitoring; 2 = automatic program number selection	0 - 2	0
	110	Demo mode 0 = off; 1 = on	0 - 1	0
	111	OUT1 only for bobbin thread slide 0 = off; 1 = on	0 - 1	0
	112	-	-	-

Group	Parameter	Description	Setting range	Set value
100	113	Continuous template transport 0 = intermitting; 1 = continous; 2 = automatic	0 - 2	2
	114	Automatic switch to next sequence 0 = off; 1 = on	0 - 1	1
	115	Min. X-Coordinate	-1/3030 -1500 to max. X-Coordinate	-1500
		Min. X-Coordinate	-2/5030 -2500 to max. X-Coordinate	-2500
	116	Max. X-Coordinate	-1/3030 min. X-Coordinate to 1500	1500
		Max. X-Coordinate	-2/5030 min. X-Coordinate to 2500	2500
	117	Min. Y-Coordinate	-1/3030 -3000 to max. Y-Coordinate	-3000
	118	Max. Y-Coordinate	-1/3030 min. Y-Coordinate to 0	0
	131	Material thickness 0 = thin; 1 = thick (> approx.. 4 mm)	0 - 1	0

Group	Parameter	Description	Setting range	Set value
200	201	Thread puller 0= not fitted; 1 = fitted	0 - 1	1
	202	Jig monitoring 0 = not fitted; 1 = RFID; 2 = Barcode	0 - 3	0
	203	Machine type 0 = standard	0	0
	204	Short thread trimmer 0= not fitted; 1 = fitted	0 - 1	0
	205	Monitoring sewing head down (E74) 0= not fitted; 1 = fitted	0 -1	0
	206	Increment correction Motor 1	-30 - +30	10
	207	Increment correction Motor 2	-30 - +30	10
	208	Clamp correction	-10 - +10	0
300	301	NIS (carriage start) [°], see Chap. 13.09.03	80 – 150	80
	302	Take-up lever tdc [°]	70 – 90	75
	303	Position thread trimming on [°]Point, at which the impulse for thread trimming is sent to the thread trimming valve, is changed(° = degree after t.d.c. needle bar).	160 – 360	200
	304	Position thread trimming off [°]	Parameter 302 - 303	345
	305	Thread tension position [°]	5 - 20	15
	306	Thread tension position for short thread trimmer [°]	5 - 25	20
400	401	Thread clamp on [0.01 s] Delay time for opening thread clamp when sewing starts is changed.	10 – 256	15
	402	Thread puller [0.01 s] Duration of thread pulling is changed.	10 – 256	50
	403	Needle cooling [0.01 s] Duration of extra air cooling for needle after sewing stop is changed.	10 – 256	200

Group	Parameter	Description	Setting range	Set value
500	501	Reduced speed	200 - max.	max.
	502	Cutting speed (positioning speed)	50 - 250	200
	503	Speed for slow start stitches	200 - 700	700
	504	Slow start stitches Number of stitches, which are to be sewn at reduced speed when sewing starts, is changed	0 – 99	2

13.09.03 Carriage start (NIS)

This function changes the time for starting the motors of the clamp drive (º = degree after t.d.c. needle bar).

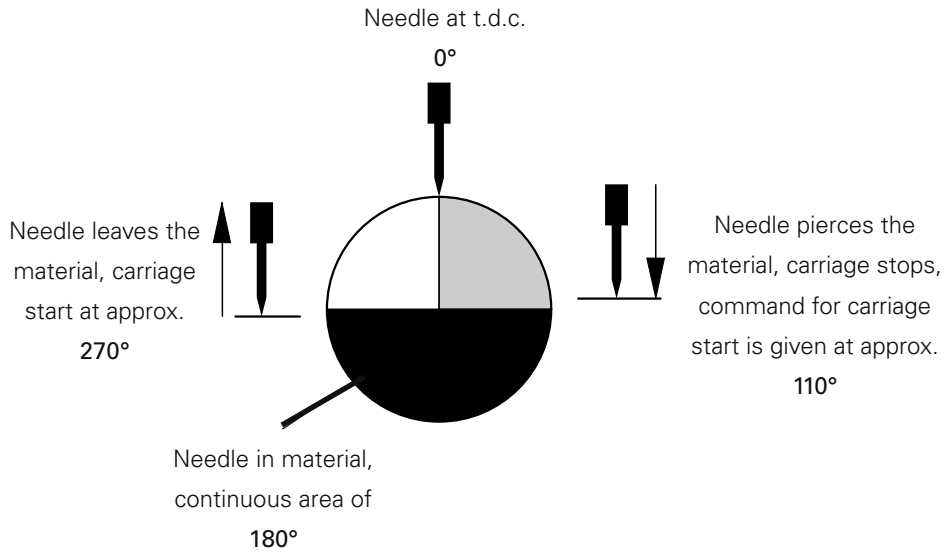

The command for the carriage start is given when the needle pierces the material. The carriage, however, starts half a revolution later (180º), when the needle leaves the material.

Under certain circumstances the stitch formation can be influenced by the setting.

14 Control

14.01 Basic setting / Diagnosis / Pin assignment

14.01.01 Basic control unit A20

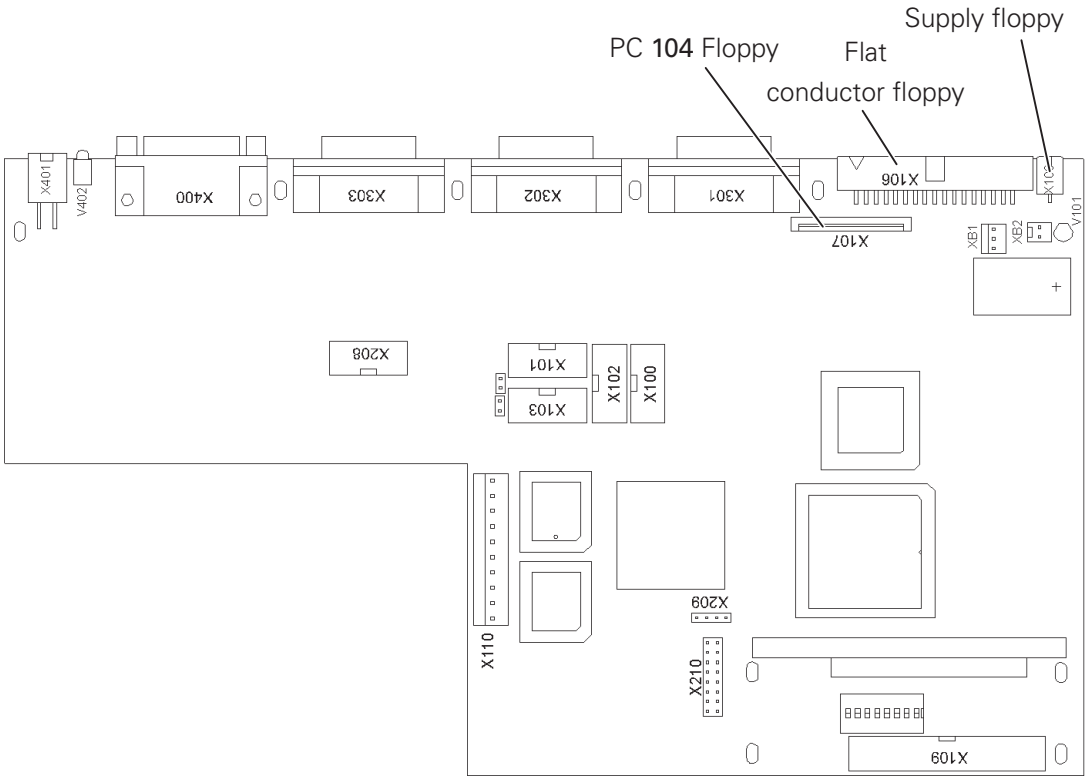

Pin assignment
X103 (COM1)
X101 (COM2)

PIN	Signal	PIN	Signal
1	Vterm1	6	
2	RxD	7	RTS
3	TxD	8	CTS
4		9	Vterm2
5	GND		

X301 (X-axis / motor 1)
X302 (Y-axis / motor 2))

PIN	Signal	PIN	Signal
1	Pulse +	9	Pulse -
2	Direction +	10	Direction -
3	Gate/Enable +	11	Gate/Enable -
4	Current control +	12	Current control -
5	Vex +	13	Vex -
6			
7	Input2 +	14	Input2 -
8	Input1 +	15	Input1 -

X208 (CAN-Bus)

PIN	Signal	PIN	Signal
1	P8HA +	6	
2	P8HA -	7	
3	DoRi +	8	DoRi -
4	GND	9	GND
5			

X400 (main drive)

PIN	Signal	PIN	Signal
1	Screening	14	A_A
2	TxD_A	15	A_B
3	RxD_A	16	B_A
4	TxD_B	17	B_B
5	RxD_B	18	I_A
6		19	I_B
7	GND	20	GND
8		21	A_OC
9	R1_A	22	B_OC
10	R1_B	23	I_OC
11	R2_A	24	V2
12	R2_B	25	GND
13	GND	26	Vex

X401 ((thread monitor)

PIN	Signal	PIN	Signal
1	+U_ULN	2	+U_ULN
3	POUT7	4	POUT8

14.01.02 Sewing drive A22



Before leaving the factory the sewing drive controller is equipped with the necessary operating software. This software may only be replaced by appropriately trained personnel.

The LED "Power on" shows that the unit is ready for operation. Diagnosis functions and fuses are not available. If error messages appear on the machine display, see **Chapter 14.02.04 Sewing motor errors.**

Pin assignment

X1 (Synchronizer)

PIN	Signal	PIN	Signal
1	FA	6	
2	FB	7	
3	SM	8	
4	ADTC1	9	GND
5	+ 5V		

X2 (Commutating signal generator)

PIN	Signal	PIN	Signal
1		6	KA
2		7	KB
3		8	KC
4	ADTC2	9	GND
5	+ 5V		

X 3 (Interface)

PIN	Signal	PIN	Signal
1	GND	14	A
2	TxD	15	A\
3	RxD	16	B
4	TxD\	17	B\
5	RxD\	18	Index
6		19	Index\
7	GND	20	
8		21	
9	REF1	22	
10	REF1\	23	
11	REF2	24	
12	REF2\	25	
13	GND	26	

X6 (Mains)

PIN	Signal
1	PE
2	N
3	L1

X14 (Motor)

PIN	Signal
1	PE
2	U
3	V
4	W

14.02 Description of the error messages

14.02.01 General errors

Display	Description	Reaction
ERROR: 3	Error in allocation EMS memory	Switch off error
ERROR: 4	C167 not reacting	Switch off error
ERROR: 5	Boot file (c167boot.bin) cannot be opened	Switch off error
ERROR: 6	Error in flash-programming	Switch off error
ERROR: 7	Error when opening a file	Switch off error
ERROR: 8	Battery	Dejam
ERROR: 9	Firmware version conflict	Switch off error
ERROR: 10	CAN-error (reset)	Switch off error
ERROR: 11	CAN-error (no. of nodes)	Switch off error
ERROR: 12	Communication main drive	Switch off error
ERROR: 13	CAN node feed attached, feed not configured	Switch off error
ERROR: 14	CAN node for feed missing	Switch off error
ERROR: OPERATING DATA CHECK SUM (COLD START CARRIED OUT)	Operating data check sum	Cold start
NEW OPERATING SOFTWARE (COLD START CARRIED OUT)	New operating software	Cold start
COLD START CARRIED OUT	Cold start	Cold start
ERROR: 101	C167-error	Switch off error
ERROR: 102 (#node no.)(status)	CAN-error, status = Bit1 - node inactive, Bit 8 - short circuit	Switch off error
ERROR: 103	End stage (SmX)	Dejam
ERROR: 104	End stage (SmY)	Dejam
ERROR: 105	Error compressed air	Dejam
ERROR: 201 (#sewing motor error)	Sewing motor error (see Chapter 14.02.04 Sewing motor errors)	Dejam
ERROR: 202 (#RFID-ERROR)	Error while reading transponder	Dejam
ERROR: 210 (#No.))	Command byte of NM-interface not free,command could not be given	Dejam
ERROR: 211	Coordinates outside the sewing area	Dejam

Display	Description	Reaction
ERROR: 212	Stitch length too long (>6 mm)	Dejam
ERROR: 213	Carraige initiators not found	Dejam
ERROR: 214	Jig not inserted or incorrectly inserted	Dejam
ERROR: 215	Ramp not completed	Dejam
ERROR: 216	Thread not cut (Jig cannot be opened)	Dejam
ERROR: 217	No jig inserted, program number could not be read	Dejam
ERROR: 218	Invalid program number	Dejam
ERROR: 219	Wrong jig	Dejam
ERROR: 220	Incorrect jig code	Dejam
ERROR: 221	No carriage start (NIS)	Dejam
ERROR: 222	Scan template code with barcode scanner	Dejam
		Dejam
ERROR: 240 (cause)	Move to starting point blocked	Dejam
ERROR: 241 (cause)	Move to Home blocked	Dejam
ERROR: 242 (cause)	Move to feeder hand-over position blocked	Dejam
ERROR: 243 (cause)	Move from seam end to feeder take-over position blocked	Dejam
ERROR: 244 (cause)	Move to machine zero point blocked	Dejam
ERROR: 245 (cause)	Moving in sewing program blocked	Dejam
ERROR: 246 (cause)	Tacting blocked	Dejam
ERROR: 247 (cause)	Move to feeder take-over position blocked, during threding	Dejam
		Dejam
ERROR: 301	Carriage position invalid	Dejam
		Dejam
ERROR: 305	Configuration invalid	Dejam
ERROR: 306	Needle position (t.d.c.) invalid	Dejam
ERROR: 307	Feeder engaged -> switch-off	Dejam
ERROR: 308	Machine not in basic position	Dejam
ERROR: 309	Jig monitoring unit not fitted	Dejam
ERROR: 310	File not on source	Dejam
ERROR: 311	Source reading error, file cannot be opened	Dejam
ERROR: 312	Target writing error, file cannot be opened	Dejam
ERROR: 313	Source reading error	Dejam
ERROR: 314	Target writing error	Dejam
ERROR: 315	File configuration cannot be opened	Dejam
ERROR: 316	Error when opening MDAT-file	Dejam
ERROR: 317	Writing error in MDAT-file	Dejam

Display	Description	Reaction
ERROR: 318	Machine data identification incorrect	Dejam
ERROR: 319	Reading error in MDAT-file	Dejam
ERROR: 320	Prog. with incorrect machine class	Dejam
ERROR: 321	Prog. with incorrect machine version	Dejam
ERROR: 322	Prog. with incorrect data set version	Dejam
ERROR: 323	Incorrect program number	Dejam
ERROR: 324	No carriage start, NIS	Dejam
ERROR: 325	Memory overflow when writing file to flash	Dejam
ERROR: 326	Flash writing error	Dejam
ERROR: 327	Image leaves sewing error	Dejam
ERROR: 328	Block not marked or incorrectly marked	Dejam
ERROR: 329	Program too large	Dejam
ERROR: 330 (#Stitch generation error) (#Section number)	Conversion error	Dejam
ERROR: 331	Stitch too large	Dejam
ERROR: 332	Check-point not permitted	Dejam
ERROR: 341 (#sewing motor error)	Sewing motor error, (see Chapter 14.02.04 Sewing motor errors)	Dejam
ERROR: 342 (# program number)	Program incomplete	Dejam
ERROR: 343 (# program number)	Program too large	Dejam
ERROR: 344 (# program number)	Program does not exist	Dejam
ERROR: 345 (# program number)	Flash reading error or program defective	Dejam
ERROR: 346 (#RFID-ERROR)	Transponder read/write error	Dejam
ERROR: 347 (#Program number)	Program with wrong machine class	Dejam
ERROR: 401	Text file cannot be opened	Switch off error
ERROR: 402	Error when reading text file	Switch off error
ERROR: 403	Error in allocation of storage space for texts	Switch off error
ERROR: 501	Error when opening file "pikto.hex" or "vorlagen.hex"	Switch off error
ERROR: 502	No acknowledgement from control panel	Switch off error

14.02.02 CAN-errors

Error byte	Description
bit7	End stage error (short circuit)
bit6	-
bit5	-
bit4	Receive status (waiting for input object)
bit3	Transmit status (transmit output object)
bit2	Transmit status
bit1	Node time out
bit0	Node active

14.02.03 Stitch generation error

Display	Description
1	Incorrect machine identification
2	Section "jig code" or section "obstacle" missing or on wrong place
3	Increment too large
4	Program end without thread trimming
5	Impermissible stitch length data
6	Incorrect element in geometrical data set
7	Quick motion although machine is sewing
8	Impermissible stitch length data
9	Impermissible stitch length data
10	Circle check-point = circle end point
11	Division by zero
12	Impermissible stitch length data
13	No coordinates section before curve check-point
14	Sewing area limit exceeded
15	Curve without end point
16	Mach. function buffer overflow
17	Start sewing command in loading point program
18	Incorrect curve check-point
19	Incorrect curve check-point
20	Incorrect curve check-point
21	Incorrect curve check-point
22	Stitch length not initialised
23	Loading point program not ended
24	Stitch width command in loading point program
25	Impermissible value for section stitch??
26	Cutting command, although thread cut
27	Start sewing command, although machine sewing

Display	Description
28	Cutting command in sewing-off-area
29	Sewing-off command, although thread cut
30	Cutting command directly after start sewing command
31	Start bartack too long

14.02.04 Sewing motor errors

Display	Description
1	Transmission error
2	Timeout serial interface
3	Check sum error in incoming data
4	Timeout command
30h (48)	Timeout-slave expired (command string incomplete)
31h (49)	Incorrect command code
32h (50)	Framing or parity error
33h (51)	Check sum incorrect
34h (52)	Incorrect date request
35h (53)	No parameter programmable (motor operation)
36h (54)	Parameter does not exist
37h (55)	Incorrect parameter value
38h (56)	EEPROM being programmed
39h (57)	Incorrect machine speed
3Ah (58)	Incorrect position
3Bh: (59)	Path for guided positioning too short
3Ch: (60)	Reset of position counter not possible (motor running)
3Dh: (61)	Turning to tdc after mains on not permitted
3Eh: (62)	System mark not recognised
3Fh: (63)	Target position < **3** incr. away from count position
40h - 4Fh -	
50h: (80)	Network control (failure of **2** network half waves)
51h: (81)	Error power electronics during initialization
52h: (82)	Short circuit in motor
53h: (83)	Mains voltage off recognized
54h: (84)	Error power electronics in operation
55h: (85)	No increments
56h: (86)	Motor blocked
57h: (87)	Commutation transmitter connector missing
58h: (88)	Increment transmitter connector missing
59h: (89)	Fault in motor running (target speed not reached)
5Ah: (90)	-
5Bh: (91)	Regulating algorithm blocked
5Ch - 69h -	
6Ah: (106)	EEPROM not programmable

Display	Description
6Bh: (107)	EEPROM missing
6Ch: (108)	Master reset carried out
6Dh: (109)	-
6Eh: (110)	Residual path for path-controlled, guided delay ramp too short
6Fh: (111)	Slave has received 5 successive garbled messages
70h: (112)	Time-out over
71h - FFh -	

14.02.05 RFID error

Display	Description
0:	no error
1:	Com port hardware error
2:	RFID Reader protocol checksum incorrect (transmission error)
3:	RFID Reader frame receive timeout (reader unresponsive)
4:	RFID Reader received unexpected RFID response frame
5:	incorrect RFID transponder found (no Mifare Ultralight)
6:	machine class string does not match transponder class string, e.g.: machine class string = "3590-1/3030" Transponder class string = "3590-2/5030"
7:	Read/write error for card persists after five attempts (probably no card in field)
8:	Transponder user data checksum incorrect

14.03 List of outputs and inputs

14.03.01 CAN-nodes 1

Output	Term	Function	Remark
OUT1	Y1	Vibrating presser down	Valve
OUT2	Y2U1	Raise sewing head	Impulse valve
OUT3	Y2U2	Lower sewing head	Impulse valve
OUT4	Y3	Blower needle cooling on	Valve
OUT5	Y4	2nd level vibrating presser on(prog. output 5)	Valve
OUT6	Y5	Thread puller on (optional)	Valve
OUT7	Y6	Secondary thread tension on	Valve
OUT8	Y7	Thread trimmer on	Valve
OUT9	Y8	Bobbin cover open	Valve
OUT10	Y9	Balance wheel brake off	Valve
OUT11	Y10	Thread clamp open	Valve
OUT12	Y11U1	Clamp open	Impulse valve

Output	Term	Function	Remark
OUT13	Y11U2	Clamp closed	Impulse valve
OUT14	Y12	Hook lubrication on	Valve
OUT15	K20	Thread tension open	Solenoid
OUT16	bobres	Reset bobbin thread monitor	Dig. signal

Input	Term	Function
IN1	IN1	Prog. input **1**
IN2	IN2	Prog. input **2**
IN3	IN3	Prog. input **3**
IN4	IN4	Prog. input **4**
IN5	e1	Vibrating presser up
IN6	e2u1	Sewing head raised
IN7	e2u2	Sewing head lowered
IN8	e8	Bobbin cover closed
IN9	e30	Clamp inserted right
IN10	e31	Clamp inserted left
IN11	-	Small vibrating presser lift
IN12	ac_ok	Undervoltage monitoring
IN13	press	Compressed air ok
IN14	fkey	Key (for secured functions)
IN15	foot1	Foot-switch **1st** stage
IN16	foot2	Foot switch **2nd** stage

14.03.02 CAN-nodes 2

Output	Term	Function	Remark
OUT1	Out1	Prog. output **1** (bobbin thread slide)	Dig. Signal
OUT2	Out2	Prog. output **2**	Dig. Signal
OUT3	Out3	Prog. output **3**	Dig. Signal
OUT4	Out4	Prog. output **4**	Dig. Signal
OUT5	-	-	-
OUT6	-	-	-
OUT7	-	-	-
OUT8	-	-	-
OUT9	-	-	-
OUT10	-	-	-
OUT11	-	-	-
OUT12	-	-	-
OUT13	-	-	-

Output	Term	Function	Remark
OUT14	-	-	-
OUT15	-	-	-
OUT16	-	-	-

Input	Term	Function
IN1	therr	Needle thread error
IN2	boberr	Bobbin thread error
IN3	sm1limit	Zero position SM1
IN4	sm2limit	Zero position SM2
IN5	e34	Counter presser down
IN6	e35	Temperature monitor (operated ok)
IN7	-	-
IN8	-	-
IN9	-	-
IN10	-	-
IN11	-	-
IN12	-	-
IN13	-	-
IN14	-	-
IN15	-	-
IN16	-	-

14.03.03 Special outputs

Term	Function	Remark
S1	Thread puller function	
S2	Thread clamp function	

14.04 Boot key

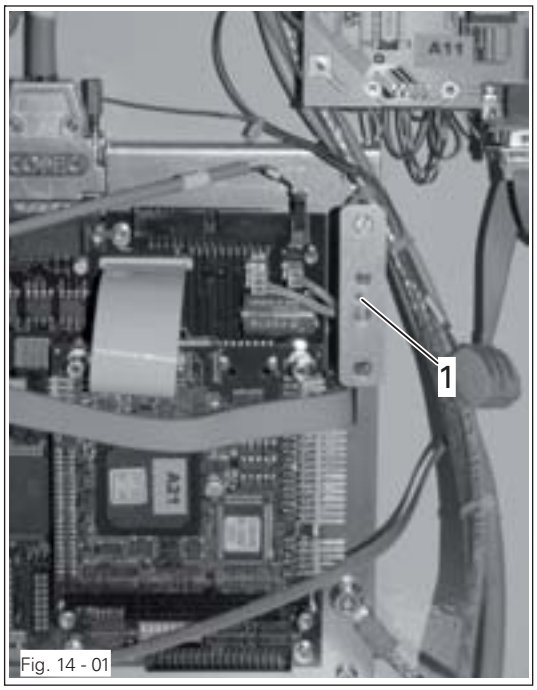

Fig. 14 - 01

This work may only be carried out by properly instructed personnel!
Do not touch any live parts!
Danger to life through electric voltage!

15 Pneumatics-switch diagram

The control elements and valves are in the machine's basic position. Main switch -ON, compressed air -ON

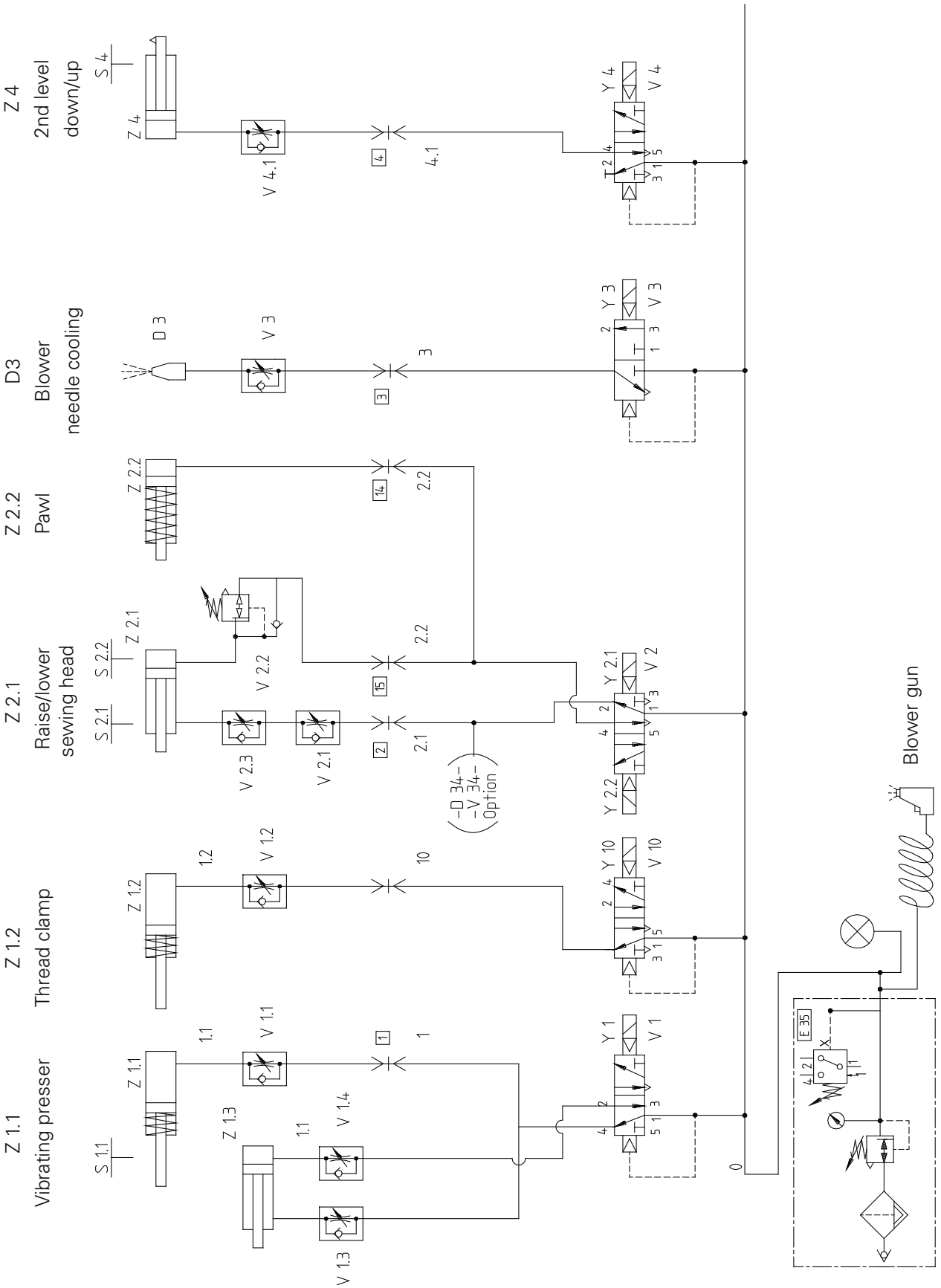

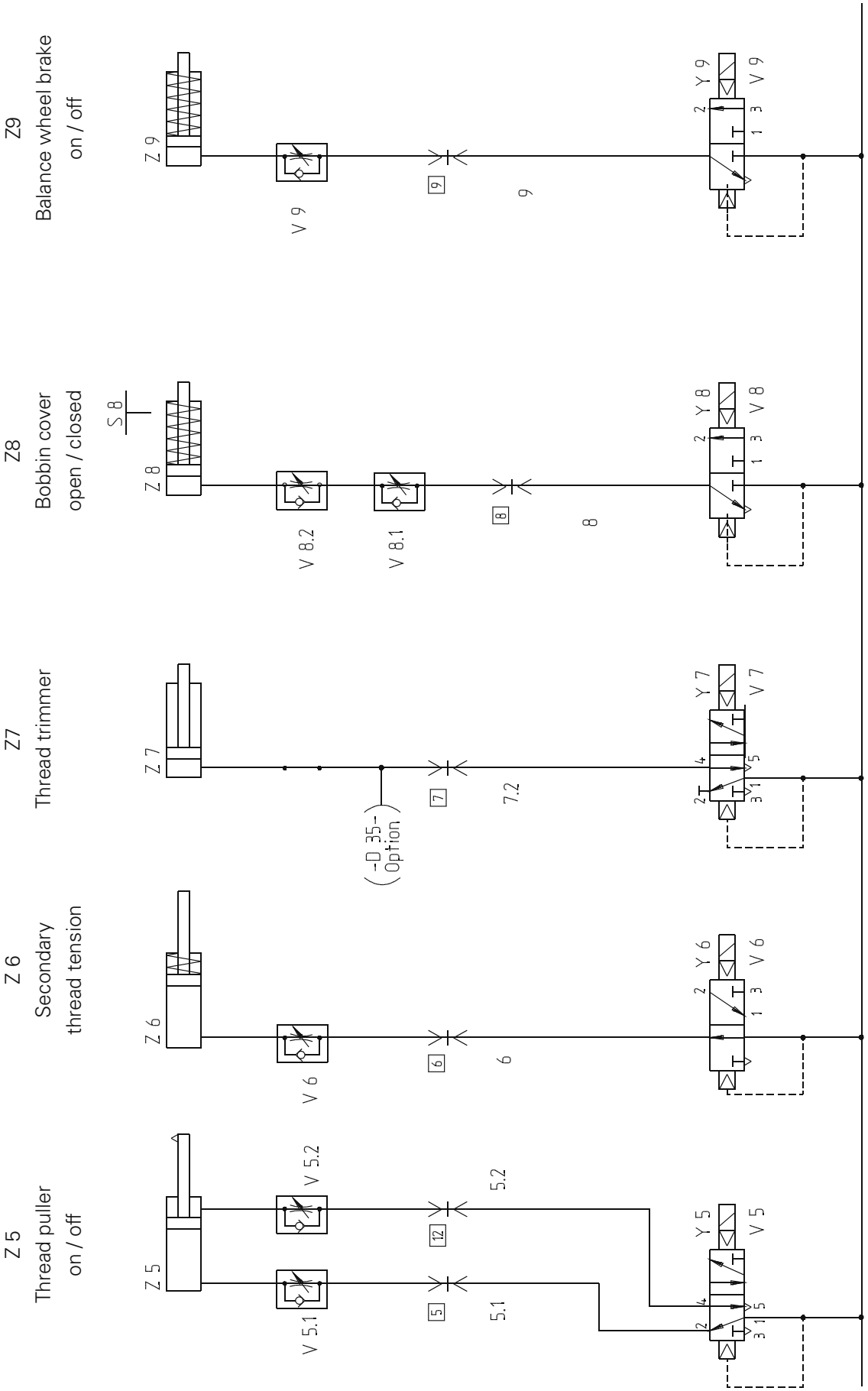
Z9
Balance wheel brake
on / off
Z 9
V 9
9
Y 9
V 9
Z8
Bobbin cover
open / closed
S 8
Z 8
V 8.2
V 8.1
8
Y 8
V 8
Z7
Thread trimmer
Z 7
(-D 35-
Option)
7
7.2
Y 7
V 7
Z 6
Secondary
thread tension
Z 6
V 6
6
Y 6
V 6
Z 5
Thread puller
on / off
Z 5
V 5.2
V 5.1
12
5
5.2
5.1
Y 5
V 5

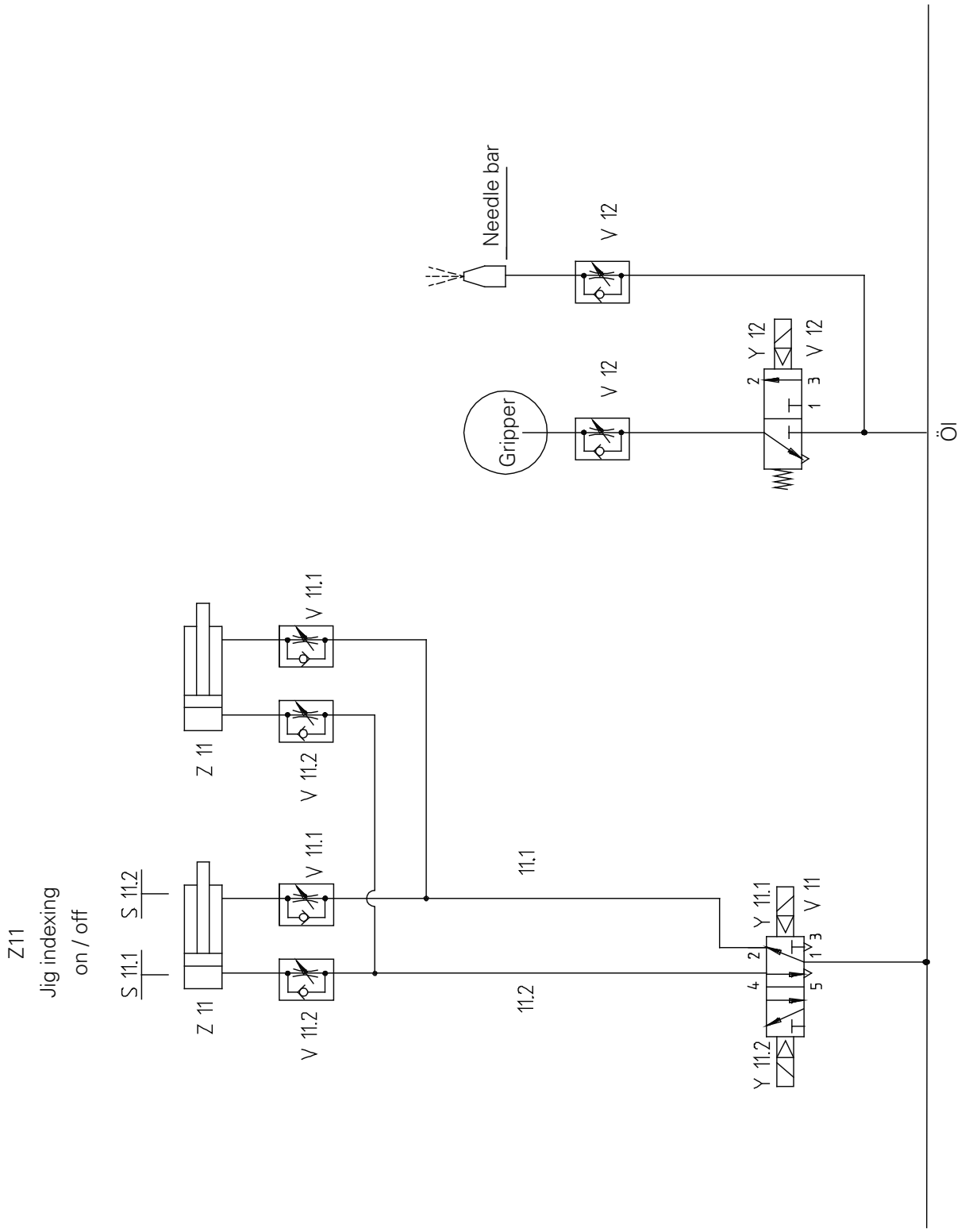
Needle bar
V 12
Gripper
V 12
Y 12
V 12
2
1
3
ÖI
Z11
Jig indexing
on / off
S 11.2
S 11.1
Z 11
V 11.1
V 11.2
Z 11
V 11.1
V 11.2
11.1
11.2
Y 11.1
V 11
Y 11.2
2
1
3
4
5

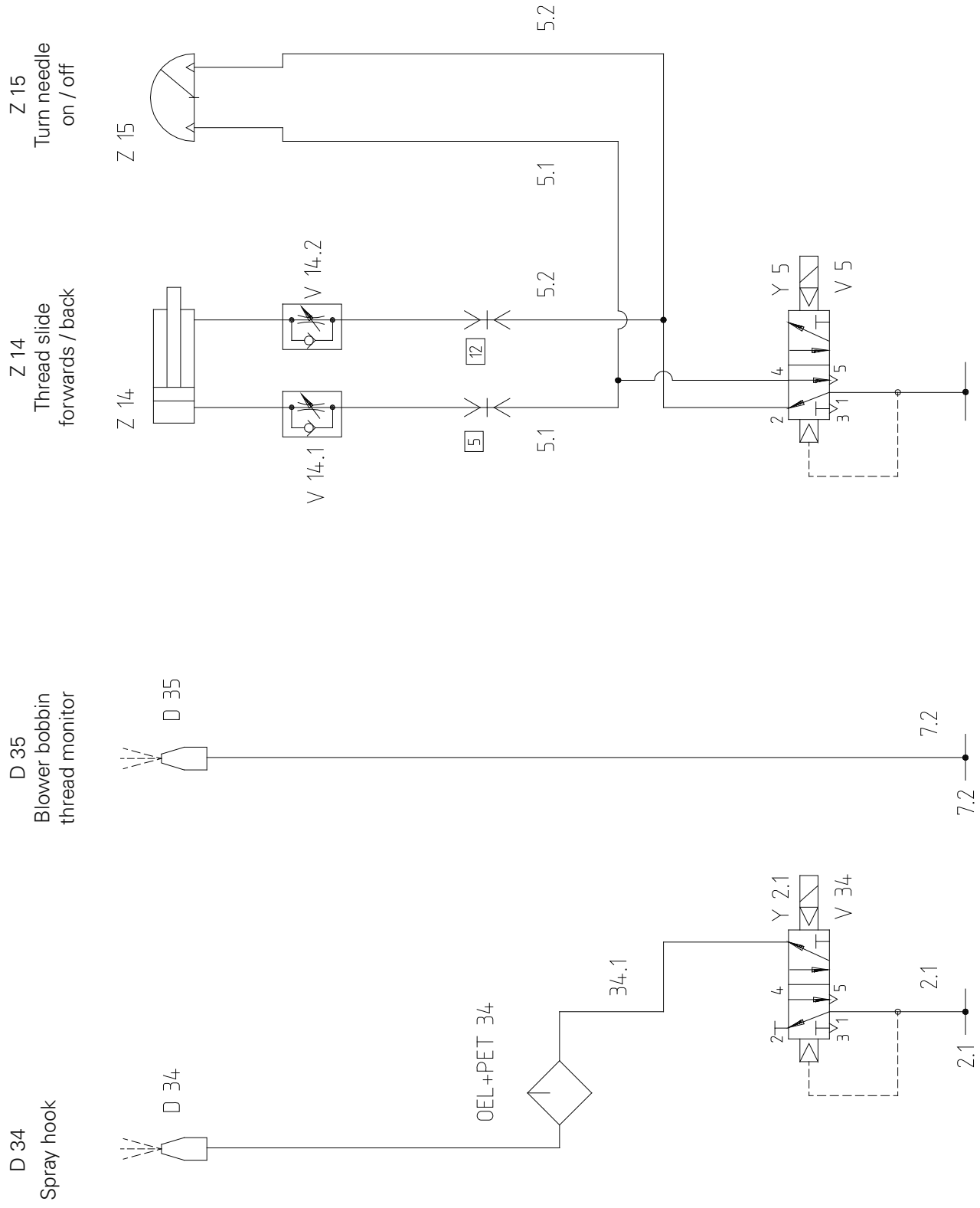
Z 15
Turn needle on / off
Z 15
5.2
5.1
Z 14
Thread slide forwards / back
Z 14
V 14.2
V 14.1
12
5
5.2
5.1
Y 5
V 5
4
2
5
1
3
D 35
Blower bobbin thread monitor
D 35
7.2
7.2
D 34
Spray hook
D 34
OEL+PET 34
34.1
Y 2.1
V 34
4
2
5
1
3
2.1
2.1

16 Circuit diagrams

Reference list for circuit diagrams **91-191 542-95**

A11	CAN 1 S200 =>1
A12	CAN 2 S200 =>2
A20	Control device BS3
A22	Sewing motor control Q200
A24	Needle thread monitor evaluation
A25	Needle thread monitor optic
A26	Control panel BDF-T1
A28	Bobbin thread monitor evaluation
A29	Bobbin thread monitor optic
A30	Power supply BS3 160VA
A42	Step motor power amplifier SM1 B6 Rotary switch motor current, setting **7** = **4.1**A
A43	Step motor power amplifier SM2 B4 Rotary switch motor current, setting D = **2.3**A
	Description of LEDs (**A42** + **A43**) **1** DC bus live **2** Operational, power amplifier authorised, motor live **3** Short circuit between 2 motor phases or against protective earth **4** Static = excessive power amplifier temperature, blinking = excessive motor temperature **5** Overvoltage (DC bus > 420VDC) **6** Undervoltage (DC bus > 180VDC) **7** Error message on rotation monitoring **8** Encoder connected and operational **5+6** Power amplifier deactivated, motor currentless **3 - 6** Frequency too high at signal point
A75	RFID clamp recognition
B2u1	A11 CAN1 e2u1 sewing head lifted
B2u2	A11 CAN1 e2u2 sewing head lowered
B8	A11 CAN1 e8 bobbin cover locked
B30	A11 CAN1 e30 clamp inserted right
B31	A11 CAN1 e31 clamp inserted left
A24	A12 CAN2 e1 top thread error
A28	A12 CAN2 e2 bobbin thread error
B3	A12 CAN2 zero position SM1
B4	A12 CAN2 zero position SM2
B5	A12 CAN2 e34 material presser bottom
B6	A12 CAN2 e35 ttemperature controller
F1	Circuit breaker 16A
F2	Circuit breaker 16A
F1	A30 power supply fuse 2.0A
F2	A30 power supply fuse 6.3A
F3	A30 power supply fuse 1.2A

F4	A30 power supply fuse 0.5A
F9	H11 sewing lamp fuse 0.5A
H1	A30 LED, D4 24V => F1-2A
H2	A30 LED, D5 5V => F3-1.2A
H3	A22 LED, Power =>
H11	Sewing lamp
K54	A11 CAN1 ac-ok voltage monitoring (optional)
K20	A11 CAN1 thread tension on
M1	sewing motor
M2	Step motor X axis SM1
M3	Step motor Y axis SM2
Q1	Main switch
S01	A11 CAN1 e1 foot jumper top
S1	A11 CAN1 foot1 treadle switch 1 stage (optional)
S2	A11 CAN1 foot2 treadle switch 2 stage (optional)
S33	A11 CAN1 e32 reduced speed
T1	Transformer 160VA A30 power supply
A11 X200	CAN1 bus selection (dip 2 S200)
A11 X300	Outputs OUT 1 – OUT 15
A11 X400	Inputs IN 1 – IN 16
A12 X200	CAN2 bus selection (dip 3 S200)
A12 X300	Outputs OUT 1 – OUT 15
A12 X400	Inputs IN 1 – IN 16
A20 X101	COM 2 interface
A20 X103	COM 1 interface
A20 X208	CAN – bus
A20 X301	X – axis / motor SM 1 (M2)
A20 X302	Y – axis / motor SM 2 (M3)
A20 X400	main drive sewing motor M1
A20 X401	Stop motion device
A22 X1	Position transmitter
A22 X2	Sewing motor M1
A22 X3	Interface
A22 X6	Power 230 V AC
A22 X14	Sewing motor M1

A30 X1	Power supply fan
A30 X2	BS3 power supply
A30 X3	+ 24 V and 0 V
A30 X4	+ 24 V and 0 V
A30 X5	+ 24 V and 0 V
A30 X6	Secondary transformer
A30 X9	Primary transformer 230 V AC
A30 X10	Power 230 V AC
A42 XC1	Power 230V AC SM1 power amplifier
A42 XC1	Step motor SM1 power amplifier
A42 XC2	Axis 1 selection
A43 XC1	Power 230V AC SM2 power amplifier
A43 XC1	Step motor SM2 power amplifier
A43 XC2	Axis 2 selection
XW1	main terminal strip230V AC, and 24V DC
X30	Wall socket 230V AC / 10A
X31	Wall socket 230V AC / 10A sewing lamp
X32	Power supply A32 Laser 230V AC
X34	Power supply A32 Laser 3.5V / XA
X33	Power supply AXX Puls +24V / 5A / 125VA
X38	Treadle switch connector
X40	PC connection RS 232 - interface
X41	A26 control panel BDF-P1
X42	A26 control panel BDF-P1 power supply
X43	A26 control panel BDF-P1 signal connection
X44	Rotor position sensor M1 sewing motor
X45	Position transmitter
X50	Central plug sewing head
X61	Sewing motor M1
X62	Step motor SM1 X axis M2
X63	Step motor SM2 Y axis M3
X75	RFID clamp recognition (optional)
X100	Valve block central plug (Festo)
Y1	A11 CAN1 foot jumper down
Y2u1	A11 CAN1 lift sewing head
Y2u2	A11 CAN1 lower sewing head
Y3	A11 CAN1 needle cooling blower ON
Y4	A11 CAN1 2. foot jumper level ON
Y5	A11 CAN1 snag ON
Y6	A11 CAN1 add-on thread tension ON
Y7	A11 CAN1 thread cutting ON
Y8	A11 CAN1 bobbin cover ON
Y9	A11 CAN1 handwheel brake open

Y10	A11 CAN1 thread clamp open
Y11u1	A11 CAN1 clamp open
Y11u2	A11 CAN1 clamp closed
Y12	A11 CAN1 clamp lubrication ON
Z1	Dejam filter (10VSK 1)

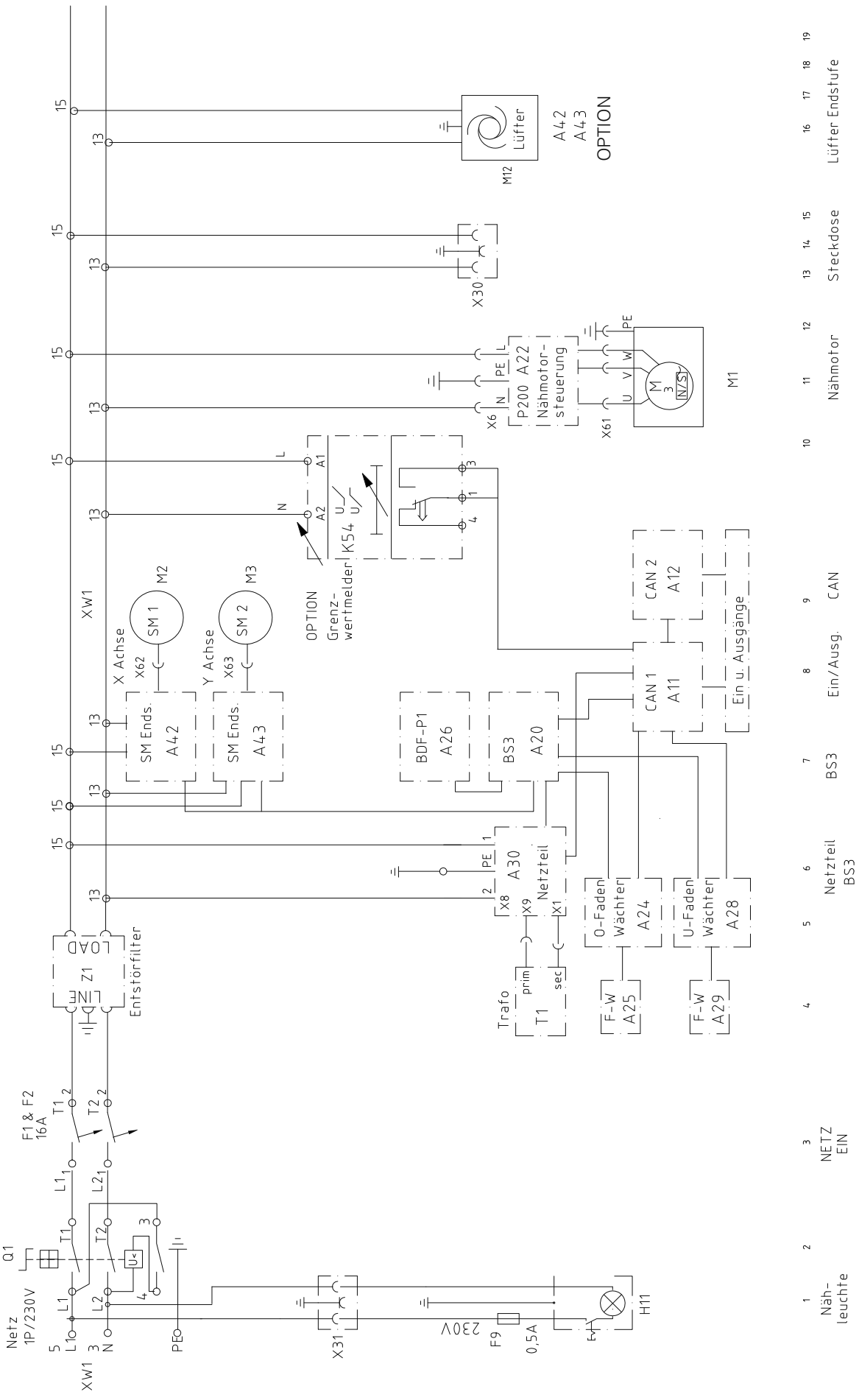
Lüfter
A42
A43
OPTION
M12
X30
P200 A22
Nähmotor-
steuerung
X6
X61
M1
K54
OPTION
Grenz-
wertmelder
SM 1
SM 2
M2
M3
X Achse
X62
Y Achse
X63
SM Ends.
A42
SM Ends.
A43
BDF-P1
A26
BS3
A20
CAN 2
A12
CAN 1
A11
Ein u. Ausgänge
A30
Netzteil
O-Faden
Wächter
A24
U-Faden
Wächter
A28
Trafo
T1
prim
sec
F-W
A25
F-W
A29
LOAD
LINE
Z1
Entstörfilter
F1 & F2
16A
Q1
Netz
1P/230V
XW1
X31
230V
F9
0,5A
H11
Lüfter Endstufe
Steckdose
Nähmotor
CAN
Ein/Ausg.
BS3
Netzteil
BS3
NETZ
EIN
Näh-
leuchte

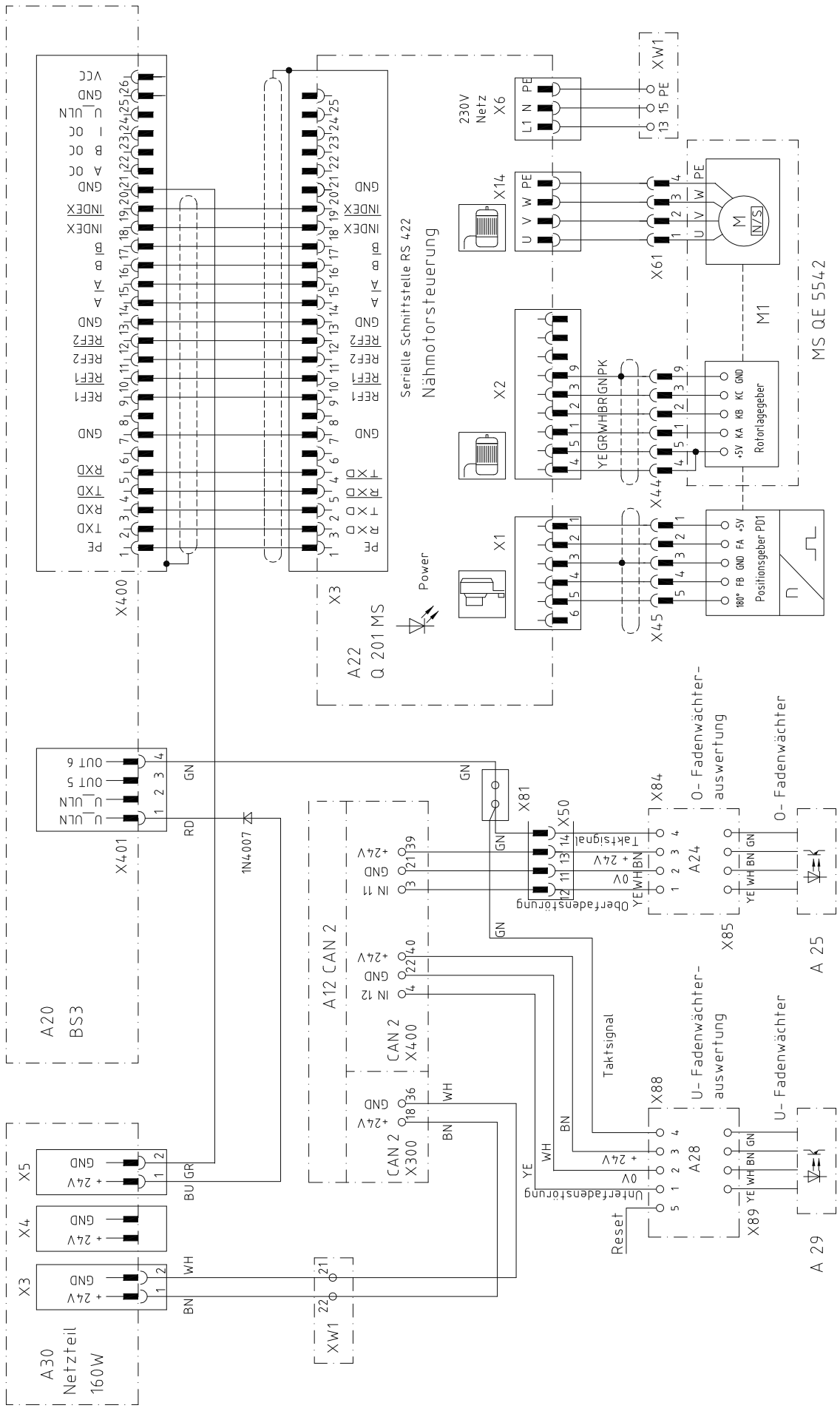
A20
BS3
X400
X401
A22
Q 201 MS
X3
Serielle Schnittstelle RS 422
Nähmotorsteuerung
Power
230V
Netz
X6
X14
X2
X1
X61
X44
X45
XW1
M1
MS QE 5542
Rotorlagegeber
Positionsgeber PD1
1N4007
A12 CAN 2
CAN 2
X400
CAN 2
X300
X81
X50
Taktsignal
Oberfadenstörung
X84
A24
X85
O- Fadenwächter-
auswertung
O- Fadenwächter
A 25
Taktsignal
X88
A28
X89
U- Fadenwächter-
auswertung
U- Fadenwächter
A 29
Unterfadenstörung
Reset
X5
X4
X3
A30
Netzteil
160W
XW1

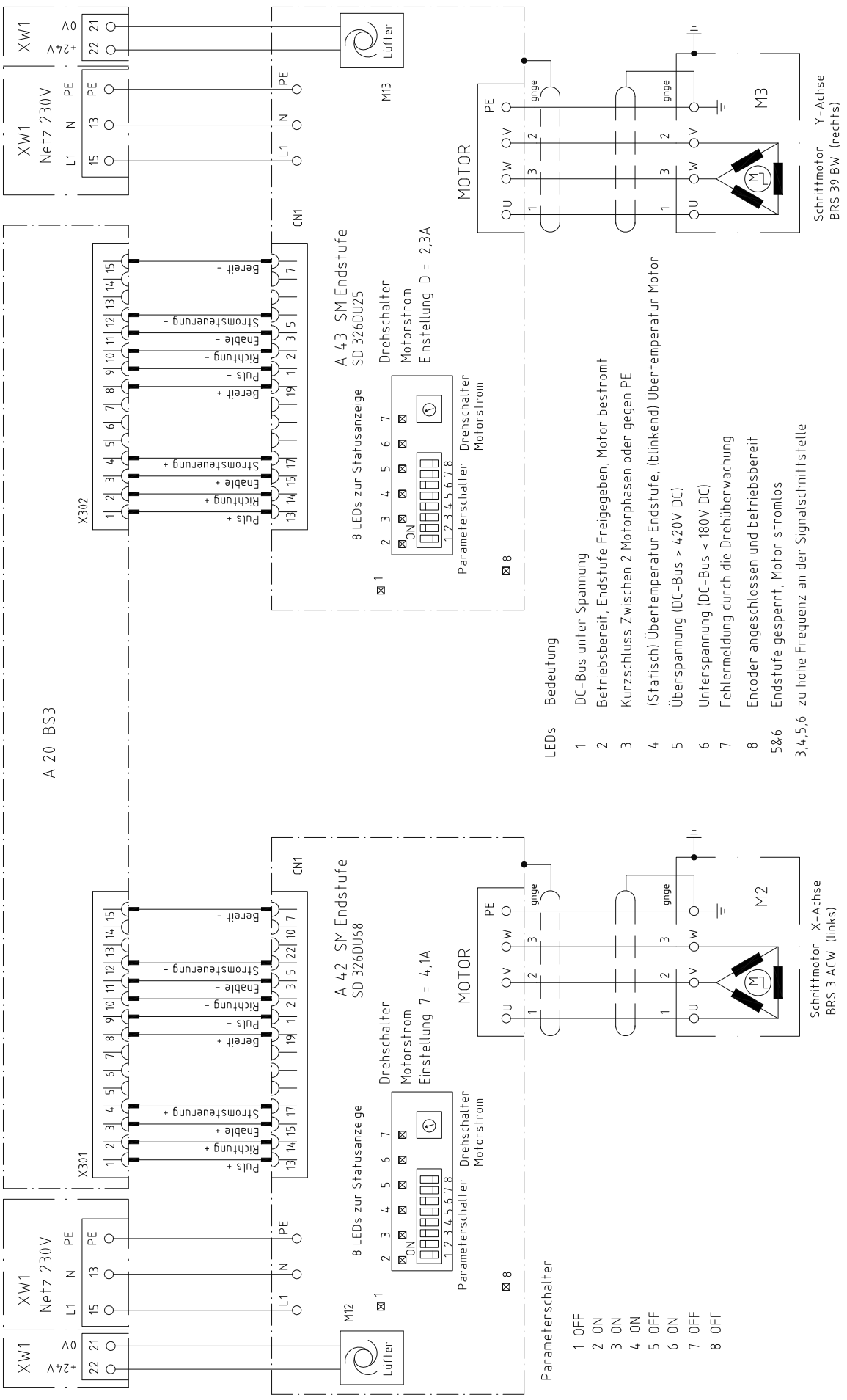
A 20 BS3
XW1
Netz 230V
L1 N PE
+24V
0V
Lüfter
M12
M13
X301
X302
CN1
A 42 SM Endstufe
SD 326DU68
A 43 SM Endstufe
SD 326DU25
8 LEDs zur Statusanzeige
Drehschalter
Motorstrom
Einstellung 7 = 4,1A
Einstellung D = 2,3A
Parameterschalter
Drehschalter
Motorstrom
MOTOR
PE
U V W
gnge
M2
M3
Schrittmotor X-Achse
BRS 3 ACW (links)
Schrittmotor Y-Achse
BRS 39 BW (rechts)
Puls +
Richtung +
Enable +
Strom-steuerung +
Puls -
Richtung -
Enable -
Strom-steuerung -
Bereit +
Bereit -
LEDs Bedeutung
1 DC-Bus unter Spannung
2 Betriebsbereit, Endstufe Freigegeben, Motor bestromt
3 Kurzschluss Zwischen 2 Motorphasen oder gegen PE
4 (Statisch) Übertemperatur Endstufe, (blinkend) Übertemperatur Motor
5 Überspannung (DC-Bus > 420V DC)
6 Unterspannung (DC-Bus < 180V DC)
7 Fehlermeldung durch die Drehüberwachung
8 Encoder angeschlossen und betriebsbereit
5&6 Endstufe gesperrt, Motor stromlos
3,4,5,6 zu hohe Frequenz an der Signalschnittstelle
Parameterschalter
1 OFF
2 ON
3 ON
4 ON
5 OFF
6 ON
7 OFF
8 OFF

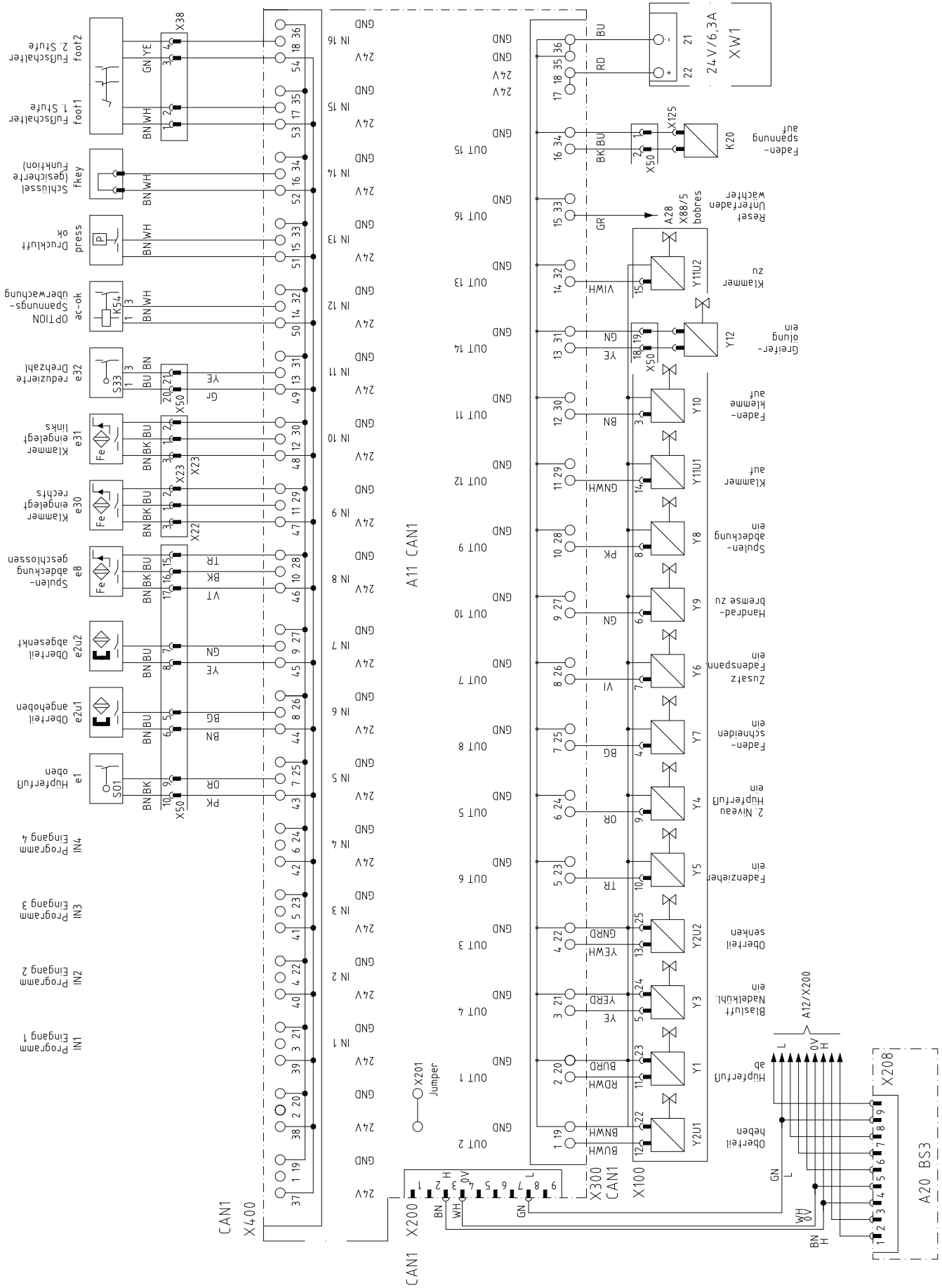

Fußschalter 2. Stufe
foot2
Fußschalter 1. Stufe
foot1
Schlüssel (gesicherte Funktion)
fkey
Druckluft ok
press
OPTION Spannungs-überwachung
ac-ok
reduzierte Drehzahl
e32
Klammer eingelegt links
e31
Klammer eingelegt rechts
e30
Spulen-abdeckung geschlossen
e8
Oberteil abgesenkt
e2u2
Oberteil angehoben
e2u1
Hüpferfuß oben
e1
Programm Eingang 4
IN4
Programm Eingang 3
IN3
Programm Eingang 2
IN2
Programm Eingang 1
IN1
CAN1
X400
A11 CAN1
X201
Jumper
X200
CAN1
X300
CAN1
X100
24V/6,3A
XW1
Faden-spannung auf
K20
Reset Unterfaden wächter
A28
X88/5
bobres
Klammer zu
Greifer-öling ein
Faden-klemme auf
Klammer auf
Spulen-abdeckung ein
Handrad-bremse zu
Zusatz Fadenspann ein
Faden-schneiden ein
2. Niveau Hüpferfuß ein
Fadenzieher ein
Oberteil senken
Blasluft Nadelkühl. ein
Hüpferfuß ab
Oberteil heben
A12/X200
X208
A20 BS3

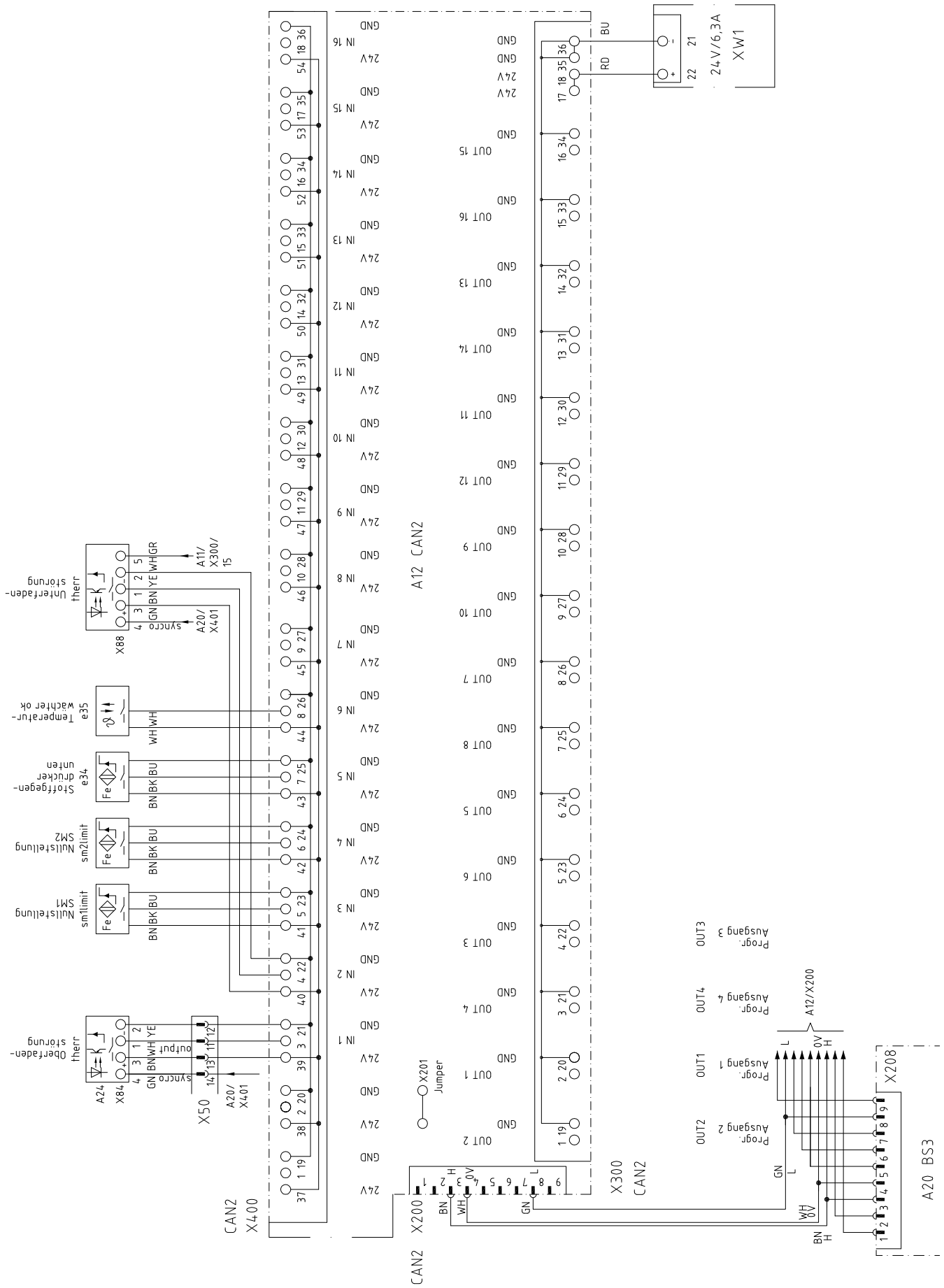

24V/6,3A
XW1
A12 CAN2
X300
CAN2
X200
CAN2
X400
CAN2
X208
A20 BS3
X201
Jumper
X50
X88
X84
A24
A11/
X300/
15
A20/
X401
Unterfaden-
störung
therr
Temperatur-
wächter ok
e35
Stoffgegen-
drücker
unten
e34
Nullstellung
SM2
sm2limit
Nullstellung
SM1
sm1limit
Oberfaden-
störung
Progr.
Ausgang 1
Progr.
Ausgang 2
Progr.
Ausgang 3
Progr.
Ausgang 4
A12/X200

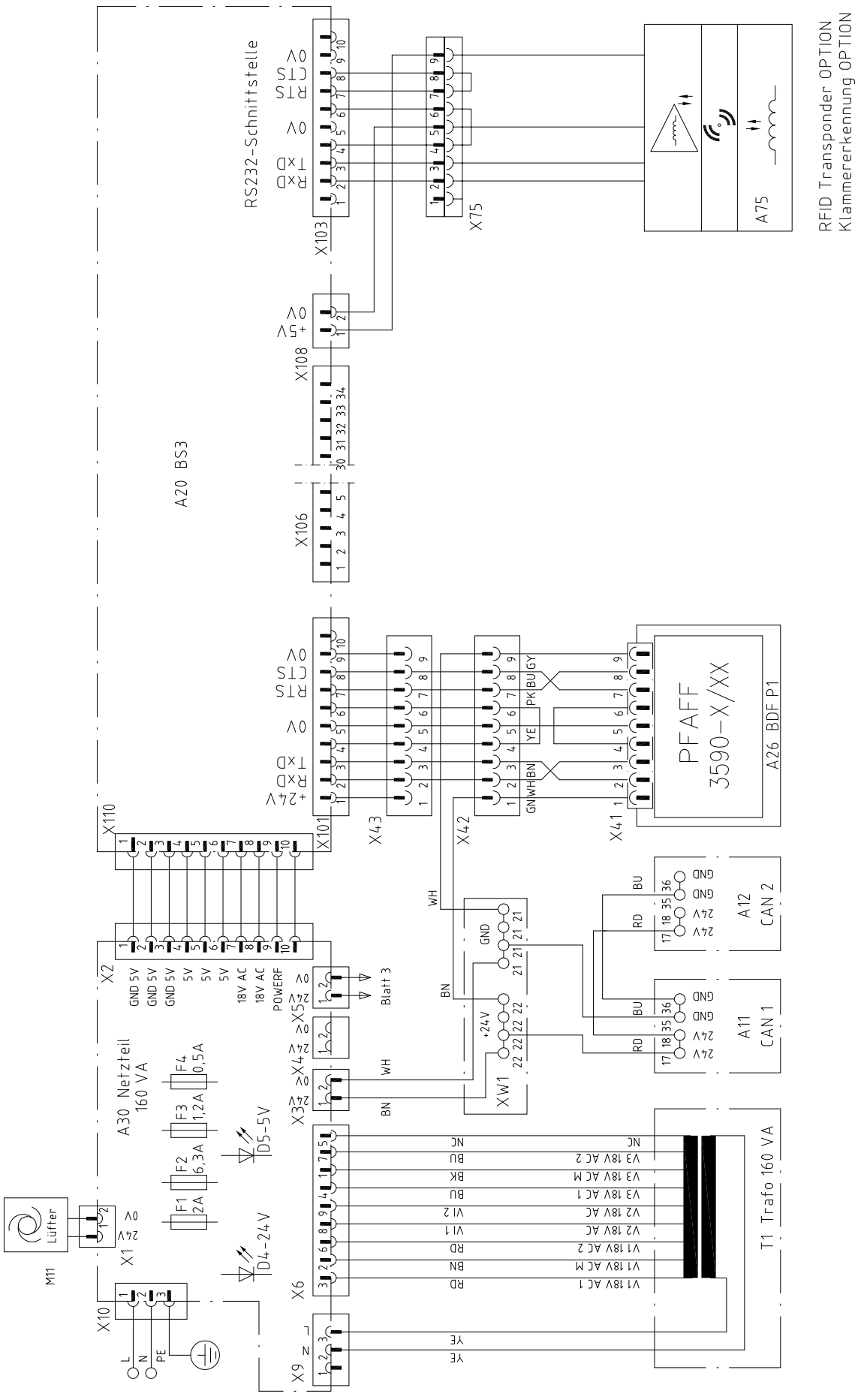
RS232-Schnittstelle
A20 BS3
A30 Netzteil 160 VA
T1 Trafo 160 VA
PFAFF 3590-X/XX
A26 BDF P1
A75
RFID Transponder OPTION
Klammererkennung OPTION
A12 CAN 2
A11 CAN 1
Lüfter
M11
F1 2A
F2 6,3A
F3 1,2A
F4 0,5A
D4-24V
D5-5V
Blatt 3
X1
X2
X3
X4
X5
X6
X9
X10
X41
X42
X43
X75
X101
X103
X106
X108
X110
XW1

PFAFF® Industrial



Europäische Union
Wachstum durch Innovation – EFRE



PFAFF Industriesysteme
und Maschinen AG

Hans-Geiger-Str. 12 - IG Nord
D-67661 Kaiserslautern

Telefon: +49-6301 3205 - 0
Telefax: +49-6301 3205 - 1386
E-mail: info@pfaff-industrial.com

Hotlines:
Technischer Service: +49-175/2243-101
Nähtechnik/Fachberatung: +49-175/2243-102
Ersatzteile-Hotline: +49-175/2243-103

Gedruckt in der BRD

© PFAFF Industriesysteme und Maschinen AG 2009, PFAFF is the exclusive trademark of VSM Group AB.PFAFF Industriesysteme und Maschinen AG is an authorized licensee of the PFAFF trademark.