PFAFF® Industrial

POWERLine

3741
3745

DOKU-SEAM-SYSTEM

296-12-19 008/002
Betriebsanleitung engl. 06.12

The reprinting, copying or translation of PFAFF Instruction Manuals, whether in whole or in part, is only permitted with our previous authorization and with written reference to the source.

PFAFF Industriesysteme
und Maschinen AG

Hans-Geiger-Str. 12 - IG Nord
D-67661 Kaiserslautern

Contents ..... Page

Register 01

1	**Safety**	**7**
1.01	Directives	7
1.02	General notes on safety	7
1.03	Safety symbols	8
1.04	Important points for the user	8
1.05	Operating and specialist personnel	9
1.05.01	Operating personnel	9
1.05.02	Specialist personnel	9
1.06	Danger warnings	10

Register 02

2	**Input**	**14**
2.01	General information	14
2.02	Overview of the functions	15
2.03	Description of the functions	16
2.03.01	Overlapping functions	16
2.03.02	Operating modes	17
2.03.03	Tools	17
2.04	Creating seam programs	18
2.04.01	Sewing parameter input	22
2.04.02	Input of action at beginning of seam sector	23
2.04.03	Input of end of seam sector	24
2.04.04	Input of action at end of seam sector	25
2.04.05	Thread force	27
2.05	Service	29
2.06	Cold start	30
2.07	Users – rights	31
2.08	Backup – restore	33
2.09	Label-editor	35
2.10	Defining options and interfaces	37

Register 03

3	**Betriebsanleitung**	**39**
3.01	Proper use	40
3.02	Specifications	41
3.03	Disposal of Machine	42
3.04	Transportation, packing and storage	43
3.04.01	Transportation to customer's premises	43

Contents ..... Page

3.04.02	Transportation inside the customer's premises	43
3.04.03	Disposal of packing materials	43
3.04.04	Storage	43
3.05	Explanation of symbols	44
3.06	Controls	45
3.06.01	On/off switch / Sewing lamp switch	45
3.06.02	Power bar	45
3.06.03	Keyboard on machine head	46
3.06.04	Pedal	48
3.06.05	Lever for lifting the presser foot	48
3.06.06	Knee switch (optional)	49
3.06.07	Bobbin thread supply monitor	49
3.06.08	Adjustment of the stand height (optional)	50
3.06.09	Touch-screen monitor	50
3.06.10	Label-printer	51
3.06.11	Hand-held scanner	51
3.06.12	PC	51
3.07	Setting up	52
3.07.01	Log-in	52
3.07.02	Language selection	52
3.07.03	Inserting the needle	53
3.07.04	Winding the bobbin thread, regulating the winder tension (PFAFF 3741+ 3745 PLUS)	54
3.07.05	Winding the bobbin thread, regulating the winder tension (PFAFF 3745 PREMIUM)	55
3.07.06	Bobbin-changing/threading, and regulating the bobbin thread tension	56
3.07.07	Threading the needle thread (PFAFF 3741 PLUS + 3745 PLUS)	57
3.07.08	Threading the needle thread (PFAFF 3745 PREMIUM)	58
3.08	Sewing	59
3.08.01	Calling up / carry out the sewing operation (without camera for bobbin thread monitor)	59
3.08.02	Calling up / carry out the sewing operation (with camera for bobbin thread monitor)	60
3.08.03	Regulating the needle thread tension (PFAFF 3741 + 3745 PLUS)	62
3.08.04	Regulating the needle thread tension (PFAFF 3745 PREMIUM)	64
3.08.05	Description of the functions	66
3.08.06	Concluding the sewing operation	68
3.09	Care and maintenance	69
3.09.01	Servicing and maintenance intervals	69
3.09.02	Cleaning the machine	69
3.09.03	Lubricating	70
3.09.04	Checking/regulating the air pressure	71
3.09.05	Emptying/cleaning the water bowl of the air filter/regulator	71
3.10	Wearing parts	72

Contents ..... Page

Register 04

4	**Adjustment**	**76**
4.01	Notes on adjustment	76
4.02	Tools, gauges and other accessories for adjusting	76
4.03	Abbreviations	76
4.04	Explanation of the symbols	76
4.05	Adjusting the basic machine	77
4.05.01	Basic position of the balance wheel (adjustment aid)	77
4.05.02	Zero position of the bottom and needle feed	78
4.05.03	Feed dog motion of bottom feed dog and needle feed	79
4.05.04	Feeding motion of the bottom feed dog	80
4.05.05	Height of the bottom feed dog	81
4.05.06	Feeding stroke difference	82
4.05.07	Preliminary adjustment of the needle height	83
4.05.08	Needle rise, hook clearance, needle height and bobbin case position finger	84
4.05.09	Bobbin case opener	85
4.05.10	Bobbin winder	86
4.05.11	Thread check spring and thread regulator	87
4.05.12	Sewing foot pressure	88
4.05.13	Lubrication	89
4.05.14	Reengaging the slip clutch	90
4.06	Adjusting the thread trimmer -900/81	91
4.06.01	Resting position of the roller lever / radial position of the control cam	91
4.06.02	Position and height of the thread catcher	92
4.06.03	Knife pressure	93
4.06.04	Bobbin thread clamp spring	94
4.06.05	Manual cutting test	95
4.07	Setup	96
4.07.01	Set reference position	96
4.07.02	Stitch length adjustment	97
4.07.03	Commissioning the scanner	98
4.07.04	Commissioning the camera	99
4.07.05	Adjustment of edge guide photocell	102
4.08	Parameter settings	103
4.08.01	Selecting and altering the parameters	103
4.08.02	Parameter list	104
4.09	Description of the error messages	112
4.10	Inputs / Outputs	113
4.11	Pin assignment	114
4.12	Importend Sevice-information	117

Contents ..... Page

Register 05

5	**Calibration**	**120**
5.01	General information	120
5.01.01	Calibration	120
5.01.02	Traceability	120
5.01.03	Standards	120
5.01.04	Gauging office, German Calibration Office DKD	121
5.02	Calibration procedure	121
5.02.01	Check / adjust the needle reference position	121
5.02.02	Check / adjust the trigger signals	122
5.02.03	Check the zero position of the monitor power signal	123
5.02.04	Checking the setting of the sewing head	124
5.02.05	Recording the characteristic thread strength curve	124
5.03	Checking the calibration (calibration result)	127

Register 06

6	**Circuit diagrams**	**129**
6.01	Pneumatics-switch diagram PFAFF 3741 + 3745	**129**
6.02	Block diagram PFAFF 3741 + 3745 (with control unit P374 ED)	130
6.03	Circuit diagrams	**132**

1 Safety

1.01 Directives

This machine is constructed in accordance with the European regulations contained in the conformity and manufacturer's declarations.
In addition to this Instruction Manual, also observe all generally accepted, statutory and other regulations and legal requirements and all valid environmental protection regulations! The regionally valid regulations of the social insurance society for occupational accidents or other supervisory organizations are to be strictly adhered to!

1.02 General notes on safety

- This machine may only be operated by adequately trained operators and only after having completely read and understood the Instruction Manual!
- All Notes on Safety and Instruction Manuals of the motor manufacturer are to be read before operating the machine!
- The danger and safety instructions on the machine itself are to be followed!
- This machine may only be used for the purpose for which it is intended and may not be operated without its safety devices. All safety regulations relevant to its operation are to be adhered to.
- When exchanging sewing tools (e.g. needle, roller presser, needle plate and bobbin), when threading the machine, when leaving the machine unattended and during maintenance work, the machine is to be separated from the power supply by switching off the On/Off switch or by removing the plug from the mains!
- Everyday maintenance work is only to be carried out by appropriately trained personnel!
- Repairs and special maintenance work may only be carried out by qualified service staff or appropriately trained personnel!
- Work on electrical equipment may only be carried out by appropriately trained personnel!
- Work is not permitted on parts and equipment which are connected to the power supply! The only exceptions to this rule are found in the regulations EN 50110.
- Modifications and alterations to the machine may only be carried out under observance of all the relevant safety regulations!
- Only spare parts which have been approved by us are to be used for repairs! We expressly point out that any replacement parts or accessories which are not supplied by us have not been tested and approved by us. The installation and/or use of any such products can lead to negative changes in the structural characteristics of the machine. We are not liable for any damage which may be caused by non-original parts.

1.03 Safety symbols



Danger!

Points to be observed..



Danger of injury for operating and specialist personnel!



Caution

Do not operate without finger guard and safety devices.

Before threading, changing bobbin and needle, cleaning etc. **switch off main switch.**

1.04 Important points for the user

- This Instruction Manual is an integral part of the machine and must be available to the operating personnel at all times.
- The Instruction Manual must be read before operating the machine for the first time.
- The operating and specialist personnel is to be instructed as to the safety equipment of the machine and regarding safe work methods.
- It is the duty of the user to only operate the machine in perfect running order.
- It is the obligation of the user to ensure that none of the safety mechanisms are removed or deactivated.
- It is the obligation of the user to ensure that only authorized persons operate and work on the machine.

Further information can be obtained from your PFAFF agent.

1.05 Operating and specialist personnel

1.05.01 Operating personnel

Operating personnel are persons responsible for the equipping, operating and cleaning of the machine as well as for taking care of problems arising in the sewing area.

The operating personnel is required to observe the following points and must:

- always observe the Notes on Safety in the Instruction Manual!
- never use any working methods which could adversely affect the safety of the machine!
- not wear loose-fitting clothing or jewelery such as chains or rings!
- also ensure that only authorized persons have access to the potentially dangerous area around the machine!
- always immediately report to the person responsible any changes in the machine which may limit its safety!

1.05.02 Specialist personnel

Specialist personnel are persons with a specialist education in the fields of electrics, electronics and mechanics. They are responsible for the lubrication, maintenance, repair and adjustment of the machine.

The specialist personnel is obliged to observe the following points and must:

- always observe the Notes on Safety in the Instruction Manual!
- switch off the On/Off switch before carrying out adjustments or repairs, and ensure that it cannot be switched on again unintentionally!
- wait until the luminous diode on the control box is no longer blinking or on before beginning adjustment or repair work.
- never work on parts which are still connected to the power supply! Exceptions are explained in the regulations EN 50110.
- replace the protective coverings and close the electrical control box afer all repairs or maintenance work!

1.06 Danger warnings



A working area of **1 m** must be kept free both in front of and behind the machine, so that easy access is possible at all times.



Never put your hands or fingers in the sewing area during sewing!
Danger of injury by the needle!



While setting or adjusting the machine do not leave any objects on the table nor in the needle plate area! Objects may be trapped or flung out of the machine!

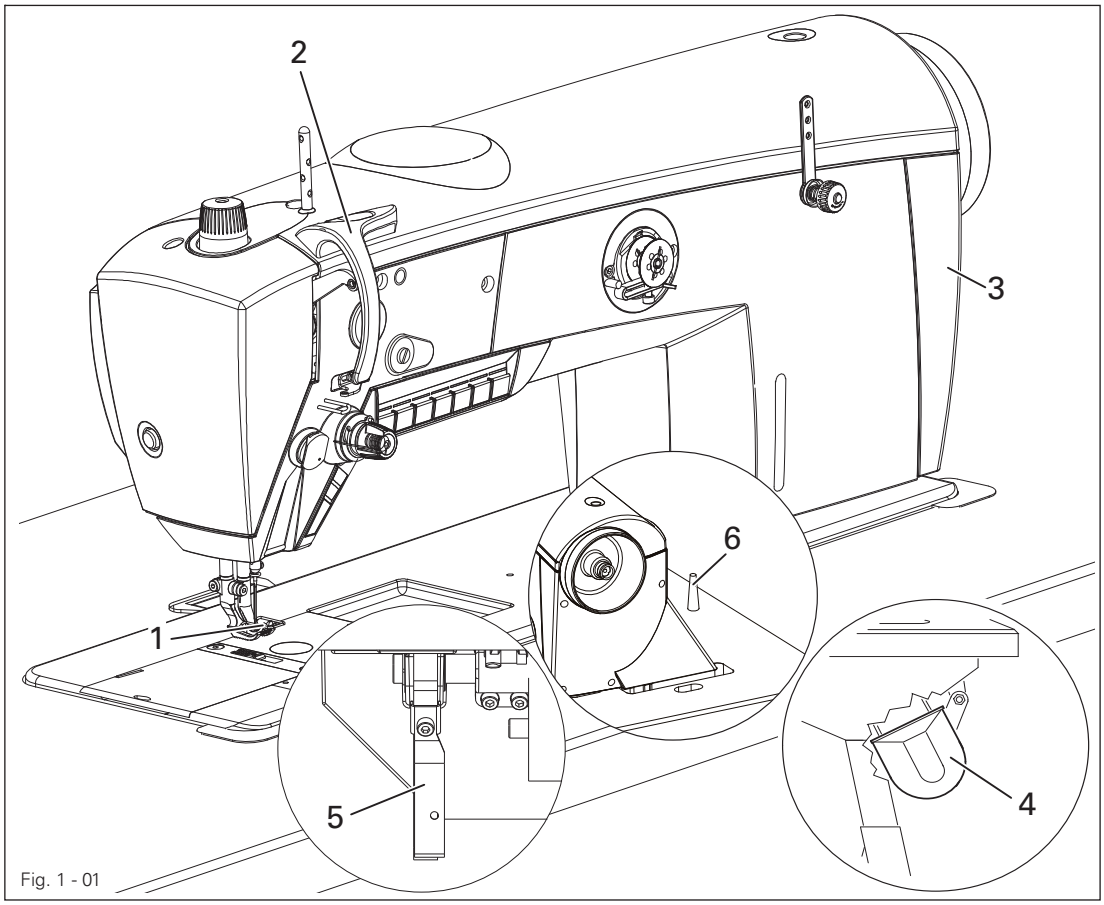

Fig. 1 - 01



Do not run the machine without finger guard **1**!
Danger of injury by up and down movement of needle!



Do not run the machine without take-up lever guard **2**!
Danger of injury by moving take-up lever!



Do not run the machine without belt guards **3** and **4**!
Danger of injury by rotating v-belt!



Do not operate the machine without tilt lock **5**!
Danger of crushing between sewing head and table!



Do not operate the machine without support **6**! Danger due to top-heavy sewing head! Machine can tip over backwards when tilted!

PFAFF Industrial PFAFF Industriesysteme und Maschinen AG, 67661 Kaiserslautern

Declaration of acknowledgement of the documentation for the PFAFF-DOKU-SEAM-SYSTEM

Customer:.....

Address:.....

Machine: PFAFF 3741 ..... Serial-Nr.: .....

Machine: PFAFF 3745 ..... Serial-Nr.: .....

PC-software: ..... Control software:.....

Each person working on the PFAFF-DOKU-SEAM-SYSTEM must be familiar with and understand the contents of these technical documents. The operating and qualified personnel must be appropriately authorised to handle the machine, i.e. qualified and instructed. The operator promises to train his personnel accordingly. Furthermore the user have to take care, to calibrate the machine, when the control-box or the thread-force-sensor was changed.

We hereby confirm that we have read and understood the documentation for the PFAFF-DOKU-SEAM-SYSTEM, and that in addition to the advice in the documentation, we will also follow the local safety and accident prevention regulations.

Place:..... Date:.....

Operator:.....

Register 02

PFAFF® Industrial

POWERLine

3741
3745

SHORT INSTRUCTIONS FOR THE INPUT

This instruction manual applies to machines from software version **1.8** and serial number **2 763 625** onwards

Kurzanleitung zur Eingabe engl. 06.12

2 Input

2.01 General information

The effective pull of the needle thread (needle thread tension) is determined during sewing for each stitch by means of a sensor installed in the needle thread path of the sewing machine.
In the process, through a special measuring principle, measuring errors, caused for example by fluctuating temperatures, can be ruled out.
The signals are evaluated on the PC and displayed on the touch-screen monitor on a user interface for Windows ® XP. The analysis of these signals gives information about the machine setting and the quality of each individual stitch sewn.
The seam sector for which the system is to be activated (docu-seam sector) is determined either by a sensor, by knee switch, with a pre-selected seam length or by stitch counting.
The docu-seam system compares the established thread pull with the previously entered limit values and issues an evaluation of the seam on the touch-screen monitor. If the seam is a good seam, an appropriate signal is given to the PC interface and a label can be printed, which can then be attached to indicate the appropriate quality of the seam. The label can be designed individually with an editor.

The docu-seam system also activates a missed stitch recognition function and, depending on how it is set, reacts to following types of error:

- missed stitch,
- needle thread breakage, end of needle thread
- bobbin thread breakage, end of bobbin thread
- broken needle
- deviations from edge guide

The use of specified materials can be ensured and documented through the prompt to enter appropriate codes (e.g. scanning of barcodes for thread spindle, material, bobbin).

All inputs, for separate user groups, can be carried out directly over the user interface of the touch screen monitor. Several languages are available for the user interface. All data entered and established can be processed on standard databases and spreadsheets.

2.02 Overview of the functions

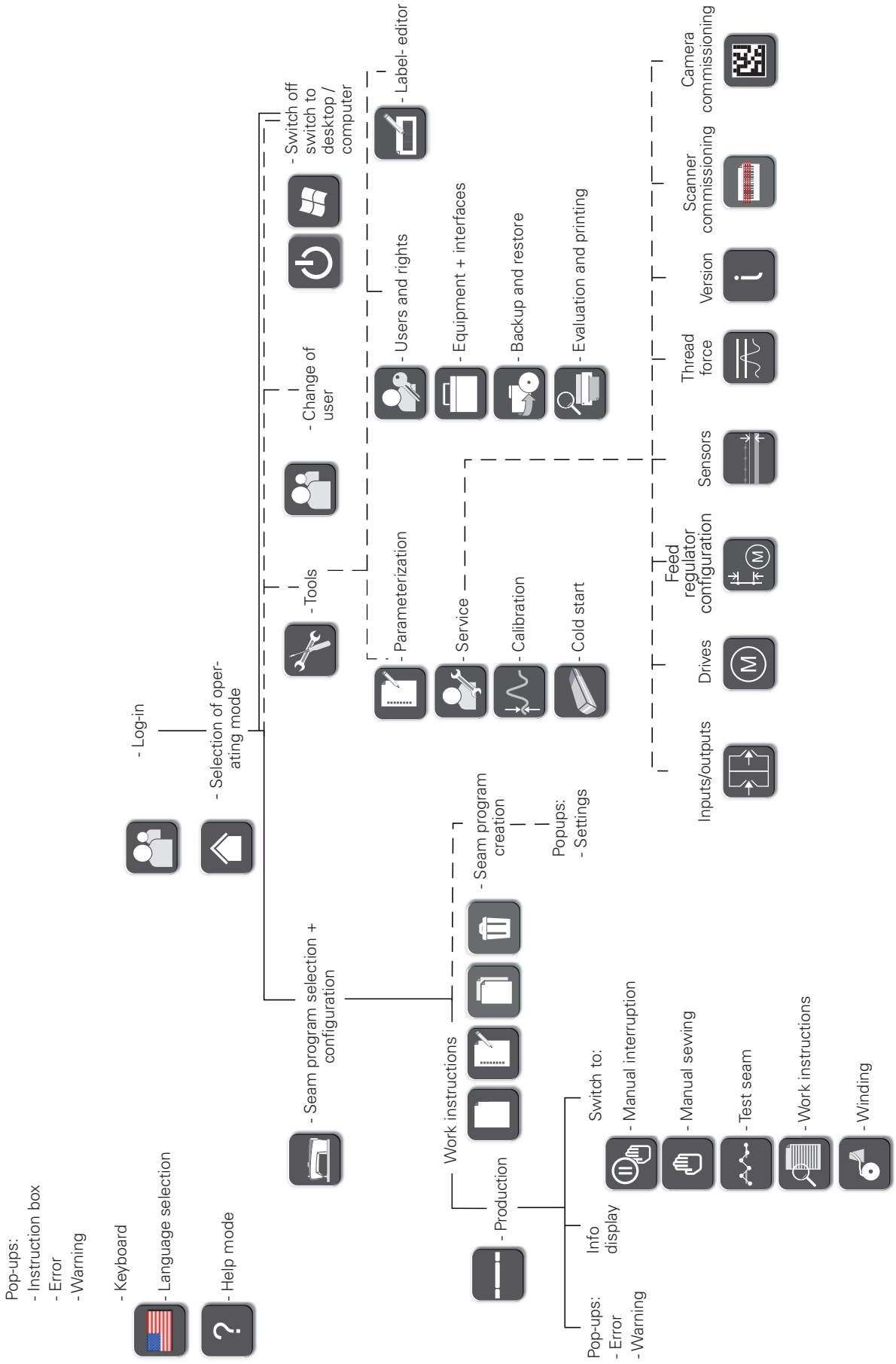

2.03 Description of the functions



Each function is selected by tapping the appropriate symbols on the touch-screen monitor.

2.03.01 Overlapping functions



Mode selection
The menu for selecting the operating mode is called up, see Chapter **2.03.02 Operating modes.**



Choice of language
A menu for selecting the language setting is opened, see Chapter **8 Setting up in the Instruction Manual.**



Help mode
After calling up the help mode, the next function selected is described.



Online help
After activation of the help module, the online help can be called up, including language and document selection.



Confirm
The selection is confirmed, entered or altered values are saved.



Stop
The selection process is cancelled, entered or altered values are not saved.



Back
The superordinate level is selected.



Drag and Drop
With this function it is possible to move the window to any position.



Work order
With this function, a previously created work order can be displayed.

2.03.02 Operating modes



Selecting and configuring seam programs
Functions for selecting, processing and creating seam programs are called up, see Chapter **2.04 Creating seam programs.**



Tools
A menu is called up for selecting functions for the sewing head, control unit and printer.



Change of user
The box for entering the user is called up.



Desktop
The application is concluded and the Windows desktop is called up. This function is only displayed for the logged-in administrator or supervisor.



Shut down the computer
The application is concluded and the computer is shut down. This function is only displayed for the logged-in operator or guest.

2.03.03 Tools



Parameterization
A menu is called up for adjusting the parameters, see Adjustment Manual.



Service
The service menu is called up, see Chapter **2.05 Service**.



Calibration
A menu is called up for calibrating the machine, see Calibration Instructions.



Cold start
A cold start is carried out, see Chapter **2.06 Cold Start**.



Users – Rights
A menu is called up for entering users and rights, see Chapter **2.07 Users – Rights**.



Equipment and Interfaces
A menu is opened for allocating work aids to corresponding COM-interfaces, see **Chapter 2.10 Defining options and interfaces.**



Backup and Restore
A menu is called up for carrying out a backup or a restoration, see Chapter **2.08 Back-up – Restore.**



Evaluation and print function
A selected docu-seam with all relevant values is displayed.



Label editor
A menu is called up for editing labels, see Chapter **2.09 Label editor**.

2.04 Creating seam programs

- Log-in as supervisor.



- Call up the seam program selection function.

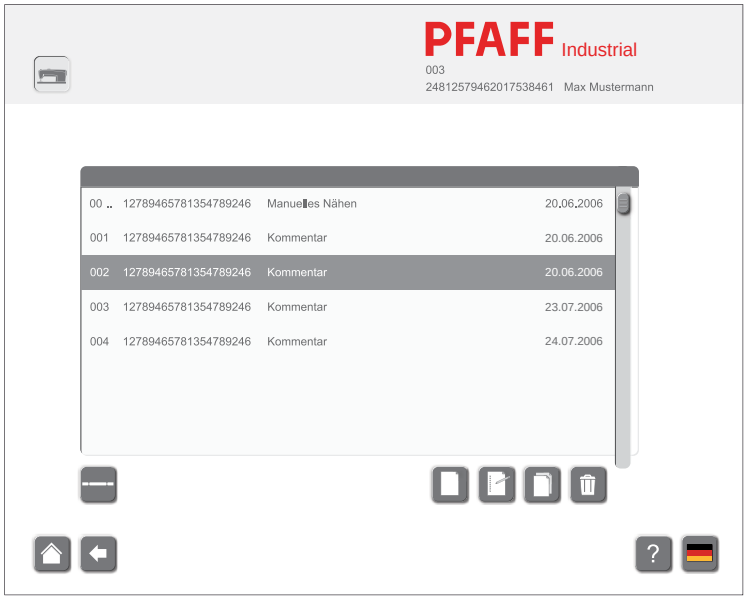

There are several possibilities of how to create a seam program.

- Select a seam program from the list.



- Edit an existing seam program.

or

- Select a seam program from the list.



- Copy a seam program to create a new seam program on the basis of an existing one.

or



- Create a new seam program.

or



- Deleting a seam programme.

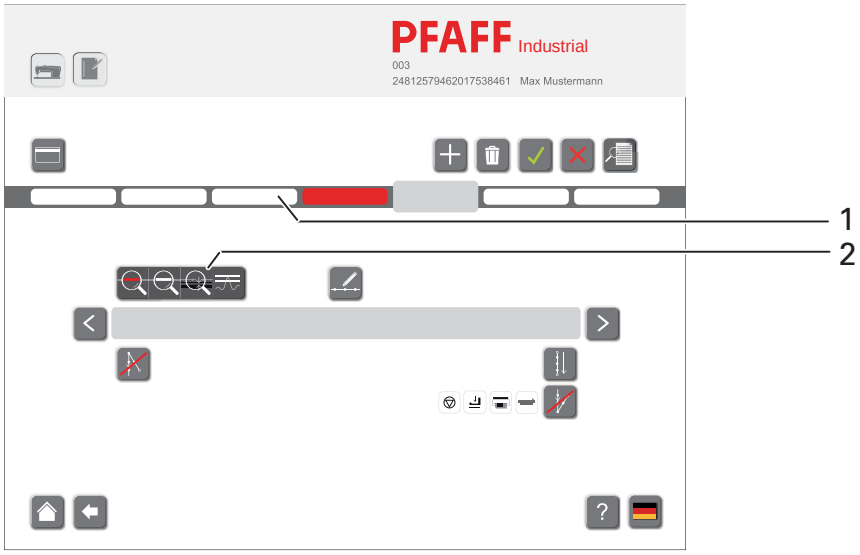



- Call up the Program Header function.

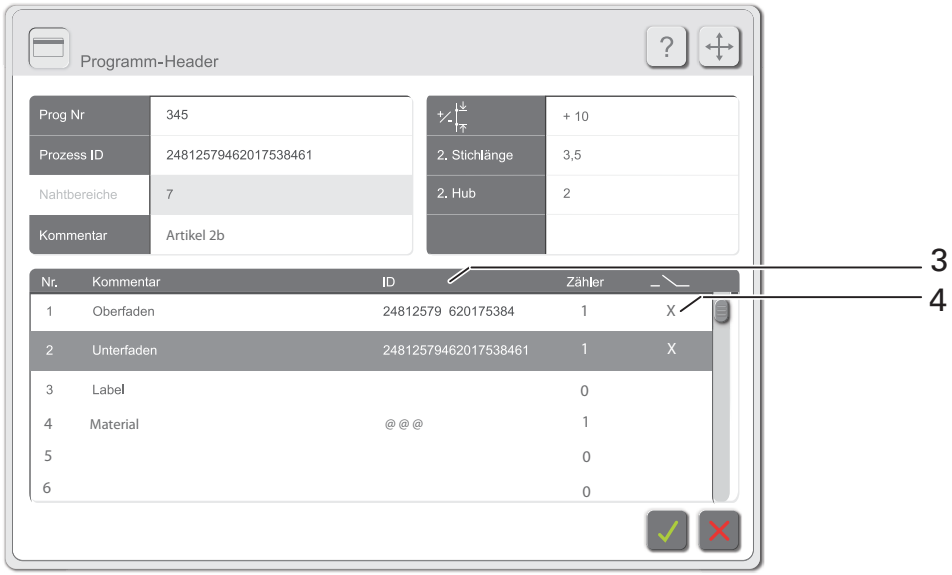

- If necessary, enter/change the program number, process-ID and comment.
- Enter the value for the stitch length correction dependent on the material.
- Enter/change the value for the second stitch length (can be called up with the appropriate key on the machine head).
- Enter/change the value for the second stroke (can be called up with the appropriate key on the machine head).
- Enter top thread and bobbin thread ID in input field **3**, or scan in via hand scanner to activate this function later in input field **4**.
  Control will then only accept sewing material with that ID.

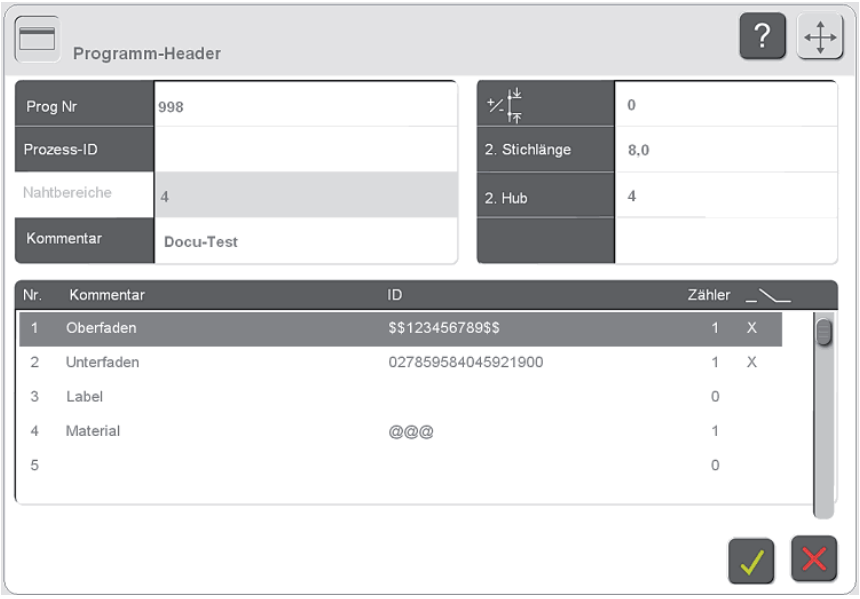

Input Scan Options with wildcard characters in the program-header

1. With input of $$ before a character string or $$ after a character string, only the character string is controlled, true or not true.
   All characters before or after the character string are only documented

Sample:
Header input: $$123456789$$
Bar code : 888881234567895555 OK documented in the protocol
Bar code : 7777771234567893333 OK documented in the protocol
Bar code 888881234567805555 nicht OK, Error not documented in the protocol.

2. Enter @ @ @ in input field **3**.
   The control will not carry out any adjustments, IDs will only be logged.

- Select the data for printing the end label (value "**1**" = print label each time; value "**10**" = print label every tenth time).
- Select seam section from sector **1.**

- If necessary, delete selected seam section.
- If necessary, insert seam section after the selected seam section.
- With function **2** specify the following for the selected seam sector.
  - Activate/deactivate docu-seam sector
  - Activate/deactivate missed stitch recognition function
  - Activate/deactivate edge guide recognition function
  - Specify thread strength, see Chapter **2.04.05 Sensors**

- Call up the menu for entering the sewing parameters and enter the appropriate values, see Chapter **2.04.01 Sewing parameter input**.

- Call up the menu for entering the action at beginning of the seam sector. Depending on the action selected, the symbol may be different. In this example the "double start bartacks" action is selected.

- Select the action and enter/change the appropriate values, see Chapter **2.04.02 Input of action at beginning of seam sector.**



- Call up the menu for the input of the recognition of the end of the seam sector. Depending on the function selected, the symbol may be different. In this example the "recognition of the end of the seam section by knee switch" is selected.



- Select the function for the recognition of the end of the seam sector and, if necessary, enter/change the appropriate values, see Chapter **2.04.03 Input of end of seam sector**.
- Call up the menu for entering the action at the end of the seam sector. Depending on the action selected, the symbol may be different. In this example the "condensed end stitches" action is selected.
- Select the action and, if necessary, enter the label number, see Chapter **2.04.04 Input of action at end of seam sector.**



- If necessary, shift the seam sector within the seam.



- After entering/editing the desired seam sectors, save the seam program and quit the seam program function.



- Call up the production function.

2.04.01 Sewing parameter input

- In seam programming call up the menu for sewing parameter input.

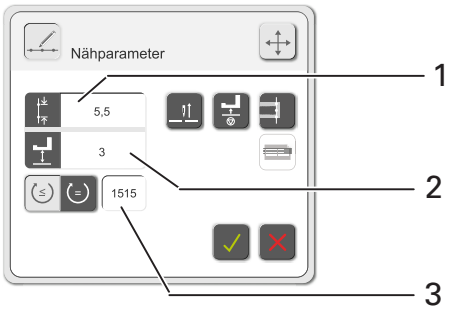

Description of the functions

Stitch length input
After tapping area **1,** the input menu for the stitch length in the current seam sector is called up.

Sewing foot lift input
After tapping area **2,** the input menu for the presser foot lift in the current seam sector is called up.

Speed input
After tapping area **3** the input menu for the speed in the current seam sector is called up.

This function is used to select the variable speed. The speed can be adjusted with the pedal position up to the maximum value (This function is activated in the example).

This function is used to select the constant speed. The speed cannot be adjusted with the pedal position.

Needle raised at stop
This function is switched on or off for the current seam sector. If the function is switched on, the needle moves to the top position when sewing stops.

Foot raised at stop
This function is switched on or off for the current seam sector. If the function is switched on, the foot is raised when sewing stops.

Sew in label (only after a docu-seam area)
This function is switched on or off for the current seam sector. If the function is switched on, a label is sewn in after the seam sector has been completed.

Scan label
This function is switched on or off for the current seam sector. If the function is switched on, the label must be scanned.

Conclude the input
The input is concluded by taking over the selection and the entered values.

Stop the input
The input is concluded without taking over the selection and the entered values.

2.04.02 Input of action at beginning of seam sector

- Call up the menu for the input of the action at the beginning of the seam, see Chapter **2.04 Creating seam programs.**

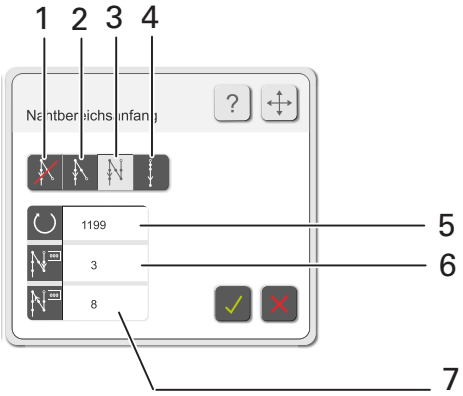

Description of the functions

Start bartacks and condensed start stitches off
After selecting function **1**, neither a start bartack nor a condensed start stitch is sewn at the beginning of the seam sector.

Start bartack
After the selection of this function and the input of the values for the tack speed in sector **5**, as well as the number of bartacks, the start bartack at the beginning of the seam sector is sewn with the corresponding values.

Double start bartack (currently active)
After the selection of this function and the input of the values for the tack speed in sector **5**, the number of forward stitches in sector **6** and the number of reverse stitches in sector **7**, the double start bartack at the beginning of the seam sector is sewn with the corresponding values.

Condensed start stitches
After the selection of this function and the input of the values for the stitch length and the number of stitches, the condensed stitches at the beginning of the seam sector are sewn with the corresponding values.

Conclude the input
The input is concluded by taking over the selection and the entered values.

Stop the input
The input is concluded without taking over the selection and the entered values.

2.04.03 Input of end of seam sector

- Call up the input for the recognition of the end of the seam sector, see Chapter **2.04** Creating seam programs.

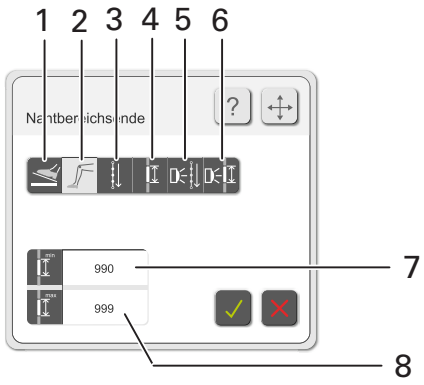

Description of the functions

End of seam sector by pedal function
After function **1** has been selected, the end of the seam sector is started with the pedal function.

End of seam sector by knee switch
After function **2** has been selected, the end of the seam sector is started with the pedal function. The minimum number of stitches for the seam sector is defined with sector **7**, the maximum number with sector **8**.

End of seam sector by stitch counting
After function **3** has been selected and following the input of the value for the number of stitches, the end of the seam sector is started after the corresponding number of stitches have been sewn.

End of seam sector by seam length
After function **4** has been selected and following the input of the value for the seam length, the end of the seam sector is started after the corresponding seam length has been sewn.

End of seam sector by sensor with stitch counting
After function **5** has been selected and following the input of the values for the maximum and minimum number of stitches, the end of the seam sector is started by sensor according to the number of stitches entered.

End of seam sector by sensor with seam length
After function **6** has been selected and following the input of the values for the maximum and minimum seam length, the end of the seam sector is started by sensor within the corresponding lengths given.

Conclude the input
The input is concluded by taking over the selection and the entered values.

Stop the input
The input is concluded without taking over the selection and the entered values.

2.04.04 Input of action at end of seam sector

- Call up the menu for the input of the actions at the end of the seam, see Chapter **2.04** Creating seam programs.

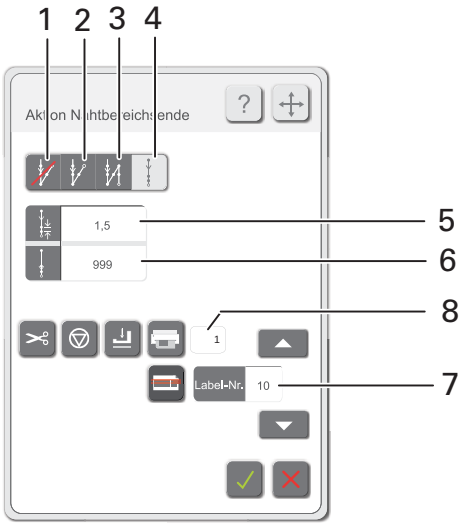

Description of the functions

End bartacks and condensed end stitches off
After selecting function **1**, neither an end bartack nor a condensed end stitch is sewn at the end of the seam sector.

End bartack
After the selection of this function **2** and the input of the values for the tack speed, as well as the number of bartacks, the end bartack at the end of the seam sector is sewn with the corresponding values.

Double end bartack
After the selection of this function **3** and the input of the values for the tack speed, the number of forward stitches and the number of reverse stitches, the double end bartack is sewn at the end of the seam sector with the corresponding values.

Condensed end stitches (currently active)
After the selection of this function **4** and the input of the values for the stitch length in sector **5** and the number of stitches in sector **6**, the condensed stitches at the end of the seam sector are sewn with the corresponding values.

Thread trimming on/off
This function is used to switch thread trimming at the end of the seam sector on or off.

Sewing stop
This function is switched on or off. If the function is switched on, the machine stops at the end of the seam sector.

Foot lowered
This function is switched on or off. If the function is switched on, the foot remains down at the end of the seam sector.



Print label on/off

This function is used to switch the label printing function at the end of the seam sector on or off.

Selection of the label

The label, which is to be attached, can be selected in sector 7.

Label payout

The number of labels to be printed can be selected in range 8.



Scan label

This function is switched on or off for the current seam sector. If the function is switched on, the label must be scanned.



Conclude the input

The input is concluded by taking over the selection and the entered values.



Stop the input

The input is concluded without taking over the selection and the entered values.

2.04.05 Thread force

- Call up the menu for entering the parameters for the sensor in the seam programming menu or from the service menu.

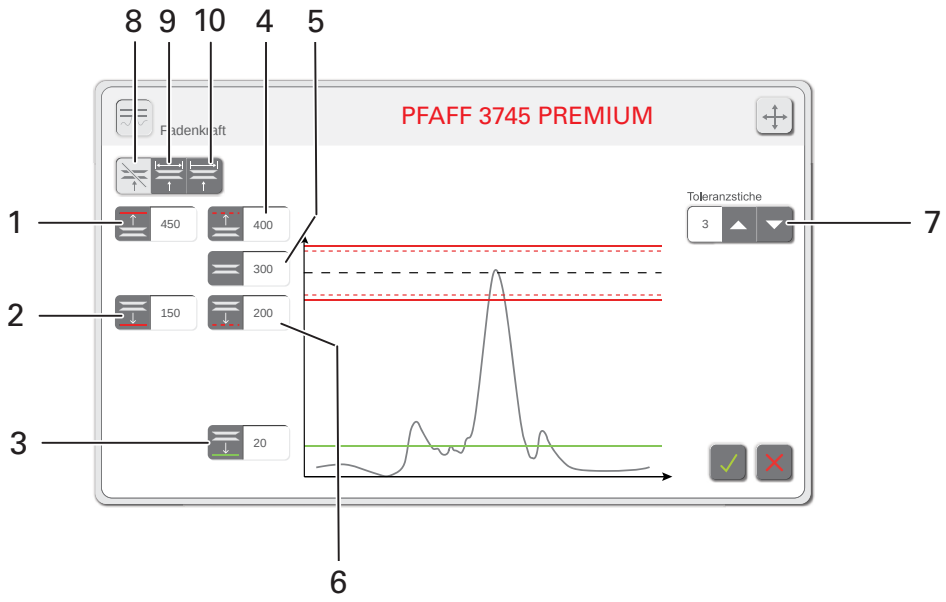

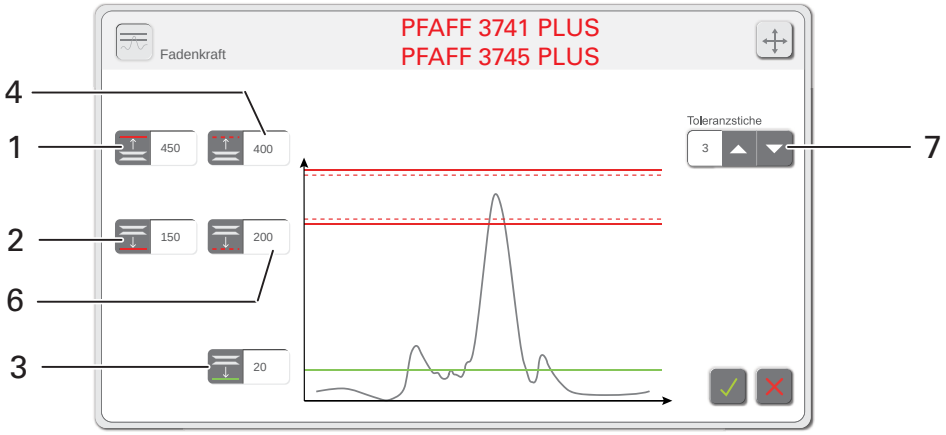

Description of the functions

Hard top limit value

The limit value is entered in sector **1**. In the docu-seam area this value must never be exceeded.

Hard bottom limit

The limit value is entered in sector **2**. In the docu-seam area the value must never be lower than this limit.

Bottom limit for missed stitch recognition

The limit value is entered in sector **3**. If the value falls below this limit, a missed stitch is recognised.

Soft top limit
The limit value is entered in sector 4 In the docu-seam area this value may be exceeded a few times. The number of tolerance stitches is entered in sector 7.

Setpoint (only on the PFAFF 3745 PREMIUM)
The Setpoint is entered in sector 5.

Soft bottom limit
The limit value is entered in sector 6. In the docu-seam area it is possible to drop below this level a few times. The number of tolerance stitches is entered in sector 7.

Tolerance stitches
The number of tolerance stitches is entered in sector 7. The number of tolerance stitches is used to define how often the thread strength within the docu-seam area may exceed or drop below the soft limits.

Thread tension control (only on the PFAFF 3745 PREMIUM)
Pressing the button 8 deactivates the function "Thread tension control" during sewing, button 9 reactivates the function.
Pressing button 10 activates the function "Thread tension control" at the end of the range only.



Conclude the input
The input is concluded by taking over the selection and the entered values.



Stop the input
The input is concluded without taking over the selection and the entered values.

2.05 Service

In the service menu the states of the digital and analogue inputs are displayed. The outputs can be set and reset manually. In addition functions for adjusting the drives, the sensors and the edge guide can be called up, and information about the status of software and firmware displayed.
Only the supervisor and administrator have access to the service menu.

- Log-in as administrator or supervisor.



- Select the "tools" function.



- Call up the service menu.



Descriptions of the functions in the service menu



Inputs/outputs
After this function has been selected, the machine's inputs are displayed. Outputs can set and reset manually. The pedal function can be checked.



Drives
After this function has been selected, the motor functions can be checked and the value for the motor reference position altered.



Feed regulator configuration
After this function has been selected, the feed regulator can be configured.



Edge guide on/off
After this function has been selected, the adjustment function of the edge guide can be switched on or off.



Sensors
After this function has been selected, the current value for the thread strength is displayed. Adjustment to the thread strength and bobbin thread recognition can be made.



Version

After this function has been selected, the current status of the machine's software and firmware is displayed.



Scanner

For scanner commissioning, please see chapter **4.07.03** in the settings manual.



Camera

For camera commissioning, please see chapter **4.07.04** in the settings manual.

2.06 Cold start



When a cold start is carried out, all altered parameter for the sewing head are deleted and set back to default values (status at the time of delivery)!

- Log-in as administrator.



- Select the "tools" function.



- Select the "cold start" function.

2.07 Users – rights

A user ID must be entered at initial power up of the machine.
On delivery of the machine, the user ID "pfaff" must be entered.

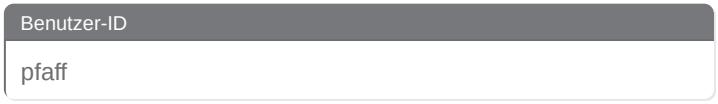

Any number of users can be added and/or edited. The rights of individual users are defined by allocating the users to relevant user groups.

User groups

- Administrator
- Supervisor
- Operator
- Guest

Only the administrator can create and edit users, and assign users to specific user groups.

- Log-in as administrator.



- Select the "tools" function.



- Call up the menu for entering the users and their rights.

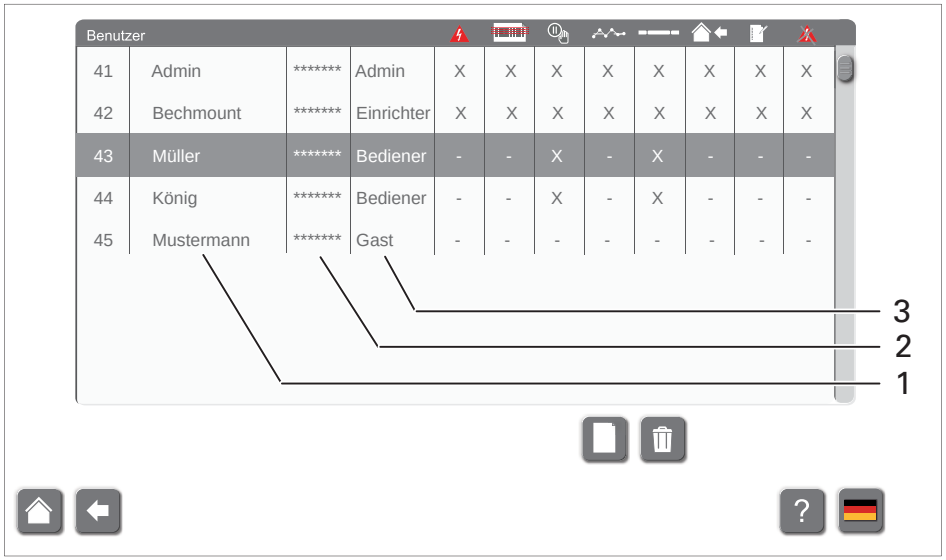

- In order to change data for a specific user, the relevant entry (name **1**, code **2,** or user group **3**) is selected from the list and edited via the entry field.
- Functions can be activated/deactivated by clicking on relevant columns (**X** = function activated, - function deactivated).



- Create a new user.



- Select a user from the list and delete.

Function descriptions


Docu-seam can be ended


Label copy can be created


Manual seam interruption can be switched on


Test seam mode can be activated


Seam programme can be activated


Production can be interrupted


Seam programme can be created


Docu-seam error can be ignored

2.08 Backup – restore

During a back-up the current database is saved. The backup can be saved on the hard disk of a PC or on an external data carrier (e.g. USB-stick). A backup should be carried out by the supervisor at regular intervals.

- Log-in as administrator.



- Select the "tools" function.



- Call up the menu for making a backup or for starting the restoration function.



- Click on window **1** at first backup.
- Select target directory and start backup of the database.
- Select time, day, and month for backup.
- The day is specified in numbers (**1** = Monday).
- Place a checkmark next to the relevant window in order to allow the backup to proceed at the specified time and date.



The PC associated with the machine must be switched on at the set backup time.

- In order to revert to a previous status, select the function "Restore".
- Select the relevant directory containing backup data, and start the restore process.
- Max. data base size and monitoring mode setting in window **2**



Importing a seam programme

Select the relevant seam programme from the transfer database.



Initialising the database

By selecting this function all previously recorded sewing protocol data will be deleted.



Make sure to create a **backup first**!



After a restore or a database initialisation, the program will have to be restarted.

Daten base explorer

Shows the data base content.

Daten base setting

Select your data base type and the data base connection (see window **3** and **4**).

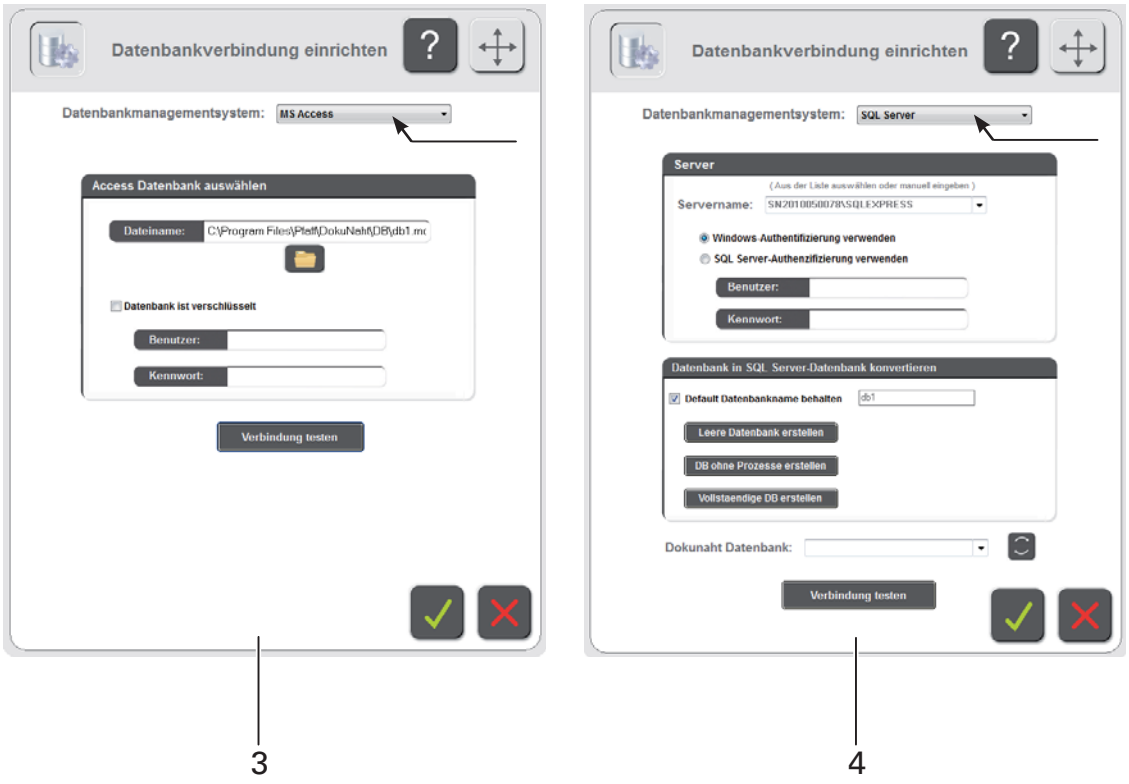

3 4

2.09 Label-editor

With the label editor it is possible to create various labels individually and to store them.

- Log-in as administrator or supervisor



- Select the "tools" function.



- Call up the label editor.

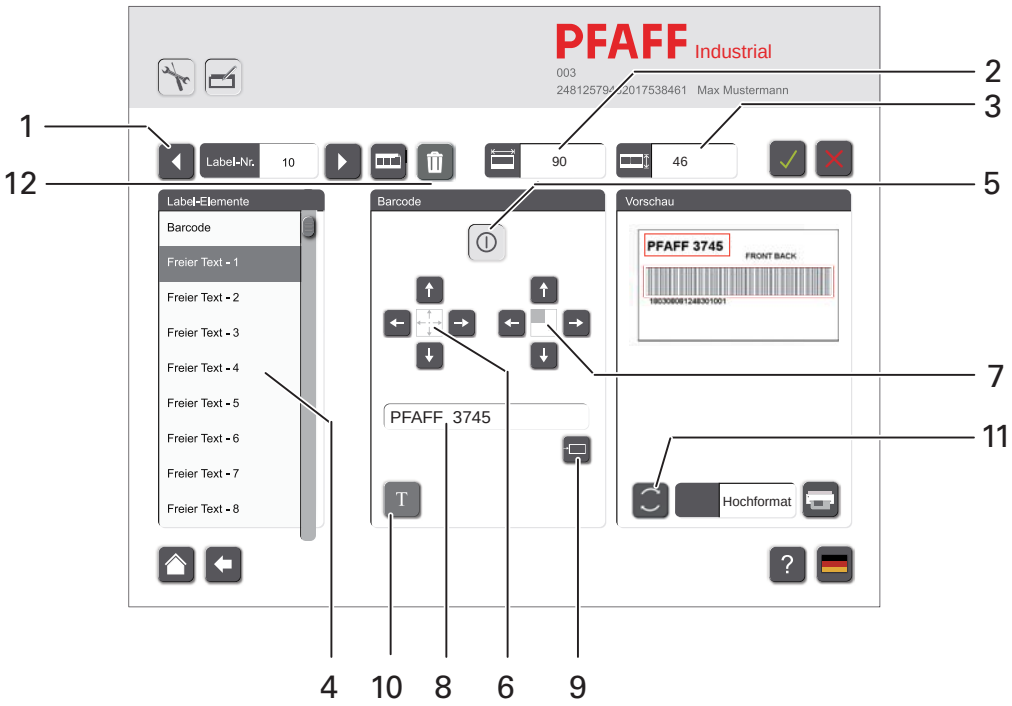

- Select the desired label (label number) by tapping the arrow keys **1**.
- If necessary, change the size of the label by tapping the selection boxes **2** and **3**.
- Select the desired label element by tapping an item from list **4**.
- Activate the selected label element with function **5**. The label element is shown as a preview.
- If necessary edit the selected label element with function **6**.
- If necessary change the size of the selected label element with function **7**.
- After tapping box **8**, enter the text for the selected label element.
- If necessary select variables (time, date, counter etc.) for the selected label element with function **9**.
- If necessary change the font of the selected label element with function **10.**
- If necessary, change format via function **11**.
- If necessary, change element via function **12**.
- If necessary add more label elements, or deactivate existing label elements with function **5**.

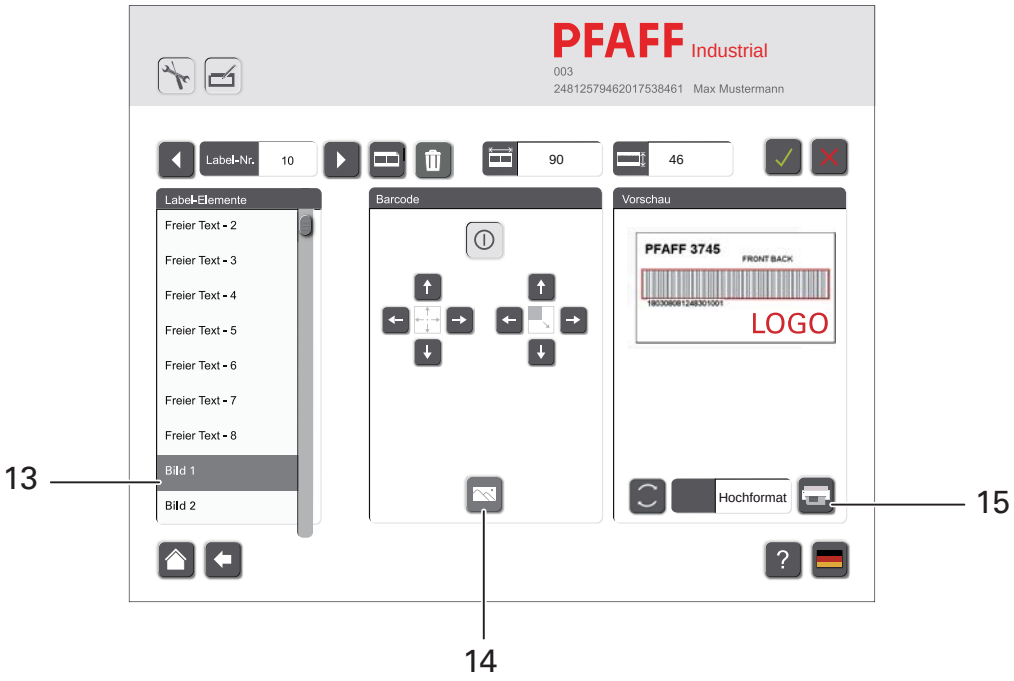

If a picture element is selected from list **13**, the symbol **14** appears on the monitor.

- Select an appropriate label element (e.g. "picture **1**) by tapping it on list **13**.
- Select the desired picture file with function **14**. The picture appears as a preview. The picture element can be shifted as described above and the size changed.
- Carry out a test print-out of the label by selecting function **15**.



- Save the changes and quit the label editor function.



- The entry mode deactivated without applying the selection.

2.10 Defining options and interfaces

In this function, options like label printer, thread type, material type, service, and day counter, as well as control interfaces can be defined.

- Log on as administrator or setter.



- Select function "Tools".



- Call up function "Options and interfaces".

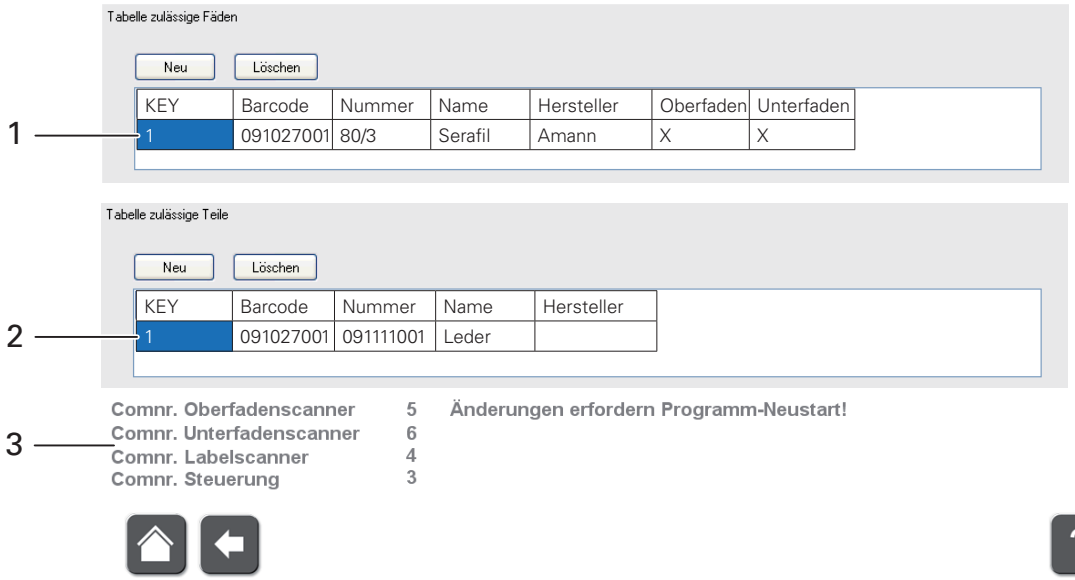

- Define relevant threads by inputting their barcode, thread thickness, thread type, and thread manufacturer in the entry window **1** for top and bobbin threads.
- Input relevant material by entering the barcode, material number, and material type in the entry window **2**.



If no thread and material are selected, any type of thread or material can be used.
If material and thread were selected, only the selected items can be used.

- Input label printer in window **3**.

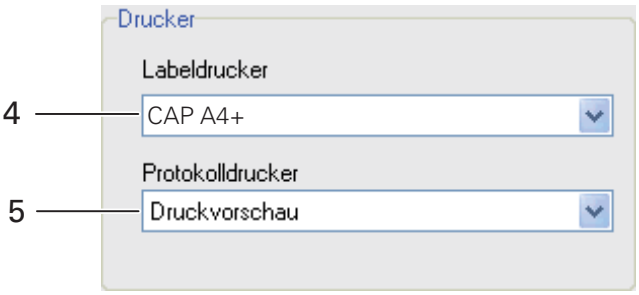

- Input label printer in window **4** .
- Define print process for protocol printing in window **5.**

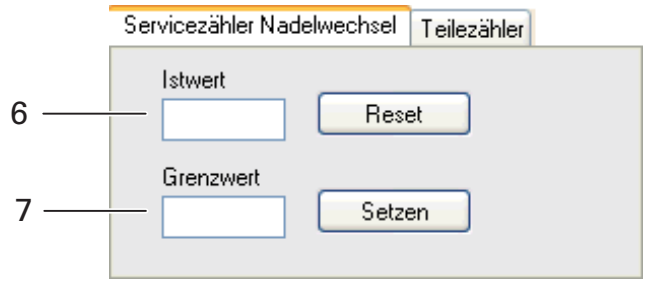

- Input number of stitches until neele change in window **6** (once preset threshold value **7** is reached, the error message "Change needle“ will be displayed; a re-set of the actual value will re-start the count).

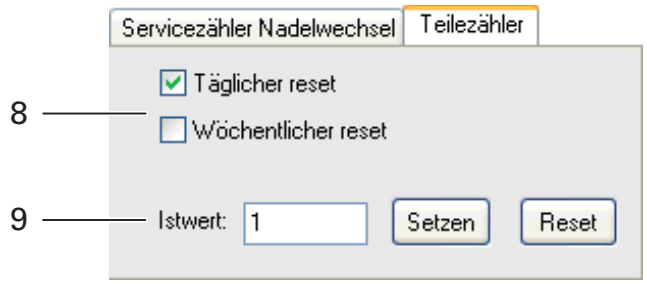

- A daily or weekly parts counter can be specified in window **8.**
- The counter start value can be entered in window 'Actual value'.

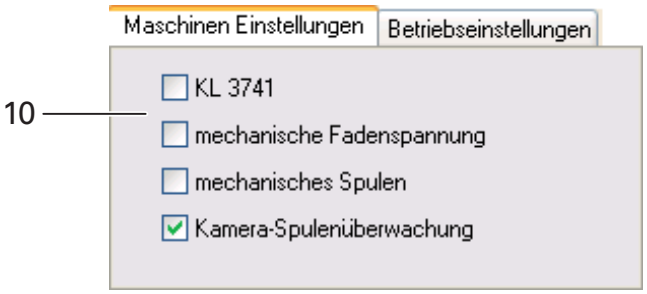

- Relevant machine equipment must be selected in window 10.
- Selecting "**3741**" will suppress functions.

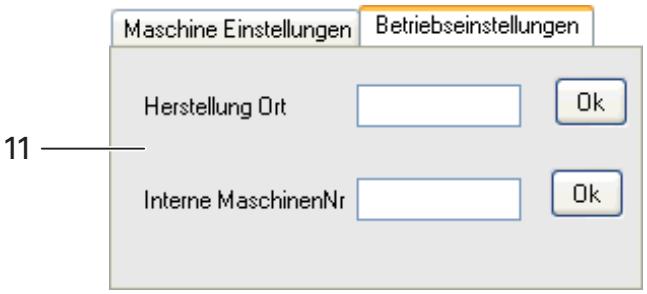

- Operation-specific data is entered in window **11.**

The programme will have to be restarted after any changes!

PFAFF® Industrial

POWERLine

3741
3745

INSTRUCTION MANUAL

This instruction manual applies to machines from software version **1.8** and serial number **2 763 625** onwards

Betriebsanleitung engl. 06.12

3.01 Proper use

The PFAFF 3741 PLUS is a workplace with a single-needle, lockstitch, special high-speed sewing machine with bottom and needle feed, mechanical tensioning, a mechanical bobbin winder, and a large hook and docu-seam system.

The PFAFF 3745 PREMIUM is a workplace with a single-needle, lockstitch, special high-speed sewing machine with unison feed, electrically controlled tensioning, an electrical bobbin winder, and a large or extra large hook and docu-seam system.

The PFAFF 3745 PLUS is a workplace with a single-needle, lockstitch, special high-speed sewing machine with unison feed, mechanical tensioning, a mechanical bobbin winder, and a large hook and docu-seam system.

The machines are used for sewing lockstitch seams in fields requiring safety seams, e.g. in the automotive industry.



Any and all uses of this machine which have not been approved of by the manufacturer are considered to be inappropriate! The manufacturer cannot be held liable for any damage caused by the inappropriate use of the machine! The appropriate use of the machine includes the observance of all operational, adjustment, maintenance and repair measures required by the manufacturer!

3.02 Specifications *

Stitch type: .....301 (lockstitch)
Needle system: 134-35

Version: BN9, CN9

Needle size in 1/100 mm
Version BN9: ..... 80 – 100
Version CN9: ..... 110 – 140

Max. stitch length:
Version CN9: .....9 mm

Max.thread size (synthetic):
Version CN9: ..... 15/3▲
Maximum speed:.....3800 spm.

Presser foot clearance: .....20 mm
Clearance width: .....350 mm
Clearance height: .....120 mm
Bed plate dimensions: .....640 x 200 mm

Ambient temperature
85% rel. humidity (condensation not permitted): ..... 5 – 40° C

Noise data:
Noise emission level at workplace with a sewing speed of 2400 spm: ..... L_{pA} < 80 dB(A)■
(Noise measurement in accordance with DIN 45 635-48-A-1, ISO 11204, ISO 3744, ISO

Motor data: ..... See name plate on motor

Air consumption per switch cycle: .....0.146 Nl

Net weight of sewing head: .....approx. 72 kg
Gross weight of sewing head : .....approx. 82 kg

* Subject to alterations
▲ synthetic, or other sizes of comparable thread types
■ K_{pA} = 2,5 dB

3.03 Disposal of Machine

- Proper disposal of the machine is the responsibility of the customer.
- The materials used for the machine are steel, aluminium, brass and various plastic materials. The electrical equipment comprises plastic materials and copper.
- The machine is to be disposed of according to the locally valid pollution control regula-tions; if necessary, a specialist ist to be commissioned.



Care must be taken that parts soiled with lubricants are disposed of separately according to the locally valid pollution control regulations!

3.04 Transportation, packing and storage

3.04.01 Transportation to customer's premises

The machines are delivered completely packed.

3.04.02 Transportation inside the customer's premises

The manufacturer cannot be made liable for transportation inside the customer's premises nor to other operating locations. It must be ensured that the machines are only transported in an upright position.

3.04.03 Disposal of packing materials

The packing materials of this machine comprise paper, cardboard and VCE fibre. Proper disposal of the packing material is the responsibility of the customer.

3.04.04 Storage

If the machine is not in use, it can be stored as it is for a period of up to six months, but It should be protected against dust and moisture.
If the machine is stored for longer periods, the individual parts, especially the surfaces of moving parts, must be protected against corrosion, e.g. by a film of oil.

3.05 Explanation of symbols

In this instruction manual, work to be carried out or important information is accentuated by symbols. These symbols have the following meanings:



Note, information



Cleaning, care



Lubrication

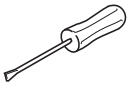

Maintenance, repairs, adjustment, service work
(only to be carried out by technical staff)

3.06 Controls

3.06.01 On/off switch / Sewing lamp switch

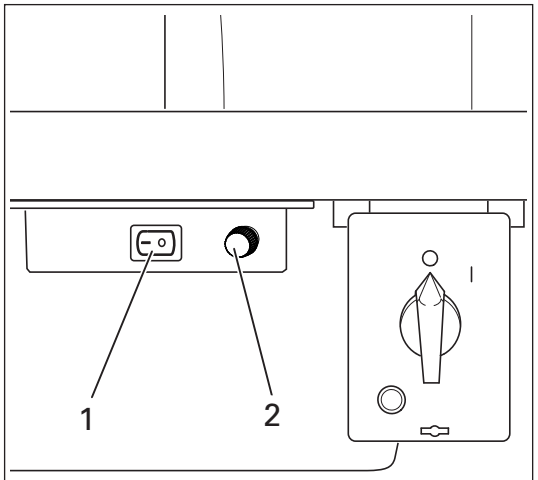

Fig. 6 - 01

- To switch the control system of the machine on or off, turn main switch **1**.

Please note that when activating the machine, the machine must be activated first, and then the power bar.

- Switch the sewing lamp, which is integrated in the machine head, on or off by operating switch **1**.
- Switch 2 regulates the brightness of the sewing lamp.

3.06.02 Power bar

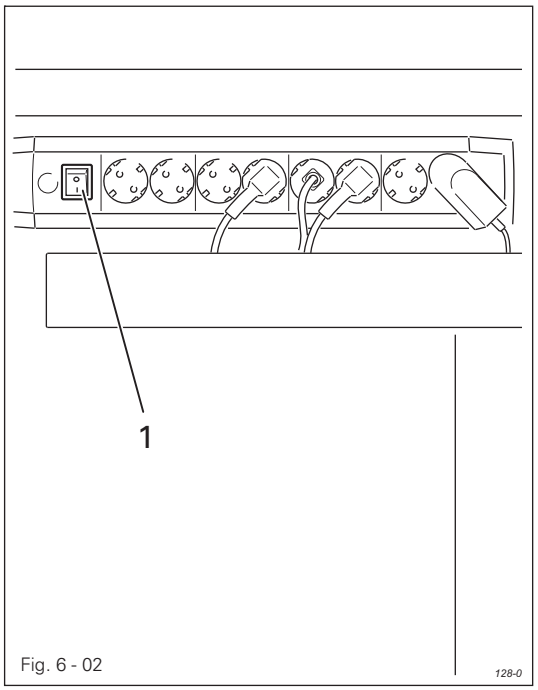

Fig. 6 - 02

- Switch **1** is used to switch the complete power supply of the PC components (PC, touch-screen monitor, hand-held scanner, printer etc.) on or off.

If an individual device is not activated after the power bar has been switched on, please check, if the switches of the individual devices are activated.

3.06.03 Keyboard on machine head

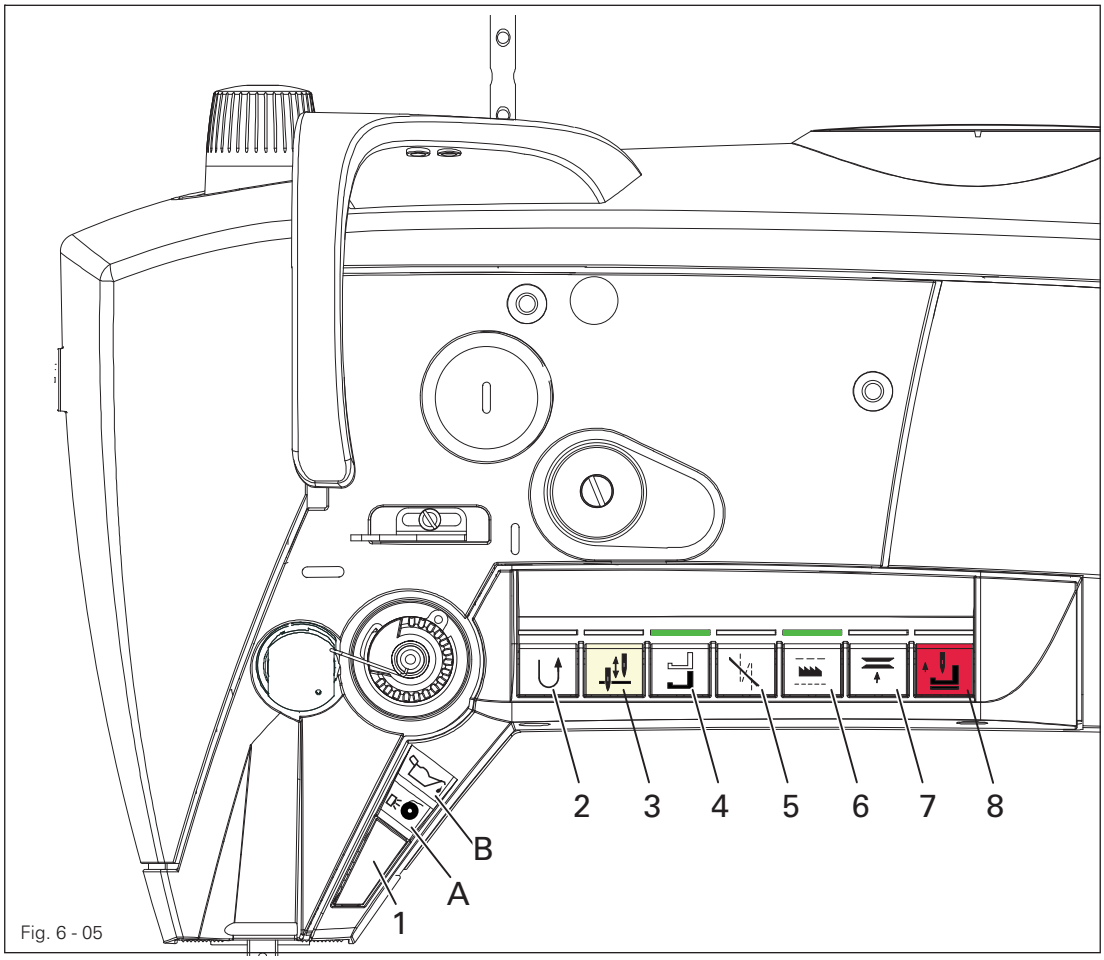

Fig. 6 - 05

- The machine has a keyboard with **8** keys to activate different functions.
- In the keys **2** – **7** there are yellow LEDs. These shine when the respective function has been allocated to key **1**.
- Green LEDs are located above the keys **2** - **7**. These shine when the function has been activated.
- Above key **1** there are two symbol lamps.
  Lamp **A** indicates the status of the bobbin thread control.
  Lamp **B** shines when the minimum level of the oil supply has been reached.
- When the keys **1** – **8** are operated, the functions listed below are carried out.

Key **1**: The functions of the keys **2** - **7** can be allocated to this key.
To program key **1**, simultaneously press one of the keys **2** - **7** and key **1** for approx. **3 seconds**. The function of the selected key is taken over and the yellow LED in this key lights up

Key **2**: Reverse sewing or intermediate backtacks during the seam.
The following setting is configured via parameter **634**:
Set value ON = Feed adjustment when machine has stopped and when machine is running
OFF = Feed adjustment only when machine is running



Key **3**: Needle position change
(under Parameter **695** other functions can be assigned to this key)
Set value 1 = needle raised without trimming
2 = needle position change
3 = single stitch
4 = single stitch in reverse
5 = moving forwards to needle position step by step
6 = programmable tack on / off
7 = proceed to next sewing range



Key **4**: Calling up the pre-selected top feed lift
(Diode on = **2**nd lift, diode off = standard lift)
This button is without function in the model PFAFF 3741.



Key **5**: Bartack suppression for one bartack
(under Parameter **780** other functions can be assigned to this key)
Set value 1 = tack inversion (once)
2 = tack suppression (all tacks switched off)
3 = reverse move to needle position stepby step
4 = Edge trimmer on /off
5 = programmable tack on / off



Key **6**: Calling up the pre-selected stitch length
(Diode on = **2**nd stitch length, diode off = standard stitch length



Key **7**: Threading aid
Needle rises without thread trimming, thread clamp is opened, thread tension is released and the motor start inhibitor is activated.
If the key is operated again, the motor start inhibitor is deactivated.



Key **8**: EMERGENCY key
Needle rises without thread trimming, thread clamp is opened, thread tension is released, presser foot is raised and the motor start inhibitor is activated. If the key is operated again, the motor start inhibitor is deactivated.



The method for setting parameters is described in the settings manual, and may only be carried out by certified professionals!

3.06.04 Pedal

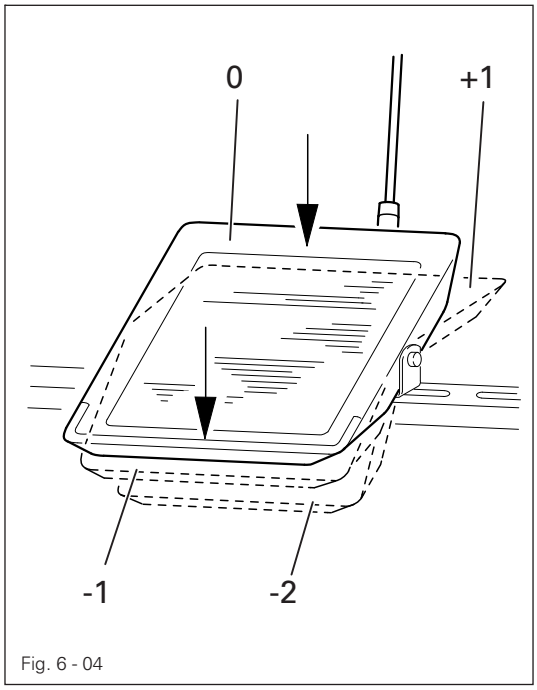

Fig. 6 - 04

- With the on/off switch on
  - 0 = Machine stop
  - +1 = Sew
  - - 1 = Raise presserfoot
  - - 2 = Trim thread (on machines with thread trimmer)

3.06.05 Lever for lifting the presser foot

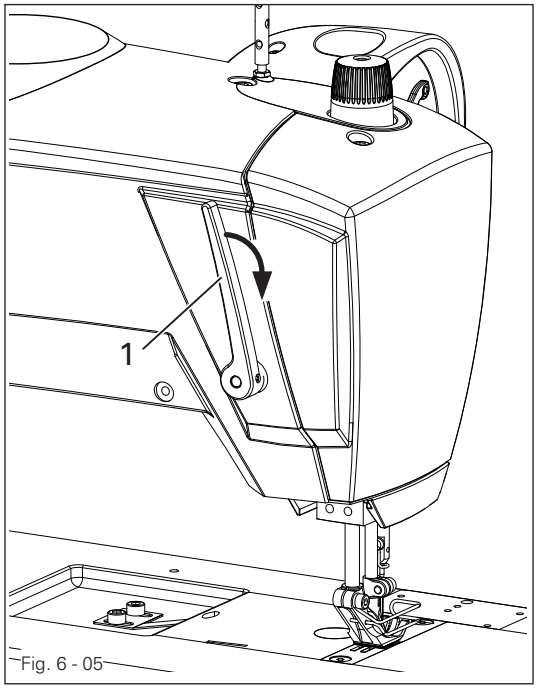

Fig. 6 - 05

- The sewing foot can be lifted by raising lever 1.

3.06.06 Knee switch (optional)

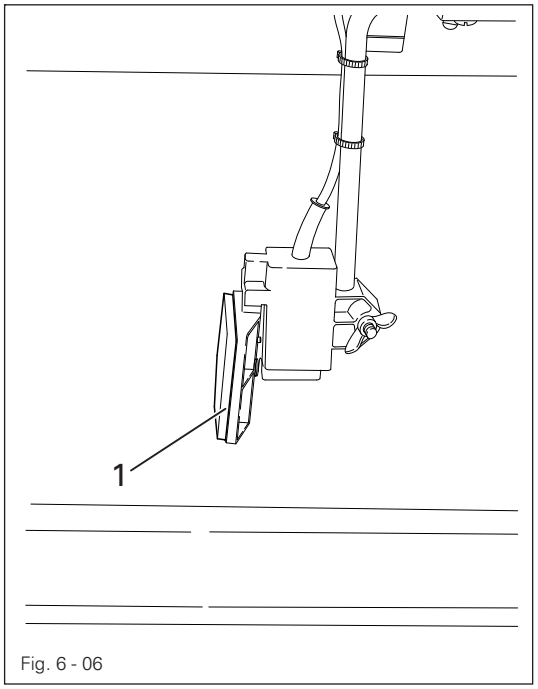

Fig. 6 - 06

- If the knee switch is operated, the docu-seam sector is switched on or off.

3.06.07 Bobbin thread supply monitor

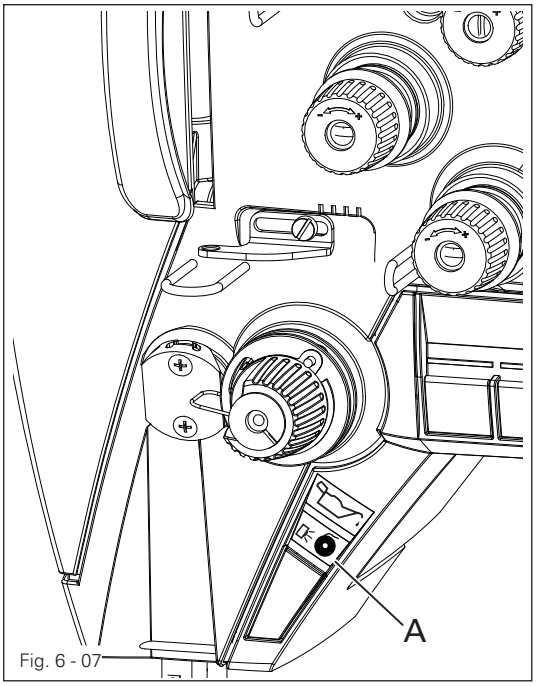

Fig. 6 - 07

- When the residual thread amount is reached, symbol lamp A flashes.
- After the next thread trimming action, a corresponding message is shown on the touch-screen monitor.
- After the bobbin has been changed and the message acknowledged, the operating process can be continued.

3.06.08 Adjustment of the stand height (optional)

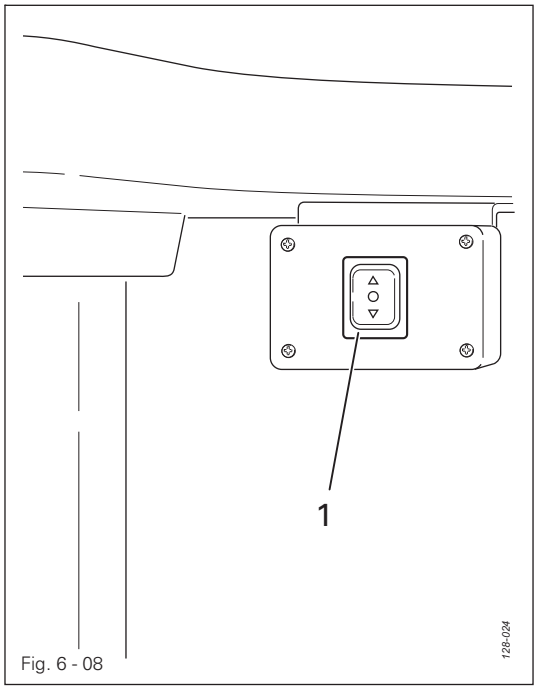

Fig. 6 - 08

- The stand height can be adjusted by operating switch-key **1** accordingly.

3.06.09 Touch-screen monitor

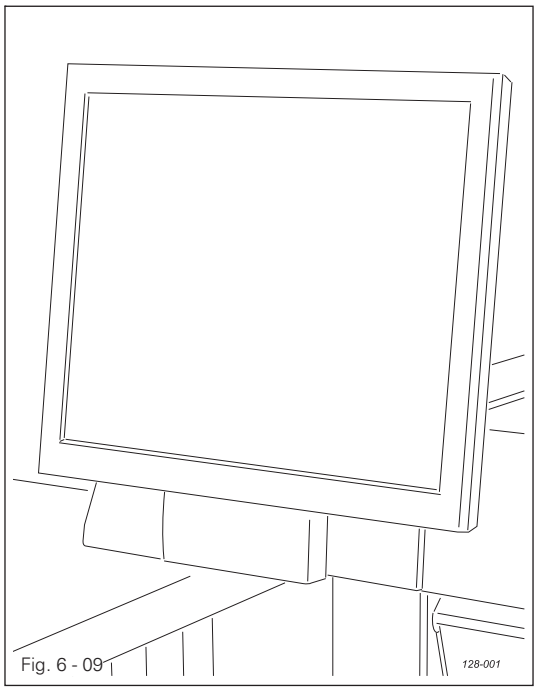

Fig. 6 - 09

- All necessary inputs are carried out on the touch-screen monitor. The appropriate operating mode, messages, parameters etc. are displayed.

3.06.10 Label-printer

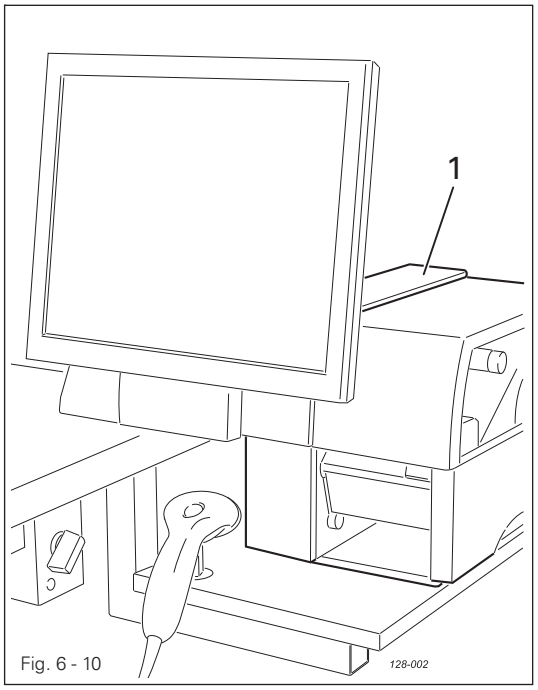

Fig. 6 - 10

- The label printer **1** is used for printing the label.

3.06.11 Hand-held scanner

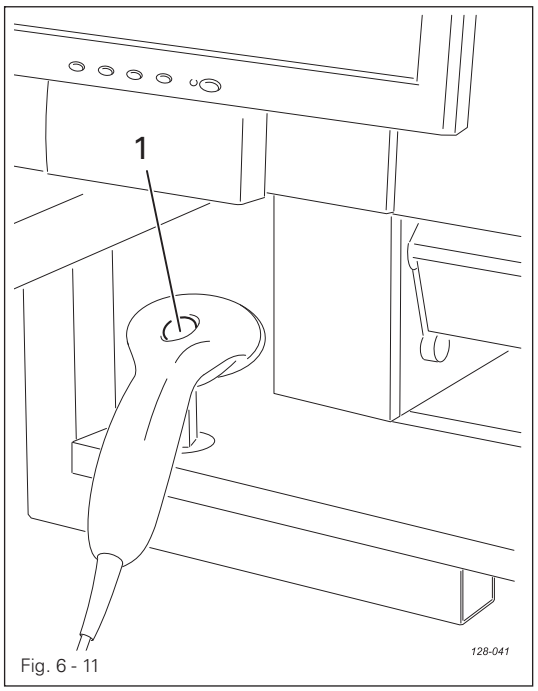

Fig. 6 - 11

- With the aid of the hand-held scanner, after pressing key **1** it is possible to read user and process data. For example, the user log-in, the input of material, needle thread and bobbin thread data can be carried out with the hand-held scanner.

3.06.12 PC

Never switch off the PC, if the PC has not been shut down completely!

Danger of data loss!

3.07 Setting up

All instructions and regulations in this instruction manual must be observed. Special attention should be given to all safety regulations.

All setting-up work may only be carried out by appropriately trained personnel.

3.07.01 Log-in

- Switch on the machine on the power bar and wait until the PC has started.

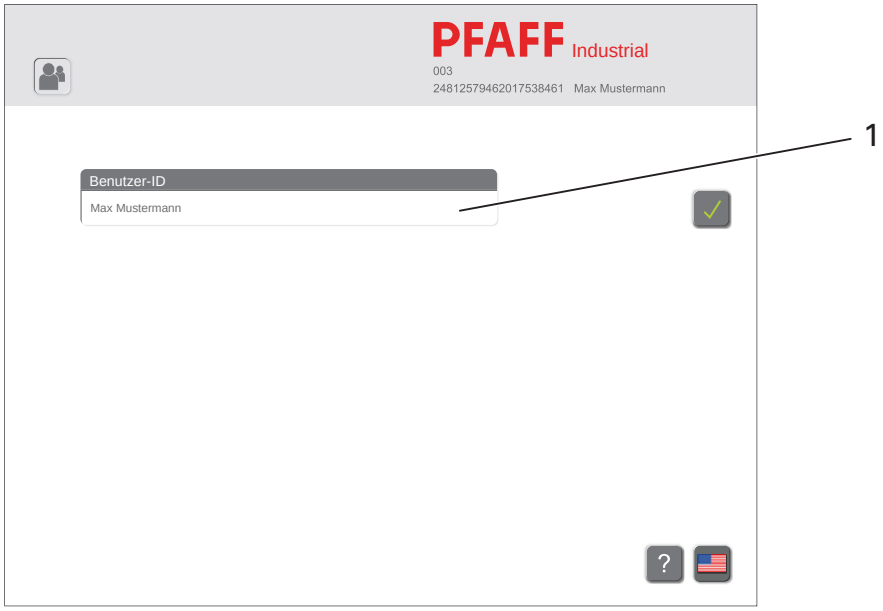

- Tap on the input box **1**.
  A box for entering the user appears.
- Enter user.



- Confirm input.

If the user has an ID-card with appropriate barcode, alternatively the user can be entered with the use of the hand-held scanner.

3.07.02 Language selection

- Carry out the log-in.



- Call up the menu for language selection.
- Select the desired language (flag).
  The selected language is immediately taken over for the complete application.

3.07.03 Inserting the needle

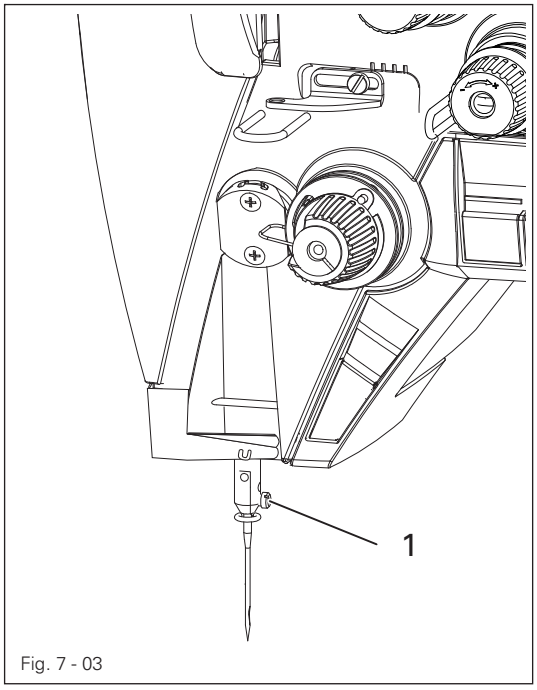

Fig. 7 - 03



Only change the needle when the threading aid is activated! Danger of injury if the machine suddenly starts running!



Only use needles from the system intended for the machine, see Chapter 3 Specifications!



- Activate the threading aid on the machine head by pressing the key.
- Loosen screw 1.
- Insert the needle as far as possible. The long needle groove must be facing left.
- Tighten screw 1.



- Switch off the threading aid on the machine head again by pressing the key.

3.07.04 Winding the bobbin thread, regulating the winder tension

(PFAFF 3741+ 3745 PLUS)

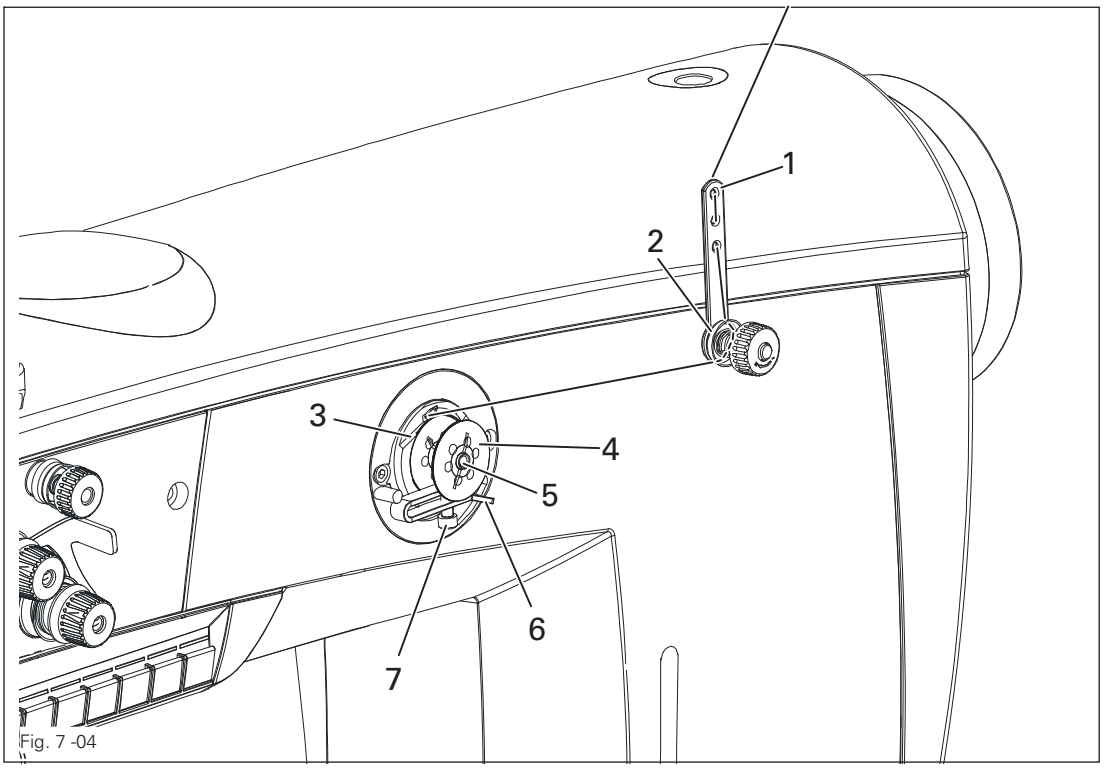

Fig. 7 -04

- Draw the thread from the reel stand through guide hole **1** into the bobbin winder tension unit **2** and then behind the thread clamp **3**.
- Cut off the thread in thread clamp **3**. The thread is retained.
- Place empty bobbin **4** on the bobbin winder spindle.
- To switch on the bobbin winder, push up lever **6**.

The bobbin is wound during sewing.

- The bobbin winder stops automatically, when the bobbin **4** is filled sufficiently.
- Remove full bobbin **4** and cut off the thread in thread clamp **3**.
- The tension of the thread on bobbin **4** can be adjusted on the bobbin winder tension unit **2**.
- The volume of thread on bobbin **4** can be adjusted with screw **7**.

3.07.05 Winding the bobbin thread, regulating the winder tension
(PFAFF 3745 PREMIUM)

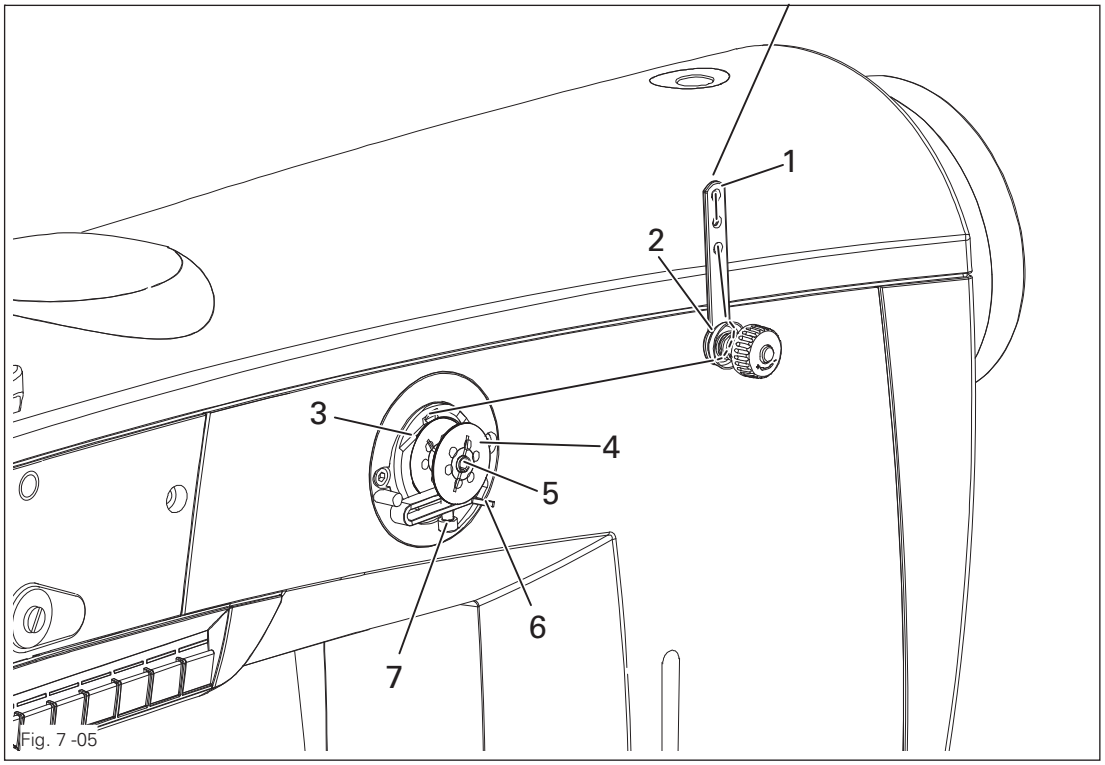

Fig. 7 -05

The requirement for the following steps is that the machine is in the production mode, see Chapter **9 Sewing**.

- Select the "winding" function.
- Pull the thread from the reel stand through guide **1** into bobbin winder tension unit **2** and then behind thread clamp **3**.
- Break off the thread in the thread clamp. The thread is then secured.
- Set the empty bobbin **4** on the bobbin winder spindle **5**.
- Press up lever **6** to switch on the bobbin winder.
- Enter or scan in the bobbin number.
  If no thread classification is required, enter the value "**0**".

After the bobbin number has been entered, the bobbin winder starts automatically and stops again, when bobbin **4** has been filled sufficiently.

- Remove the full bobbin **4** and break off the thread in the thread clamp.
- The tension of the thread on bobbin **4** can be set on the bobbin winder tension unit **2**.
- The thread amount on bobbin **4** can be adjusted with screw **7**.

3.07.06 Bobbin-changing/threading, and regulating the bobbin thread tension

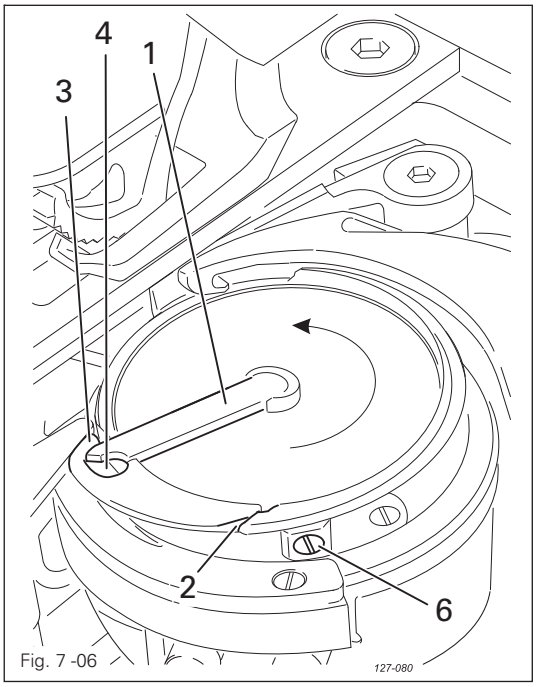

Fig. 7 -06

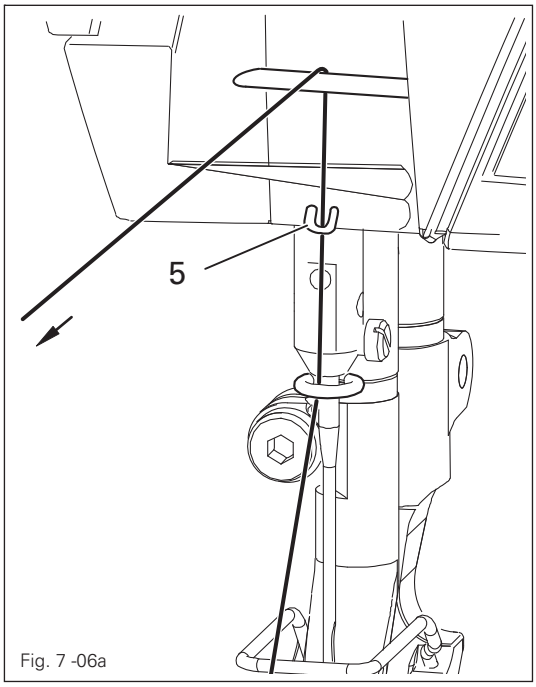

Fig. 7 -06a



Only change the bobbin when the threading aid is activated!
Danger of injury if the machine suddenly starts running!



- Activate the threading aid on the machine head by pressing the key.
- Press down the spring lock and open the bedplate slide.
- Raise latch **1** and remove the bobbin.
- Place the filled bobbin in the hook so that the bobbin turns in the direction of the arrow when the thread is pulled.
- Turn down latch **1**.
- Pull the thread through slot **2** to pull beak **3** into hole **4**.



- Call up the “tools” function.



- Call up the service menu.



- Select the "Thread force" function.
- Thread the bobbin thread through the sensor as shown in Fig. **7-06**a and pull it through evenly.
- Compare the displayed value with the standard value and, if necessary, adjust the bobbin thread tension accordingly with screw **6**.
- Close the bedplate slide.



- Switch off the threading aid on the machine head again by pressing the key.

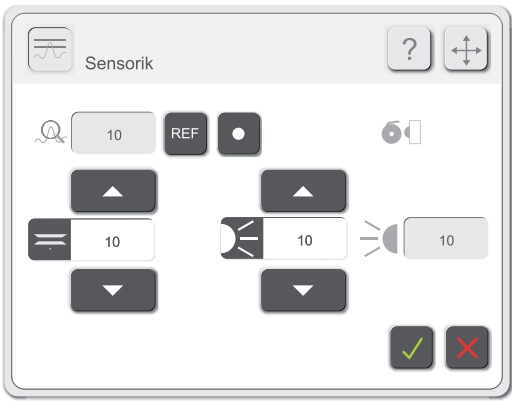

3.07.07 Threading the needle thread (PFAFF 3741 PLUS + 3745 PLUS)

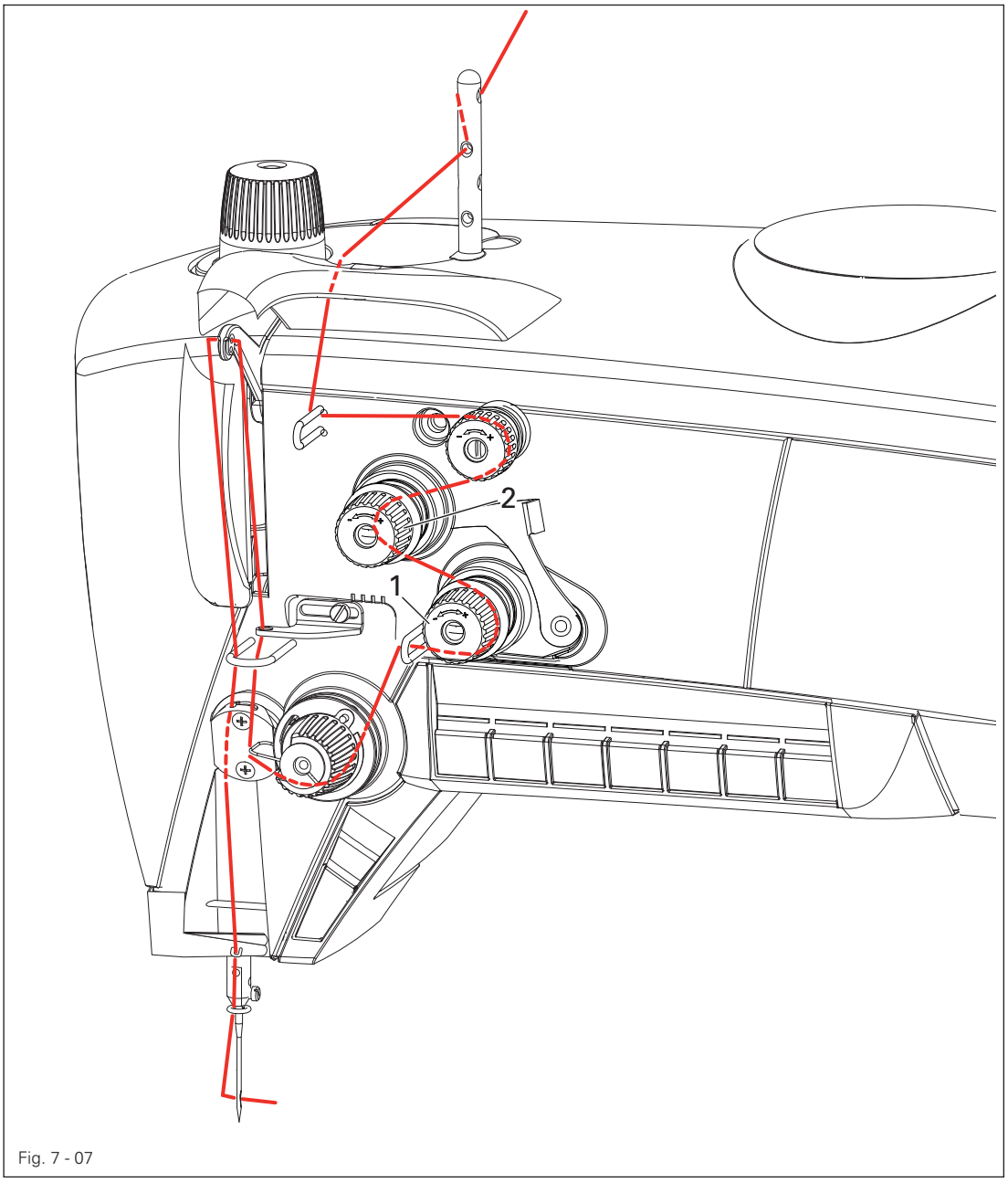

Fig. 7 - 07

Only thread the needle thread when the threading aid is activated!
Danger of injury if the machine suddenly starts running!

- Activate the threading aid on the machine head by pressing the key.
- Thread the needle thread as shown in Fig. **7 - 07**.
- Switch off the threading aid on the machine head again by pressing the key.

3.07.08 Threading the needle thread (PFAFF 3745 PREMIUM)

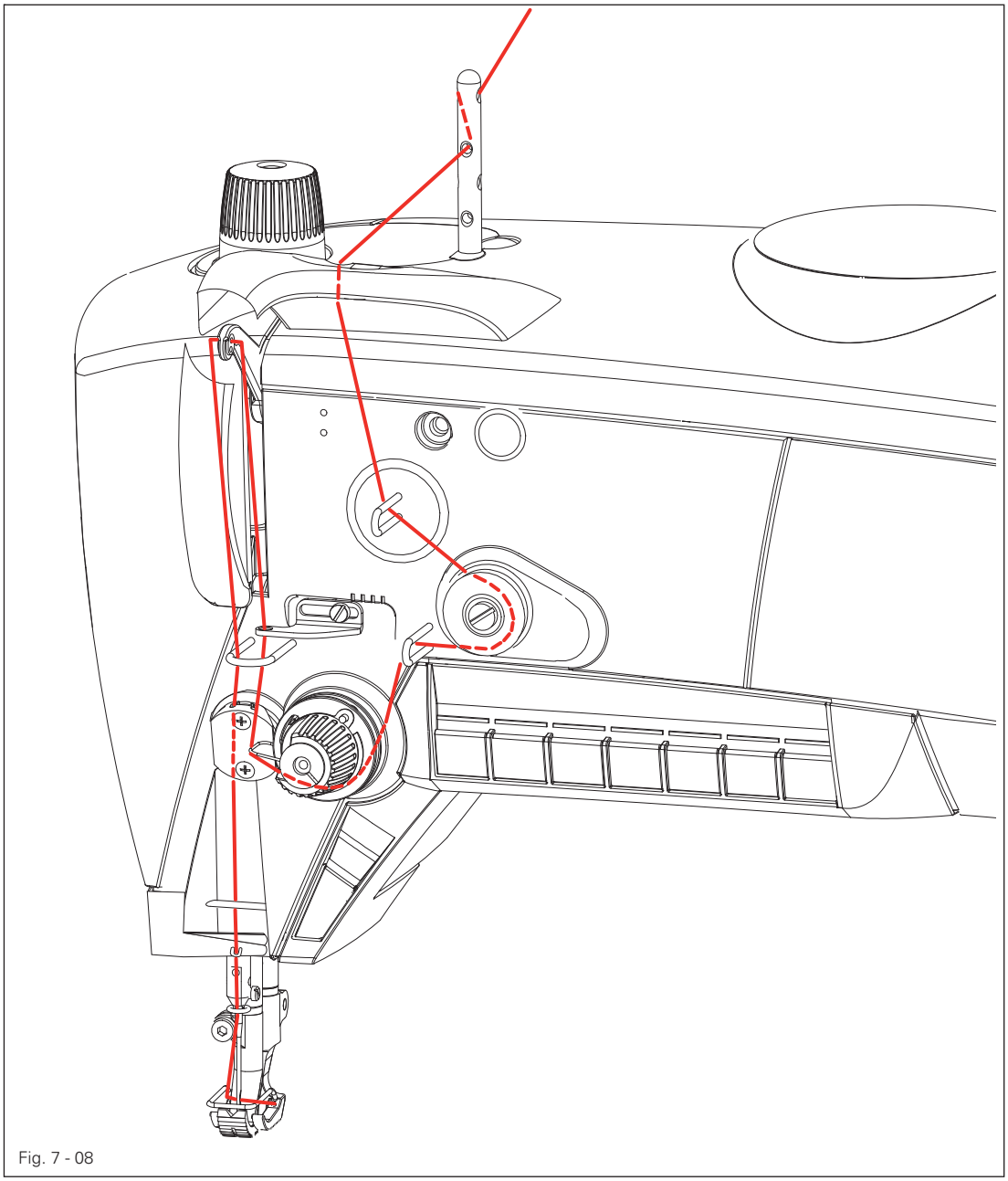

Fig. 7 - 08

Only thread the needle thread when the threading aid is activated!
Danger of injury if the machine suddenly starts running!

- Activate the threading aid on the machine head by pressing the key.
- Thread the needle thread as shown in Fig. **7** - **08**.
- Switch off the threading aid on the machine head again by pressing the key.

3.08 Sewing

The machine may only be operated by appropriately trained personnel! The operating personnel must ensure that only authorised persons are in the danger zone of the machine!

Following conditions must be fulfilled for sewing:

- All safety equipment must be attached, see Chapter **1.06** Danger warnings.
- The machine must be set up and commissioned in accordance with the set-up instructions.
- The setting up work must have been carried out, see Chapter **7** Setting up.

3.08.01 Calling up / carry out the sewing operation

(without camera for bobbin thread monitor)

After the user's log-in, following steps must be carried out:

- Call up the seam program selection function.

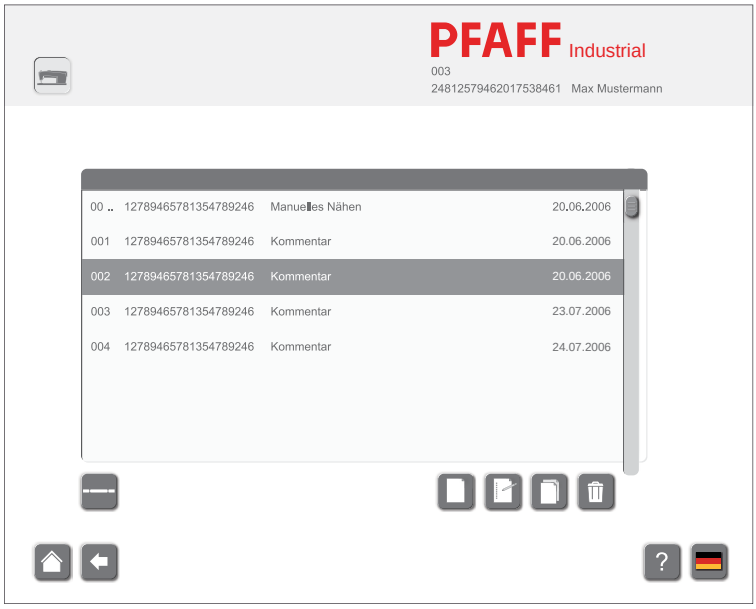

- Select the desired program from the list.

As an alternative to the manual seam program selection, the appropriate seam program can also be selected with the hand-held scanner, if a corresponding barcode is available.

- Call up the production function.
- Insert the material.
- Start the production process by operating the pedal.

3.08.02 Calling up / carry out the sewing operation

(with camera for bobbin thread monitor)

After the user's log-in, following steps must be carried out:



- Call up the seam program selection function.

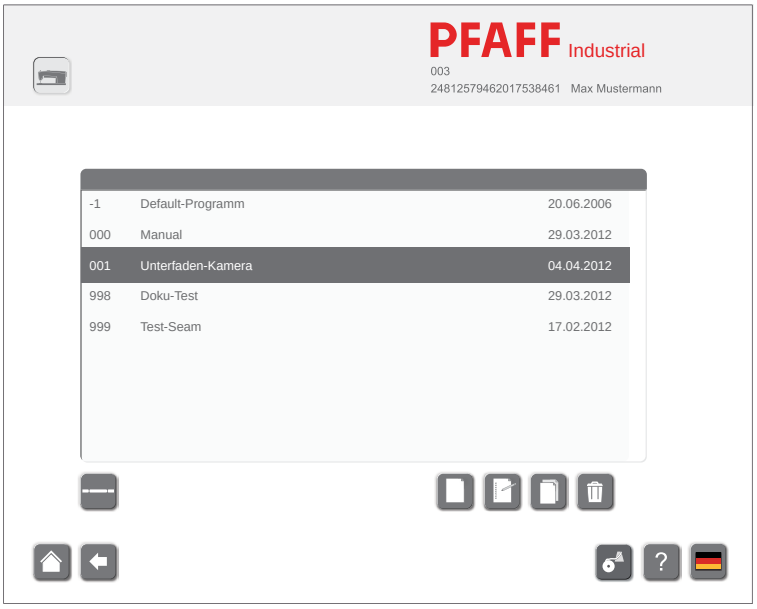

- Select the desired program from the list.



- The following message will be displayed on the monitor.

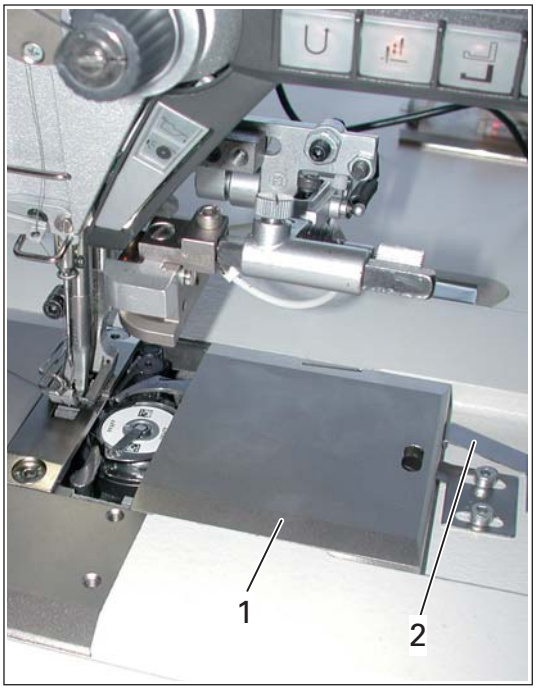

- Move bobbin cover 1 into reading position by retracting to spring plate 2).



- Confirm position.



- A green bar above the image means - reading process is under way.
- Turn bobbin as needed to allow reading of DATA Matrix code.
- A red bar above the image means - reading process is not under way (camera error or bobbin cover **1** not in reading position).

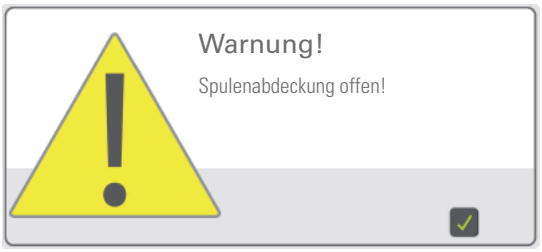

- Close bobbin cover **1.**

- Call up the production function.
- Insert the material.
- Start the production process by operating the pedal.

3.08.03 Regulating the needle thread tension (PFAFF 3741 + 3745 PLUS)



- Call up the seam program selection function.

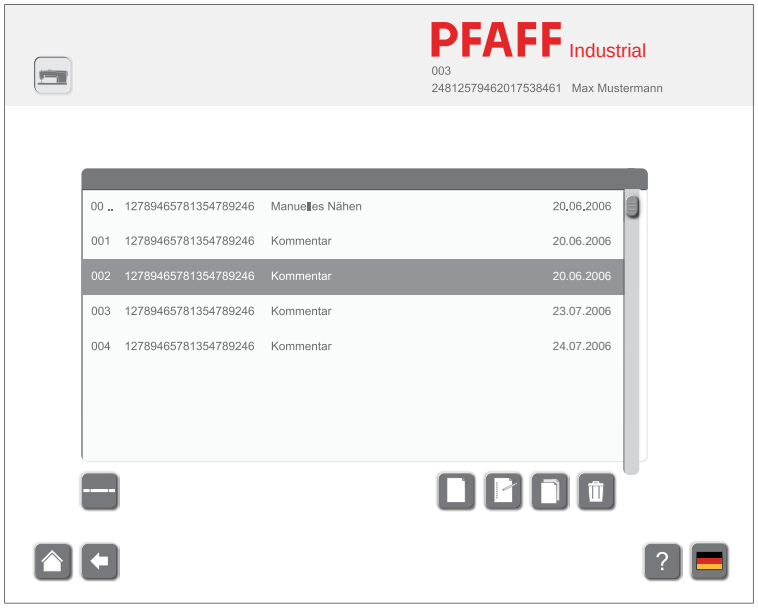

- Select the desired program from the list.



- Call up the production function.

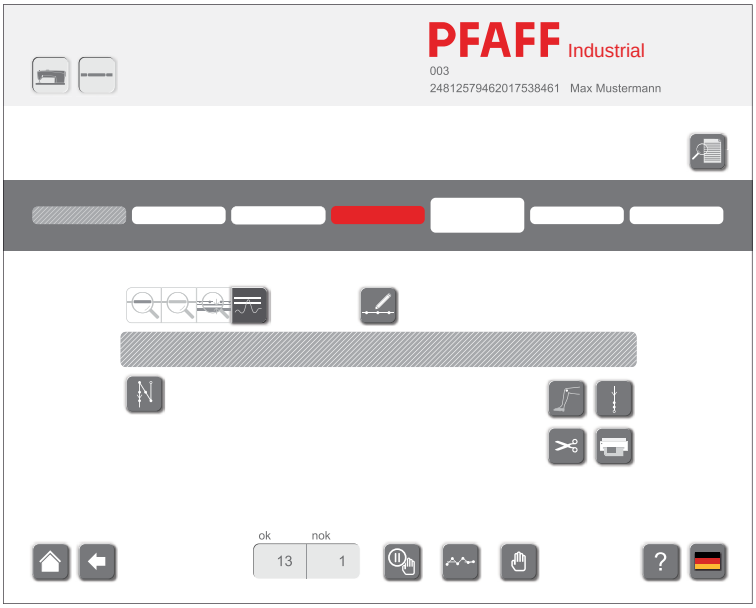



- Call up the function "Trial Seam".
- Insert the material.
- Create a trial seam.

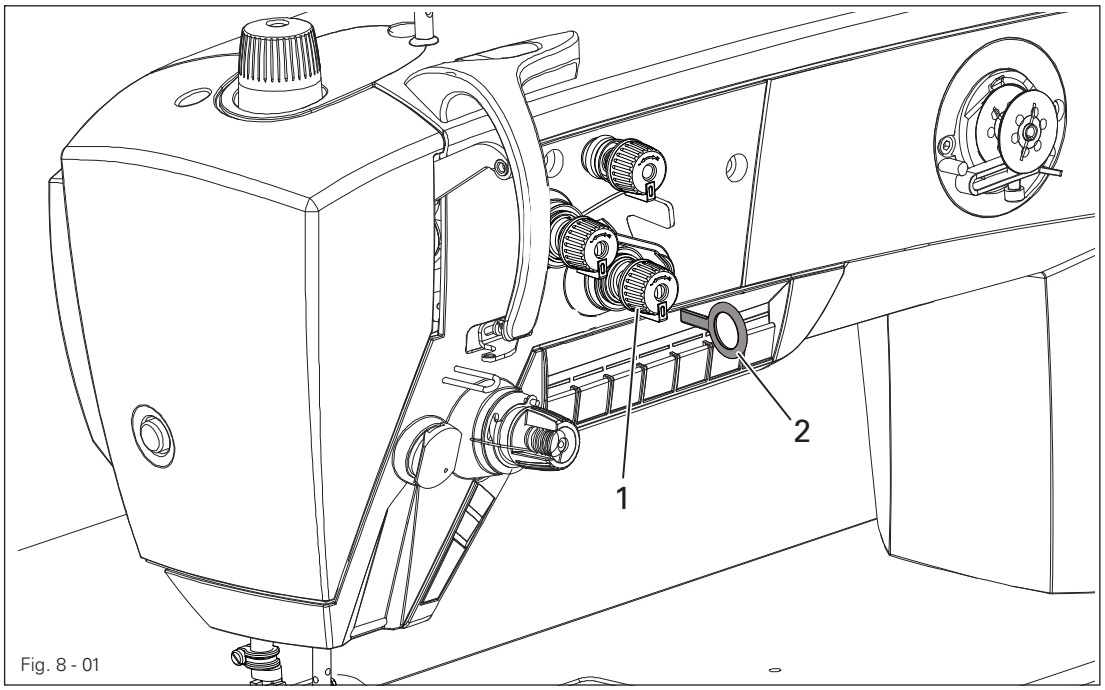

Fig. 8 - 01

- Set the adjustment nut **1** with an Allen key **2** so that the upper thread tension is set to the median value of the monitoring range.





- The new value is stored by pressing the button "Trial Seam" again.

3.08.04 Regulating the needle thread tension (PFAFF 3745 PREMIUM)



- Call up the seam program selection function.

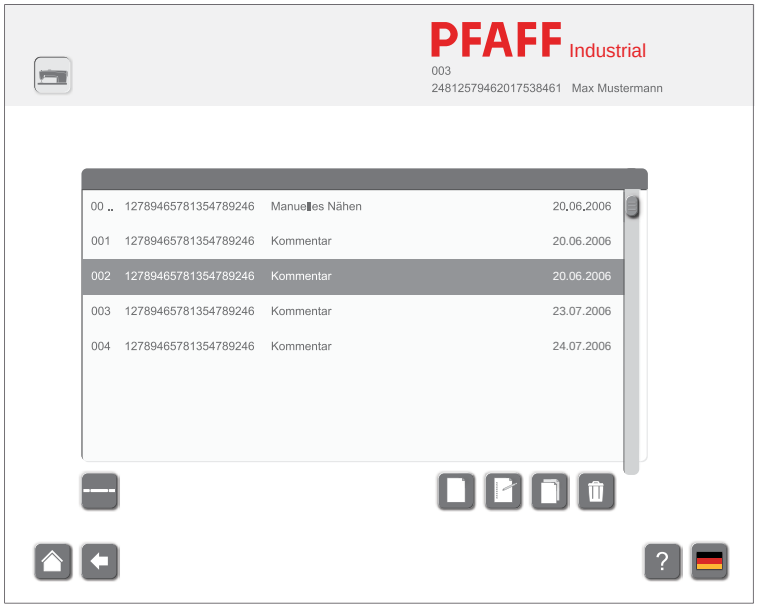

- Select the desired program from the list.



- Call up the production function.

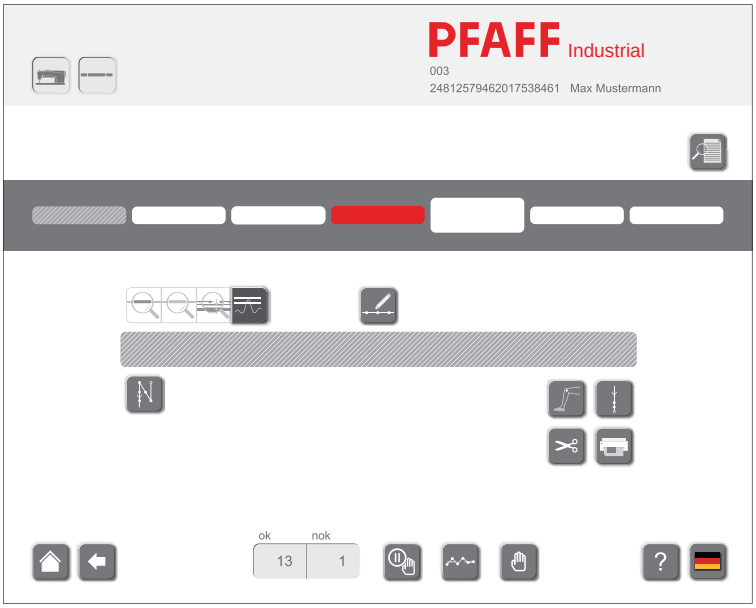



- Call up the function "Trial Seam".
- Insert the material.
- Create a trial seam.

- Set the value for the upper thread tension via the arrow keys **1**, so that the upper thread tension is set to the median value of the monitoring range.

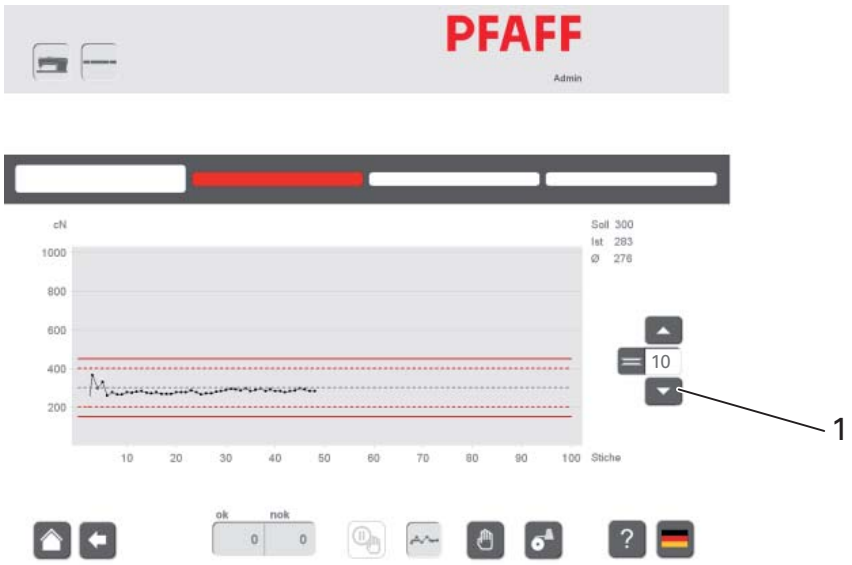



- The new value is stored by pressing the button "Trial Seam" again.

3.08.05 Description of the functions

After the production function has been selected, the following menu appears.

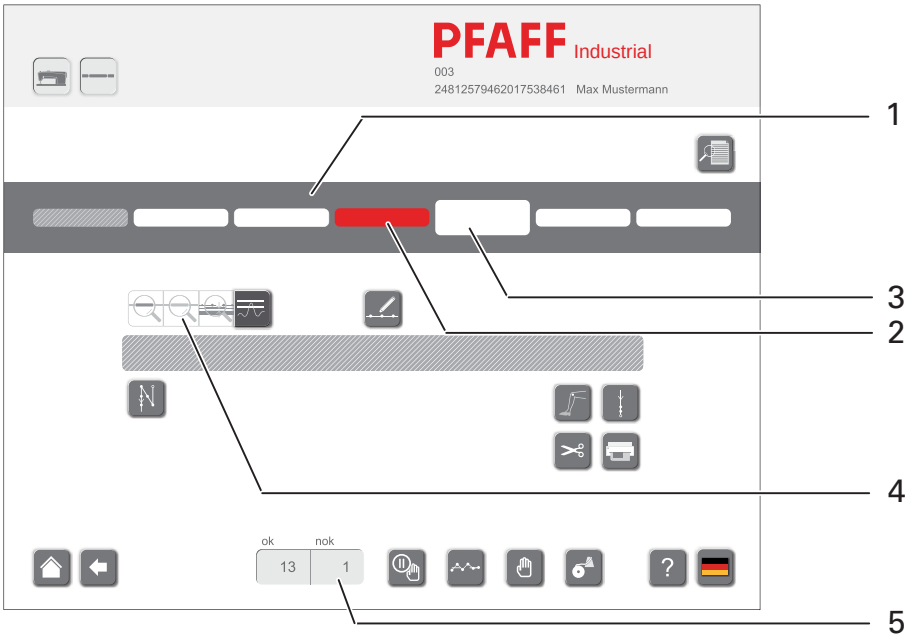

Work instructions

After this function has been selected, the work instructions for the selected seam program are displayed.

Display of the seam sectors

The seam sectors of the seam program are shown in sector **1.**
The docu-seam sector **2** is shown in red.
Seam sector **3** is the seam sector currently being processed.

Display of the monitoring functions

The symbols in sector **4** are used to shown the monitoring functions specified for the seam sector in the seam program. Inactive functions are shown in light grey. The following individual monitoring functions can be activated:

- Docu-seam sector
- Missed stitch detection
- Edge guide recognition (optional)

Thread force

After this function has been selected, the values for the set limit values of the thread strength and the tolerance range for missed stitches are shown.

Sewing parameters

After this function has been selected, the sewing parameters are displayed. The sewing parameters are specified during the seam program input, see Short Instructions for the input.

Action at beginning of the seam sector

The symbol shows the action at the beginning of the seam sector (here, for example, start bartacks). The action for the beginning of the seam sector is specified during the seam program input, see Short Instructions for the input.



End of the seam sector

The symbol shows the type of recognition at the end of the seam sector (here, for example, recognition through knee switch operation). The specification is made during the seam program input, see Short Instructions for the input.



Action at end of the seam sector

The symbol shows the action at the end of the seam sector (here, for example, condensed stitches). The action for the end of the seam sector is specified during the seam program input, see Short Instructions for the input.



Thread trimming on / off

This function is used to switch the thread trimming function at the end of the seam sector on or off.



Print label on / off

This function is used to switch the label printing function at the end of the seam sector on or off.



Selection of the operating mode

This function is used to call up the menu for selecting the operating mode.



Back

This function is used to call up the last level.

Display of the sewing results

In sector 5 both the number of good (“ok”) and bad (“nok”) seams are displayed.



Manual interruption

The seam cycle is interrupted. To continue the seam program, the seam sector can be re-selected.



Manual sewing

Sewing takes place without fixed seam sectors. The characteristics of the thread strength during sewing can be displayed (monitor on/off) and saved (frozen) temporarily as a snapshot.



Test seam

After this function has been selected, a test seam (simulated docu-seam) is sewn to check all specifications. No label is printed and no identification number is recorded in the database.



Bobbin winding (only on the PFAFF 3745 PREMIUM)

The winding operating is carried out, see Chapter 7.04 Winding the bobbin thread…



Help mode

After the help mode has been selected, the next function selected is described.



Choice of language

A menu for selecting the language setting is opened, see Chapter 7 Setting up in the instruction manual.

3.08.06 Concluding the sewing operation



- To end the sewing operation, call up the next level.
- Shut down the PC.
- Switch off the machine on the power bar and at the main switch.

3.09 Care and maintenance

3.09.01 Servicing and maintenance intervals

Clean the hook compartment	Daily, several times if in continuous use
Check the oil level	Daily, before starting the machine
Check/adjust the air pressure	Daily, before starting the machine
Clean the filter of the air filter/lubricator	As required



These maintenance intervals are calculated for the average running time of a single shift operation. If the machine is operated more than this, shorter intervals are recommended.

3.09.02 Cleaning the machine

The cleaning cycle required for the machine depends on following factors:

- Single or several shift operation
- Amount of dust resulting from the workpiece

It is therefore only possible to stipulate the best possible cleaning instructions for each individual case.



For all cleaning work the machine must be disconnected from the mains by switching off the on/off switch or by removing the mains plug!
Danger of injury if the machine suddenly starts up .



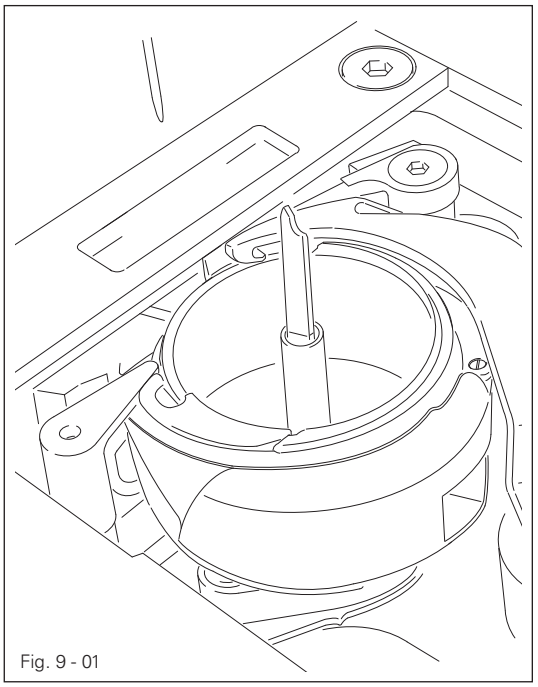

Fig. 9 - 01

To avoid breakdowns, the following cleaning work is recommended for single shift operation:

- Open the bed slide and remove the bobbin.
- Clean the hook and hook compartment daily, several times if in continuous use.
- Set the bobbin in position and close the bed slide.

3.09.03 Lubricating

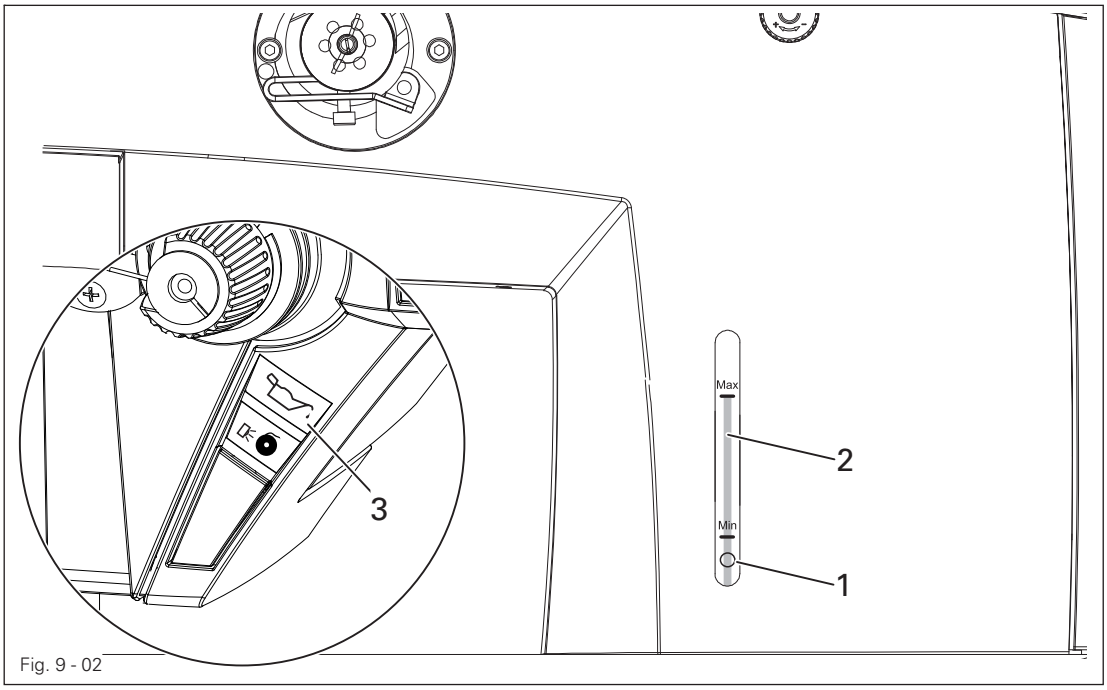

Fig. 9 - 02

Before commissioning the machine, fill in oil through hole **1** until the oil level indicator **2** is at the "MAX" marking.

The oil level is controlled by sensor.
When the minimum oil level is reached, key **3** on the machine head shines red
If required, fill oil into the tank through hole **1**.
Oil level indicator **2** must not exceed the "**MAX**" marking.

Only use oil with a medium viscosity of **22.0 mm²/s** at **40° C** and a density of **0.865 g/cm³** at **15°C**!

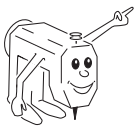

We recommend PFAFF sewing-machine oil, part No. **280-1-120 144**.

3.09.04 Checking/regulating the air pressure

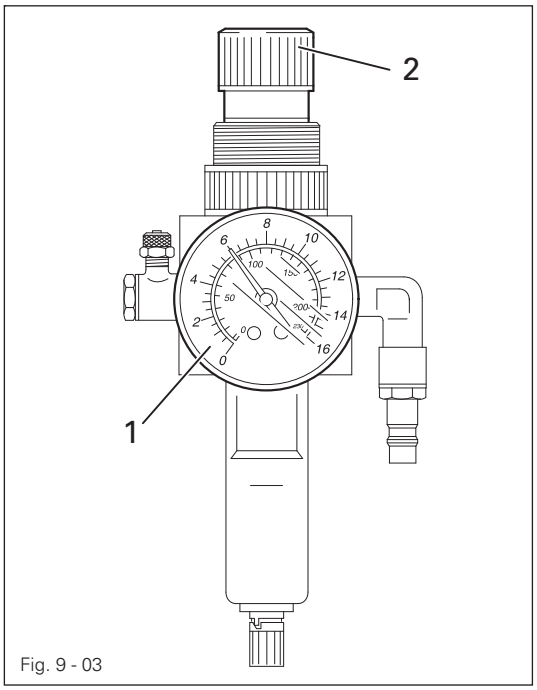

Fig. 9 - 03

- Check the air pressure on gauge **1** every time before operation.
- Gauge **1** must show a pressure of **6** bar.
- Regulate this pressure if required.
- To do so, pull knob **2** up and turn it accordingly.

3.09.05 Emptying/cleaning the water bowl of the air filter/regulator

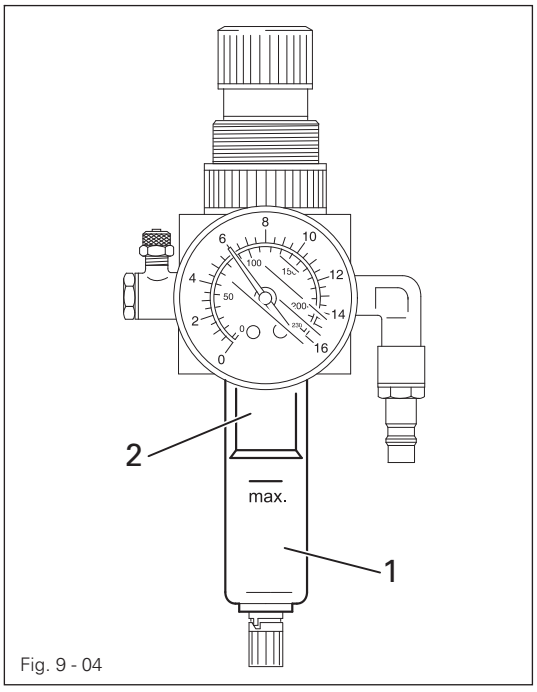

Fig. 9 - 04



Switch off the machine.
Disconnect the air hose at the air filter/regulating unit.

Emptying the water bowl

- Water bowl **1** empties itself automatically when the air hose is disconnected from the air filter/regulator.

Cleaning the filter

- Unscrew water bowl **1** and take out filter **2**.
- Clean the filter with compressed air or with isopropyl-alcohol, part number **95-665735-91**.
- Screw in filter **2** and screw on water bowl **1**.

3.10 Wearing parts

This is a list of the most important wearing parts.
A detailed parts list for the complete machine is included with the accessories. In case of loss, the parts list can be downloaded from the internet address **www.pfaff-industrial.com/pfaff/de/service/downloads** As an alternative to the internet download the parts lists can also be ordered in book form under part no. **296-1**2-19 008.

PFAFF 3741

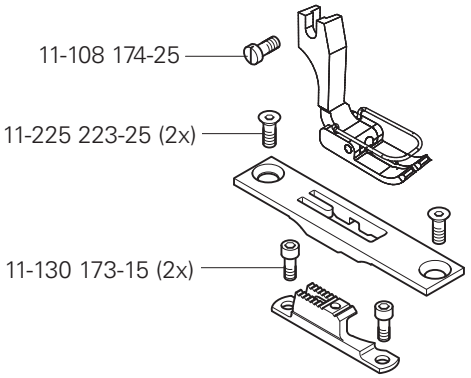

PFAFF 3745

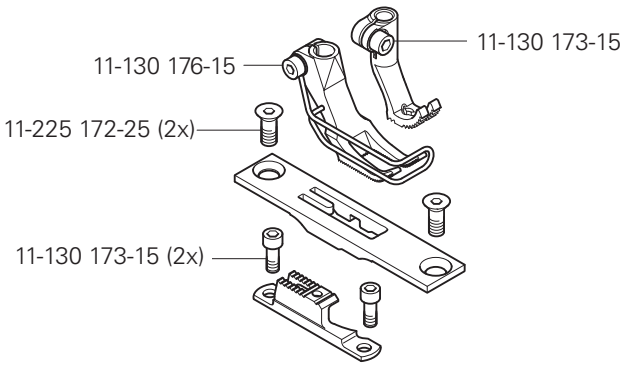

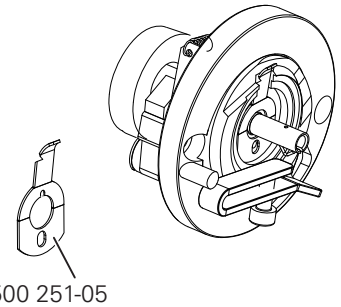

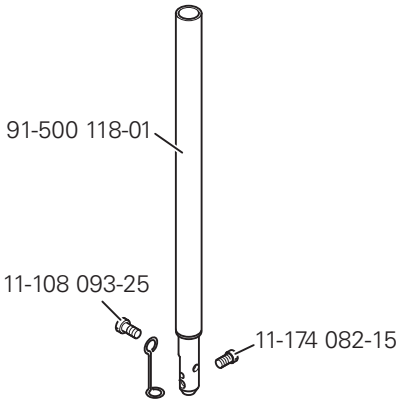

-900/81

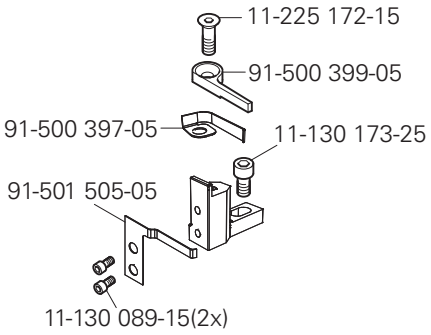



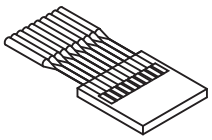

System 134 - 35

PFAFF 3745 PREMIUM

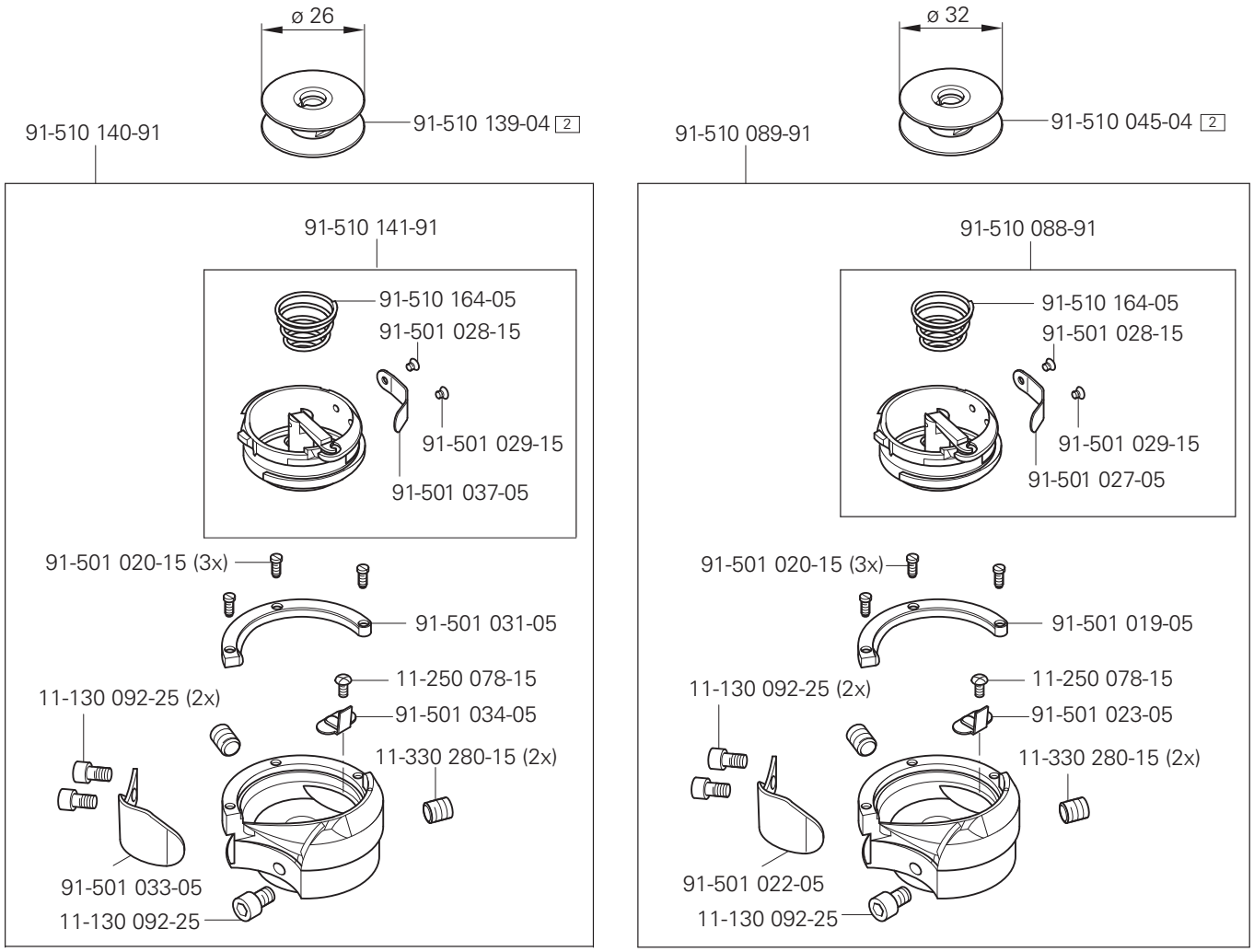

2 Marking (dots, strokes or numbers) to be stated on order.

PFAFF 3745 PLUS

PFAFF 3745 PLUS

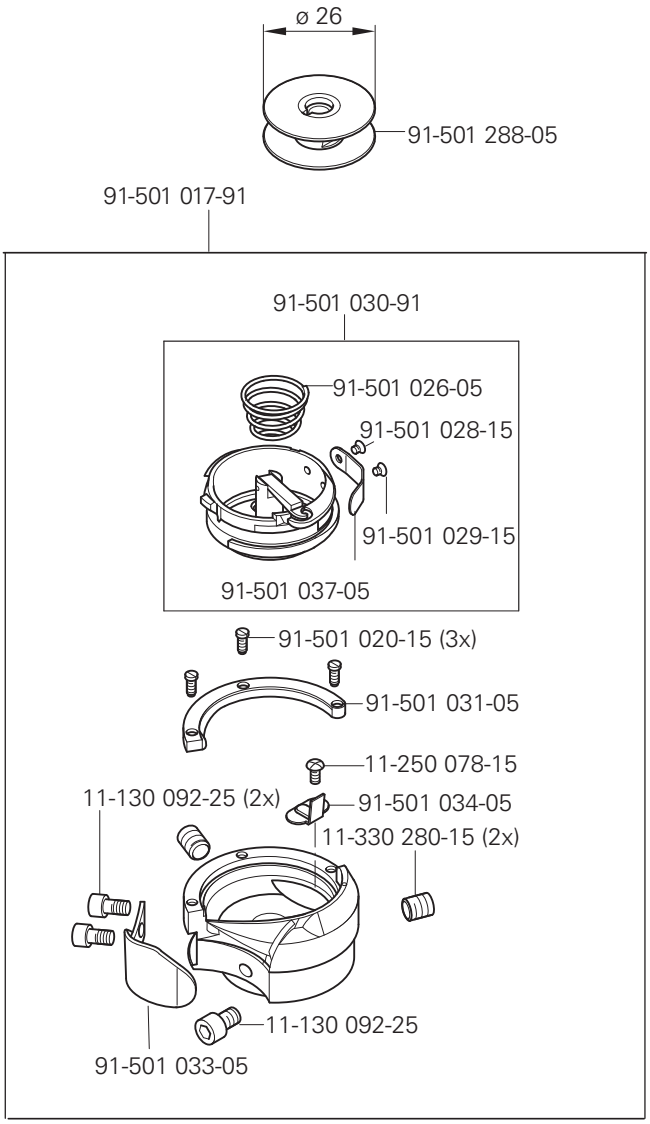

PFAFF® Industrial

POWERLine

3741

ADJUSTMENT MANUAL

This instruction manual applies to
machines from software version **1.8** and
serial number **2 763 625** onwards

Justieranleitung engl. 06.12

4 Adjustment



Please observe all notes from Chapter **1 Safety** of the instruction manual!
In particular care must be taken to see that all protective devices are refitted properly after adjustment, see Chapter **4.06 Danger warnings** of the instruction manual!



If not otherwise stated, the machine must be disconnected from the electrical power supply. Danger of injury due to unintentional starting of the machine!

4.01 Notes on adjustment

All following adjustments are based on a fully assembled machine and may only be carried out by expert staff trained for this purpose.
Machine covers, which have to be removed and replaced to carry out checks and adjustments, are not mentioned in the text.
The order of the following chapters corresponds to the most logical work sequence for machines which have to be completely adjusted. If only specific individual work steps are carried out, both the preceding and following chapters must be observed.
Screws, nuts indicated in brackets ( ) are fastenings for machine parts, which must be loosened before adjustment and tightened again afterwards.

4.02 Tools, gauges and other accessories for adjusting

- Screwdrivers with blade width from **2** to **10 mm**
- Spanners (wrenches) with jaw width from **7** to **14 mm**
- **1** set Allen keys from **1.5** to **6 mm**
- Metal rule (part No. **08-880 218-00**)
- Sewing thread and test materials

4.03 Abbreviations

t.d.c. = top dead centre
b.d.c. = bottom dead centre

4.04 Explanation of the symbols

In this adjustment manual, symbols emphasize operations to be carried out or important information. The symbols used have the following meaning:



Note, information

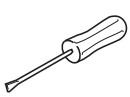

Service, repair, adjustment, maintenance
(work to be carried out by qualified staff only)

4.05 Adjusting the basic machine

4.05.01 Basic position of the balance wheel (adjustment aid)

Requirement
When the needle bar is positioned at t.d.c., the marking "**0**" on the scale should be level with the top edge of the belt guard (see arrow).

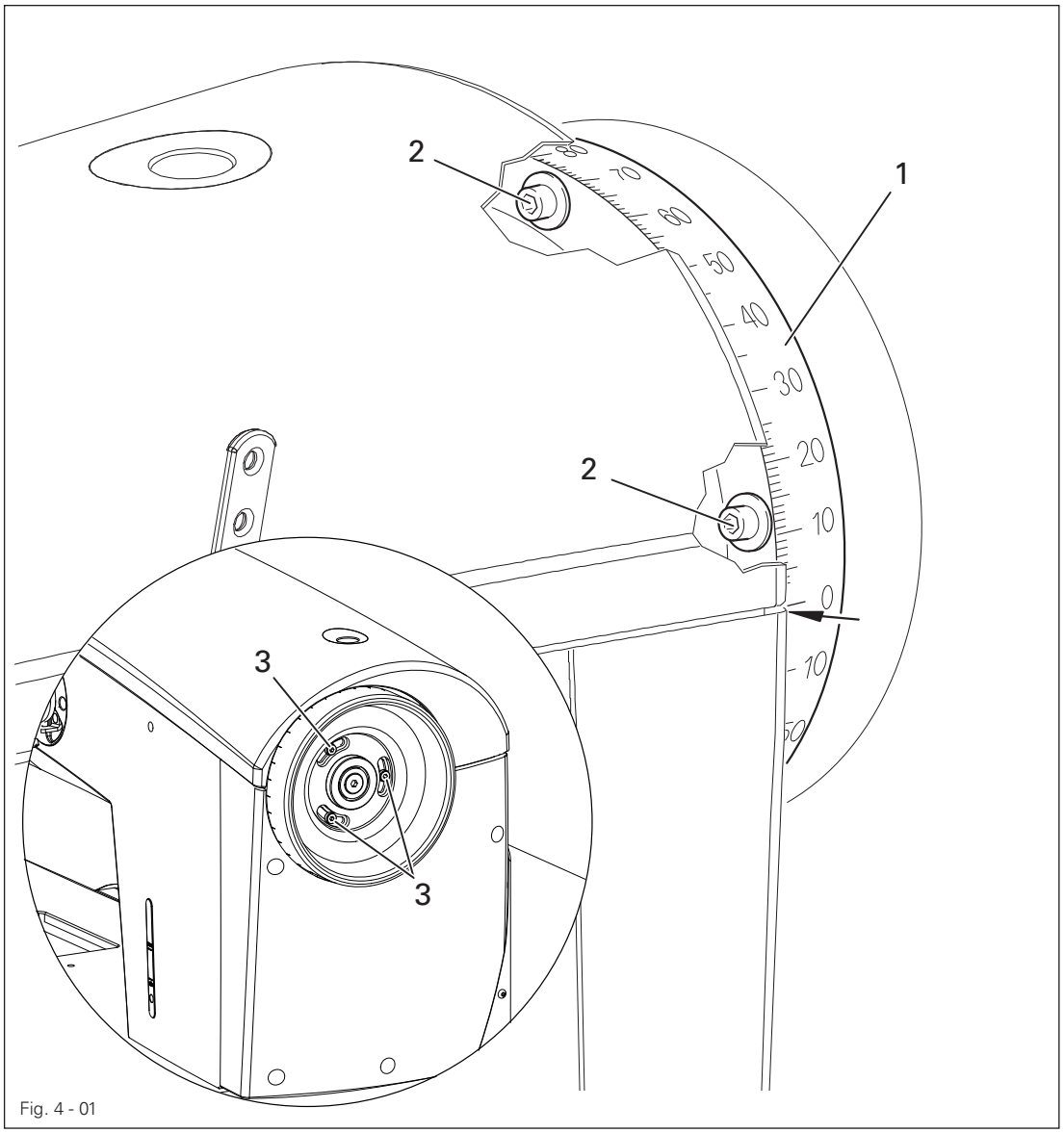

Fig. 4 - 01

- Adjust the scale dial **1** (depending on model screws **2** or **3**) in accordance with the requirement.

4.05.02 Zero position of the bottom and needle feed

Requirement

At stitch length setting "**0**"

1. turning the handwheel, the bottom transporter and the needle bar should not move, and
2. the bolt of lever **7** should be set to the middle position of recess **8**.
3. A gap of **0.3 mm** should exist between initiator **5** and switching plate **4**.

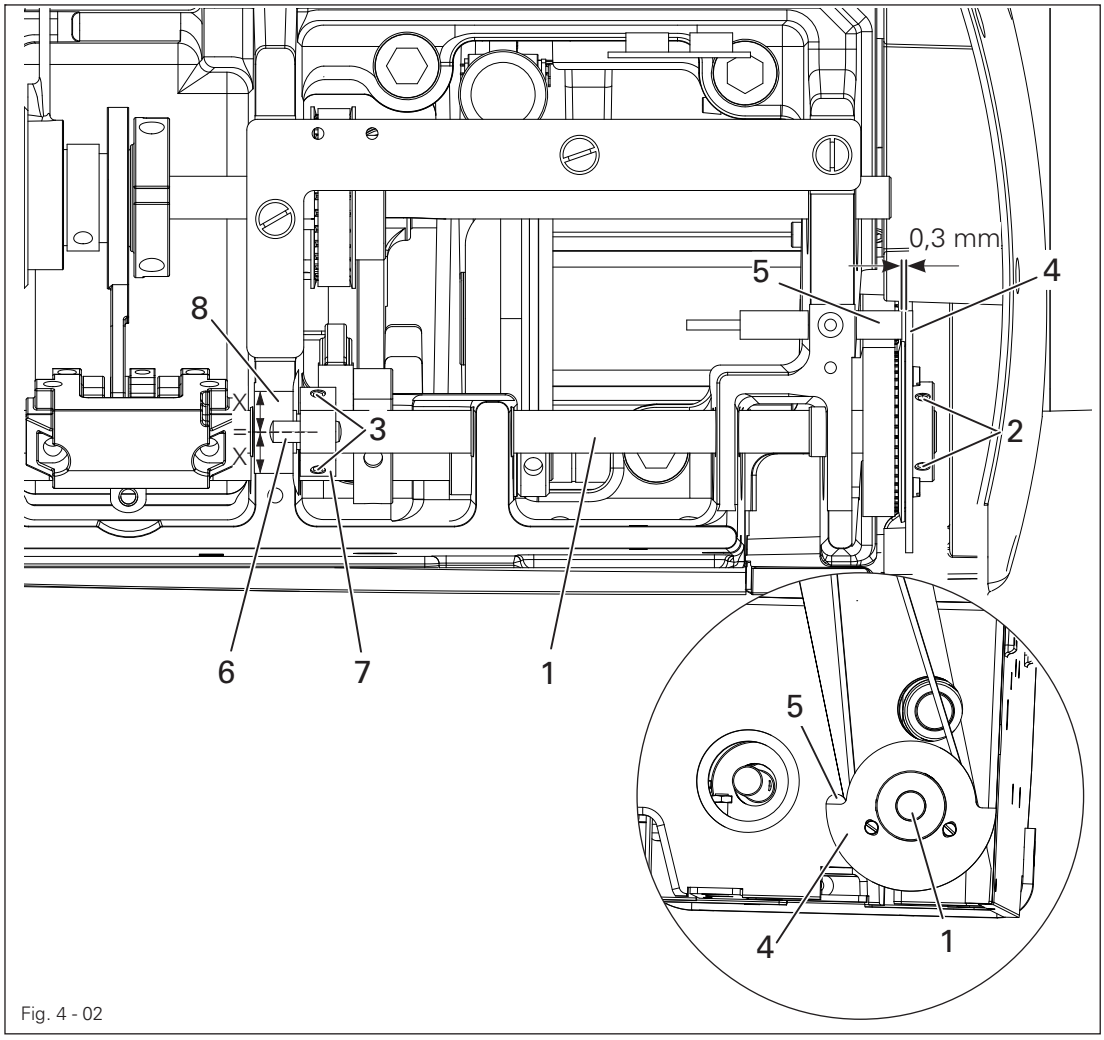

Fig. 4 - 02

- Turn machine on, stitch platen motor moves to reference position.
- Turn shaft **1** of the stitch platen (screws **2** and **3**) in accordance with requirement **1**.
- Move switching plate **4** in accordance with rule **3** and tighten screws **2**.
- Set bolt **6** of lever **7** to the middle of recess **8**, and tighten screws **3**.
- Check rule settings and adjust where required.

4.05.03 Feed dog motion of bottom feed dog and needle feed

Requirement
Bottom transporters, as well as the needle bar should not move, when stitch platen **3** is activated with handwheel at **190°** or higher.

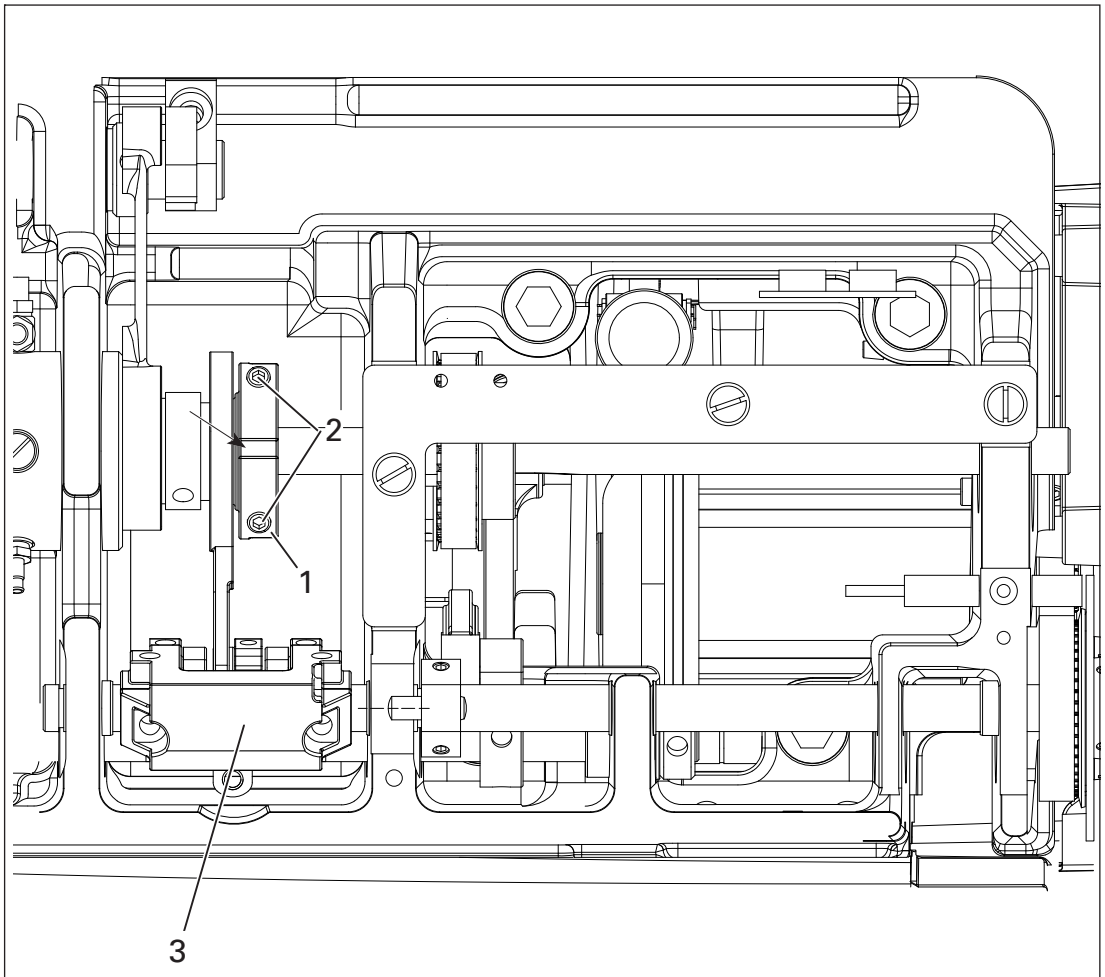

Fig. 4 - 03

- Adjust eccentric **1** (screws **2**) in accordance with the requirement. Make sure that the cut-out (see arrow) is visible.

4.05.04 Feeding motion of the bottom feed dog

Requirement
When the balance wheel is positioned at **180°**, the feed dog should be at t.d.c.

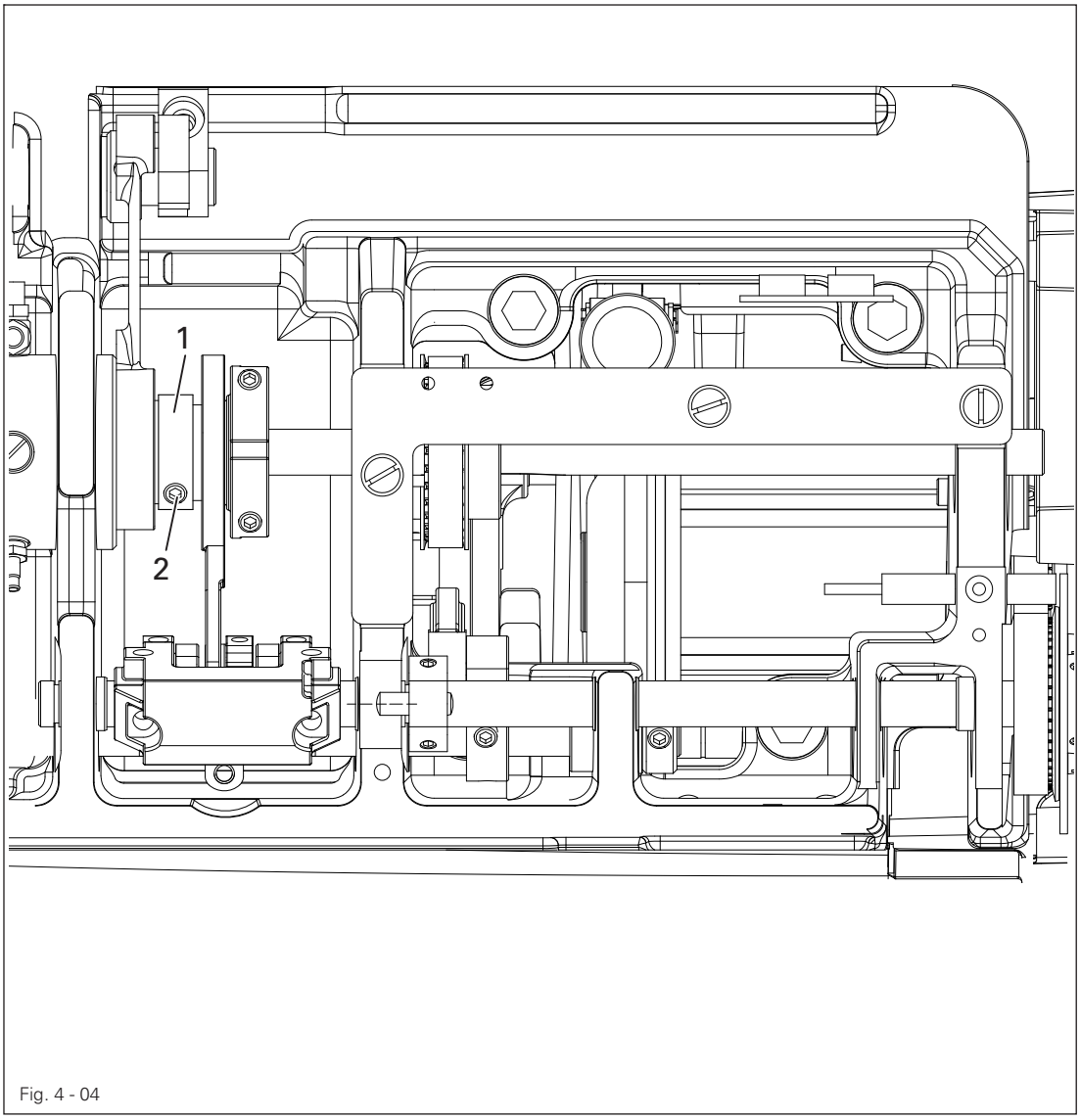

Fig. 4 - 04

- Adjust eccentric **1** (screws **2**) in accordance with the requirement.

4.05.05 Height of the bottom feed dog

Requirement

1. When the needle bar is positioned at b.d.c. (balance wheel position **180**°), the bottom feed dog should be positioned **0.5** mm horizontally above the top edge of the needle plate, when crank **6** is in the centre of the slot.
2. The bottom feed dog should be positioned in the centre of the needle plate slot.

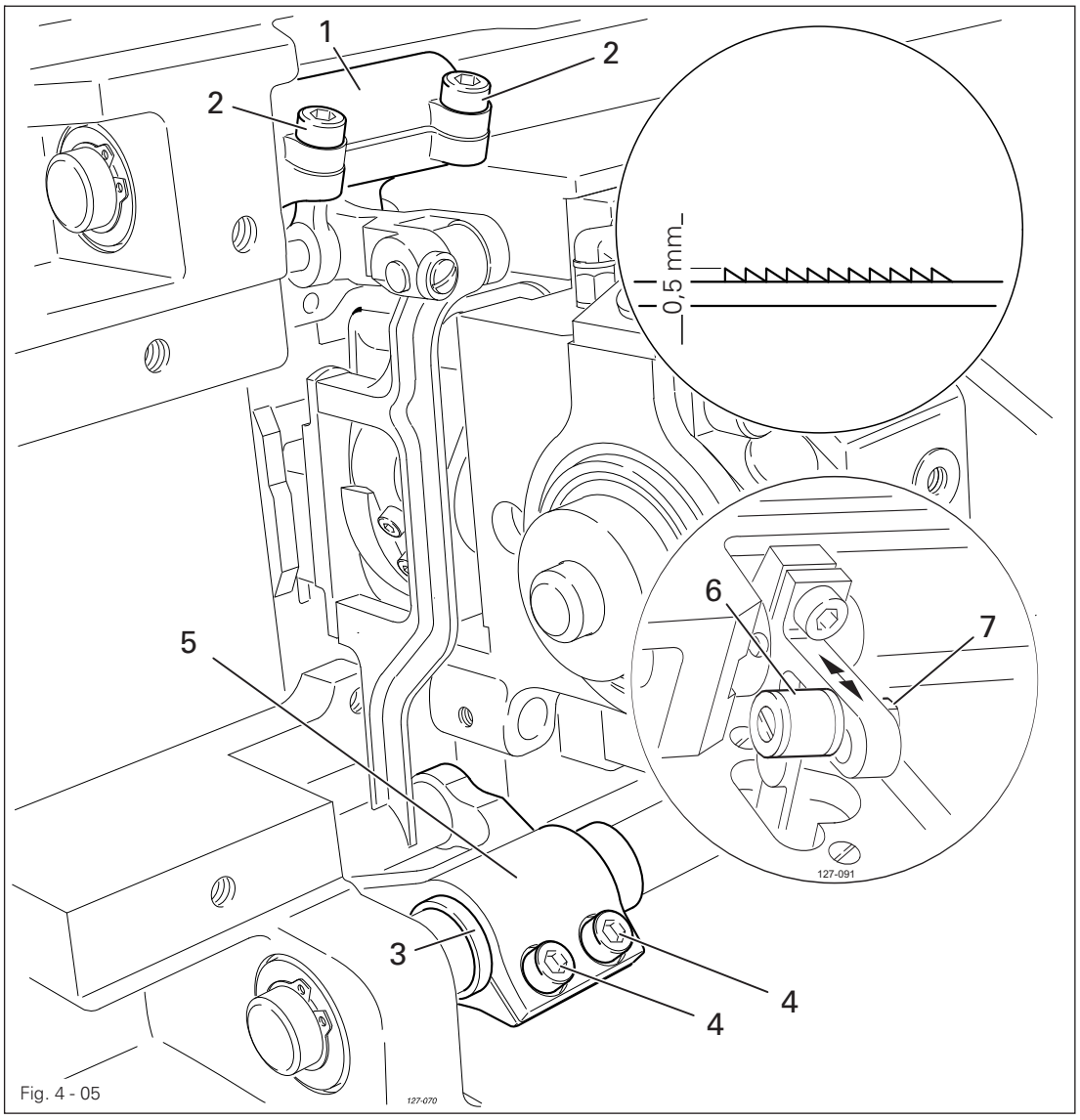

Fig. 4 - 05

- Turn lifting crank **1** (screws **2**) in accordance with requirement **1**.
- Adjust eccentric sleeve **3** and feed bar **5** (screws **4**) in accordance with requirement **2**

The height of the bottom feed dog can be increased or reduced by moving crank **6** (nut **7**) up or down.

4.05.06 Feeding stroke difference

Requirement
With the maximum stitch length set, when the balance wheel is turned the feeding strokes of the needle and the bottom feed dog should be the same.

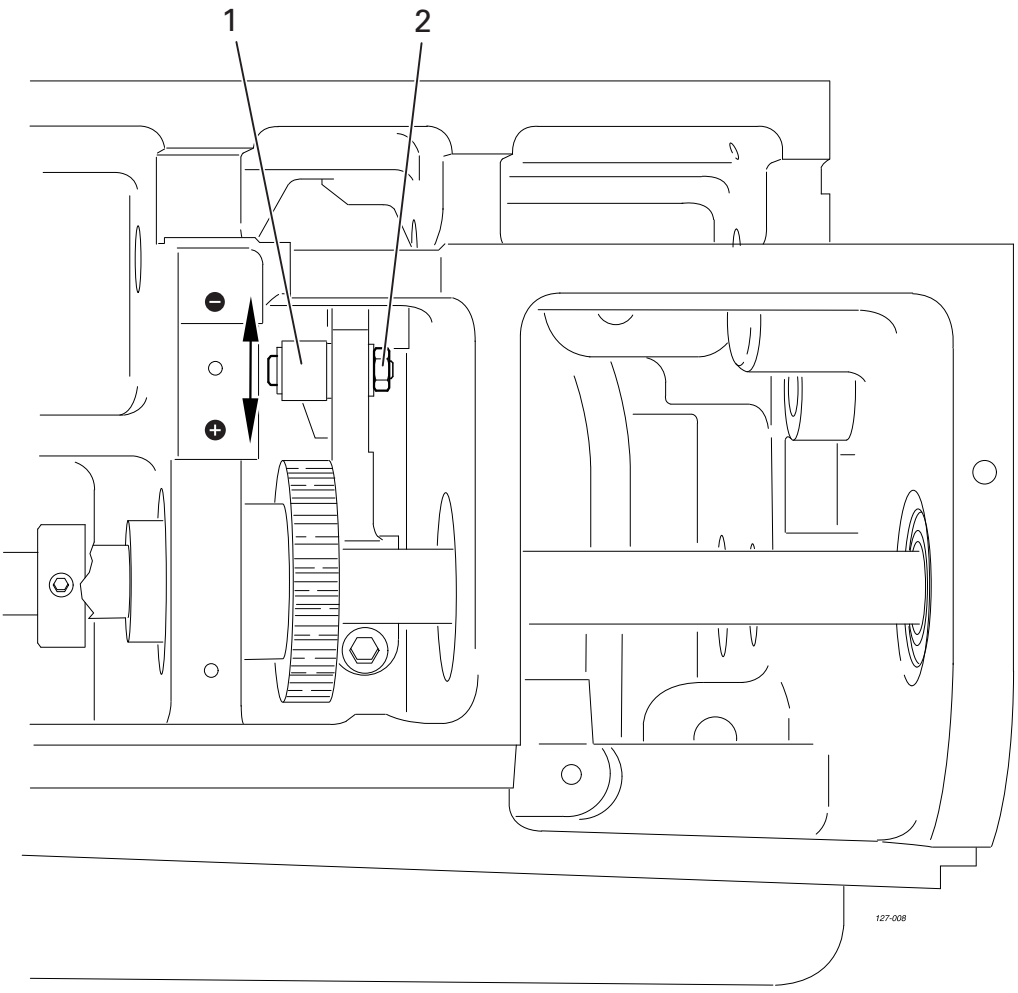

Fig. 4 - 06

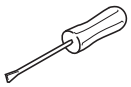

- With connecting rod **1** (nut **2**) increase ("+") or reduce (-) the needle feed stroke in accordance with the requirement.

4.05.07 Preliminary adjustment of the needle height

Requirement
When the needle bar is positioned at t.d.c. (balance wheel position 0°), the clearance between the needle point and the needle plate should be 22 mm.

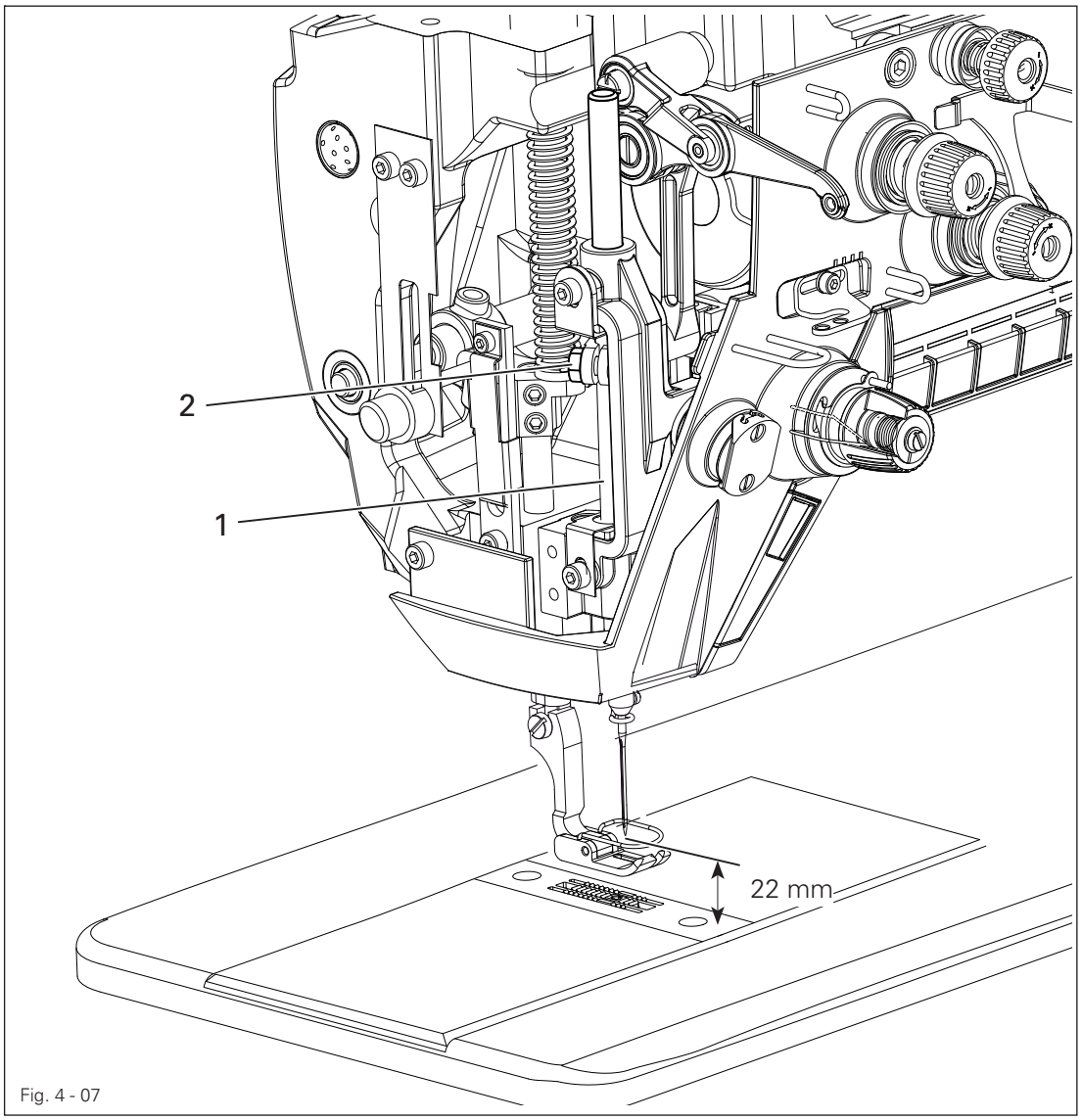

Fig. 4 - 07

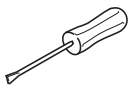

- Without turning it, re-position needle bar 1 (screw 2) in accordance with the requirement.

4.05.08 Needle rise, hook clearance, needle height and bobbin case position finger

Requirement

For stitch length setting "**4.0**" and needle bar position **2.0 mm** to u.T.

(= handwheel position **202°**):

1. The hook point should be positioned at needle centre with a needle cut clearance of **0.05** – **0.10** mm.
2. The top of the needle eye should be positioned **0.8** mm below hook point **6**.
3. Needle guard **7** should slightly touch the needle.

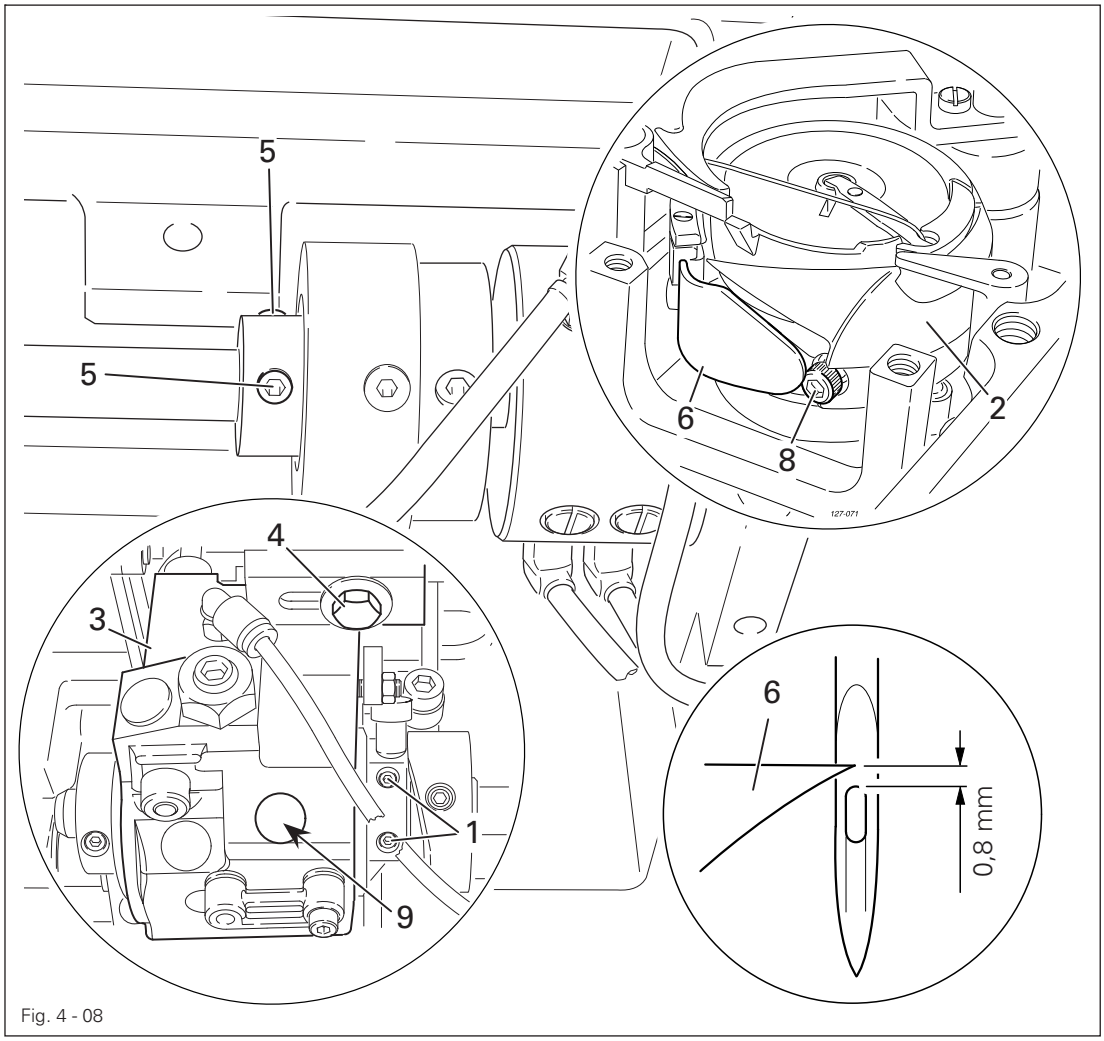

Fig. 4 - 08

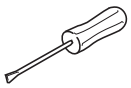

- Loosen both screws of the gear drive of hook **1** (under cover **2**).
- Adjust hook **1** and hook bearing **3** (screws **4** and **5**) in accordance with requirement **1**.
- Without turning it, re-position the needle bar in accordance with the requirement **2**, also see Chapter **4.05.08** Preliminary adjustment of the needle height.
- Adjust needle guard **7** (screw **8**) in accordance with requirement **3**.
- Set a low cog clearance for screw **9**.



If the needle size is changed, a quick adjustment of hook bearing **3** is possible, after loosening screws **4** and **5**.

4.05.09 Bobbin case opener

Requirement

1. When turning the handwheel, the horn **4** should be lifted off the stitch platen **5** on the right turning point of the bobbin lift **1** by the thread thickness.
2. Bobbin lift upper edge, and lower bobbin upper edge should be at same level.
3. Bobbin lift **1** should be in the right turning point at handwheel position "**300°**".
4. Screw **7** to the return spring of the bobbin lift should be positioned approx. **10 mm** above the lock nut **8**.

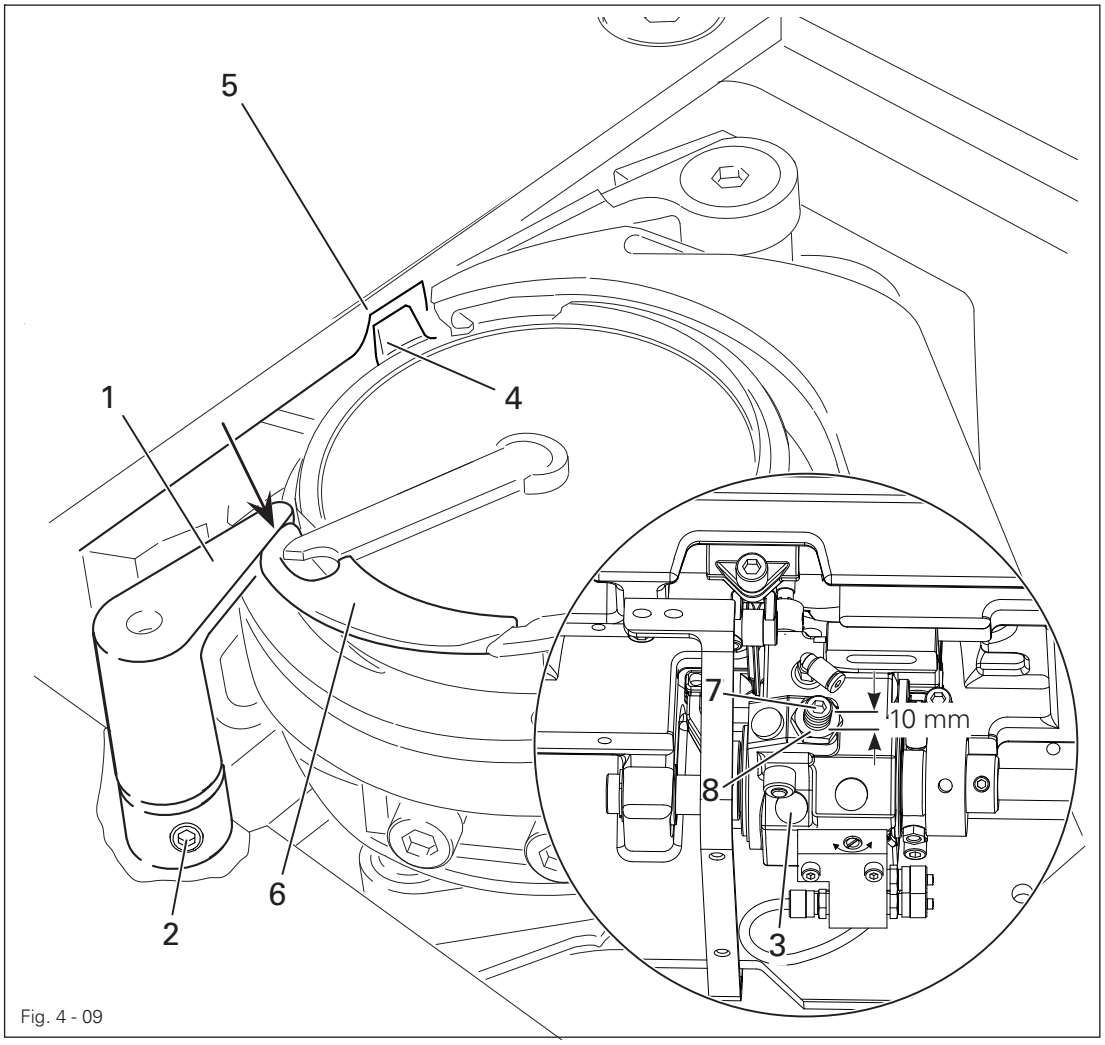

Fig. 4 - 09

- Bobbin lift **1** (screw **2**) must be turned and moved according to **requirements 1** and **2**.
- Excenter (screw under cover **3**) must be turned in accordance with **requirement 3**.
- Adjust screw **7** (nut **8**) in accordance with **requirement 4**.

The thread must be able to pass unhindered between bobbin case opener **1** and bobbin case **6**

4.05.10 Bobbin winder

Requirement

1. When the bobbin winder is engaged, the winding spindle must be driven reliably. When it is disengaged, friction wheel **3** should not be touching drive wheel **1**.
2. When it is switched off, the bobbin winder must click securely into its end position (knife raised).

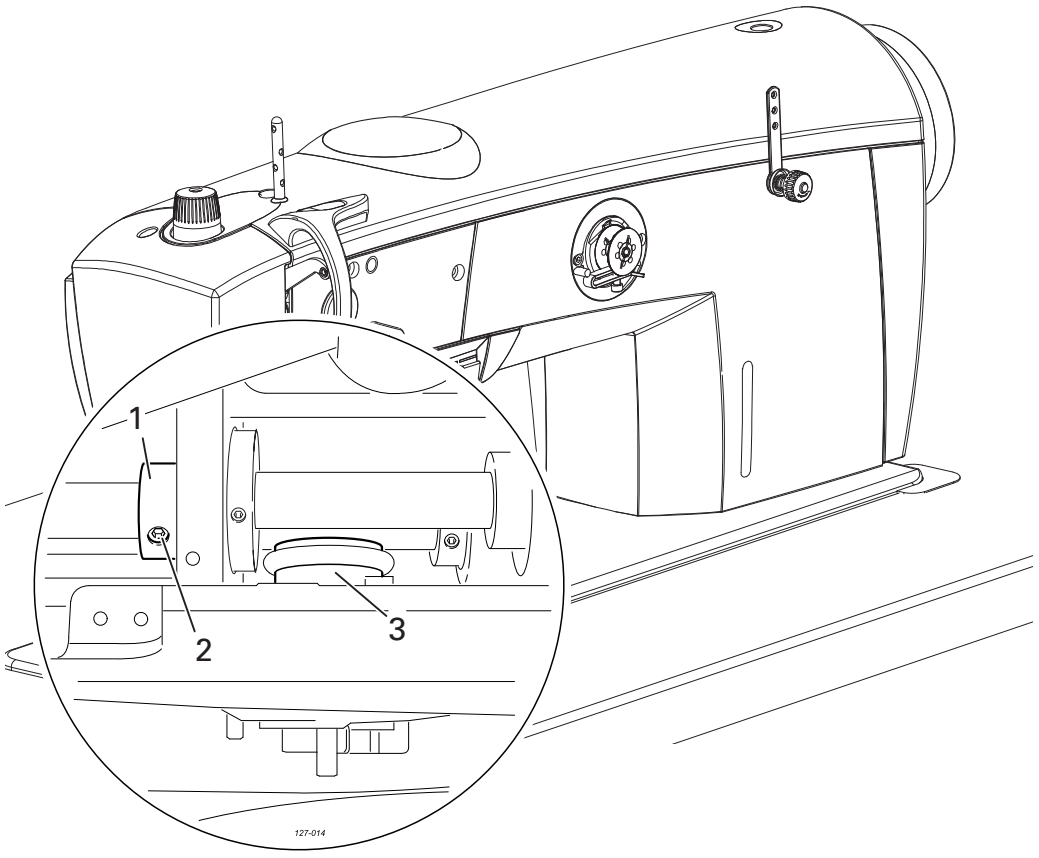

Fig. 4 - 10

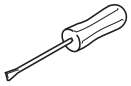

- Adjust drive wheel **1** (screw **2**) in accordance with the **requirement**.

4.05.11 Thread check spring and thread regulator

Requirement

1. The movement of thread regulator **3** must be completed when the needle point enters the material (spring stroke approx. **7 mm**).
2. When the thread loop is at its largest while being passed around the hook, the check thread spring **3** should rise slightly from the rest **1**.

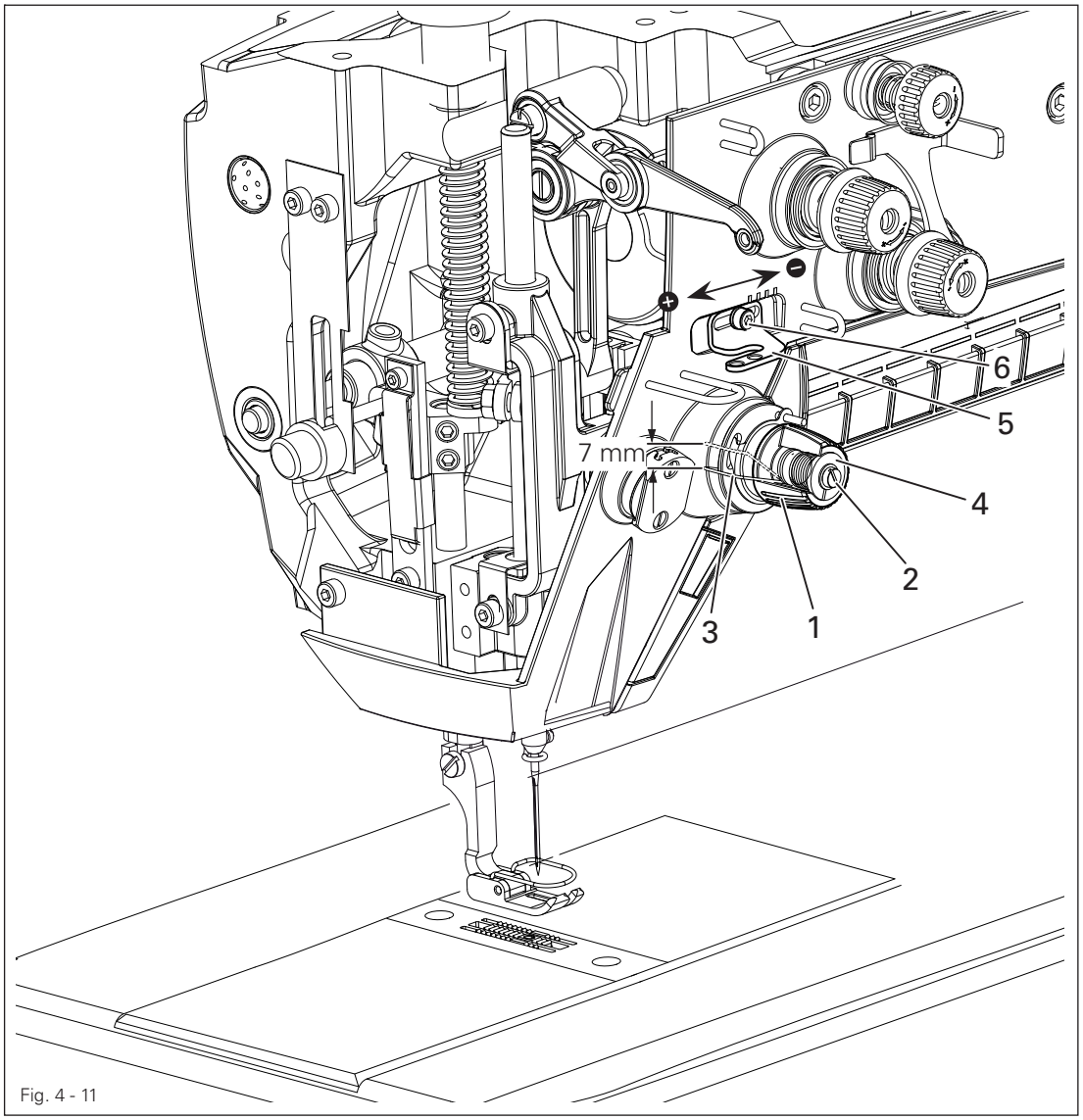

Fig. 4 - 11

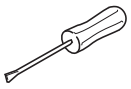

- Position rest **1** (screw **2**) in accordance with requirement **1**.
- Turn sleeve **4** (screw **2**) to adjust the tension of thread check spring **3**.
- Position thread regulator **5** (screw **6**) in accordance with requirement **2**.



For technical reasons it may be necessary to deviate from the indicated spring stroke or spring tension.
Move thread regulator **5** (screw **6**) towards ("**+**") (= more thread) or ("**-**") (= less thread)

4.05.12 Sewing foot pressure

Requirement
The material should be fed properly even at maximum speed and with the smallest stroke.

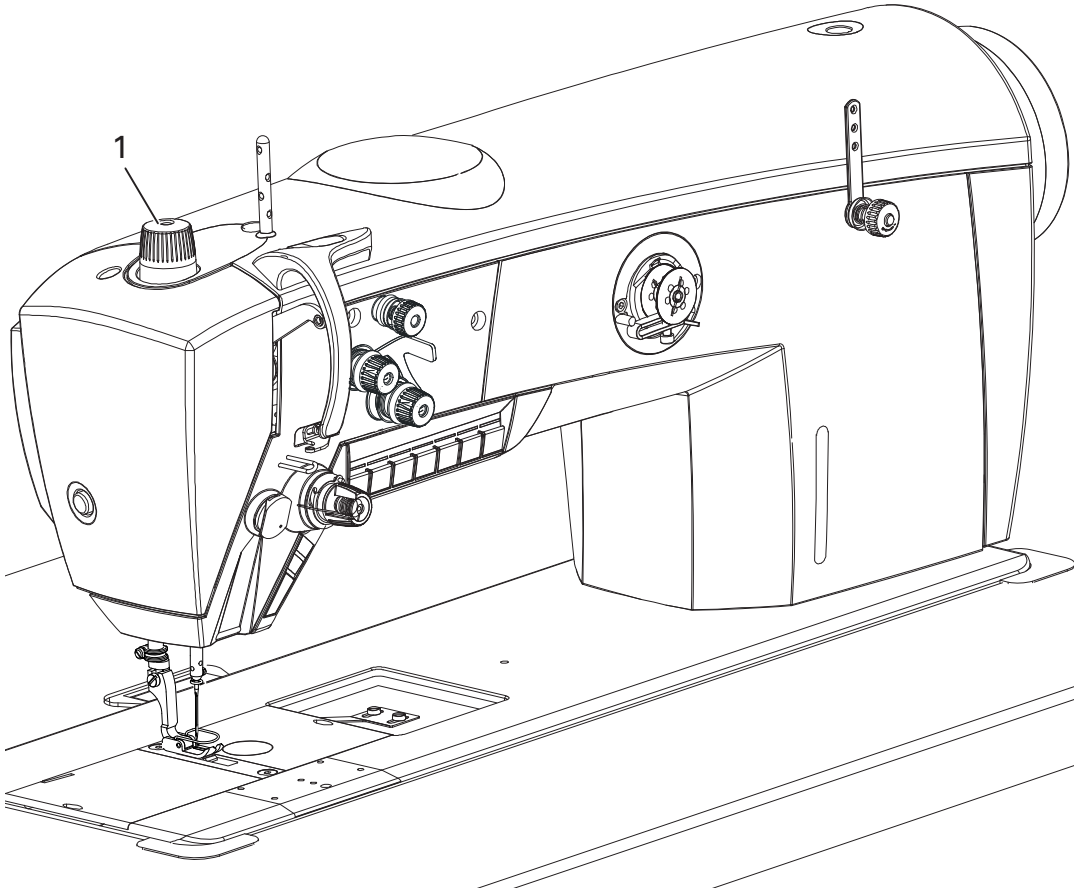

Fig. 4 - 12

- Turn adjustment wheel **1** in accordance with the requirement.

4.05.13 Lubrication

Requirement
After 10 seconds operation at **800** rpm, a light oil strip should appear on a paper strip held to the clamp foot.

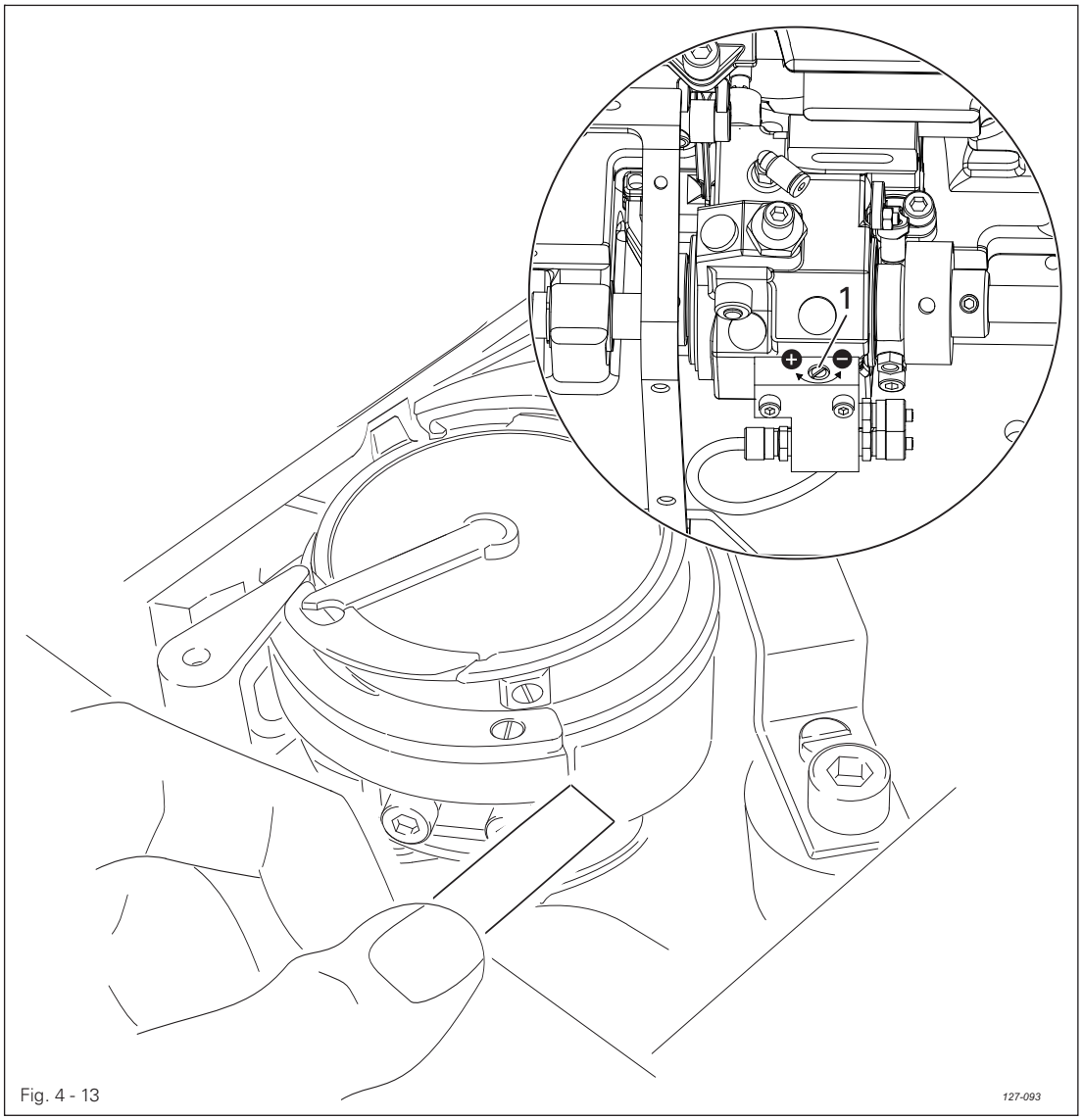

Fig. 4 - 13 127-093

- Check that the machine is filled with oil and that the oil lines are free of air.
- Run the machine for **2** – **3** min.

Do not put your hands into the needle area when the machine is running!
Danger of injury from moving parts!

- With the machine running, hold the paper strip against the hook and check the requirement.
- If necessary, regulate amount of oil with screw **1**

4.05.14 Reengaging the slip clutch

Clutch **1** is pre-set by the manufacturer. If the thread jams, clutch **1** disengages in order to avoid damage to the hooks.
Below is a description of how to engage clutch **1**.

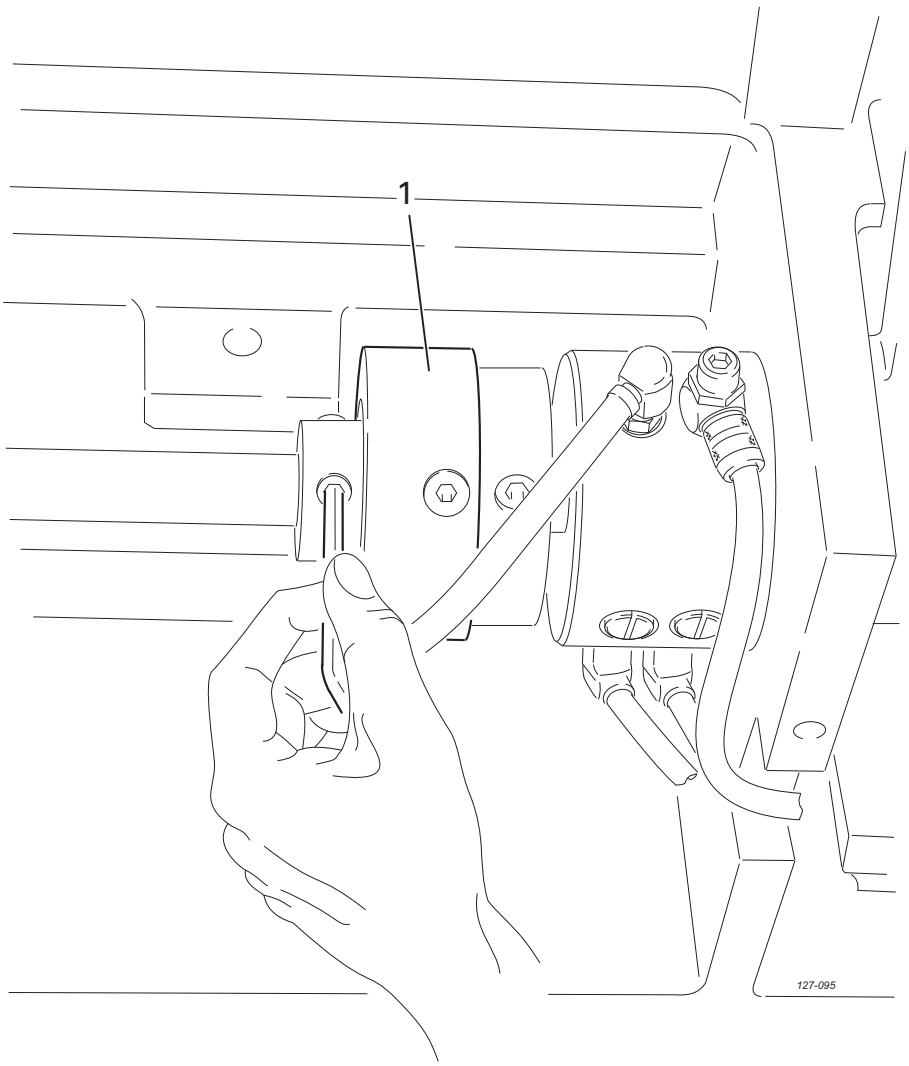

Fig. 4 - 14

- Eliminate the jammed thread.
- Brace clutch **1** as shown in Fig. **4 -14**, and turn the balance wheel until you feel clutch **1** engage again.

4.06 Adjusting the thread trimmer -900/81

4.06.01 Resting position of the roller lever / radial position of the control cam

Requirement

1. When the take-up lever is at t.d.c. (balance wheel position **60** °), control cam **1** should just have moved roller lever **5** into its basic position.
2. When the thread trimmer is in its resting position, there should be a clearance of **0.1** mm between roller lever **5** and control cam **1**.

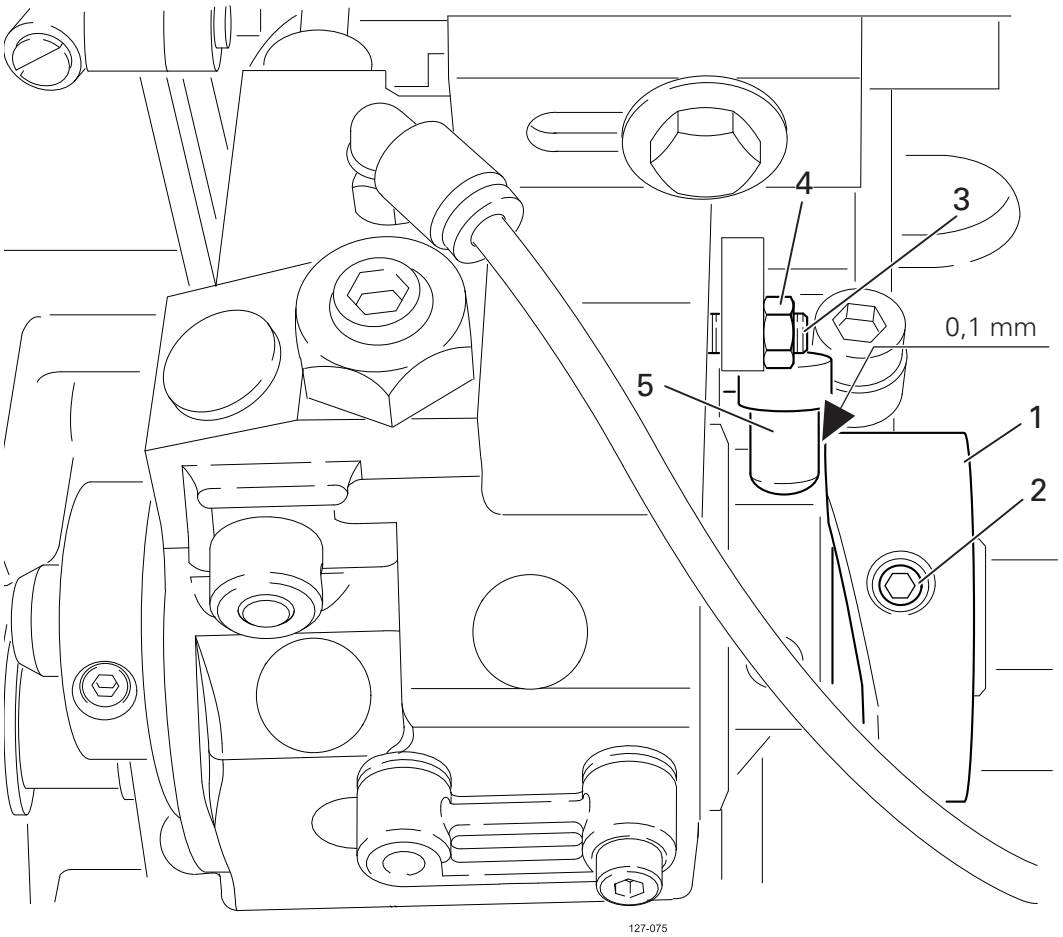

Fig. 4 - 15

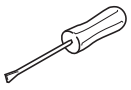

- Adjust control cam **1** (screws **2**) in accordance with requirement **1**.
- Adjust screw **3** (nut **4**) in accordance with requirement **2**

4.06.02 Position and height of the thread catcher

Requirement
When the needle bar is positioned at b.d.c. (balance wheel position **180**°) the edges of thread catcher **3** and knife **5** should be flush (see arrow).

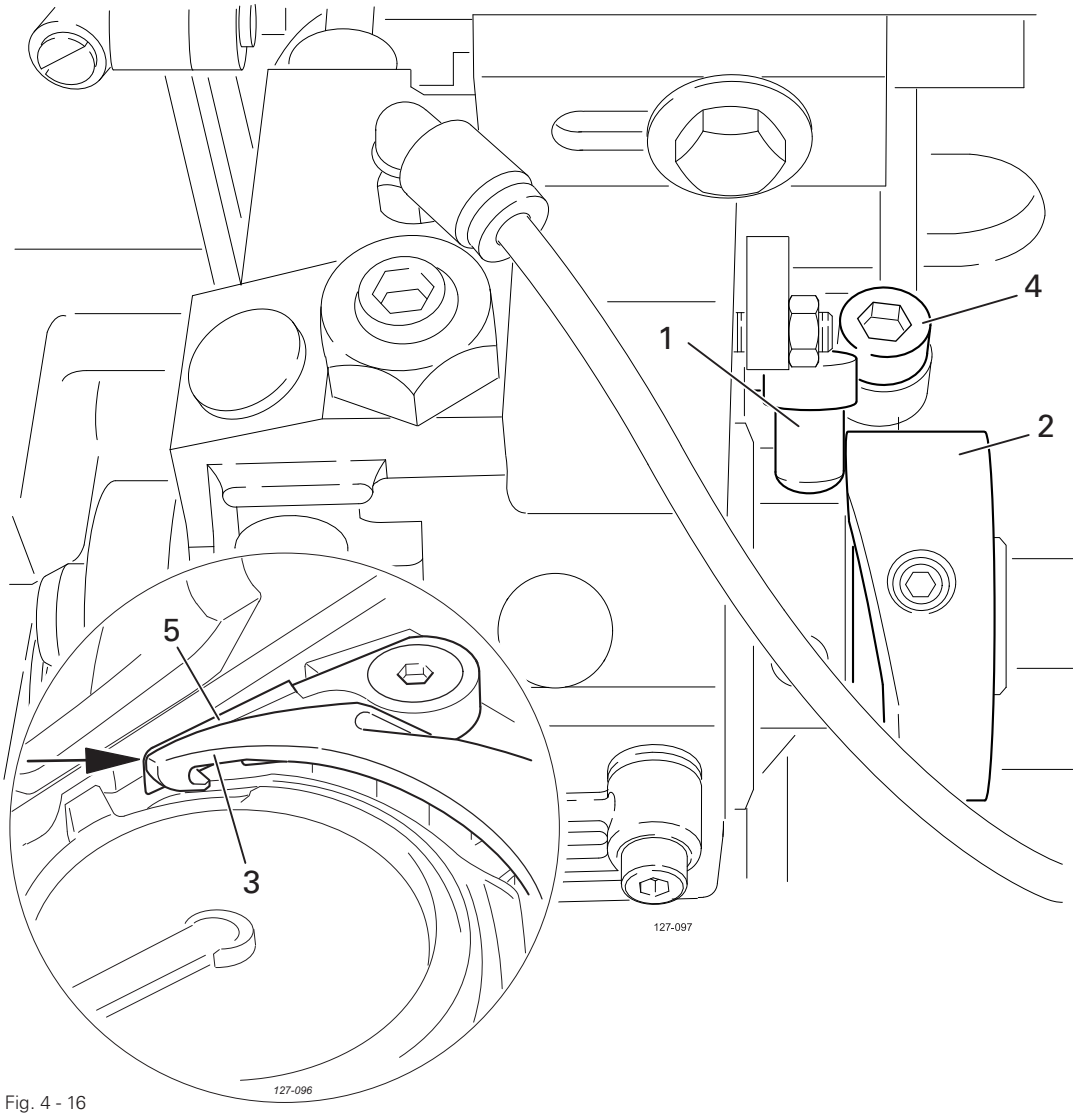

Fig. 4 - 16

- Press roller lever **1** against control cam **2**.
- Adjust thread catcher **3** (screw **4**) in accordance with the requirement

The height of thread catcher **3** is pre-set by the manufacturer and, if necessary, it can be adjusted with washers under thread catcher **3** on the base of the hook bearing.

4.06.03 Knife pressure

Requirement
When the front edge of thread catcher **3** is **5** – **6** mm in front of the knife blade, the knife **4** should be touching the catcher edge with slight pressure.

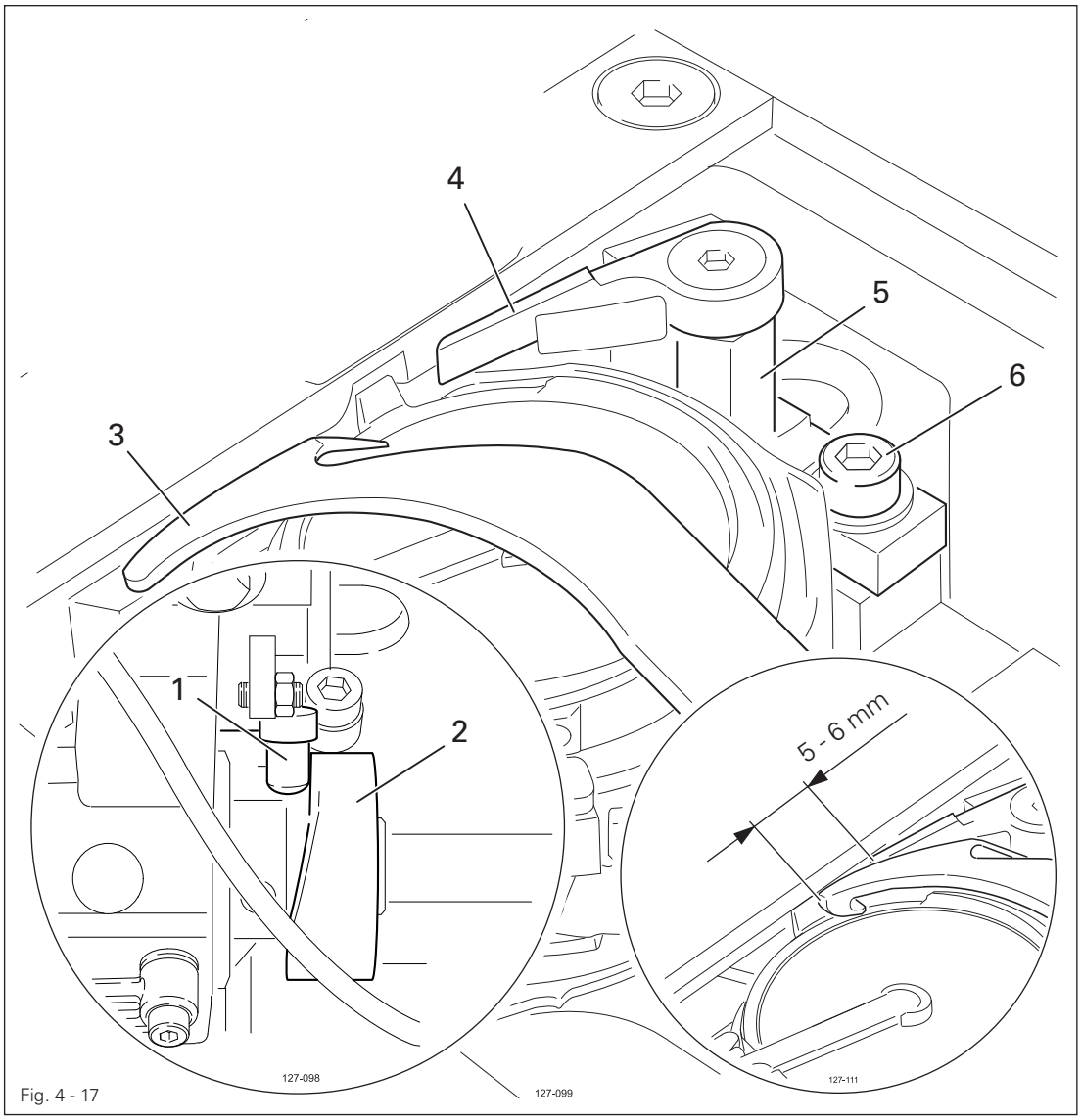

Fig. 4 - 17

- Bring the take-up lever to its b.d.c and press roller lever **1** into the control cam **2**.
- Turn the balance wheel until the front edge of catcher **3** is at a distance of **5** – **6** mm from the blade of knife **4**.
- Swing knife bearing **5** (screw **6**) in accordance with the requirement.

After completing the adjustment, recheck the position of the thread catcher in accordance with Chapter **4.06.02** Position and height of the thread catcher.

4.06.04 Bobbin thread clamp spring

Requirement
When the thread trimmer is in its cutting position, the clamp spring should slightly touch the thread catcher and hold the thread reliably.

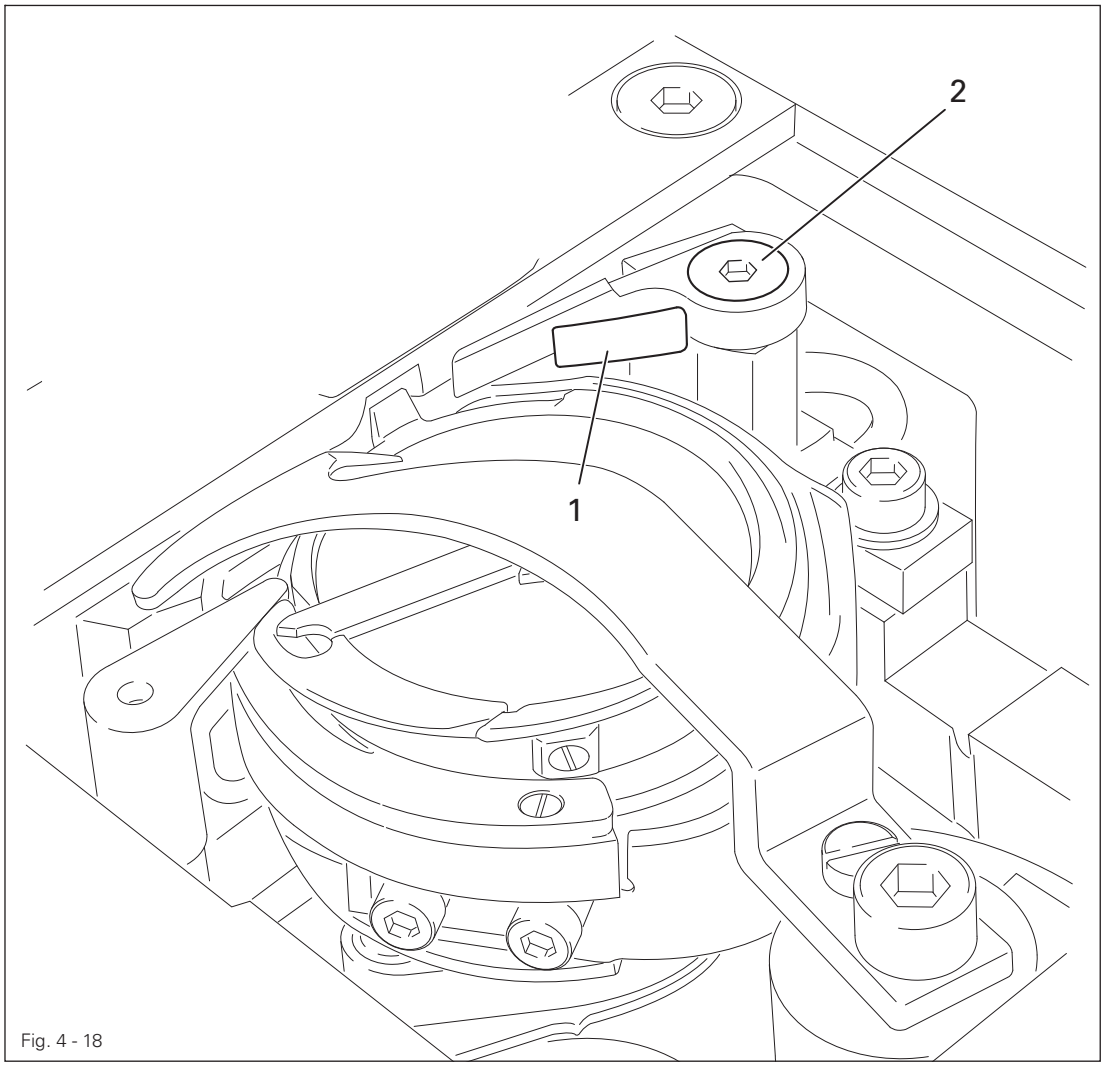

Fig. 4 - 18

- Adjust clamp spring **1** (screw **2**) in accordance with the requirement.
- Carry out the cutting operation by hand and check the setting. Readjust if necessary.

4.06.05 Manual cutting test

Requirement

1. When moving forward, thread catcher **1** must not move bobbin thread **3**
2. When thread catcher **1** is at its front point of reversal, bobbin thread **3** should be in the centre of the marked area (see arrow).
3. After the cutting operation has been completed, needle and bobbin thread should be cut neatly and bobbin thread **3** should be held.

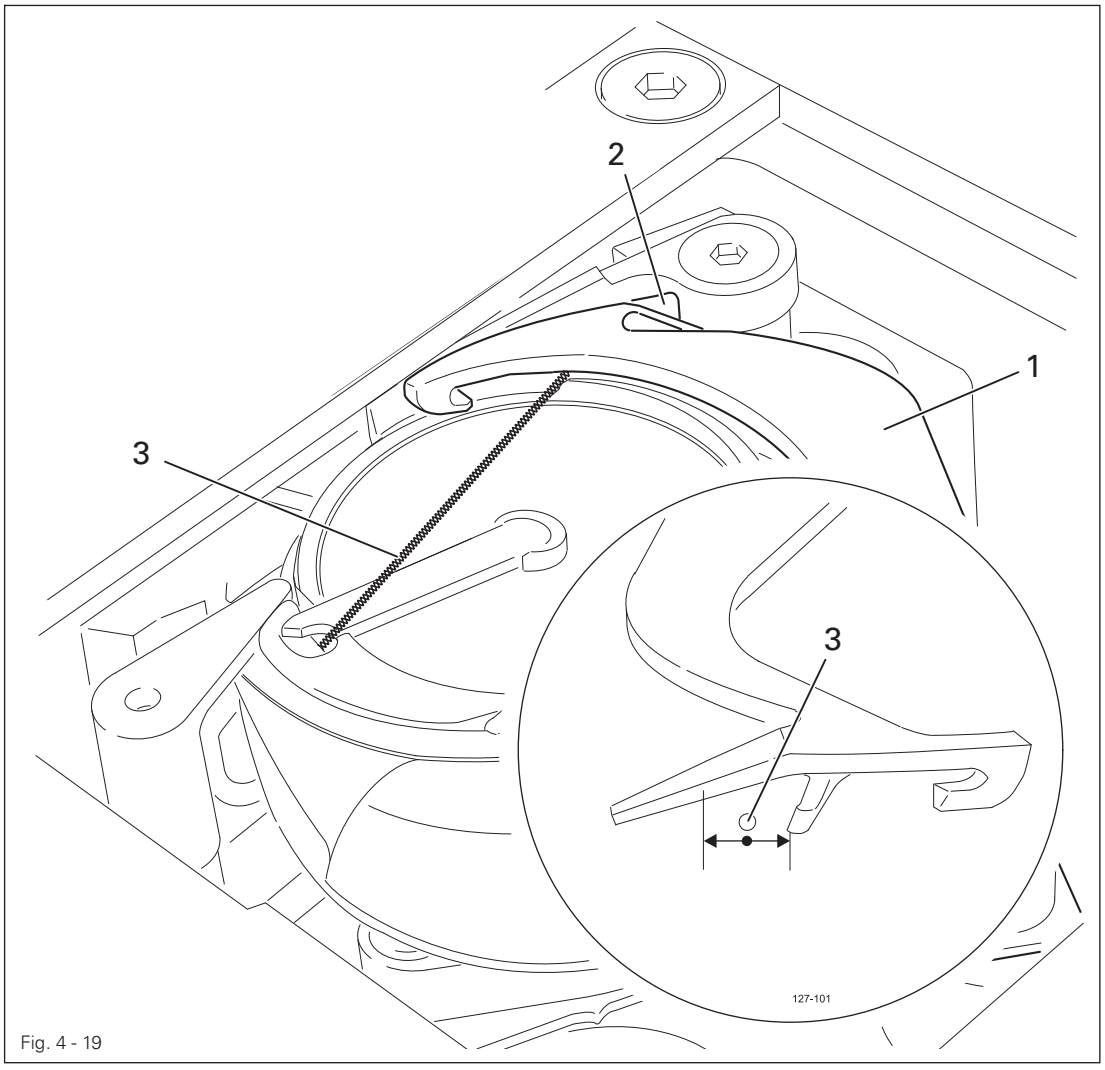

Fig. 4 - 19

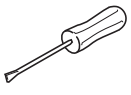

- Sew a few stitches.
- Switch of the main switch and the compressed air.
- Carry out a manual cutting test.
- Check requirement **1**. If necessary, readjust thread catcher **1** in accordance with Chapter **4.06.02** Position and height of the thread catcher.
- Check requirement **3**. If necessary, readjust bobbin thread clamp spring **2** in accordance with Chapter **4.06.04** Bobbin thread clamp spring.

4.07 Setup

4.07.01 Set reference position

- Log on as administrator or setter.



- Select function "Tools".



- Select function "Service".



- Select function "Drives".

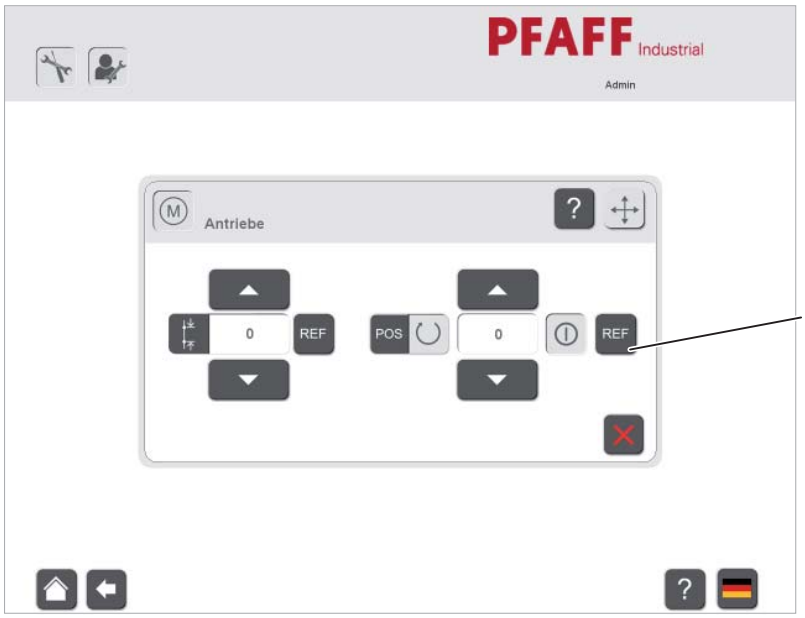



- Select function "Reference" on button **2**.

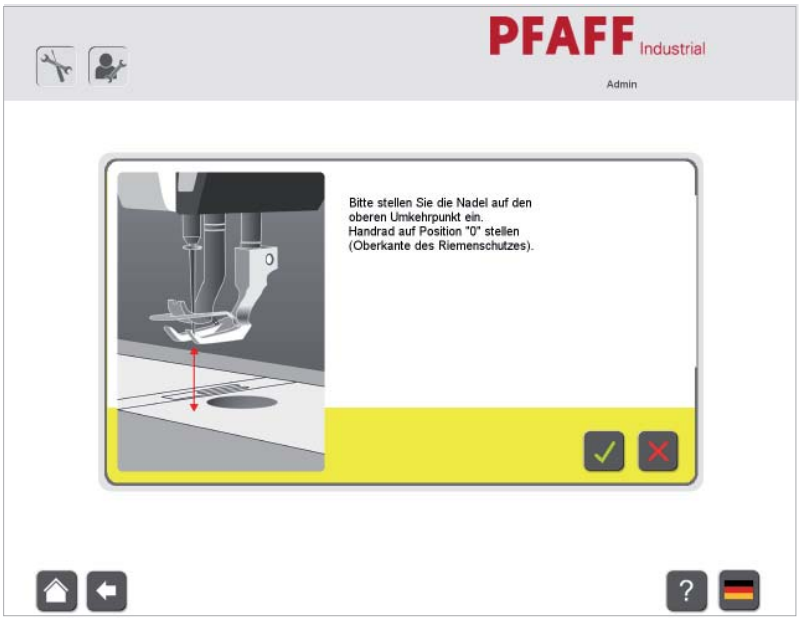

- Follow on-screen instruction on touch screen display.



- Finish input.

4.07.02 Stitch length adjustment

Enter stitch length "**0**" in programme "Manual", and check that no transport feed occurs. Adjust switching plate **1** (screws **2**) to stepper motor if required.

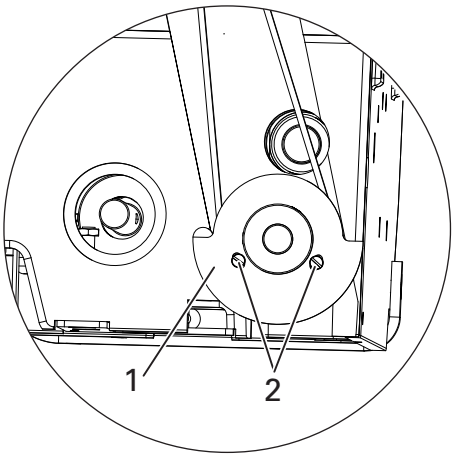



- Select function "Tools".



- Select function "Service".



- Select function "Stitch Platen Configuration"

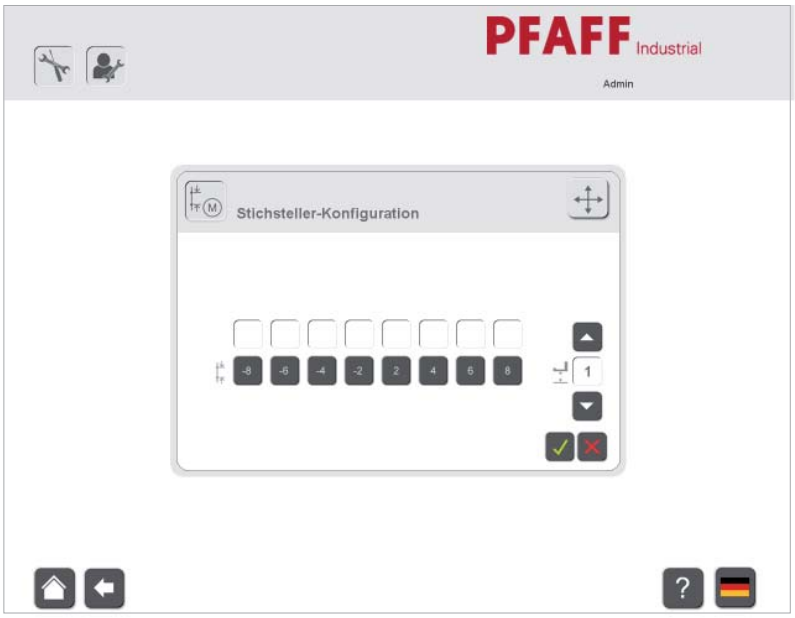

- Select lift via buttons, e.g. "**1**".
- Press stitch length button, e.g. "**4**".
- Carry out a trial stitching and measure stitch length.
- If stitch length is too short or too long, enter the measured value above the selected stitch length and carry out another trial stitching.
- Repeat until stitch length is correct.
- Carry out setting procedure at each lift height and stitch length.



If bolt 6 should touch the casting in longer stitch lengths, and error 38 is displayed, then lever 7 (see **chapter 4.05.03 Top, Bottom and Needle Feed Zero Position**) must be adjusted.

4.07.03 Commissioning the scanner



- Select function "Tools".



- Select function "Service".



- Select function "Scanner Commissioning".



- Switch the scanner on.
- Position the barcode.
- Set the scanner at the head of the machine in height and directionality, until the barcode is read continuously.



- Finish input.

4.07.04 Commissioning the camera



- Select function "Tools".



- Select function "Service".



- Select function "Camera Commissioning".

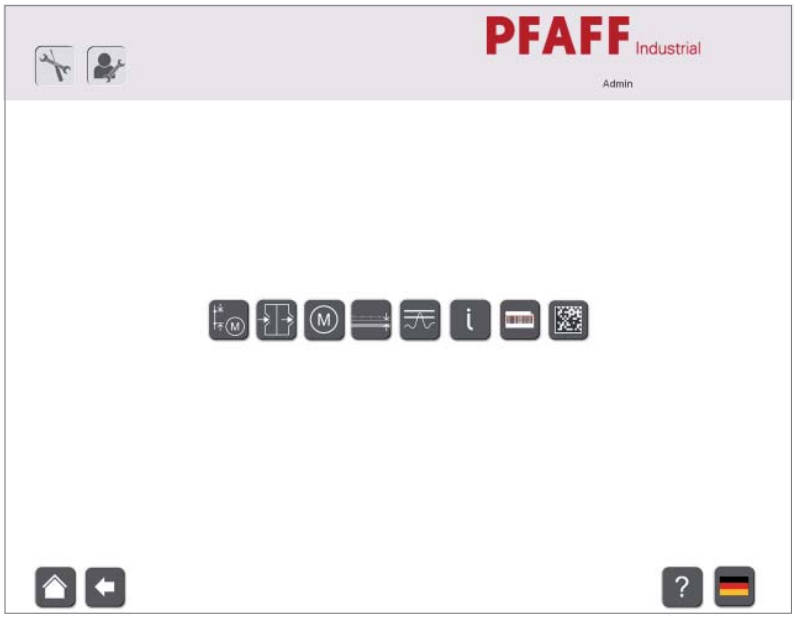

Explanation for symbols used in menu "Camera commissioning

Switch on camera



Pause



Stop



Video properties



Set resolution



Read DMC

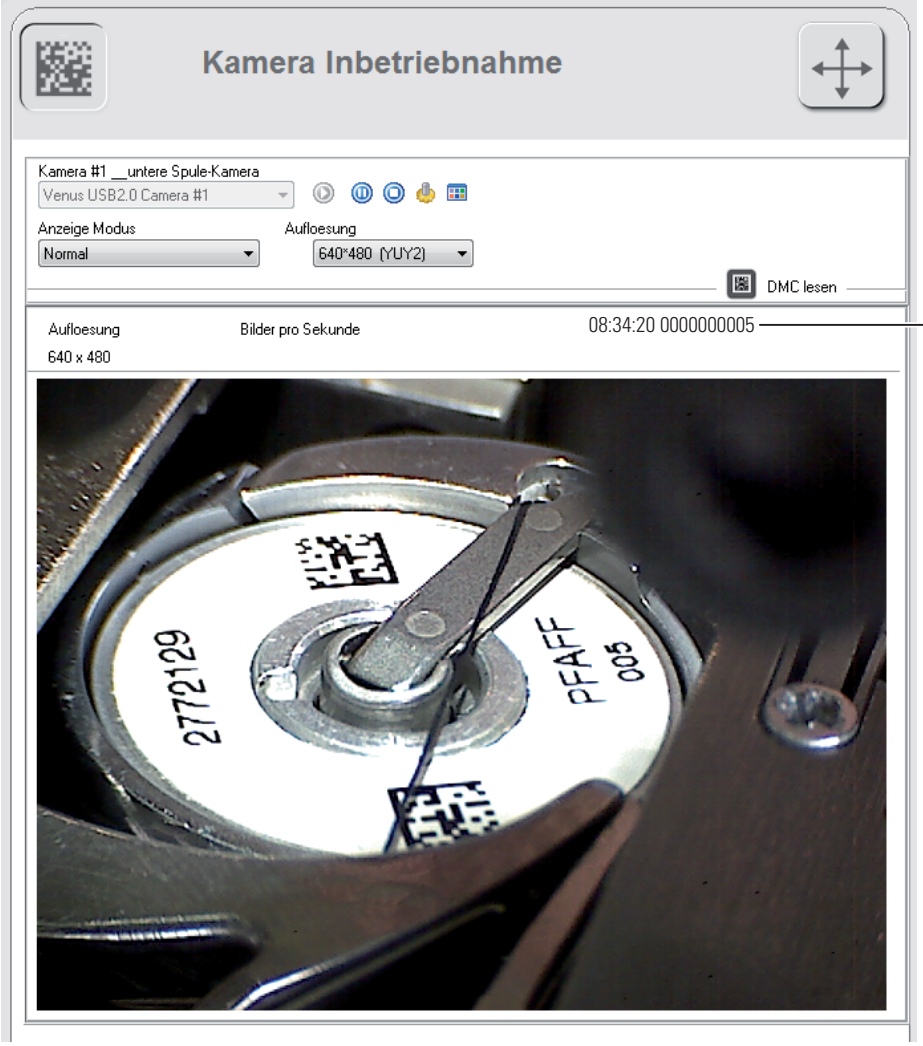

- Switch on camera on
- Select function "Read DMC"

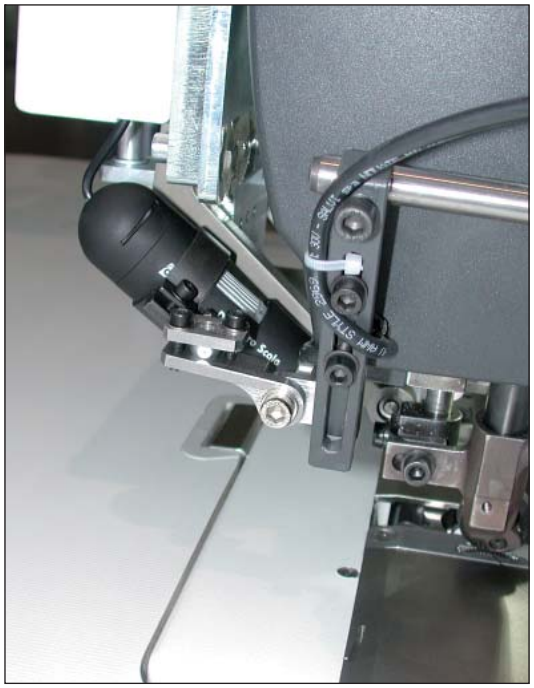

- Select **640** x **480** in the window "Resolution".
- The DATA Matrix code must appear in the window "Code".
- Proceed as follows if "- - - - -" is displayed in the window "Code":
  Switch off camera light on control **1**,
  adjust image focus on Focus **2**,
  turn bobbin to allow reading the DATA Matrix.
- Set exposure (see next page)

- Call up video properties.Adjust settings as needed.
- The following image shows the factory settings.

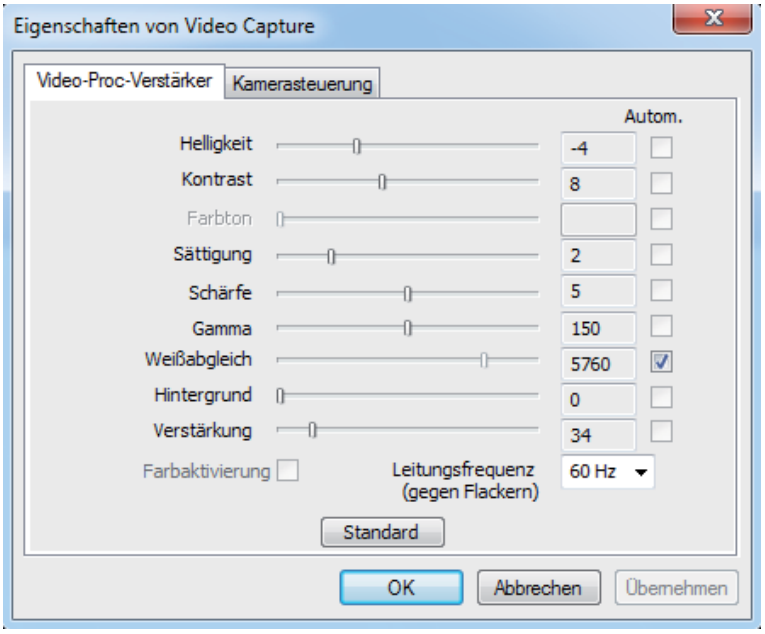

- Call up the camera control.Adjust settings as needed.
- The following image shows the factory settings.

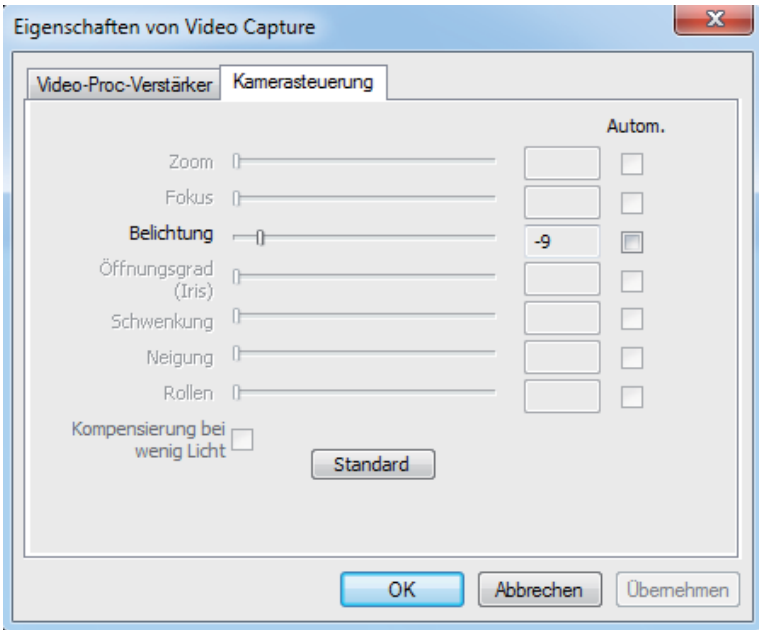

- Apply the settings.
- Finish input.

4.07.05 Adjustment of edge guide photocell

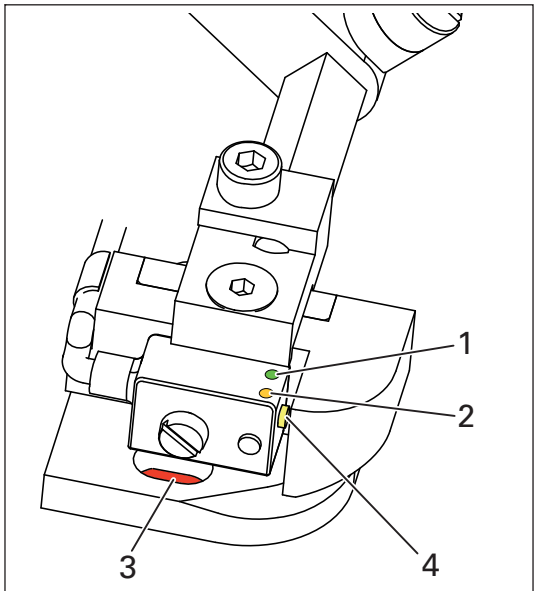

Fig. 4 - 20

LED control

- The LED **1** and **2** should be “on” without Material under the reflector area **3**.
- The LED **1** and **2** should be “off” with Material under the reflector area **3**.

Start auto-teach function

- With no material under the refector **3**, press the button **4** for about **3** sec. until the LED **2** starts flashing slowly.
- Confirm by pressing button 4.
- Cover the reflector **3** with white material or paper.
- Finish the auto-teach function by pressing button **4** again.

Control:

In the menu Tools,Service,In/Outputs (cap.**4.10**) check Input **16**

Display without material

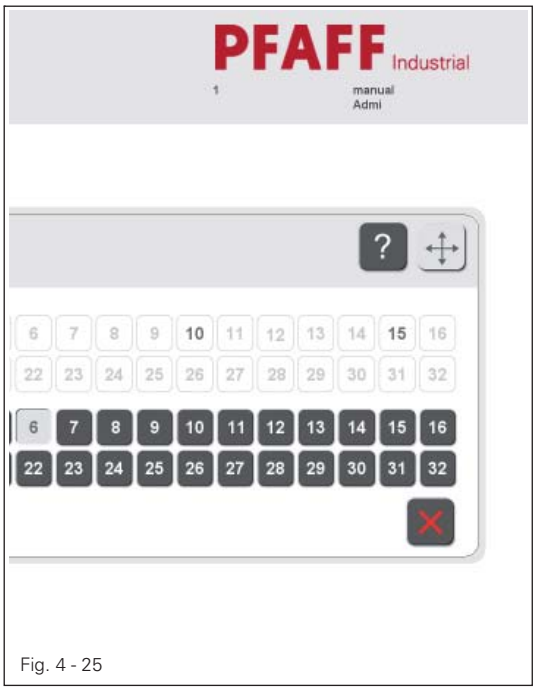

Fig. 4 - 25

Display with material

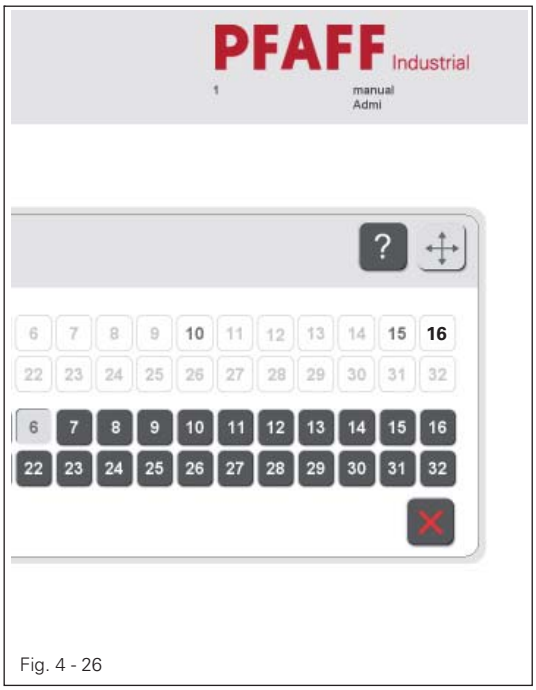

Fig. 4 - 26

4.08 Parameter settings

4.08.01 Selecting and altering the parameters

The parameter values can only be altered by the supervisor or the administrator.

- Log in as administrator or supervisor.



- Select the "tools" function.



- Call up the menu for altering parameter values

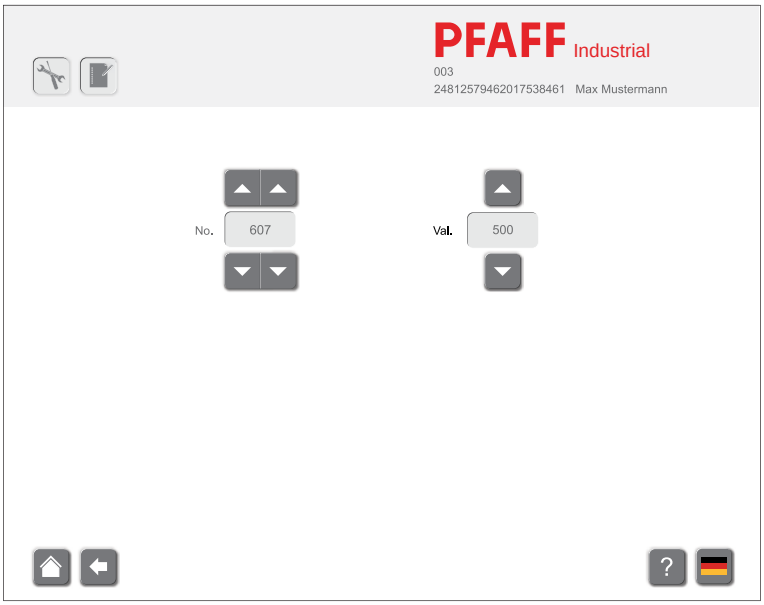

- By tapping the appropriate arrow symbols select the desired parameter ("No.").
- By tapping the appropriate arrow symbols alter the value ("Val.") of the selected parameter.

4.08.02 Parameter list

Group	Parameter	Description	User level	Setting range	Set value
1	106	Speed for seam start ON = variable (pedal-related) OFF = constant	B, C	ON - OFF	OFF
	107	Speed for seam start ON = limited by program OFF = limited by parameter **607**	B, C	ON - OFF	OFF
	112	No. of stitches req. for light barrier blank-out	A, B, C	0 - 255	0
	116	Soft start stitches (soft start)	A, B, C	0 - 255	0
	117	Soft start stitches (soft start)	B, C	60 - 2000	400
	118	Output is ON = needle cooling OFF = running motor	B, C	ON - OFF	ON
	199	Speed for light barrier compensation stitches	B, C	300 - 6400	1200
2	201	Transmitting capacity of laser diode of bobbin thread monitor 0 = off, 255 = max. luminosity	B, C	0 - 255	100
	206	Program interruption/break-off of seam section at fixed speed ON = with pedal -2 OFF = with pedal **0**	B, C	ON - OFF	OFF
3	307	Delay time till stop of needle cooling after machine stop	B, C	0 - 2000	50
	311	Stitch-counting stop ON = with thread trimming OFF = without thread trimming	B, C	ON - OFF	ON
	323	No. of forward stitches for programmable start tack	B, C	1 - 9	2
	324	No. of reverse stitches for programmable start tack	B, C	1 - 9	1
	325	Speed of programmable start tack	B,C	200 - 1500	700
	326	No. of repeats of programmable start tack	B, C	1 - 10	3
	329	No. of forward stitches for programmable end tack	B, C	1 - 9	2
	330	No. of reverse stitches for programmable end tack	B, C	1 - 9	1

Group	Parameter	Description	User level	Setting range	Set value
3	331	Speed of programmable end tack	B,C	100 - 1500	700
	332	No. of repeats of programmable end tack	B,C	1 - 10	3
	368	Start tack / ornamental start tack ON = quadruple, OFF = double	B, C	ON - OFF	OFF
4	401 	Input "stroke adjustment" (3745) ON = switch operation OFF = key operation	B, C	ON - OFF	ON
	403	Delay till speed release (3745) to end of stroke adjustment [ms]	B, C	0 - 2500	150
	404	Stitch number with stroke adjustment (3745)	B, C	0 - 250	1
5	587	Speed limit at stroke 2 (3745)	B,C	300 - 5000	2900
	588	Speed limit at stroke 3 (3745)	B,C	300 - 5000	2000
	589	Speed limit at stroke 4 (3745)	B,C	300 - 5000	1100
6	606	Minimum speed	B,C	30 - 650	180
	607	Maximum speed	B,C	300 - 3200	2500
	608	Speed phase curve (pedal characteristic) ON = linear OFF – non-linear	B,C	ON - OFF	OFF
	609	Cutting speed	B,C	60 - 300	180
	615	End recognition with light barrier ON = from bright to dark OFF = from dark to bright	B,C	ON - OFF	OFF
	618	Return after end of seam ON = yes OFF = no	B,C	ON - OFF	ON
	623	Switch-on delay for return [ms]	B,C	0 - 2000	50
	634 	Function of external key for feed changeover ON = feed changeover at standstill and with machine running OFF = feed changeover with machine running only	B,C	ON - OFF	ON

Group	Parameter	Description	User level	Setting range	Set value
6	636	Thread tension release in connection with presser foot ON = yes OFF = no	B,C	ON - OFF	OFF
	644	No. of knotting stitches	B,C	1 - 20	0
	653	Bearing position before sewing ON = yes OFF = no	B,C	ON - OFF	OFF
	660	Bobbin thread monitoring ON = off OFF = with sensor	A,B,C	0 - 1	1
	665	Running lock/stop when ON = contact closed OFF = contact open	B,C	ON - OFF	ON
	668	Thread wiper ON = yes OFF = no	B,C	ON - OFF	OFF
	688	Thread tension release in connection with the presser foot during intermediate stop, if parameter 636 is at = 1 ON = yes, OFF = no	B,C	ON - OFF	ON
	695 	Function of "needle position change" key 1 = Needle raised without trimming 2 = Needle position change 3 = Single stitch 4 = Single reverse stitch 5 = Move forward to a needle position step by step 6 = programmable tack on / off 7 = proceed to next sewing range	B,C	1 - 7	**7**
7	700	Needle position 0 (needle in t.d.c.)	B,C	0 - 359	110
	702	Needle position 1 (needle lowered)	B,C	0 - 359	140
	703	Needle position 2 (take-up lever raised)	B,C	0 - 359	66
	705	Needle position 5 (end of cutting signal)	B,C	0 - 359	330

Group	Parameter	Description	User level	Setting range	Set value
7	706	Needle position 6 (start cutting signal)	B,C	0 - 359	214
	707	Start thread tension release	B,C	0 - 359	214
	710	Needle position 3 (needle raised)	B,C	0 - 359	0
	715	Switch-on time (ms) for thread wiper	B,C	0 - 2550	40
	716	Switch on delay time for thread wiper [ms]	B,C	0 - 2000	120
	718	Standstill brake tact (**0** = brake off)	B,C	0 - 40	20
	722	Acceleration ramp for sewing motor 1 = flat 50 = steep	B,C	1 - 50	40
	723	Brake ramp for sewing motor 1 = flat 50 = steep	B,C	6 -60	45
	727	Bobbin monitoring effected ON = sewing motor stop and signal lamp on OFF = signal lamp on	B,C	ON - OFF	ON
	729	Start delay after presser foot lowered	B,C	10 - 2550	140
	730	Lift delay for presser foot after seam end	B,C	0 - 2000	100
	750	Increased standstill brake in case of docu-seam error	B,C	0 - 100	70
	760	Remaining no. of stitches after response of bobbin thread monitor during monitoring (fixed value x 10)	A,B,C	1 - 250	20
	770	Lift delay for presser foot at pedal position "-1"	B,C	10 - 2000	100
	778	Blowing time for cleaning thread monitor	B,C	10 - 5000	100
	780 	Function of "tack suppression" key 1 = Bartack inversion (once) 2 = Bartack suppression (all bartacks switched off) 3 = Reverse move to needle position step by step 4 = Edge trimmer on /off 5 = programmable tack on / off	B,C	1 - 5	1

Group	Parameter	Description	User level	Setting range	Set value
7	789	Needle position **10** (bearing position)	B,C	0 - 359	71
	793	Delay till start knotting stitches	B,C	0 - 2000	140
	799	Selected machine class	C	1 - 1	1
8	800	Motor rotation direction with view of V-belt pulley 1 = anti-clockwise 0 = clockwise	C	0 - 1	1
	801	Reverse angle after seam end	B,C	10 - 200	31
	802	Gear reduction main drive 1 = variable 0 = 1:1	C	0 - 1	1
	814	Switch-over positioning process 1 = Ramp brake in target position 2 = Max. brake on positioning speed and wait till target position is reached.	C	1 - 2	2
	815	Rotor position definition after mains ON 1 = with rotary field 2 = with current impulse	C	1 - 2	1
	880	Starting current max. [A]	C	1 - 20	10
	881	Proportional amplification of speed control of sewing motor	C	10 - 1000	250
	884	Integral amplification of speed control of sewing motor	B,C	3 - 24	18
	885	Proportional amplification of position controller for sewing motor	C	10 - 80	40
	886	Differential amplification of position controller (sewing motor)	C	1 - 30	24
	887	Time for position control (0 = always)	C	1 - 20	10
	889	Proportional amplification of superordinate position controller for stop brake	C	0 - 2500	200

Group	Parameter	Description	User level	Setting range	Set value
8	890	Variant MINI-motor 1 = long, 0 = short	C	1 - 10	5
	897	Variant MINI-Motor 1 = long, 0 = short	C	0 - 1	1
	898	Motor current limitation 1 = 15A, 0 = 10A	C	ON - OFF	ON
9	900	Additional P-amplification of speed controller (sewing motor)	B,C	1 - 30	18
	901	Cutting release-speed	B,C	30 - 500	300
	933	Switchover of screen display >1 = diagnosis 0 = normal display	C	0 - 3	0
	969	Switch off angle for presser foot during thread pulling at beginning of seam	B,C	0 - 359	255
	985	Angle for thread clamp switch on	B,C	0 - 359	224
	986	Angle for thread clamp switch off	B,C	0 - 359	54
	989	Thread clamp at beginning of seam 0 = thread clamp off 1 = thread clamp without presser foot lift 2 = thread clamp with presser foot lift	B,C	0 - 2	1
	996	Timer thread clamp (max. switch-on time of electrical thread clamp after end of thread [100 ms]	B,C	0 - 600	100
10	1001	Switchover position stepping motor feed regulator	B,C	0 - 359	100
11	1101	Rotating direction stepping motor (feed regulator) 1 = anti-clockwise 0 = clockwise	B,C	0 - 1	1
	1102	Stepping mode stepping motor (feed regulator) 1 = full step 2 = half step 3 = quarter step 4 = eighth step	B,C	0 - 4	4

Group	Parameter	Description	User level	Setting range	Set value
11	1103	Max. current in % stepping motor (feed regulator)	B,C	1 - 100	80
	1104	Reducing current in % stepping motor (feed regulator)	B,C	0 - 100	60
	1105	Start stop time (time for one step at start stop speed) stepping motor (feed regulator)	B,C	5 - 1000	54
	1106	Roof time (time for one step at roof speed) stepping motor (feed regulator)	B,C	1 - 1000	20
	1107	Acceleration stepping motor feed regulator (percentage increase of start stop to roof speed)	B,C	1 - 100	10
	1108	Number of brake steps stepping motor (feed regulator)	B,C	1 - 200	12
	1110	Zero position step motor of the stitch adjuster	B,C	-100 - 100	0
12	1201	Rotation direction stepping motor thread tension 1 = anti-clockwise, 3 = clockwise	B,C	0 - 1	0
	1202	Rotation direction thread tension 1 = full step, 2 = half step 3 = quarter step, 4 = eighth step	B,C	0 - 4	2
	1203	Max. current in % stepping motor (thread tension)	B,C	1 - 100	100
	1204	Reducing current in % stepping motor (thread tension)	B,C	0 - 100	30
	1205	Start stop time stepping motor thread tension (time for one step at start stop speed)	B,C	-4000	300
	1206	Roof time stepping motor thread tension (time for one step at roof speed)	B,C	-2000	100
	1207	Acceleration stepping motor thread tension (percentage increase of start stop to roof speed)	B,C	-100	10
	1208	Brake steps stepping motor thread tension (number of brake steps)	B,C	-200	14
	1210	Correction value of reference position stepping motor thread tension	B,C	10 - 100	20
	1213	Zero position step motor thread tension	B,C	10 - 200	81
20	2010	Position compensation point for thread strength sensor, in degrees 0 – 359	B,C	0 - 359	200
	2011	Position measurement 1 (largest hook loop) in degrees 0 – 359	B,C	0 - 359	337

Group	Parameter	Description	User level	Setting range	Set value
20	2012	Measurement window measurement **1** in +/-degrees	B,C	0 - 100	20
	2013	Position measurement **2,** t.d.c. take-up lever, in degrees 0 – 359	B,C	0 - 359	66
	2014	Measurement window measurement **2** in +/-degrees)	B,C	0 - 100	25
	2015	Fade-out stitches for missed stitch recognition	A,B,C	2 - 50	10
	2016	Fade-out stitches edge guide	A,B,C	1 - 10	5
	2017	Conversion factor for regulating distance of stepping motor of thread tension (normal thread tension)	A,B,C	0 - 4000	2600
	2018	Docu-seam ON = Permanent release of edge guide adjustment OFF = Edge guide adjustment only with appropriate authorization		ON - OFF	OFF
	2019	Docu-seam ON = Block sewing functions of keypad in documented seam sector OFF = Functions always permitted	B,C	ON - OFF	ON
	2020	Docu-seam, P-share of thread tension control	A,B,C	0 - 10	1
	2021	Thread tension while cutting (cN)	A,B,C	0 - 500	50
	2022	Stitch length of tie stitches	A,B,C	10 - 30	15
	2023	Selection mode for soft limit for docu-seam 1 = Docu-seam fields, once tolerance stitches sequentially surpass limit. 2 = Docu-seam fields, once number of tolerance stitches has surpassed soft limit.	A,B,C	1 - 2	2
	2024	Stitch length for backtack 0 = Stitch length as per programme	A,B,C	0 - 60	0
	2025	Stitch length for end backtack 0 = Stitch length as per programme	A,B,C	0 - 60	0
	2026	Thread tension values 1 = no median values generated >1 = no. of stitches req. for median value generation	A,B,C	1 - 5	1

4.09 Description of the error messages

Display	Description	Remedy
Error: 1	Treadle not at rest	Check treadle
Error: 3	Stitch setter reference position not	Check step motor and initiator
Error: 30	Circuit board sensor defective	Replace control
Error: 38	Stitch setter setpoint/current position different	Stitch setter has moved to mech. stop or step motor must be replaced
Error: 43	Circuit board step motor defective	Replace control
Error: 62	Voltage at 24V net adapter too	Check connected consumer
Error: 63	Overload of 24V net adapter	Check connected consumer
Error: 64	"Supply OFF" signal at power on	Replace control
Error: 65	Error at power electronics at power up	Replace control
Error: 66	Power electronics diagnostic returned error	Replace control
Error: 68	Overload on main drive	Replace control
Error: 70	Motor blocked	Check machine for sluggishness or replace motor
Error: 71	Incremental encoder of main drive not plugged in	Check plug connection
Error: 74	No synchronisation impulse for top part	Check transmitter
Error: 172	PC communication error	Check control connection to PC
Error: 173	Run-up error main drive	Check plug connection

4.10 Inputs / Outputs

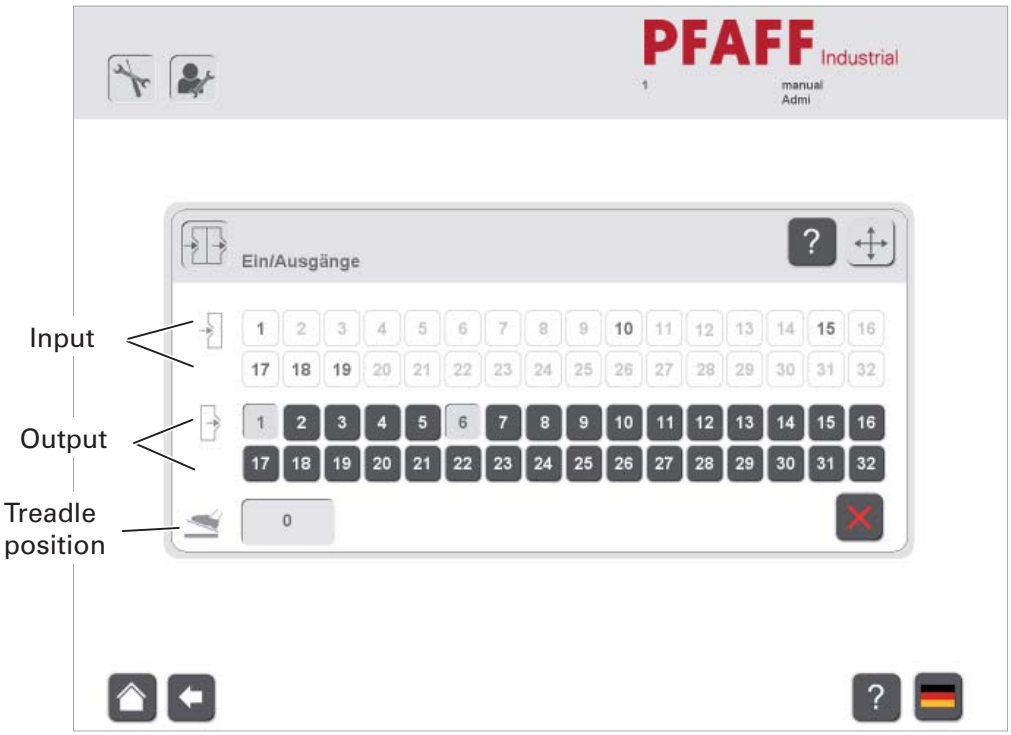

Inputs

Key	Input	Function
1	E1	Ref. SM stitch setter
2	E2	E-winder
3	E7	Knee switch* (stroke adjustment)
5	E9	
6	E4	Knee switch (man. seam section)
7	E6	Stop (safety device)
8	E8	Bobin cover in reading position
9	E11	Stop motion device
10	E3	Slide control
16	LS	Photocell straight edge
17	E51	Bobbin lower thread
18	E52	Bobbin top thread
19	E53	Error straight edge
25 - 31		Control panel on machine
32		Hotkey

Outputs

Key	Output	Function
1	A6	Stroke adjustment 0 *
2	A11	Stop motion device reset
5	A12	Stroke adjustment 1*
6	A13	Stroke adjustment 2*
7	A3	Thread clamp
9	A15	Foot cleaning
10	A1	Motor run
11	A14	Stroke adjustment 3*
13	A5	E-winder
14	A4	Clamp foot
15	A8	Thread tension to be released
16	A9	Cutting
17		LED docu-seam Straight edge
25 - 40		LED on control panel of machine

* 3745

4.11 Pin assignment

X1	
AMP 4polig	Motor connection
1	PE
2	U
3	W
4	V

X2	
SubD 9polar	Motor incremental encoder
1	FA
2	FB
3	SM
4	ADTC
5	5V
6	Y EXT SM
7	15V
8	EXT SM
9	GND

X3	
SubD 9polar	Speed control unit
5	5V
8	IN
9	GND

X4	
SubD 9polar	Control panel
1	24V
2	RXD in
3	TXD out
4	5V
5	GND
7	RTS out
8	CTS in
9	NC

X6	
Modular jack 9polar	Light barrier/ Stop motion device
1	NC
2	5V
3	GND
4	UFW-Sensor
5	LS
6	24V/15V
7	UFW-Laser
8	NC

X5 SubD 37polar Inputs/oututs				
PIN	Service	Port	Name	Function
1			ANA	Poti for stroke adjustment*
2			+5V	OTE (+5V)
3			ANA	Laser stop motion device
4				
5	In1	0_0	E1	Ref. SM stitch setter
6	In2	0_1	E2	E-winder: Bobbin full
7	In3	0_2	E7	Knee switch (stroke adjustment)*
8			I2C-SDA	OTE (SDA)
9	In5	0_4	E9	
10	In6	0_5	E4	Knee switch (man. seam section)
11	In7	0_6	E6	Stop (safety device)
12	In8	0_7	E8	
13	In9	1_0	E11	Stop motion device
14	In10	1_1	E3	Switch (slide - stitch platen)
15				
16				
17				
18				Inputs (+24V)
19			Gnd	OTE (Gnd)
20	Out1	10_0	A6	Stroke adjustment 0*
21	Out2	10_1	A11	Stop motion device reset
22			A19	Counting impulse/SyMa f. stop motion device
23			I2C-SCA	OTE (SCL)
24	Out5	10_4	A12	Stroke adjustment 1*
25	Out6	10_5	A13	Stroke adjustment 2*
26				
27	Out7	10_6	A3	Thread clamp (pneum.)
28	Out8	10_7	A7	
29	Out9	11_0	A15	Foot cleaning (pneum.)
30	Out10	11_1	A1	Motor run
31	Out11	11_2		Stroke adjustment 3*
32	Out12	11_3		
33				Outputs (+24V)
34	Out13	11_4	A5	Electric spooler
35	Out14	11_5	A4	Thread clamp (pneum.)
36	Out15	11_6	A8	Release thread tension (pneum.)
37	Out16	11_7	A9	Cut (pneum.)

* 3745

15pol. SubD-connector				
PIN	Service	Port	Name	Function
15			U24	+24V
				Inputs (high +24V)
1	In17	2_0	E51	Bobbin lower thread spooler
2	In18	2_1	E52	Bobbin upper thread spooler
3	In19	2_2	E53	Error straight edge
4	In20	2_3	E54	24V/15V
9	In21	2_4	E55	
10	In22	2_5	E56	
11	In23	2_6	E57	
				Outputs (OC 0,35A)
12	Out17	12_0	A51	LED docu-seam in straight edge
5	Out18	12_1	A52	
13	Out19	12_2	A53	
6	Out20	12_3	A54	
14	Out21	12_4	A55	
7	Out22	12_5	A56	
8	Out23	12_6	A57	

Control panel on machine

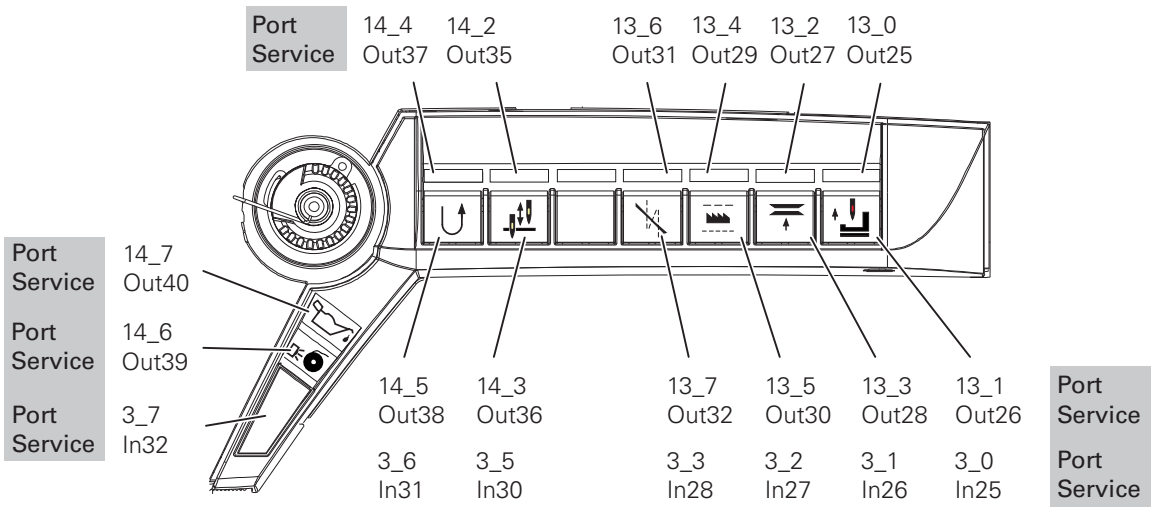

4.12 Importend Sevice-information

Attension!!

To avoid wrong monitoring, it is necessary to calibrate the system, after changing the thread-force-sensor 2 or the control box 1.

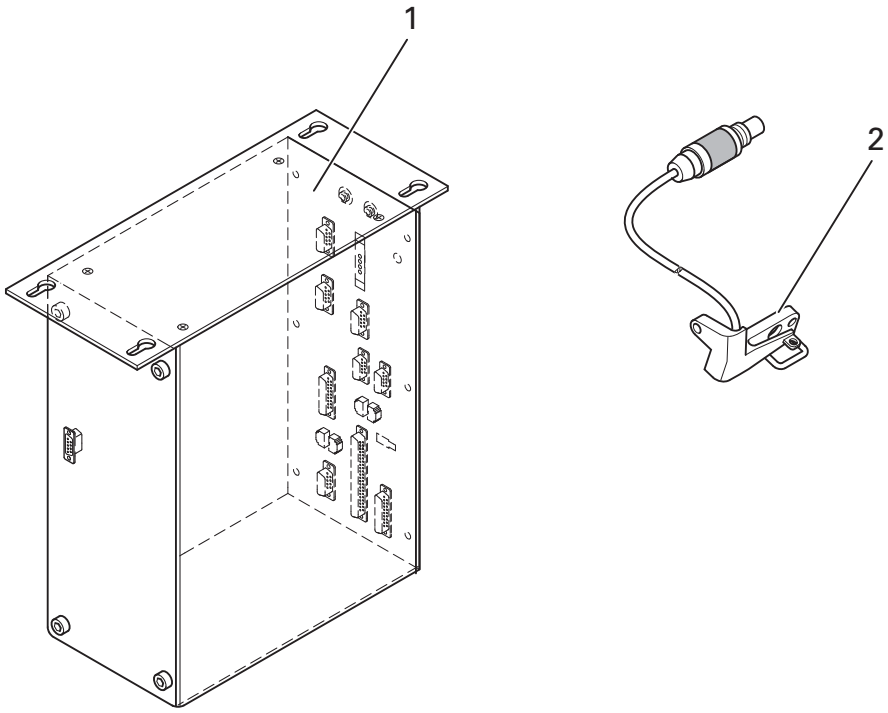

PFAFF® Industrial

POWERLine

3741
3745

CALIBRATION INSTRUCTIONS

Kalibrieranleitung engl. 06.12

5 Calibration

5.01 General information

Due to an increased quality awareness, a calibration service in the context of international competition constantly gains significance. The use of systems for quality assurance is therefore of equal interest both for the manufacturer and the user of testing equipment. This leads to high customer requirements, which result from the DIN standard ISO 9000 for the control of testing equipment.

The control of testing equipment should ensure that all testing equipment relevant for the quality meet up to the specifications. For this reason testing or measuring equipment must be calibrated, and the traceability to national standards must be possible. Physical effects such as ageing and drift make a calibration service necessary, in order to guarantee the significance of the test readings.

5.01.01 Calibration

Calibration is an operation during which measuring equipment with an unidentified error is checked. The check is carried out by comparison with standards, the accuracy of which is confirmed by an official test certificate. If , during the calibration, the readings are outside the permitted tolerance, an adjustment is made, so that the values are within the permitted tolerance, and the calibration is repeated.



Calibration can be carried out by anybody. In contrast to gauging, there is no legal background for calibration.

5.01.02 Traceability

Traceability means that when measuring equipment is tested, it must be possible to trace the documentation of the detailed readings back to a legal standard, i.e. the recorded data is compared with the national standard for the measured quantity.

5.01.03 Standards

Standards are comparative testing means, which refer to one of the seven basic units of the international standard system (SI-System). Standards must themselves be calibrated regularly.
Their traceability is guaranteed by calibration or gauging certificates issued by DKD offices (German Calibration Service) or by the Gauging Office.

The PFAFF calibration system uses a weight of 500 cN = 5 N (cN = centi Newton) as "standard", which results from the product of the weight of a body (SI-unit weight in kg = kilogram) and the gravitational acceleration (g = 9.80992 m/s2). In this way the physical measuring unit of the thread pull in cN is traceable to the standard for weight in kilogram (Calibration certificate no. …., Gauging Office Albstadt).

The weight used here of 0.509765 kg = 509,765 g +/- 7.5 mg corresponds to a weight of 5 N = 500 cN.

5.01.04 Gauging office, German Calibration Office DKD

The standards used here, documented by calibration certificates, represent the unquestionable proof of the traceability in accordance with DIN ISO **9000,** and are internationally recognised through multilateral agreements.

The higher-ranking institution for the entire calibration services in Germany is the PTB (Federal Institute for scientific and technical services).

5.02 Calibration procedure

The calibration takes place as described in the calibration certificate at the end of this manual. All calculated or set values must be recorded in the appropriate calibration certificate.

5.02.01 Check / adjust the needle reference position

(Item **1** of the calibration certificate)

- Log-in as administrator.
- Call up the “tools” function.
- Call up the service menu.
- Call up the “drives” function.

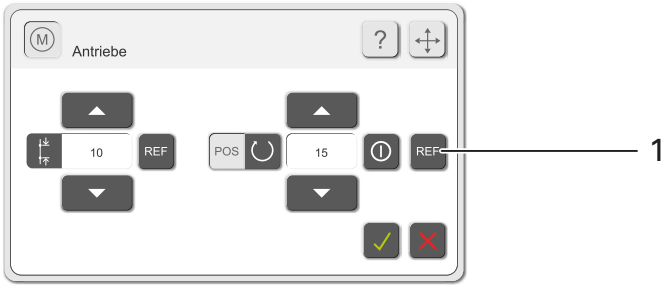

- Select function **1.**
- If necessary move the needle to its t.d.c. using the balance wheel.
- Acknowledge the adjustment.
- Enter the value, which can be found in the parameter list under parameter **700,** in the calibration certificate.
- Conclude the adjustment.
- Call up the mode selection function.

5.02.02 Check / adjust the trigger signals

(Item **2** of the calibration certificate)



- Call up the “tools” function.



- Call up the menu for adjusting the parameter values.

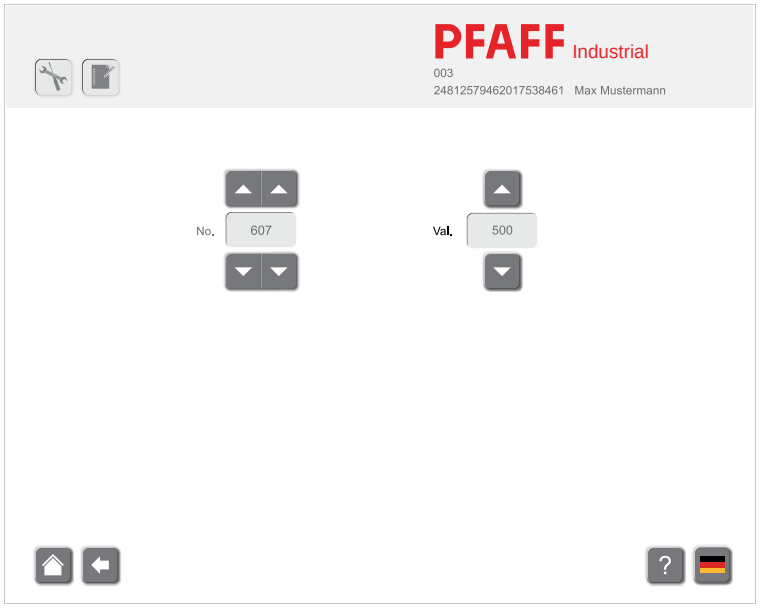

- By tapping the appropriate arrow symbol (“No.”) select parameter **607** for the maximum speed.
- By tapping the appropriate arrow symbol (“Val.”) enter the value “**500**”.



- Call up the mode selection function.



- Call up the seam program selection function and select the “manual” program by tapping on the list of programs.



- Call up the production function.

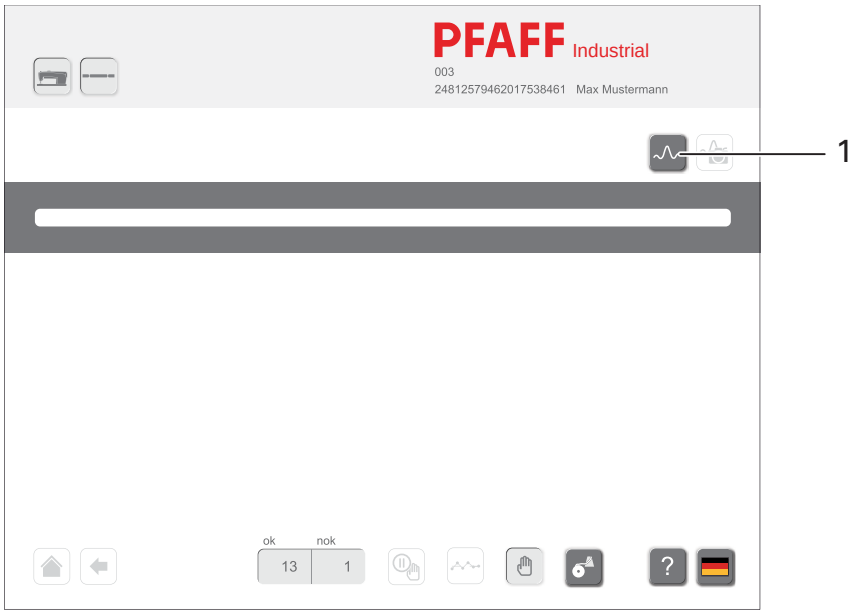

- Switch on the monitor with function **1.**
- Carry out a test seam.

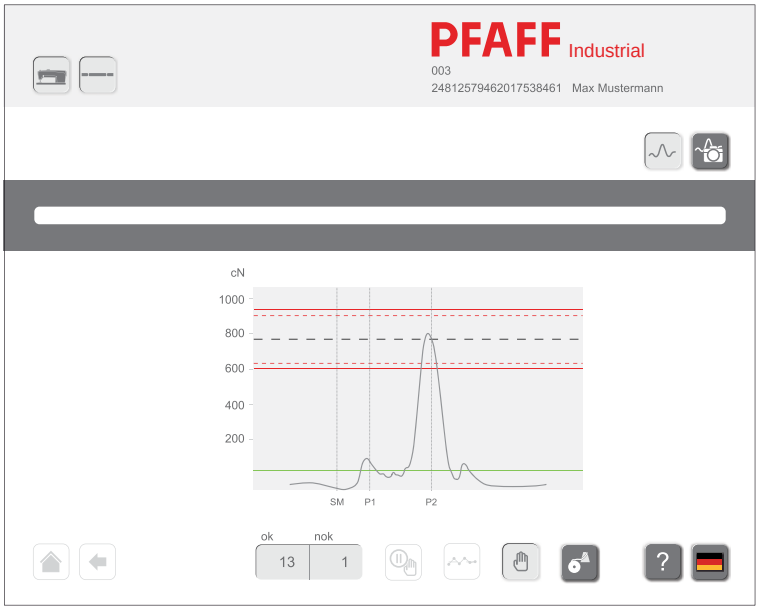

- Check, whether the trigger signals with the largest hook loop and in t.d.c. take-up lever are both in the maximum range of the thread strength signal.
- If necessary alter the value for parameter **2011** (largest hook loop, standard value: "**344**") accordingly.
- If necessary alter the value for parameter **2013** (t.d.c. take-up lever, standard value: "**74**") accordingly.
- Carry out another test seam and check the altered value.
- If necessary repeat the procedure until the setting for the trigger signals is correct.
- Enter the values for the speed (**500** min-**1**) and for the parameters **2011** and **2013** in the calibration certificate.



- Call up the mode selection function.

5.02.03 Check the zero position of the monitor power signal

(Item **3** of the calibration certificate)



- Call up the "tools" function.



- Call up the menu for adjusting the parameter values.
- Call up parameter **2010.**
- Check whether the value "**244**" is set. If necessary enter this value.



- Call up the mode selection function.

5.02.04 Checking the setting of the sewing head

(Item **4** of the calibration certificate)

- Check the mechanical setting of the sewing head in accordance with the Adjustment Manual and adjust the sewing head if necessary.

5.02.05 Recording the characteristic thread strength curve

(Item **5** of the calibration certificate)

A synthetic thread size **40** is recommended as calibration thread (to which the calibration weight is attached).

The free movement of the ball bearings of the calibration equipment must be ensured.



- Call up the “tools” function.



- Call up the “calibration” function.

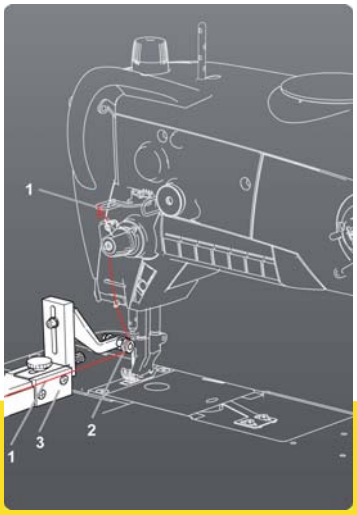

_The calibration thread **1** must be fastend at the thread guide (lose loop).

_Guide the calibration thread **1** through the guides as shown in the service manual, but instead to thread through the needle, guide the thread from the eyelet at the needle bar to the bearing **2** at the calibration device **3**



- Follow the instructions on the touch-screen monitor.



- Scroll on.

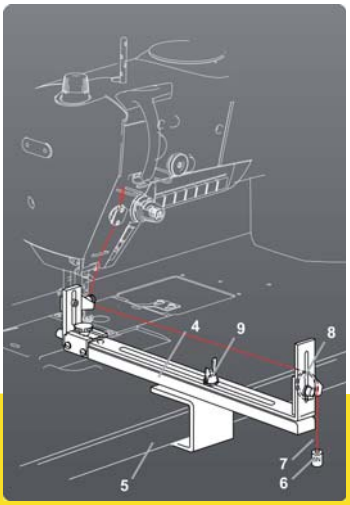

_The calibration device must be fastend at the table top to place the calibration weight according to the picture

_The length of the vertical thread piece after the two turn around the second bearing **8** should be approx. **250** mm

_The rquired length of the calibration device **4** can be adjusted with the wing nut **9.**

- Follow the instructions on the touch-screen monitor.

- Scroll on.

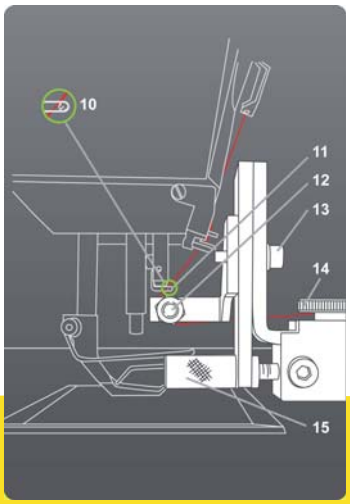

_Take off the needle and the presser foot.

_Turn the balance wheel and pos. the M/C in top dead center take up lever (**66°** balance wheel scale).

_Turn bearing **12** must be set below the needle bar eyelet by using screw **13.**

_With the knurl screw **15** move the red calibration thread horizontal until it touchs slightly the thread guide at the needle bar **11** (see diagram **10**).

_Fix the correct position with knurl screw **14.**

- Follow the instructions on the touch-screen monitor.

- Conclude the preparation.

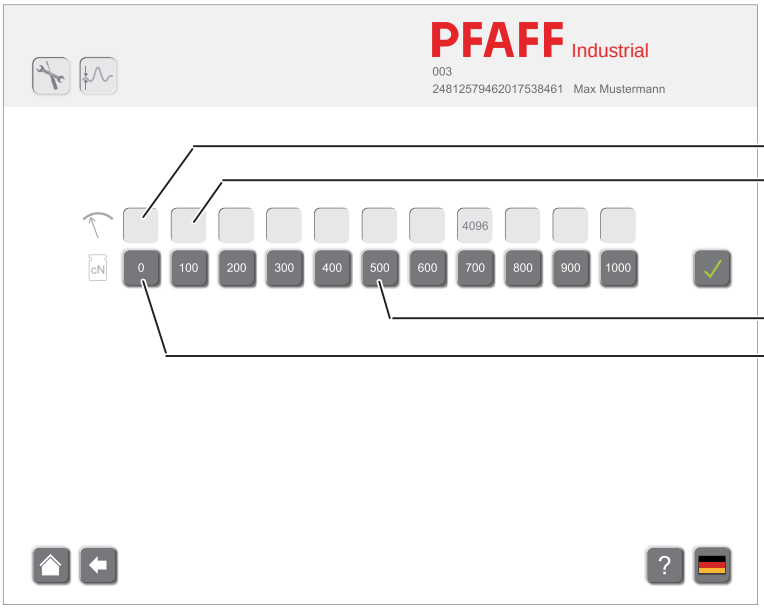

- Call up function **1.**
- Do not attach a weight, or remove the weight.

- Acknowledge the measurement.
  The measured value appears in box **2.**

- Record the value from box **2** in the calibration certificate.
- Call up function **3.**
- Attach appropriate weight (**500** cN)

- Acknowledge the measurement.
  The measured value appears in box **4.**

- Record the value from box **4** in the calibration certificate.
- Carry out all measurements from **100** cN to **1000** cN in succession and record the corresponding values in the calibration certificate.

- After completing all measurements, quit the calibration menu.

5.03 Checking the calibration (calibration result)

- Carry out the calibration as described in Chapter **5.02** Calibration procedure.



- Call up the service menu.



- Call up the sensor function.

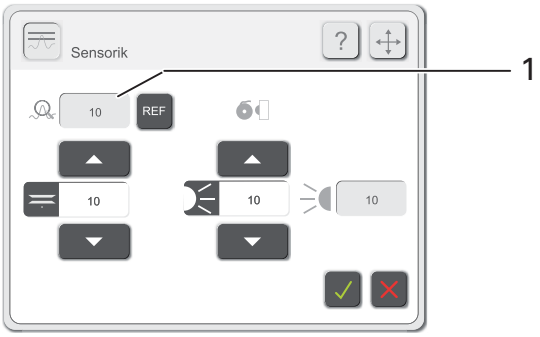

- Attach the calibration weight (**500** cN) to the thread and wait until the pendulum movements have stopped.
- Record the measured value shown in box **1** in the calibration certificate.
- Repeat the measurements four more times and record each value in the calibration certificate. The measured value must always be within the range of **500** cN +/- **30** cN.
- If there are deviations, the characteristic thread strength curve must be re-recorded in accordance with Chapter **5.02.05 Characteristic thread strength curve**.



- Quit the menu.



- Call up the mode selection function.

PFAFF® Industrial PFAFF Industriesysteme und Maschinen AG, 67661 Kaiserslautern

Calibration certificate fort the PFAFF-DOCU-SEAM-SYSTEM

Customer:.....

Address:.....

Machine: **PFAFF 3741**..... Serial-No.: .....

Machine: **PFAFF 3741**..... Serial-No.: .....

PC-software: ..... Control software:.....

Reference value of weight for standard measuring range: **5 N = 500 cN**

Traceability to national standard, guaranteed iaw DIN ISO 9000
by Gauging Office Albstadt, number of calibration certificate:.....

End value of measuring range: 1500 cN Accuracy: +/- 2%

Calibration procedure:

1. Needle reference position:	(Parameter 700)	.....	O
2. Trigger signals:	Speed	.....min^{-1}	O
	Parameter 2010	.....	O
	Parameter 2011	.....	O
3. Zero position of the monitor power signal:	Parameter 2013	.....	O
4. Sewing head setting			O

5. Characteristic thread strength curve

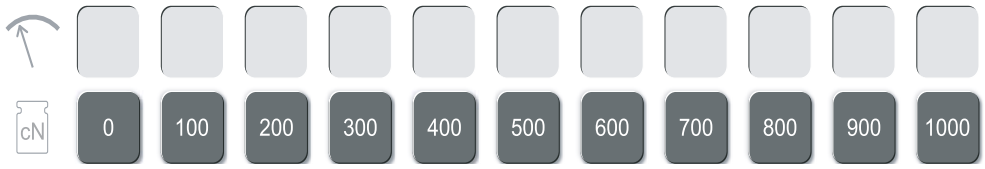

Check calibration result with 500cN

Reading	1	2	3	4	5
Measured value [cN]					
Deviation from standard [cN]					

Permissible measuring inaccuracy: +/- **2%** of end value of measuring range = +/- **30** cN.
Evaluation: All measuring values are in the limits for the specific product.

Place:..... Date:..... Testing person:.....

6 Circuit diagrams

6.01 Pneumatics-switch diagram PFAFF 3741 + 3745

The control elements and valves are in the machine's basic position.Main switch -ON, compressed air -ON

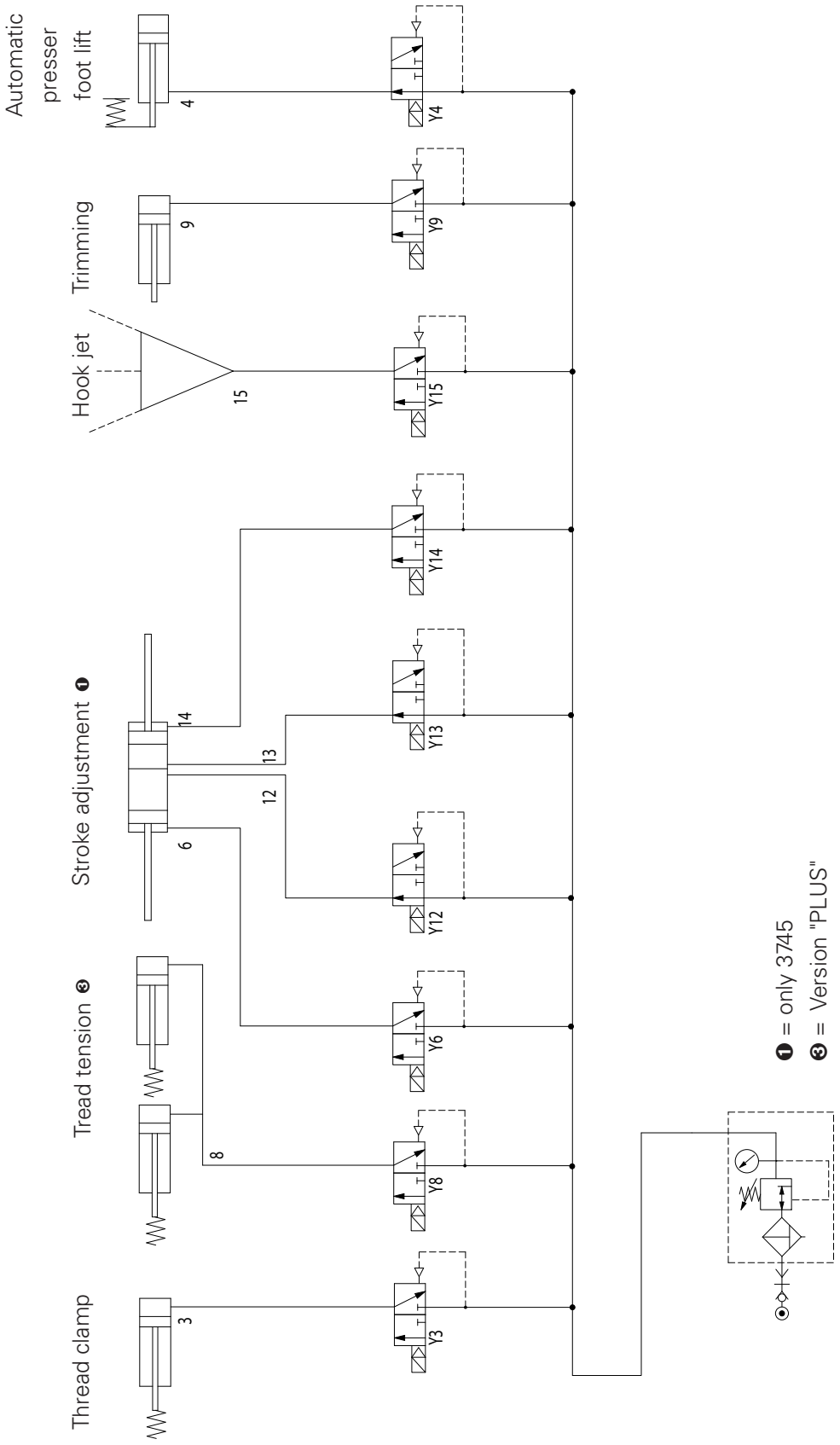

6.02 Block diagram PFAFF 3741 + 3745 (with control unit P374 ED)

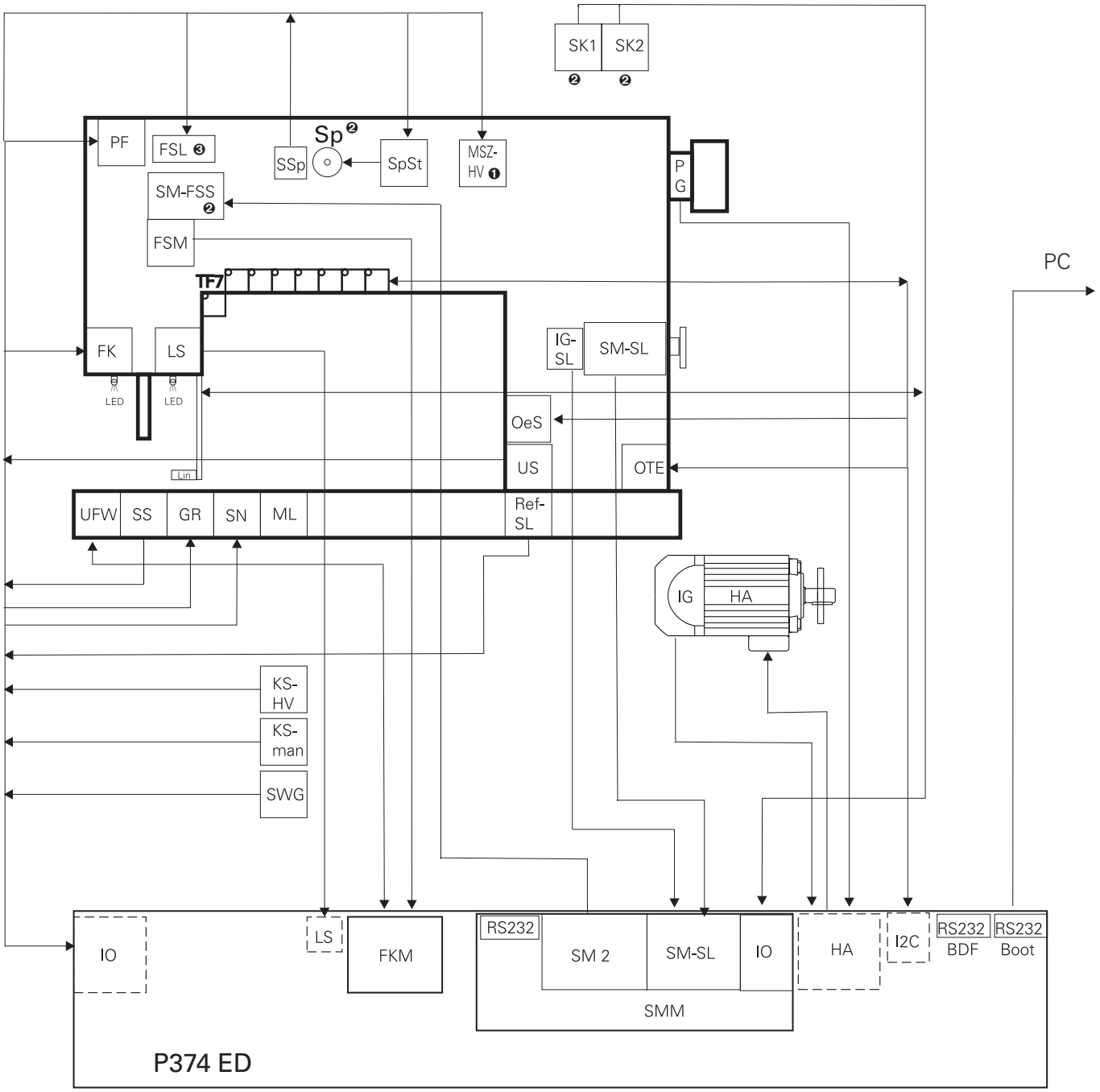

❶ = only 3745
❷ = Version "PREMIUM"
❸ = Version "PLUS"

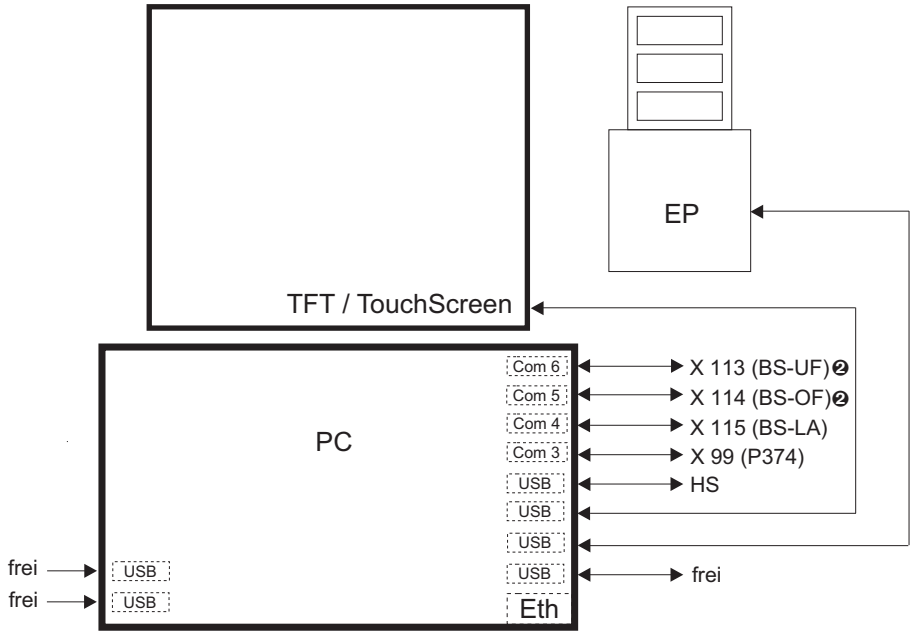

P374ED	**Control unit**
HA	Main drive
IG	Incremental transmitter
PG	Synchronizer
SWG	Speed control unit
SMM	**Stepping motor module in P374EDD**
SM-SL	Stepping motor feed regulator
IG-SL	Incremental transmitter feed regulator SM
Ref-SL	Reference sensor feed regulator
SM-FSS	Stepping motor thread tension release control
IO	**Input / Output**
SK1	Switch cop 1
SK2	Switch cop 2
Lin	Edge guide with distance control
SS	Slide switch
KS-man	Knee switch manual seam
KS-HV	Knee switch stroke adjustment
US	Reverse fuse
MSZ-HV	Stroke adjustment
PF	Presser foot
FK	Thread clamp
SN	Thread trimmer
ML	Motor running signal (free)
GR	Clean hook
LS	Light barrier
FSL	Release thread tension

PC	**Docu-seam-PC**
TFT	Monitor with touch-screen
EP	Label printer
HS	Barcode hand-held scanner (ID)
BS-LA	**Barcode scanner (label)**
BS-OF	Barcode scanner (needle thread cop)
BS-UF	Barcode scanner (bobbin thread cop)
I2C	**Interface to head**
OTE	Sewing head recognition
OeS	Oil sensor
TF7	Keypad
FKM	**Thread strength module in P374ED**
FSM	Thread tension measurement
UFW	Bobbin thread monitoring
Sp	**Internal electric-powered bobbin winder**
SSp	Switch bobbin
SpSt	Bobbin control
LED	**LED lighting**

❷ = Version "PREMIUM"

6.03 Circuit diagrams

6.03.01 Reference list for the Circuit diagrams 91-191 528-95

A1	Controller P374 ED-L
A2	Control panel PicoTop (optional)
A14	Sewing head recognition (OTE)
A15	Oil sensor (I2C-Bus)
A16	Keyboard (I2C-Bus)
A20	Bobbin thread monitor
B7	Light barrier
B10	Thread strength sensor
B31	Initiator feed regulator
B33	Initiator slider monitoring
B38	Initiator camera-read position
B41	Oil sensor (I2C-Bus)
H1	Sewing lamp
M1	Sewing motor
M2	Stepping motor stitch length
M11	Motor electrical bobbin winder
M14	Stepping motor thread tension
Q1	Main switch
S1.1	Pedal speed control unit
S1▲ - S8▲	Key 1 - Key 8
S22	Key electrical bobbin winder
S24	Seam section (optional)
S26	Key switchover fuse
S27	Stroke adjustment (option) ❶
S51	Cop switch needle thread
S52	Cop switch bobbin thread
X0	RS 232 interface (PC)
X1	Sewing motor
X1A	RS 232/485 interface (PC)
X2	Incremental transmitter
X2.1	Incremental transmitter
X2.2	Synchronizer PD 6
X3	Speed control unit
X4	PicoTop control panel
X4/A	Stepping motor thread tension
X4/B	Stepping motor feed regulator

▲ Function depends on parameter selection ❶ = only 3745

X5	Output-input plug
X6	Light barrier plug
X11	not assigned
X20	A20 bobbin thread monitor and B19 thread strength sensor
X24	Knee switch seam section (optional)
X27	Knee switch stroke adjustment (optional) ❶
X44	Stepping motor thread tension
XA14	A14 Sewing head recognition (OTE)
XA15.1	A15 Oil sensor (I2C-Bus)
XA15.2	A15 Oil sensor (I2C-Bus) >
A14	(OTE) (I2C-Bus)
XA16	A16 Keyboard (I2C-Bus)
XB31	B31 Initiator feed regulator
XB33	B33 Initiator slider monitoring
XS22	S22 Key electrical bobbin winder
XS24	Knee switch seam section
XS26	S24 Seam section (optional)
XS27	S27 Knee switch stroke adjustment ❶
XS50	Cop switch S51 and S52
XS51	Cop switch S51
XS52	Cop switch S52
XL10	Edge guide
XY3	-909/..Y 3 Thread clamp
XY4	-910/..Y 4 Presser foot lift
XY6	-918/..Y 6 Stroke adjustment 1 ❶
XY8	Y8 Thread tension release
XY9	-900/..Y 9 Thread trimmer
XY12	-918/..Y 12 Stroke adjustment 2 ❶
XY13	-918/..Y 13 Stroke adjustment 3 ❶
XY14	-918/..Y 14 Stroke adjustment 4 ❶
XY15	-926/.. Y 15 Hook cleaning A20 Bobbin thread monitor
Y3	-909/.. Thread clamp
Y4	-910/.. Presser foot lift
Y6	-918/.. Stroke adjustment 1 ❶
Y8	Main thread tension release
Y9	-900/.. Thread trimmer
Y12	-918/.. Stroke adjustment 2 ❶
Y13	-918/.. Stroke adjustment 3 ❶
Y14	-918/.. Stroke adjustment 4 ❶
Y15	-926/.. Hook cleaning A20 Bobbin thread monitor

❶ = only 3745

6.03.02 Reference list for the Circuit diagrams 91-191 536-95

A1	Controller P374 ED-L
A100	PC
A101	Touchscreen monitor
A104	Barcode label printer
B102	Barcode hand-held scanner
B110	Barcode scanner (label)
B111	Barcode scanner (needle thread cop)
B112	Barcode scanner (bobbin thread cop)
A1	Controller P374 ED-L
A100	PC
A101	Touchscreen monitor
A104	Barcode label printer
B102	Barcode hand-held scanner
B110	Barcode scanner (label)
B111	Barcode scanner (needle thread cop)
B112	Barcode scanner (bobbin thread cop)
X0	RS 232 controller interface P374 ED-L
X98	Plug from PCI Seriel RS-232 carde
X99	RS 232 Adapter X98-X0
X100	Mains plug PC
X101	USB- plug PC-A101 touchscreen monitor
X102	USB- plug PC- B102 Barcode hand-held scanner
X103	USB- plug PC-free
X104	USB- plug PC-XUSB7 Barcode label printer
X105	USB plug PC-free
X106	USB plug PC-free
X107	USB plugPC-free
X108	USB plug PC-free
X109	USB plug PC- A101 touchscreen monitor
X110	B110 Barcode scanner (needle thread cop)
X111	B111 Barcode scanner (needle thread cop)
X112	B112 Barcode scanner (label)
X113	Interfaces distributors B110 Barcode scanner (bobbin thread cop)
X114	Interfaces distributors B111 Barcode scanner (needle thread cop)
X115	Interfaces distributors B112 Barcode scanner (label)

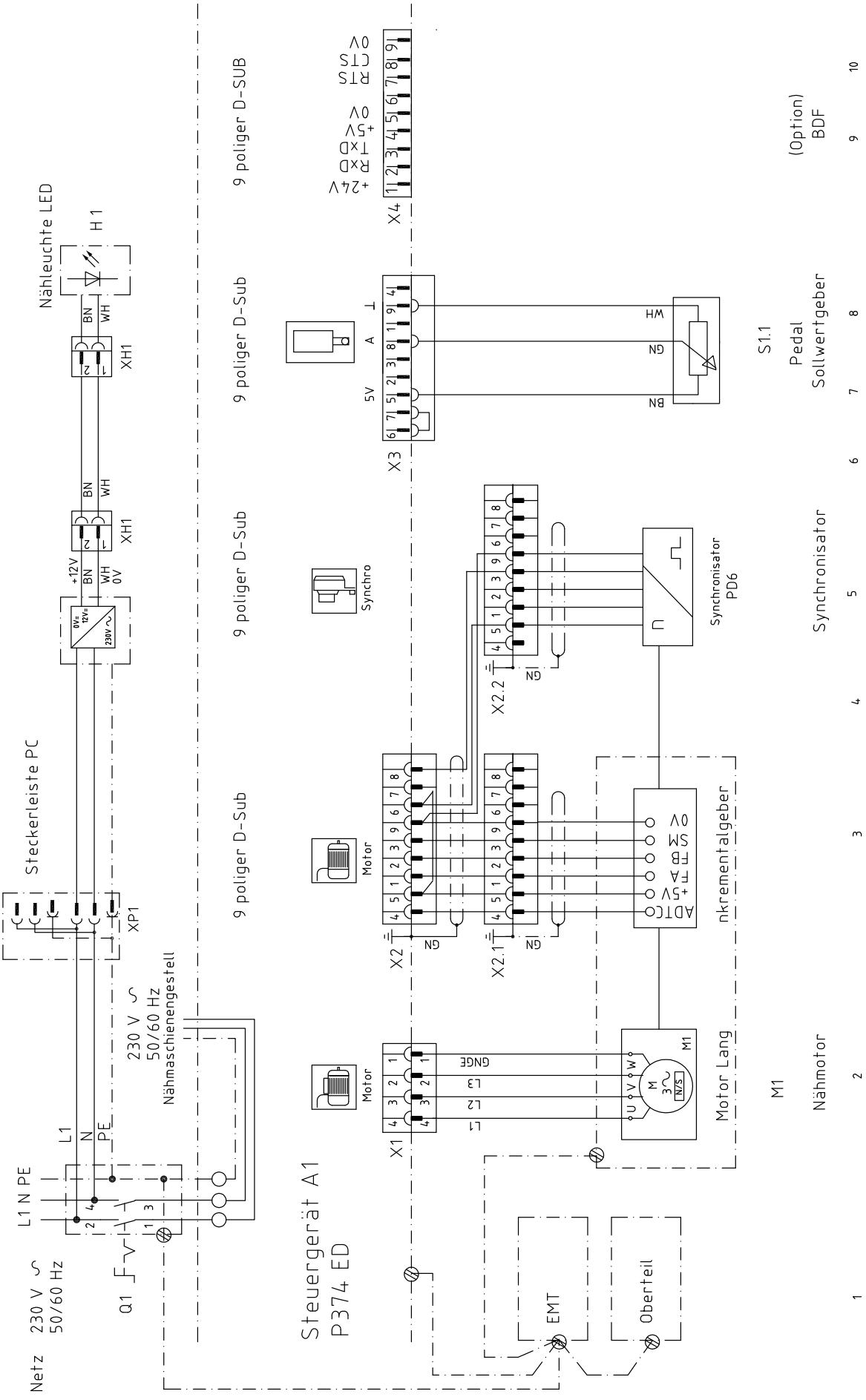
Steuergerät A1
P374 ED
Netz 230 V ~ 50/60 Hz
L1 N PE
Q1
230 V ~ 50/60 Hz
Nähmaschienengestell
Steckerleiste PC
XP1
Nähleuchte LED
H 1
XH1
+12V
0V
9 poliger D-Sub
9 poliger D-SUB
Synchro
Motor
X1
X2
X2.1
X2.2
X3
X4
Synchronisator PD6
Synchronisator
Pedal Sollwertgeber
S1.1
(Option) BDF
Motor Lang
Nähmotor
M1
EMT
Oberteil

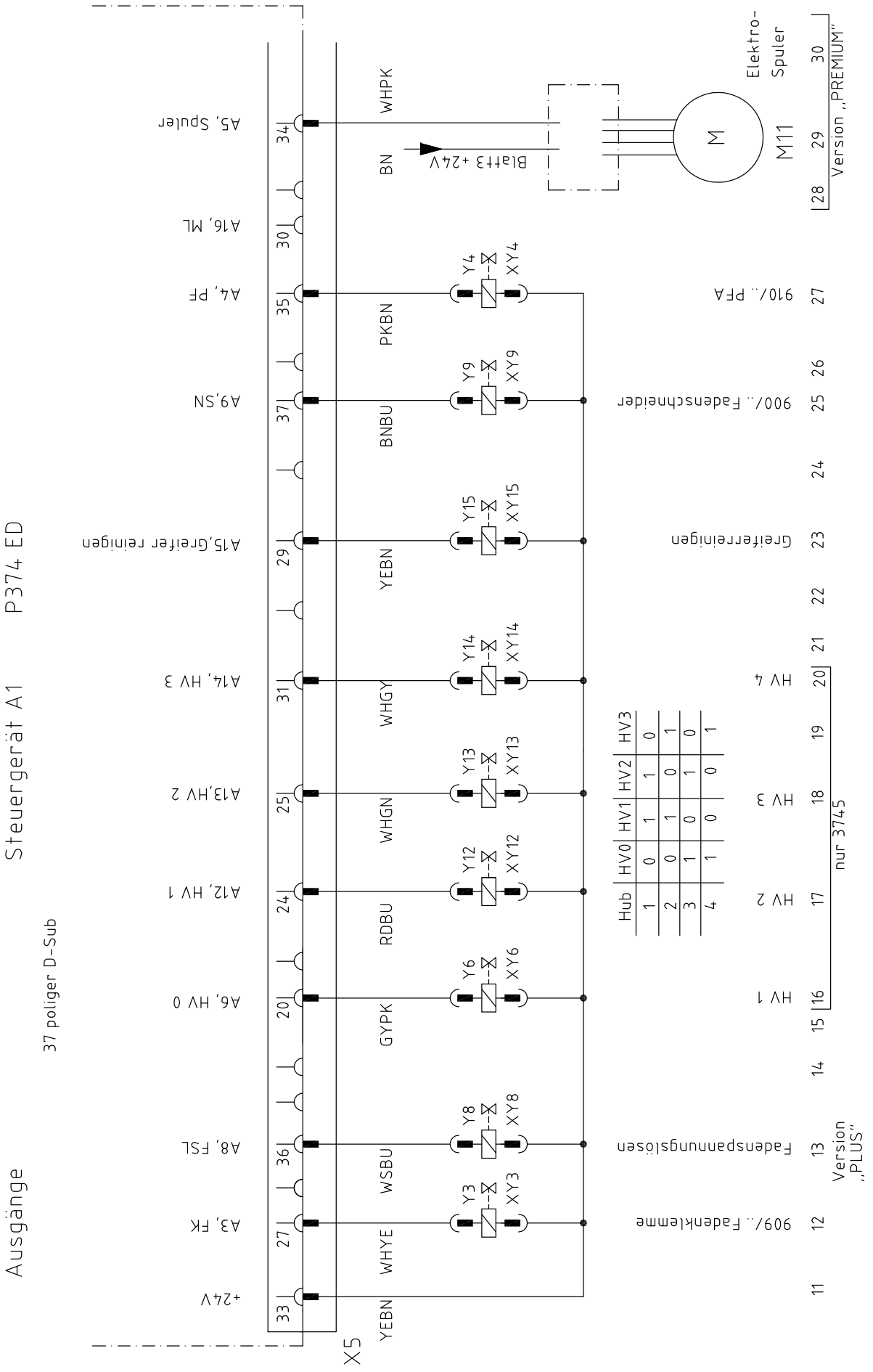
Steuergerät A1 P374 ED
Ausgänge
37 poliger D-Sub
X5
+24V
A3, FK
A8, FSL
A6, HV 0
A12, HV 1
A13,HV 2
A14, HV 3
A15,Greifer reinigen
A9,SN
A4, PF
A16, ML
A5, Spuler
YEBN
WHYE
WSBU
GYPK
RDBU
WHGN
WHGY
YEBN
BNBU
PKBN
BN
WHPK
Blatt3 +24V
909/.. Fadenklemme
Fadenspannungslösen
HV 1
HV 2
HV 3
HV 4
Greiferreinigen
900/.. Fadenschneider
910/.. PFA
Elektro-
Spuler
M11
Version „PREMIUM"
Version „PLUS"
nur 3745
Hub HV0 HV1 HV2 HV3
1 0 1 1 0
2 0 1 0 1
3 1 0 1 0
4 1 0 0 1

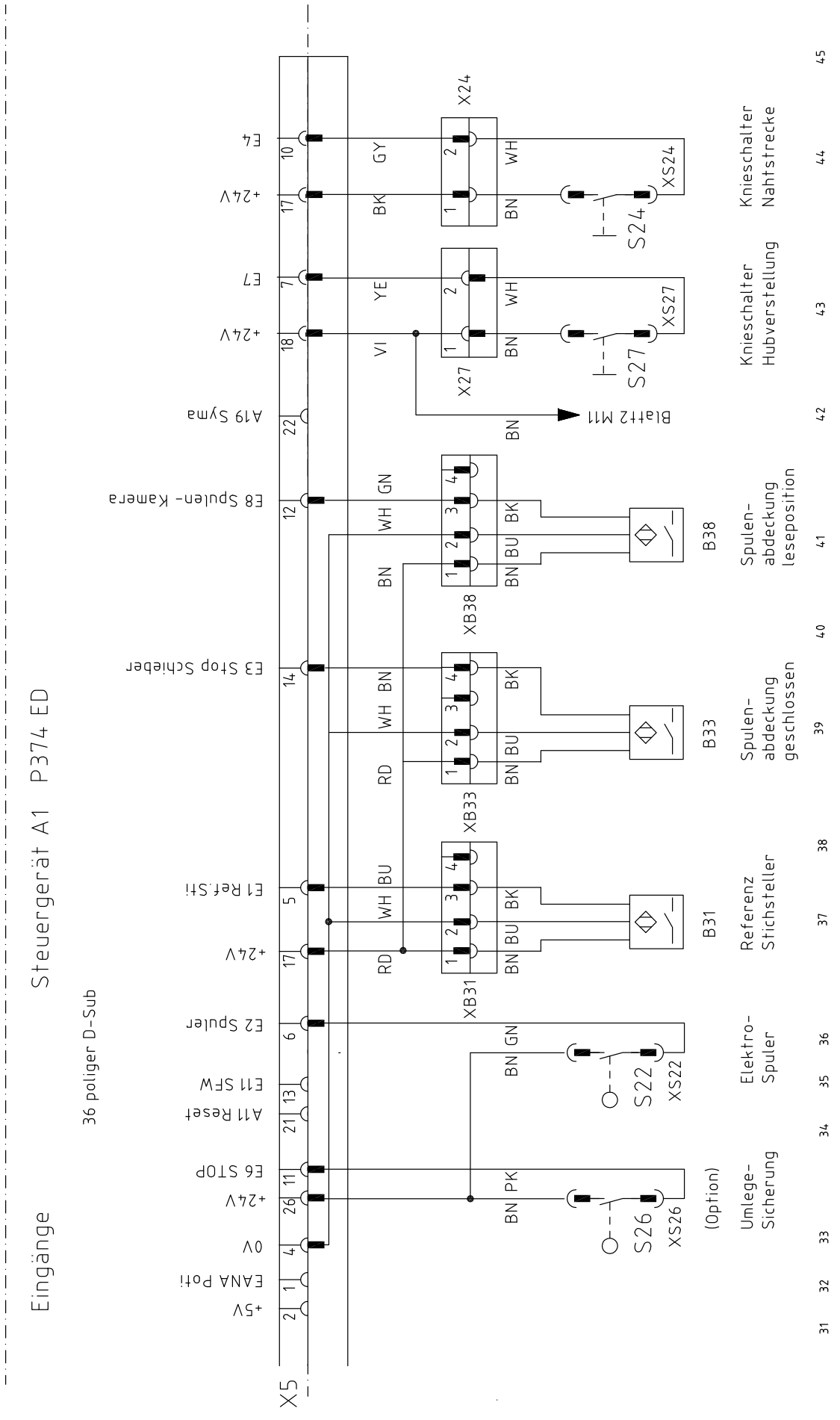
Steuergerät A1 P374 ED
Eingänge
36 poliger D-Sub
X5
+5V
EANA Poti
0V
+24V
E6 STOP
A11 Reset
E11 SFW
E2 Spuler
+24V
E1 Ref.Sti
E3 Stop Schieber
E8 Spulen- Kamera
A19 Syma
+24V
E7
+24V
E4
XB31
XB33
XB38
X27
X24
B31
B33
B38
S22
S26
S27
S24
XS22
XS26
XS27
XS24
Blatt2 M11
Referenz Stichsteller
Spulen- abdeckung geschlossen
Spulen- abdeckung leseposition
Elektro- Spuler
Umlege- Sicherung
(Option)
Knieschalter Hubverstellung
Knieschalter Nahtstrecke

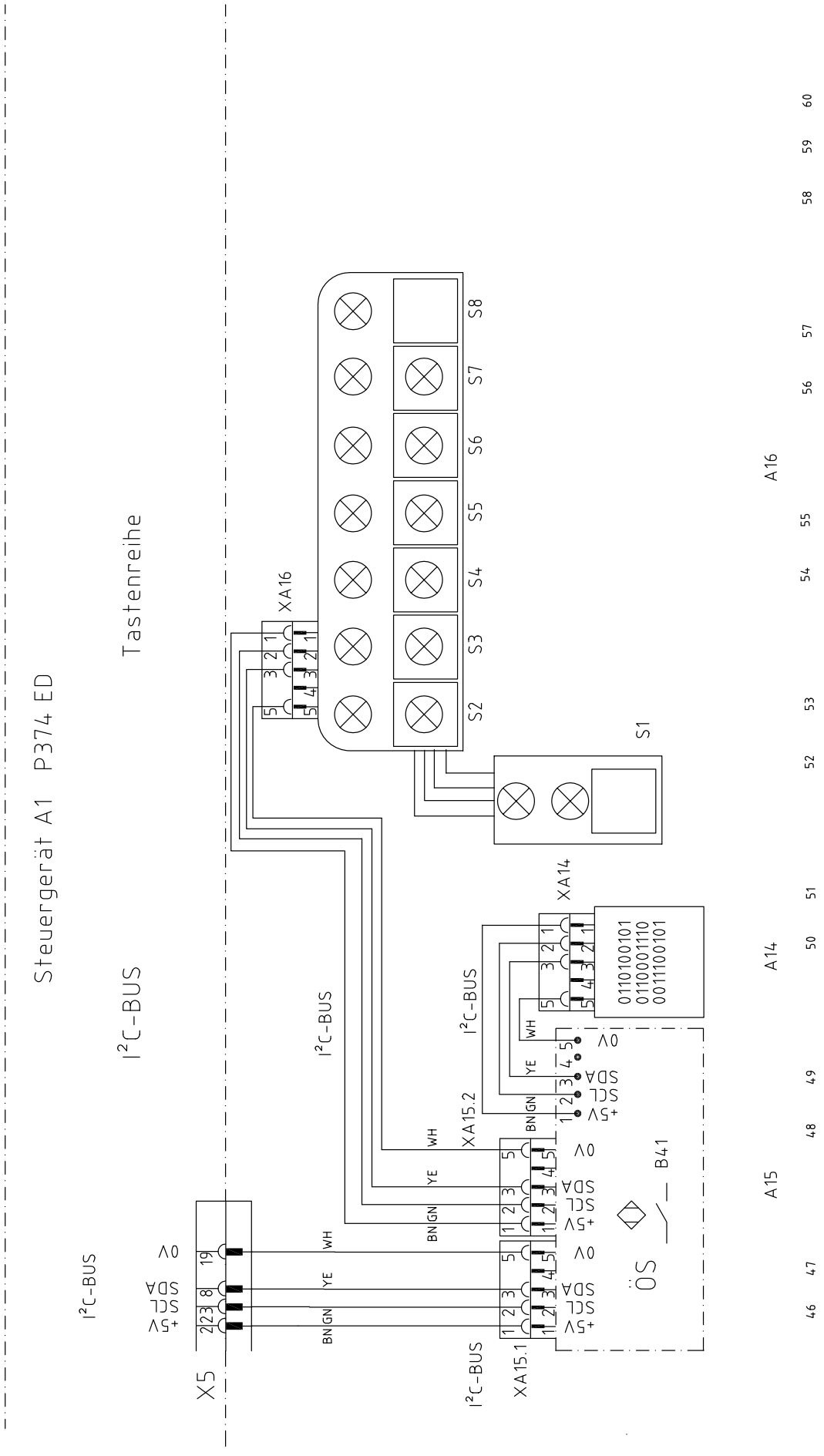
Steuergerät A1 P374 ED
Tastenreihe
I²C-BUS
X5
XA16
XA14
XA15.1
XA15.2
S1
S2
S3
S4
S5
S6
S7
S8
A14
A15
A16
B41
ÖS
0V
SDA
SCL
+5V
WH
YE
BN
GN
0110100101
0110001110
0011100101
46
47
48
49
50
51
52
53
54
55
56
57
58
59
60

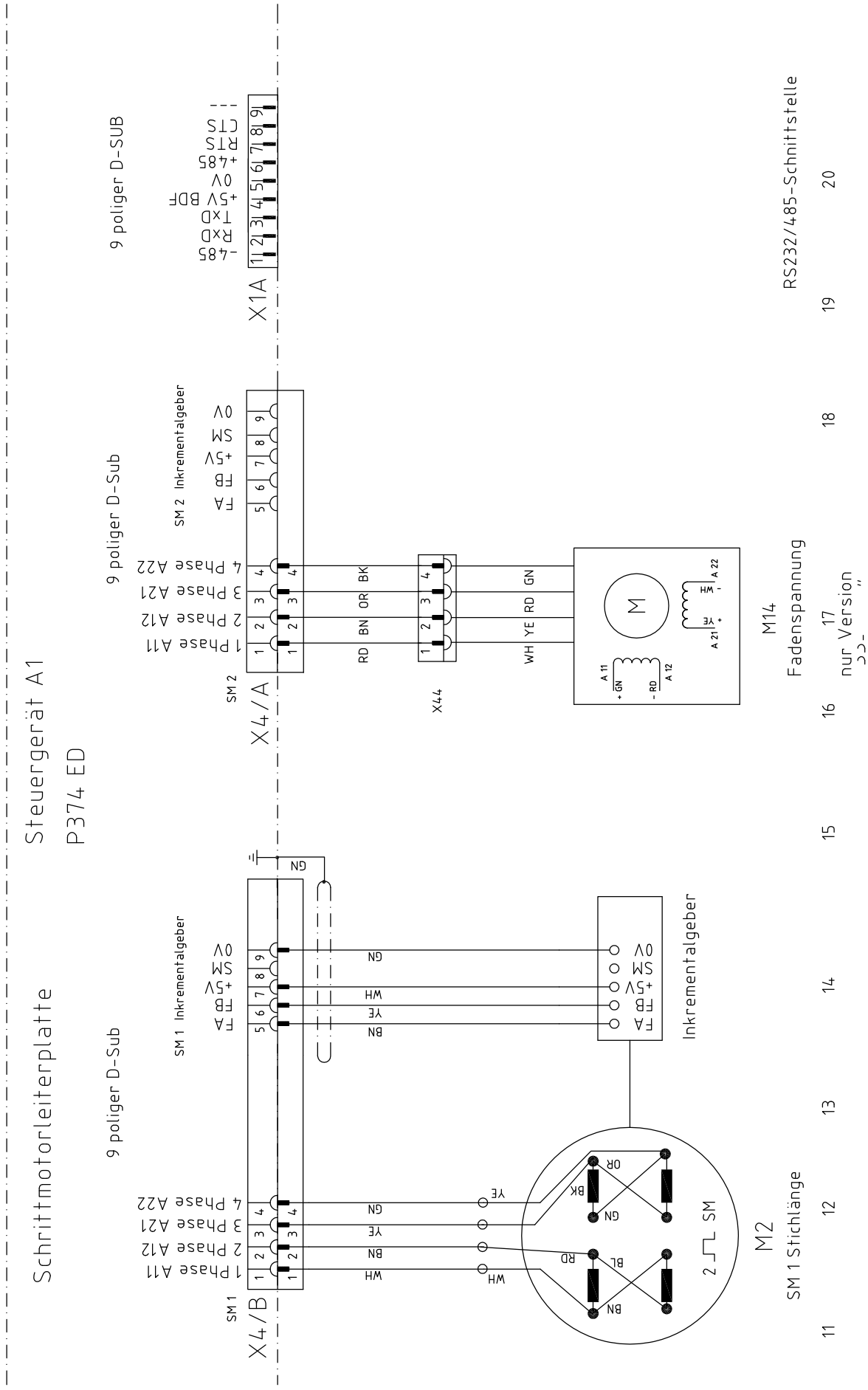
Steuergerät A1
P374 ED
Schrittmotorleiterplatte
9 poliger D-Sub
X1A
-485
RXD
TXD
+5V BDF
0V
+485
RTS
CTS
9 poliger D-Sub
SM 2 Inkrementalgeber
X4/A
SM 2
1 Phase A11
2 Phase A12
3 Phase A21
4 Phase A22
TA
TB
+5V
SM
0V
RD BN OR BK
X44
WH YE RD GN
M
A 11
A 12
A 21
A 22
M14
Fadenspannung
RS232/485-Schnittstelle
nur Version "CC"
9 poliger D-Sub
SM 1 Inkrementalgeber
X4/B
SM 1
GN
BN YE WH GN
Inkrementalgeber
M2
SM 1 Stichlänge
2 SM
BK OR GN BL RD BN
11 12 13 14 15 16 17 18 19 20

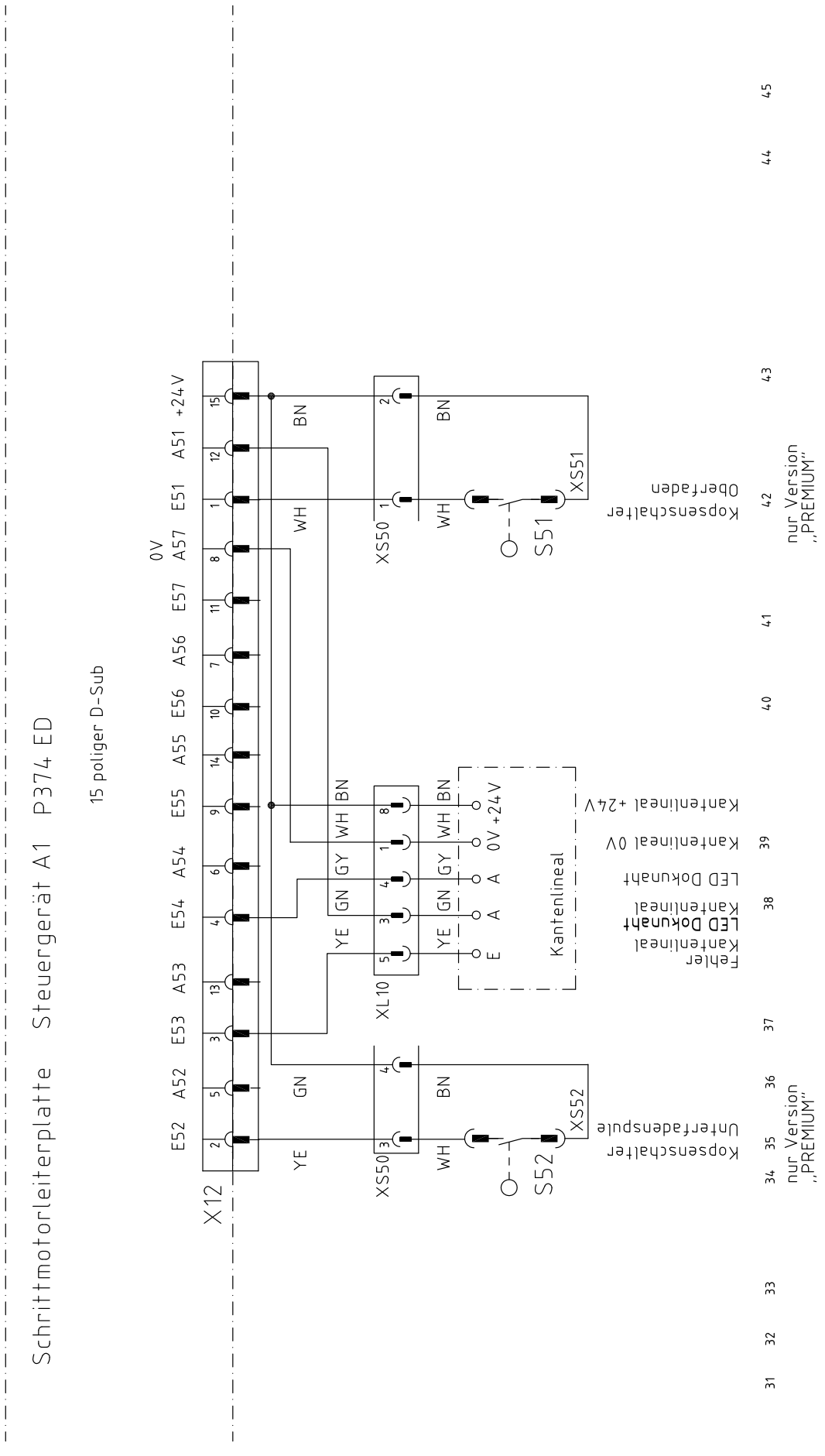
Schrittmotorleiterplatte Steuergerät A1 P374 ED
15 poliger D-Sub
X12
E52 A52 E53 A53 E54 A54 E55 A55 E56 A56 E57 A57 E51 A51 +24V
0V
XS50
XL10
XS51
XS52
S51
S52
Kantenlineal
E A A 0V +24V
Kopenschalter Oberfaden
Kopenschalter Unterfadenspule
Fehler Kantenlineal
LED Dokunaht Kantenlineal
LED Dokunaht
Kantenlineal 0V
Kantenlineal +24V
nur Version „PREMIUM"
nur Version „PREMIUM"

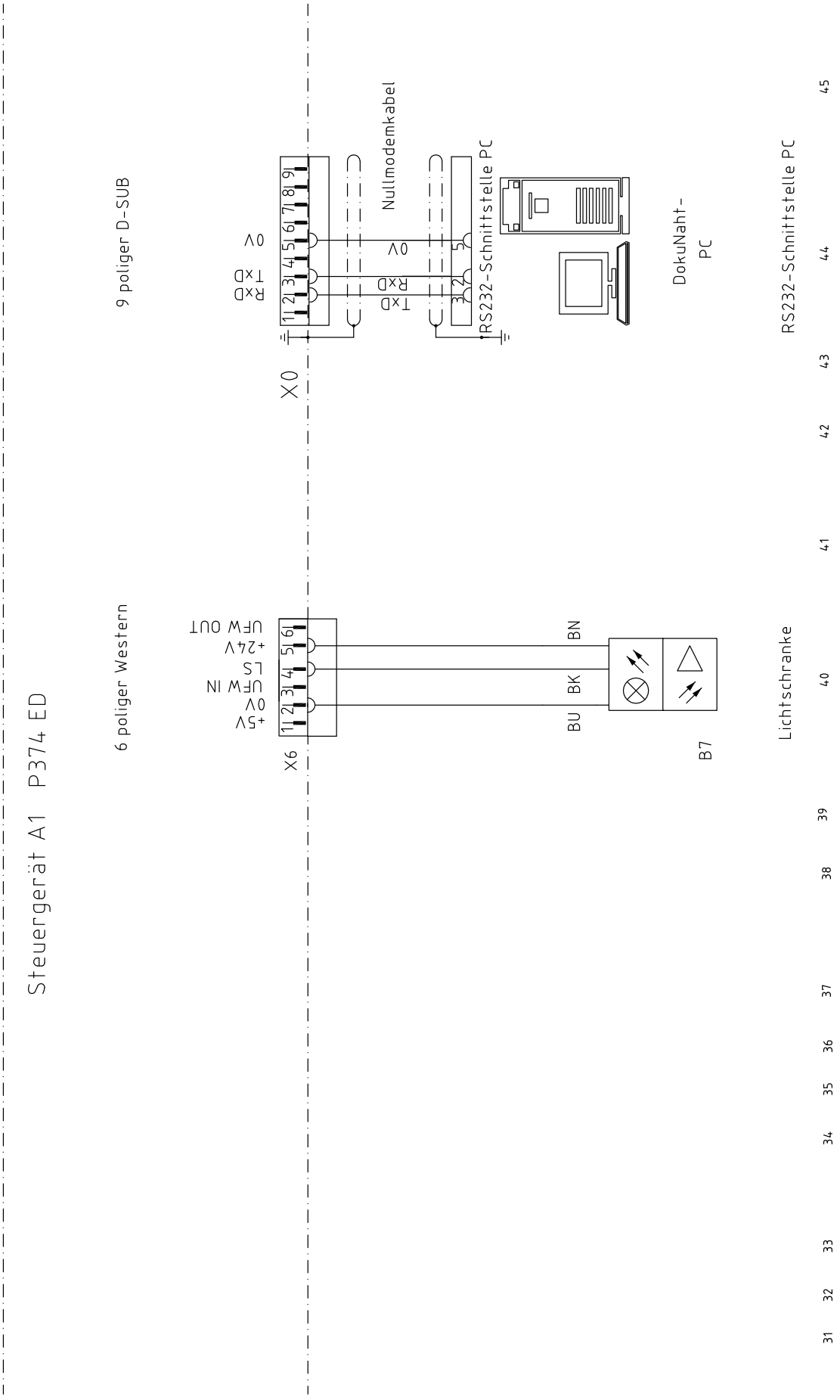
Steuergerät A1 P374 ED
9 poliger D-SUB
6 poliger Western
X0
X6
TxD
RxD
0V
Nullmodemkabel
RS232-Schnittstelle PC
DokuNaht-
PC
RS232-Schnittstelle PC
+5V
0V
CFW IN
CS
+24V
CFW OUT
BU
BK
BN
B7
Lichtschranke
31
32
33
34
35
36
37
38
39
40
41
42
43
44
45

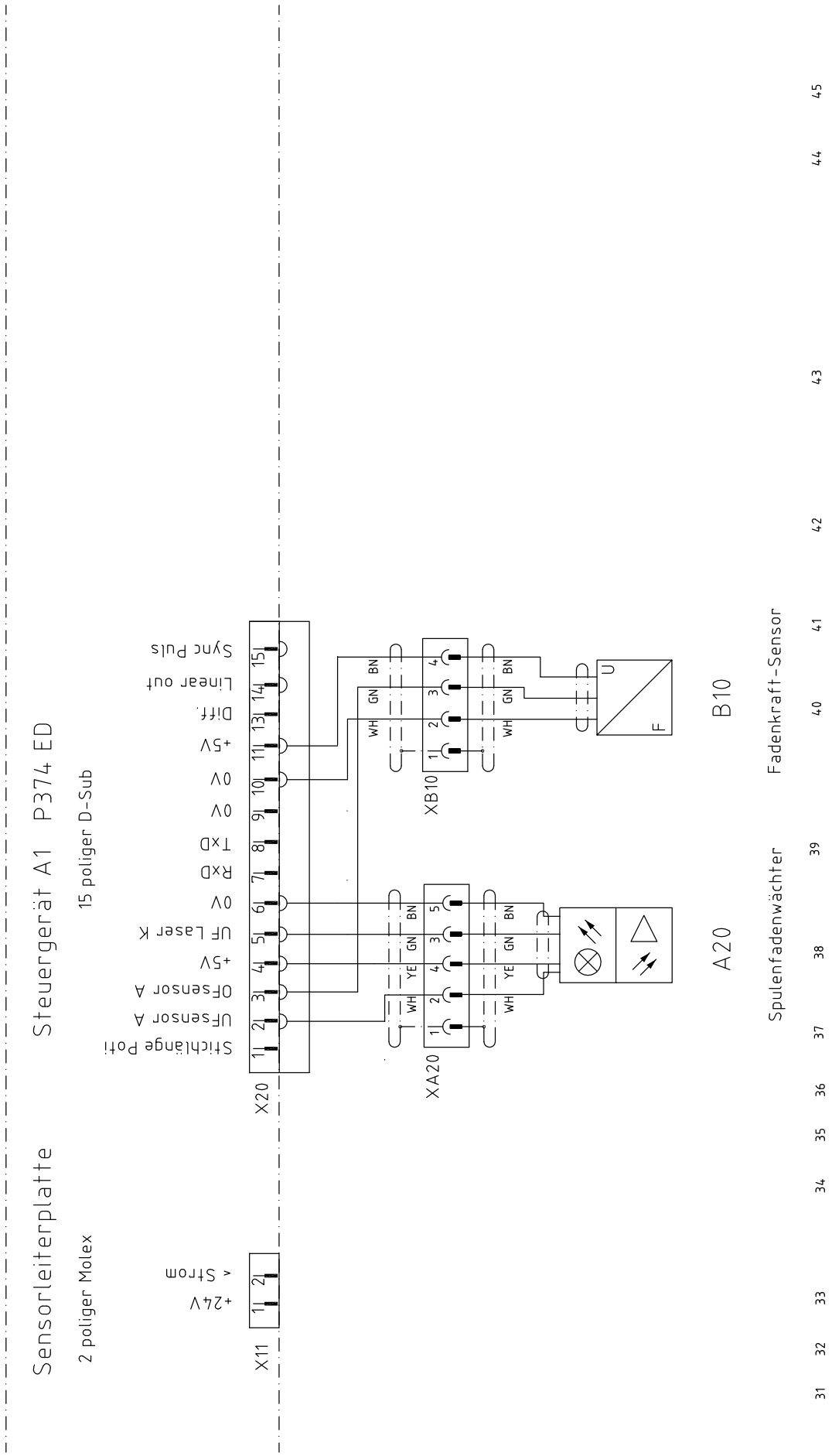
Sensorleiterplatte
Steuergerät A1 P374 ED
2 poliger Molex
15 poliger D-Sub
X11
+24V
< Strom
X20
Stichlänge Poti
UFsensor A
OFsensor A
+5V
UF Laser K
0V
RxD
TxD
0V
0V
+5V
Diff.
Linear out
Sync Puls
XA20
XB10
WH
YE
GN
BN
A20
B10
Spulenfadenwächter
Fadenkraft-Sensor
U
F
31 32 33 34 35 36 37 38 39 40 41 42 43 44 45

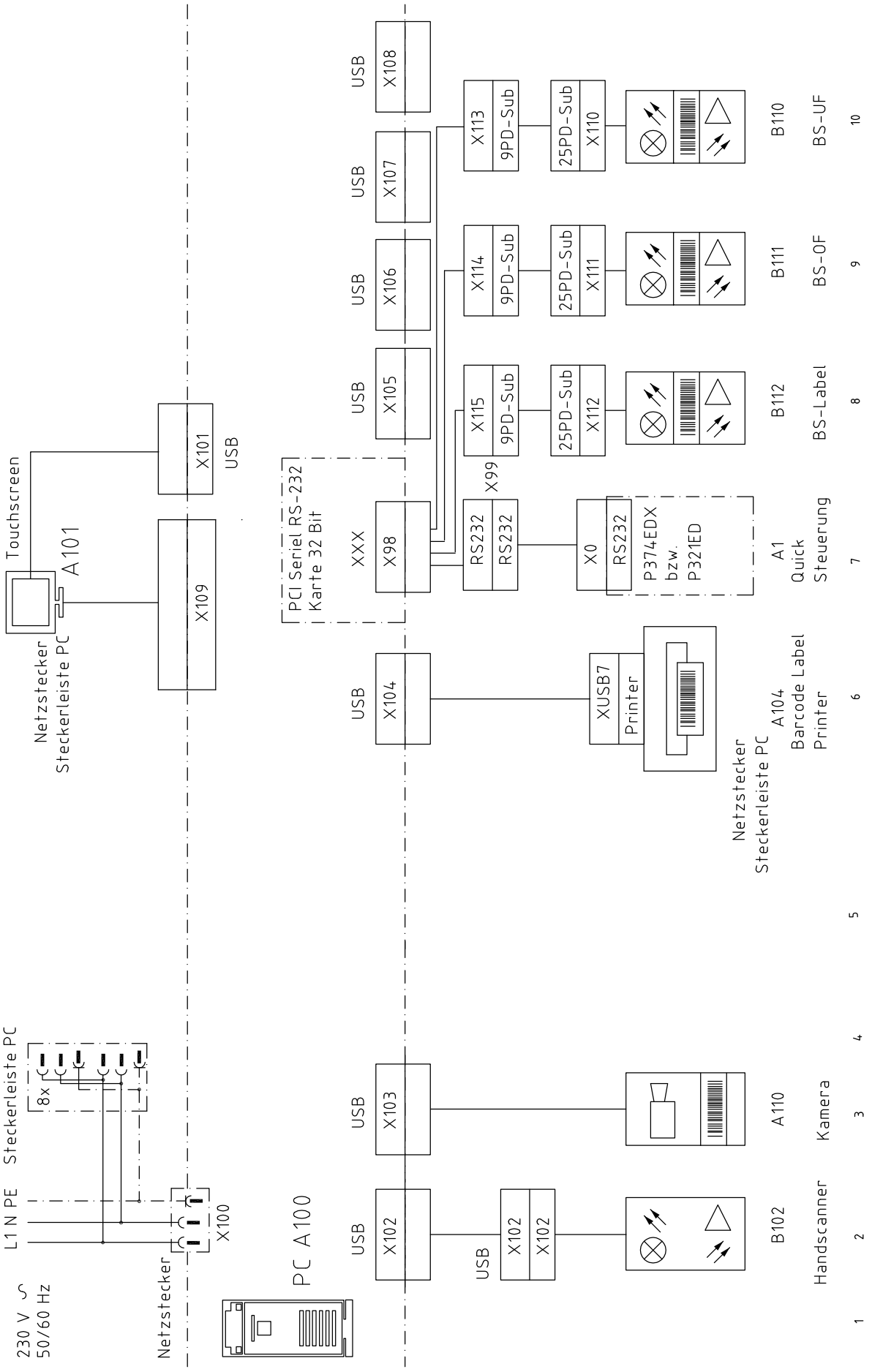
230 V ~
50/60 Hz
L1 N PE
Steckerleiste PC
8x
Netzstecker
X100
PC A100
USB
X102
X102
X102
B102
Handscanner
X103
A110
Kamera
X104
XUSB7
Printer
A104
Barcode Label
Printer
Netzstecker
Steckerleiste PC
X98
XXX
PCI Seriel RS-232
Karte 32 Bit
RS232
RS232
X99
X0
RS232
P374EDX
bzw.
P321ED
A1
Quick
Steuerung
X105
X115
9PD-Sub
25PD-Sub
X112
B112
BS-Label
X106
X114
9PD-Sub
25PD-Sub
X111
B111
BS-OF
X107
X113
9PD-Sub
25PD-Sub
X110
B110
BS-UF
X108
X109
X101
USB
Touchscreen
A101
Netzstecker
Steckerleiste PC
1
2
3
4
5
6
7
8
9
10

PFAFF® Industrial



Europäische Union
Wachstum durch Innovation – EFRE



PFAFF Industriesysteme
und Maschinen AG

Hans-Geiger-Str. 12 - IG Nord
D-67661 Kaiserslautern

Phone: +49-6301 3205 - 0
Fax: +49-6301 3205 1386
E-mail: info@pfaff-industrial.com

Hotlines:
Technical service: +49-175/2243-101
Application consultance: +49-175/2243-102
Spare-parts hotline: +49-175/2243-103

Printed in Germany

© PFAFF Industriesysteme und Maschinen AG 2009, PFAFF is the exclusive trademark of VSM Group AB.PFAFF Industriesysteme und Maschinen AG is an authorized licensee of the PFAFF trademark.