PFAFF® Industrial

3801-3/07, -3/071, -11/071

INSTRUCTION MANUAL

This instruction manual applies to machines from serial number **2 716 117** and software version **0352/011** onwards. →

296-12-18 590/002
Betriebsanleitung engl. 03.12



This Instruction Manual is valid for all models and subclasses listed in the chapter "Specifications".

The reprinting, copying or translation of PFAFF Instruction Manuals, whether in whole or in part, is only permitted with our previous authorization and with written reference to the source.

PFAFF Industriesysteme
und Maschinen AG

Hans-Geiger-Str. 12 - IG Nord
D-67661 Kaiserslautern

Contents ..... Chapter - Page

1	Safety	1 - 1
1.01	Directives	1 - 1
1.02	General notes on safety	1 - 1
1.03	Safety symbols	1 - 2
1.04	Important points for the user	1 - 2
1.05	Operating and specialist personnel	1 - 3
1.05.01	Operating personnel	1 - 3
1.05.02	Specialist personnel	1 - 3
1.06	Danger	1 - 4
2	Proper use	2 - 1
3	Specifications	3 - 1
4	Disposal of machines	4 - 1
5	Transport, packaging and storage	5 - 1
5.01	Transport to the customer's premises	5 - 1
5.02	Transport within the customer's premises	5 - 1
5.03	Disposal of the packaging	5 - 1
5.04	Storage	5 - 1
6	Explanation of the symbols	6 - 1
7	Controls	7 - 1
7.01	Main switch	7 - 1
7.02	Pedal	7 - 1
7.03	Lever for lifting the presser foot	7 - 2
7.04	Knee switch	7 - 2
7.05	Edge guide	7 - 3
7.06	Lever for retracting the tape-feeding unit (only on the PFAFF 3801-11/071)	7 - 3
7.07	Reverse-feed control lever	7 - 4
7.08	Control panel	7 - 5
8	Mounting and commissioning the machine	8 - 1
8.01	Mounting	8 - 1
8.01.01	Adjusting the table-top height	8 - 1
8.01.02	Tightening the V-belt	8 - 2
8.01.03	Fitting the upper belt guard	8 - 2
8.01.04	Mounting the bottom V-belt guard	8 - 3
8.01.05	Fitting the synchronizer	8 - 3
8.01.06	Connecting the plug-in connections and earth cables	8 - 4
8.01.07	Fitting the reel stand	8 - 5
8.02	Commissioning	8 - 6
8.03	Switching the machine on/off	8 - 6

Contents

	Contents ..... Chapter - Page	
9	Preparation	9 - 1
9.01	Inserting the needle	9 - 1
9.02	Threading the needle thread and regulating its tension	9 - 2
9.03	Threading the looper thread and regulating its tension	9 - 3
9.04	Threading the bridle tape (on the PFAFF 3801-11/071)	9 - 4
9.05	Setting the seam depth	9 - 5
9.06	Threading the bridle tape (on thePFAFF 3801-3/07 and -3/071)	9 - 6
9.07	Selecting the program number	9 - 7
9.08	Inputting fullness	9 - 7
9.09	Entering / altering the code number	9 - 8
9.10	Entering the seam parameter	9 - 10
9.11	Adjusting the control panel	9 - 12
10	Sewing	10 - 1
10.01	Manual sewing	10 - 1
10.02	Sewing with fixed programs	10 - 3
10.03	Programmed sewing	10 - 5
10.03.01	Fullness adjustment	10 - 6
10.03.02	Selecting the garment size	10 - 7
10.03.03	Program interruption	10 - 7
10.04	Error messages	10 - 8
11	Input	11 - 11
11.01	Seam program input	11 - 2
11.01.01	Seam program input	11 - 2
11.01.02	Seam program input with the "Creating/adjusting a program" function	11 - 4
11.01.03	Seam program input with the "Teach-in" function	11 - 6
11.02	Examples of how to create seam programs	11 - 8
11.02.01	Example of a seam program input using the	11 - 8
	"Creating/adjusting a program" function	11 - 8
11.02.02	Example of a seam program input using the "teach-in" function	11 - 10
11.03	Seam program administration	11 - 13
12	Care and Maintenance	12 - 1
12.01	Cleaning	12 - 1
12.02	Machine oil level	12 - 2
12.03	Cleaning/lubricating the top feed joints	12 - 2
12.04	Checking/adjusting the air pressure	12 - 3
12.05	Cleaning the air filter of the air-filter/lubricator	12 - 3
13	Adjustment	13 - 1
13.01	Notes on adjustment	13 - 1
13.02	Tools, gauges and other accessories for adjusting	13 - 1
13.03	Abbreviations	13 - 1
13.04	Checking and adjusting aids	13 - 2

Contents ..... Chapter - Page

13.05	Adjusting the basic machine	13 - 3
13.05.01	Basic position of the machine	13 - 3
13.05.02	Position of needle to needle hole	13 - 4
13.05.03	Pre-adjusting the needle height	13 - 5
13.05.04	Neutral position of the main feed dog	13 - 6
13.05.05	Zero position of the differential feed dog	13 - 7
13.05.06	Feeding motion of main- and differential feed dogs	13 - 8
13.05.07	Lifting motion of main- and differential feed dogs	13 - 9
13.05.08	Position of main- and differential feed dogs	13 - 10
13.05.09	Zero position of feeding presser	13 - 11
13.05.10	Front driving link of feeding-presser drive	13 - 12
13.05.11	Positioning the lifting presser	13 - 13
13.05.12	Feeding motion of the top feed dog	13 - 15
13.05.13	Lift of feeding presser	13 - 16
13.05.14	Lifting stroke of feeding presser	13 - 17
13.05.15	Stitch length limitation	13 - 18
13.05.16	Basic setting of the differential adjustment device	13 - 19
13.05.17	Looper avoiding motion	13 - 20
13.05.18	Looper height and looper angle (for the 3801-3/07)	13 - 21
13.05.19	Looper height and looper angle (for the 3801-3/071 and -11/071)	13 - 22
13.05.20	Distance of the looper from the needle (in sewing direction)	13 - 23
13.05.21	Looper-to-needle clearance (crosswise to sewing direction)	13 - 24
13.05.22	Looper motion	13 - 25
13.05.23	Final adjustment of the needle height	13 - 26
13.05.24	Height of rear needle guard	13 - 27
13.05.25	Clearance between the rear needle guard and the needle	13 - 28
13.05.26	The looper-eccentric guard	13 - 29
13.05.27	Position of the front needle guard	13 - 30
13.05.28	Needle thread puller	13 - 31
13.05.29	Basic setting of the needle thread regulator and the thread guide	13 - 32
13.05.30	Looper thread regulators	13 - 33
13.05.31	Looper thread puller	13 - 34
13.05.32	Top feed and presser foot pressure	13 - 35
13.06	Adjusting the thread trimmer	13 - 36
	Only on the PFAFF 3801-3/071 and –11/071.	13 - 36
13.06.01	Preadjusting the thread catcher	13 - 36
13.06.02	Ball pin position	13 - 37
13.06.03	Thread catcher position with respect to needle	13 - 38
13.06.04	Thread catcher guard	13 - 39
13.06.05	Tension release	13 - 40
13.06.06	Trimmer test	13 - 41
13.07	Adjusting the tape feeding device	13 - 42
13.07.01	Adjusting the knife	13 - 42
13.07.02	Setting the evaluation function of the photoelectric beam	13 - 43

Contents ..... Chapter - Page

13.07.03	Adjusting the air jets	13 - 44
13.07.04	Fastening the light guides	13 - 45
13.08	Parameter settings	13 - 46
13.08.01	Overview of the parameter functions	13 - 46
13.08.02	Example of a parameter input	13 - 47
13.08.03	List of parameters	13 - 48
13.09	Sewing motor errors	13 - 50
13.10	Explanation of the error messages	13 - 51
13.11	Table of inputs	13 - 52
13.12	Table of outputs	13 - 52
13.13	Service menu	13 - 53
13.14	Carry out a cold start	13 - 54
13.15	Internet update of the machine software	13 - 55
14	Wearing parts	14 - 1
15	Circuit diagrams	15 - 1

1 Safety

1.01 Directives

This machine is constructed in accordance with the European regulations contained in the conformity and manufacturer's declarations.
In addition to this Instruction Manual, also observe all generally accepted, statutory and other regulations and legal requirements and all valid environmental protection regulations!
The regionally valid regulations of the social insurance society for occupational accidents or other supervisory organizations are to be strictly adhered to!

1.02 General notes on safety

- This machine may only be operated by adequately trained operators and only after having completely read and understood the Instruction Manual!
- All Notes on Safety and Instruction Manuals of the motor manufacturer are to be read before operating the machine!
- The danger and safety instructions on the machine itself are to be followed!
- This machine may only be used for the purpose for which it is intended and may not be operated without its safety devices. All safety regulations relevant to its operation are to be adhered to.
- When exchanging sewing tools (e.g. needle, presser foot and needle plate), when threading the machine, when leaving the machine unattended and during maintenance work, the machine is to be separated from the power supply by switching off the On/Off switch or by removing the plug from the mains!
- Everyday maintenance work is only to be carried out by appropriately trained personnel!
- Repairs and special maintenance work may only be carried out by qualified service staff or appropriately trained personnel!
- Work on electrical equipment may only be carried out by appropriately trained personnel!
- Work is not permitted on parts and equipment which are connected to the power supply! Exceptions to this are only to be found in the regulations EN 50110.
- Modifications and alterations to the machine may only be carried out under observance of all the relevant safety regulations!
- Only spare parts which have been approved by us are to be used for repairs! We expressly point out that any replacement parts or accessories which are not supplied by us have not been tested and approved by us. The installation and/or use of any such products can lead to negative changes in the structural characteristics of the machine. We shall not be liable for any damage which may be caused by non-original parts.

1.03 Safety symbols



Danger!
Points to be observed.



Danger of injury for operating and specialist personnel!



Caution

Do not operate without finger guard and safety devices. Before threading, changing bobbin and needle, cleaning etc. switch off main switch.

1.04 Important points for the user

- This Instruction Manual is a component part of the machine and must be available to the operating personnel at all times.
- The Instruction Manual must be read before operating the machine for the first time.
- The operating and specialist personnel is to be instructed as to the safety equipment of the machine and regarding safe work methods.
- It is the duty of the user to only operate the machine in perfect running order.
- It is the obligation of the user to ensure that none of the safety mechanisms are removed or deactivated.
- It is the obligation of the user to ensure that only authorized persons operate and work on the machine.

Further information can be obtained at your PFAFF agent.

1.05 Operating and specialist personnel

1.05.01 Operating personnel

Operating personnel are persons responsible for the equipping, operating and cleaning of the machine as well as taking care of faults arising in the sewing area.

The operating personnel is obliged to observe the following points and must:

- always observe the Notes on Safety in the Instruction Manual!
- never use any working methods which could limit the level of safety in using the machine!
- not wear loose-fitting clothing or jewelery such as chains or rings!
- also ensure that only authorized persons have access to the potentially dangerous area around the machine!
- always immediately report to the person responsible any changes in the machine which may limit its safety!

1.05.02 Specialist personnel

Specialist personnel are persons with a specialist education in the fields of electrics, electronics and mechanics. They are responsible for the lubrication, maintenance, repair and adjustment of the machine.

The specialist personnel is obliged to observe the following points and must:

- always observe the Notes on Safety in the Instruction Manual!
- switch off the On/Off switch before carrying out adjustments or repairs, and ensure that it cannot be switched on again unintentionally!
- never work on parts which are still connected to the power supply! Exceptions are explained in the regulations EN 50110.
- replace the protective coverings afer all repairs or maintenance work!

1.06 Danger

A working area of 1 meter is to be kept free both in front of and behind the machine while it is in operation so that it is always easily accessible.

Never reach into the sewing area while sewing!
Danger of injury by the needle!

Never leave objects on the table while adjusting the machine settings!
Objects can become trapped or be slung away!
Danger of injury!

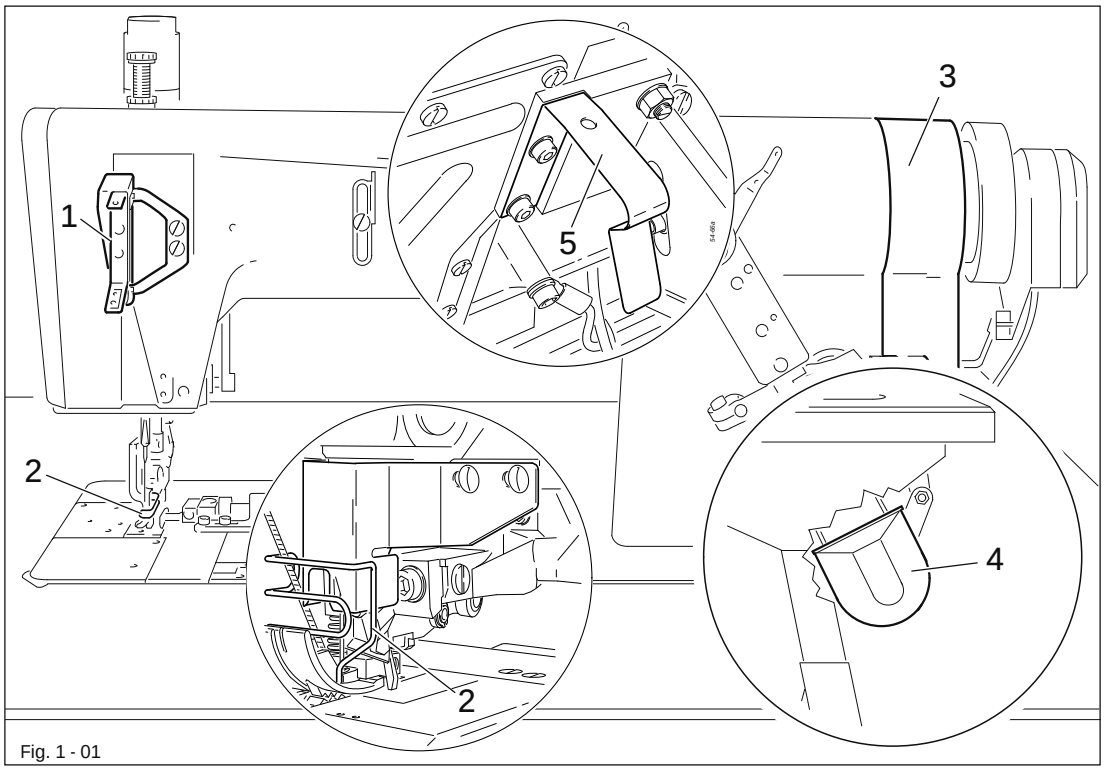

Fig. 1 - 01

Do not operate the machine without the take-up-lever guard 1!
Danger of injury due to the motion of the take-up lever!

Do not operate the machine without the finger guard 2!
Danger of injury by the needle!

Do not operate the machine without the belt guards 3 and 4!
Danger of injury due to the rotating V-belt!

Do not operate the machine without tilt lock 5!
Danger of crushing between the sewing head and table top!

Do not operate machines with a tape feeding device when this is disengaged.
Danger of injury from the knife and needle!

2 Proper use

The PFAFF 3801-3/07, the PFAFF 3801-3/071 and the PFAFF 3801-11/071 are integrated workplaces for the clothing industry for the application of fullness in one material ply.

Machinemodel	Equipment
3801-3/07	(without options)
3801-3/071	with thread-trimming unit
3801-11/071	with thread-trimming unit and tape feeding device



Any and all uses of this machine which have not been approved of by the manufacturer are considered to be inappropriate! The manufacturer cannot be held liable for any damage caused by the inappropriate use of the machine! The appropriate use of the machine includes the observance of all operational, adjustment, maintenance and repair measures required by the manufacturer!

3 Specifications▲

Stitch type: ..... 401 (two-thread chainstitch)
Max. speed:: ..... 3200 s.p.m.◆
Max. stitch length: ..... 2.0 mm
Differential stitch length: ..... 6 mm

Needle system: 4463-35
Needle size in 1/100 mm: ..... 80 – 100 depending on the material
Sewing thread: 120
Tape width (bei der PFAFF 3801-11/071): ..... 2; 2,5; 3 oder 4 mm

Eff. Balance wheel dia.: ..... 65 mm
Presser foot clearance:
3801-3/07: ..... 7 mm
3801-3/071: ..... 7 mm
3801-11/071: ..... 5 mm

Connection data:
Operating voltage: ..... 230 V ± 10%, 50/60 Hz, alternating voltage
Max. power: ..... 400 VA
Fuse protection: ..... 1 x 16 A, inert

Working air pressure: ..... 6 bar
Air consumption (on the Pfaff 3801-3/07 and the PFAFF 3801-3/071): ..... 0.3 – 0.5 l/work cycle

Noise data:
Emission sound pressure level at the workplace with
a sewing speed of 2600 spm: ..... L_{pA} < 79 dB(A) ■
(Noise measurement in accordance with DIN 45 635-48-A-1, ISO 11204, ISO 3744, ISO 4871)

Machine dimensions:
Length: ..... approx. 1250 mm
Width: ..... approx. 800 mm
Height(with reel stand): ..... approx. 1700 mm

Net weight:approx. ..... 140 kg

▲ Subject to technical alterations

◆ Depending on the material, work operation and stitch length

■ K_{pA} = 2,5 dB

4 Disposal of machines

- The proper disposal of the machines is the responsibility of the customer.
- The materials used in the machines are steel, aluminium, brass and various plastics. The electrical equipment consists of plastics and copper.
- The machine is to be disposed of in accordance with the locally valid environmental protection regulations. If necessary, a specialist is to be commissioned.



Special care is to be taken that parts soiled with lubricants are separately disposed of in accordance with the locally valid pollution control regulations!

5 Transport, packaging and storage

5.01 Transportation to customer's premises

All machines are delivered completely packed.

5.02 Transport within the customer’s premises

The manufacturer bears no liability for transport within the customer’s premises or to the individual locations of use.
Always ensure that the machine is only transported upright.

5.03 Disposal of the packaging

The packaging of these machines consists of paper, cardboard and VCE fiber. The proper disposal of the packaging is the responsibility of the customer.

5.04 Storage

The machine can be stored for up to 6 months if not in use. During this time it should be protected from dust and moisture.
For longer storage the individual parts of the machine, especially the moving parts, should be protected agains corrosion, e.g. by a film of oil.

6 Explanation of the symbols

In this Instruction Manual, tasks to be carried out and important information are drawn to your attention by symbols. The symbols have the following meanings:



Note, information



Cleaning, care



Lubrication

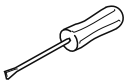

Servicing, repairing, adjustment, maintenance
(only to be carried out by specialist personnel)

7 Controls

7.01 Main switch

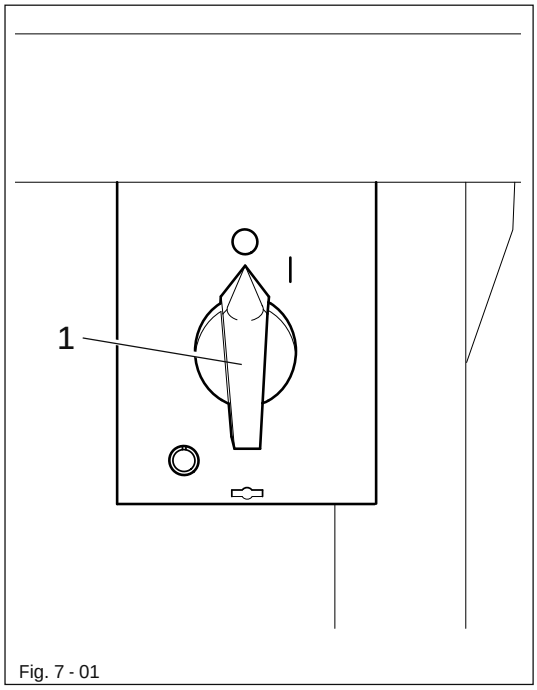

Fig. 7 - 01

- The machine is switched on or off by turning main switch 1.

7.02 Pedal

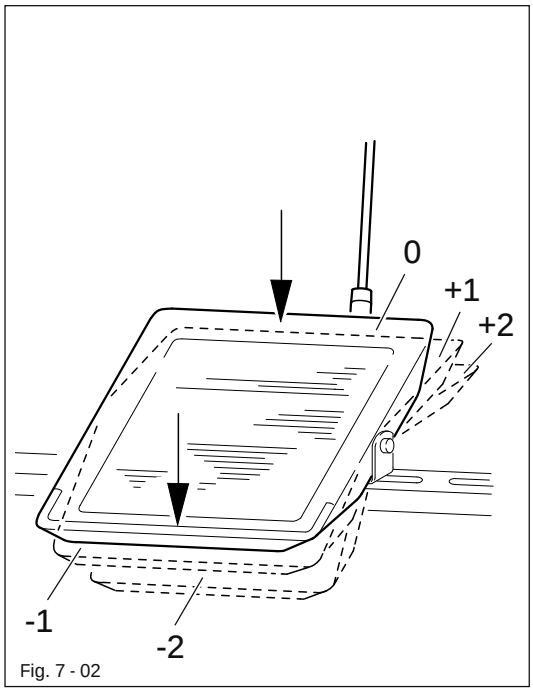

Fig. 7 - 02

0	=	Machine stop
+1	=	Presser foot down
+2	=	Sew
-1	=	Presser foot up
-2	=	Cut thread

7.03 Lever for lifting the presser foot

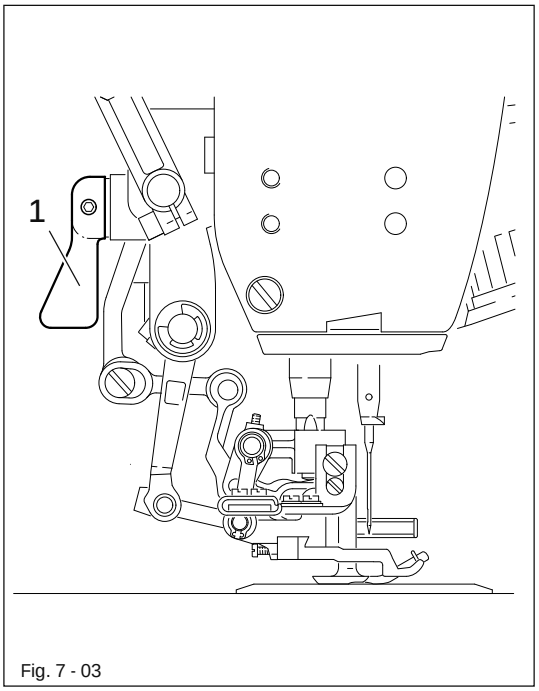

Fig. 7 - 03

- The presser foot is raised by turning lever 1.

7.04 Knee switch

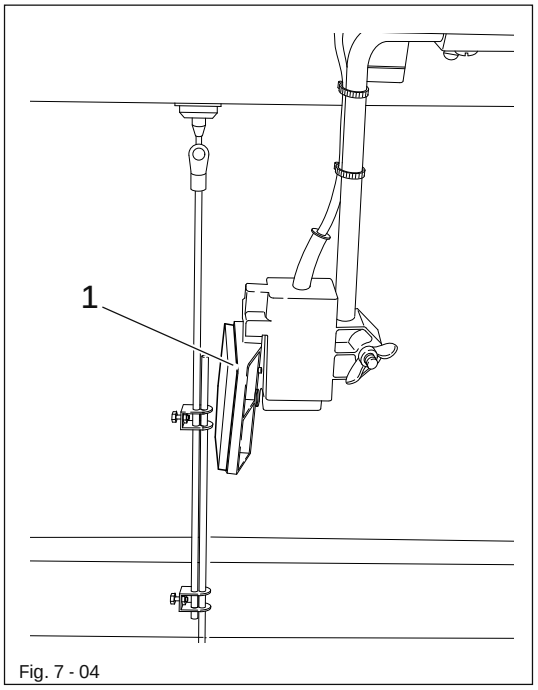

Fig. 7 - 04

- When sewing with the fixed programs (program numbers 1 and 2), it is possible to change to the next seam section by pressing knee switch 1.

This function is only available in the programmed sewing mode (program numbers 3 -49), if parameter 202 is set at "ON", see Chapter 13.08 Parameter settings).

7.05 Edge guide

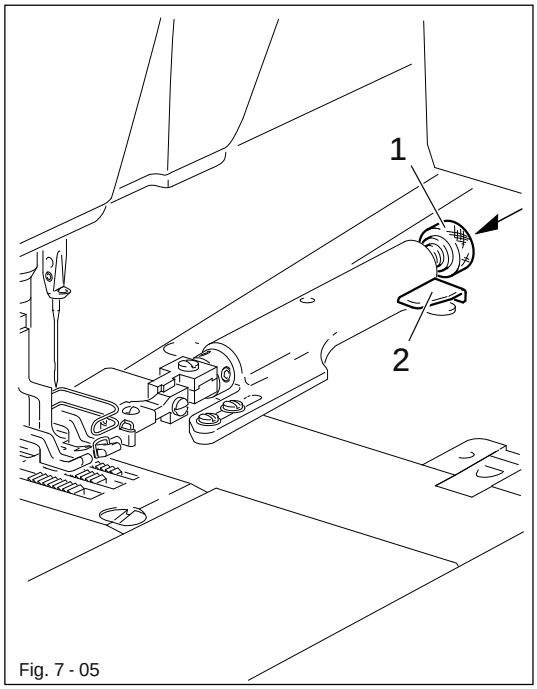

Fig. 7 - 05

- The edge guide is brought into operating position by pushing up lever 1.
- By pressing switch-key 2, the edge guide can be raised.

7.06 Lever for retracting the tape-feeding unit (only on the PFAFF 3801-11/071)

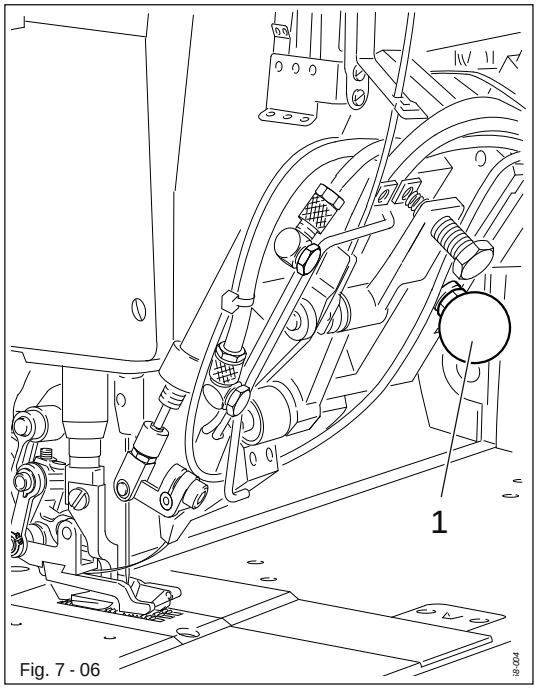

Fig. 7 - 06

- The tape-feeding unit can be retracted with lever 1.

7.07 Reverse-feed control lever

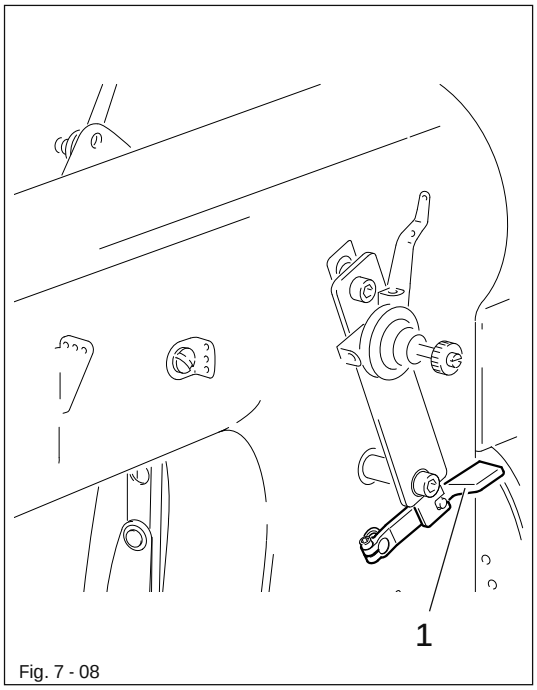

Fig. 7 - 08

- To sew condensed stitches, press lever 1 down.

7.08 Control panel

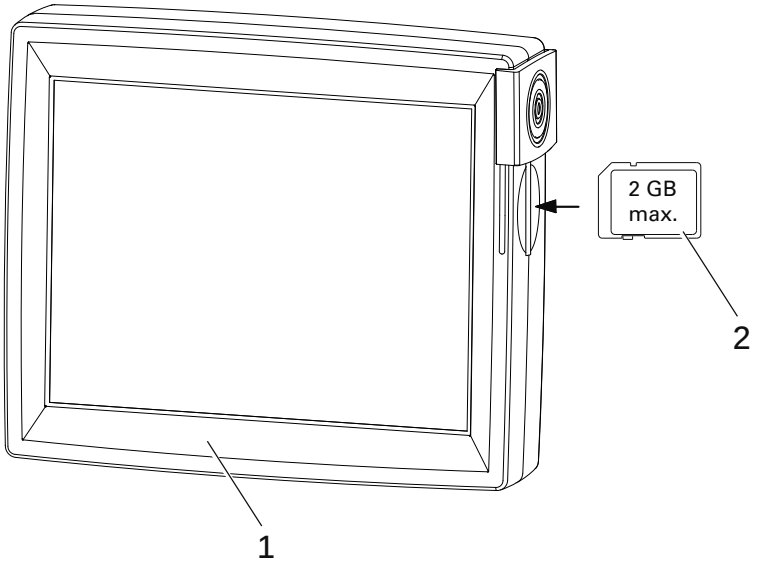

Fig. 7 - 08

The current operating conditions are displayed on control panel 1. Operation takes place in a constant dialogue between the control unit and the operator. For this purpose, depending on the operating condition of the machine, different symbols and/or texts are displayed. If the symbols or texts are framed, these show functions which can be selected by pressing the appropriate position on the monitor. By pressing the corresponding function this is carried out or switched on or off immediately, or a further menu appears, e.g. for entering a value. Activated functions are shown with inverted symbols. Unframed symbols or texts are only used for display purposes and cannot be selected by pressing.
To read sewing programs or install machine software, use the sd-card 2 in the control panel.

Description of the functions

 Normal symbol = function switched off (inactive)

 Inverted symbol = function switched on (active)

8 Mounting and commissioning the machine

The machine must only be mounted and commissioned by qualified personnel! All relevant safety regulations are to be observed!

If the machine is delivered without a table, you must make sure that the frame and the table top which you intend to use can hold the weight of the machine and the motor. It must be ensured that the supporting structure is sufficiently sturdy, including during all sewing operations.

8.01 Mounting

The necessary supply connections for the electrical and pneumatic systems must be available at the machine's location, see Chapter 3 Specifications.
There must be a stable and horizontal surface and adequate lighting at the machine's location.

The method of packaging used requires that the table top be lowered for transport. The following is a description of how to adjust the height of the table top.

8.01.01 Adjusting the table-top height

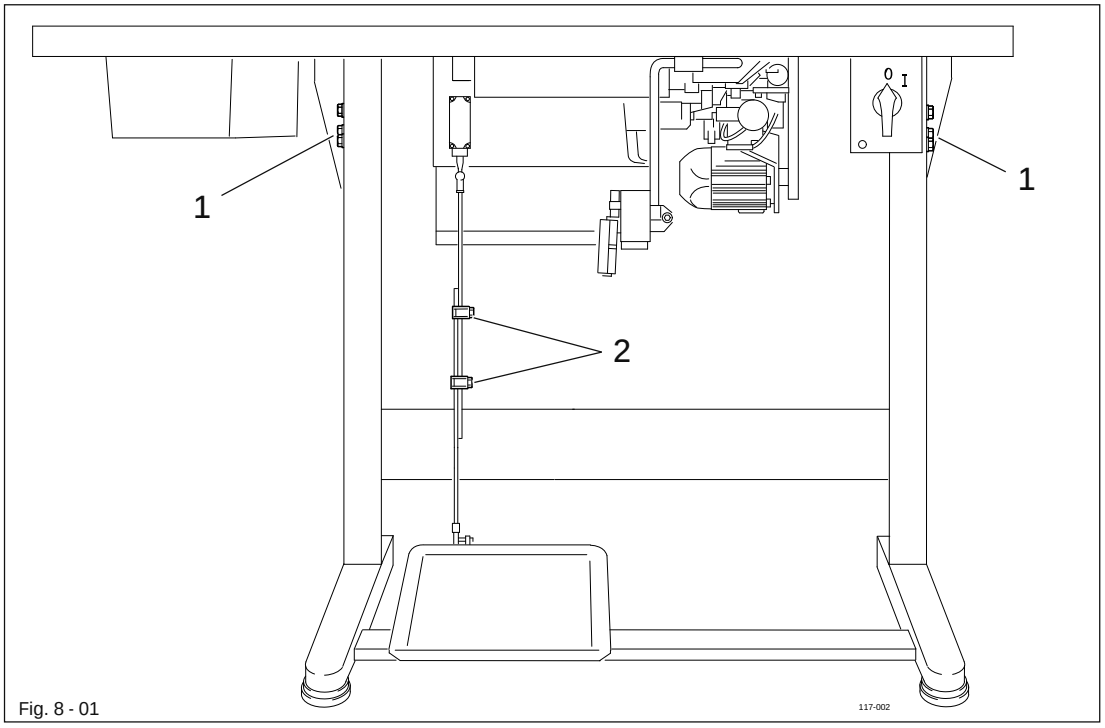

Fig. 8 - 01

- Loosen screws 1 and 2 and set the desired table-top height.
- Tighten screws 1 well.
- Adjust the position of the pedal so that you can operate it comfortably and tighten screw 2.

8.01.02 Tightening the V-belt

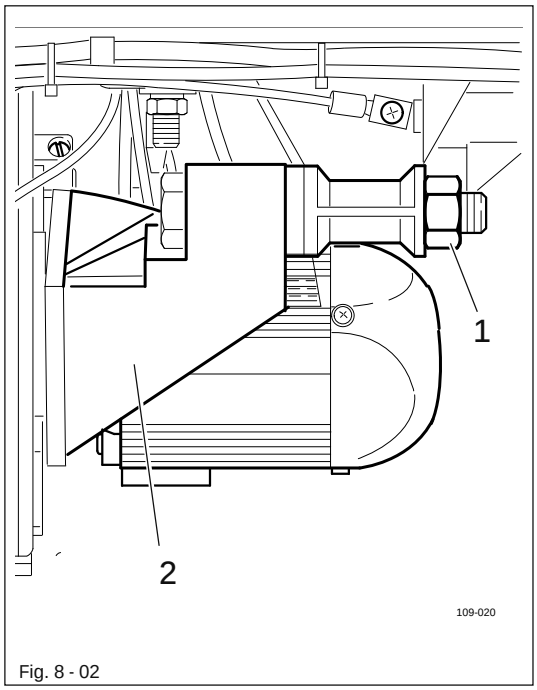

Fig. 8 - 02

- Fit the V-belt.
- Loosen nut 1 and tighten the V-belt by turning motor mounting 2.
- Tighten nut 1.

8.01.03 Fitting the upper belt guard

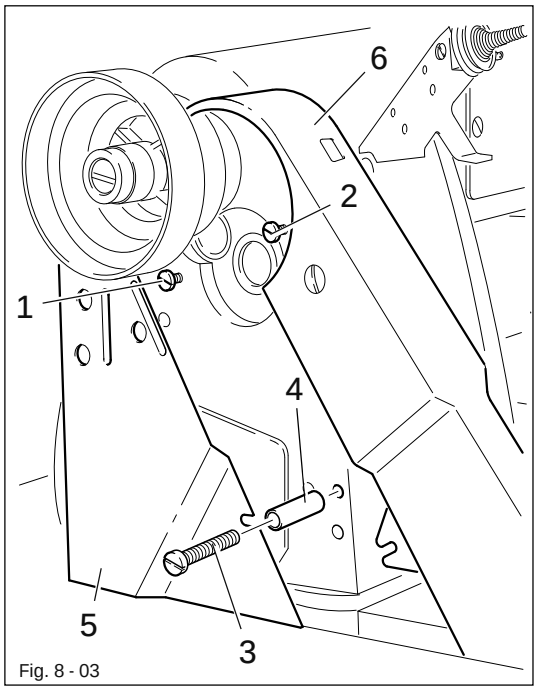

Fig. 8 - 03

- Insert screws 1 and 2.
- Insert screw 3 with spacing sleeve 4.
- Slide belt guard section 5 so that the slots are behind the heads of screws 1 and 3.
- Slightly tighten screw 1.
- Making sure that the lug of belt guard section 6 is located between belt guard section 5 and the spacing sleeve 4, align the complete belt guard and tighten screws 1, 2 and 3.

8.01.04 Mounting the bottom V-belt guard

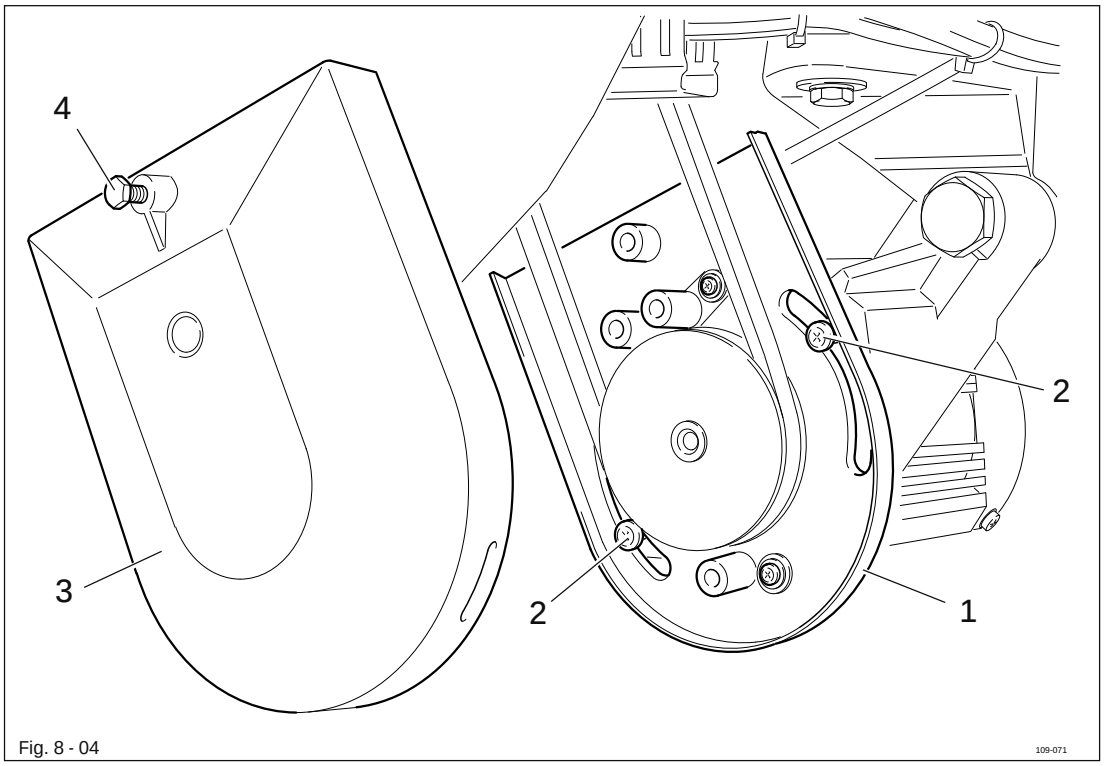

Fig. 8 - 04

- Loosen screws 2 and adjust belt guard support 1 so that the motor pulley and V-belt run freely.
- Tighten screws 2.
- Fasten belt guard 3 with screw 4.

8.01.05 Fitting the synchronizer

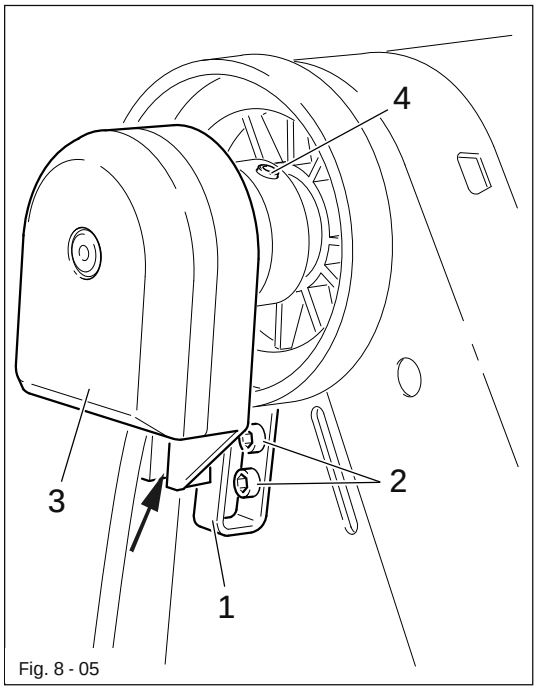

Fig. 8 - 05

- Screw on stop 1 with screws 2.
- Place synchronizer 3 on the shaft so that stop 1 is in the slot of synchronizer 3, see arrow.
- Tighten screws 4 just a little.
- Insert the plug for the synchronizer in the socket on the control box.
- Adjust synchronizer 3 (see Chapter 13.05.01, Basic position of the machine).

8.01.06 Connecting the plug-in connections and earth cables

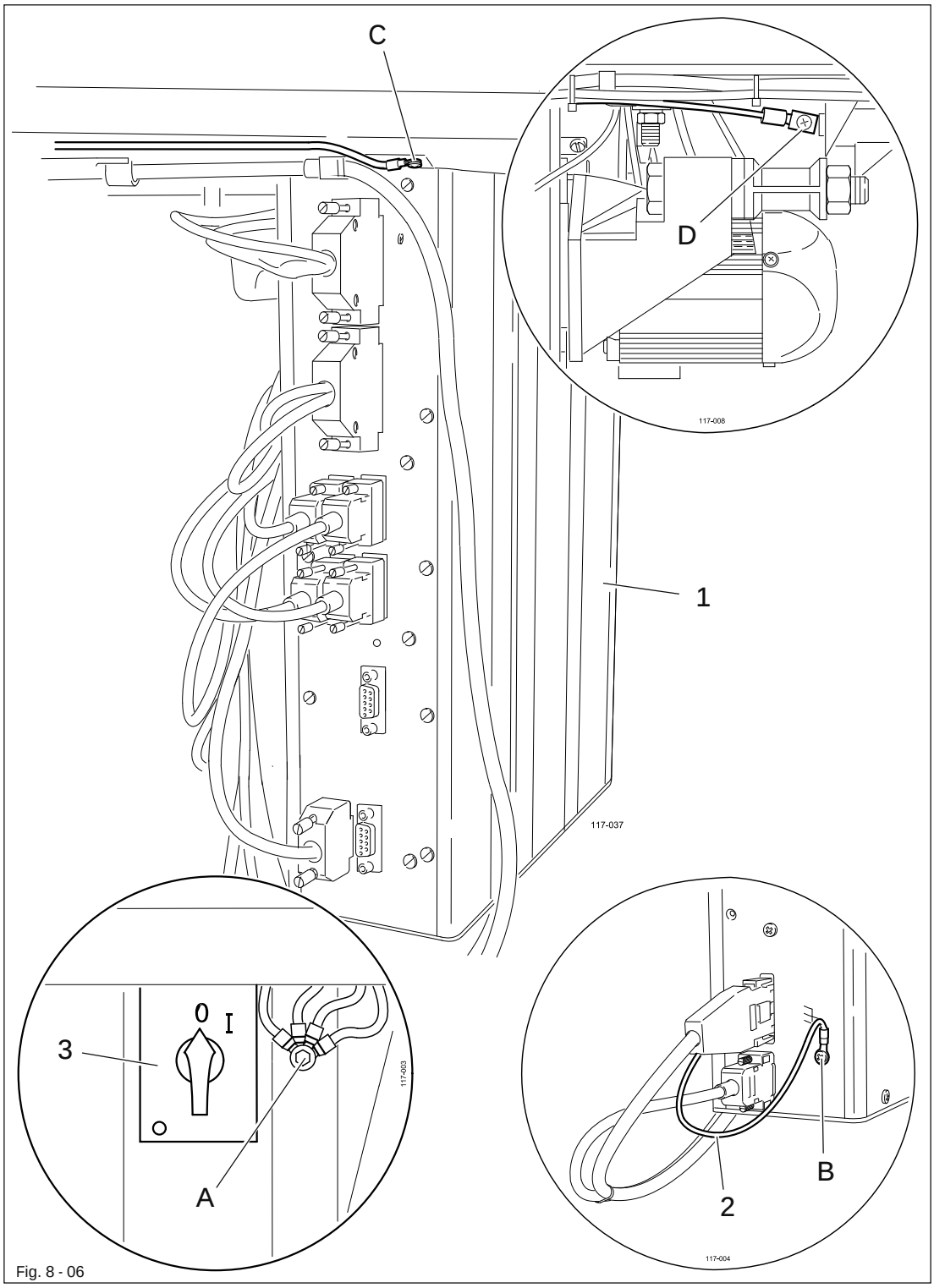

Fig. 8 - 06

- Connect all plugs as labelled in the control box 1.
- Screw the earth cable from the sewing head to earth point A.
- Connect earth point C and earth point A with an earth cable.
- Screw the earth cable from main switch 3 to earth point A.
- Screw the earth cable 2 from the motor to earth point B.

8.01.07 Fitting the reel stand

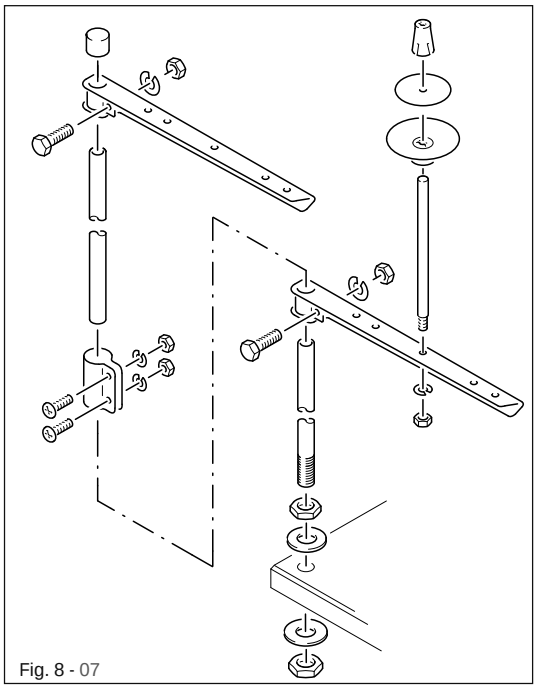

Fig. 8 - 07

- Fit the reel stand as shown in Fig. 8 - 07.
- Afterwards insert the stand in the hole in the table top and secure it with nuts provided.

8.02 Commissioning

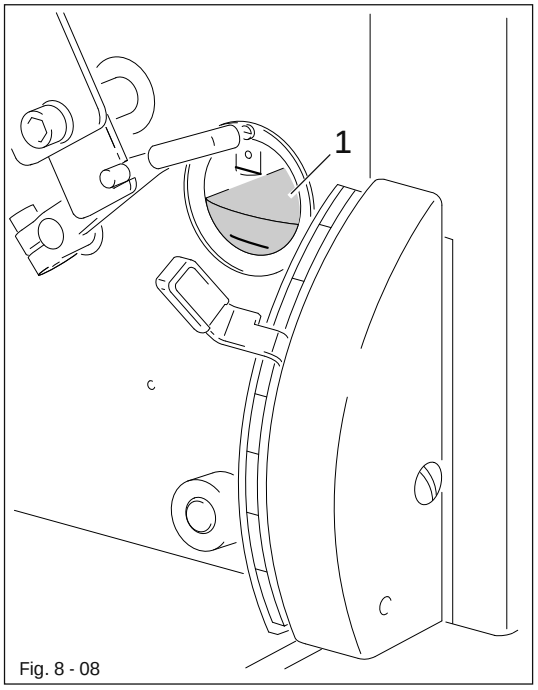

Fig. 8 - 08

Before setting up, remove the protective foil from oil glass 1!

- Clean the machine thoroughly and afterwards check the oil level (see Chapter 12, Care and Maintenance).
- Check the machine for any damage, especially the electrical leads.
- Have a qualified person check whether the motor can be driven with the existing power voltage.

If there are any differences, the machine must definitely not be operated!

The machine must only be connected to a suitably earthed socket!

- When the machine is running, the balance wheel must turn towards the operator. If this is not the case, have the motor adjusted by specialist staff, see Chapter 13.08 Parameter settings.
- Machines with pneumatic equipment have to be connected to the compressed air supply. The pressure gauge must show a pressure of 6 bar. If necessary have this reading adjusted (see Chapter 12.04, Checking/adjusting the air pressure).

8.03 Switching the machine on/off

- Switch the machine on or off, see Chapter 7.01 Main switch.
- Carry out a test run.

9 Preparation

All regulations and instructions in this Instruction Manual are to be observed! Special attention is to be paid to the safety regulations!

All preparation work is only to be carried out by appropriately trained personnel. Before all preparation work, the machine is to be separated from the electricity supply by removing the plug from the mains or switching off the On/Off switch!

9.01 Inserting the needle

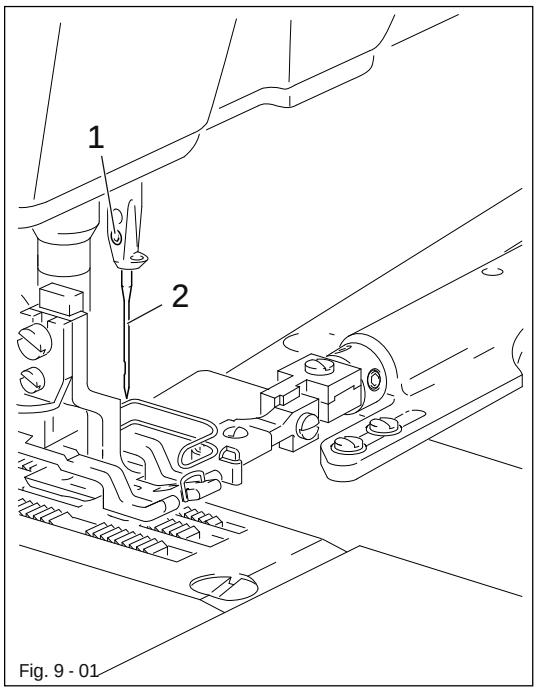

Fig. 9 - 01

Switch off the machine! Danger of injury by unintentional starting of the machine!

Only use needles from the system intended for the machine, see Chapter 3 Specifications.

- Set the needle bar at its highest point.
- Loosen screw 1.
- Push needle 2 fully into the needle bar (the long needle groove must face to the front).
- Tighten screw 1.

9.02 Threading the needle thread and regulating its tension

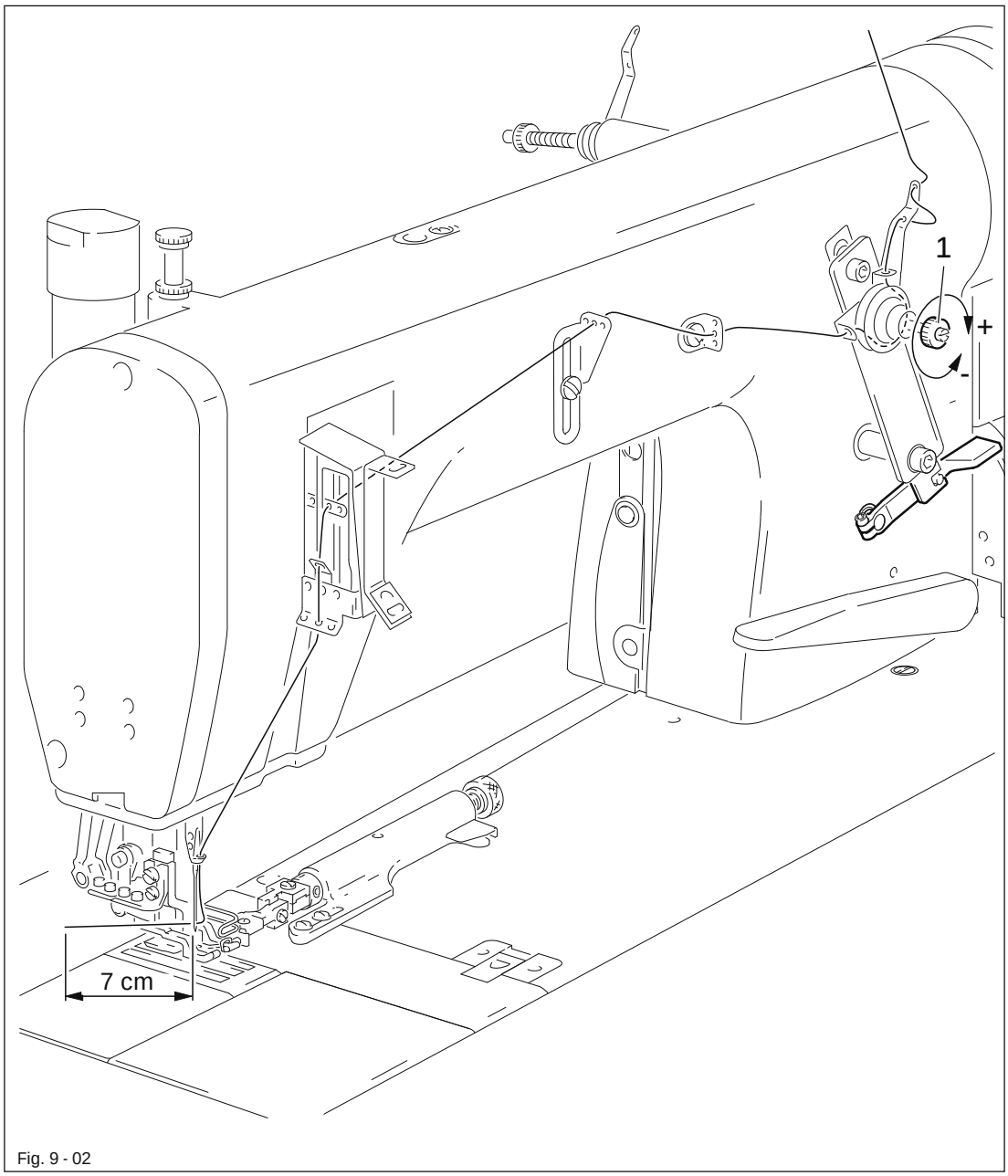

Fig. 9 - 02

Switch off the machine!
Danger of injury by unintentional starting of the machine!

- Thread the needle thread as shown in Fig. 9-02.
- Regulate the needle thread by turning knurled screw 1.

9.03 Threading the looper thread and regulating its tension

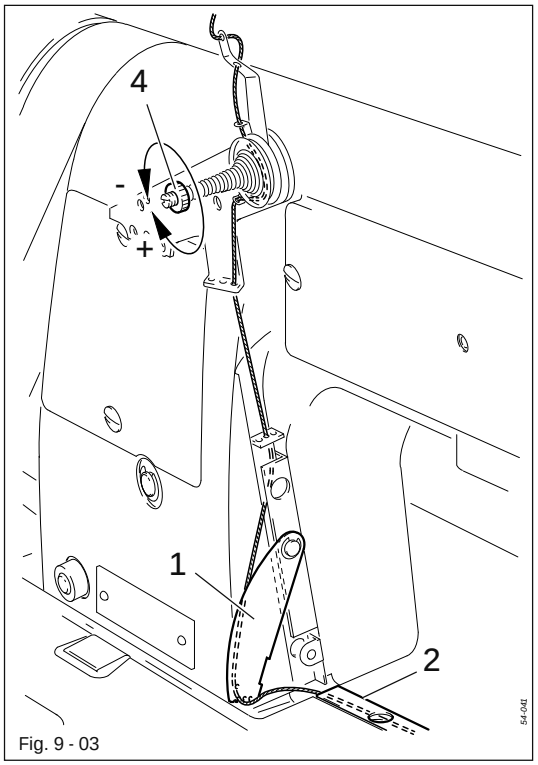

Fig. 9 - 03

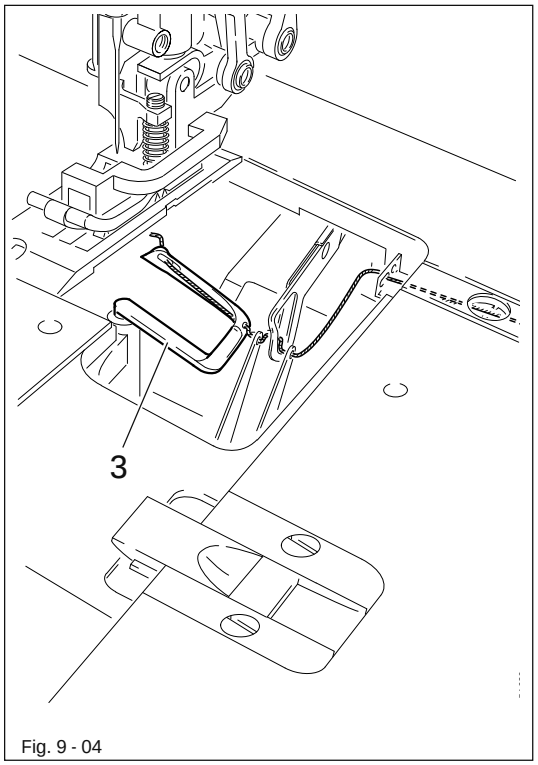

Fig. 9 - 04



Switch off the machine!
Danger of injury by unintentional starting of the machine!

- Open the looper cover and swing out thread guide plate 1.
- Thread the looper thread as shown in Figs. 9-03 and 9-04 and pull it under guide plate 2.
- Thread looper 3 using tweezers.
- Regulate the looper thread by turning knurled screw 4.

9.04 Threading the bridle tape (on the PFAFF 3801-11/071)

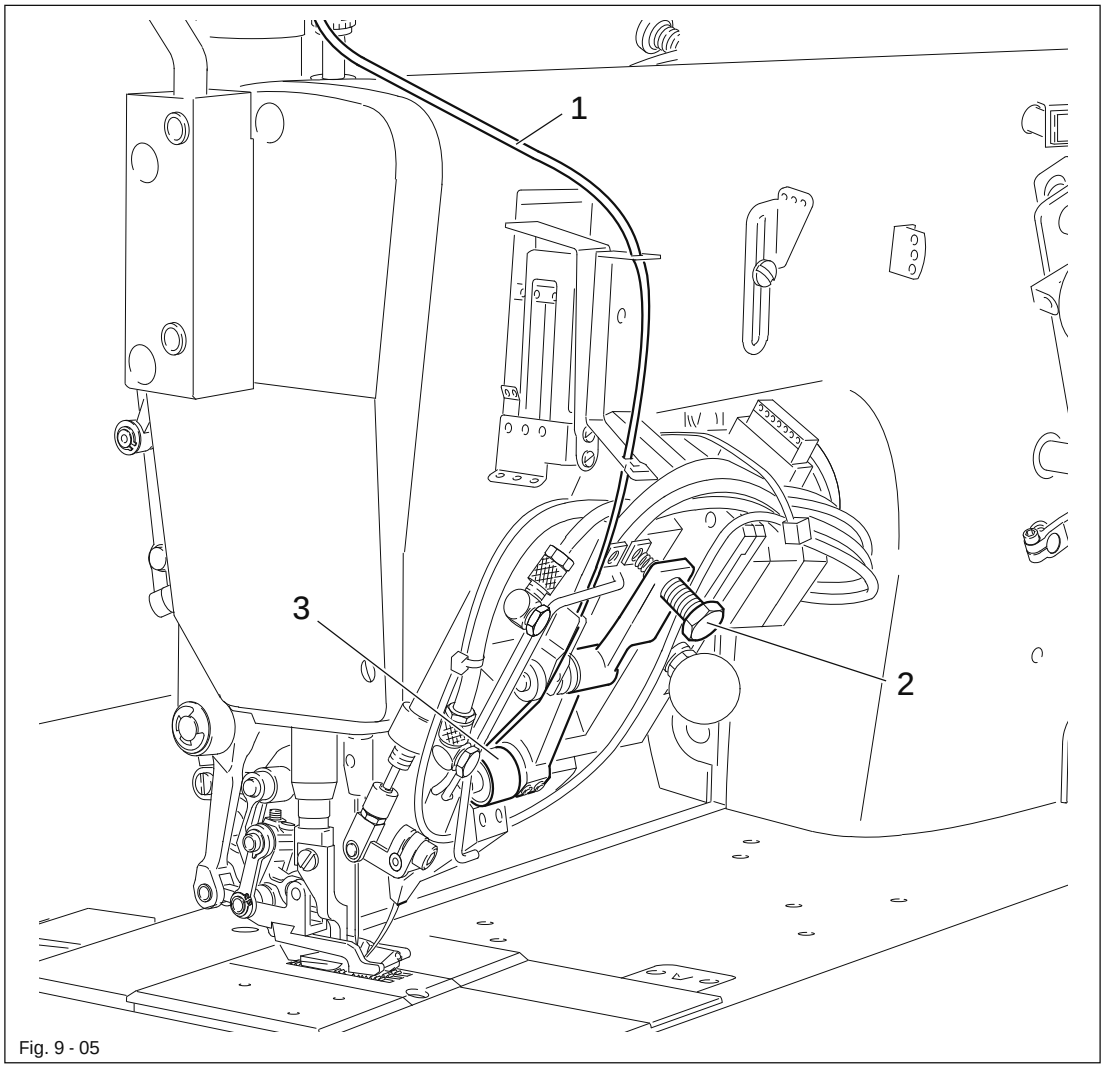

Fig. 9 - 05



Switch off the machine!
Danger of injury by unintentional starting of the machine!

- Thread the bridle tape 1 as shown in the above illustration.
- Operate lever 2 and guide the bridle tape 1 between the feed rollers 3.
- Switch on the machine.



- Press the "thread the tape" function.





To be able to work with bridle tape, the "tape feed" function (inverse symbol) must be switched on.

9.05 Setting the seam depth

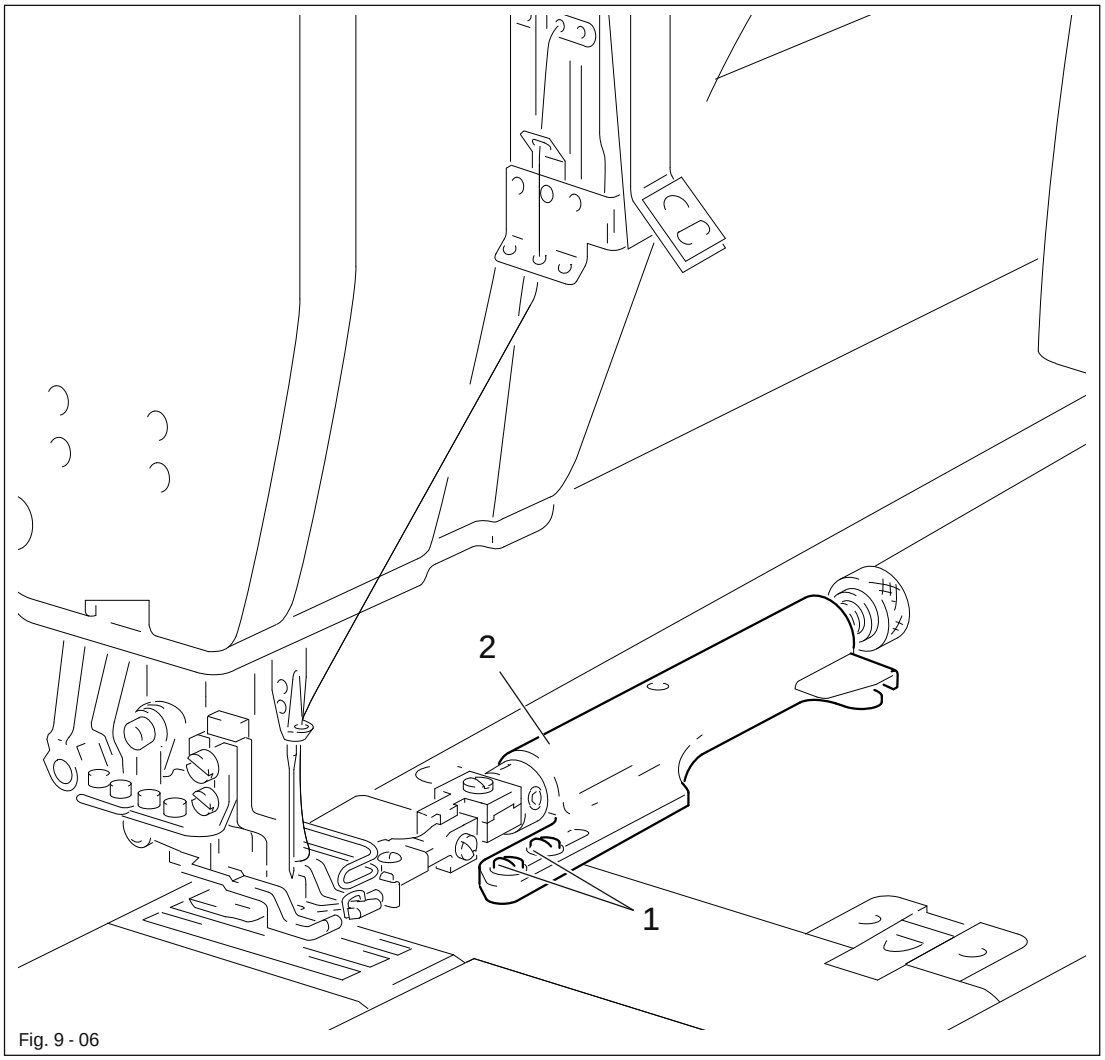

Fig. 9 - 06



Switch off the machine!
Danger of injury by unintentional starting of the machine!

- Switch on the edge guide, see Chapter 7.05 Edge guide.
- Loosen screws 1.
- Adjust edge guide 2 according to the seam depth required and tighten screws 1.

9.06 Threading the bridle tape (on thePFAFF 3801-3/07 and -3/071)

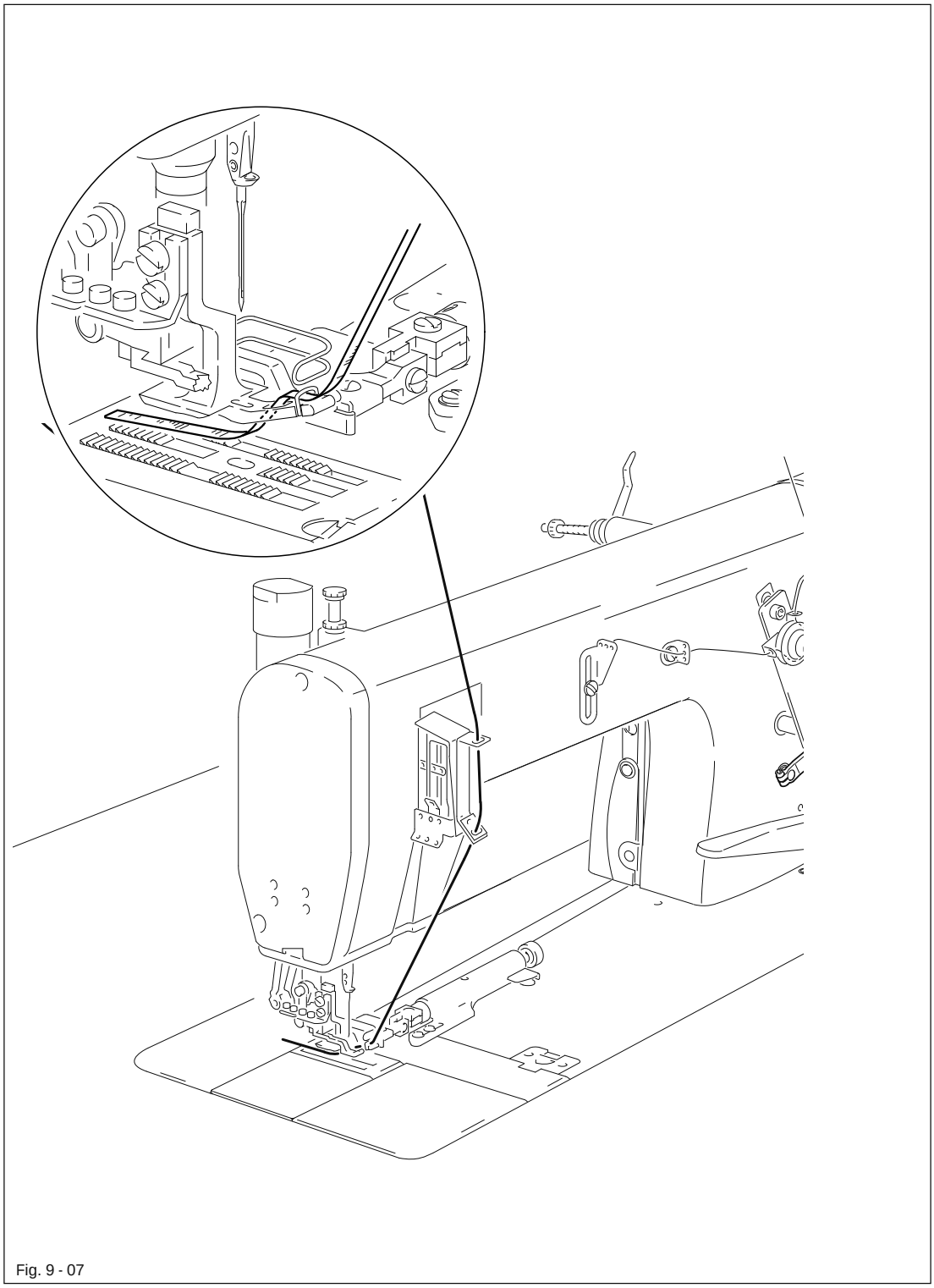

Fig. 9 - 07

Switch off the machine!
Danger of injury by unintentional starting of the machine!

- Thread the bridle tape as shown in the above illustration.

9.07 Selecting the program number

- Switch on the machine.



- Call up the program number input menu.

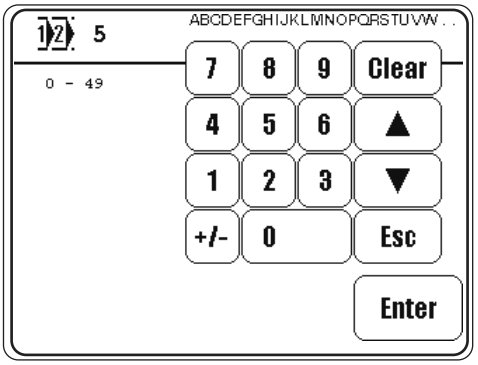

- Select the desired program number.



- Confirm the selection and quit the selection menu.



The type of sewing is stipulated with the selection of the program number, see Chapter 10 Sewing.

Program number 0:	Manual sewing
Program number 1 and 2:	Sewing with fixed programs
Program number 3 to 49:	Programmed sewing

9.08 Inputting fullness

- Switch on the machine.



- Call up the program number input menu.

- Select program number "0".



- Confirm the selection and quit the selection menu.

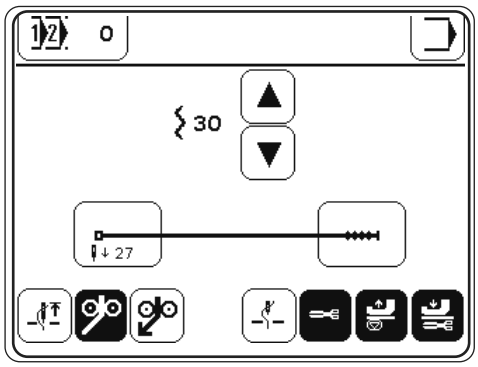

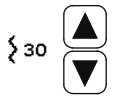

- Enter the desired value with the appropriate arrow keys.

9.09 Entering / altering the code number

- Switch on the machine.

- Call up the input mode.

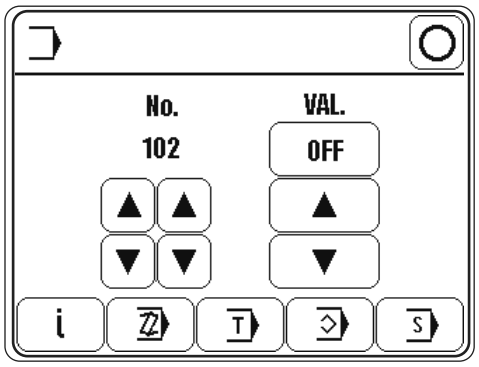

- Select parameter "800".

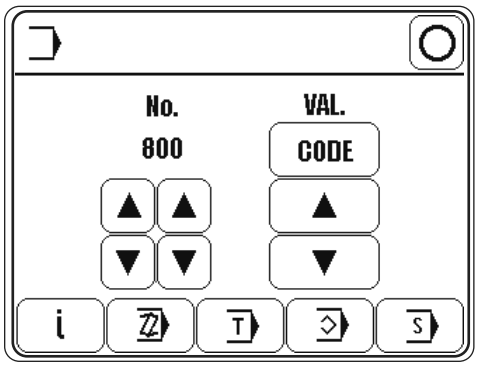

CODE

- Select the code number input menu.
- Enter the code number on the number keys (factory code setting is "3800").

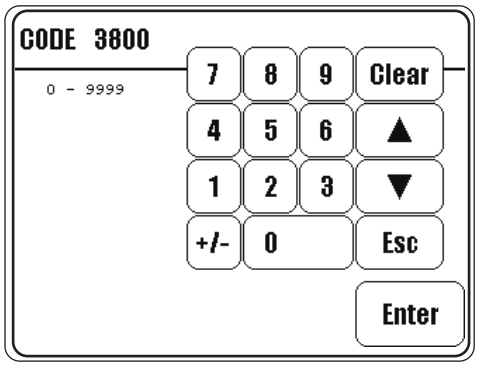

Enter

- Take over the code number entered.

The code input remains stored until the machine is switched off at the main switch. As long as the machine is not switched off, all parameters are freely accessible without having to enter the code number again.



- Select parameter "810"

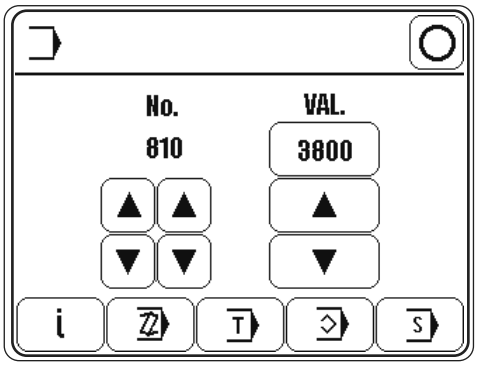

3800

- Call up the code number input menu and enter the desired code number.

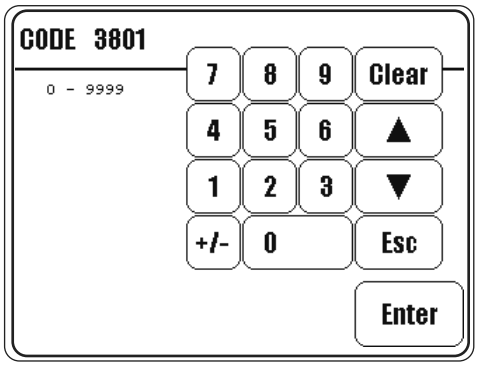

Enter

- Take over the new code number.



- Conclude input.



Do not forget the code!
Without the appropriate code, the protected functions cannot be called up!
Help is then only possible through PFAFF service staff.

9.10 Entering the seam parameter

- Switch on the machine.



- Select the menu for the program number input.

- Select program number "0"-



- Confirm the selection and quit the selection menu.

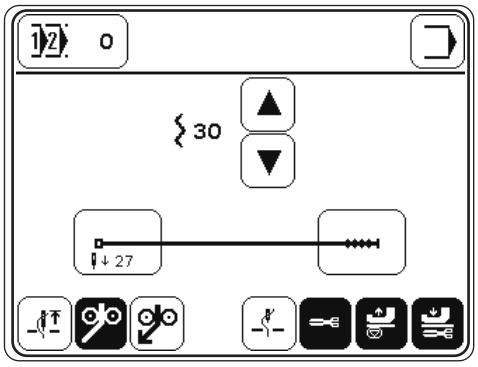



- Call up the "seam end" function.

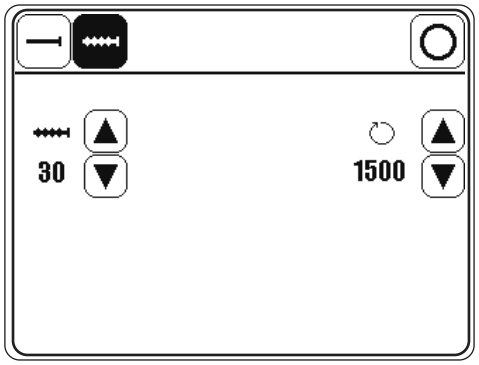



- Select the number of stitches for the seam protrusion.



- Conclude the input.



- Call up the input mode.



- Select parameter "204".

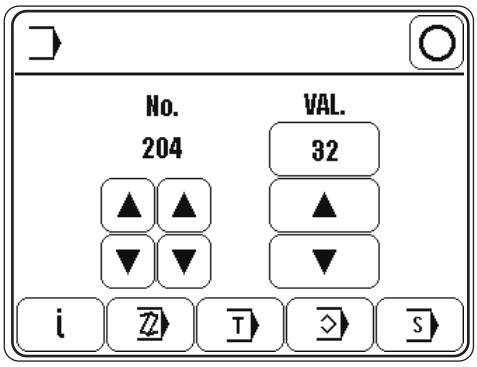

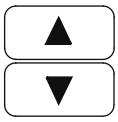

- Enter the desired length of the tape section.



- Conclude the input.

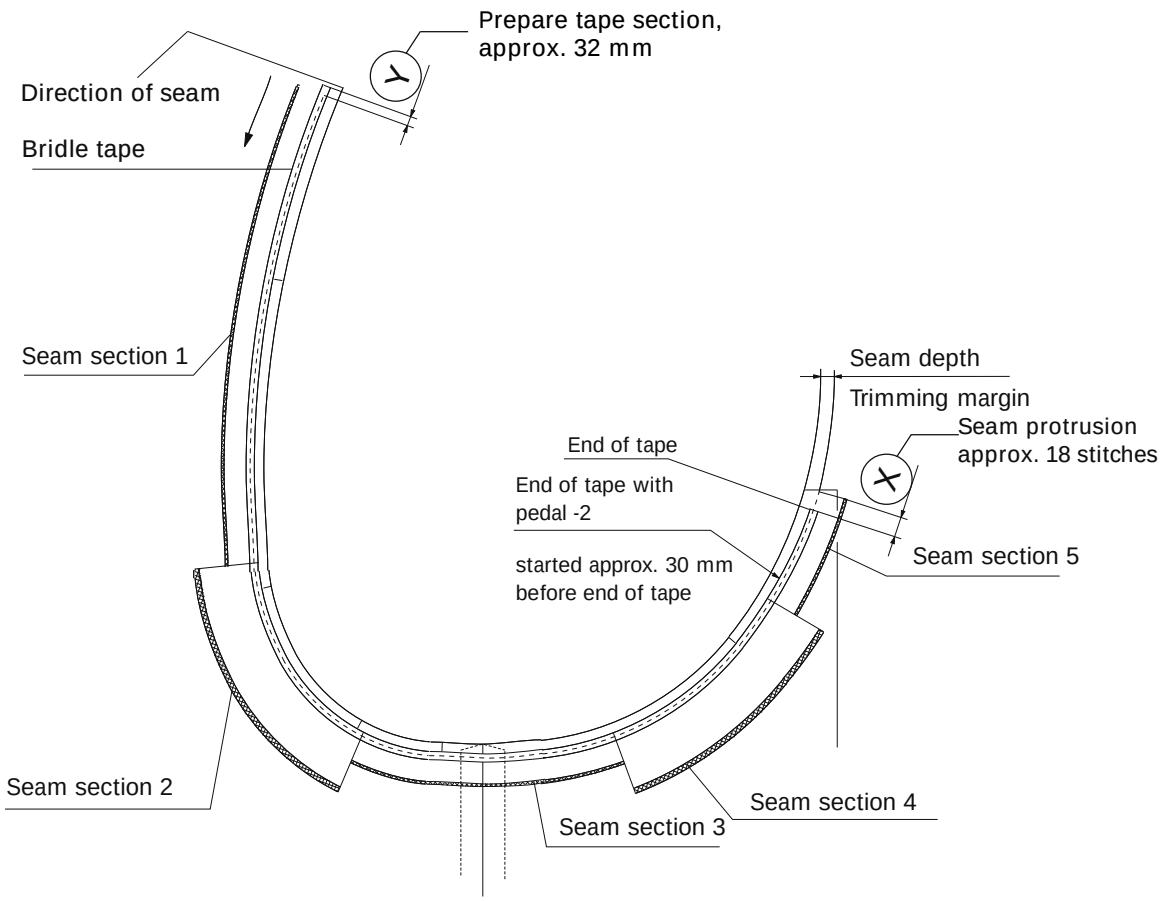

9.11 Adjusting the control panel

- Switch on the machine.

- Call up the input mode.

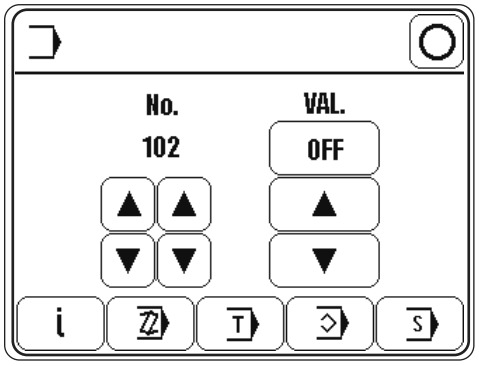

- Select the service menu.

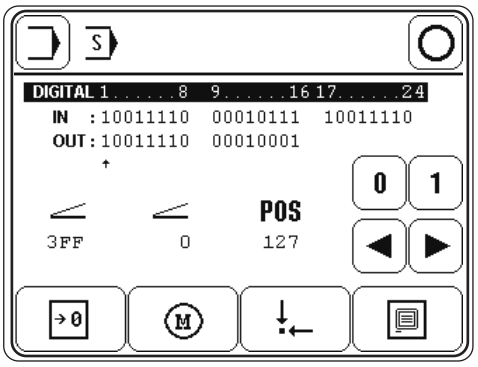

- Select control panel functions.

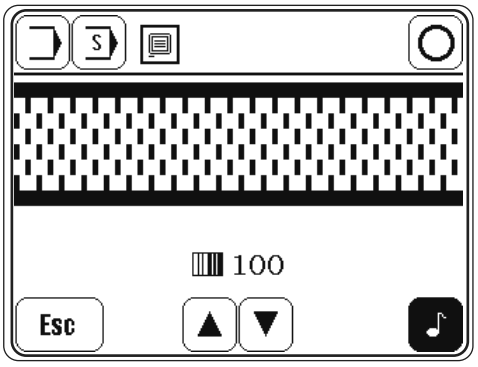

- Change the display contrast.

- Switch the key tone off or on.

Never reduce the display contrast to the extent, that the display can no longer be read!

10 Sewing

In the sewing mode all relevant settings for the sewing operation are displayed on the screen and can be altered with the corresponding functions.
In the sewing mode a difference is made between manual sewing, sewing with fixed programs and programmed sewing.
The selection is made with the corresponding program number:

0:	Manual sewing
1 and 2:	Sewing with fixed programs
3 to 49:	Programmed sewing (with up to 15 seam sections for both the left and right seam)

10.01 Manual sewing

In the manual sewing mode the values for fullness and the stitch placement position are shown on the display when sewing starts, and like the needle and sewing foot positions, can be changed directly with the appropriate function. On machines with the tape feed device (3801-11/071) the function can also be changed at the end of the seam.



- Switch on the machine and select program number "0", see Chapter 9.07 Selecting the program number.

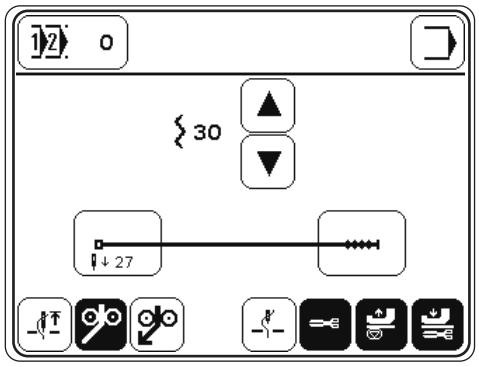

Explanation of the functions



Program selection
This opens the menu for entering the program number, see Chapter 9.07 Selecting the program number.



Input mode
Exit the sewing mode and select the input mode.



Fullness
Alters the value for fullness, see Chapter 9.08 Inputting fullness



Seam start (placement stitch)
Opens the menu for entering the placement stitch value.



Seam end (only on machines with tape feed device - 3801-11/071)
Opens the menu for entering the seam parameters at the end of the seam (pedal position "-2"), see Chapter 9.10 Entering the seam parameters



Needle raised
Moves the needle to its highest position



Tape feed (only on machines with tape feed device - 3801-11/071)
Switches the tape feed device on or off.



Feed tape (only on machines with tape feed device - 3801-11/071)
When the tape feed device is switched on, this function feeds the tape (threading aid), see Chapter 9.04 Threading the bridle tape.



Needle position raised
When this function is activated, the needle moves to its highest position after sewing stops.



Thread trimming
When activated, this function enables thread trimming with the pedal function.



Sewing foot raised
When this function is activated, the sewing foot is raised after sewing stops.



Sewing foot lowered after thread trimming
When this function is activated, the sewing foot is not raised after thread trimming.

- Sewing is carried out with the pedal functions, see Chapter 7.02 Pedal.

10.02 Sewing with fixed programs

Fixed programs are stored under the program numbers **1** and **2**.
The fixed programs are used for the quick and easy production of seams with different amounts of fullness. When sewing with fixed programs, 2 or 3 seam sections are sewn after each other. With the knee switch it is possible to move to the next section. The fixed programs are designed as cyclic running programs, i.e. at the end of the last seam section, the machine moves back to the first seam section. The fullness value can be set for each seam section, the settings for the stitch placement position and for the needle and sewing foot positions apply to all sections and can be changed at any time with the corresponding function..

- Switch on the machine and select program number "1" or "2", see Chapter 9.07 Selecting the program number.

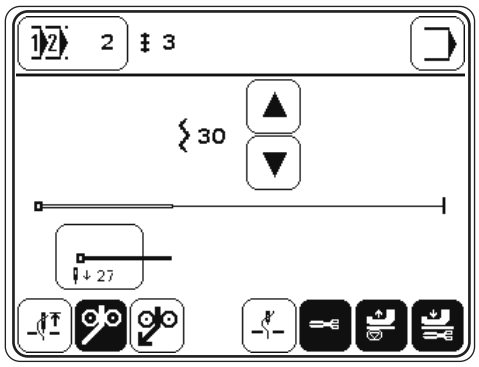

Explanation of the displays and functions

Program selection
This opens the menu for entering the program number, see Chapter 9.07 Selecting the program number.

3 Seam section
Shows the number of seam sections in the sewing program.

Input mode
Exit the sewing mode and select the input mode.

30 Fullness
Alters the fullness value, see Chapter 9.08 Inputting fullness.

Seam start (placement stitch)
Opens the menu for entering the placement stitch value.

Seam end (only on machines with tape feed device - 3801-11/071)
Opens the menu for entering the seam parameters at the end of the seam (pedal position "-2"), see Chapter 9.10 Entering the seam parameters.



Needle raised
Moves the needle to its highest position



Tape feed (only on machines with tape feed device - 3801-11/071)
Switches the tape feed device on or off.



Feed tape (only on machines with tape feed device - 3801-11/071)
When the tape feed device is switched on, this function feeds the tape (threading aid), see Chapter 9.04 Threading the bridle tape.



Needle position raised
When this function is activated, the needle moves to its highest position after sewing stops.



Thread trimming
When activated, this function enables thread trimming with the pedal function.



Sewing foot raised
When this function is activated, the sewing foot is raised after sewing stops.



Sewing foot lowered after thread trimming
When this function is activated, the sewing foot is not raised after thread trimming.

- Sewing is carried out with the pedal and knee switch functions, see Chapter 7.02 Pedal or 7.04 Knee switch.

10.03 Programmed sewing

With the program numbers 3 – 49 it is possible to call up previously programmed seams. In programmed sewing all seam sections for pre-gathering a sleeve are set in one seam program. The information about the seam program, such as program number, number of programmed seam sections, programmed comments and garment size is displayed.
For better orientation a seam sketch is shown with the programmed seam sections. The seam start, seam end, the seam sections already sewn, the current seam section and the seam sections still to be sewn are illustrated by symbols and different types of lines with different thicknesses. For the current seam section the corresponding parameters for seam section number, fullness with fullness adjustment and the number of stitches (length of seam section) are displayed. The fullness adjustment value can be altered directly.



- Switch on the machine, select the desired program number from "3" to "49", see Chapter 9.07 Selecting the program number.

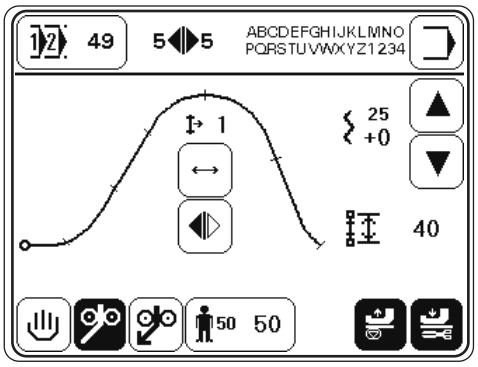

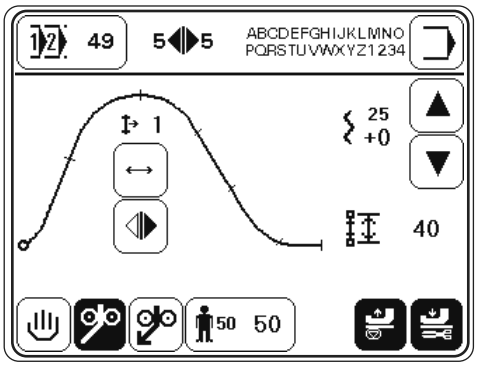

Explanation of the displays and functions



Program selection
This opens the menu for entering the program number, see Chapter 9.07 Selecting the program number.

5 5 Seam section right/left
Shows the number of seam sections in the seam program for the right/left sleeve seam.



Input mode
Exit the sewing mode and select the input mode.

1 Current seam section
Shows the current seam section.



Automatic seam change
When this function is activated, the machine changes automatically from the right to left sleeve seam.



Current seam
This function is used to select and display the current sleeve seam (right/left).

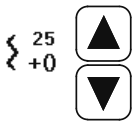

Fullness adjustment
Displays and adjusts the programmed fullness, see Chapter 10.03.01 Adjusting the fullness.



Program interruption
Interrupts the program sequence, see Chapter 10.03.03 Program interruption

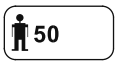

Basic size / garment size
Displays the basic size and opens a menu for selecting the garment size, see Chapter 10.03.02 Selecting the garment size.



Sewing foot raised
When this function is activated, the sewing foot is raised after sewing stops.



Sewing foot lowered after thread trimming
When this function is activated, the sewing foot is not raised after thread trimming.

- Sewing is carried out with the pedal and knee switch functions, see Chapter 7.02 Pedal.



If the knee switch is used to switch between the seam sections, parameter "202" must be set at "ON". With this parameter setting it is only possible to change seam sections with the knee switch.

10.03.01 Fullness adjustment

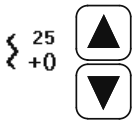

In programmed sewing the programmed fullness can be corrected directly without changing the seam program. It is only possible to enter a fullness adjustment if an amount of fullness is programmed in at least one seam section. The fullness adjustment can have an effect on the complete seam program or merely on the current seam section.

- If the fullness adjustment in the first seam section is entered before sewing begins, then the fullness adjustment applies to the complete seam program (only seam sections with programmed fullness) and is maintained.
  (Fullness small, adjustment value large)

- If the fullness is adjusted after sewing begins, the adjustment only has effect on the current seam section.
  (Fullness large, adjustment value small)

10.03.02 Selecting the garment size

Based on the programmed basic size, in programmed sewing it is possible to select a garment size. The seam sections, which were given a graduated value during programming, are converted to the new size.

50

- Call up the menu for selecting the garment size.

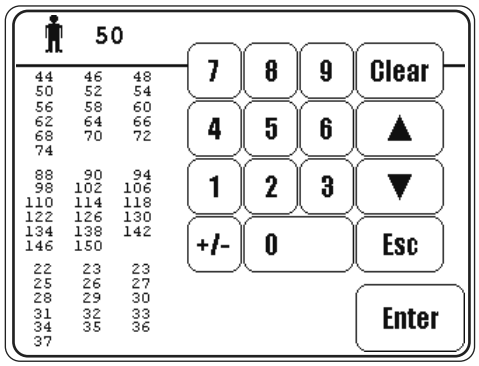

- Select the desired garment size.

Enter

- Confirm selection and exit selection menu.

10.03.03 Program interruption

With the "program interruption" function the programmed seam sequence is interrupted (e.g. if the thread breaks).

- Interrupt program sequence.

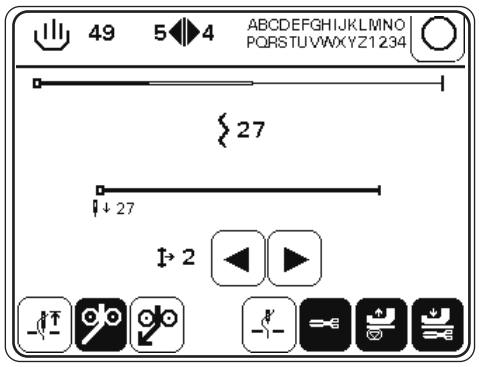

2 ▲ ▼

- If necessary, tact forwards or backwards through the sections of the seam program.
- If necessary, change the values and carry out the other functions as in manual sewing, see Chapter 10.01 Manual sewing.

- If necessary, call up programmed sewing again..

10.04 Error messages

If an error occurs, the text "ERROR" appears on the display, together with an error code. An error message is caused by incorrect settings, defective elements or seam programs and by overload conditions.

For an explanation of the error codes see Chapter 13.10 Explanation of the error messages.

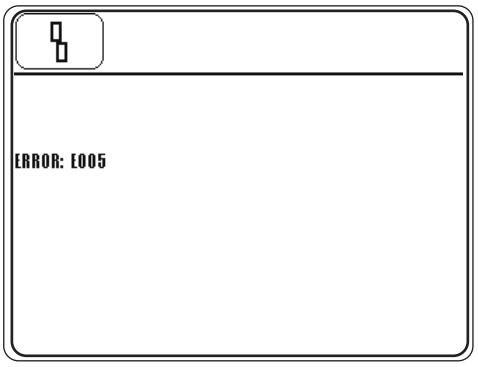

- Eliminate the error.



- Confirm error elimination.

11 Input

In the input mode the functions parameter input, information, creating/adjusting a sewing program, teach-in, program administration and service are available.

- Switch on the machine.



- Call up the input mode.

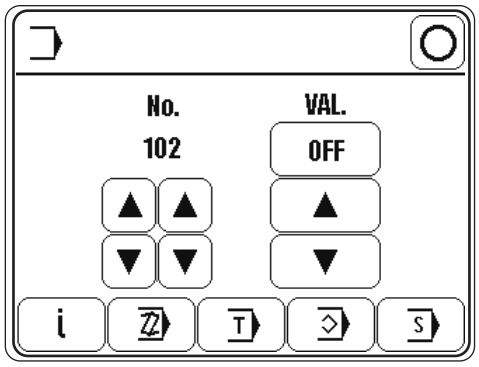

Explanation of the functions



Sewing mode
Quit the input mode and call up the sewing mode.



Parameter selection
Select the hundred and unit figures of the desired parameters, see Chapter 13.08.02 Example of a parameter input.

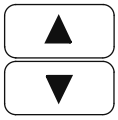

Altering the parameter value
Change the value of the selected parameter, see Chapter 13.08.02 Example of a parameter input.



Software information
Calls up information about the current machine software.



Creating/adjusting a program
Opens the menu for entering or altering a seam program, see Chapter 11.01.02 Seam program input with the "Creating/adjusting a program" function.



Teach In
Opens the menu for entering seam programs after sewing a sample, see Chapter 11.01.03 Seam program input with the "Teach in" function.



Program administration
Opens the menu for seam program administration, see Chapter 11.03 Seam program administration.



Service
Opens the service menu, see Chapter 13.13 Service menu.

11.01 Seam program input

Seam programs can be created by entering parameters in the "Creating/adjusting a seam program" function, or by sewing a sample with the "Teach in" function.
Irrespective of which function is being used, first of all it is necessary to select the program number and the basic settings of the seam program, which is to be sewn.

11.01.01 Basic settings for seam program input

In the "Creating/adjusting a program" and "Teach-in" functions the basic settings are the same and consist of basic size and seam type.

- Switch on the machine.
- Select a number from 3 – 49, see Chapter 9.07 Selecting a program number.



- Call up the input mode.



- Call up the "Creating/adjusting a seam program" or the "Teach in" function.

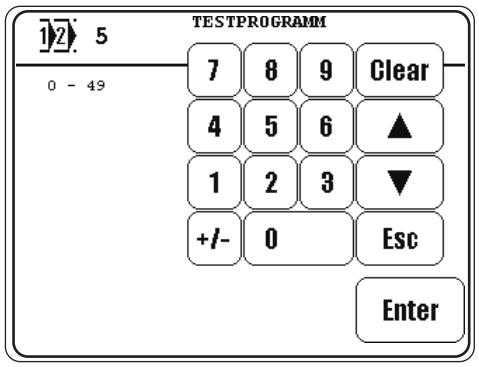

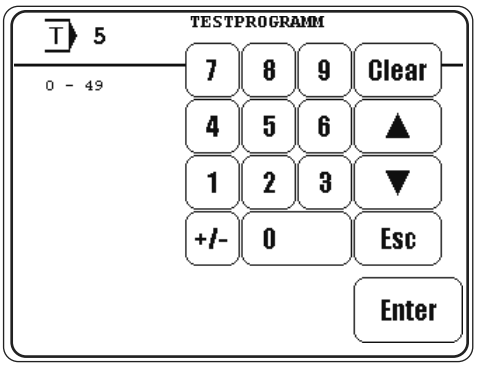



- If necessary, change the selected program number and confirm the selection.

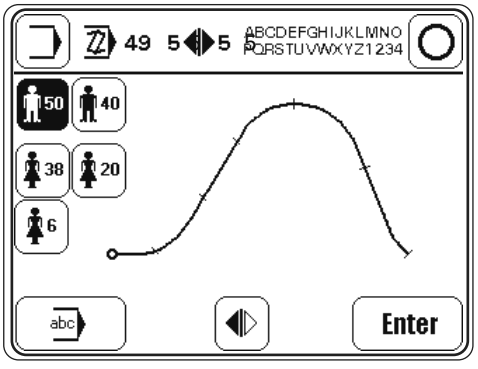

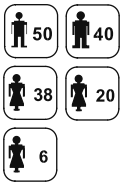

- Choose a basic size.



- If applicable, enter or change a comment.



- Set the seam type (by pressing the appropriate symbol several times until the appropriate seam type is displayed).
  Description of the symbols:



Sewing program with left and right seam, beginning with the right seam.



Sewing program with left seam only.



Sewing program with right seam only.



Sewing program with left and right seam, beginning with the left seam.



- Conclude the input of the basic settings and change to the seam section input, see Chapter 11.01.02 Seam program input with the "Creating/adjusting a program" function or Chapter 11.01.03 Seam program input with the "Teach in" function.





The input can also be concluded by calling up the sewing mode. In this case the seam program input is concluded and the machine changes to programmed sewing.

11.01.02 Seam program input with the "Creating/adjusting a program" function

With this function the seam program is entered by entering or changing the appropriate values on the control panel. This type of seam program input is particularly suitable for adjusting existing seam programs.

- Switch on the machine.
- Select a program number from 3 – 49, see Chapter 9.07 Selecting a program number.



- Call up the input mode.



- Call up the "Creating/adjusting a seam program" function.



- Carry out the basic settings and conclude with the "Enter" function, see Chapter 11.01.01 Basic setting for seam program input.

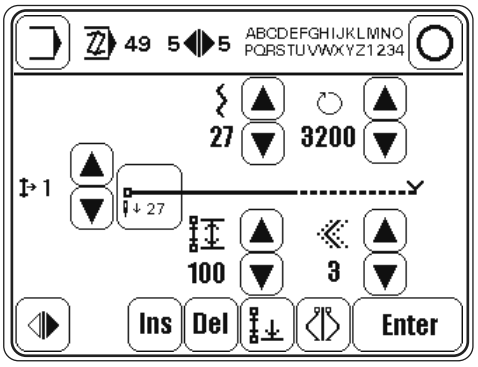

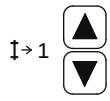

- These functions are used to scroll through the current seam program.
  The current seam section is displayed accordingly, in addition to all the other current values.

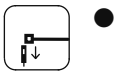

- This function is used to call up the menu for entering the placement stitch at the beginning of the seam.



- Adjust the fullness, see Chapter 9.08 Inputting fullness.



- Change maximum speed for the current seam section.



- Change the number of stitches for the seam section.
  The length of the seam section results from the number of stitches and the fullness value. After sewing the number of stitches entered, in programmed sewing the machine switches to the next seam section.



- Change the graduated value.
  The graduated value is used to adapt different garment sizes to the programmed basic size.



- Select a seam type.
  It is only possible to select the right or left sleeve seam if the seam type "right and left sleeve seam" was selected in the basic setting, see Chapter 11.01.01 Basic setting for seam program input.



- If necessary, insert the seam section.
  The current seam section is copied and all following seam sections are set one place back.



- If necessary, delete the current seam section.



- If necessary, conclude the input of the current seam and store the parameter for the seam of the other sleeve in the reverse order (mirror seam).



- Set the seam end or program end.
  If entering only one seam (only the right or only the left sleeve seam) the program end is set in the desired seam section.
  In the same way as the program end, the seam end is set when entering the right and left sleeve seam. The seam end is set in the first sleeve seam and the program end in the second sleeve seam.



- Conclude the input of the first seam section and change to the next seam section.



- Conclude the input and change to the input of the basic settings.



- Conclude the input and change to programmed sewing.

11.01.03 Seam program input with the "Teach-in" function

With this function the seam program is created by sewing a sample. A new program is always created, i.e. if an existing program is selected, this will be overwritten.

- Switch on the machine.
- Select a program number from 3 – 49, see Chapter 9.07 Selecting a program number.



- Call up the input mode.



- Call up the "Teach in" function.



- Carry out the basic settings and conclude with the "Enter" function, see Chapter 11.01.01 Basic setting for seam program input.

Before sewing starts the following displays and functions appear on the screen.

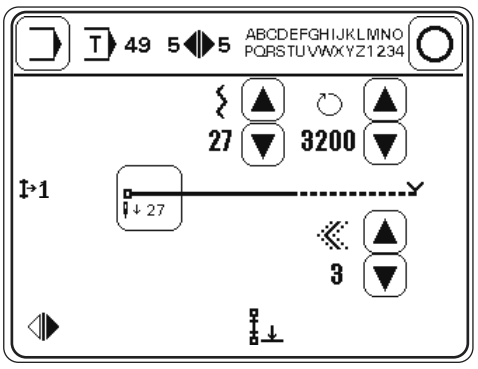



- This function is used to call up the menu for entering the placement stitch at the beginning of the seam.



- Adjust the fullness, see Chapter 9.08 Inputting fullness.



- Change maximum speed for the current seam section.



- Change the graduated value.
  The graduated value is used to adapt different garment sizes to the programmed basic size.

- Sew the first seam section using the pedal function.
  The number of stitches in the current seam section is shown on the display.

After sewing the following displays and functions appear on the screen.

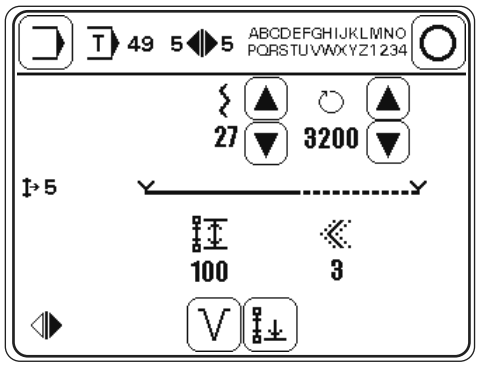



- Switch to the next seam section.
  The seam section change can be called up
  by activating the appropriate function or
  by pressing the knee switch (with the appropriate setting of parameter "201",
  see Chapter 13.08 Parameter settings).



- Set the seam end or program end.
  If entering only one seam (only the right or the left) the program end is set in the desired seam section.
  In the same way as the program end, the seam end is set when entering the right and left seam. The seam end is set in the first seam and the program end in the second seam.



- Conclude the input and change to the input of the basic settings.



- Conclude the input and change to programmed sewing.

11.02 Examples of how to create seam programs

11.02.01 Example of a seam program input using the "Creating/adjusting a program" function

The seam program to be created should
- to begin with only consist of the right sleeve seam,
- have 2 seam sections,
- be based on the basic size 50 (German men's sizes) and
- be stored under the program number "4" with the comment "PROG".

- Switch on the machine.



- Call up the input mode.



- Call up the "creating/adjusting a seam program" function and enter program number "4".

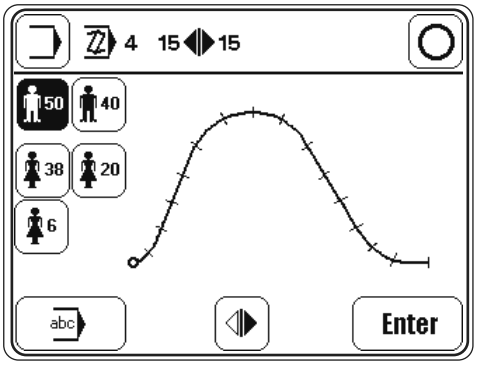



- Set basic size "50".



- Set the seam type (right seam) by pressing until the appropriate symbol appears.

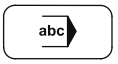

- Call up the menu for comment input.

- Enter the comment "PROG" with the keyboard and number panel.



- Conclude the comment input.



- Change to the input of the first seam section.

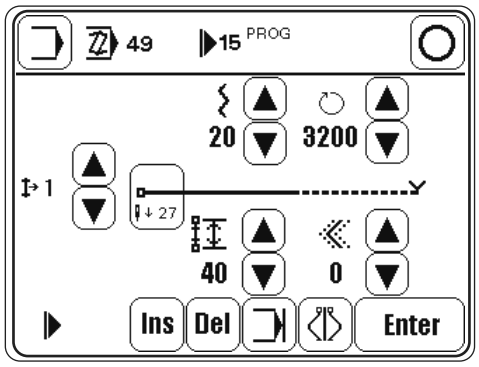

In the first seam section
- the number of stitches should be "20" and
- the seam should be sewn with a graduated value of "2" without fullness.

The values for the placement stitch and the maximum speed remain unchanged.



● Enter the value "0" for the fullness.



● Enter the value "20" for the number of stitches.



● Enter graduated value "2".

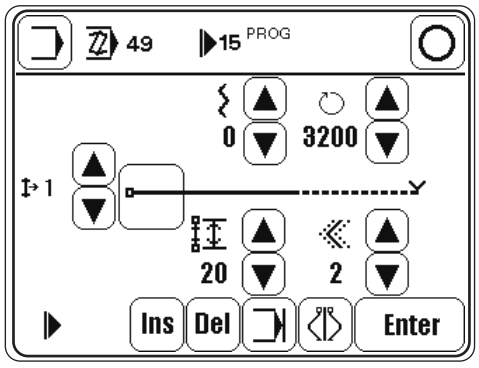



● Change to the input of the second seam section.

In the second seam section
- the number of stitches should be "10" and
- the seam should be sewn without a graduated value and with a fullness value of "30".

The value for the maximum speed is taken over unchanged from the first seam section.



● Enter the value "30" for the fullness.



● Enter the value "10" for the number of stitches.



● Enter graduated value "0".

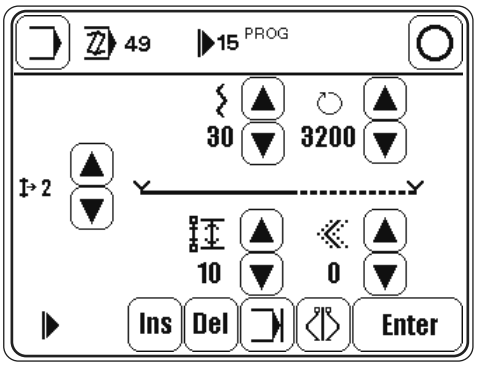

- Activate the "end of program" function.
- Conclude the seam program and change to programmed sewing.

11.02.02 Example of a seam program input using the "teach-in" function

The seam program to be created should
- to begin with only consist of the left sleeve seam,
- have 2 seam sections,
- be based on the basic size 6 (American ladies' sizes) and
- be stored under the program number "11" with the comment "TEACH".

- Switch on the machine.
- Select program number "5", see Chapter 9.07 Selecting a program number.
- Call up the input mode.
- Call up the "teach-in" function and enter program number "11".

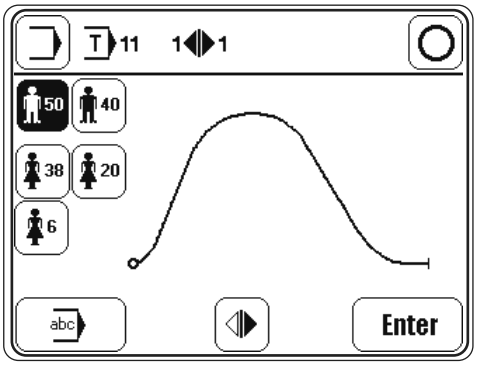

- Set basic size "6".
- Set the seam type (only right seam) by pressing until the appropriate symbol appears.

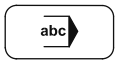

- Call up the menu for comment input.
- Enter the comment "TEACH" with the keyboard and number panel.



- Conclude the comment input.



- Change to the input of the first seam section.

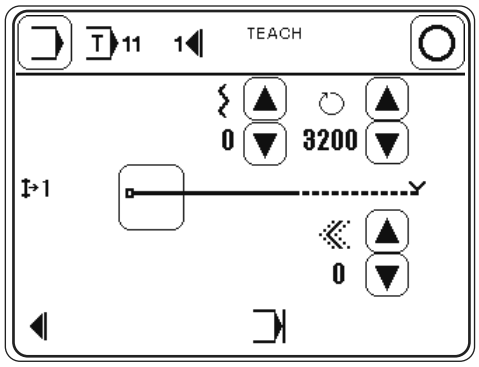

The first seam section should be sewn
- without fullness (value "0")
- with a graduated value of "3".



- Enter graduated value "3".
- Sew the first seam section using the pedal function.

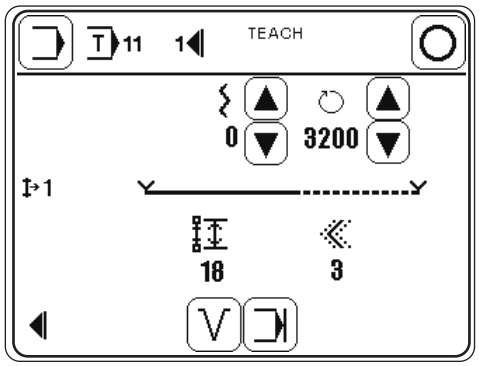



- Change to the input of the second seam section.

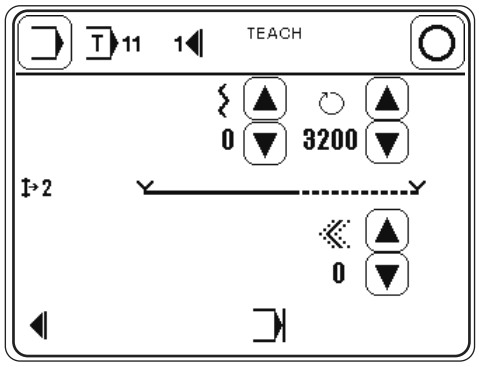

The second seam section should be sewn
- with a fullness value "30" and
- with a graduated value of "3".



- Enter the value "30" for the fullness.



- Enter graduated value "3".

- Sew the second seam section using the pedal function.

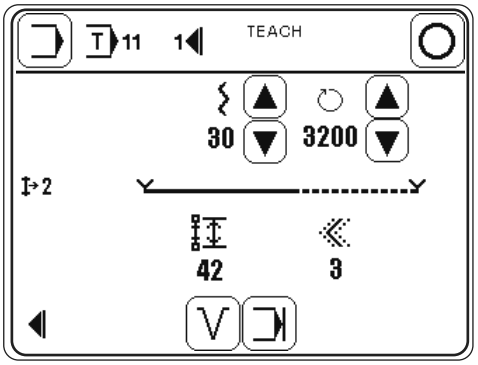

- By operating the pedal, carry out the thread trimming function (2x in reverse), see Chapter 7.02 Pedal.

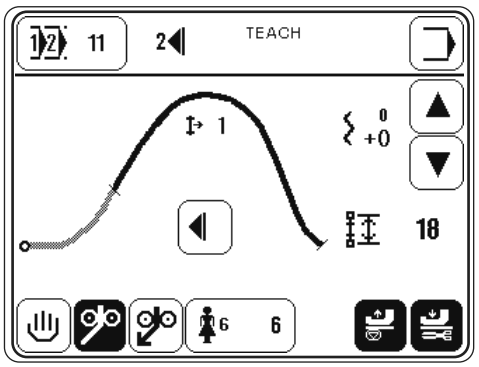



- Activate the "end of program" function.



- Conclude the seam program input and change to programmed sewing.

11.03 Seam program administration

In the program administration the seam programs deposited in the machine memory and the SD-Card can be deleted and copied. The left side of the display shows the programs in machine memory. The right side of the display shows the programs on the SD-Card. Selected programs are red marked. With the MDAT-function the machine configuration can be copied or deleted. The Format-function formats the SD-Card. Further actions are shown in a dialog window.
After SD-Card insertion it takes up to 20s until the card is detected.

- Switch on the machine.



- Call up the input mode.



- Call up program administration.
  Read SD-Card and machine memory again.

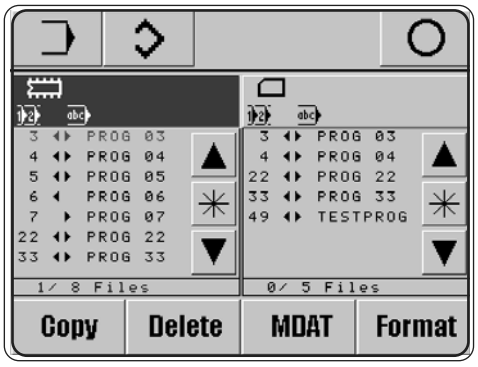

Explanation of the functions



Input mode
Calls up the basic display for the input mode.



Sewing mode
Quit input mode and call up sewing mode.



Program selection
After the program administration has been selected, at least one seam program is always marked. Using the arrow functions, the desired seam program can be selected. With the *-function and the arrow functions a seam program block can be marked. By pressing the *.function again, the block function is deactivated.



Copy
Selected seam programs are copied from/to SD-Card.



Delete
Selected seam programs are deleted.

Dialog window
The dialog window shows questions and additional buttons for the answers.
Enter button



Enter button
Yes for one seam program.



All button
Yes for one or all marked seam programs.



Esc button
No for one or all marked seam programs.



Next button
No for one seam program.



Machine configuration
With the MDAT-function the machine configuration can be copied to/from SD-Card or can be deleted on the SD-Card (filename: MDAT).



Format SD-Card
The Format-function formats the SD-Card.
If the SD-Card is not readable, it is new formatted. If the SD-Card is readable and the directory \P3801 for the 3801-machine exists then all seam programs and the machine configuration (MDAT) are deleted in this directory.
If the directory \P3801 for the 3801-machine does not exist, only the directory \P3801 is created. So all other files and directories on the SD-Card are not corrupted.
It is recommended to use SD-Cards with a maximum capacity of 2 GB.

12 Care and Maintenance

Clean looper compartment	daily, several times if in continuous use
Clean the entire machine	once a week
Check the oil level	daily, before use
Lubricate the articulated joints of the top feed	once a week
Check/adjust the air pressure	daily, before use
Clean air filter of air filter/regulator	as required

These maintenance intervals are calculated for the average running time of a single shift operation. If the machine is operated for a longer period, shorter intervals are recommended.

12.01 Cleaning

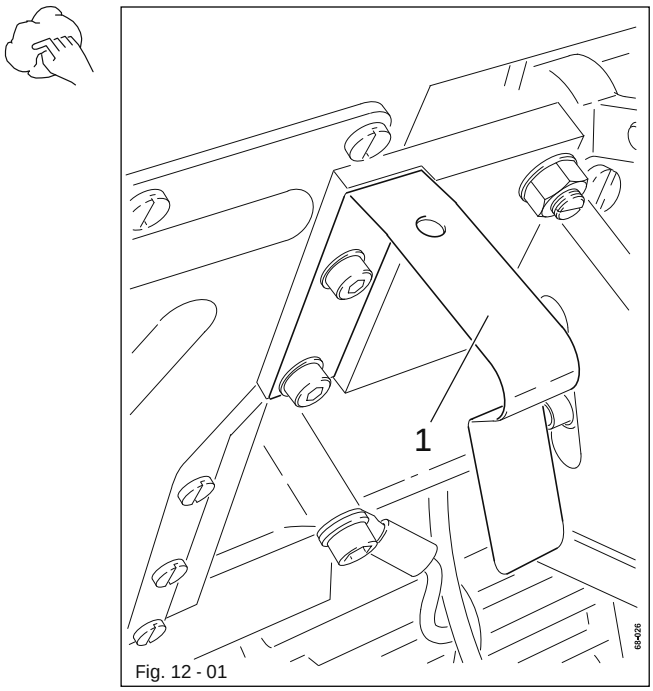

Fig. 12 - 01

Switch the machine off!
Danger of injury if the machine is started accidentally!

- Tilt sewing head back.
- Clean looper and looper compartment daily, several times if in continuous operation.
- When returning the machine to an upright position, make sure that tilt lock 1 is pressed.

Use both hands to set the sewing head upright!
Danger of crushing between the sewing head and the table top!

12.02 Machine oil level



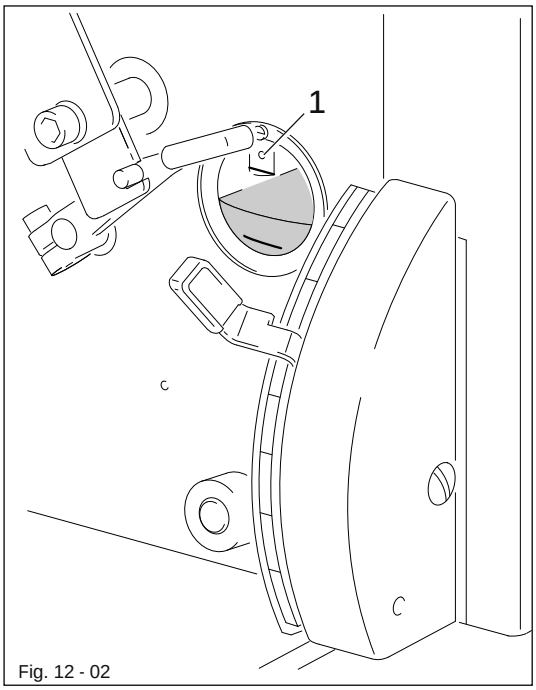

Fig. 12 - 02



Check oil level before each use.

- The oil level must be between the markings in the inspection glass.
- If required refill oil through hole 1.



Only use oil with a mean viscosity of 22.0 mm²/s at 40° C and a density of 0.865 g/cm³ at 15° C!.



We recommend PFAFF sewing machine oil. Order-No. 280-1-120 144.

12.03 Cleaning/lubricating the top feed joints



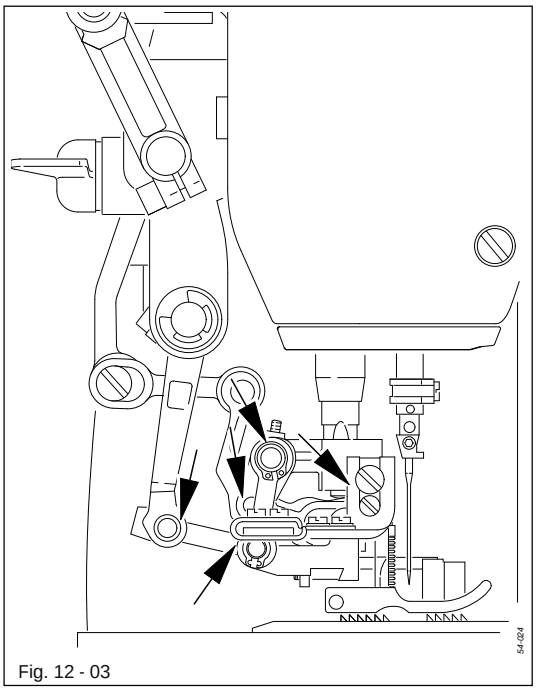

Fig. 12 - 03

- Once a week or after the machine has stood still for longer periods, clean the points marked in the illustration with the special cleaner, part no. 99-137 468-91.
- Afterwards lubricate these points with the special lubricant, part no. 99-137 467-91 (wipe off surplus lubricant with a cloth).

12.04 Checking/adjusting the air pressure

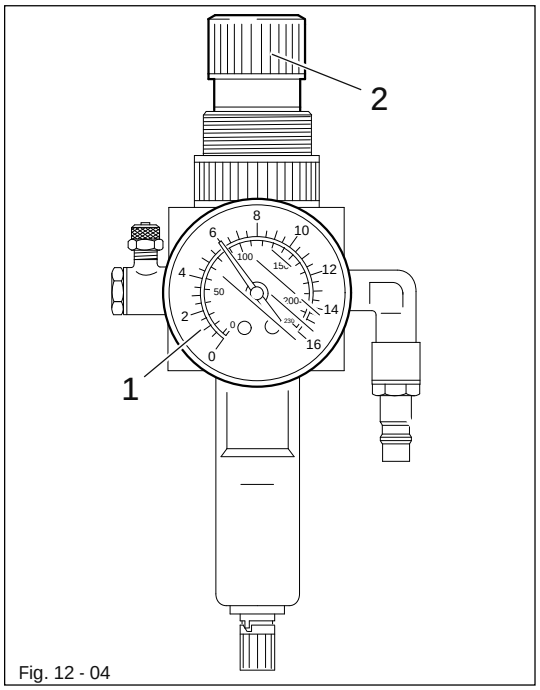

Fig. 12 - 04

- Before operating the machine, always check the air pressure on gauge1.
- Gauge 1 must show a pressure of 6 bar.
- If necessary adjust to this reading.
- To do so, pull knob 2 upwards and turn it so that the gauge shows a pressure of 6 bar.

12.05 Cleaning the air filter of the air-filter/lubricator



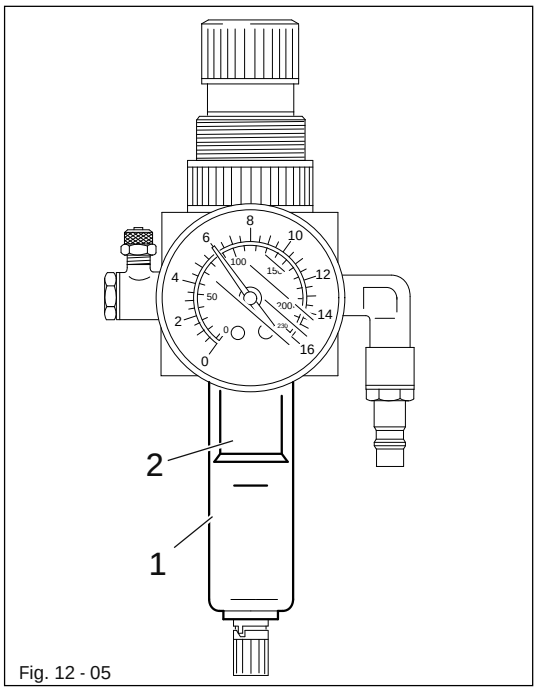

Fig. 12 - 05



Switch the machine off!
Disconnect the air hose at the air-filter/lubricator.

To drain water bowl 1:

- Water bowl 1 drains itself automatically when the compressed-air hose is disconnected from the air-filter/lubricator.

Cleaning filter 2:

- Unscrew water bowl 1.
- Take out filter 2.
- Clean filter 2 with compressed air or isopropyl alcohol (part No. 95-665 735-91).
- Screw in filter 2 and screw on water bowl 1.

13 Adjustment



Please observe all notes from Chapter 1 Safety of the instruction manual! In particular care must be taken to see that all protective devices are refitted properly after adjustment, see Chapter 1.06 Danger warnings of the instruction manual!



If not otherwise stated, the machine must be disconnected from the electrical power supply.

13.01 Notes on adjustment

All following adjustments are based on a fully assembled machine and may only be carried out by expert staff trained for this purpose.
Machine covers, which have to be removed and replaced to carry out checks and adjustments, are not mentioned in the text.
The order of the following chapters corresponds to the most logical work sequence for machines which have to be completely adjusted. If only specific individual work steps are carried out, both the preceding and following chapters must be observed.
Screws, nuts indicated in brackets ( ) are fastenings for machine parts, which must be loosened before adjustment and tightened again afterwards.

13.02 Tools, gauges and other accessories for adjusting

- 1 set of screwdrivers with blade widths from 2 to 10 mm
- 1 set of fork wrenches with jaw widths from 6 to 22 mm
- 1 set of Allan keys from 1.5 to 6 mm
- 1 brass drift, ø 6 - 8 mm
- 1 original Seeger pliers
- 1 pair of pincers, 90° offset
- 1 adjustable clamp, (Part No. 61-111 600-35)
- 1 metal rule, (Part No. 08-880 218-00)
- 1 adjustment pin, ø 5 mm (Part No. 13-030 341-05)
- 1 adjustment gauge (Part No. 61-111 642-19)
- 1 looper adjustment gauge (Part No. 61-111 643-06)
- Needles, system 4463-35
- Sewing thread and test material
- Spacing rings: 0.3/0.5/0.8 and 1.2 mm

13.03 Abbreviations

TDC = top dead center
BDC = bottom dead center

13.04 Checking and adjusting aids

By inserting the adjustment pin (ø 5 mm) into holes 1, 3 and 4 the needle bar can be fixed precisely in the desired position.

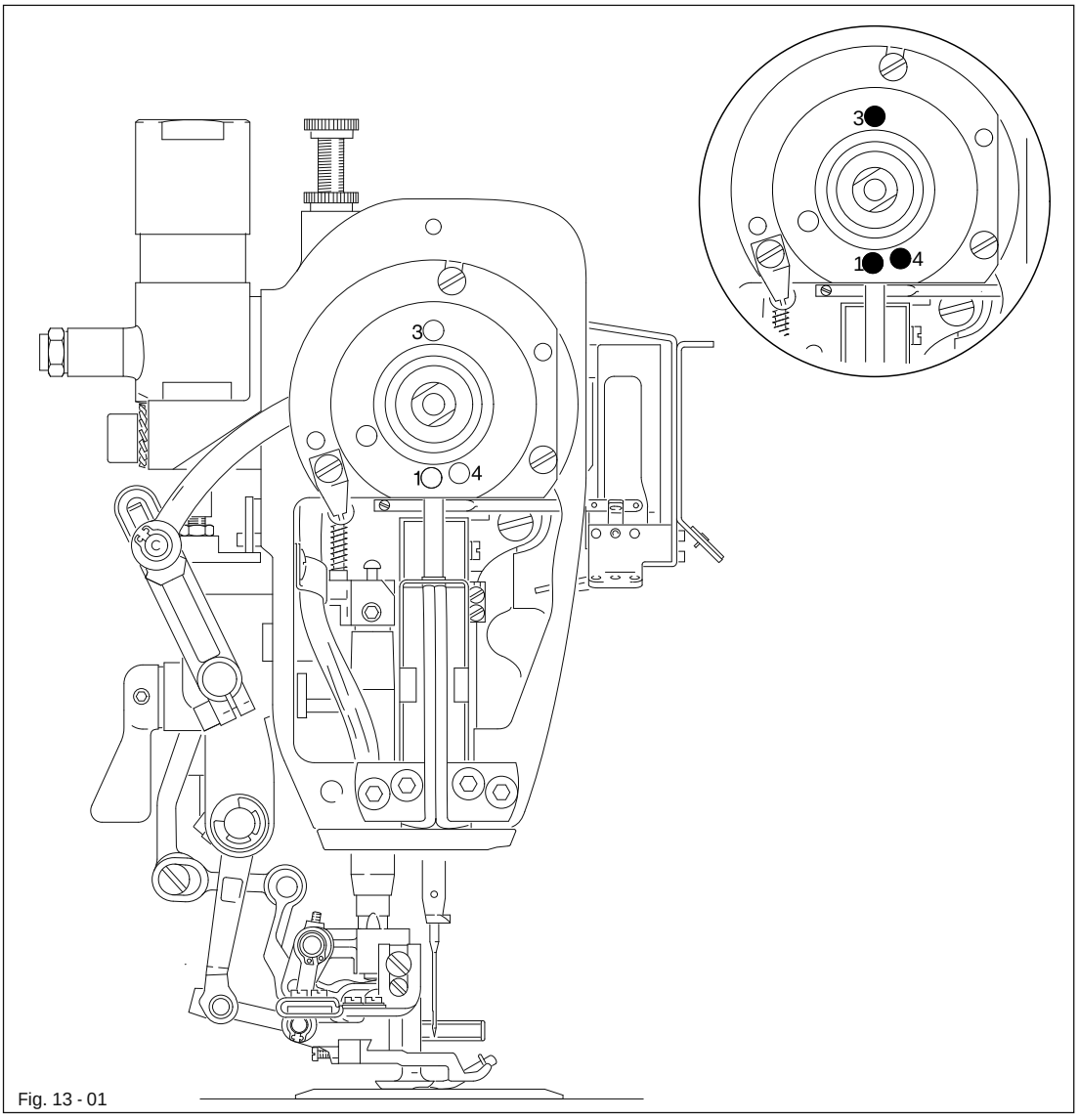

Fig. 13 - 01

- Turn the handwheel until the needle bar is approximately in the desired position.
- Insert the adjustment pin into the respective hole and apply pressure.
- Turn the handwheel slightly forwards and backwards until the adjustment pin engages in the rear crank recess and thus blocks the machine.

Hole 1 = top dead center of the needle bar (TDC)
Hole 3 = bottom dead center of the needle bar (BDC)
Hole 4 = 0.8 mm below the top dead center of the needle bar (0.8 below TDC)

13.05 Adjusting the basic machine

13.05.01 Basic position of the machine

- Switch on the machine.



- Call up the input mode.

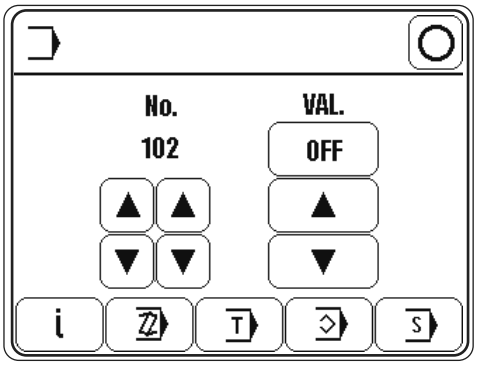



- Call up parameter "301".

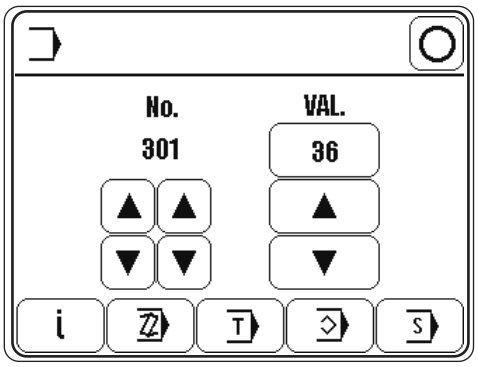

- By turning the balance wheel, position the needle point flush to the top edge of the needle plate.



- Conclude the input.
- Switch off the machine.

13.05.02 Position of needle to needle hole

Requirement

1. As seen crosswise to the direction of sewing, needle 5 should enter the needle hole in the centre.
2. The distance between needle 5 and the front edge of the needle hole should be approx. 0.8 mm.

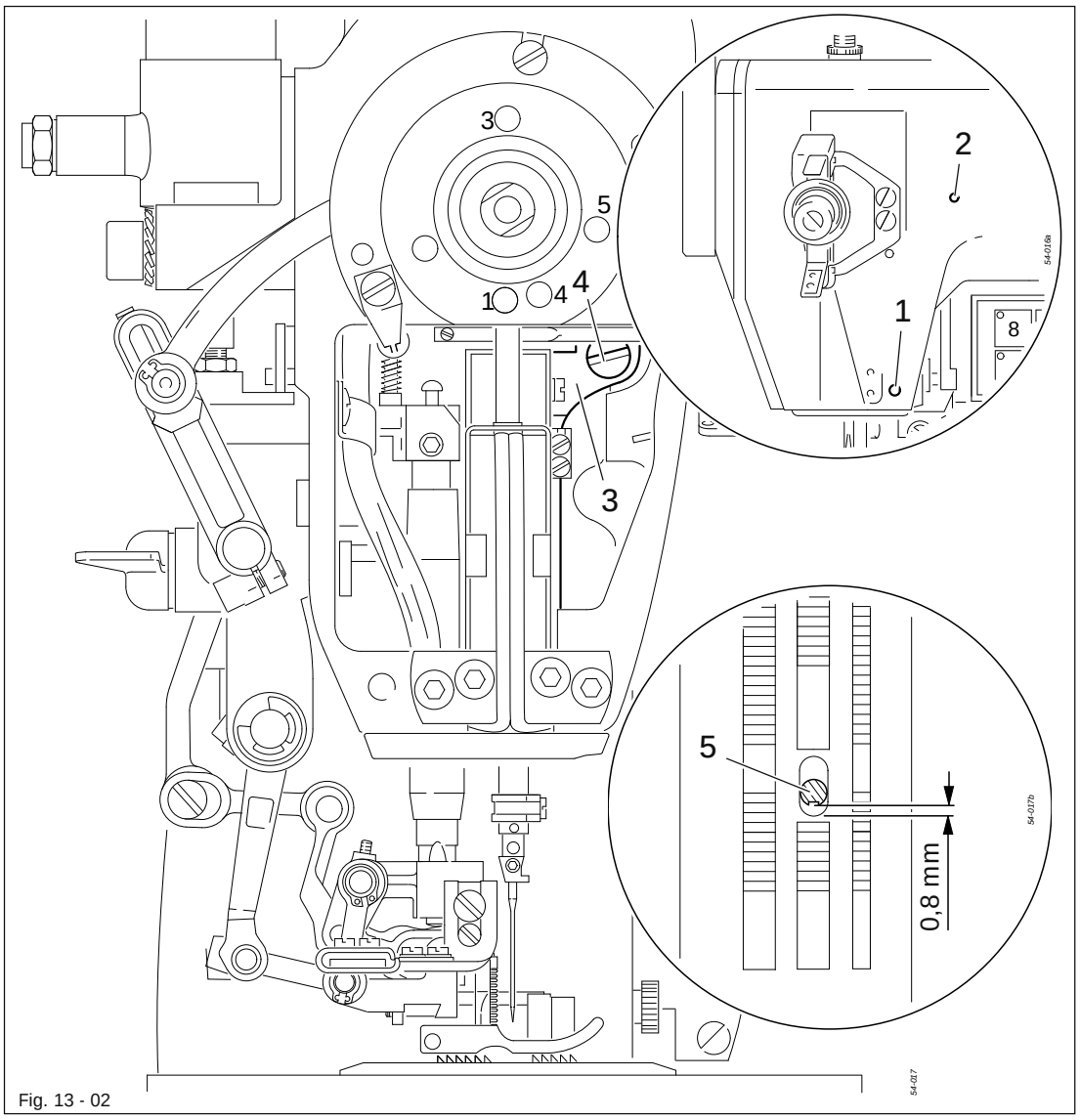

Fig. 13 - 02

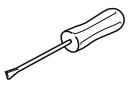

- Loosen screws 1 and 2.
- Adjust needle bar frame 3 according to requirement 1 and tighten screw 1.
- Loosen screw 4 and turn needle bar frame 3 according to requirement 2.
- Tighten screws 2 and 4.

13.05.03 Pre-adjusting the needle height

Requirement
At the top dead center of the needle bar (hole 1), the clearance between the needle plate and the point of the needle must be 11 mm.

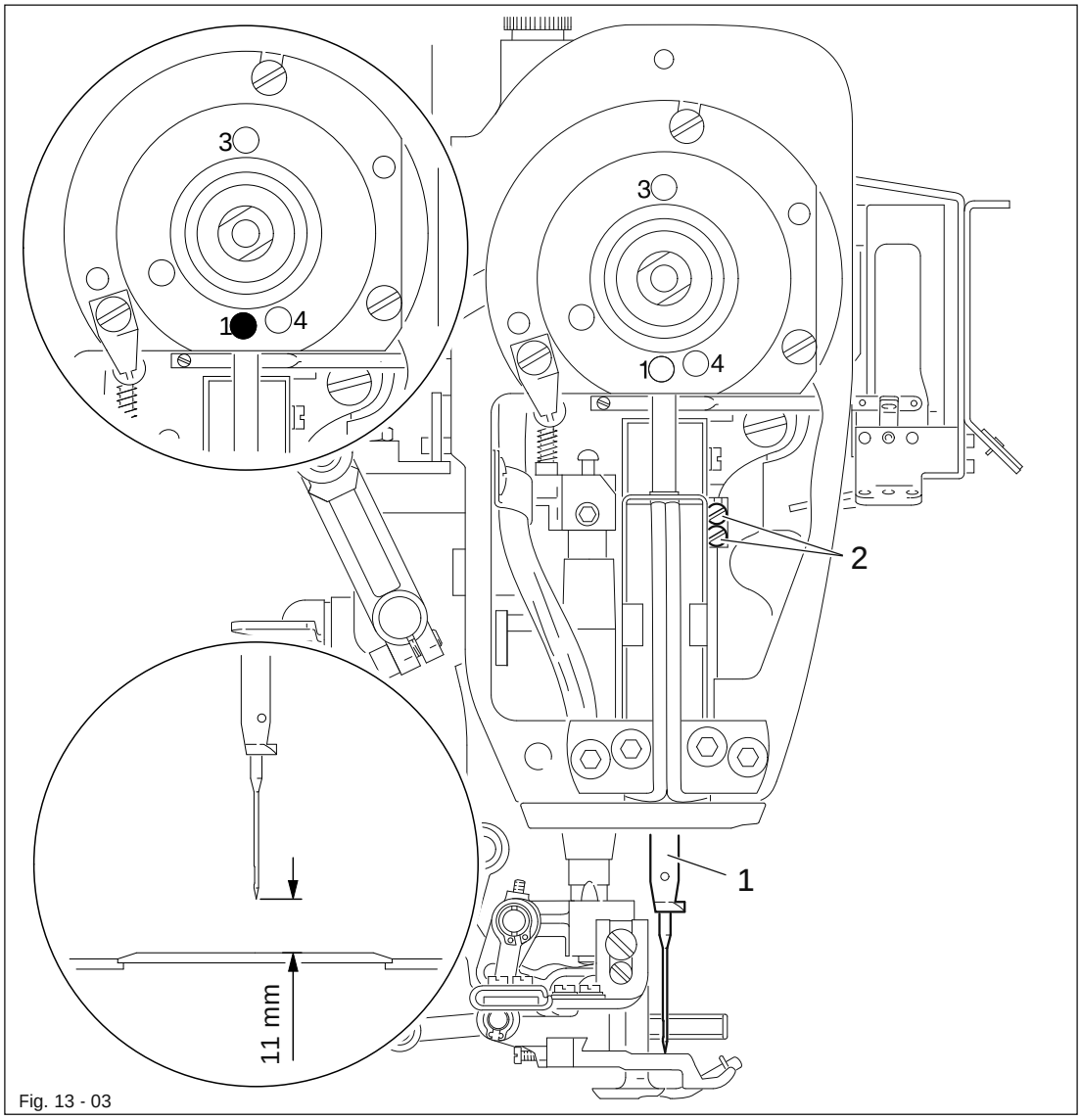

Fig. 13 - 03

- Bring the needle bar 1 to its TDC.
- Move the needle bar 1 in accordance with the requirement.

13.05.04 Neutral position of the main feed dog

Requirement
When the stitch length is set at "0", there should be no feeding motion of the main feed dog 7**.**

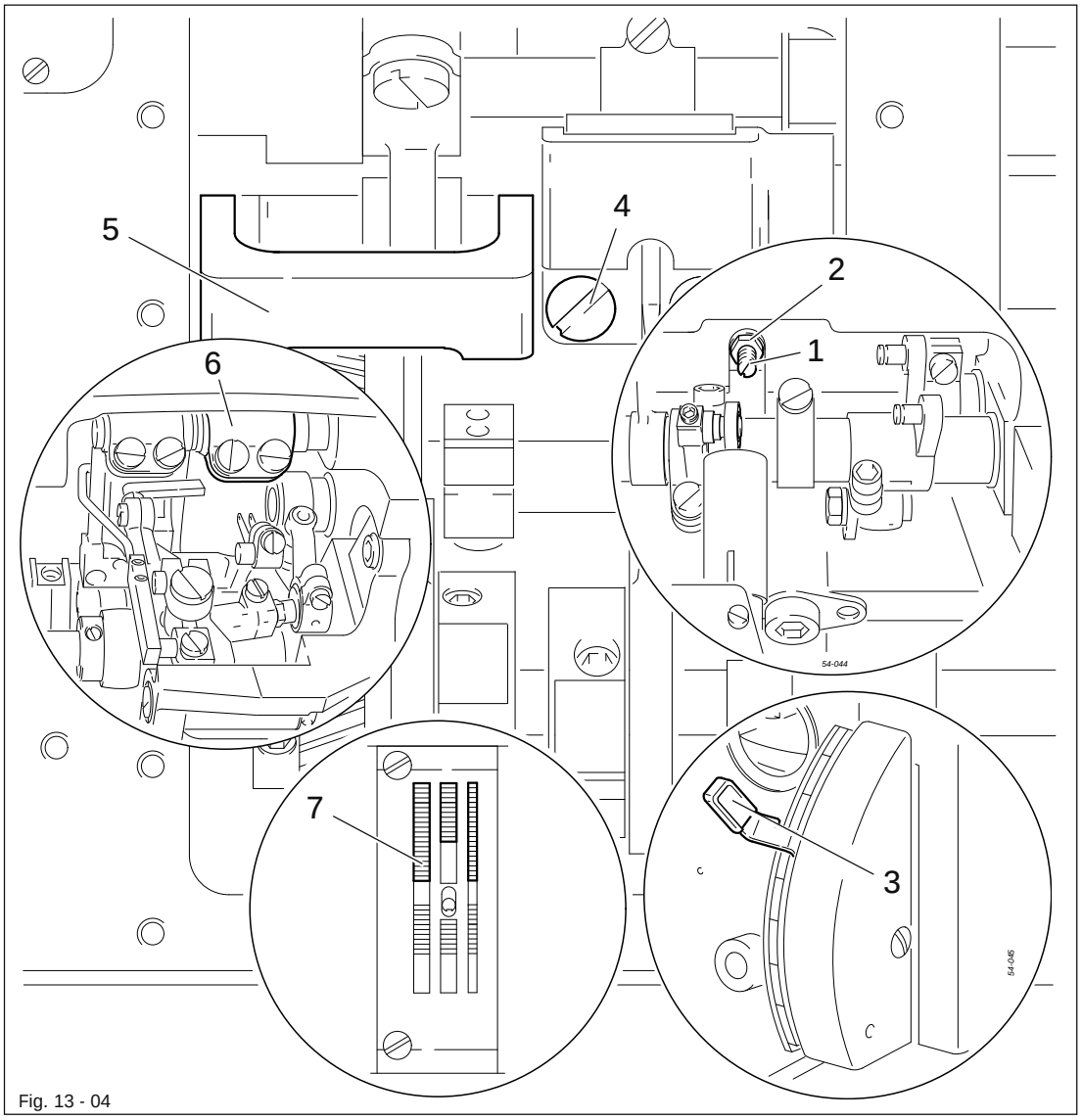

Fig. 13 - 04

- Unscrew screw 1 (nut 2) (stitch length limitation deactivated).
- With adjustment lever 3 set stitch length to "0".
- Loosen screw 4 to such an extent that crank 5 can be moved on the shaft with difficulty.
- While turning the balance wheel continuously, adjust crank 5, so that crank 6 does not move.
- Tighten screw 4.

Screw 1 (nut 2) remains loosened for further adjustments.
(Stitch length limitation is still deactivated).

13.05.05 Zero position of the differential feed dog

Requirement
At stitch length setting " 0 " and with adjustment gauge 1 fitted, differ-ential feed dog 5 must not make any movement.

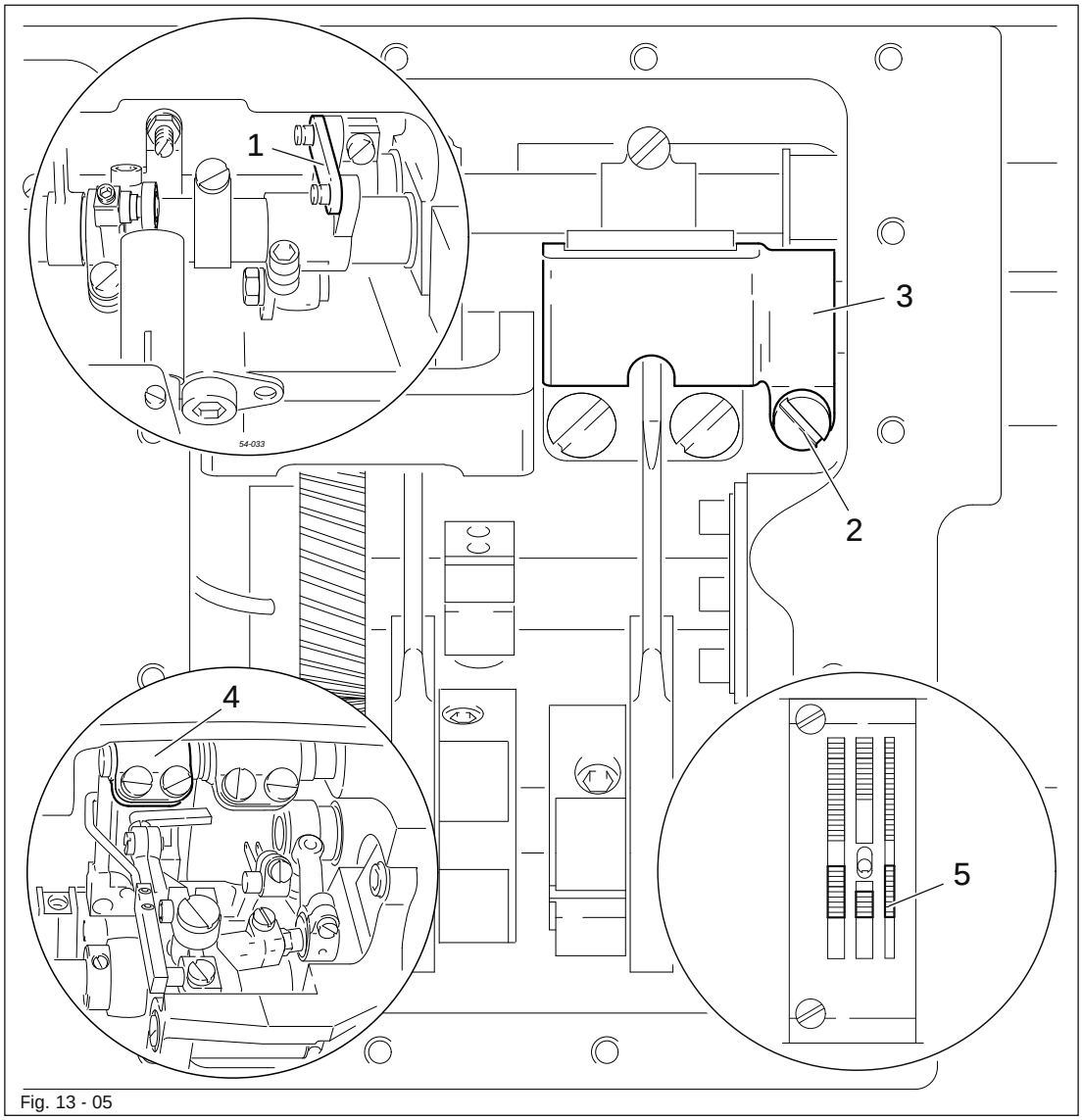

Fig. 13 - 05

- Set stitch length at " 0 " .
- Fit adjustment gauge 1.
- Undo screw 2 just enough to allow crank 3 to be turned on the shaft.
- Turn the balance wheel continuously and turn crank 3 to the position in which crank 4 no longer moves.
- Tighten screw 2.

Leave adjustment gauge 1 in place for further adjustments.

13.05.06 Feeding motion of main- and differential feed dogs

Requirement
With the longest stitch length set, the needle bar in position 0.8 before t.d.c. (hole 4) and adjustment gauge 8 fitted, the main- and differential feed dogs must not move when lever 5 is operated.

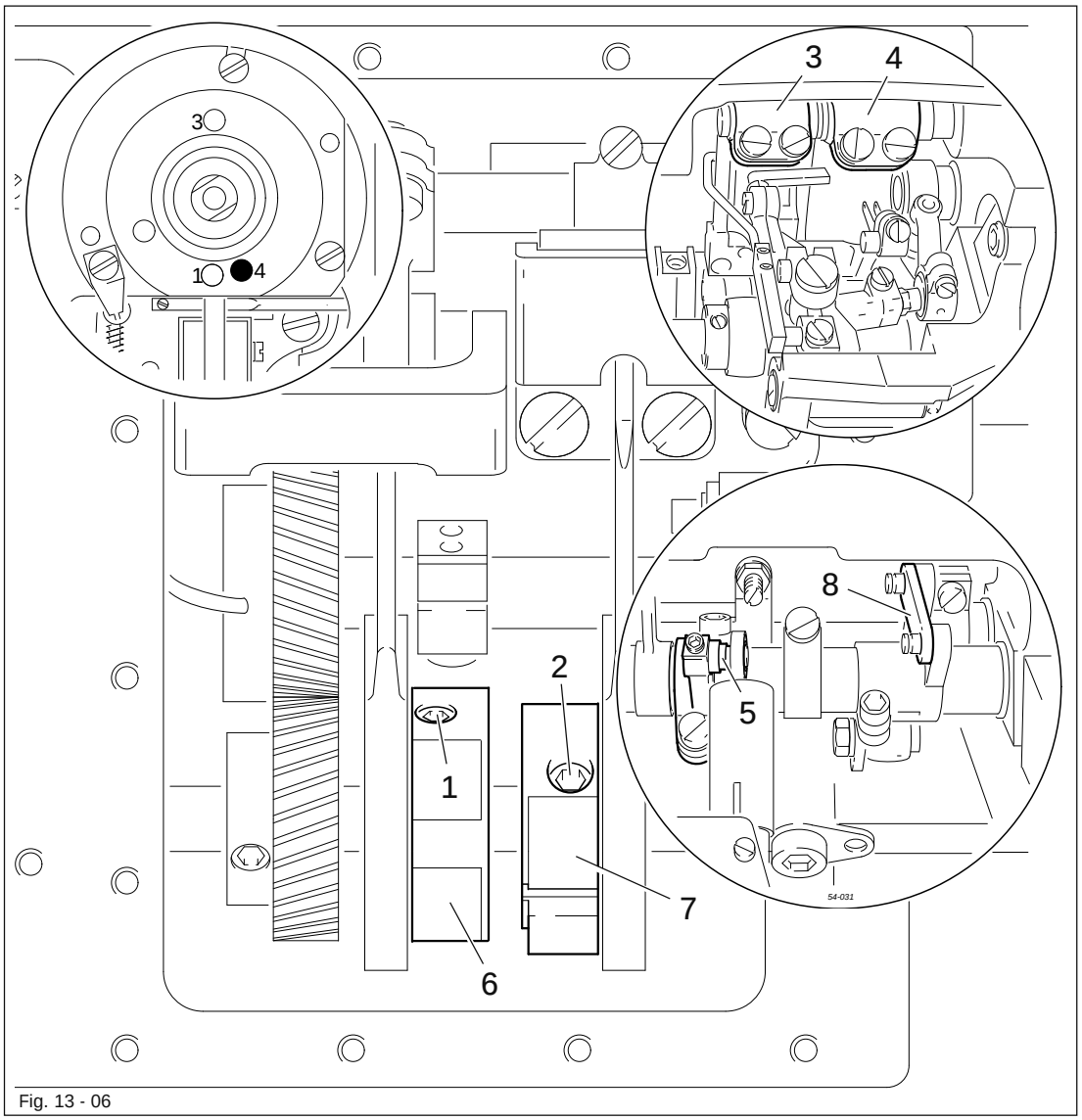

Fig. 13 - 06

- Loosen screws 1 and 2 (four screws) just a little.
- Set needle bar at 0.8 before t.d.c. and set the longest stitch.
- Continously move lever 5 up and down and turn eccentrics 6 and 7 so that the coutout is visible and cranks 3 and 4 do not move.
- Fully tighten screws 1 and 2.

13.05.07 Lifting motion of main- and differential feed dogs

Requirement
With the needle bar at t.d.c. (hole 1) the cutouts of eccentrics 3 and 4 must face vertically downwards.

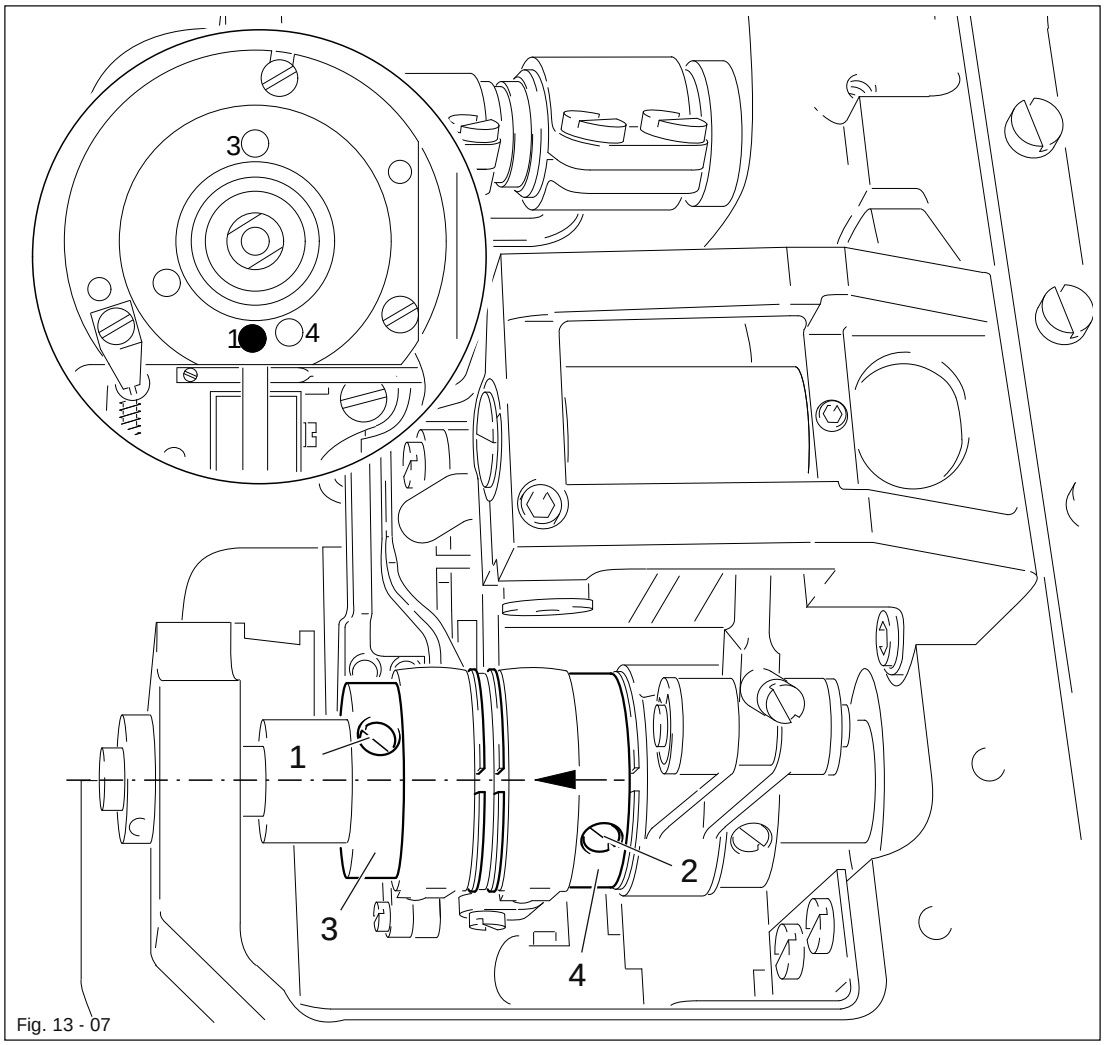

Fig. 13 - 07

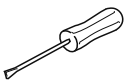

- Loosen screws 1 and 2 (four screws).
- Set needle bar at t.d.c.
- Turn eccentrics 3 and 4 according to Requirement and fully tighten the accessible screws 1 and 2.
- Turn balance wheel to make the remaining screws 1 and 2 access-ible and fully tighten them.

13.05.08 Position of main- and differential feed dogs

Requirement
When the needle bar is at t.d.c (hole 1) and the longest stitch length is set the main- and differential feed dogs must:
1. rest their full length on adjustment gauge 5,
2. be centred in the feed slots of the needle plate, and
3. clear each other by 4 mm.

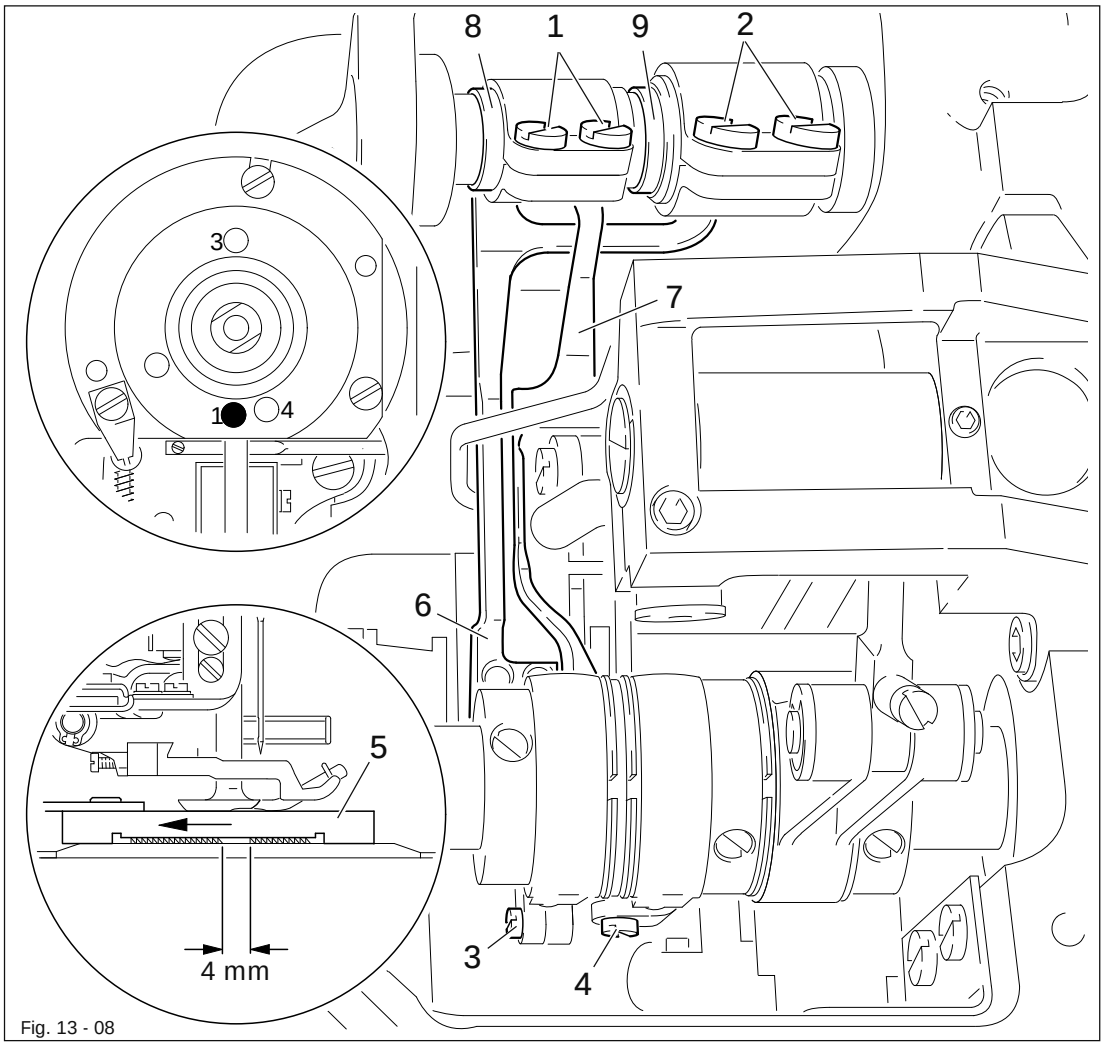

Fig. 13 - 08

- Set needle bar at t.d.c. and set longest stitch length.
- Loosen screws 1, 2, 3 and 4.
- Raise lifting presser and place adjustment gauge 5 (part No. 61-111 642-19) under the lifting presser with its cutout facing downwards so that the arrow on gauge 5 faces in feed direction.
- Push two feed bars 6 and 7 upwards to press the two feed dogs against the gauge.
- Tighten screws 1 and 2 just a little.
- Turn eccentric bushes 8 fand 9 according to Requirements 2 and 3.
- In this position fully tighten screws 3 and 4.
- Making sure that Requirement 1 is fulfilled, fully tighten screws 1 and 2.

13.05.09 Zero position of feeding presser

Requirement
With the stitch length set at " 0 " and adjustment gauge 4 in place the feeding presser must not make any movement.

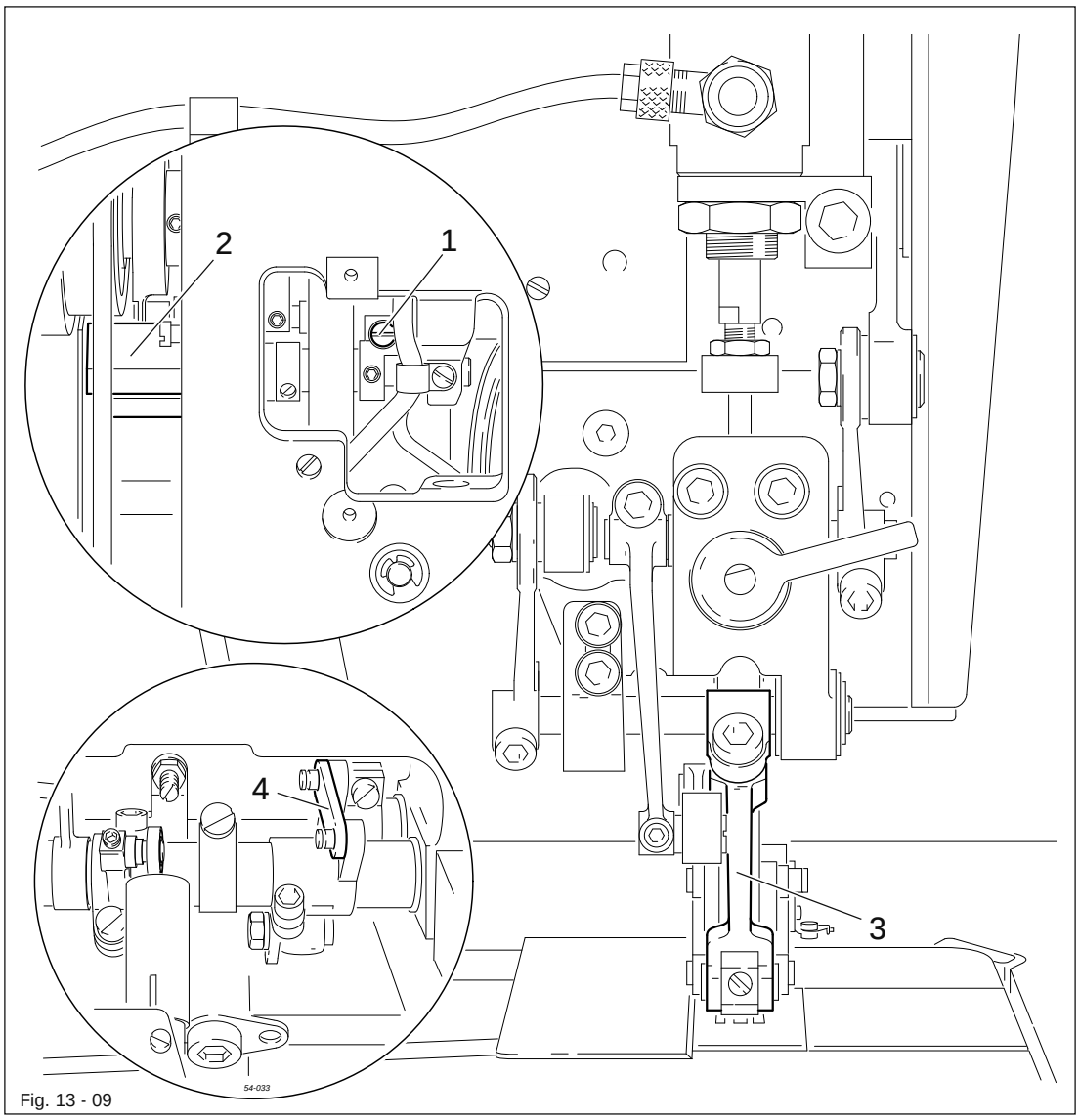

Fig. 13 - 09

- Set feed regulator at " 0 ".
- Undo screw 1 just enough to allow crank 2 to be turned.
- Turn the balance wheel continuously and turn crank 2 to the posit-ion in which lever 3 no longer moves.
- Fully tighten screw 1.

13.05.10 Front driving link of feeding-presser drive

Requirement
With the needle bar at 0.8 mm before t.d.c. (hole 4) there must be a distance of 16.5 mm between the eye of link 2 and machine housing 3.

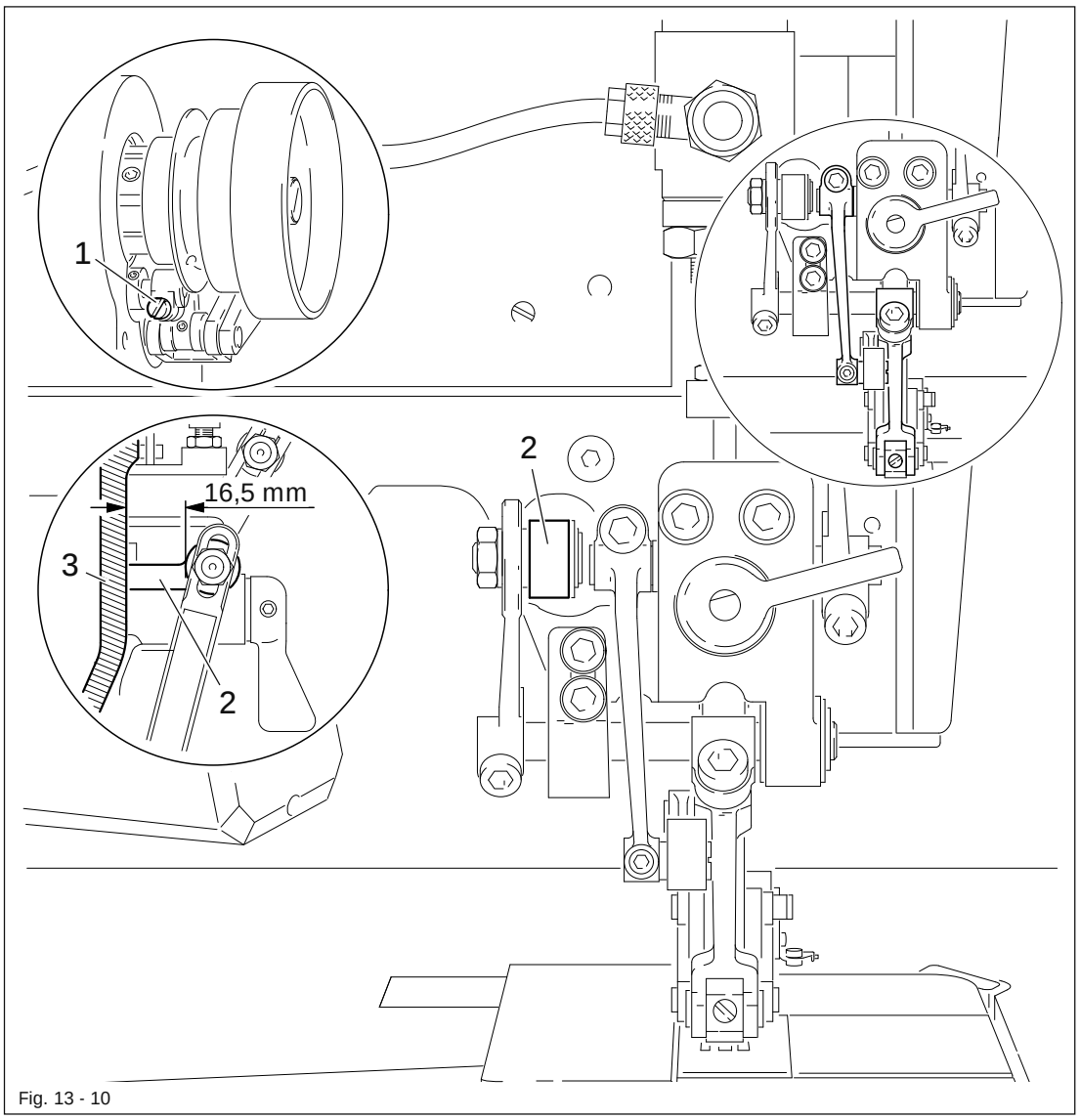

Fig. 13 - 10

- Set needle bar at 0.8 mm before t.d.c.
- Loosen screw 1.
- Adjust link 2 according to Requirement.
- Tighten screw 1.
- Check adjustment.

13.05.11 Positioning the lifting presser

Requirement

1. With presser bar lifter 1 raised there must be a clearance of 5 mm between lifting presser 13 and the needle plate.
2. The needle must enter the centre of the needle hole in lifting presser 13.
3. The edge of the lifting presser must be parallel with the bottom feed dog.

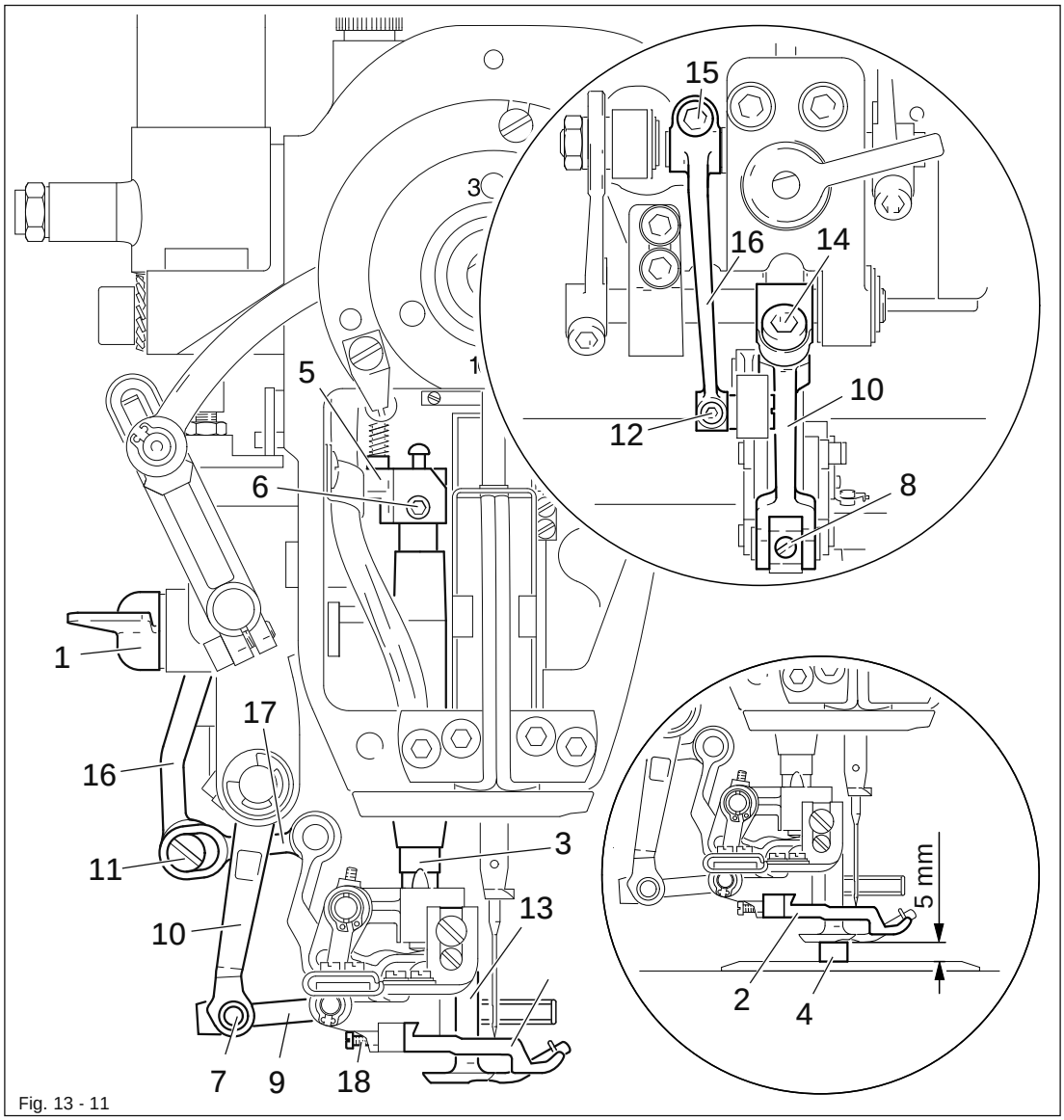

Fig. 13 - 11

- Raise presser bar lifter 1.
- Turn the balance wheel to set feeding presser 2 at its highest point.
- Raise presser bar 3 and push the 5 mm thick part of adjustment gauge 4 (part No. 61-111642-19) under the lifting presser from behind.
- Move lifting piece 5 (screw 6) down as far as it will go.
- Take out pin 7 (screw 8).
- Swing lever 9 out of the fork of lever 10.
- Take out eccentric pin 11 (screw 12).
- Position lifting presser 13 according to the Requirements.

- Tighten screw 6.
- Remove gauge 4 and lower lifting presser 13 onto the needle plate.
- Loosen screw 14.
- Swing lever 9 into the fork of lever 10.
- Insert pin 7 (screw 8), making sure it can move freely.
- If necessary, bend lever 10 accordingly.
- Set needle bar at 0.8 mm before t.d.c.
- Set feeding presser 2 at middle of lifting presser cutout and tighten screw 14.
- Loosen screw 15.
- Connect lever 16 with link 17 using eccentric pin 11 (screw 12) and turn eccentric pin 11 with highest eccentric part facing downwards.
- Move lever 16 up against eccentric pin 11 and tighten screw 15.
- Position feeding presser 2 (screw 18) so that it does not touch lifting presser 13 to the side.



All moving parts of the top feed drive must run smoothly and without any backlash.
Lubricate the joints at regular intervals, see Chapter 12.03 Lubricating the top feed joints.

13.05.12 Feeding motion of the top feed dog

Requirement
When the maximum stitch length is set, and the needle bar is positioned 0.8 mm before t.d.c. (hole 4), lever 4 should not move when lever 2 is operated.

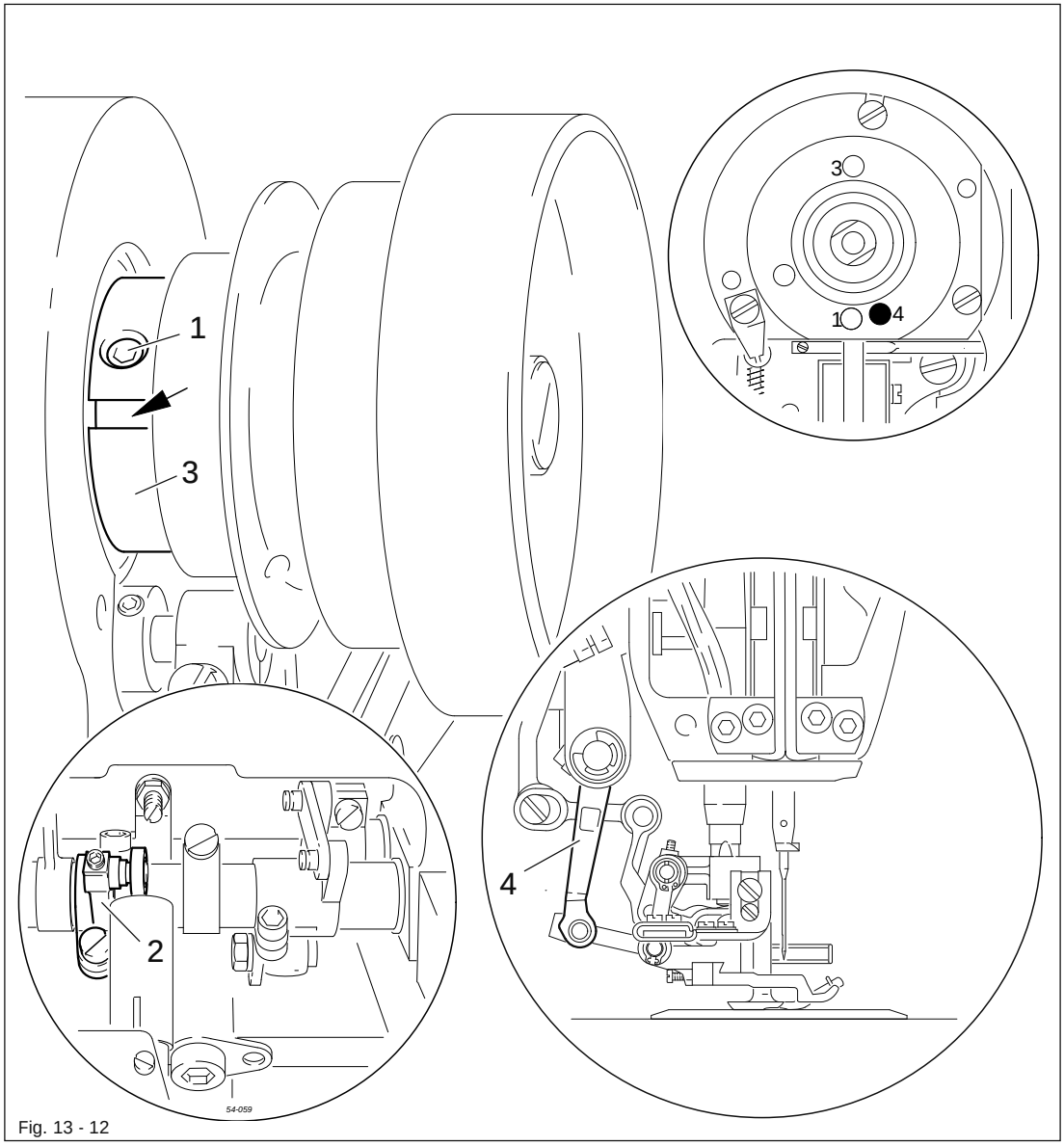

Fig. 13 - 12

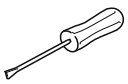

- Loosen both screws 1.
- While continuously moving lever 2 up and down, adjust eccentric 3, so that the slot is pointing towards the operator and lever 4 does not move.
- Tighten screws 1.

13.05.13 Lift of feeding presser

Requirement
With the stitch length set at " 2.5 " and the adjustment gauge in place, the feeding presser 2 must clear the needle plate by 3.2 mm when at the top of its stroke.

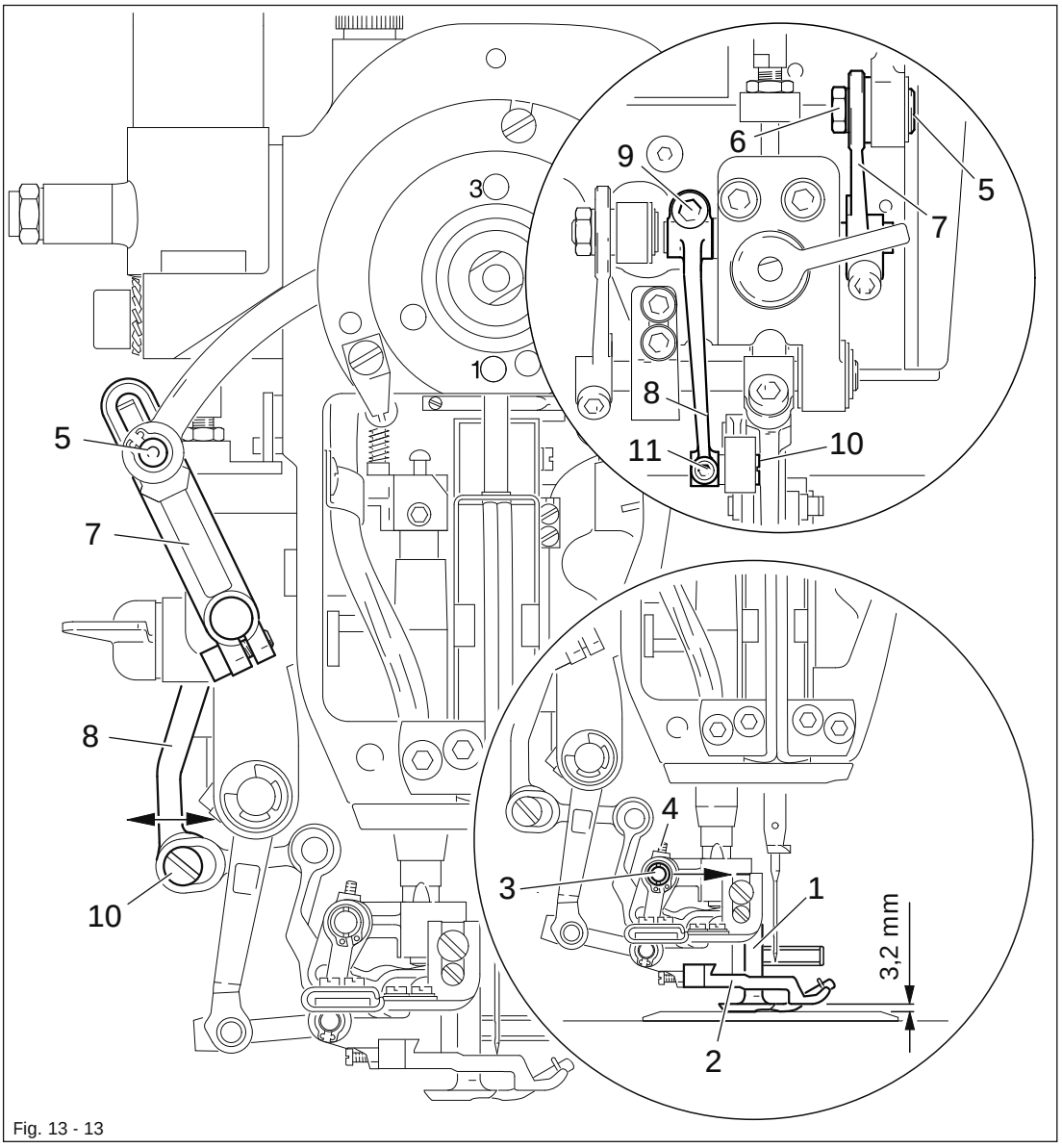

Fig. 13 - 13

- Lower lifting presser 1 onto needle plate.
- Set stitch length at " 2.5 " and turn balance wheel to set lifting presser 2 at the top of its stroke.
- Turn eccentric pin 3 (screw 4) so that its eccentric side faces the needle (see arrow).
- Move pin 5 (nut 6) fully down in elongated hole of lever 7.
- For preliminary adjustment of clearance between feeding presser 2 and needle plate position lever 8 (screw 9).
- Turn eccentric pin 10 (screw 11) according to Requirement.

13.05.14 Lifting stroke of feeding presser

Requirement
With the stitch length set at " 2.5 " and adjustment gauge 3 in place, the feeding presser must contact the bottom feed dog when the latter has risen to the top surface of the needle plate.

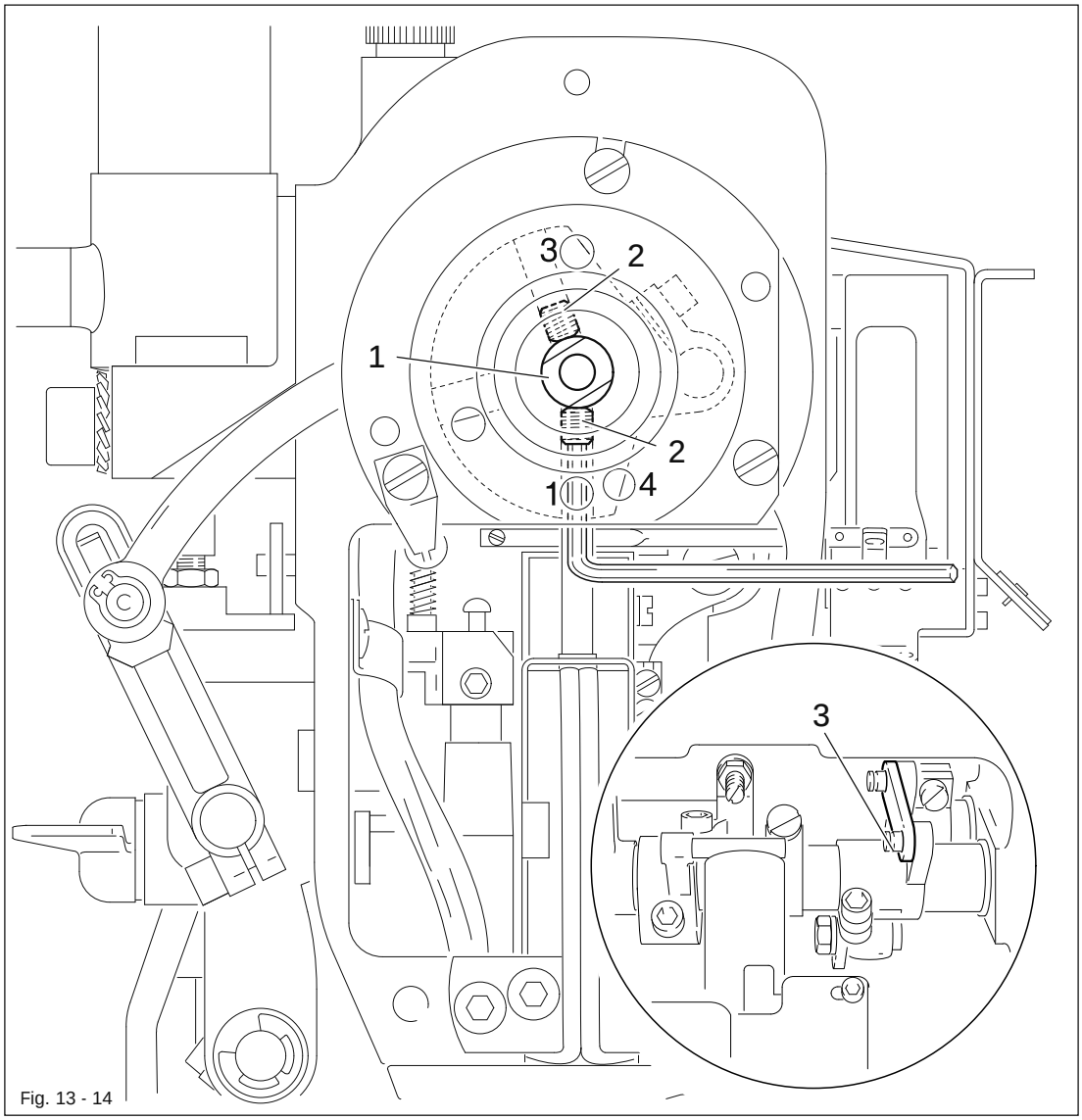

Fig. 13 - 14

- Set the stitch length at " 2.5 ".
- Turn eccentric 1 (screw 2) according to Requirement.

13.05.15 Stitch length limitation

Requirement

1. The bottom stroke of rocking bar 6 should be set so that the stitch length is 2.0 mm (x = 20 mm with 11 penetration points).
2. With the same stitch length screw 4 should slightly touch the casting. (It must no longer be possible to move rocking bar 6.)

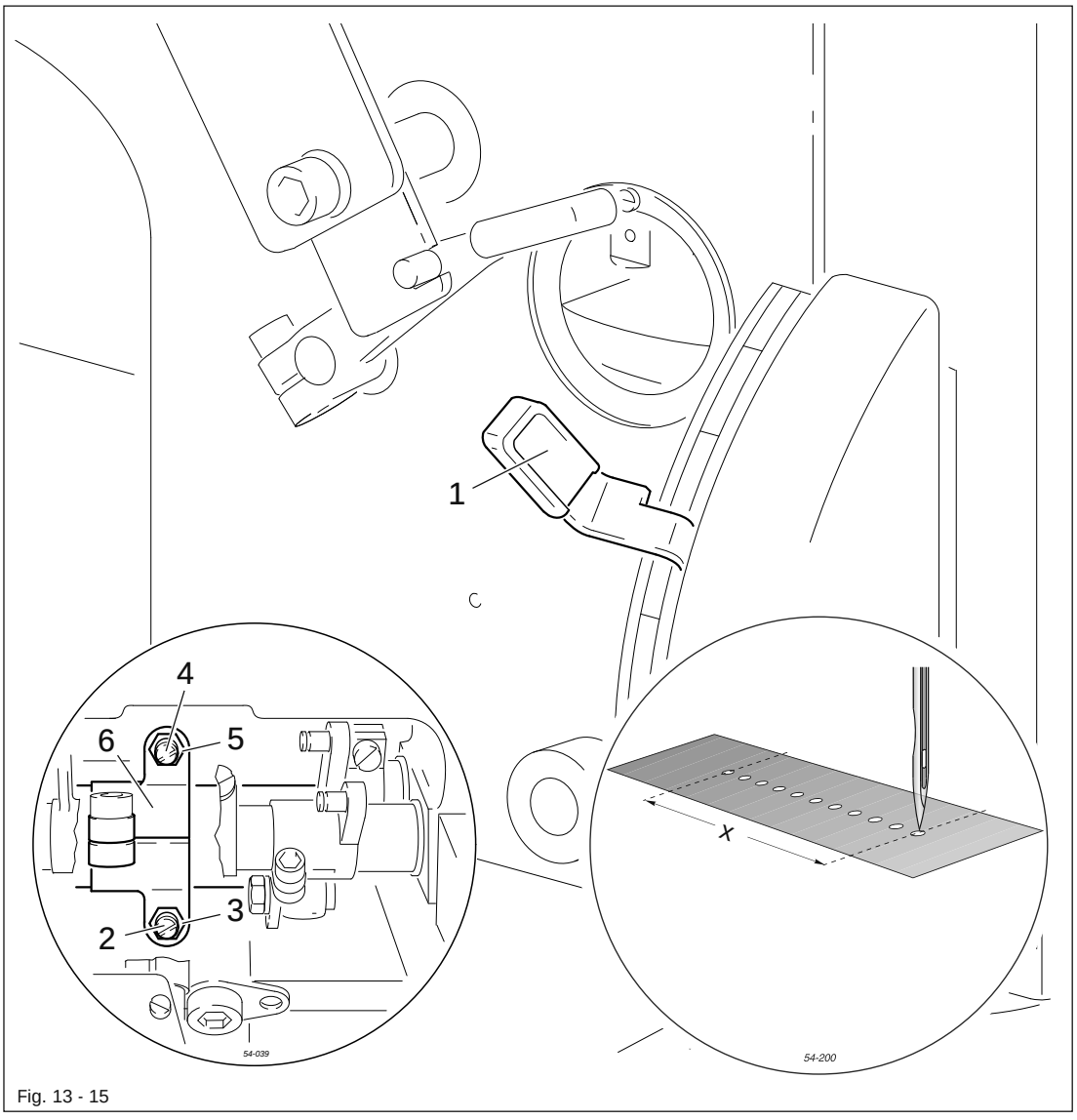

Fig. 13 - 15

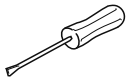

- Set the stitch length on lever 1 in accordance with requirement 1.
- Adjust screw 2 (nut 3) in accordance with requirement 1.
- Adjust screw 4 (nut 5) in accordance with requirement 2.

13.05.16 Basic setting of the differential adjustment device

Requirement
With the fullness set at "0", the stitch length at "2.0" and the adjustment gauge 3 fitted, the roller 1 should be touching pressure sleeve 4.

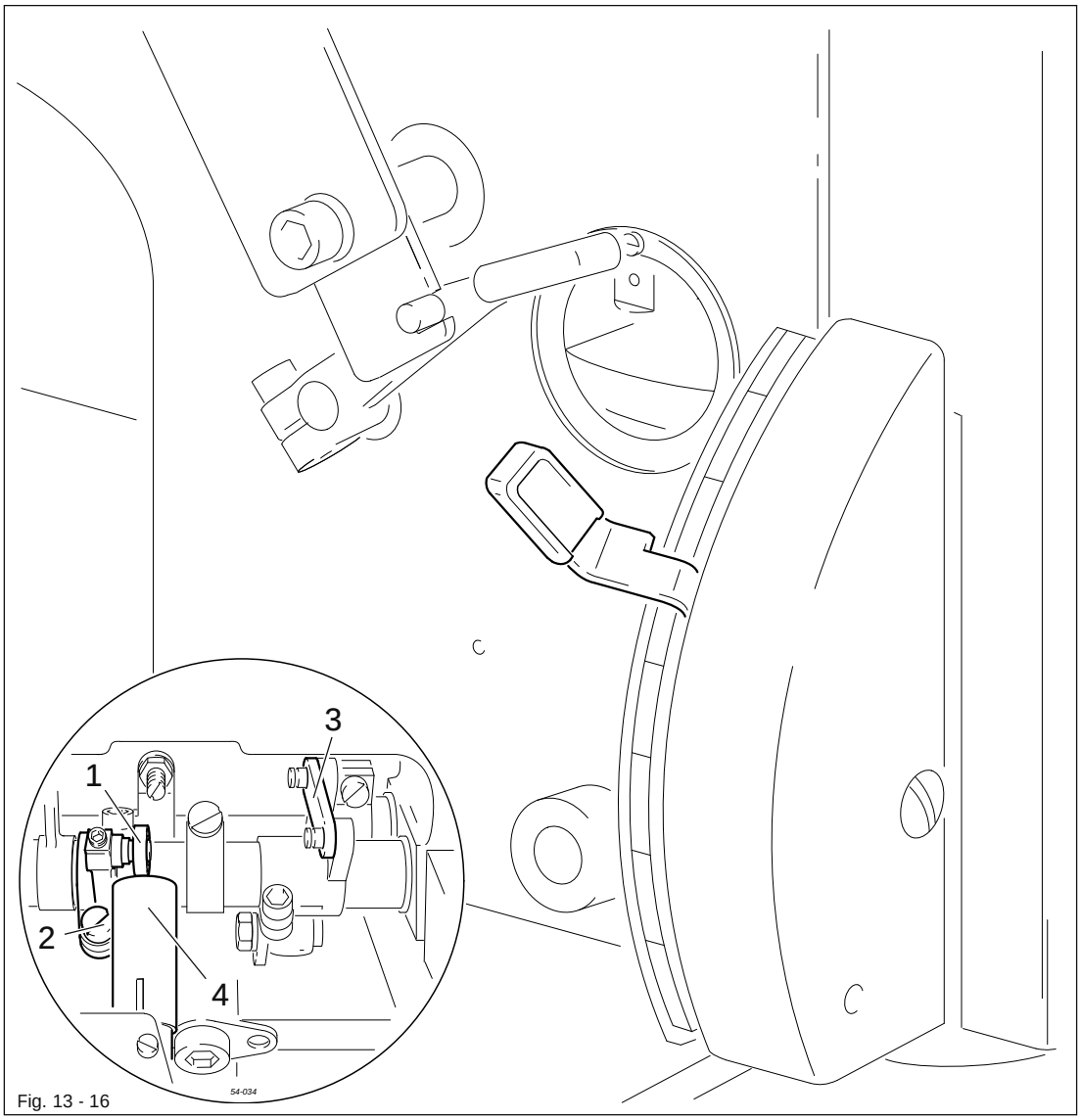

Fig. 13 - 16

- Switch on the machine.
- Set the fullness at "0".
- Adjust roller 1 (screw 2) in accordance with the requirement.

13.05.17 Looper avoiding motion

Requirement
With the needle bar at t.d.c. (hole 1) the cutout in eccentric 2 must be positioned vertically below the shaft centre line.

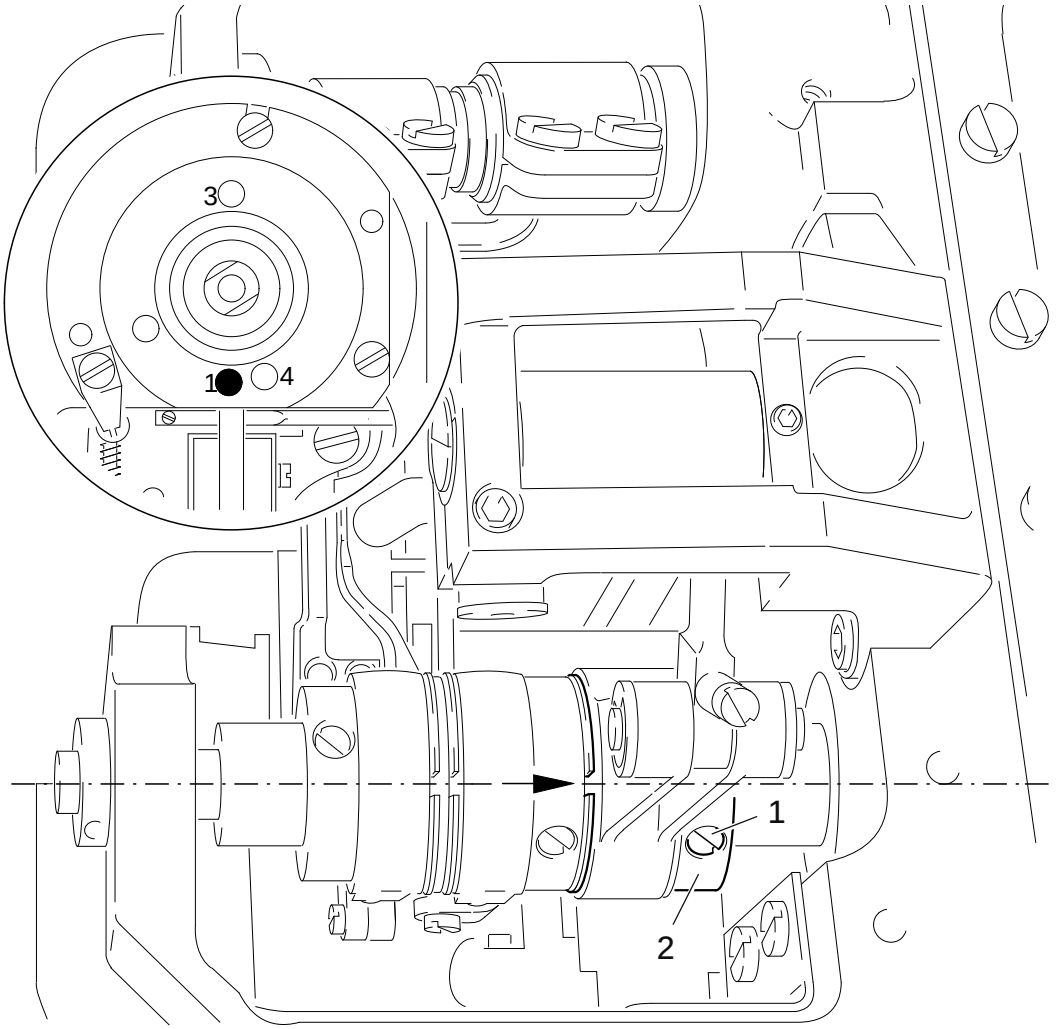

Fig. 13 - 17

- Loosen screw 1.
- Set needle bar at t.d.c.
- Turn eccentric 2 according to Requirement.
- Tighten screws 1.

13.05.18 Looper height and looper angle (for the 3801-3/07)

Requirements

When the looper carrier 2 is vertical

1. there must be a clearance of 0.7 mm between the highest point of the back of the looper and the needle plate support surface, and
2. looper 7 must touch adjustment gauge 9.

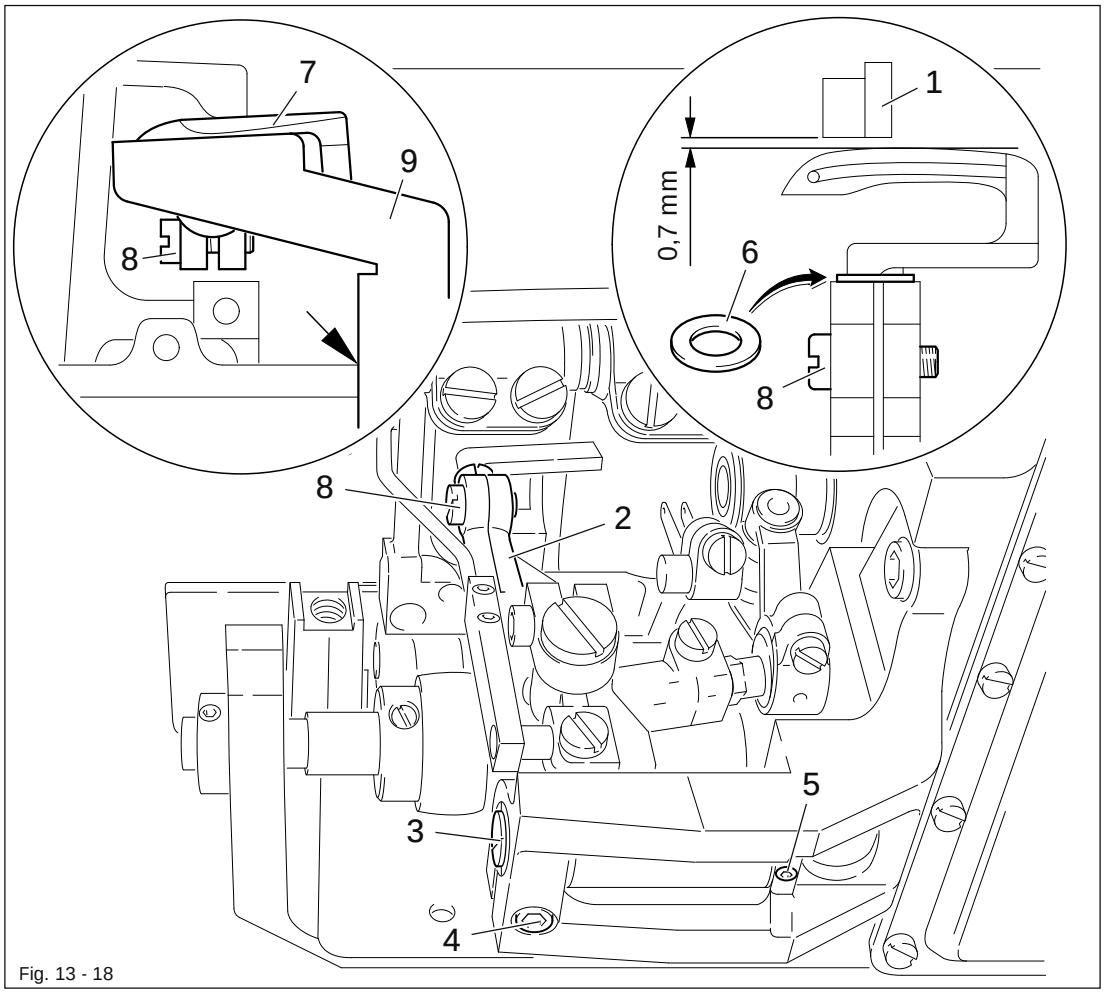

Fig. 13 - 18

- Remove needle plate and bottom feed dog.
- Lay the adjustment gauge (Part No. 61-111 642-19) onto the needle plate support.
- Position the looper carrier 2 vertically.
- Turn eccentric bearing pin 3 (screws 4 and 5) according to requirement 1.
- Check adjustment.
- If the required clearance is not achieved, replace the spacer 6. To do this, looper 7 (screw 8) must be dismounted.
- Lay looper adjustment gauge 9 (Part No. 61-111 643-06) on the left edge of the cover plate groove (see arrow) and slide against looper 7.
- Position looper 7 (screw 8) so that it touches looper adjustment gauge 9 (requirement 2).

Spacer	Part No.	Spacer	Part No.
0,3 mm	91-170693-05	0,8 mm	91-169615-05
0,5 mm	91-169614-05	1,2 mm	91-170694-05

13.05.19 Looper height and looper angle (for the 3801-3/071 and -11/071)

Requirements

When the looper carrier 1 is vertical

1. there must be a clearance of 0.3 mm between the highest point of the back of the looper and the bottom of the thread trapper 9, and
2. looper 6 must touch looper adjustment gauge 8.

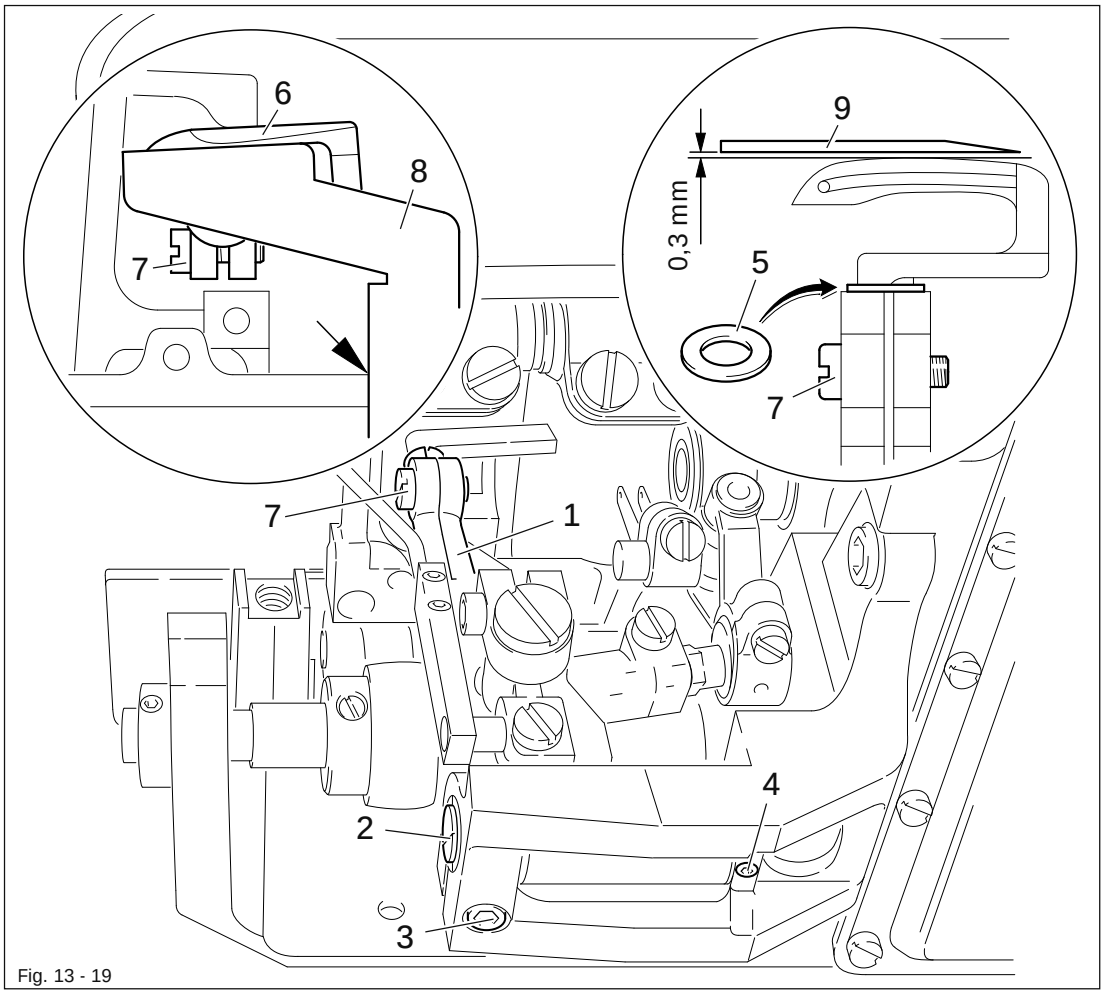

Fig. 13 - 19

- Position looper carrier 1 so that it is vertical.
- Disassemble needle plate and bottom feed dog.
- Turn eccentric bearing pin 2 (screws 3 and 4) according to requirement 1.
- Check adjustment.
- If the required clearance is not achieved, replace the spacer 5. To do this, looper 6 (screw 7) must be dismounted.
- Lay looper adjustment gauge 8 (Part No. 61-111 643-06) on the left edge of the cover plate groove (see arrow) and slide against looper 6.
- Position looper 6 (screw 7) so that it touches looper adjustment gauge 8 (requirement 2).

Spacer	Part No.	Spacer	Part No.
0,3 mm	91-170693-05	0,8 mm	91-169615-05
0,5 mm	91-169614-05	1,2 mm	91-170694-05

13.05.20 Distance of the looper from the needle (in sewing direction)

Requirement
In the sewing direction the distance of the looper point from the needle should be approx. 0.1 mm.

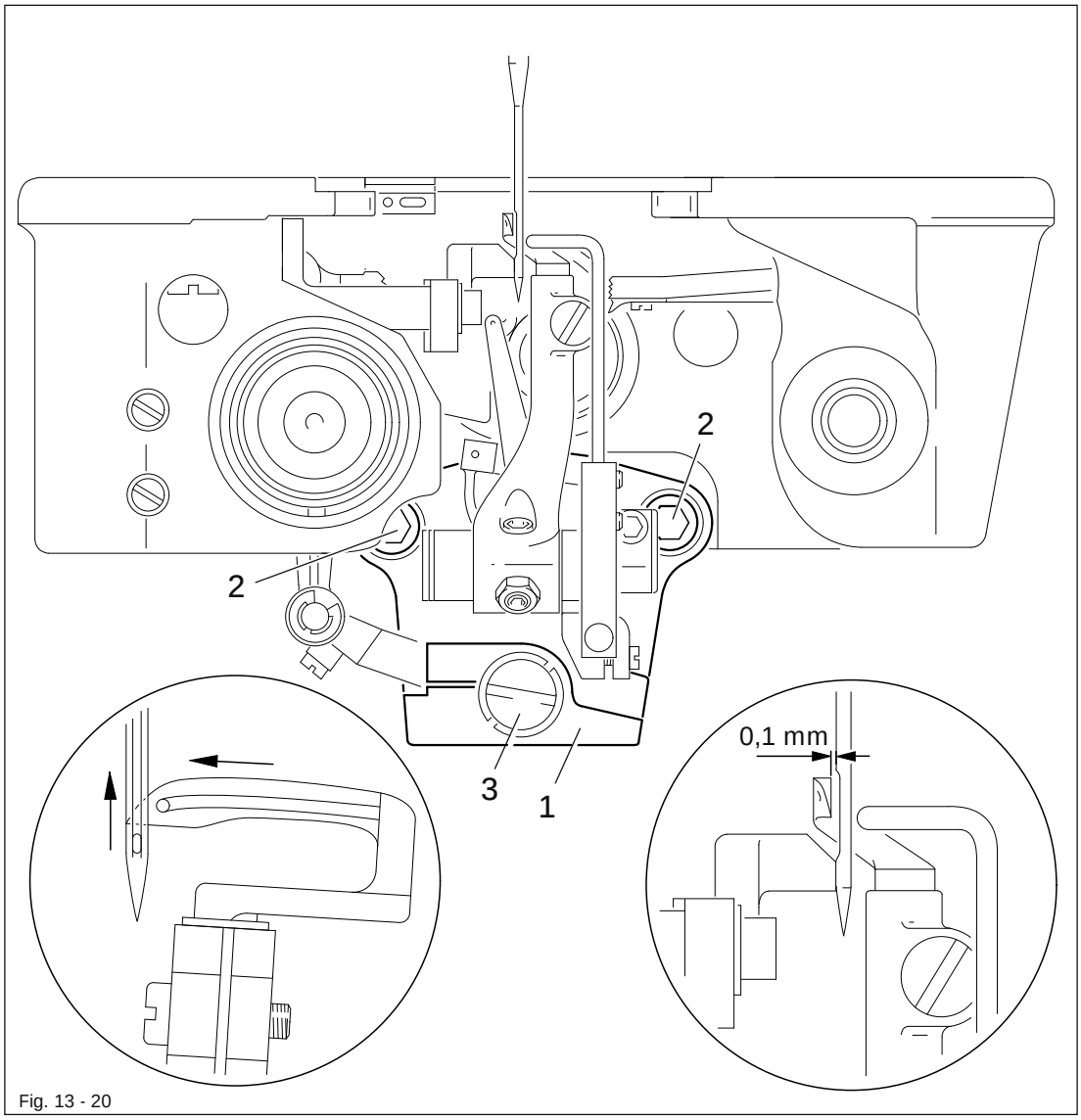

Fig. 13 - 20

- Turn the balance wheel until the looper point coming from the right has reached the left side of the needle.
- Align looper unit 1 (screws 2) in accordance with the requirement.

If it is not possible to achieve the distance of 0.1 mm, a correction can be made on the eccentric bearing pin 3.
After this adjustment the looper height and looper angle must be checked, see Chapter 13.05.18 and 13.05.19 Looper height and Looper angle.

13.05.21 Looper-to-needle clearance (crosswise to sewing direction)

Requirement
When the looper 1 is at its right point of reversal, there must be a clearance between the looper point crosswise to the sewing direction and the needle center of 3.6 mm.

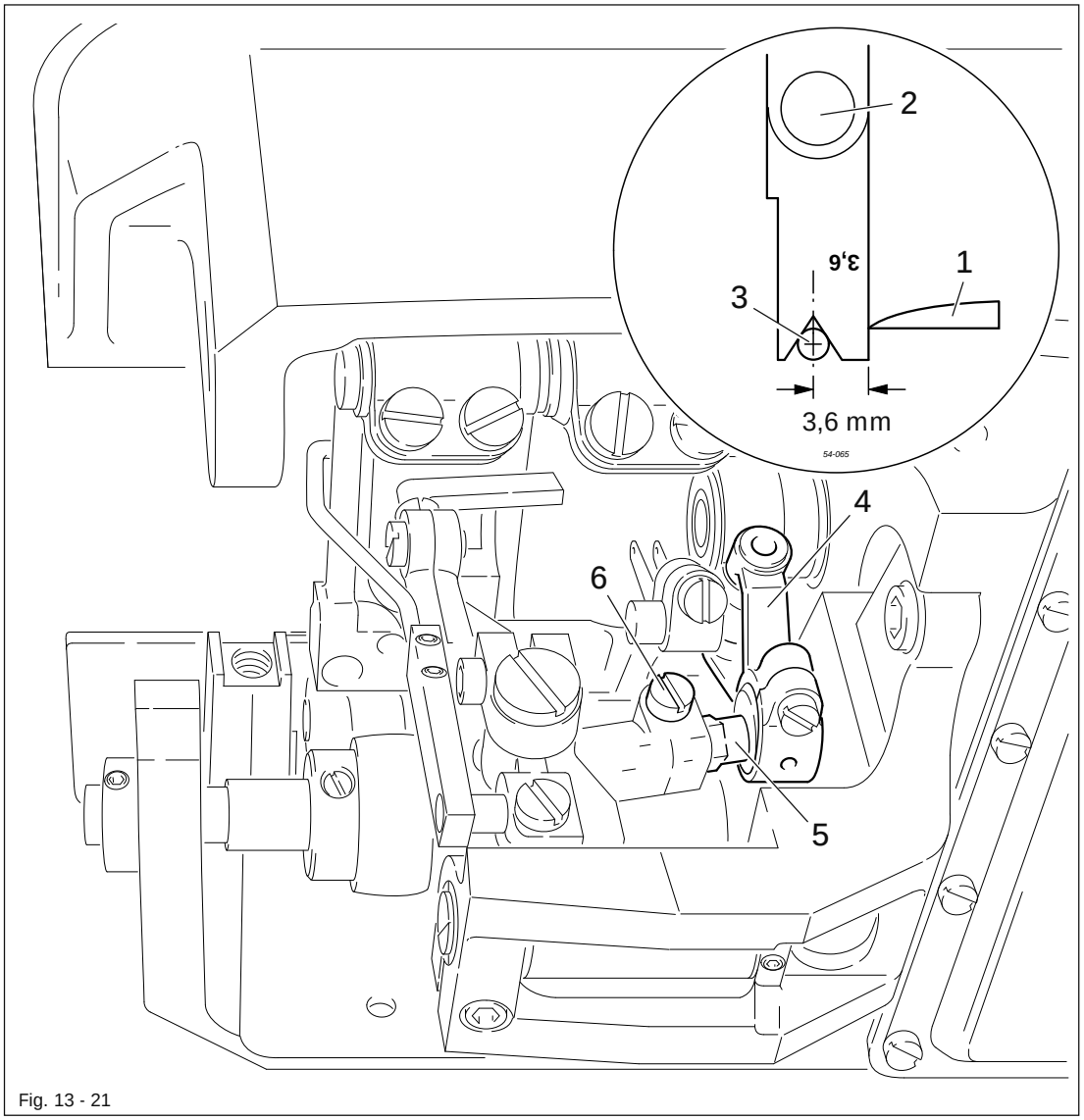

Fig. 13 - 21

- By turning the balance wheel bring the looper 1 to its right point of reversal.
- Place the "3.6" blade of looper gauge 2 (Order No. 61-111 643-06) against the needle 3 with its notch facing the direction of feed.
- Make sure that the driving link 4 is vertical and turn the ball pin 5 (screw 6) with the aid of an open-ended spanner, until the looper point 1 contacts the blade.

13.05.22 Looper motion

Requirement
The needle bar position must be the same:
a) when the point of the looper, coming from the right hand side, is positioned to the left hand side of the needle and,
b) when, after the handwheel has been turned back, the looper point is positioned a) to the right hand side of the needle.

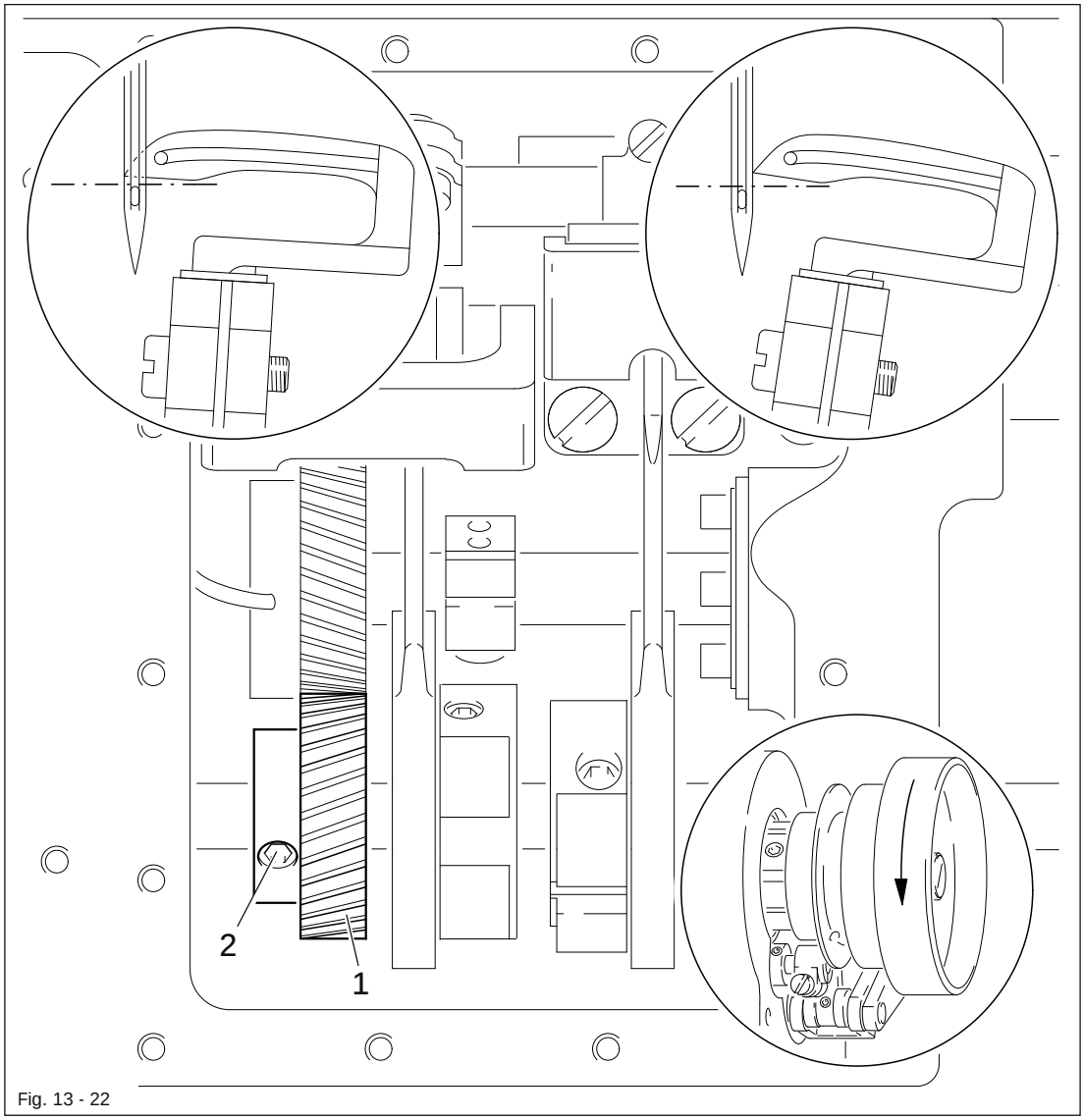

Fig. 13 - 22

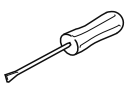

- Insert a new needle.
- Turn the handwheel until the point of the looper, coming from the right hand side, is on the left hand side of the needle.
- In this position, fasten the screw clamp (Part No. 08-880 137-00) onto the needle bar so that the upwards movement of the needle bar is blocked.
- Turn the needle bar back until the screw clamp is once again touching it.
- Check requirement.
- If necessary, remove the screw clamp and turn the cog 1 (screws 2) according to the requirement.

13.05.23 Final adjustment of the needle height

Requirement
When the point of the looper advancing from the right reaches the left side of the needle, the top edge of the needle eye must be 1.0 - 1.2 mm below the bottom edge of the looper.

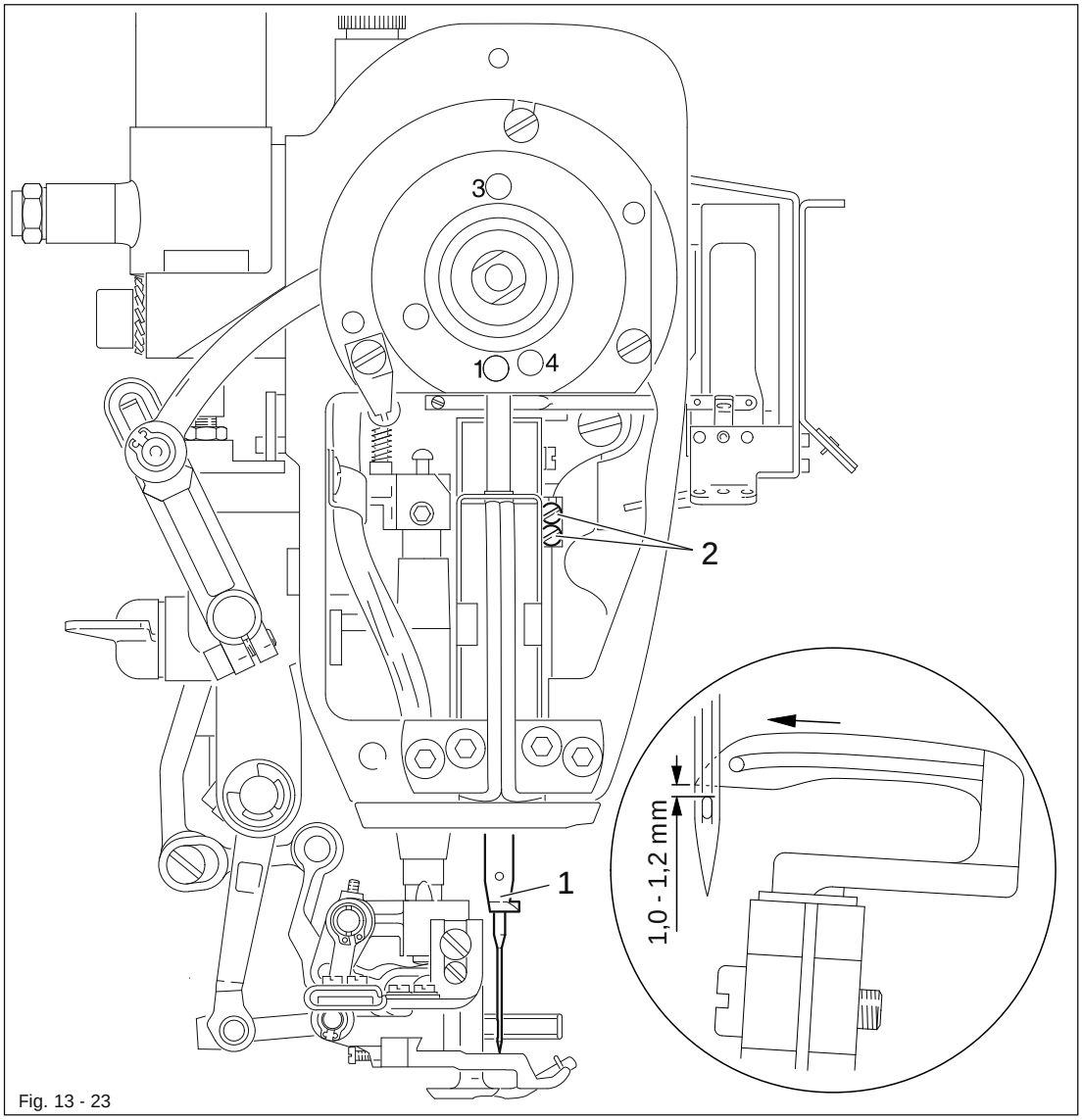

Fig. 13 - 23

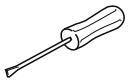

- Turn the handwheel until the point of the looper, coming from the right hand side, reaches the left hand side of the needle.
- Move the needle bar 1 (screws 2) without turning it according to the requirement.
- Check the distance of the looper from the needle in the direction of sewing in accordance with Chapter 13.05.20 Distance of the looper from the needle in sewing direction, and adjust if necessary.

13.05.24 Height of rear needle guard

Requirement
When the needle bar is at bottom dead center (pin in hole 3), the vertical surface of the needle guard 1 must cover about 2/3 of the needle eye.

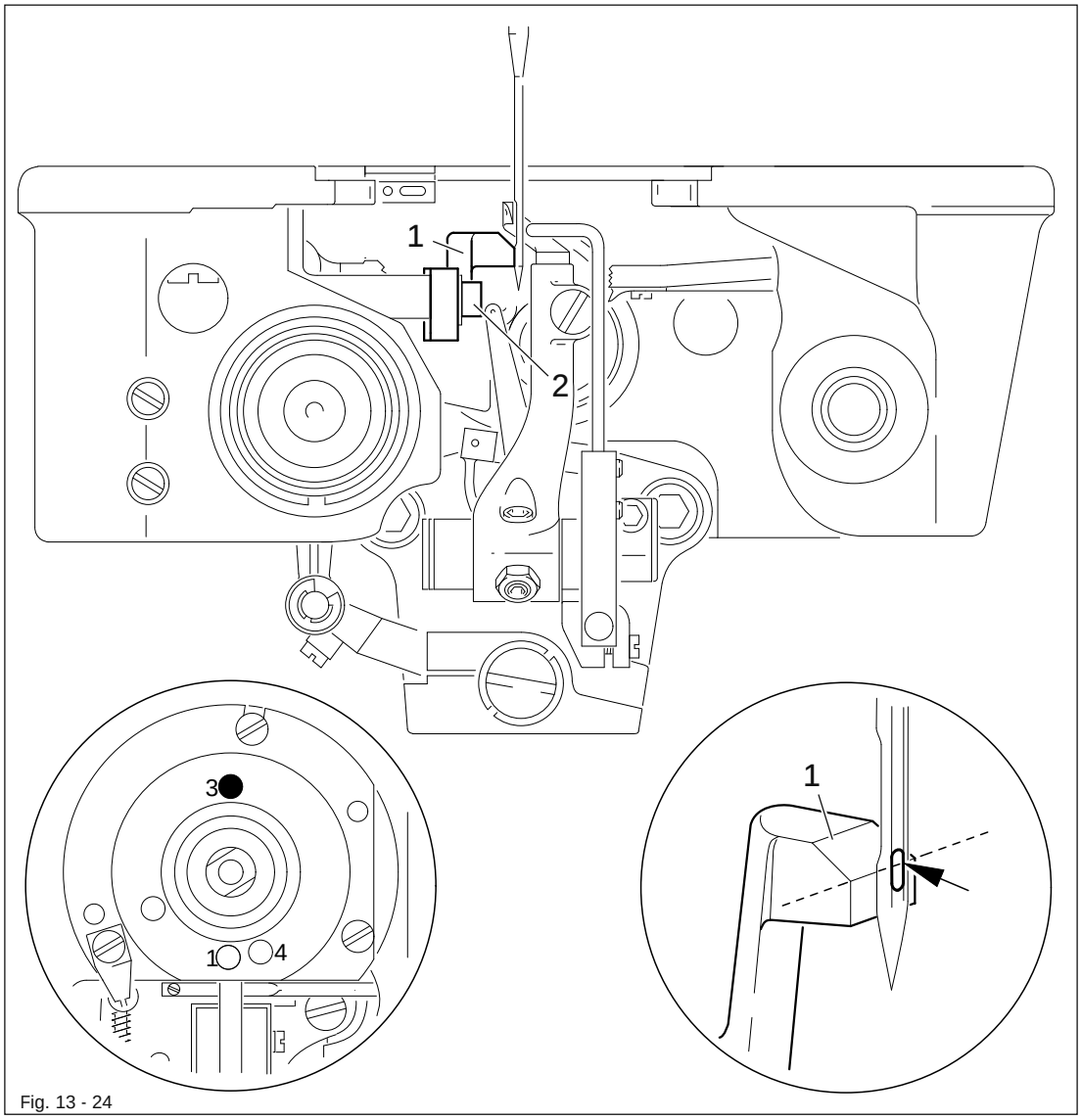

Fig. 13 - 24

- Bring the needle bar to BDC.
- Adjust needle guard 1 (screw 2) according to the requirement.

13.05.25 Clearance between the rear needle guard and the needle

Requirement
When the point of the looper, coming from the right hand side, has reached the right hand side of the needle, the needle guard 3 must still be slightly touching the needle.

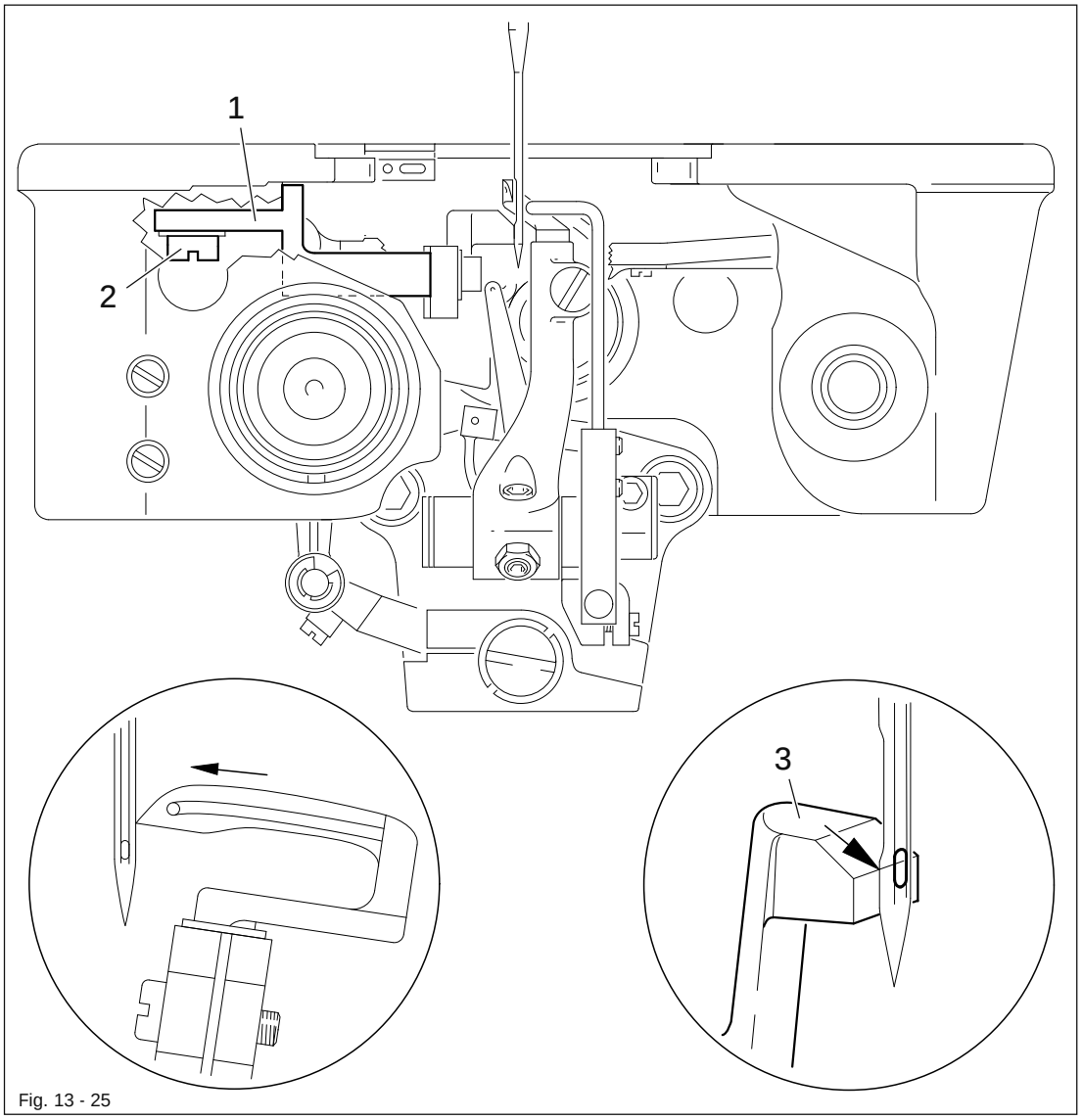

Fig. 13 - 25

- Turn the handwheel until the point of the looper has reached the right hand side of the needle.
- Move the carrier 1 (screw 2) according to the requirement.

The needle guard 3 must not press against the needle!

13.05.26 The looper-eccentric guard

Requirement
The eccentric must not at any stage of its motion touch the guard 1.

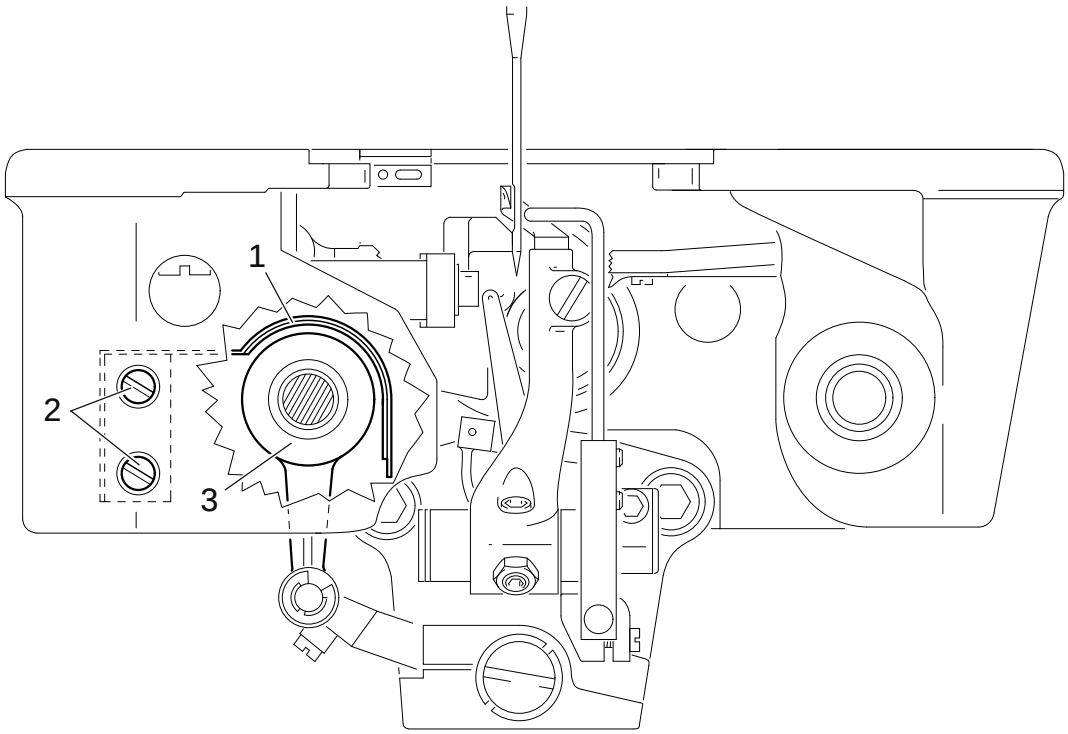

Fig. 13 - 26

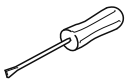

- Align the guard 1 (screws 2 which can be reached through the holes) in accordance with the requirement.

13.05.27 Position of the front needle guard

Requirement
When the point of the looper 1, coming from the right hand side, is positioned at the middle of the needle, the needle guard finger 4
1. must have a lateral clearance of 0.3 - 0.5 mm to the needle,
2. must be parallel to the looper blade and
3. must have its upper edge positioned at the same height as the point of the looper 1.

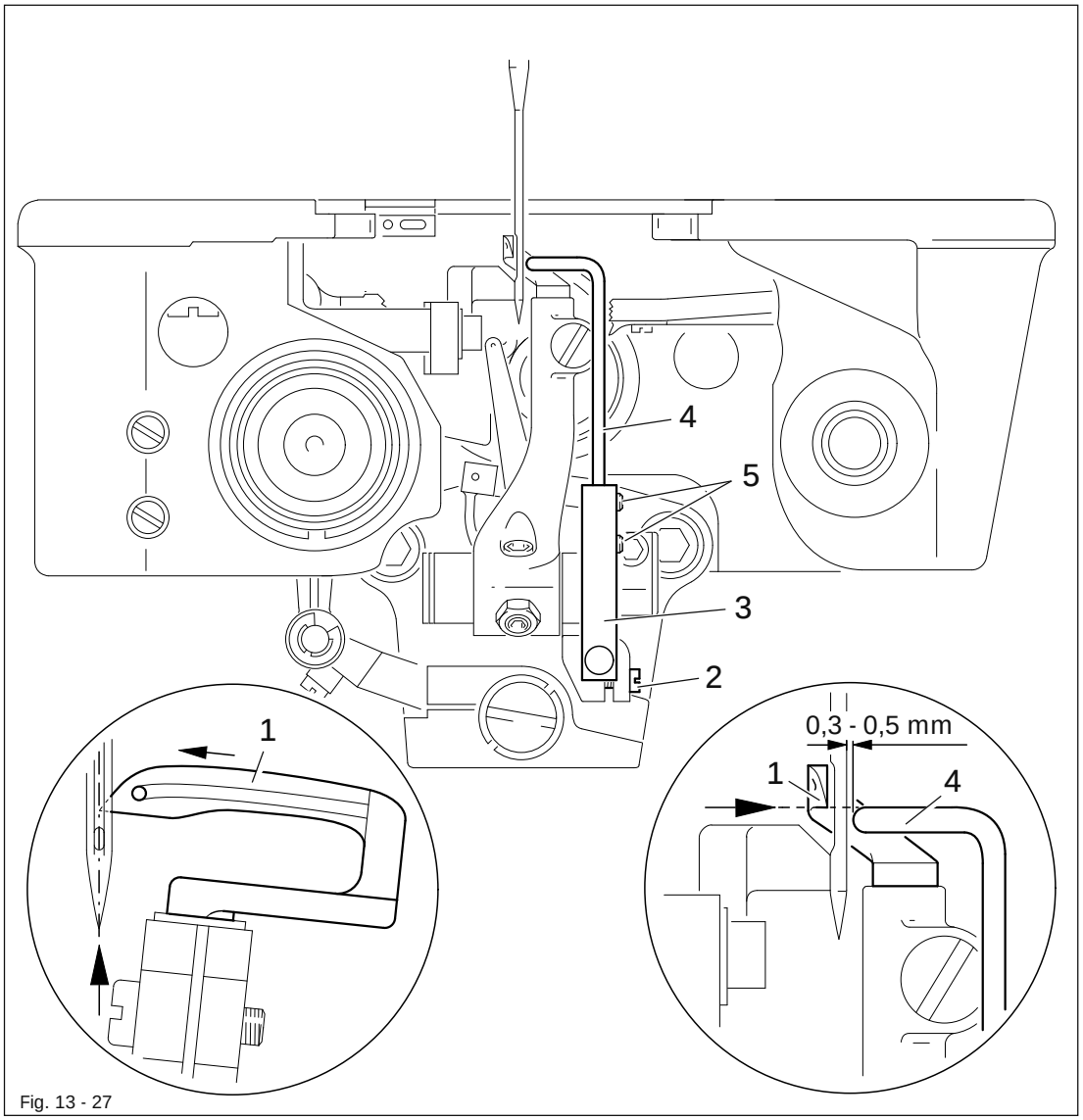

Fig. 13 - 27

- Turn the handwheel until looper 1 is at its left reversal point.
- Loosen screws 2.
- Move needle guard carrier 3 so that in this position the needle guard finger 4 does not press against looper 1.
- Turn screws 2 slightly.
- Turn the handwheel until the point of the looper 1, coming from the right hand side, has reached the middle of the needle.
- Turn needle guard carrier 3 according to requirement 1.
- Align needle guard finger 4 (screws 5) according to requirement 2 and 3.

13.05.28 Needle thread puller

Requirement

1. When the needle bar is at its BDC (hole 3), the clearance between the needle thread puller 2 and needle bar frame 3 must be approx. 0.3 mm.
2. The needle thread puller 2 must be able to move freely in the middle of the face slot and not strike against anything at its top and bottom reversal points.

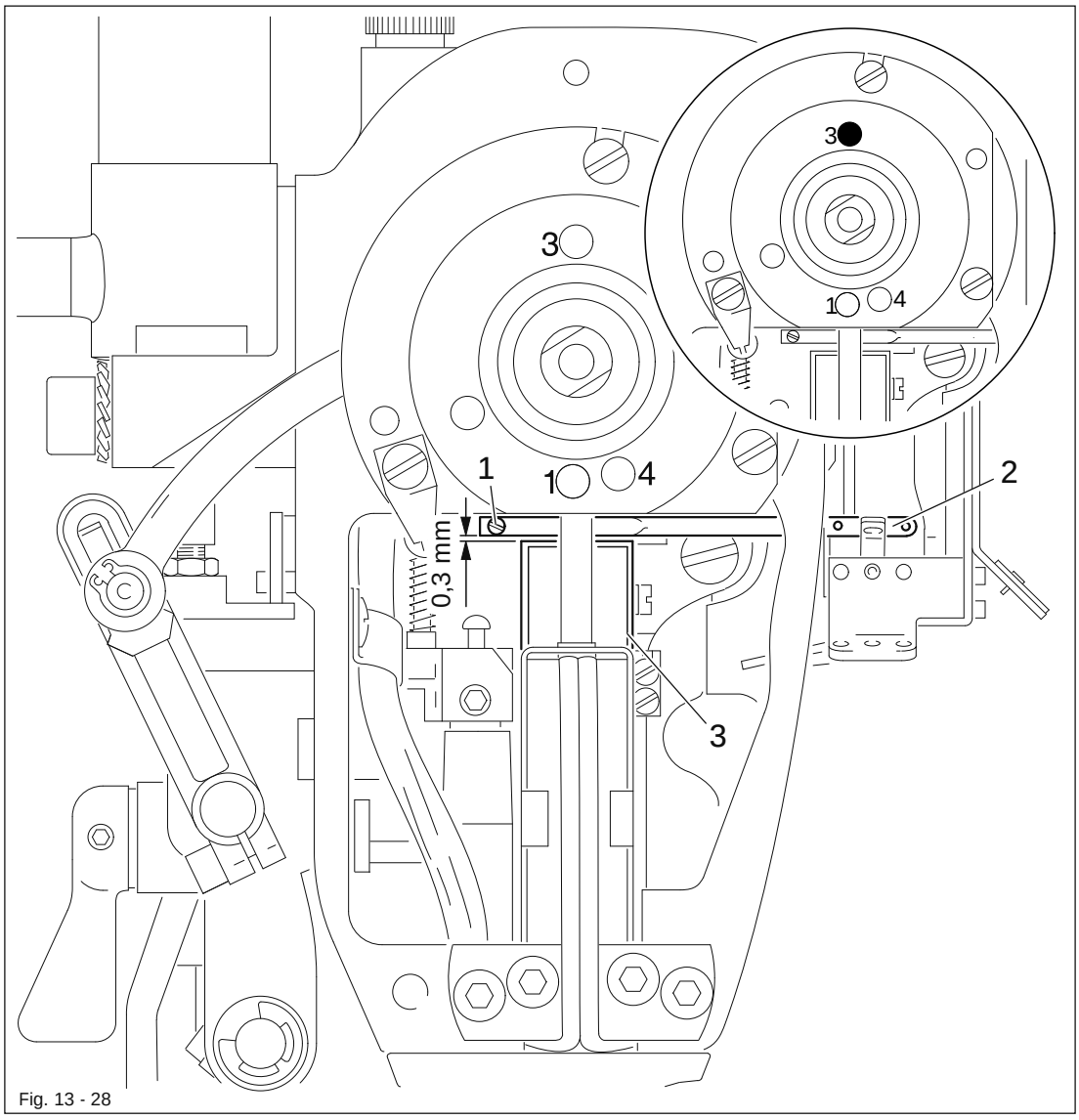

Fig. 13 - 28

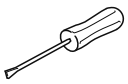

- Turn handwheel until screw 1 is easily accessible and loosen screw slightly.
- Move the needle bar to its BDC.
- Move needle thread puller 2 according to requirement 1.
- Tighten screw 1 according to requirement 2.

13.05.29 Basic setting of the needle thread regulator and the thread guide

Requirement

1. With the needle bar at its BDC (hole 3), the eye of the needle thread regulator 1 must be at the same height as the hole in the needle thread puller 4.
2. The thread guide 2 must be vertical and fastened in the middle of the elongated hole.

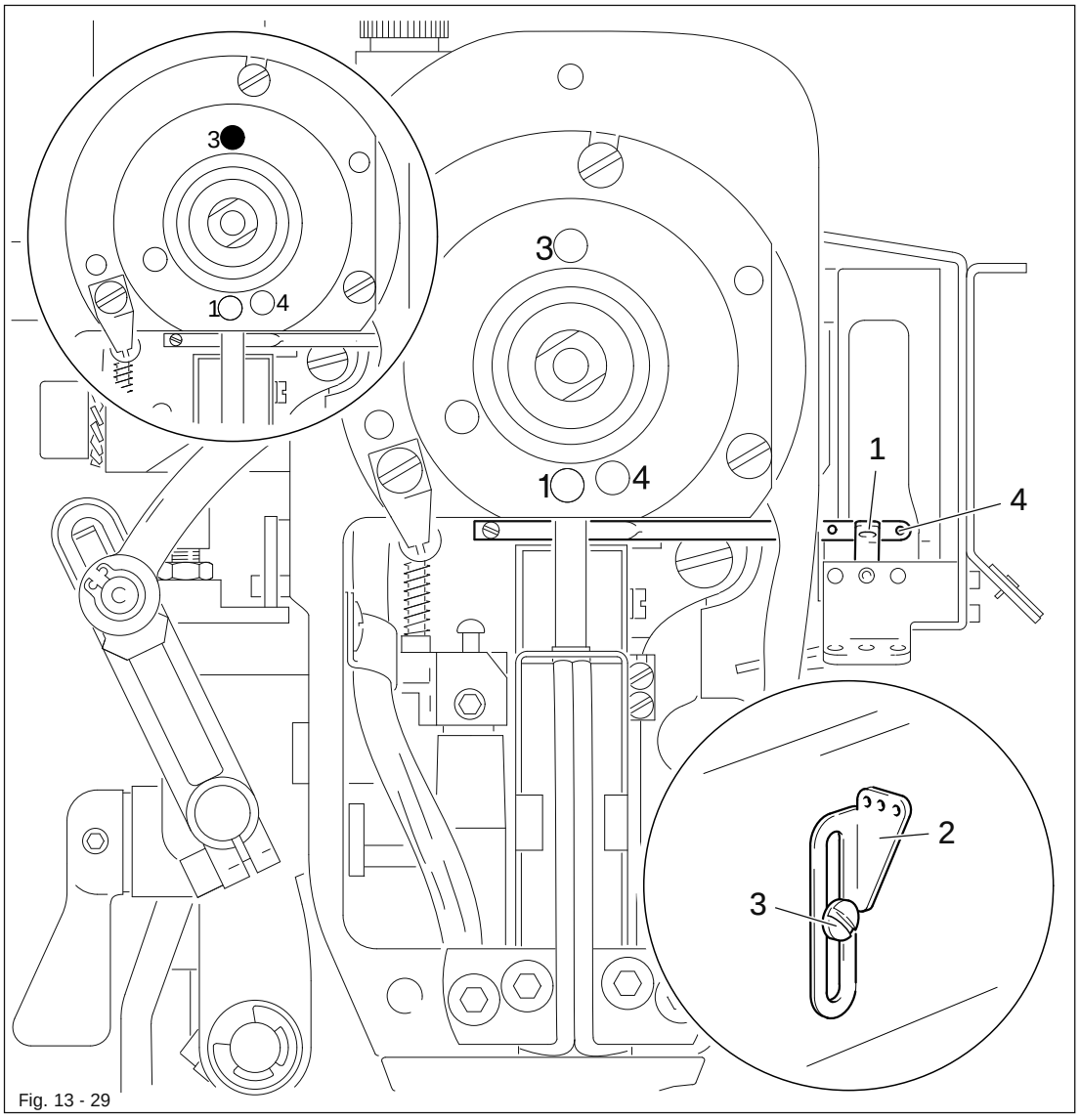

Fig. 13 - 29

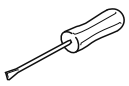

- Bring the needle bar to its BDC.
- After you have loosened the screw, move the needle thread regulator 1 according to requirement 1.
- Tighten the screw of the needle thread regulator.
- Align the thread guide 2 (screw 3) according to requirement 2.



Depending on the workpiece and the type of thread, it may be necessary to deviate from the basic setting.

13.05.30 Looper thread regulators

Requirement

1. The front edge of the thread regulator 1 must be at a distance of 29 mm to the needle plate cutout, and be centered with respect to the fork of the looper thread puller 5.
2. The front edges of thread regulators 3 and 1 must be at a distance of 8 mm to each other.

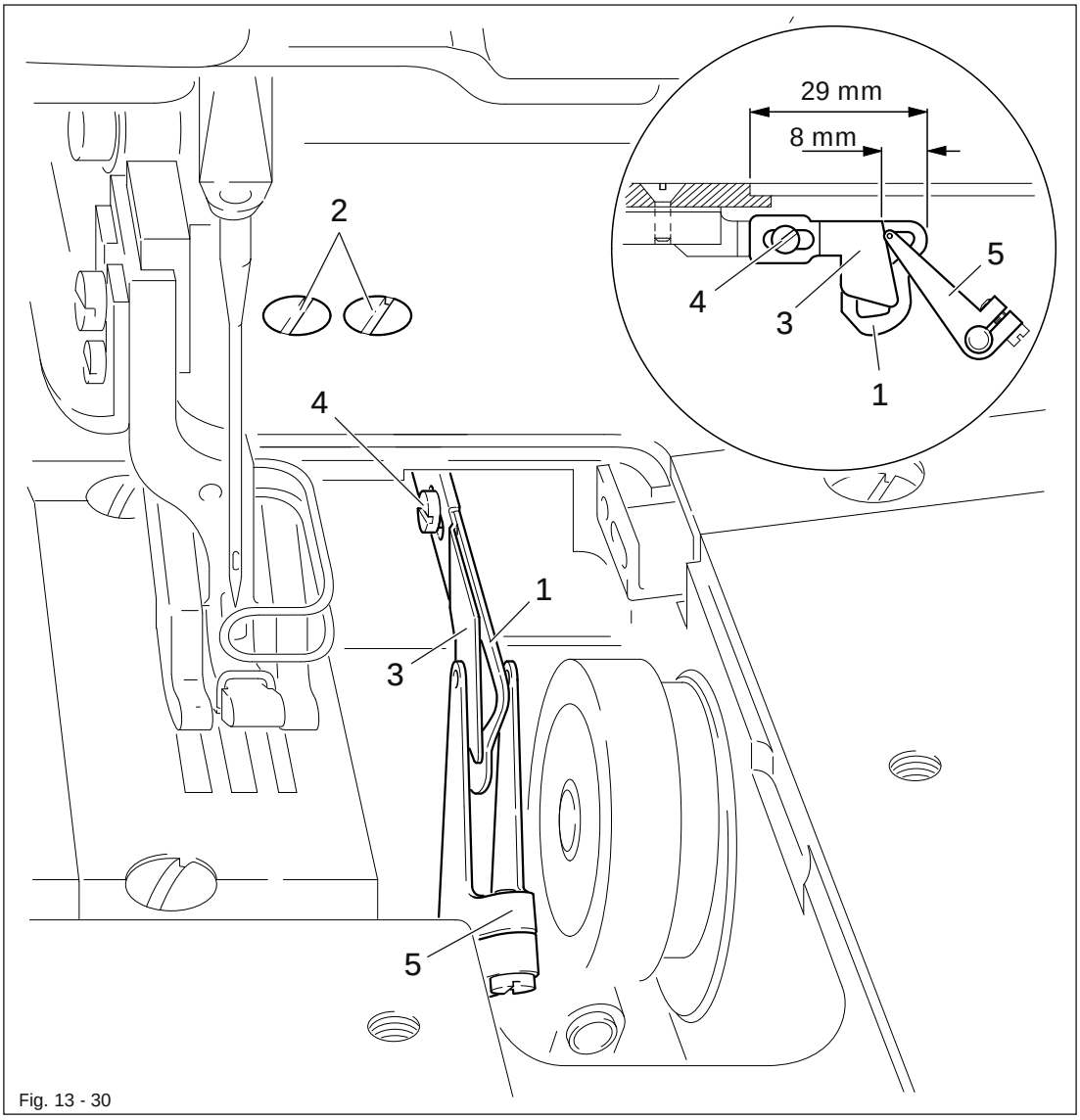

Fig. 13 - 30

- Move thread regulator 1 (screws 2) according to requirement 1.
- Move thread regulator 3 (screw 4) according to requirement 2.

Depending on the workpiece and the type of thread, it may be necessary to deviate from the basic setting.

13.05.31 Looper thread puller

Requirement
With the needle bar at its TDC (hole 1), both eyes of the looper thread puller 1 must be positioned at the front edge of the thread regulator 4.

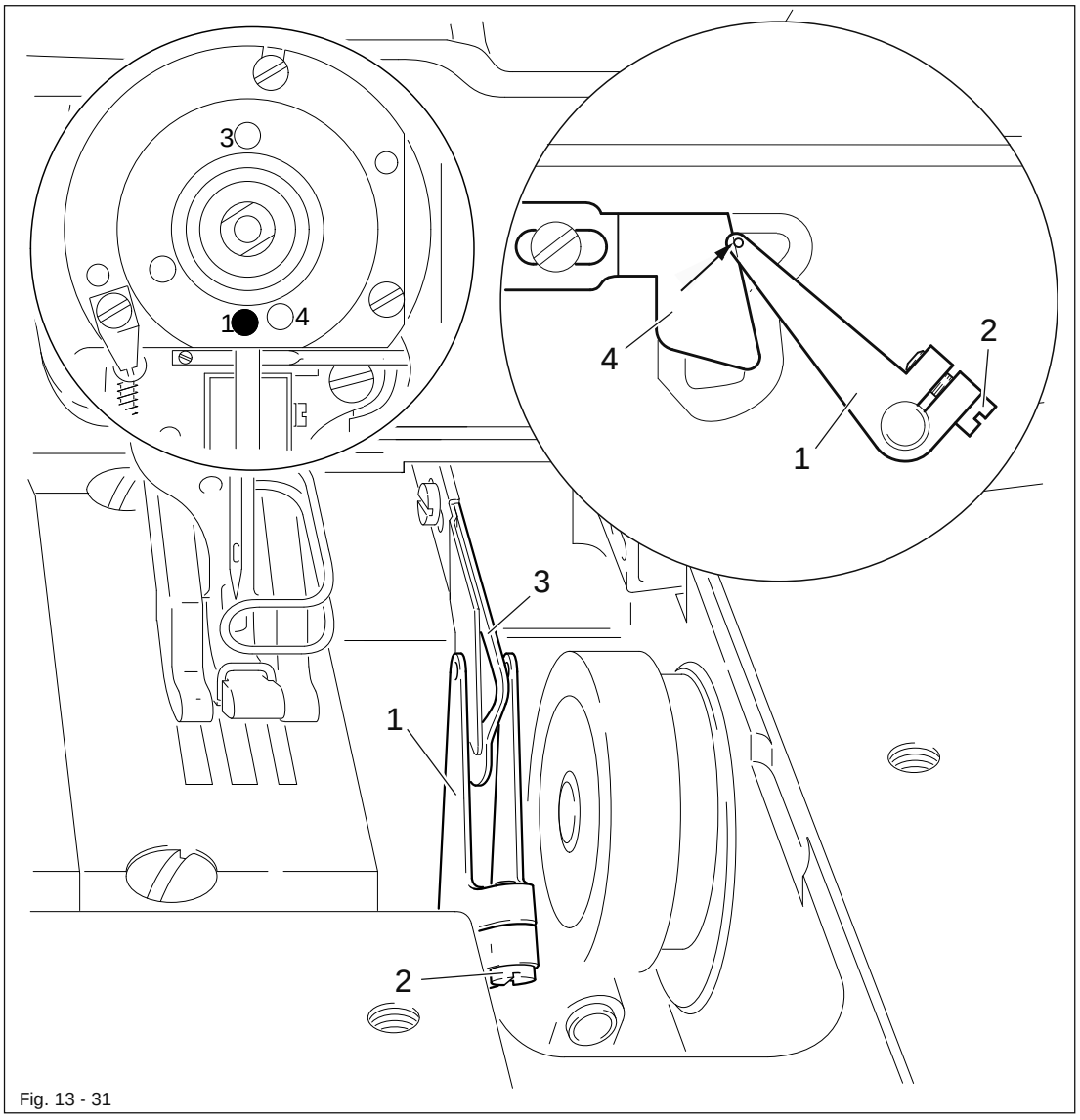

Fig. 13 - 31

- Bring the needle bar to its TDC.
- Turn looper thread puller 1 (screw 2) according to the requirement. In doing so, make sure that the fork of the looper thread puller 1 is centered with respect to the thread regulator 3.

Depending on the workpiece and the type of thread, it may be necessary to deviate from the basic setting.

13.05.32 Top feed and presser foot pressure

Requirement
The pressure exerted by the top feed and the presser foot must be adjusted so that the workpiece is transported optimally at any sewing speed.

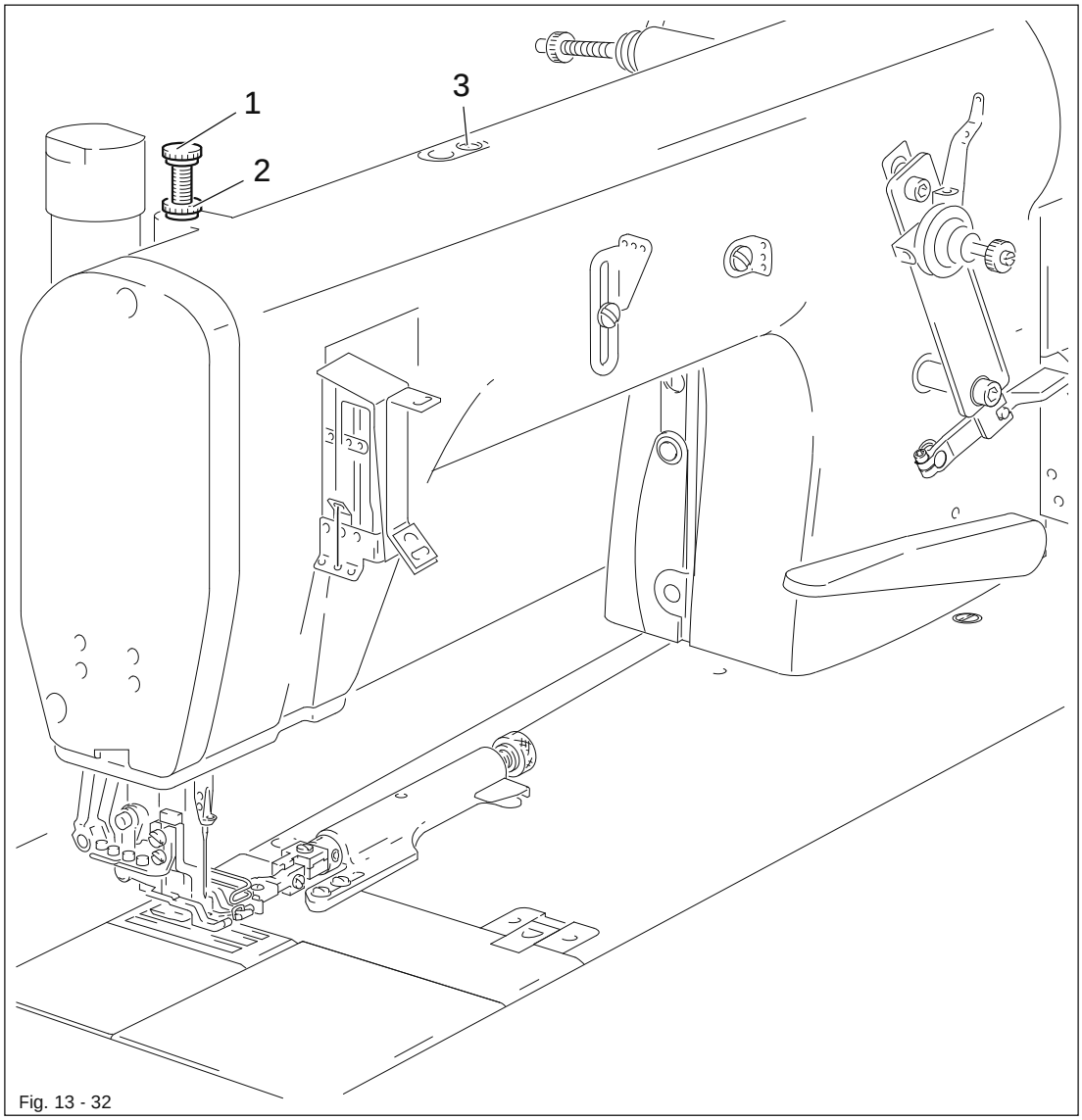

Fig. 13 - 32

- Adjust presser foot pressure according to the requirement with screw 1 (nut 2).
- Adjust top feed pressure according to requirement with screw 3.

13.06 Adjusting the thread trimmer

Only on the PFAFF 3801-3/071 and -11/071.

13.06.01 Preadjusting the thread catcher

Requirement

1. The point of the thread catcher 4 must be at a distance of 32.5 - 33 mm to the front edge of the mounting plate 1.
2. The guides 5 must be parallel to the mounting plate 1.
3. The thread catcher 4 must move freely and with minimal play.

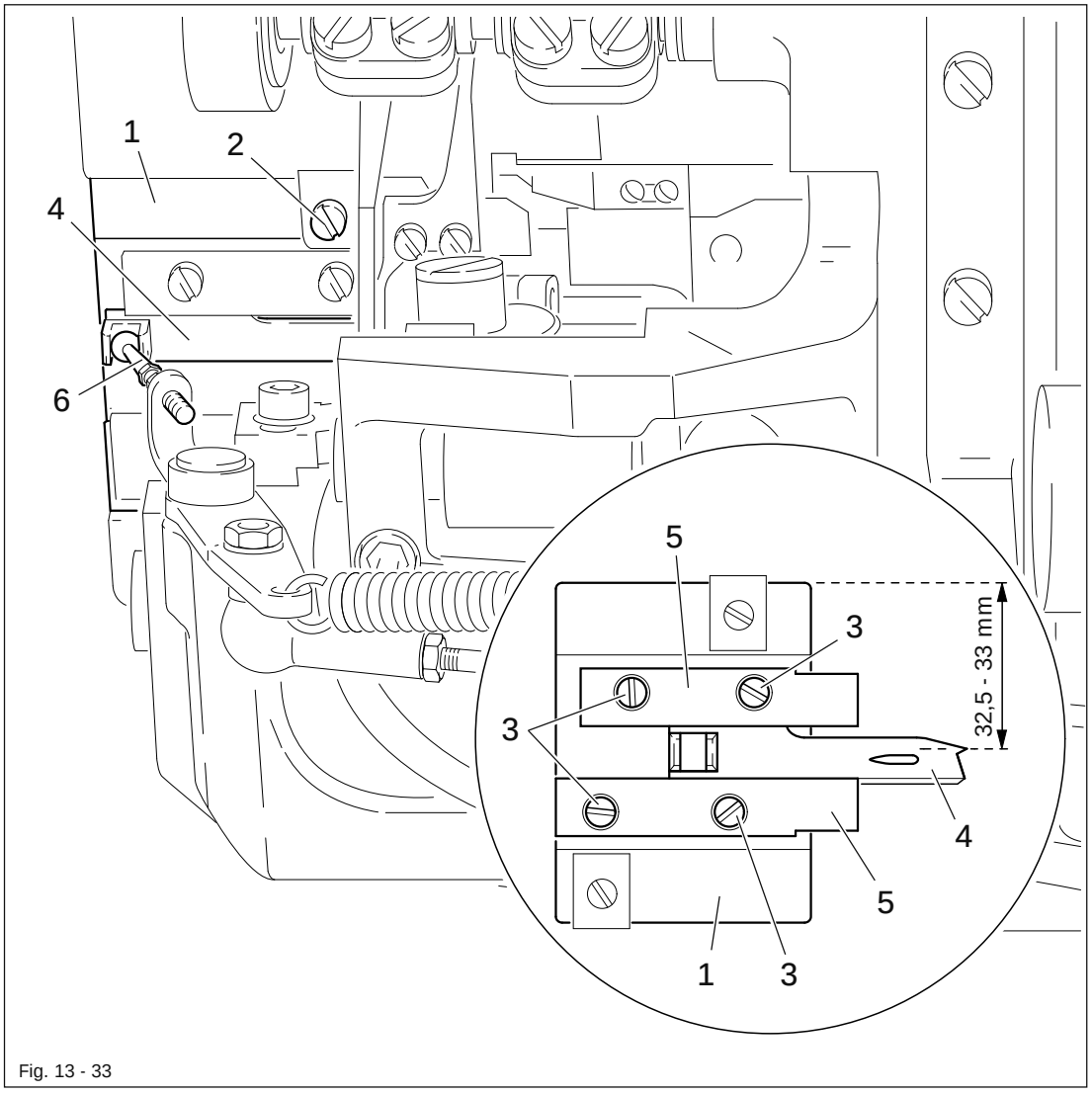

Fig. 13 - 33

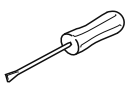

- Remove mounting plate 1 (screws 2).
- Loosen screws 3.
- Move thread catcher 4 according to requirement 1.
- Align guides 5 according to requirements 2 and 3, and tighten screws 3.
- Screw on mounting plate 1, ensuring that the ball pin 6 engages in the drive dog of the thread catcher 4.

13.06.02 Ball pin position

Requirement

When it is positioned vertically, the ball pin 1 must

1. be centered with respect to the drive dog 5, and
2. have a distance of 0.5 mm to the bottom of the drive dog 5.

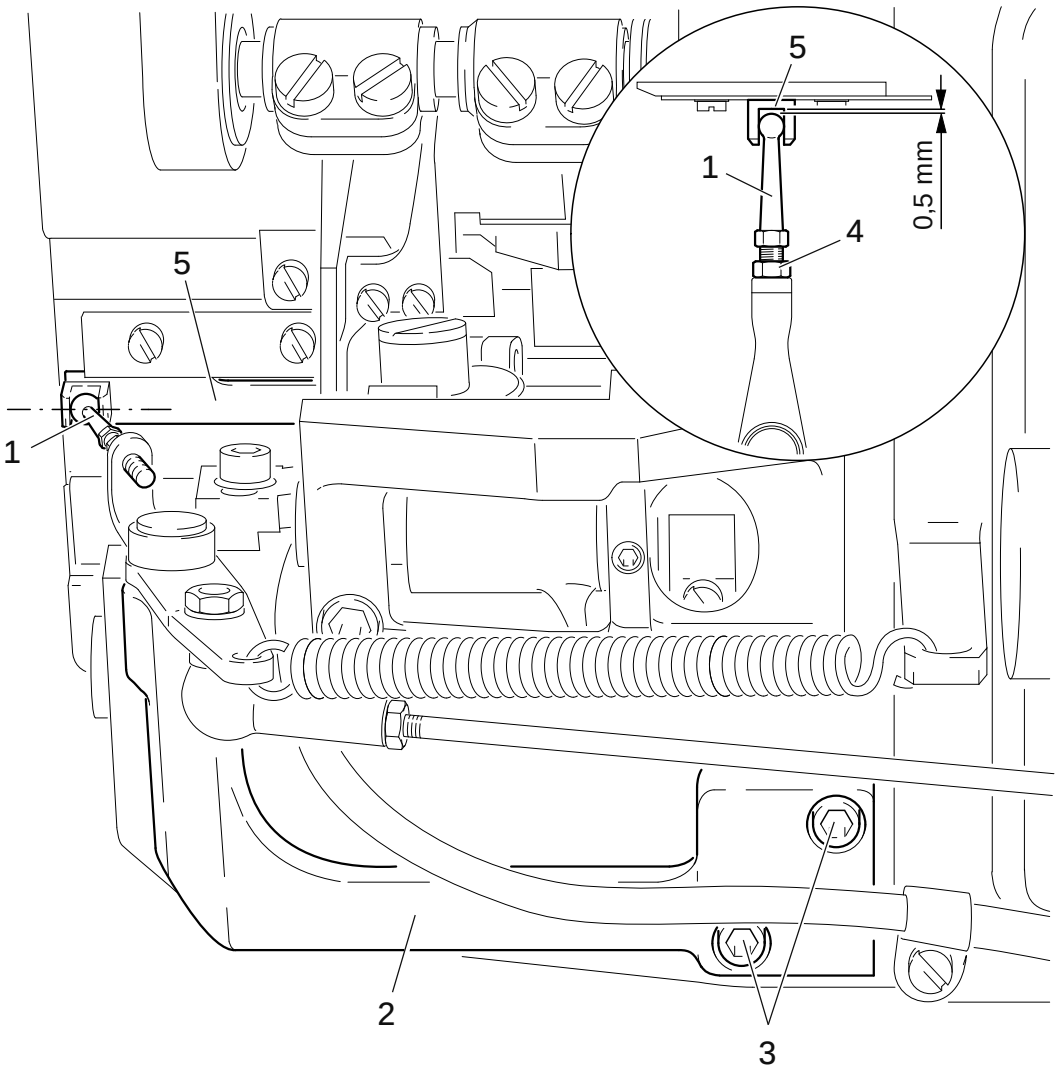

Fig. 13 - 34

- Position the ball pin 1 vertically.
- Move carrier 2 (screws 3) according to requirement 1.
- Turn ball pin 1 (nut 4) according to requirement 2.

13.06.03 Thread catcher position with respect to needle

Requirement
With the thread trimmer in its resting position, the point of the thread catcher 4 must be at a distance of 7 mm to the center of the needle.

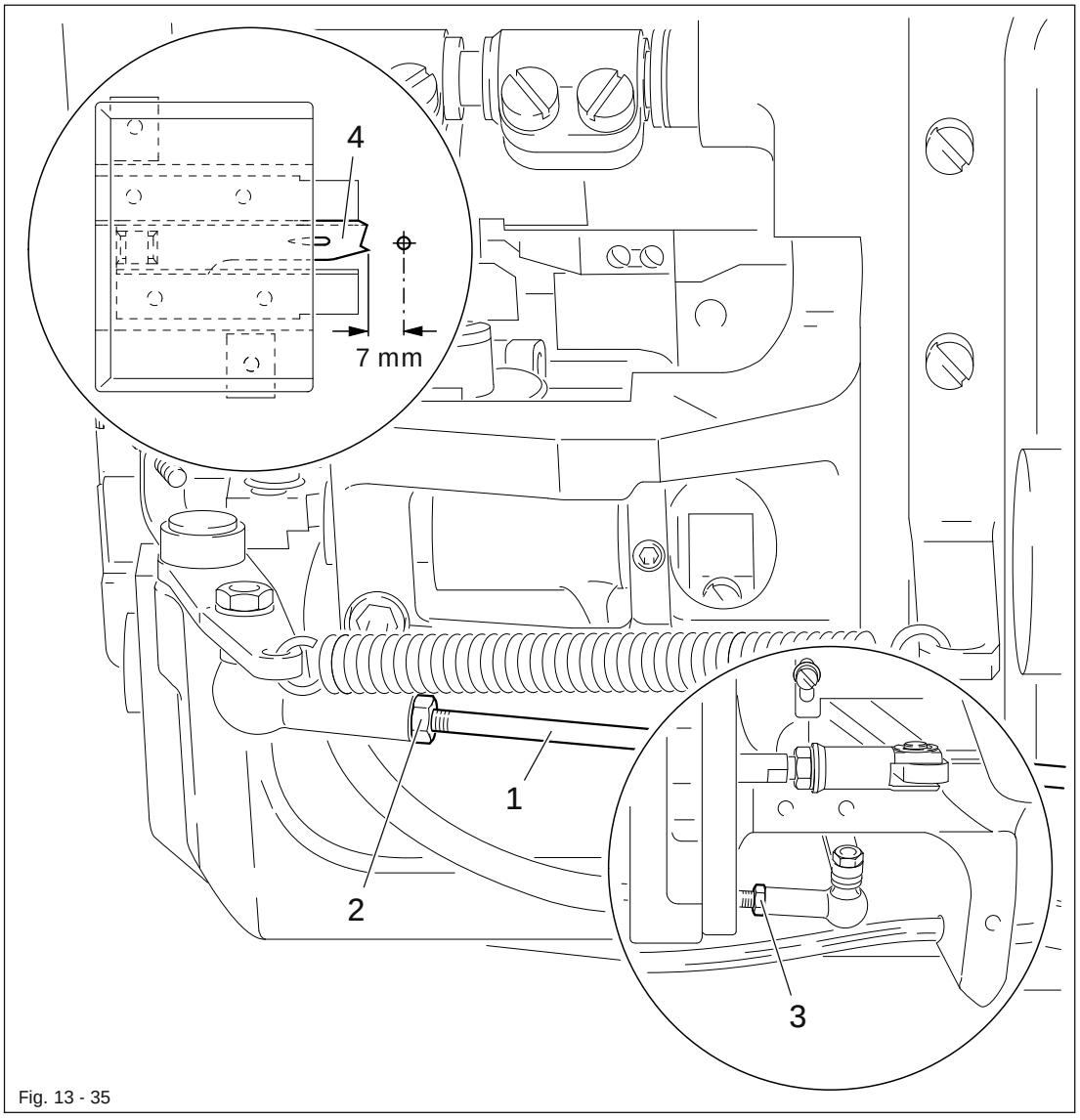

Fig. 13 - 35

- Bring the thread trimmer into its resting position.
- Turn connecting rod 1 (nut 2, nut 3 with left-hand thread) according to the requirement.

13.06.04 Thread catcher guard

Requirement

1. When the thread trimmer is in the cutting position, the guide roller 3 must be centered in the recess of the guard cam 2.
2. When the thread trimmer is in the basic position, there must be a distance of 0.5 - 1 mm between the guard cam 2 and the guide roller 3.

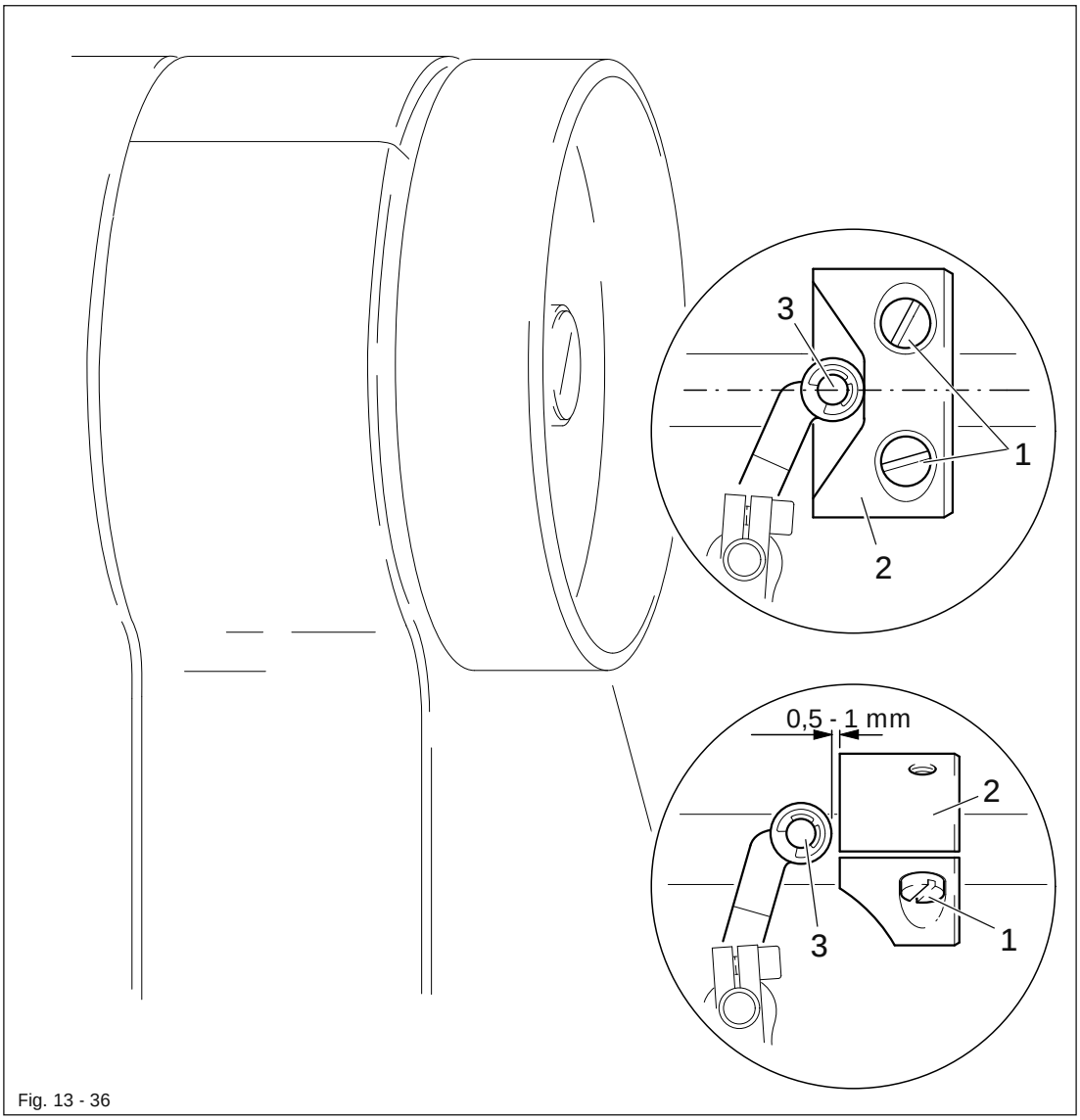

Fig. 13 - 36

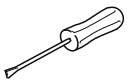

- Loosen screws 1 so that the interlocking cam can be turned on its shaft with resistance.
- Bring the needle bar to TDC.
- In this position turn the interlocking cam 2 according to requirement 1.
- Bring the thread-trimming device to its neutral position and the needle bar to BDC.
- Adjust interlocking cam 2 according to requirement 2 and tighten screws 1.

13.06.05 Tension release

Requirement
When the cylinder is fully actuated, there must be a distance of approx. 0.5 mm between the upper edge of the elongated hole in plate 1 and the guide studs 3.

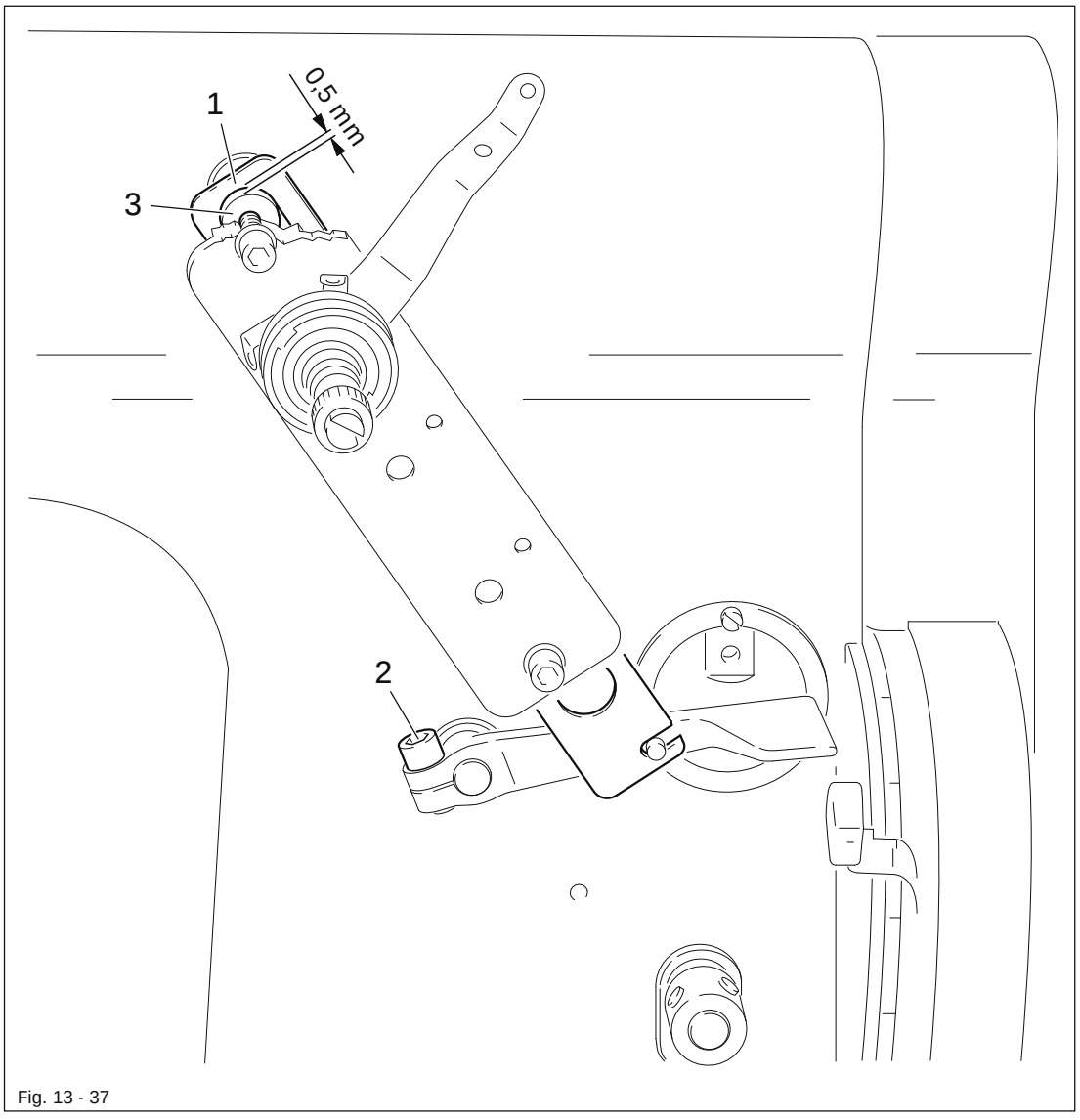

Fig. 13 - 37

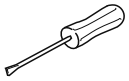

- Fully extend thread trimmer cylinder.
- Move plate 1 (screw 2) according to the requirement.

13.06.06 Trimmer test

Requirement

1. The point of the thread catcher 2 must securely take hold of the looper thread and the back part of the needle thread loop.
2. The threads must not be damaged when the cover plate 1 is removed.
3. When the cover plate 1 is mounted, the thread catcher 2 must enter between the knife 3 and the thread clamp spring 5; in the process, the threads must be perfectly cut and trapped.

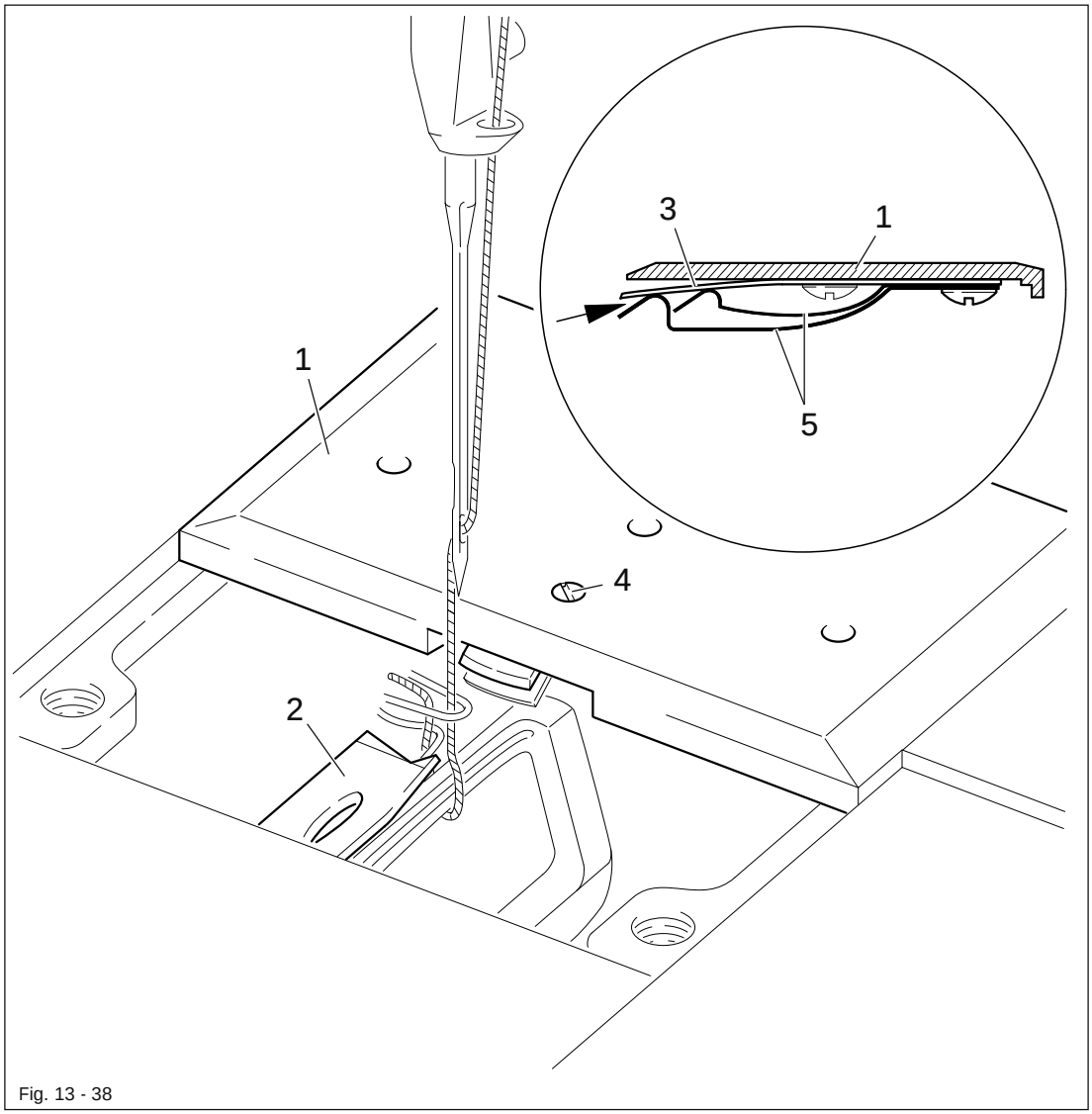

Fig. 13 - 38

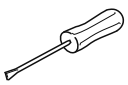

- Lay material under presser foot and sew a few stitches.
- Remove cover plate 1.
- Set needle position according to chapter 13.06.04 Thread catcher guard.
- Operate cutting cylinder manually to check requirements 1 and 2.
- If necessary, adjust thread catcher 2 accordingly.
- Screw on cover plate 1.
- Operate cutting cylinder again and check requirement 3.
- If necessary, turn screw 4 carefully according to requirement 3.

13.07 Adjusting the tape feeding device

13.07.01 Adjusting the knife

Requirement
With cylinder 6 extended, the edge of the inside blade 2 should be approx. 0.1 mm above the edge of the outside blade 7.

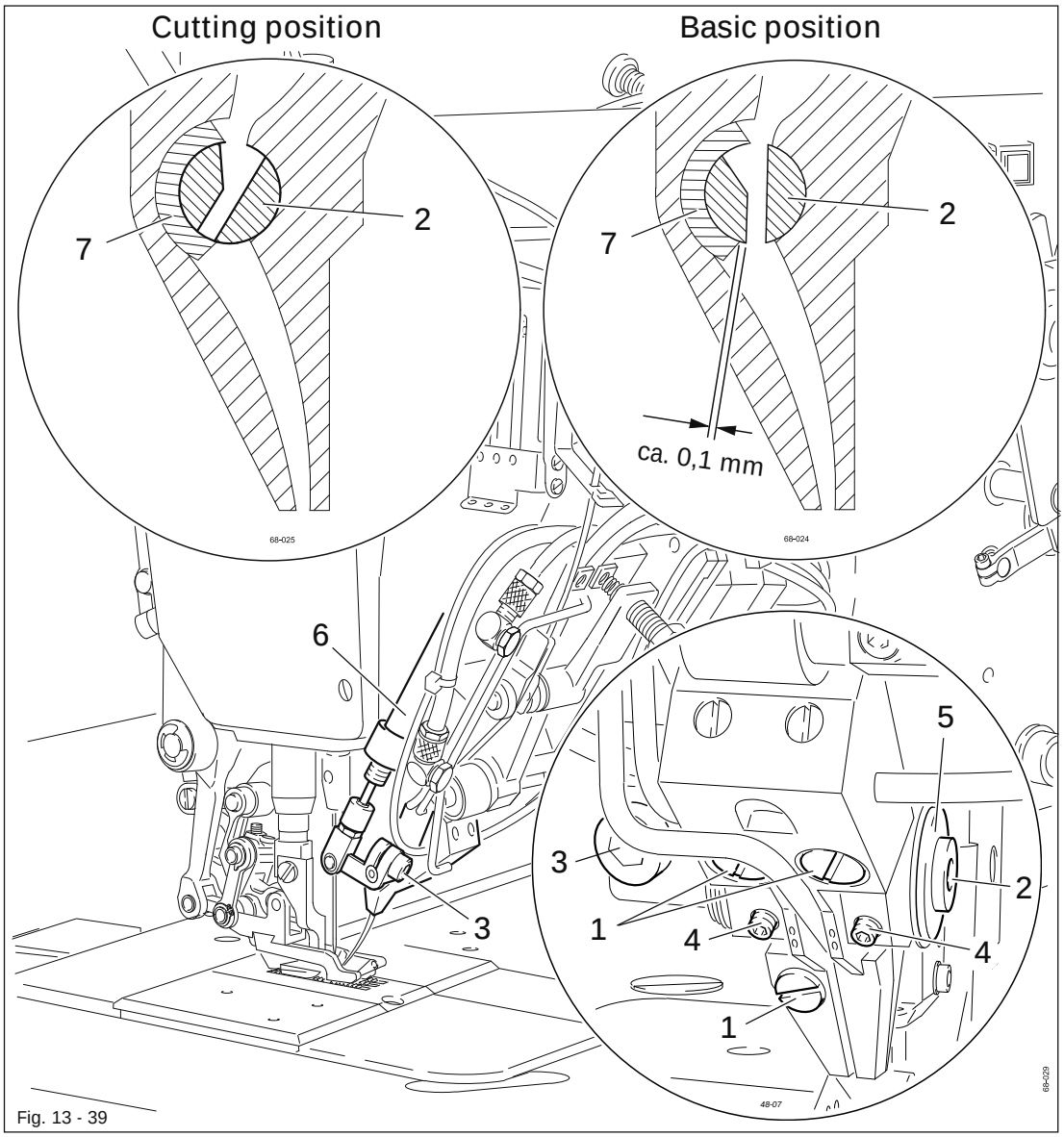

Fig. 13 - 39

- Remove cover (screw 1).
- Adjust inside blade 2 (screw 3) in accordance with the requirement.

Changing the knife:

- Loosen screw 4.
- Remove retaining ring 5 and pull out the complete knife towards the left.
- Assembly in the reverse order.

13.07.02 Setting the evaluation function of the photoelectric beam

Requirement

1. If the bridle tape 2 is in the detection range of the photoelectric beam 3 (regulate air jet on, valve Y52 activated), none of the LEDs 4 should be on.
2. If the bridle tape 2 is outside the detection range of the photoelectric beam 3, both LEDs 4 should be on.

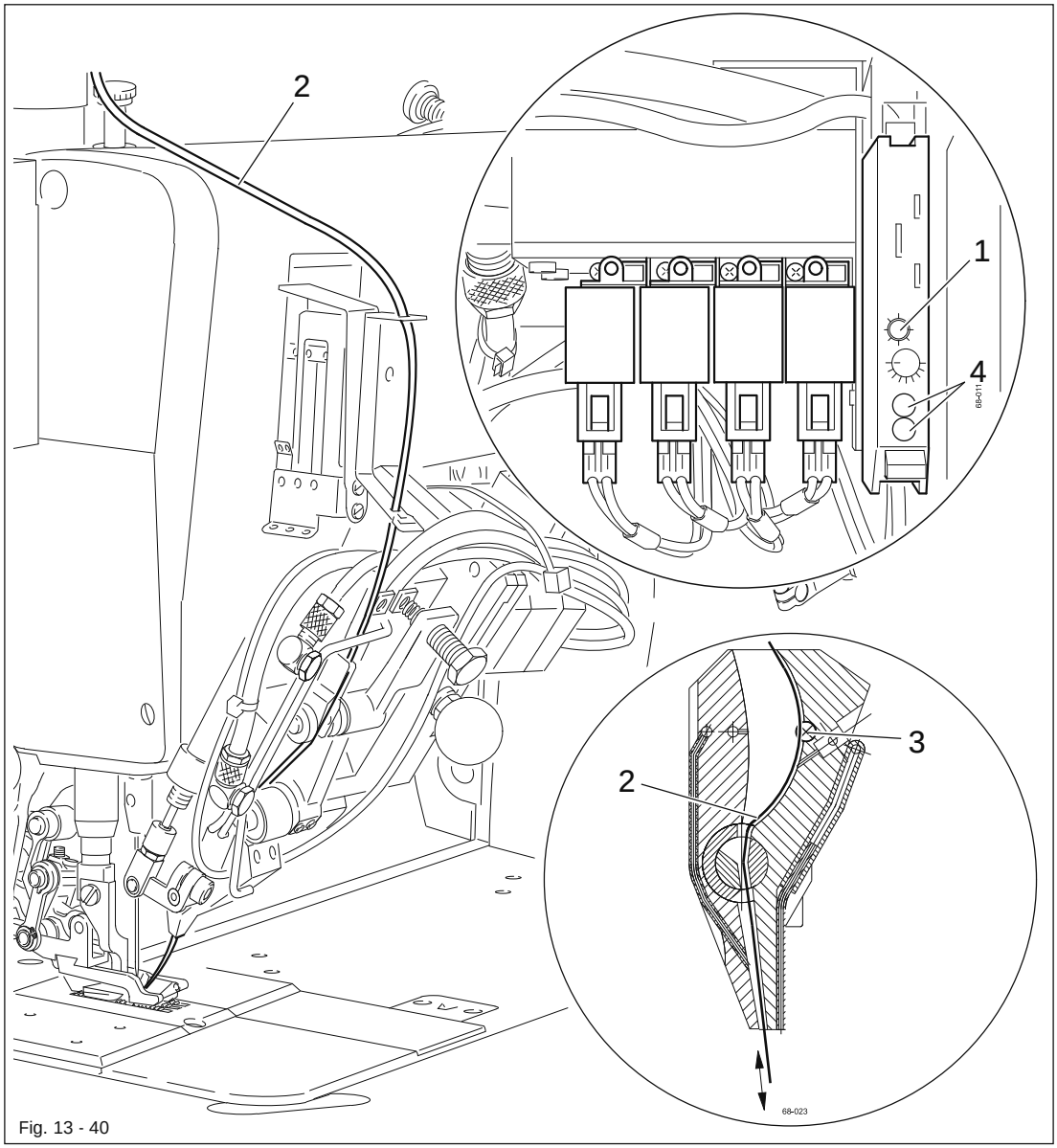

Fig. 13 - 40

- Adjust the trimmer 1 in accordance with the requirements.

To check the setting tighten and release bridle tape 2.
For further information see Data sheet for the evaluation of the photoelectric beam.

13.07.03 Adjusting the air jets

Requirement

1. Open throttle 1 far enough to press bridle tape 5 over air jet 6 into the range of the photoelectric beam 7, so that the switch status of the photoelectric beam is displayed (LEDs 8 are not on).
2. Open throttle 2 (jet 10) far enough to ensure a reliable sewing start.
3. Open throttle 3 (jet 11) far enough to ensure that the tape is dispensed reliably after trimming.
4. During the feed motion throttle 4 should only be opened far enough to press bridle tape 5 over air jet 9 out of the detection range of the photoelectric beam 7.

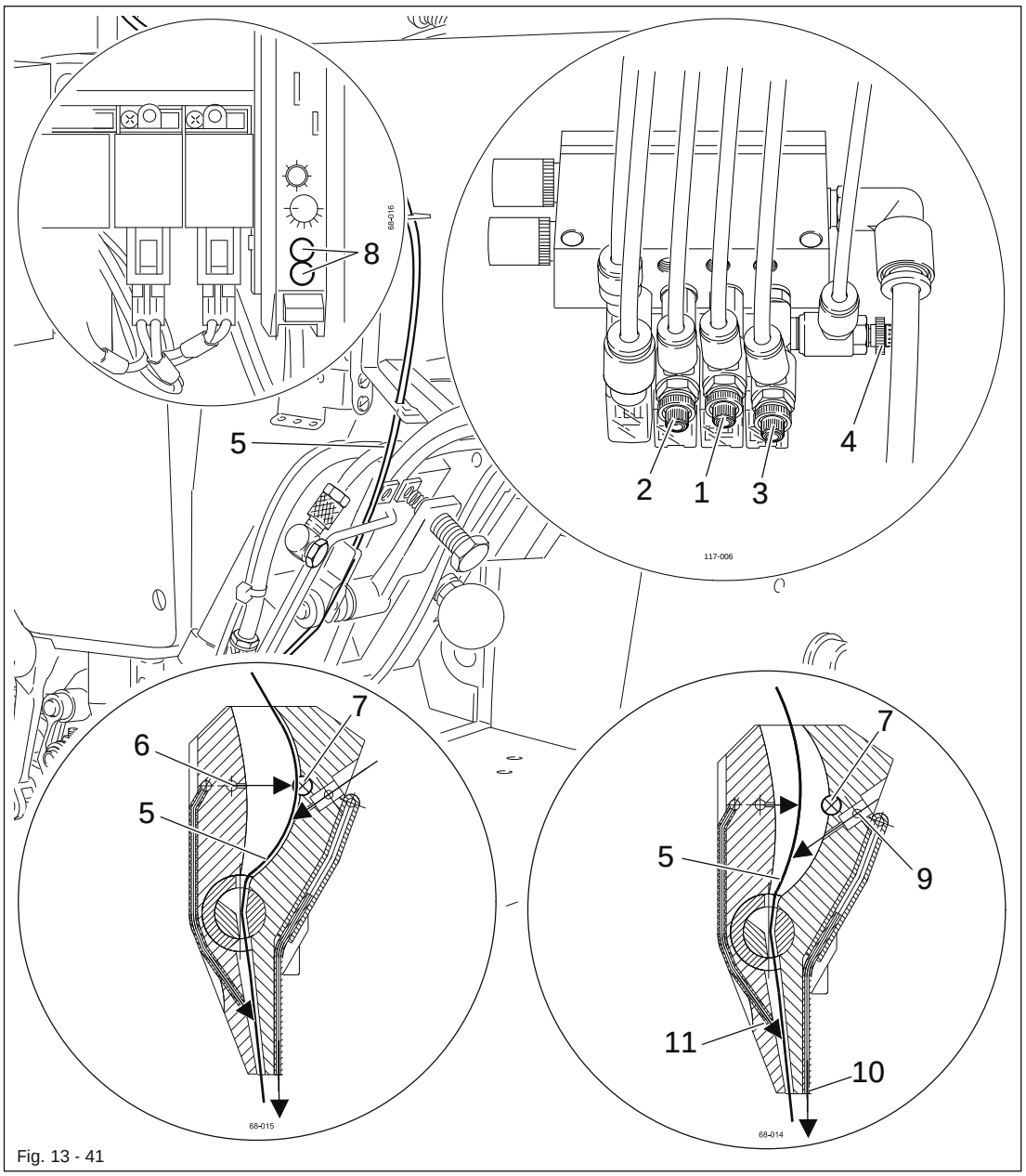

Fig. 13 - 41

- Adjust throttles 1 to 4 in accordance with requirements 1 to 4.

13.07.04 Fastening the light guides

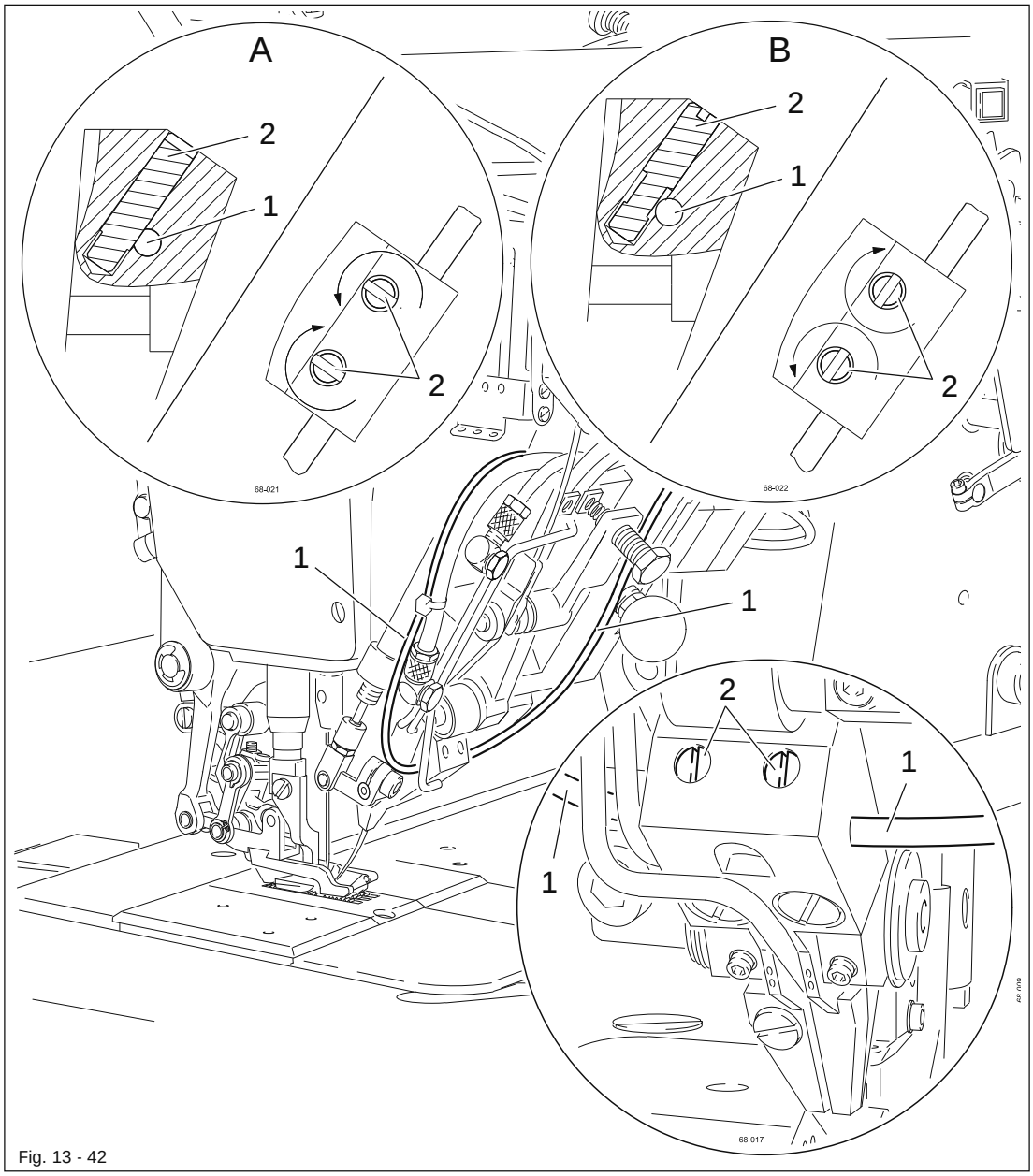

Fig. 13 - 42

The light guides 1 are led into the corresponding holes on the Tape feeding device and clamped with bolts 2, see magnified illustration A.
To release the clamping, the bolts 2 must be turned by 90º, see magnified illustration B.

For cutting or shortening the light guides 1, we recommend the use of a suitable knife (part no. 99-137 071-91).

13.08 Parameter settings

13.08.01 Overview of the parameter functions

After the machine has been switched on, by pressing the appropriate function the input mode is called up, in which the individual parameters can be called up directly. With a code it is possible to protect all or individual parameter groups against unauthorised access.

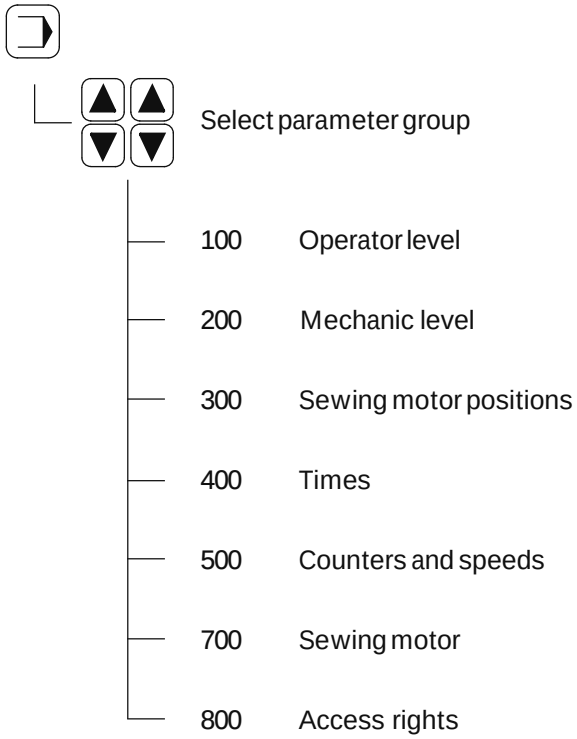

13.08.02 Example of a parameter input

- Switch on the machine.



- Call up the input mode.

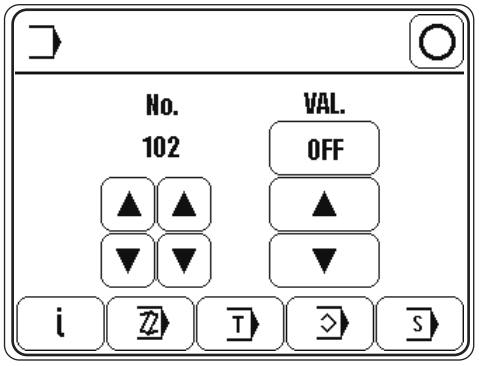



- e.g. call up parameter "113" (switch beep tone for section change on/off)

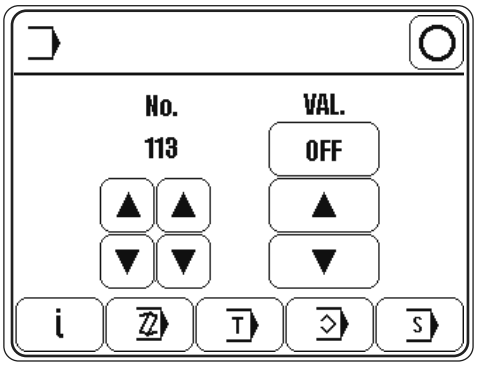

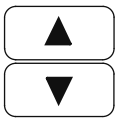

- e.g. switch beep tone on (value "ON").



- Conclude the input.

13.08.03 List of parameters



The operator has free access to the "100" parameters. Parameters "200" – "800" can only be changed after entering a code number and may only be changed by authorised personnel.

Group	Parameter	Description	Setting range	Set value
1	102	Reversing	OFF - ON	OFF
	113	Beep tone for section change	OFF - ON	OFF
	114	Max. speed forwards at each pedal position	OFF - ON	OFF
2	201	Machine configuration 1 = 3801-3/07, 3801-3/071 2 = 3801-11/071 (with tape feed)	1 - 2	1
	202	Knee switch for section change (in the seam programs 3 -49)	OFF - ON	OFF
	203	Length of tape feed section (mm)	0 - 99	0
	204	Length of prepared tape section (mm)	0 - 99	32
	205	Tape speed during feeding	0 - 9	9
	206	Tape speed during preparation	0 - 9	5
	207	Tape speed during threading	0 - 9	0
	208	Tape feed in knife	0.0 - 0.9	0.5
	212	not speed variation with change of fullness	OFF - ON	OFF
	213	program interruption with pedal-position -2	OFF - ON	OFF
3	301	Position "Needle point at top edge needle plate"	0 - 127	0
	302	Position "take-up lever t.d.c."	0 -127	107
	303	Position "needle lowered"	0 -127	60
	304	Reversing position	0 -127	107
	305	Placement stitch position	0 - 127	7
4	401	Delay time "lift foot" (s)	0.01 - 1.50	0.02
	402	Start delay after "lower foot" (s)	0.01 - 1.50	0.15
	403	Thread trimming time (s)	0.01 - 0.20	0.12
	404	Time for cleaning thread monitor (s)	0.01 - 1.50	0.25

Group	Parameter	Description	Setting range	Set value
5	501	Maximum speed	100 - 3500	3200
	504	Speed soft start	100 - 3500	1500
	505	Soft start stitches	0 - 15	0
7	701	P-quota speed controller	1 - 50	12
	702	I-quota speed controller	0 - 100	50
	703	P-quota position controller	1 - 50	20
	704	D-quota position controller	1 -100	30
	705	Time for position controller	0 - 100	25
	706	P-quota position controller for rest brake	1 - 50	25
	707	D-quota position controller for rest brake	1 - 50	15
	708	Maximum moment for rest brake	0 -100	0
	709	Minimum machine speed	3 - 64	6
	710	Maximum machine speed	1 - 35	32
	711	Maximum motor speed	1 - 35	32
	712	Positioning speed	3 - 25	18
	713	Acceleration ramp	1 - 50	35
	714	Brake ramp	1 - 50	30
	715	Reference position	0 - 127	0
	716	Time-out	0 - 255	40
	717	Starting current motor	3 - 10	8
	718	Anti-vibration filter	1 -10	6
	719	Rotation direction allocation	0 - 1	0
	720	Reference position correction	0 - 127	64
8	801	Right of access function group 100	0 - 1	0
	802	Right of access function group 200	0 - 1	1
	803	Right of access function group 300	0 - 1	1
	804	Right of access function group 400	0 - 1	1
	805	Right of access function group 500	0 - 1	1

Group	Parameter	Description	Setting range	Set value
8	806	Right of access service	0 - 1	1
	807	Right of access function group 700	0 - 1	1
	808	Right of access function group 800	0 - 1	1
	809	Right of access program creation	0 - 1	1
	810	Enter access code	0 - 9999	3800

13.09 Sewing motor errors

Error message	Description
34	Brake path too short
35	Communication error with limit control
36	Switch on sequence not ready
65	Extint low with Init
66	Short circuit
68	Extint low in operation
69	No increments
70	Motor stalling
71	No incremental plug
73	Disturbed motor running
75	Regulator blocked
170	Invalid transmission
171	Invalid zero point
175	Starting error
222	Time-out monitoring

13.10 Explanation of the error messages

Message	Description
E001	System error
E002	Sewing motor E002/BB/xxx BB = 20: Time-out 02: Position forwards 03: Position in reverse 05: Position by shortest path 09: Write parameter 10: Speed 0A: Reset stitch counter 0B: Stop after xxx stitches 30: Time-out for increasing speed 31: Time-out for uncertain positioning 32: Time-out for time-out command 33: Time-out for deleting errors 34: Time-out for emergency stop 35: Time-out for writing parameters 36: Time-out for resetting stitch counter 37: Time-out for stop command after x stitches 38: Time-out for initialization xxx = error bytes of sewing motor control unit (see Chapter 13.09 Sewing Motor Errors)
E003	Section
E004	End of section
E005	Pedal activated when machine switched on
E007	End of ramp
E008	Reference for fullness adjustment not found 1: When moving towards sensor 2: When moving away from sensor
E009	Tape feed 1: Tape section too large when adjusting 2: Threading stopped after 2 attempts
E011	Stepping motor stepping frequency too high
E014	Incorrect program number (larger than 49)
E015	Incorrect seam section number
E016	Memory full
E021	Power supply unit overloaded
E022	Mains voltage
E023	Power supply 24V too low
E024	Error at CAN interface

13.11 Table of inputs

E1	not assigned
E2	not assigned
E3	not assigned
E4	Start inhibitor
E5	not assigned
E6	Knee switch
E7	not assigned
E8	not assigned
E9	not assigned
E10	not assigned
E11	not assigned
E12	not assigned
E13	not assigned
E14	not assigned
E15	Light barrier tape feed (on 3801-11/071)
E16	Reference for fullness adjustment

13.12 Table of outputs

O1	Raise sewing foot (O1.1 and O1.2)
O2	Thread trimmer (O2.1 and O2.2)
O3	not assigned
O4	not assigned
O5	not assigned
O6	not assigned
O7	not assigned
O8	not assigned
O9	not assigned
O10	not assigned
O11	not assigned
O12	not assigned
O13	Tape cupping (on 3801-11/071)
O14	Blast air "front feed motion" (on 3801-11/071)
O15	Blast air "feed motion" (on 3801-11/071)
O16	Blast air "adjustment" (on 3801-11/071)

13.13 Service menu

In the service menu information is displayed about the machine's inputs and outputs, as well as the values for the pedal and the balance wheel position.
In addition the following functions can also be carried out.

- Switch on the machine.

- Call up the input mode.

- Call up the service menu.

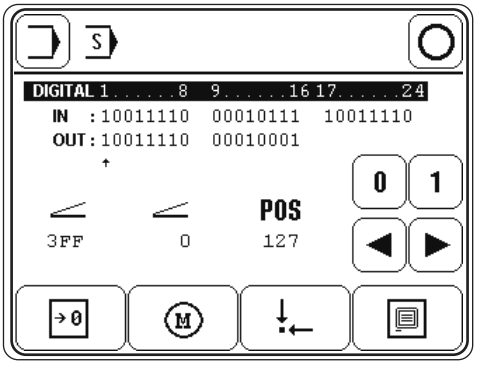

Explanation of the functions

Input mode
Quit the service menu and call up the input mode.

Sewing mode
Quit the service menu and call up the sewing mode.

Set/reset outputs
Use the arrow functions to select the desired output and set "function 1" or reset "function 2".

Cold start
See Chapter 13.14 Carry out a cold start.

Motors
After this function has been called up, the stepping motors for fullness and for the sewing motor can be moved. On the PFAFF 3801-11/071 the stepping motor of the tape feed unit can also be moved.

Basic position of the stepping motor
After this function has been called up, the basic position of the fullness stepping motor can be changed.

Control panel
See Chapter 9.11 Adjusting the control panel.

13.14 Carry out a cold start

- Switch on the machine.



- Call up the input mode.

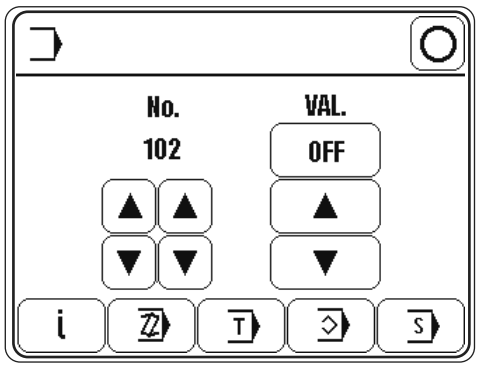



- Call up the service menu.

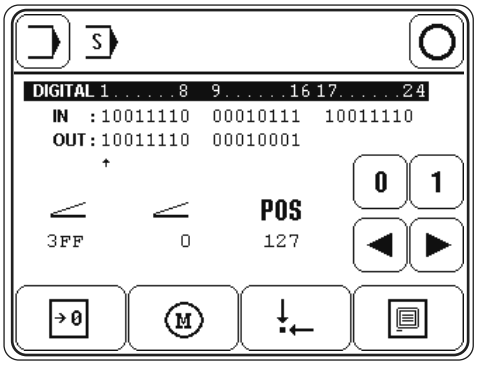

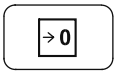

- Carry out a cold start.



After a cold start all programmed values are set back to their status at the time of delivery.
All sewing programs are also deleted.

13.15 Internet update of the machine software

The machine software can be updated with PFAFF flash programming. For this purpose the PFP boot program and the appropriate control software for the machine type must be installed on a PC. To transfer the data to the machine, the PC and the machine control unit must be connected with an appropriate null modem cable (part no. 91-291 998-91).

The PFP boot program and the control software of the machine type can be downloaded from the PFAFF-homepage using the following path:
www.pfaff-industrial.de/pfaff/de/service/downloads

To update the machine software carry out the following steps:

While the machine software is being updated, no setting up, maintenance or adjustment work may be carried out on the machine!

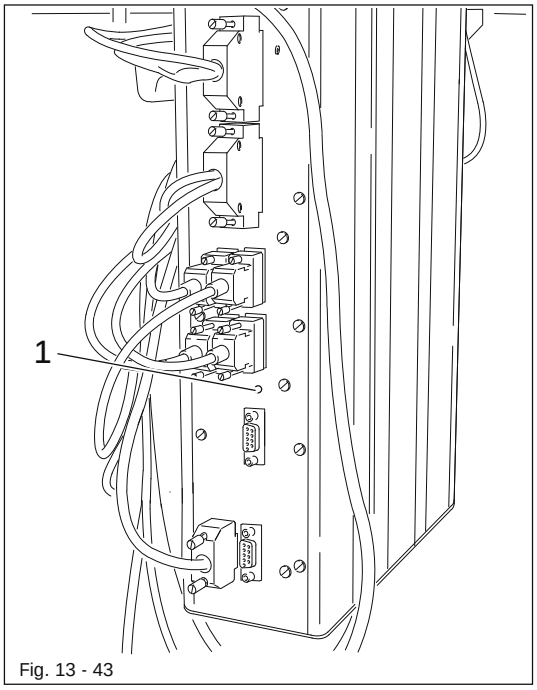

Fig. 13 - 43

- Switch off the machine.
- Connect the PC (serial interface or appropriate USB-adapter) and the machine control unit (RS232). To do so disconnect the plug of the control panel.
- Switch on the PC and start the PFP boot program.
- Select the machine type.
- Press the "programming" button.
- Hold down boot key 1 and switch on the machine.
- Press the "OK" button.

- The software update is carried out, the update progress is shown on the bar display of thePFP boot program.
- During the up-dating procedure the machine must not be switched off.
- When the update has been completed, switch off the machine and end the PFP boot program.
- End the connection between the PC and the machine control unit and reconnect the control panel to the machine control unit.
- Switch on the machine.
  A plausibility control is carried out and, if necessary, a cold start.

More information and assistance is at your disposal in the file "PFPHILFE.TXT", which can be called up from the PFP boot program by pressing the "help" button.

14 Wearing parts

This is a list of the most important wearing parts.
A detailed parts list for the complete machine is included with the accessories. In case of loss, the parts list can be downloaded from the internet address www.pfaff-industrial.com/pfaff/en/service/downloads As an alternative to the internet download the parts lists can also be ordered in book form under part no. 296-12-18 590.

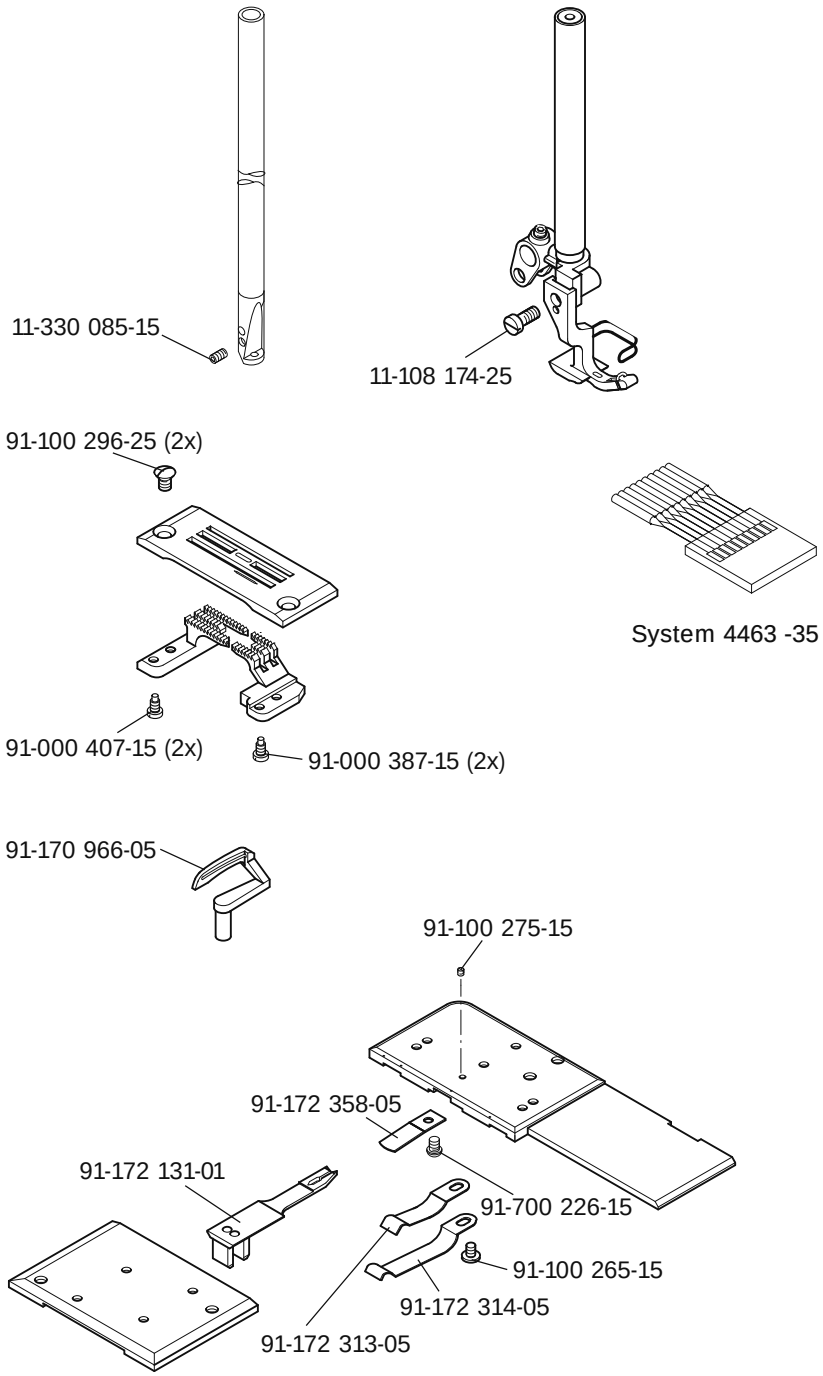

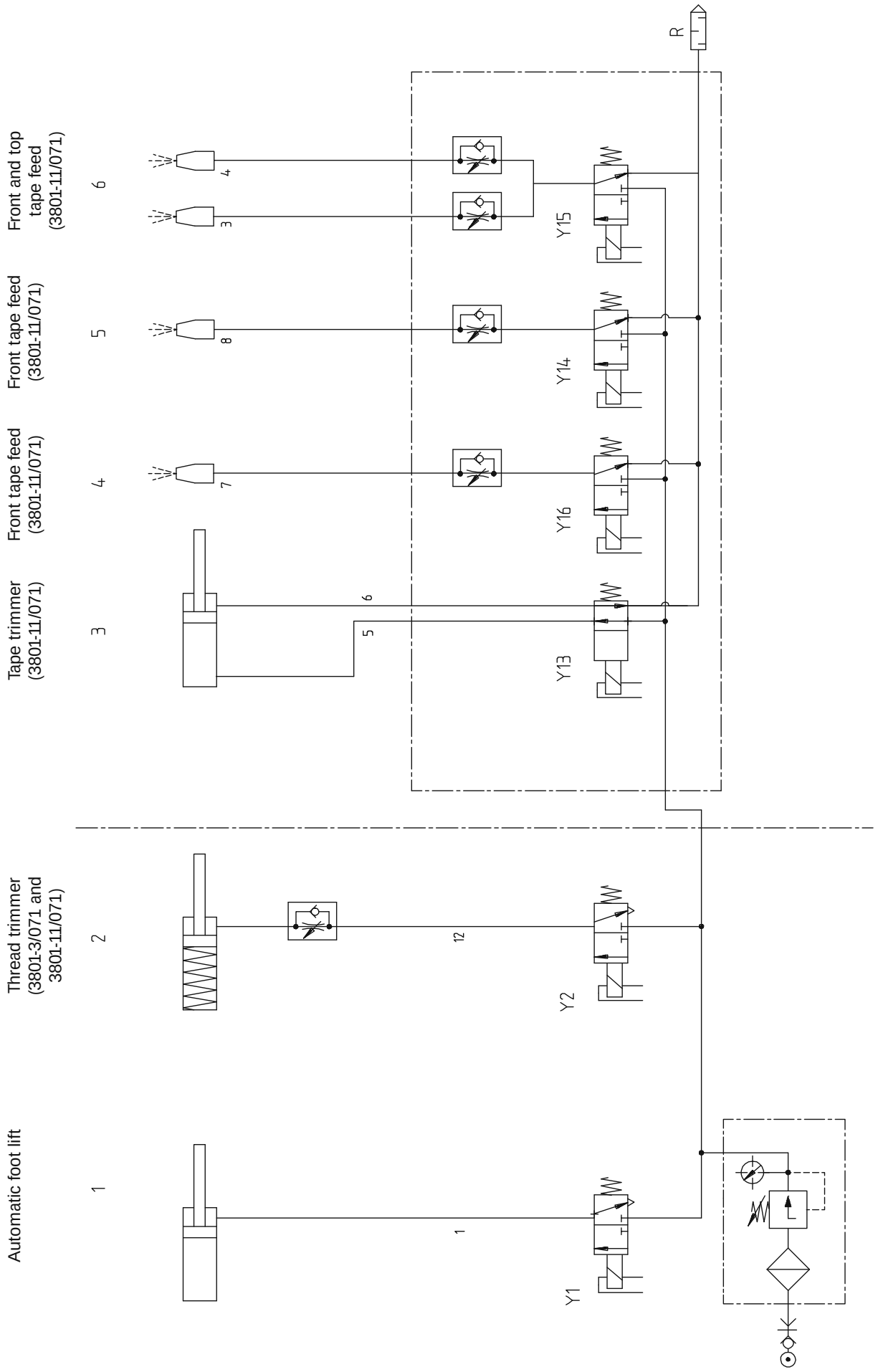
R
Front and top tape feed (3801-11/071)
6
4
3
Y15
Front tape feed (3801-11/071)
5
8
Y14
Front tape feed (3801-11/071)
4
7
Y16
Tape trimmer (3801-11/071)
3
6
5
Y13
Thread trimmer (3801-3/071 and 3801-11/071)
2
12
Y2
Automatic foot lift
1
1
Y1

15 Circuit diagrams

Reference list for circuit diagrams

A1	Controller Quick P 320MS
A2	Control panel T1
A14	Sewing head identification
B15	Light barrier SM 2 (only on 3801-11/071)
B10	Initiator SM1, reference
H1	Sewing lamp
M1	Sewing motor
M2	Stepping motor tape feed (only on 3801-11/071)
M3	Stepping motor fullness adjustment
Q1	Main switch
S6	Knee switch (program switching)
S17	Pedal speed control unit
S18	Sychronizer PD3
X1	Mains plug
X1A	RS232 – interface 1 Control panel T1
X1B	VSS Sewing head identification
X3	Incremental transmitter (control unit)
XR3	Incremental transmitter (sewing motor)
XS3	Synchronizer PD3
X4A	SM2 Stepping motor tape (only on 3801-11/071)
X4B	SM1 Stepping motor fullness
X5	Inputs
X8	Sewing motor
X11A	CAN interface
X11B	Pedal speed control unit
X13	Outputs
X20	SM2 Stepping motor tape (only on 3801-11/071)
X21	SM1 Stepping motor fullness
X36	Knee switch (program switch)
X45	SM2 light barrier (only on 3801-11/071)
X46	SM1 Initiator reference
X51	Y1 910/..Automatic presser foot lift
X52	Y2 900/.. Thread trimmer
X63	Y13 Tape cutting only on 3801-11/071
X64	Y14 Tape air front only on 3801-11/071
X65	Y15 Tape feed motion only on 3801-11/071
Y1	Automatic presser foot lift (-910/..)
Y2	Thread trimmer (-900/..)
Y13	Tape cutting (only on 3801-11/071)
Y14	Tape air front (only on 3801-11/071)
Y15	Tape feed motion (only on 3801-11/071)
Y16	Adjust air tape (only on 3801-11/071)

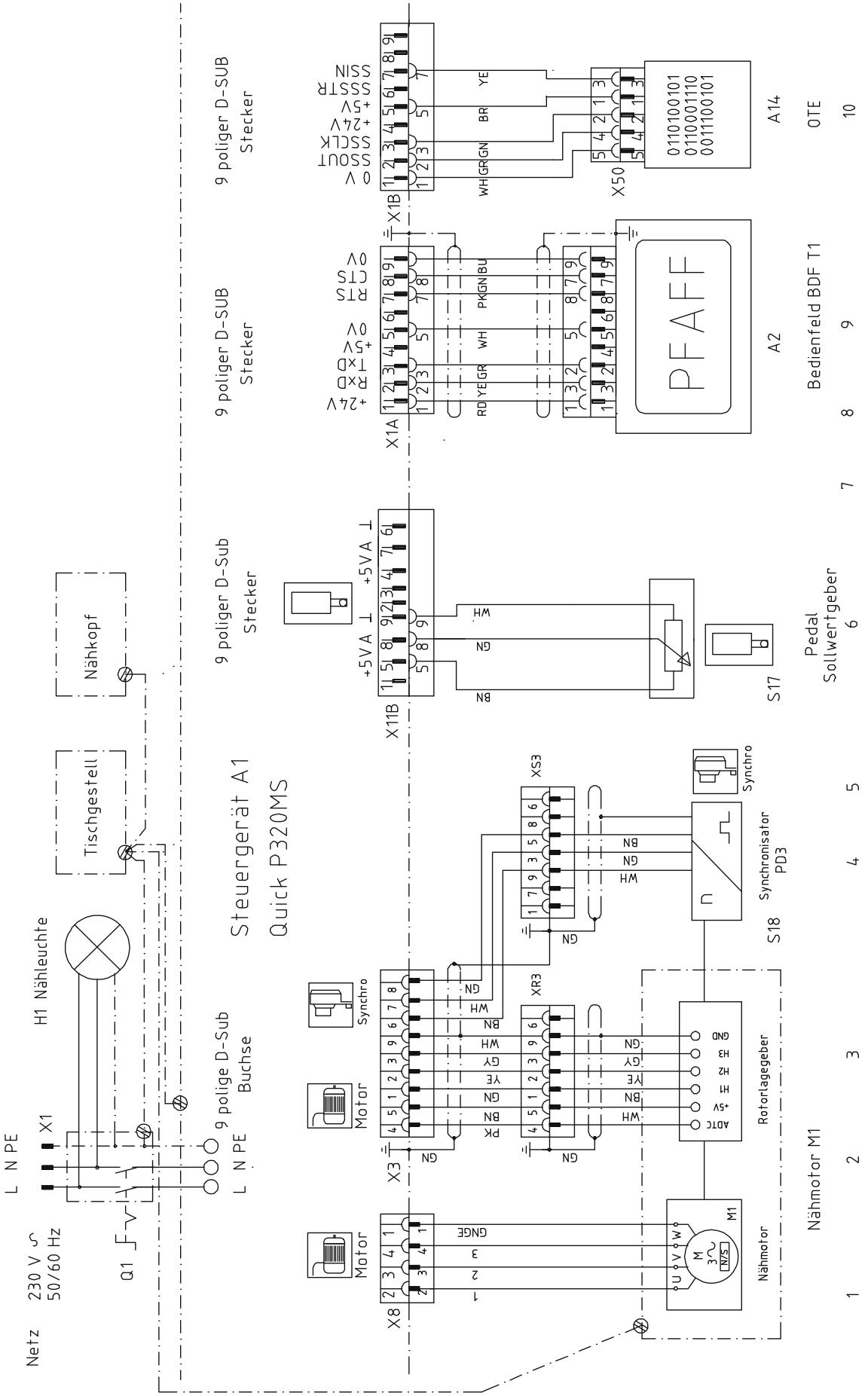
Netz
230 V ~
50/60 Hz
L N PE
X1
Q1
H1 Nähleuchte
Tischgestell
Nähkopf
9 polige D-Sub
Buchse
Steuergerät A1
Quick P320MS
9 poliger D-Sub
Stecker
X8
X3
Motor
Synchro
XR3
XS3
Synchronisator
PD3
S18
Rotorlagegeber
Nähmotor
M1
X11B
+5VA
S17
Pedal
Sollwertgeber
X1A
+24V
RxD
TxD
+5V
0V
RTS
CTS
PFAFF
A2
Bedienfeld BDF T1
X1B
0 V
SSOUT
SSCLK
+24V
+5V
SSSTR
SSIN
X50
0110100101
0110001110
0011100101
A14
OTE
1
2
3
4
5
6
7
8
9
10

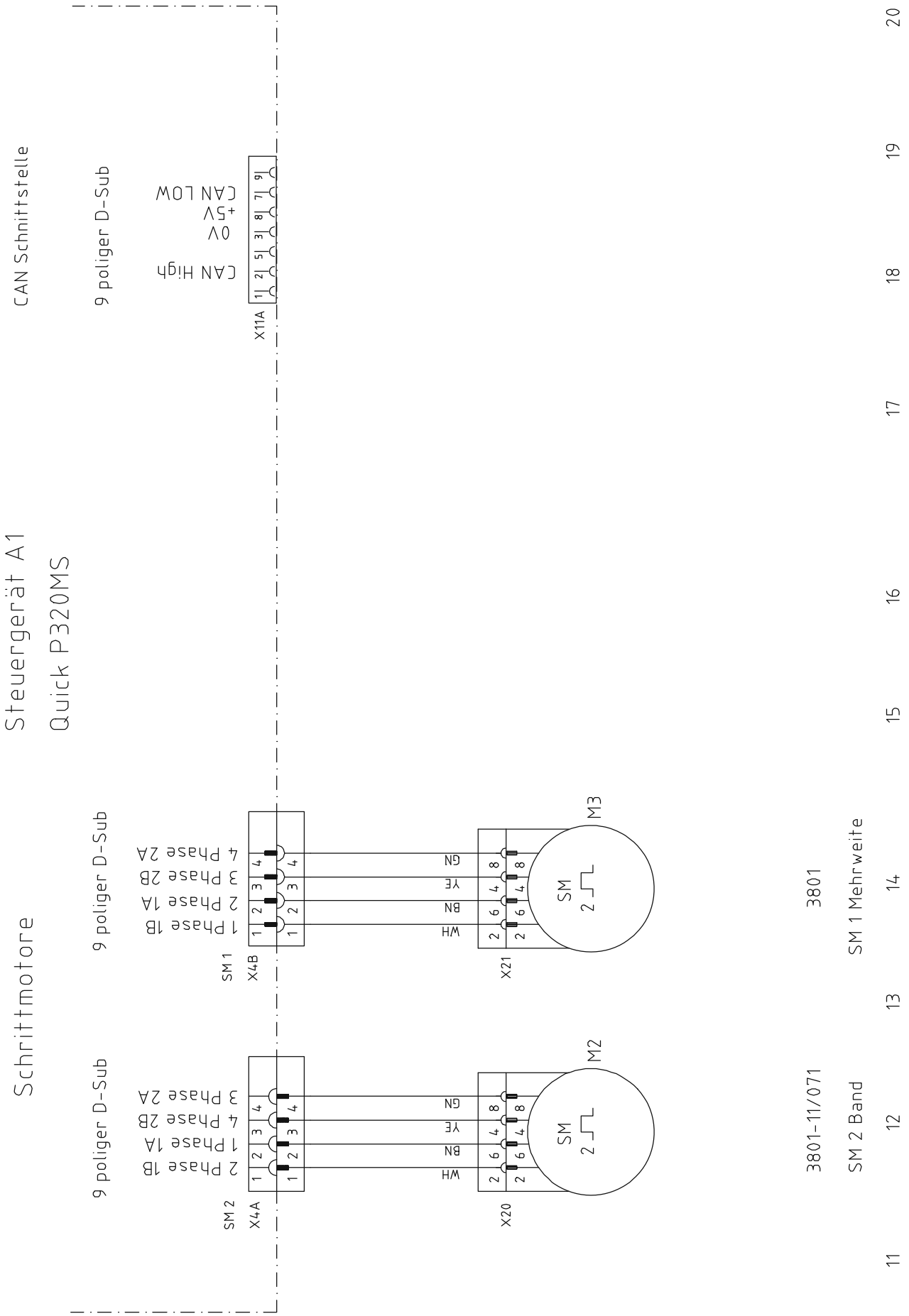
Steuergerät A1
Quick P320MS
CAN Schnittstelle
9 poliger D-Sub
X11A
CAN High
0V
+5V
CAN LOW
Schrittmotore
9 poliger D-Sub
SM 1
X4B
1 Phase 1B
2 Phase 1A
3 Phase 2B
4 Phase 2A
X21
M3
SM
WH
BN
YE
GN
9 poliger D-Sub
SM 2
X4A
1 Phase 1B
2 Phase 1A
3 Phase 2B
4 Phase 2A
X20
M2
SM
WH
BN
YE
GN
3801
SM 1 Mehrweite
3801-11/071
SM 2 Band
11
12
13
14
15
16
17
18
19
20

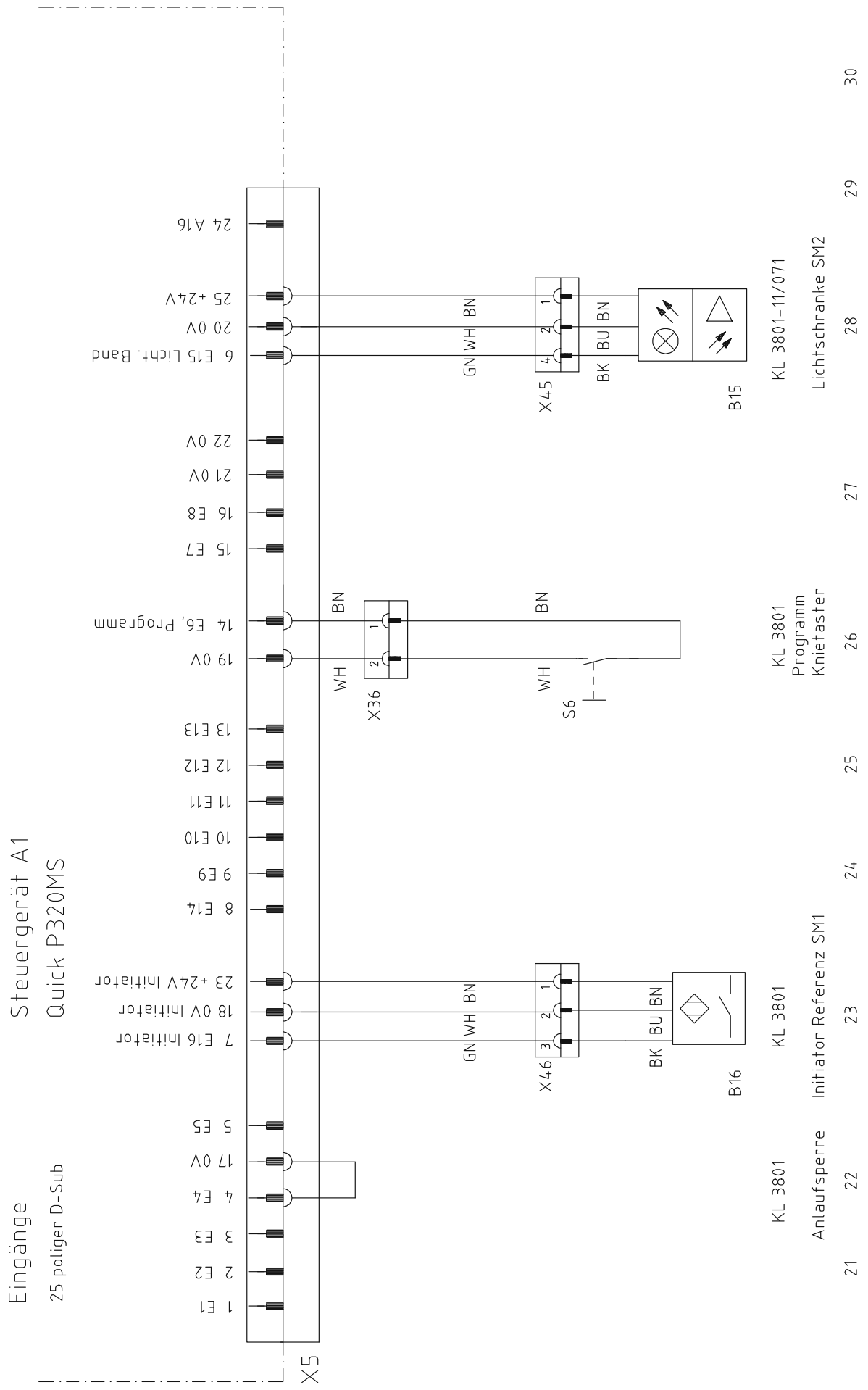
Steuergerät A1
Quick P320MS
Eingänge
25 poliger D-Sub
X5
1 E1
2 E2
3 E3
4 E4
17 0V
5 E5
7 E16 Initiator
18 0V Initiator
23 +24V Initiator
8 E14
9 E9
10 E10
11 E11
12 E12
13 E13
19 0V
14 E6, Programm
15 E7
16 E8
21 0V
22 0V
6 E15 Licht. Band
20 0V
25 +24V
24 A16
X46
GN WH BN
BK BU BN
B16
KL 3801
Anlaufsperre
Initiator Referenz SM1
X36
WH
BN
S6
KL 3801
Programm
Knieraster
X45
GN WH BN
BK BU BN
B15
KL 3801-11/071
Lichtschranke SM2
21 22 23 24 25 26 27 28 29 30

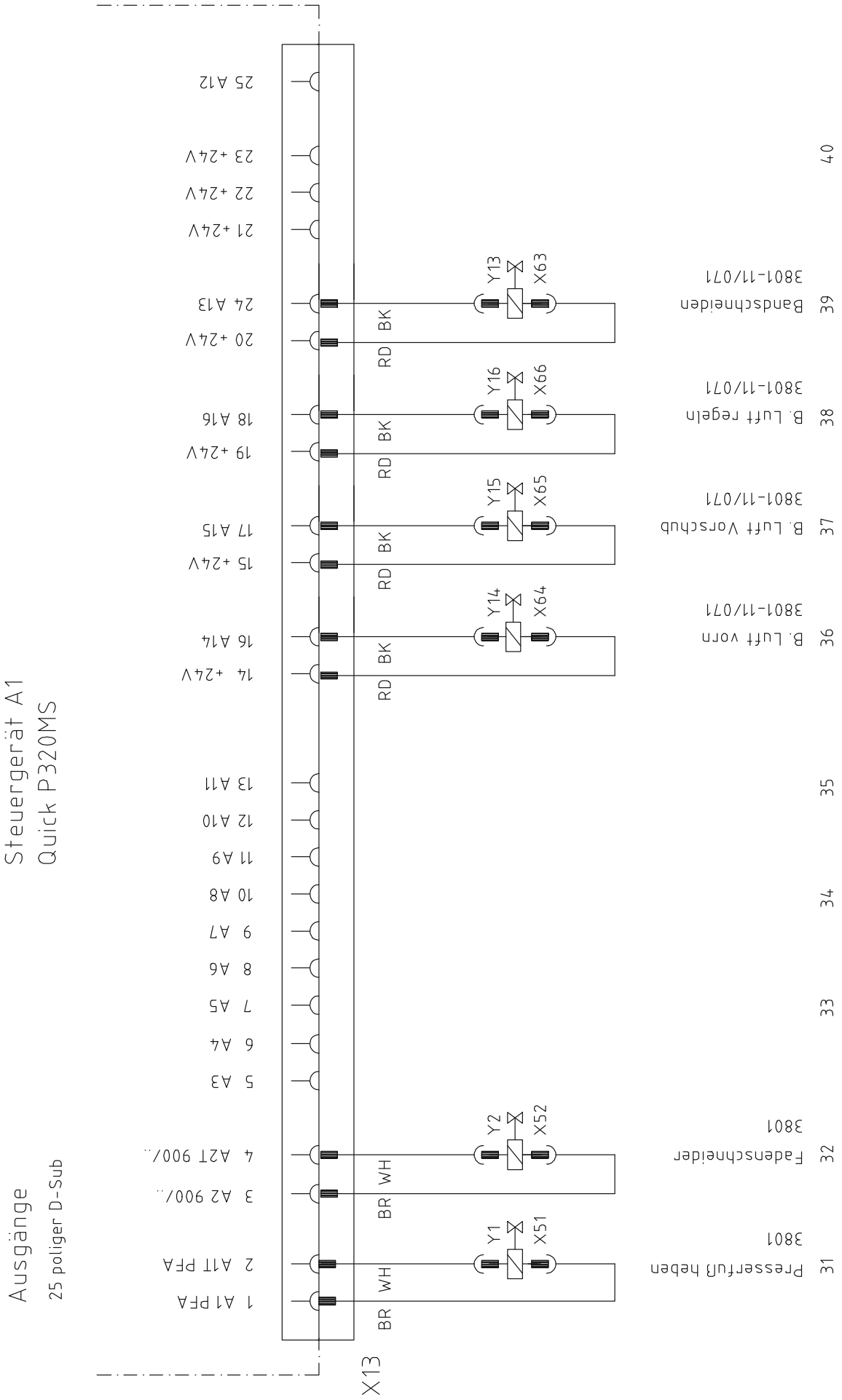
Steuergerät A1
Quick P320MS
Ausgänge
25 poliger D-Sub
X13
1 A1 PFA
2 A1T PFA
3 A2 900/..
4 A2T 900/..
5 A3
6 A4
7 A5
8 A6
9 A7
10 A8
11 A9
12 A10
13 A11
14 +24V
15 +24V
16 A14
17 A15
18 A16
19 +24V
20 +24V
21 +24V
22 +24V
23 +24V
24 A13
25 A12
BR
WH
RD
BK
Y1
X51
Y2
X52
Y13
X63
Y14
X64
Y15
X65
Y16
X66
31
Pressefluß heben
3801
32
Fadenschneider
3801
33
34
35
36
B. Luft vorn
3801-11/071
37
B. Luft Vorschub
3801-11/071
38
B. Luft regeln
3801-11/071
39
Bandschneiden
3801-11/071
40

PFAFF® Industrial



Europäische Union
Wachstum durch Innovation – EFRE



PFAFF Industriesysteme
und Maschinen AG

Hans-Geiger-Str. 12 - IG Nord
D-67661 Kaiserslautern

Phone: +49-6301 3205 - 0
Fax: +49-6301 3205 1386
E-mail: info@pfaff-industrial.com

Hotlines:

Technical service:	+49-175/2243-101
Application consultance:	+49-175/2243-102
Spare-parts hotline:	+49-175/2243-103

Printed in Germany

© PFAFF Industriesysteme und Maschinen AG 2009, PFAFF is the exclusive trademark of VSM Group AB.PFAFF Industriesysteme und Maschinen AG is an authorized licensee of the PFAFF trademark.