PFAFF® Industrial

3822 -2/42, -2/44

INSTRUCTION MANUAL

This instruction manual applies to machines from serial number **2 719 930** and software version **0352/011** onwards. →

296-12-18 592/002
Betriebsanleitung engl. 03.12



This Instruction Manual is valid for all models and subclasses listed in the chapter "Specifications".

The reprinting, copying or translation of PFAFF Instruction Manuals, whether in whole or in part, is only permitted with our previous authorization and with written reference to the source.

PFAFF Industriesysteme
und Maschinen AG

Hans-Geiger-Str. 12 - IG Nord
D-67661 Kaiserslautern

Contents ..... Chapter - Page

1	Safety	1 - 1
1.01	Directives	1 - 1
1.02	General notes on safety	1 - 1
1.03	Safety symbols	1 - 2
1.04	Important points for the user	1 - 2
1.05	Operating and specialist personnel	1 - 3
1.05.01	Operating personnel	1 - 3
1.05.02	Specialist personnel	1 - 3
1.06	Danger	1 - 4
2	Proper use	2 - 1
3	Specifications	3 - 1
4	Disposal of Machine	4 - 1
5	Transportation, packing and storage	5 - 1
5.01	Transportation to customer's premises	5 - 1
5.02	Transportation inside the customer's premises	5 - 1
5.03	Disposal of packing materials	5 - 1
5.04	Storage	5 - 1
6	Explanation of symbols	6 - 1
7	Controls	7 - 1
7.01	Main switch	7 - 1
7.02	Pedal	7 - 1
7.03	Presser bar lifter	7 - 2
7.04	Knee Switch	7 - 2
7.05	Left knee switch	7 - 3
7.06	Control panel	7 - 3
7.07	Keyboard	7 - 4
8	Mounting and commissioning the machine	8 - 1
8.01	Mounting	8 - 1
8.01.01	Adjusting the table-top height	8 - 1
8.01.02	Tightening the V-belt	8 - 2
8.01.03	Fitting the top V-belt guard	8 - 2
8.01.04	Mounting the bottom V-belt guard	8 - 3
8.01.05	Fitting the synchronizer	8 - 3
8.01.06	Connecting the plug-in connections and earth cables	8 - 4
8.01.07	Fitting the reel stand	8 - 5
8.02	Commissioning	8 - 6
8.03	Switching the machine on/off	8 - 6

Contents ..... Chapter - Page

9	Preparation	9 - 1
9.01	Inserting the needle	9 - 1
9.02	Winding the bobbin thread, adjusting the thread tension	9 - 2
9.03	Removing/inserting the bobbin case	9 - 3
9.04	Threading the bobbin case, adjusting the thread tension	9 - 3
9.05	Oberfaden einfädeln	9 - 4
9.06	Oberfadenspannung regulieren	9 - 4
9.07	Selecting the program number	9 - 5
9.08	Inputting fullness	9 - 6
9.09	Entering / altering the code number	9 - 7
9.10	Adjusting the control panel	9 - 9
10	Sewing	10 - 1
10.01	Manual sewing	10 - 1
10.01.01	Entering the seam start and seam end in manual sewing mode	10 - 3
10.01.02	Selecting the material type	10 - 4
10.02	Sewing with fixed programs	10 - 5
10.03	Programmed sewing	10 - 7
10.03.01	Program interruption	10 - 9
10.04	Error messages	10 - 9
11	Input	11 - 1
11.01	Seam program input	11 - 2
11.01.01	Basic settings for seam program input	11 - 2
11.01.02	Seam program input with the "Creating/adjusting a program" function	11 - 4
11.01.03	Entering the actual and required length of the seam section	11 - 6
11.01.04	Seam program input with the "Creating/adjusting a program" function	11 - 7
11.01.05	Entering the functions at the beginning of the seam during seam programming	11 - 9
11.01.06	Entering the functions at the end of seam section during seam programming	11 - 10
11.02	Examples of how to create a seam program	11 - 12
11.02.01	Example of a seam program input with the "creating/adjusting a program"	
11.02.02	Example of a seam program input using the "teach-in" function	11 - 18
11.03	Seam program administration	11 - 22
12	Care and Maintenance	12 - 1
12.01	Cleaning the machine	12 - 1
12.02	Oil level of the machine	12 - 2
12.03	Cleaning/lubricating the top feed joints	12 - 2
12.04	Checking/adjusting the air pressure	12 - 3
12.05	Cleaning the air filter of the air-filter/lubricator	12 - 3
13	Adjustment	13 - 1
13.01	Notes on adjustment	13 - 1
13.02	Tools, gauges and other accessories	13 - 1
13.03	Abbreviations	13 - 1

Contents ..... Chapter - Page

13.04	Control and adjustment aids	13 - 2
13.05	Adjusting the basic machine	13 - 3
13.05.01	Basic position of the machine	13 - 3
13.05.02	Preliminary adjustment of the needle height	13 - 4
13.05.03	Needle in needle-hole centre	13 - 5
13.05.04	Neutral position of the bottom feed dog	13 - 6
13.05.05	Feeding motion of the bottom feed dog	13 - 7
13.05.06	Lifting motion of the bottom feed dog	13 - 8
13.05.07	Height of the bottom feed dog	13 - 9
13.05.08	Clearance between presser foot and needle plate	13 - 10
13.05.09	Stop in relation to the presser foot	13 - 11
13.05.10	Top feed driving and connecting lever	13 - 12
13.05.11	Neutral position of the top feed dog	13 - 13
13.05.12	Feeding motion of the top feed dog	13 - 14
13.05.13	Front linkage rod to top feed drive	13 - 15
13.05.14	Top feed stroke	13 - 16
13.05.15	Lifting motion of the top feed dog	13 - 17
13.05.16	Stitch length adjustment	13 - 18
13.05.17	Stitch length limitation	13 - 19
13.05.18	Basic setting of the differential adjustment device	13 - 20
13.05.19	Eccentric hook shaft bearing and hook-to-needle clearance	13 - 21
13.05.20	Needle bar rise, readjustment of the needle height and bobbin case position stop	13 - 22
13.05.21	Bobbin opener height	13 - 23
13.05.22	Adjustment of the bobbin opener	13 - 24
13.05.23	Bobbin case opener	13 - 25
13.05.24	Needle thread tension release	13 - 26
13.05.25	Thread check spring	13 - 27
13.05.26	Bobbin winder	13 - 28
13.05.27	Position of the top feed dog in relation to the sewing foot	13 - 29
13.05.28	Top feed dog and sewing foot pressure	13 - 30
13.05.29	Stitch condensation	13 - 31
13.06	Adjusting the thread trimmer	13 - 32
13.06.01	Pre-adjusting the control cam	13 - 32
13.06.02	Roller lever	13 - 33
13.06.03	Pawl	13 - 34
13.06.04	Engaging solenoid	13 - 35
13.06.05	Release lever	13 - 36
13.06.06	Engaging lever	13 - 37
13.06.07	Lateral adjusting of the thread catcher	13 - 38
13.06.08	Front reversal point of the thread catcher	13 - 39
13.06.09	Re-adjusting the control cam	13 - 40
13.06.10	Retaining spring	13 - 41
13.06.11	Knife to needle clearance	13 - 42
13.06.12	Manual trimming control	13 - 43

Contents ..... Chapter - Page

13.06.13 Tension release of needle thread ..... 13 - 44
13.06.14 Attaching and removing the thread trimming unit ..... 13 - 45

13.07 Adjusting the edge trimming device on the PFAFF 3822-2/42 ..... 13 - 46
13.07.01 Knife stroke ..... 13 - 46
13.07.02 Neutral position of the knife stroke ..... 13 - 47
13.07.03 Knife height ..... 13 - 48
13.07.04 Aligning the knife ..... 13 - 49
13.07.05 Adjusting the stop eccentric ..... 13 - 50

13.08 Adjusting the feathered trimming device on the PFAFF 3822-2/44 ..... 13 - 51
13.08.01 Top stroke motion of the knife ..... 13 - 51
13.08.02 Cutting angle of the front knife ..... 13 - 52
13.08.03 Cutting position of the front knife ..... 13 - 53
13.08.04 Cutting pressure of the front knife ..... 13 - 54
13.08.05 Knife stroke zero point ..... 13 - 55
13.08.06 Side position of the back knife in relation to the hook knife ..... 13 - 56
13.08.07 Cutting angle of the back knife in relation to the hook knife ..... 13 - 57
13.08.08 Cutting pressure between the back knife and the hook knife ..... 13 - 58
13.08.09 Cutting depth of the back knife ..... 13 - 59
13.08.10 Cutting depth of the front knife ..... 13 - 60
13.08.11 Trimming margin ..... 13 - 61
13.08.12 Sensor control of the hook knife ..... 13 - 62
13.08.13 Air-blast tube for separating the material plies ..... 13 - 63
13.08.14 Air-blast tube for cutting waste ..... 13 - 64

13.09 Parameter settings ..... 13 - 65
13.09.01 Overview of the parameter functions ..... 13 - 65
13.07.02 Example of a parameter input ..... 13 - 66
13.09.03 List of parameters ..... 13 - 67

13.10 Sewing motor errors ..... 13 - 69
13.11 Explanation of the error messages ..... 13 - 70
13.12 Table of inputs ..... 13 - 71
13.13 Table of outputs ..... 13 - 71
13.14 Service menu ..... 13 - 72
13.15 Carry out a cold start ..... 13 - 73
13.16 Internet update of the machine software ..... 13 - 74

14 Wearing parts ..... 14 - 1

15 Circuit diagrams ..... 15 - 2

1 Safety

1.01 Regulations

This machine is constructed in accordance with the European regulations indicated in the conformity and manufacturer's declarations.
In addition to this instruction manual, please also observe all generally accepted, statutory and other legal requirements, including those of the user's country, and the applicable pollution control regulations!
The valid regulations of the regional social insurance society for occupational accidents or other supervisory authorities are to be strictly adhered to!

1.02 General notes on safety

- The machine must only be operated by adequately trained operators and only when the instruction manual has been fully read and understood!
- All notices on safety and the instruction manual of the motor manufacturer are to be read before the machine is put into operation!
- All notes on the machine concerning danger and safety must be observed!
- The machine must be used for the purpose for which it is intended and must not be operated without its safety devices; all regulations relevant to safety must be adhered to.
- When part sets are changed (e.g. needle, presser foot, needle plate, feed dog or bob-bin), during threading, when the workplace is left unattended and during maintenance work, the machine must be disconnected from the power supply by turning off the on/off switch or removing the plug from the mains!
- Daily maintenance work must only be carried out by appropriately trained persons!
- Repairs and special maintenance work must only be carried out by qualified technical staff or persons with appropriate training!
- During maintenance or repairs on the pneumatic system the machine must be disconnected from the compressed air supply! The only exception to this is when adjustments or function checks are carried out by appropriately trained technical staff!
- Work on the electrical equipment must only be carried out by technical staff who are qualified to do so!
- Work on parts or equipment connected to the power supply is not permitted! The only exceptions to this are specified in regulations EN 50110.
- Conversion or modification of the machine must only be carried out under observation of all relevant safety regulations!

- Only spare parts which have been approved by us are to be used for repairs! We draw special attention to the fact that spare parts and accessories not supplied by us have not been subjected to testing nor approval by us. Fitting and/or use of any such parts may cause negative changes to the design characteristics of the machine. We shall not accept any liability for damage caused by the use of non-original parts.

1.03 Safety symbols



Danger!
Special points to observe.



Danger of injury to operating or technical staff!



Caution

Do not operate without finger guard and safety devices. Before threading, changing bobbin and needle, cleaning etc. switch off main switch.

1.04 Important notes for the user

- This instruction manual belongs to the equipment of the machine and must be available to the operating staff at all times.
  This instruction manual must be read before the machine is operated for the first time.
- Both operating and technical staff must be instructed on the safety devices of the machine and on safe working methods.
- It is the duty of the user to operate the machine in perfect running order only.
- The user must ensure that none of the safety devices are removed nor put out of working order.
- The user must ensure that only authorized persons operate and work on the machine.

For further information please refer to your PFAFF agency.

1.05 Notes for operating and technical staff

1.05.01 Operating staff

Operating staff are the persons responsible for setting up, operating and cleaning the machine and for removing any disturbances in the sewing area.

The operating staff are obliged to observe the following points, and must:

- always observe the notes on safety in this instruction manual!
- avoid using any working methods which adversely effect the safety of the machine!
- avoid wearing loose-fitting clothing or jewelry such as necklaces or rings!
- also ensure that only authorized persons are allowed near the danger area of the machine!
- immediately report to the user any changes to the machine that may affect its safety!

1.05.02 Technical staff

Technical staff are persons who have been trained in electrical engineering, electronics, pneumatics and mechanical engineering. They are responsible for lubricating, servicing, repairing and adjusting the machine.

The technical staff are obliged to observe the following points, and must:

- always observe the notes on safety in this instruction manual!
- switch off the on/off switch before carrying out adjustment and repair work and ensure it cannot be switched on again unintentionally!
- never work on parts or equipment still connected to the power supply! Exceptions to this are only permissible according to regulations EN 50110;
- disconnected the machine from the compressed air supply when carrying out maintenance or repair work on pneumatic equipment!
  Exceptions to this are only permissible for function checks;
- replace all safety covers after carrying out maintenance or repair work!

1.06 Danger warnings

A working area of 1 m must be kept free both in front of and behind the mach-ine, so that easy access is possible at all times.

Never put your hands in the sewing area during sewing!
Danger of injury by the needle!

While setting or adjusting the machine do not leave any objects on the table nor in the needle plate area! Objects may be trapped or slung out of the mach-ine!

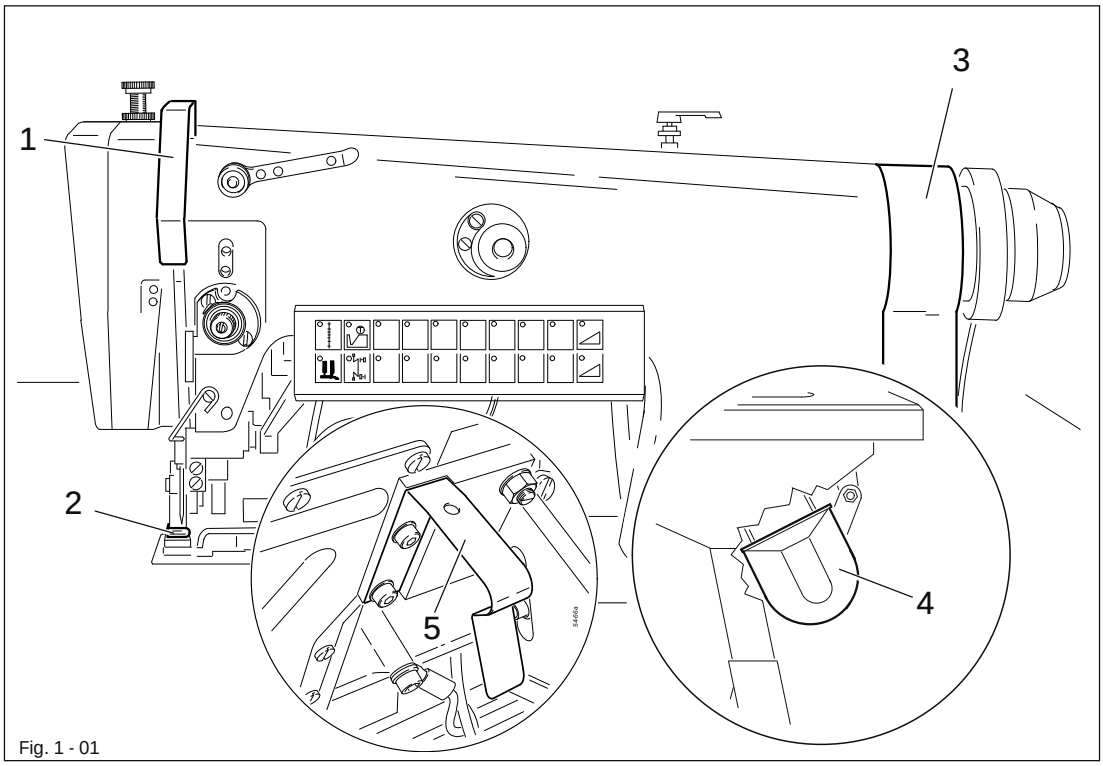

Fig. 1 - 01

Do not operate the machine without take-up lever guard 1!
Danger of injury by movement of take-up lever!

Do not operate the machine without finger guard 2!
Danger of injury by the needle!

Do not operate the machine without belt guards 3 and 4!
Danger of injury by rotating drive belt!

Do not operate the machine without tilt lock 5!
Danger of crushing between the sewing head and table top!

Do not place hands in the cutting area between needle plate and knife!
Danger of injury from the cutting motion of the knife!

2 Proper use

The PFAFF 3822-2/42, -2/44 are integrated workplaces for run-stitching and trimming the edges of jackets, coats and costumes.

Machine type	Equipment
PFAFF 3822-2/42	Edge trimmer and touch-screen control panel
PFAFF 3822-2/44	Edge trimmer for feathered trimming and touch-screen control panel



Any use of these machines which is not approved by the manufacturer shall be considered as improper use! The manufacturer shall not be liable for any damage arising out of improper use! Proper use shall also be considered to include compliance with the operation, adjustment, service and repair measures specified by the manufacturer!

3 Specifications▲

Stitch type: 301

Max. speed
3822-2/42 ..... 4000 s.p.m.$^{-1}$◆
3822-2/44 ..... 3200 s.p.m.$^{-1}$◆

Trimming margin
3822-1/32; -1/42 ..... 5, 6 or 7 mm
3822-1/34; -1/44 ..... 6.5 x 3.5 mm

Stitch length
With fullness setting ”0”: ..... 2.7 mm
With stitch condensation: ..... 1.6 mm

Needle system: ..... 134 KK
Needle size (Nm) in 1/100 mm: 80

Presser foot clearance: ..... 7 mm

Connection data:
Operating voltage: ..... 230 V ± 10%, 50/60 Hz, alternating voltage
Max. power: ..... 400 VA
Fuse protection: ..... 1 x 16 A, inert

Working air pressure: ..... 6 bar
Air consumption (on the Pfaff 3801-3/07 and the PFAFF 3801-3/071): ..... 40 l/work cycle

Noise data:
Emission sound pressure level at the workplace with
a sewing speed of 2400 spm: ..... L_{pA} < 75 dB(A) ■
(Noise measurement in accordance with DIN 45 635-48-A-1, ISO 11204, ISO 3744, ISO 4871)

Machine dimensions:
Length: ..... approx. 1365 mm
Width: ..... approx. 950 mm
Height(with reel stand): ..... approx. 1700 mm

Net weight: ..... approx. 140 kg

▲ Subject to technical alterations

◆ Depending on the material, work operation and stitch length

■ K_{pA} = 2,5 dB

4 Disposal of Machine

- Proper disposal of the machine is the responsibility of the customer.
- The materials used for the machine are steel, aluminium, brass and various plastic materials.
  The electrical equipment comprises plastic materials and copper.
- The machine is to be disposed of according to the locally valid pollution control regulations; if necessary, a specialist ist to be commissioned.



Care must be taken that parts soiled with lubricants are disposed of separately according to the locally valid pollution control regulations!

5 Transportation, packing and storage

5.01 Transportation to customer's premises

All machines are delivered completely packed.

5.02 Transportation inside the customer's premises

The manufacturer cannot be made liable for transportation inside the customer's premises nor to other operating locations. It must be ensured that the machines are only transported in an upright position.

5.03 Disposal of packing materials

The packing materials of this machine comprise paper, cardboard and VCE fibre. Proper disposal of the packing material is the responsibility of the customer.

5.04 Storage

If the machine is not in use, it can be stored as it is for a period of up to six months, but It should be protected against dust and moisture.
If the machine is stored for longer periods, the individual parts, especially the surfaces of moving parts, must be protected against corrosion, e.g. by a film of oil.

6 Explanation of symbols

In this instruction manual, work to be carried out or important information is accentuated by symbols. These symbols have the following meanings:



Note, information



Cleaning, care



Lubrication

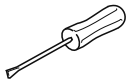

Maintenance, repairs, adjustment, service work
(only to be carried out by technical staff)

7 Controls

7.01 Main switch

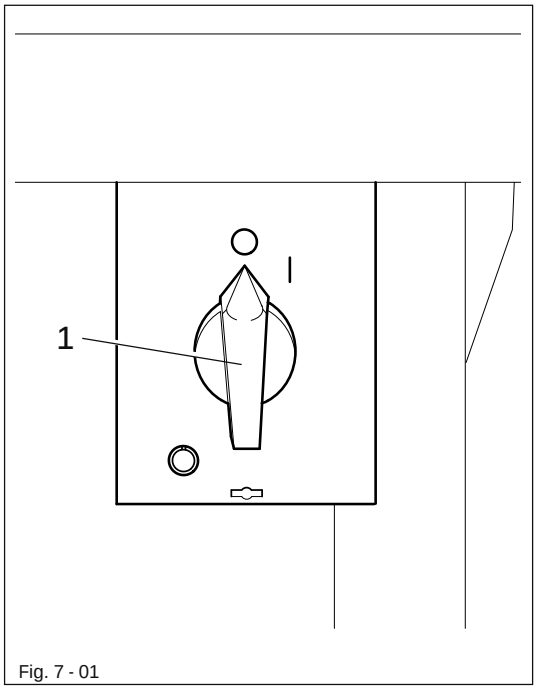

Fig. 7 - 01

- The machine is switched on or off by turning main switch 1.

7.02 Pedal

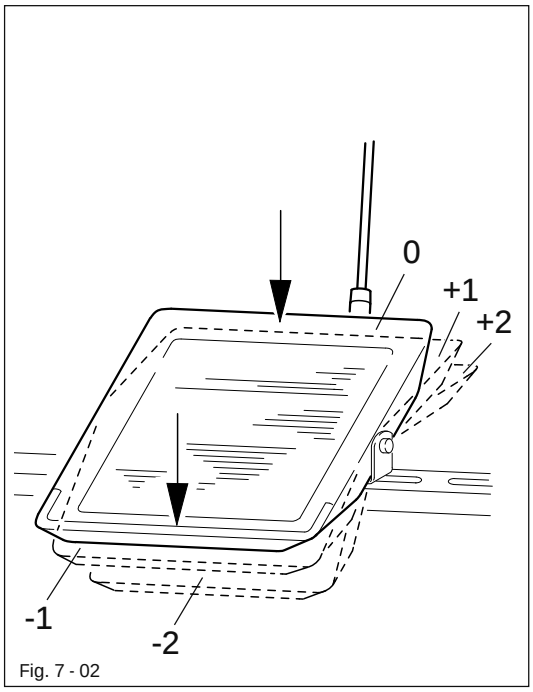

Fig. 7 - 02

0 = Neutral position

+1 = Lower presser foot

+2 = Sewing

-1 = Raise presser foot

-2 = Trim threads

7.03 Presser bar lifter

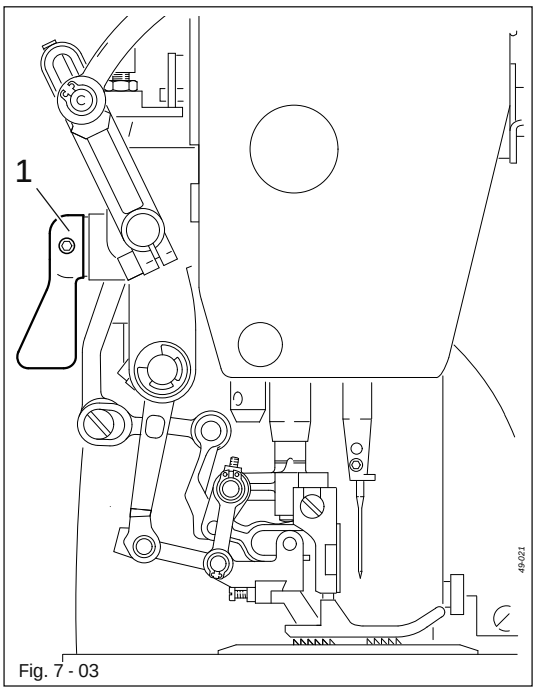

Fig. 7 - 03

- The presser foot is raised by turning lever 1.

7.04 Knee Switch

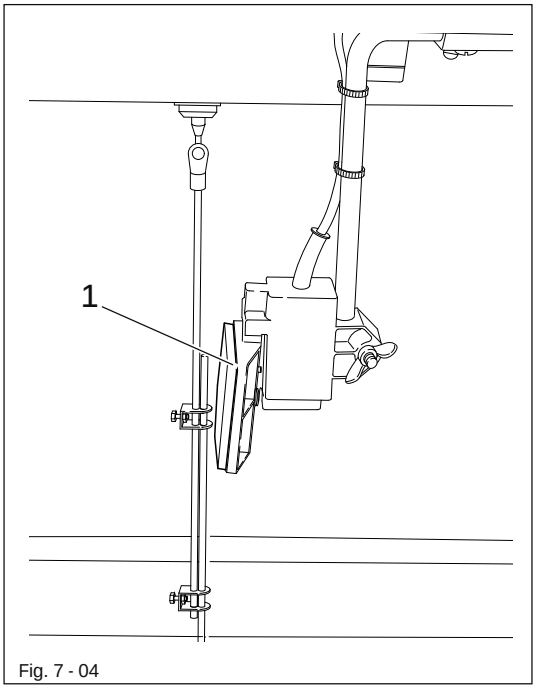

Fig. 7 - 04

Manual sewing:

- By operating knee switch 1 it is possible to alternate between two pre-set amounts of fullness.

Programmed sewing:

- By operating knee switch 1 the amounts of fullness are changed according to the program selected.

7.05 Left knee switch

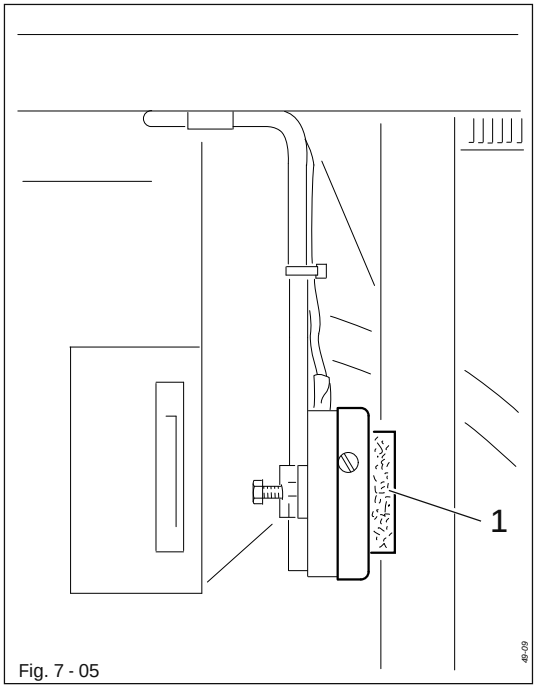

Fig. 7 - 05

- By operating knee switch **1**, the knife for feathered trimming can be switched on or off.

7.06 Control panel

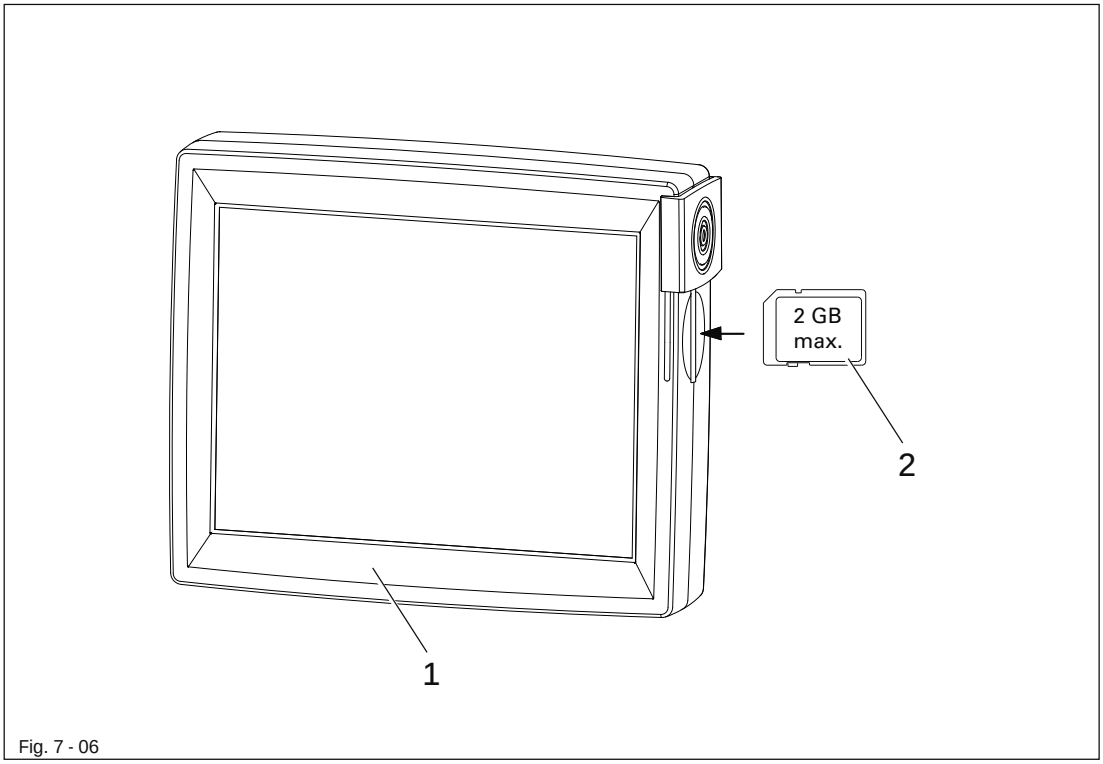

Fig. 7 - 06

The current operating conditions are displayed on control panel 1. Operation takes place in a constant dialogue between the control unit and the operator. For this purpose, depending on the operating condition of the machine, different symbols and/or texts are displayed. If the symbols or texts are framed, these show functions which can be selected by pressing the appropriate position on the monitor. By pressing the corresponding function this is carried out or switched on or off immediately, or a further menu appears, e.g. for entering a value. Activated functions are shown with inverted symbols. Unframed symbols or texts are only used for display purposes and cannot be selected by pressing.
To read sewing programs or install machine software, use the sd-card 2 in the control panel.

Description of the functions

 Normal symbol = function switched off (inactive)

 Inverted symbol = function switched on (active)

7.07 Keyboard

The keyboard 1 is used for the quick operation of the machine during sewing and when selecting the fullness. With the corresponding LED of the 20 keys, active key functions are displayed (Function active = LED lit).

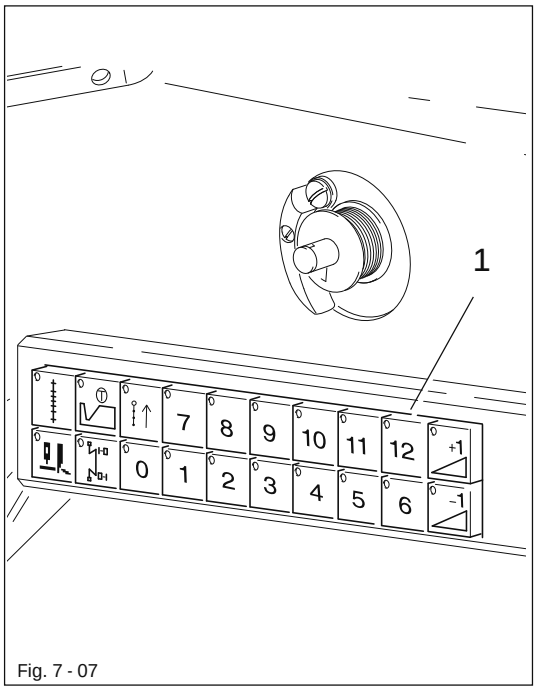

Fig. 7 - 07

Stitch condensation

The stitch condensation is switched on and off by pressing a key. (When programming the seam: Sew the seam section with condensed stitches)

Reverse sewing

Press the key to switch on the reverse sewing function.
(For seam programming: Sew seam section in reverse)

Edge trimming device

The edge trimming device is switched on and off by pressing a key.

Hook knife

- The device for feathered trimming is switched on and off by pressing a key (same function as left knee switch).

Bartack inversion

- Programmed bartacks can be suppressed by pressing a key.

Number keys (0 – 12)

- The previously allocated amount of fullness is called up by pressing a key.
- When two neighbouring number keys are pressed simultaneously, the corresponding average value is selected.

The keyboard is pre-set with the following values:

Key 0:	No fullness will be applied
Key 6:	Selects the max. fullness for the bottom material ply.
Key 12:	Selects the max. fullness for the top material ply.
Key 0 + 1:	Selects the min. fullness for the bottom material ply.
Key 0 + 7:	Selects the min. fullness for the top material ply.

The basic setting is set e.g. after a cold start, see Chapter 13.15 Carry out a cold start.

Correction value + / correction value –

- By pressing a key, the value for the selected fullness is increased or reduced in 2 steps.

8 Mounting and commissioning the machine

The machine must only be mounted and commissioned by qualified personnel! All relevant safety regulations are to be observed!

If the machine is delivered without a table, you must make sure that the frame and the table top which you intend to use can hold the weight of the machine and the motor. It must be ensured that the supporting structure is sufficiently sturdy, including during all sewing operations.

8.01 Mounting

The necessary supply connections for the electrical and pneumatic systems must be available at the machine's location, see Chapter 3 Specifications.
There must be a stable and horizontal surface and adequate lighting at the machine's location.

The method of packaging used requires that the table top be lowered for transport. The following is a description of how to adjust the height of the table top.

8.01.01 Adjusting the table-top height

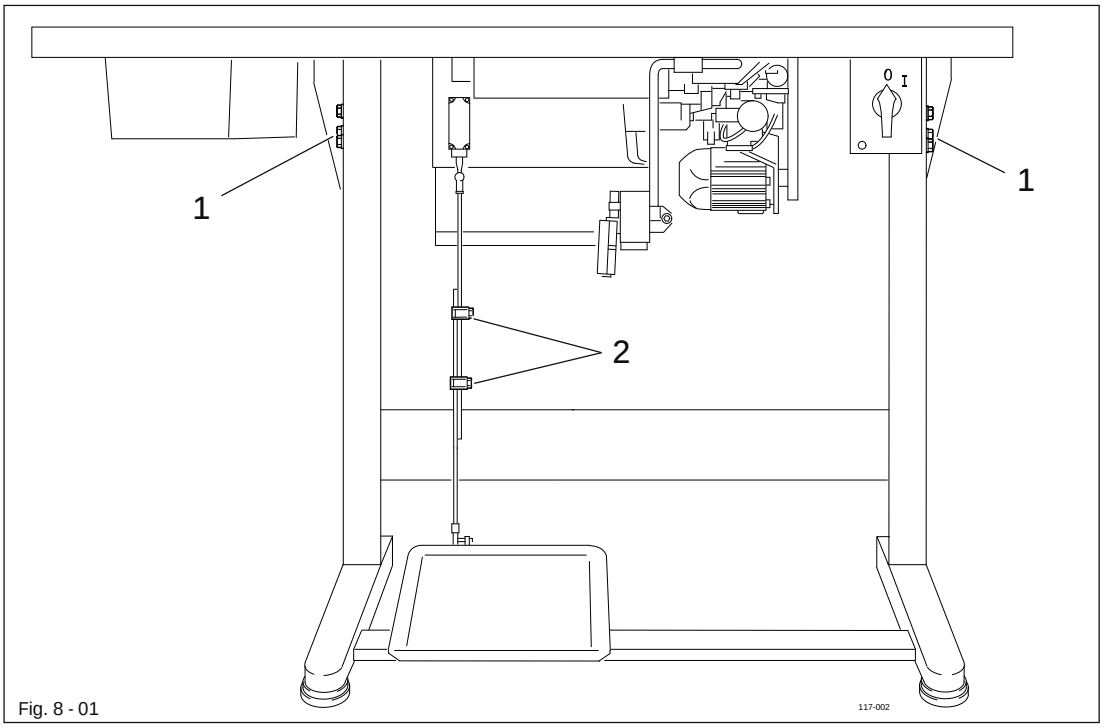

Fig. 8 - 01

- Loosen screws 1 and 2 and set the desired table-top height.
- Tighten screws 1 well.
- Adjust the position of the pedal so that you can operate it comfortably and tighten screw 2.

8.01.02 Tightening the V-belt

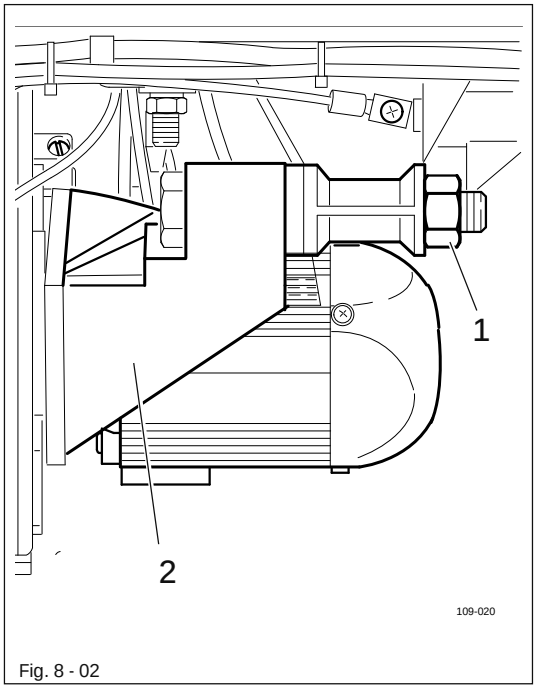

Fig. 8 - 02

- Fit the V-belt.
- Loosen nut 1 and tighten the V-belt by turning motor mounting 2.
- Tighten nut 1.

8.01.03 Fitting the top V-belt guard

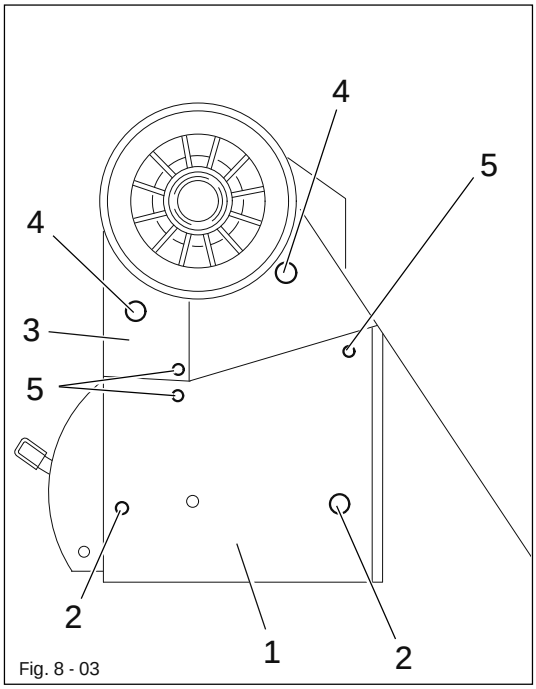

Fig. 8 - 03

- Fasten bottom section of V-belt guard 1 with screws 2.
- Fasten top section of V-belt guard 3 with screws 4.
- Attach belt guard sections 1 and 3 with screws 5.

8.01.04 Mounting the bottom V-belt guard

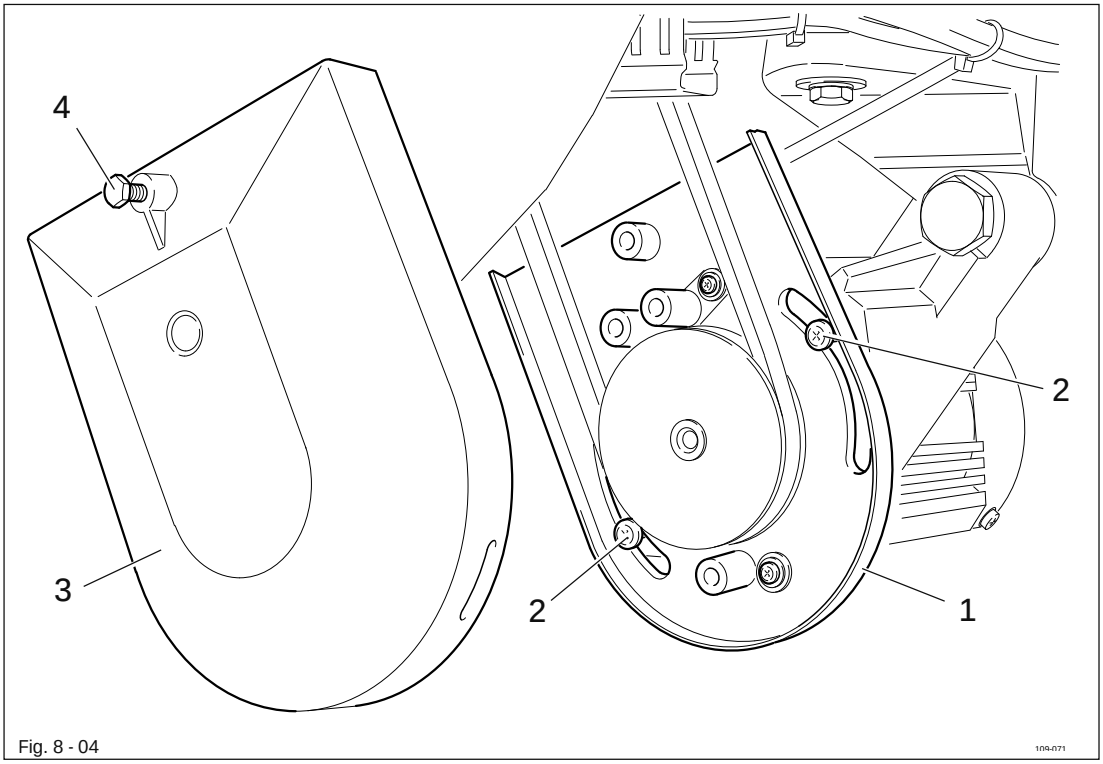

Fig. 8 - 04

- Loosen screws 2 and adjust belt guard support 1 so that the motor pulley and V-belt run freely.
- Tighten screws 2.
- Fasten belt guard 3 with screw 4.

8.01.05 Fitting the synchronizer

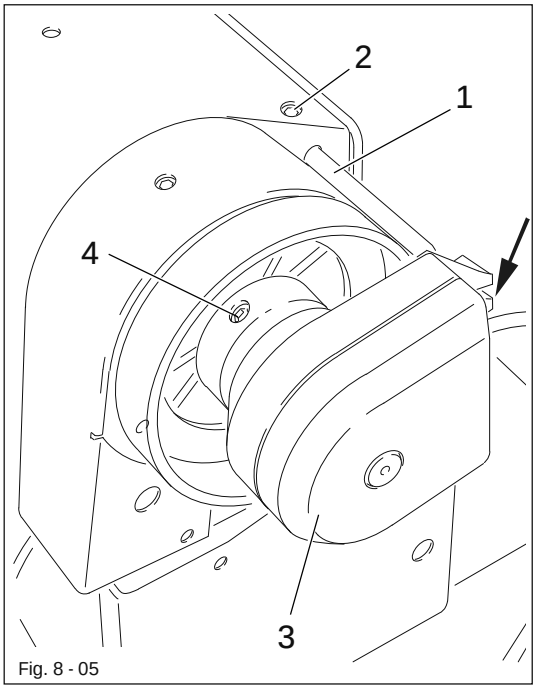

Fig. 8 - 05

- Insert position stop 1 in the machine case and fasten it with screw 2.
- Place synchronizer 3 on the shaft so that stop 1 is in the slot of synchronizer 3, see arrow.
- Tighten screws 4 just a little.
- Insert the plug for the synchronizer in the socket on the control box.
- Adjust synchronizer 3 (see Chapter 13.05.01, Basic position of the machine).

8.01.06 Connecting the plug-in connections and earth cables

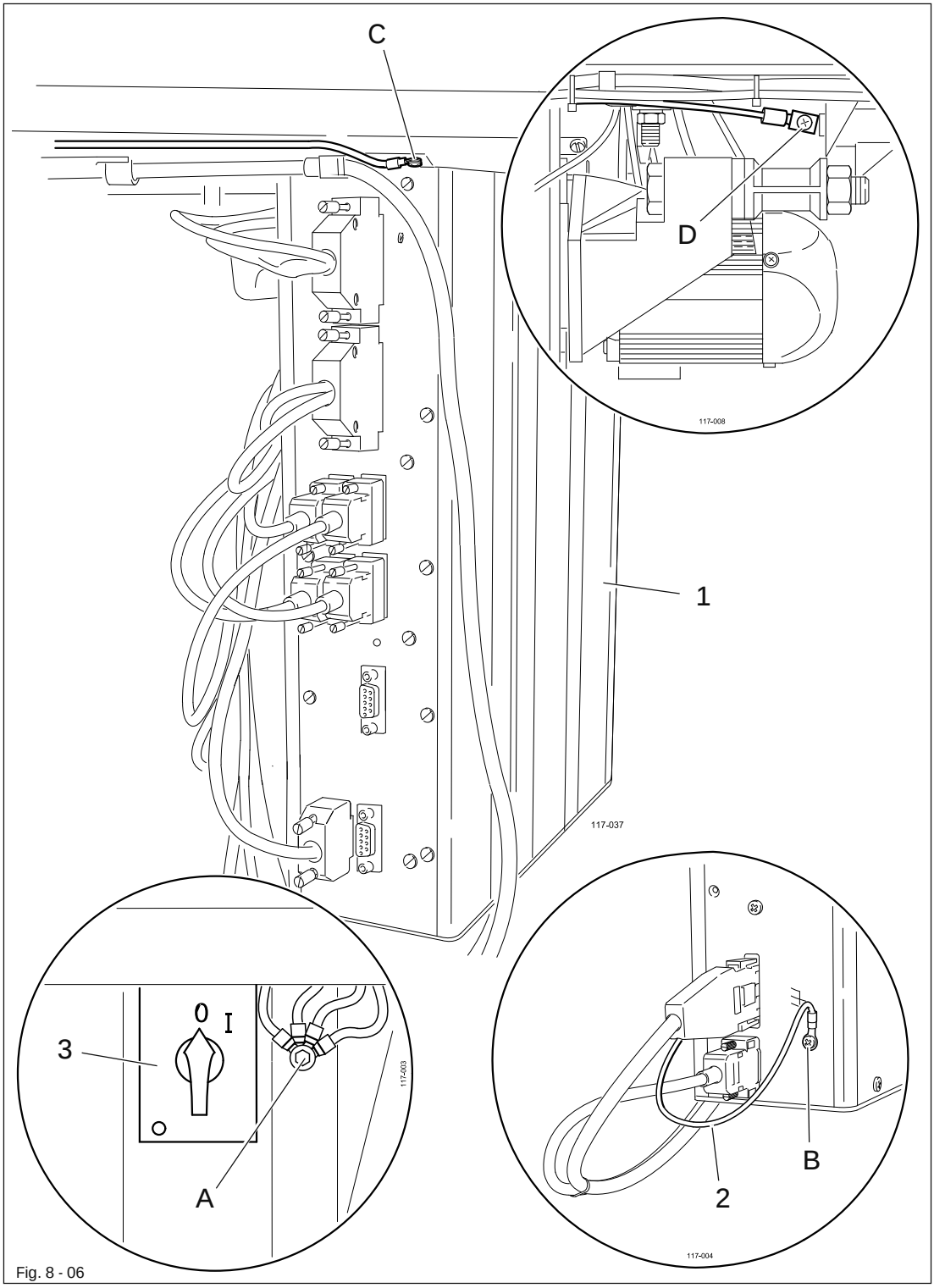

Fig. 8 - 06

- Connect all plugs as labelled in the control box 1.
- Screw the earth cable from the sewing head to earth point A.
- Connect earth point C and earth point A with an earth cable.
- Screw the earth cable from main switch 3 to earth point A.
- Screw the earth cable 2 from the motor to earth point B.

8.01.07 Fitting the reel stand

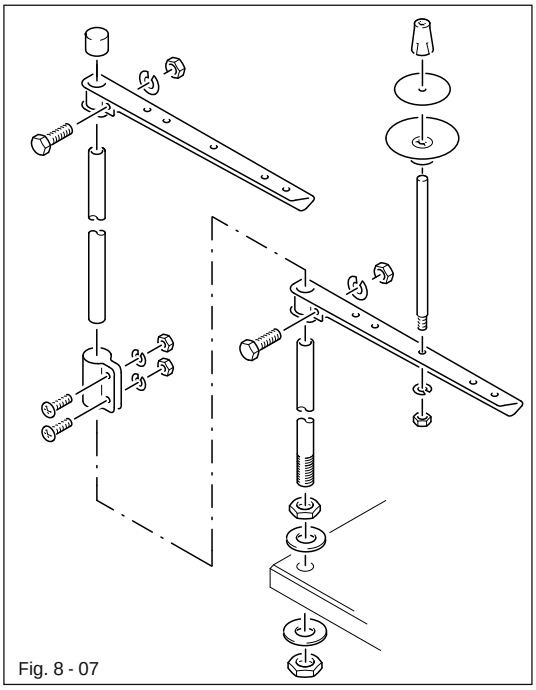

Fig. 8 - 07

- Fit the reel stand as shown in Fig. 8 - 07.
- Afterwards insert the stand in the hole in the table top and secure it with nuts provided.

8.02 Commissioning

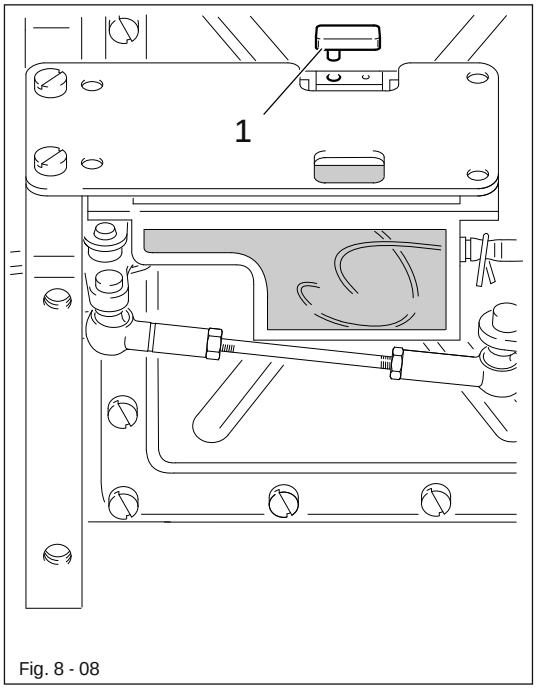

Fig. 8 - 08

Before the machine is commissioned, stopper 1 must be removed!

- Clean the machine thoroughly and then check the oil level (see Chapter 12 Care and Maintenance).
- Check the machine, in particular the electrical leads, for any damage.
- Have specialists check, whether the machine can be operated with the available mains connection.

If there are any irregularities, do not operate the machine under any circumstances!

The machine may only be connected to a grounded socket.

- When the machine is running, the balance wheel must turn towards the operator. If this is not the case, have the motor adjusted by specialist staff, see Chapter 13.09 Parameter settings.
- Connect the machine to the compressed air system. The manometer must display a pressure of 6 bar. If necessary, set to the correct value (see Chapter 12.04 Checking/ regulating air pressure).

8.03 Switching the machine on/off

- Switch the machine on or off, see Chapter 7.01 On/off switch.
- Carry out a test run.

9 Preparation

All regulations and instructions in this Instruction Manual are to be observed! Special attention is to be paid to the safety regulations!

All preparation work is only to be carried out by appropriately trained personnel. Before all preparation work, the machine is to be separated from the electricity supply by removing the plug from the mains or switching off the On/Off switch!

9.01 Inserting the needle

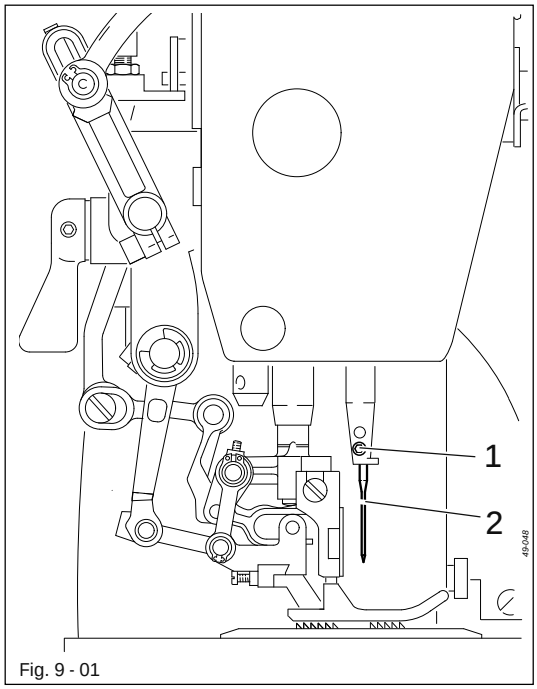

Fig. 9 - 01

Switch off the machine! Danger of injury by unintentional starting of the machine!

Only use needles from the system intended for the machine, see Chapter 3 Specifications.

- Raise the needle bar to its highest position.
- Loosen screw 1.
- Insert the needle 2 in the needle bar as far as it will go (The long needle groove must be pointing left – as seen in the direction of sewing.)
- Tighten screw 1.

9.02 Winding the bobbin thread, adjusting the thread tension

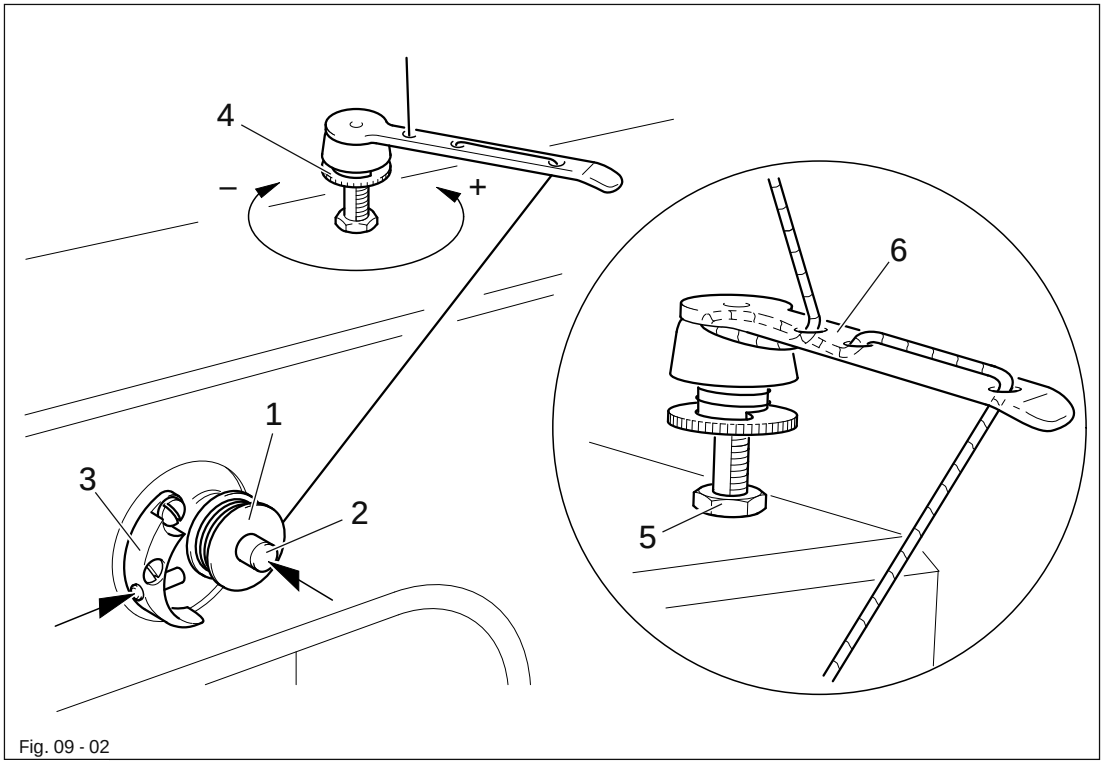

Fig. 09 - 02

- Place the empty bobbin 1 onto the bobbin winder spindle 2.
- Thread the thread in accordance with Fig. 09-02 and wind it a few times around bobbin 1 in a clockwise direction.
- Switch the bobbin winder on by pushing the bobbin winder spindle 2 and lever 3 simultaneously.

The bobbin is wound during sewing.

- The tension of the thread on bobbin 1 can be adjusted using milled screw 4.
- The bobbin winder stops automatically when bobbin 1 is full.

If the thread is wound irregularly:

- Loosen nut 5.
- Turn thread guide 6 accordingly.
- Tighten nut 5.

9.03 Removing/inserting the bobbin case

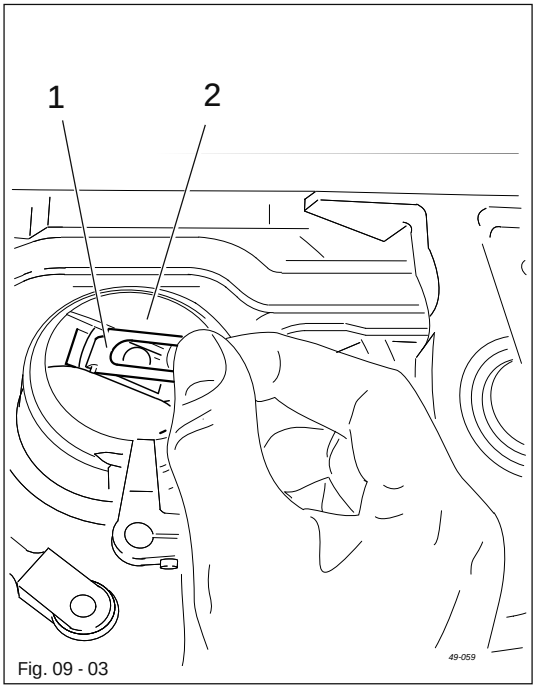

Fig. 09 - 03

Switch off the machine!
Danger of injury if the machine is started accidentally!

Removing the bobbin case.

- Lift clip 1 and remove bobbin case 2.

Inserting the bobbin case:

- Insert bobbin case 1 until you feel it click into place.

9.04 Threading the bobbin case, adjusting the thread tension

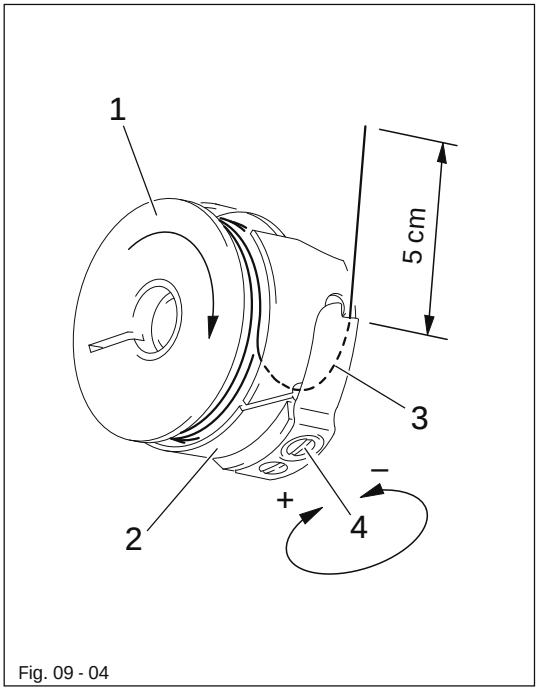

Fig. 09 - 04

- Insert bobbin 1 into bobbin case 2.
- Guide the thread through the slot under spring 3.
- Adjust the thread tension by turning screw 4.

When the thread is pulled the bobbin 1 must rotate in the direction of the arrow.

9.05 Threading the needle thread

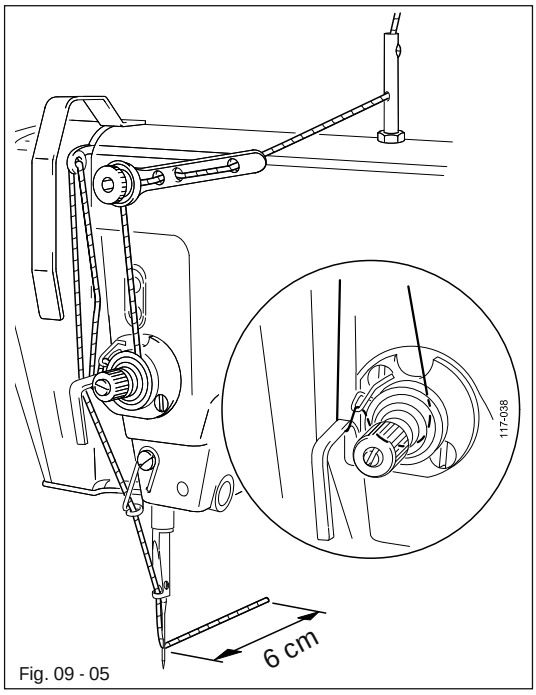

Fig. 09 - 05



Switch off the machine!
Danger of injury if the machine is started accidentally!

- Thread the needle thread in accordance with Fig. 09-05.

9.06 Adjusting the needle-thread tension

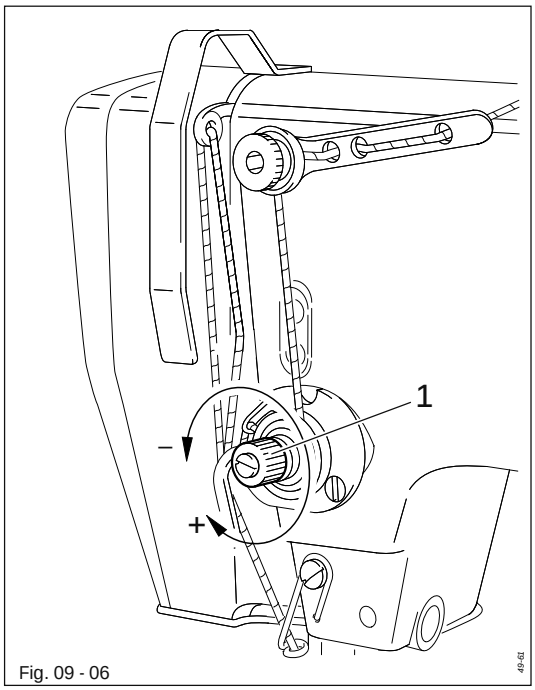

Fig. 09 - 06

- Adjust the needle-thread tension by turning milled screw 1.

9.07 Selecting the program number

- Switch on the machine.
- Call up the program number input menu.



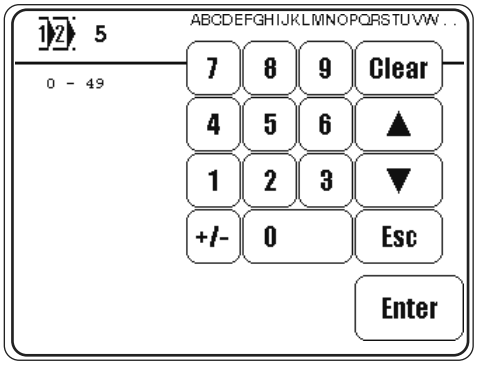

- Select the desired program number.



- Confirm the selection and quit the selection menu.

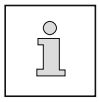

The sewing method is determined by the program number selected, see Chapter 10 Sewing.

Program number 0:	Manual sewing
Program number 1 and 2:	Sewing with fixed programs
Program number 3 to 49:	Programmed sewing

9.08 Inputting fullness

- Switch on the machine.



- Call up the program number input menu.

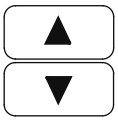

- Select program number "0".



- Confirm the selection and quit the selection menu.

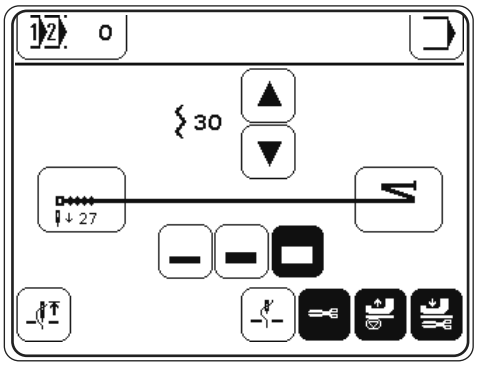

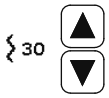

- Enter the desired value with the appropriate arrow keys.

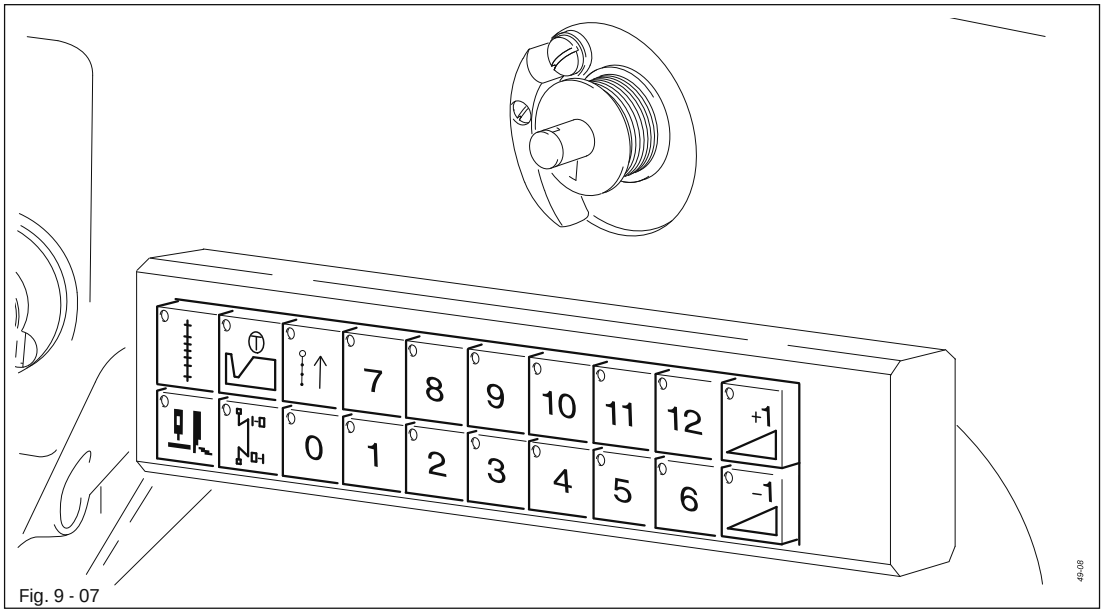

Fig. 9 - 07

- If necessary, allocate the current fullness amount to one of the number keys (0-12) on the keyboard. To do so, press the required key until a beep is heard.

9.09 Entering / altering the code number

- Switch on the machine.

- Call up the input mode.

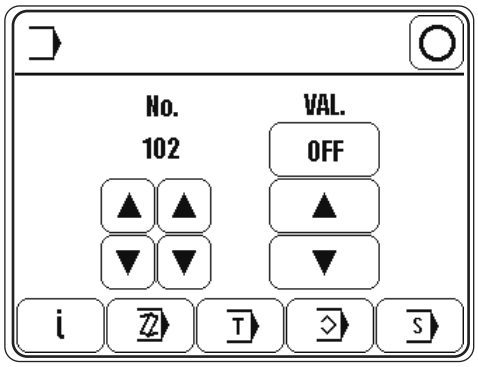

- Select parameter "800".

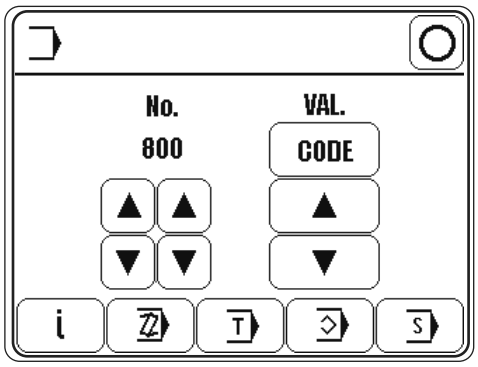

CODE

- Select the code number input menu.
- Enter the code number on the number keys (factory code setting is "3800").

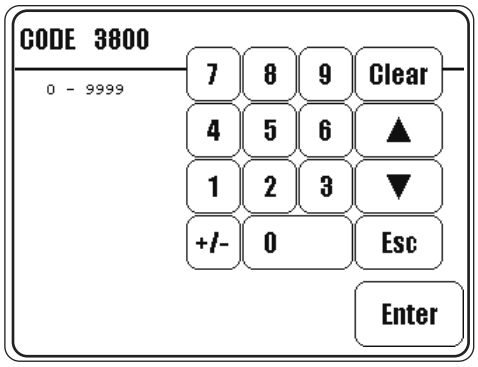

Enter ● Take over the code number entered.

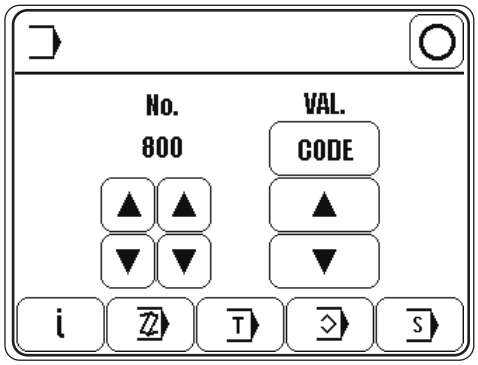

The code input remains stored until the machine is switched off at the main switch. As long as the machine is not switched off, all parameters are freely accessible without having to enter the code number again.

▲▲ ▼▼ ● Select parameter "810"

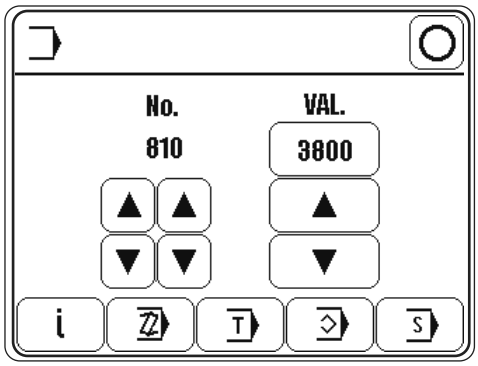

3800 ● Call up the code number input menu and enter the desired code number.

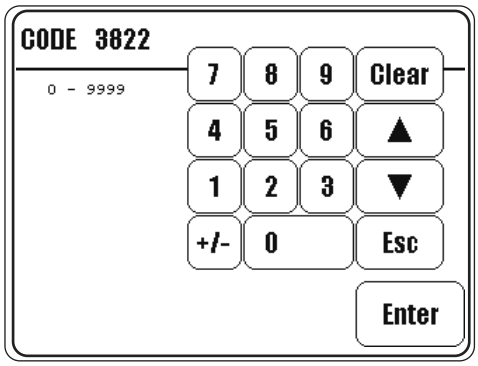

Enter ● Take over the new code number.

○ ● Conclude input.

Do not forget the code!
Without the appropriate code, the protected functions cannot be called up!
Help is then only possible through PFAFF service staff.

9.10 Adjusting the control panel

- Switch on the machine.



- Call up the input mode.

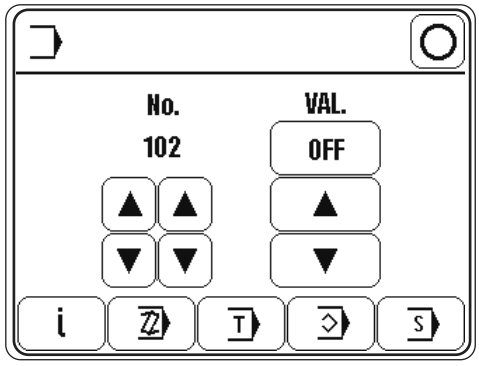



- Select the service menu.

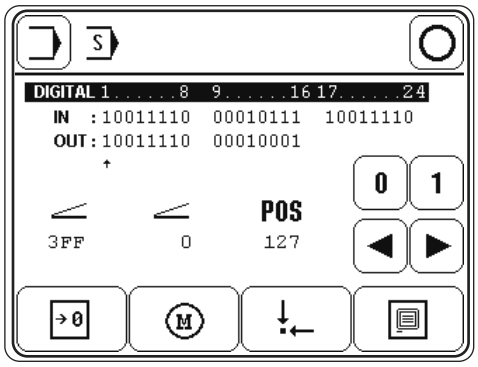



- Select control panel functions.

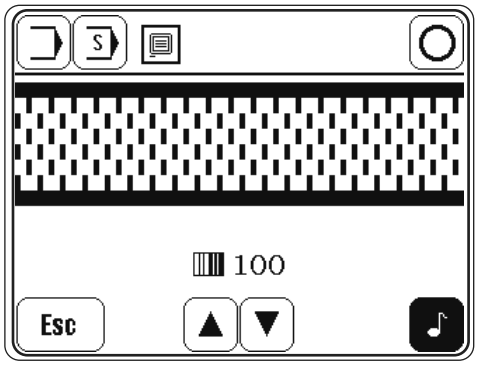



- Change the display contrast.



- Switch the key tone off or on.



Never reduce the display contrast to the extent, that the display can no longer be read!

10 Sewing

In the sewing mode all relevant settings for the sewing operation are displayed on the screen and can be altered with the corresponding functions.
In the sewing mode a difference is made between manual sewing, sewing with fixed programs and programmed sewing.
The selection is made with the corresponding program number:

0:	Manual sewing
1 and 2:	Sewing with fixed programs
3 to 49:	Programmed sewing (with up to 15 seam sections for both the left and right seam)

10.01 Manual sewing

In the manual sewing mode the values for fullness and the stitch placement position are shown on the display when sewing starts, and like the functions at the beginning and end of the seam, the material type and the needle and sewing foot positions, can be changed directly with the appropriate function.



- Switch on the machine and select program number "0", see Chapter 9.07 Selecting the program number.

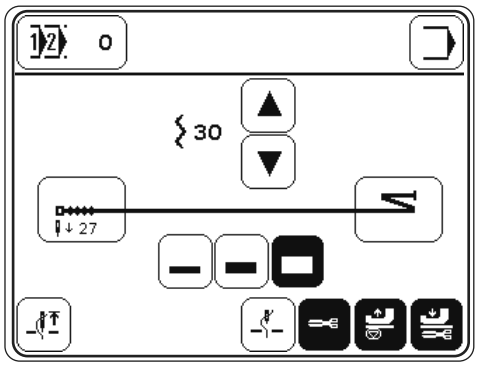

Explanation of the functions



Program selection
This opens the menu for entering the program number, see Chapter 9.07 Selecting the program number.



Input mode
Exit the sewing mode and select the input mode.



Fullness
Alters the value for fullness, see Chapter 9.08 Inputting fullness



Seam start
Opens the menu for entering the functions at the beginning of the seam, see Chapter 10.01.01 Entering the seam start and seam end functions in the manual sewing mode.



Seam end

Opens the menu for entering the functions at the end of the seam, see Chapter 10.01.01 Entering the seam start and seam end functions in the manual sewing mode.



Material type

These functions are used for selecting the type of material, see Chapter 10.01.02 Selecting the material type.



Needle raised

Moves the needle to its highest position



Needle position raised

When this function is activated, the needle moves to its highest position after sewing stops.



Thread trimming

- when the function is activated, enables thread trimming with the pedal function (optional).
- when the function is activated, the edge knife can be switched off with the pedal function, see Chapter 7.02 Pedal.

Sewing foot raised



When this function is activated, the sewing foot is raised after sewing stops.

Sewing foot lowered after the edge knife has been switched off



When the function is activated, the sewing foot is not raised after the edge knife has been switched off.

- Sewing is carried out with the pedal functions, see Chapter 7.02 Pedal.

10.01.01 Entering the seam start and seam end in manual sewing mode

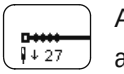

After calling up the appropriate function, the menu for entering the placement stitch function appears. To begin with the condensed stitches function is not activated.



- If necessary, switch off the condensed stitches function

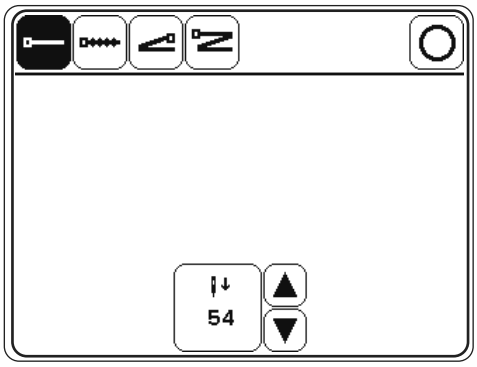

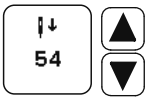

- If necessary, switch on the placement stitch function and alter the value for the placement stitch (using the number panel or arrow keys).



- Switch on the condensed stitches function and call up the menu for entering the values.

or



- Switch on the single start backtack function and call up the menu for entering the values.

or



- Switch on the double start backtack function and call up the menu for entering the values.



- In each case change the number of stitches for the condensed stitches or the number of backtack stitches with the appropriate arrow keys.



- Change the value for the maximum speed during the condensed stitches or backtacking operation.



- Select whether the condensed stitches or backtacking operation should be carried out at a fixed speed (standard symbol) or at a pedal-controlled speed (inverse symbol).



- Conclude the input.



In the manual sewing mode, the functions for the seam end are entered in the same way as those for the seam start (without placement stitch).

10.01.02 Selecting the material type

To achieve equal results (fullness amounts) when sewing different materials, in the manual sewing mode and when working with fixed programs, it is possible to choose between 3 different types of material at any time:


Light materials


Medium materials


Heavy materials

The symbol of the present material type selected is shown as an inverse symbol.

10.02 Sewing with fixed programs

Fixed programs are stored under the program numbers **1** and **2**.
The fixed programs are used for the quick and easy production of seams with different amounts of fullness. When sewing with fixed programs, 2 or 3 seam sections are sewn after each other. With the knee switch it is possible to move to the next section. The fixed programs are designed as cyclic running programs, i.e. at the end of the last seam section, the machine moves back to the first seam section. The fullness value can be set for each seam section, the settings for the stitch placement position and for the needle and sewing foot positions apply to all sections and can be changed at any time with the corresponding function..



- Switch on the machine and select program number "1" or "2", see Chapter 9.07 Selecting the program number.

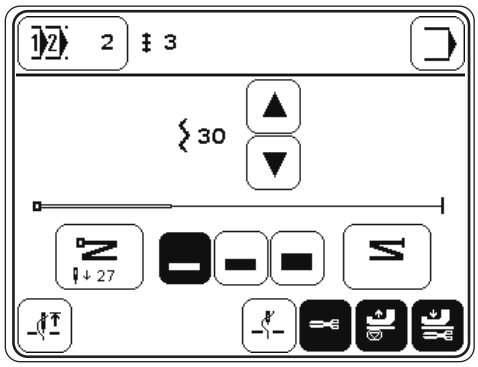

Explanation of the displays and functions



Program selection
This opens the menu for entering the program number, see Chapter 9.07 Selecting the program number.



Seam section
Shows the number of seam sections in the sewing program.



Input mode
Exit the sewing mode and select the input mode.

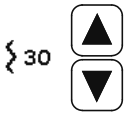

Fullness
Alters the fullness value, see Chapter 9.08 Inputting fullness.



Seam start
Opens the menu for entering the functions at the beginning of the seam, see Chapter 10.01.01 Entering the seam start and seam end functions in the manual sewing mode.



Seam end
Opens the menu for entering the functions at the end of the seam, see Chapter 10.01.01 Entering the seam start and seam end functions in the manual sewing mode.



Material type
These functions are used to select the material type, see 10.01.02 Selecting the material type.



Needle raised
Moves the needle to its highest position



Needle position raised
When this function is activated, the needle moves to its highest position after sewing stops.



Thread trimming
- when the function is activated, enables thread trimming with the pedal function (optional).
- when the function is activated, the edge knife can be switched off with the pedal function, see Chapter 7.02 Pedal.



Sewing foot raised
When this function is activated, the sewing foot is raised after sewing stops.



Sewing foot lowered after the edge knife has been switched off
When the function is activated, the sewing foot is not raised after the edge knife has been switched off.

- Sewing is carried out with the pedal and knee switch functions, see Chapter 7.02 Pedal or 7.04 Knee switch and 7.05 Left knee switch.

10.03 Programmed sewing

With the program numbers 3 – 49 it is possible to call up previously programmed seams. In programmed sewing all seam sections for pre-gathering a sleeve are set in one seam program. The information about the seam program, such as program number, number of programmed seam sections, programmed comments is displayed.
For better orientation a seam sketch is shown with the programmed seam sections. The seam start, seam end, the seam sections already sewn, the current seam section and the seam sections still to be sewn are illustrated by symbols and different types of lines with different thicknesses. For the current seam section the corresponding parameters for seam section number, fullness with fullness adjustment and the number of stitches (length of seam section) are displayed. The material typ and other functions can be altered directly.

- Switch on the machine, select the desired program number from "3" to "49", see Chapter 9.07 Selecting the program number.

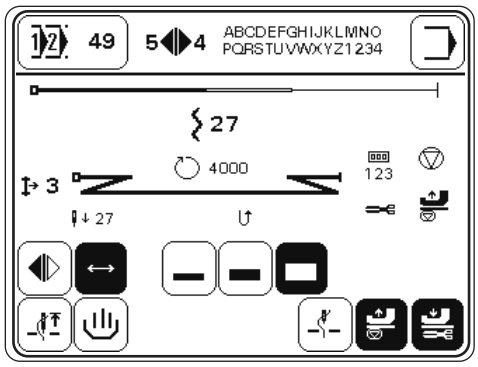

Explanation of the displays and functions

Program selection
This opens the menu for entering the program number, see Chapter 9.07 Selecting the program number.

5 5 Seam section right/left
Shows the number of seam sections in the seam program for the right/left sleeve seam.

Input mode
Exit the sewing mode and select the input mode.

27 Fullness
Shows the current fullness value.

3 Current seam section
Shows the current seam section.

27 Placement stitch
Shows the current placement stitch value.



Current seam

This function is used to select and display the current sleeve seam (right/left).



Automatic seam change

When this function is activated, the machine changes automatically from the right to left sleeve seam.



Material type

These functions are used to select the material type, see 10.01.02 Selecting the material type.



Needle raised

Moves the needle to its highest position



Program interruption

Interrupts the program sequence, see Chapter 10.03.01 Program interruption



Thread trimming

- when the function is activated, enables thread trimming with the pedal function (optional).
- when the function is activated, the edge knife can be switched off with the pedal function, see Chapter 7.02 Pedal.



Sewing foot raised

When this function is activated, the sewing foot is raised after sewing stops.



Sewing foot lowered after thread trimming

When this function is activated, the sewing foot is not raised after thread trimming.

- Sewing is carried out with the pedal and knee switch functions, see Chapter 7.02 Pedal or 7.04 Knee switch and 7.05 Left knee switch.

10.03.01 Program interruption

With the "program interruption" function the programmed seam sequence is interrupted (e.g. if the thread breaks).

- Interrupt program sequence.

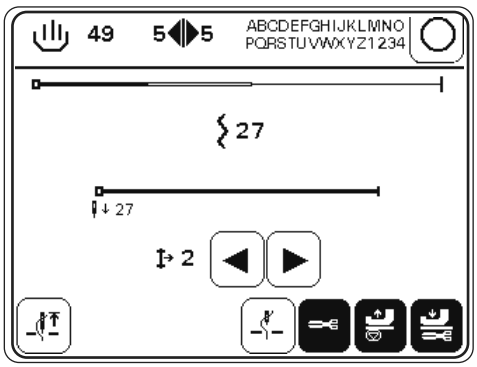

2 - If necessary, tact forwards or backwards through the sections of the seam program.

- If necessary, change the values and carry out the other functions as in manual sewing, see Chapter 10.01 Manual sewing.

- If necessary, call up programmed sewing again..

10.04 Error messages

If an error occurs, the text "ERROR" appears on the display, together with an error code. An error message is caused by incorrect settings, defective elements or seam programs and by overload conditions.
For an explanation of the error codes see Chapter 13.11 Explanation of the error messages.

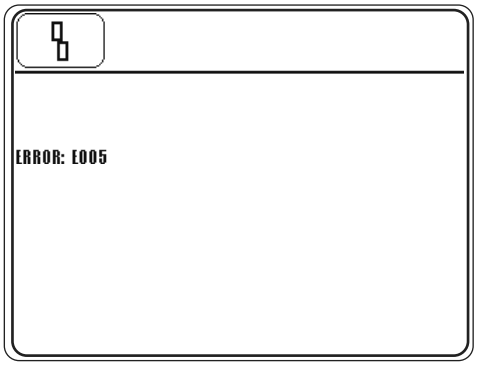

- Eliminate the error.

- Confirm error elimination.

11 Input

In the input mode the functions parameter input, information, creating/adjusting a sewing program, teach-in, program administration and service are available.

- Switch on the machine.
- Call up the input mode.

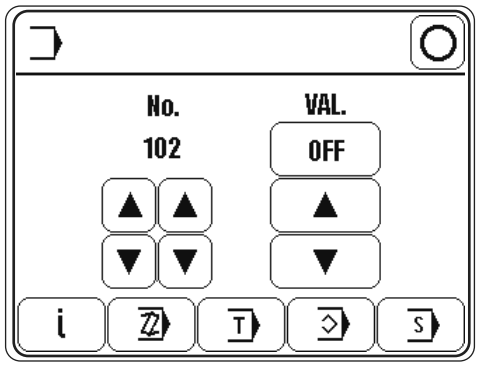

Explanation of the functions

Sewing mode
Quit the input mode and call up the sewing mode.

Parameter selection
Select the hundred and unit figures of the desired parameters, see Chapter 13.09.02 Example of a parameter input.

Altering the parameter value
Change the value of the selected parameter, see Chapter 13.09.02 Example of a parameter input.

Software information
Calls up information about the current machine software.

Creating/adjusting a program
Opens the menu for entering or altering a seam program, see Chapter 11.01.02 Seam program input with the "Creating/adjusting a program" function.

Teach In
Opens the menu for entering seam programs after sewing a sample, see Chapter 11.01.04 Seam program input with the "Teach in" function.

Program administration
Opens the menu for seam program administration, see Chapter 11.03 Seam program administration.

Service
Opens the service menu, see Chapter 13.14 Service menu.

11.01 Seam program input

Seam programs can be created by entering parameters in the "Creating/adjusting a seam program" function, or by sewing a sample with the "Teach in" function.
Irrespective of which function is being used, first of all it is necessary to select the program number and the basic settings of the seam program, which is to be sewn.

11.01.01 Basic settings for seam program input

The basic settings in the "creating/adjusting a program" and the "teach-in" functions are the same.

- Switch on the machine.



- Call up the input mode.



- Call up the "Creating/adjusting a seam program" or the "Teach in" function.

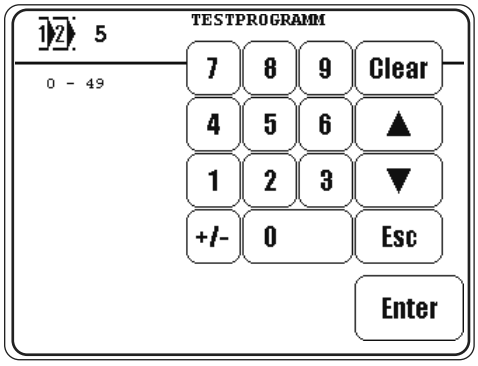

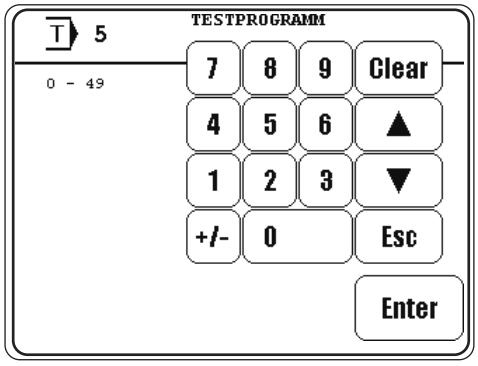



- If necessary, change the selected program number and confirm the selection.

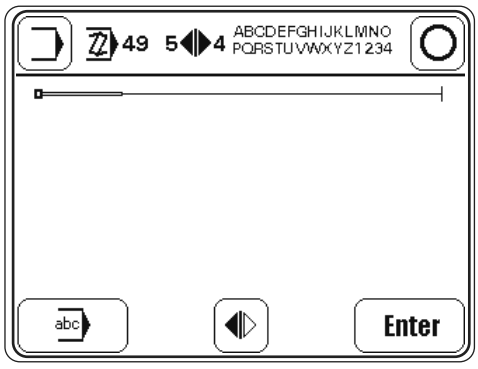



- If applicable, enter or change a comment.



- Set the seam type (by pressing the appropriate symbol several times until the appropriate seam type is displayed).
  Description of the symbols:

   Sewing program with left and right seam, beginning with the right seam.

   Sewing program with left seam only.

   Sewing program with right seam only.

   Sewing program with left and right seam, beginning with the left seam.



- Conclude the input of the basic settings and change to the seam section input, see Chapter 11.01.02 Seam program input with the "Creating/adjusting a program" function or Chapter 11.01.04 Seam program input with the "Teach in" function.





The input can also be concluded by calling up the sewing mode. In this case the seam program input is concluded and the machine changes to programmed sewing.

11.01.02 Seam program input with the "Creating/adjusting a program" function

With this function the seam program is entered by entering or changing the appropriate values on the control panel. This type of seam program input is particularly suitable for adjusting existing seam programs.

- Switch on the machine.



- Call up the input mode.



- Call up the "creating/adjusting a program" function.



- Carry out the basic settings and conclude with the "Enter" function, see Chapter 11.01.01 Basic settings for seam program input.

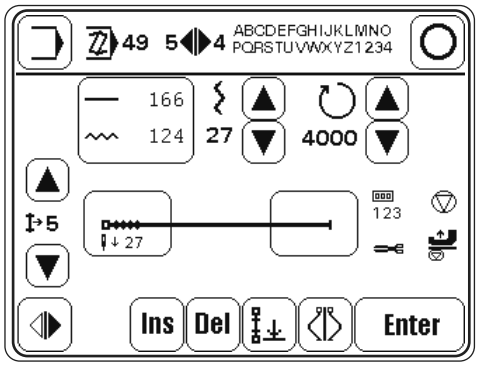

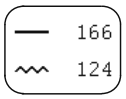

- Alter the actual and required length of the seam, see Chapter 11.01.03 Entering the actual and the required length of the seam section.



- Alter the fullness, see Chapter 9.08 Inputting fullness.

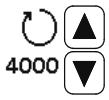

- Alter the maximum speed for the current seam section.

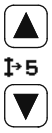

- These functions are used to scroll through the current seam program.
  The current seam section is displayed accordingly, in addition to all the other current values.



- Enter the seam start functions, see Chapter 10.01.01 Entering the seam start and seam end in manual sewing mode.



- Enter the functions for the end of the seam section, see Chapter 11.01.06 Entering the end of the seam section when programming the seam.



- Select a seam type.
  It is only possible to select the right or left seam, if the seam type "right and left seam" was selected in the basic setting, see Chapter 11.01.01 Basic settings for seam program input.



- If necessary, use the keyboard to switch on the condensed stitches function for the current seam section, see Chapter 7.07 Keyboard.



- If necessary switch on the reverse sewing function for the current seam section using the keyboard, see Chapter 7.07 Keyboard.



- If necessary, insert the seam section.
  The current seam section is copied and all following seam sections are set one place back.



- If necessary, delete the current seam section.



- If necessary, conclude the input of the current seam and store the parameter for the other seam in the reverse order (mirror seam).

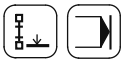

- Set the seam end or program end.
  If entering only one seam (only the right or only the left sleeve seam) the program end is set in the desired seam section.
  In the same way as the program end, the seam end is set when entering the right and left sleeve seam. The seam end is set in the first sleeve seam and the program end in the second sleeve seam.



- Conclude the input of the first seam section and change to the next seam section.



- Conclude the input and change to the input of the basic settings.



- Conclude the input and change to programmed sewing.

11.01.03 Entering the actual and required length of the seam section

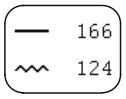

After the corresponding function has been called up, the menu for entering the seam length values (in mm) of the current seam section appears. After the input of the values for the actual and required length, the number of stitches and the fullness amount are calculated. A subsequent alteration of the fullness amount or the number of stitches also alters the values for the actual and required length.

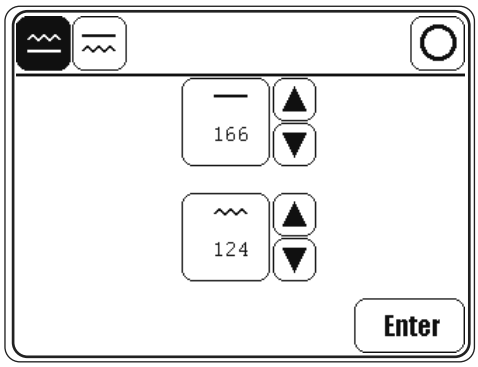

First of all it is necessary to select the material ply to be gathered:



- Select the bottom ply (fullness < 0).

or



- Select the top ply (fullness> 0).

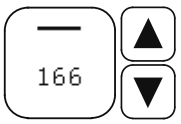

- Alter the value for the actual length (using the number panel or arrow keys).

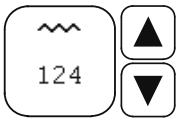

- Alter the value for the required length (using the number panel or arrow keys).



- Conclude the input.

11.01.04 Seam program input with the "Creating/adjusting a program" function

With this function the seam program is entered by sewing a sample. A new program is always created, i.e. if an existing program is selected, this will be overwritten.

- Switch on the machine.



- Call up the input mode.



- Call up the "teach-in" function.



- Carry out the basic settings and conclude with the "Enter" function, see Chapter 11.01.01 Basic settings for seam program input.

Before sewing starts the following displays and functions appear on the screen.

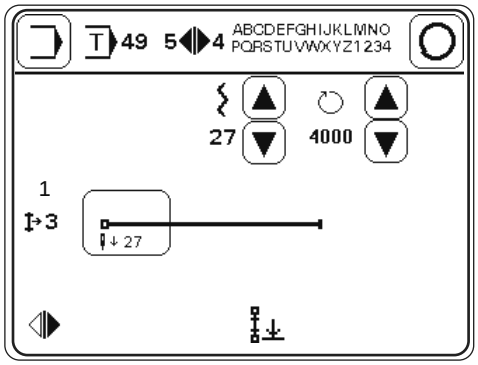



- Enter the functions for the seam start, see Chapter 10.01.01 Entering the seam start and seam end in the manual sewing mode.



- Enter the fullness, see Chapter 9.08 Inputting fullness.



- Enter the maximum speed for the current seam section.



- If necessary, use the keyboard to switch on the condensed stitches function for the current seam section, see Chapter 7.07 Keyboard.



- If necessary switch on the reverse sewing function for the current seam section using the keyboard, see Chapter 7.07 Keyboard.

- Sew the first seam section using the pedal function.
  The number of stitches in the current seam section is counted and shown on the display.

After sewing starts, the following displays and functions are shown on the screen.

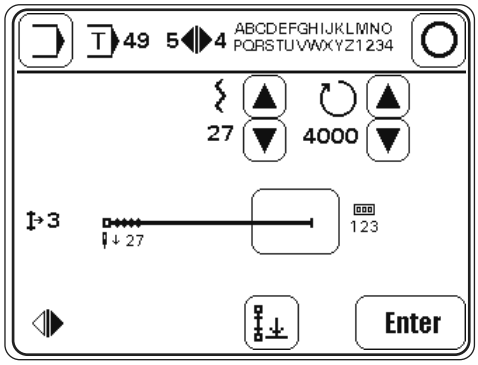

Enter

- By pressing Enter the seam section end is defined by stitch counting.
- By operating the pedal in position "-2", the seam section is ended by pedal operation, see Chapter 7.02 Pedal.
- By operating the knee switch, the seam section is ended by knee switch operation, see Chapter 7.04 Knee switch.

- After the function has been called up, additional inputs can be made for the seam section end or incorrect inputs can be corrected, see Chapter 11.01.05 End of seam section input during seam programming.

Condensed stitches defined during the input of the functions for the end of the seam section, will be carried out after the seam program input has been concluded. Up to 30 stitches will be sewn! Danger of injury in the needle area!

- Set the seam end or program end.
  If entering only one seam (only the right or only the left seam) the program end is set in the desired seam section.
  In the same way as the program end, the seam end is set when entering the right and left seam. The seam end is set in the first seam and the program end in the second seam.

Enter

- Conclude the input.
- Conclude the input and change to the input of the basic settings.
- Conclude the input and change to programmed sewing.

11.01.05 Entering the functions at the beginning of the seam during seam programming



After the appropriate function has been called up, the menu for entering the value of the placement stitch appears. To begin with the condensed stitches function is not activated.



- If necessary, switch off the condensed stitches function.

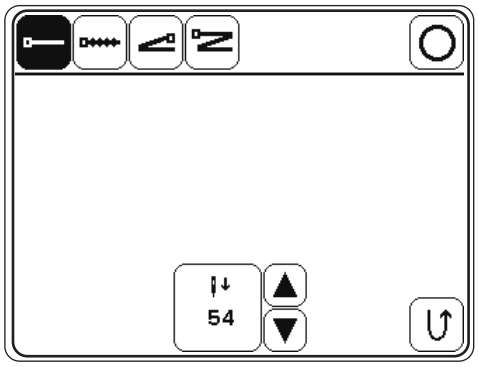

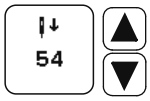

- If necessary, switch on the placement stitch function and alter the value for the placement stitch (using the number panel or arrow keys).



- Switch on the condensed stitches function and call up the menu for entering the values.

or



- Switch on the single start backtack function and call up the menu for entering the values.

or



- Switch on the double start backtack function and call up the menu for entering the values.



- In each case change the number of stitches for the condensed stitches or the number of backtack stitches with the appropriate arrow keys.



- Change the value for the maximum speed during the condensed stitches or backtacking operation.



- Select whether the condensed stitches or backtacking operation should be carried out at a fixed speed (standard symbol) or at a pedal-controlled speed (inverse symbol).



- If necessary, sew the seam section in reverse (with activated function).



- Conclude the input.

11.01.06 Entering the functions at the end of seam section during seam programming



After the appropriate function has been called up, the menu for entering the functions and values for the end of the seam section without condensed stitches appears.



- If necessary, switch off the condensed stitches function.

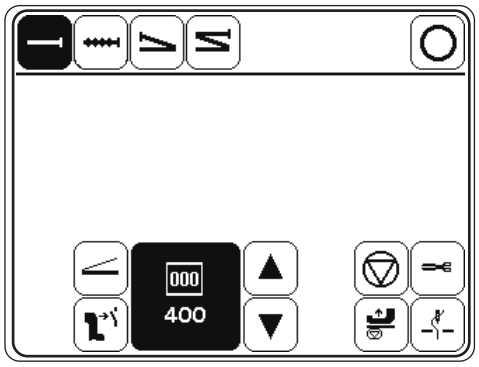



- Switch on the condensed stitches function and call up the menu for entering the values.

or



- Switch on the single end backtack function and call up the menu for entering the values.

or



- Switch on the double end backtack function and call up the menu for entering the values.



- In each case change the number of stitches for the condensed stitches or the number of backtack stitches with the appropriate arrow keys.



- Change the value for the maximum speed during the condensed stitches or backtacking operation.



- Switch the function for changing to the next seam section by pedal on or off.



- Switch the function for changing to the next seam section by knee switch on or off.

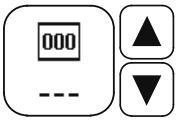

- Enter or change (with the number keys or arrow keys) the number of stitches for the seam section.



- Execute or do not execute the automatic sewing stop function at the end of the seam section.



- Switch the "sewing foot raised" function on or off, see Chapter 10.01 Manual Sewing.



- Switch the "thread trimming" function on or off, see Chapter 10.01 Manual Sewing.



- Switch the "needle raised" function on or off, see Chapter 10.01 Manual Sewing.



- Conclude the input and change to programmed sewing.



It is not possible to set every combination of functions.
All the activated functions are shown as inverse symbols.

11.02 Examples of how to create a seam program

11.02.01 Example of a seam program input with the "creating/adjusting a program" function

The seam program to be created for a jacket front part should

- have 6 seam sections and
- be stored under the program number "4" with the comment "PROG".

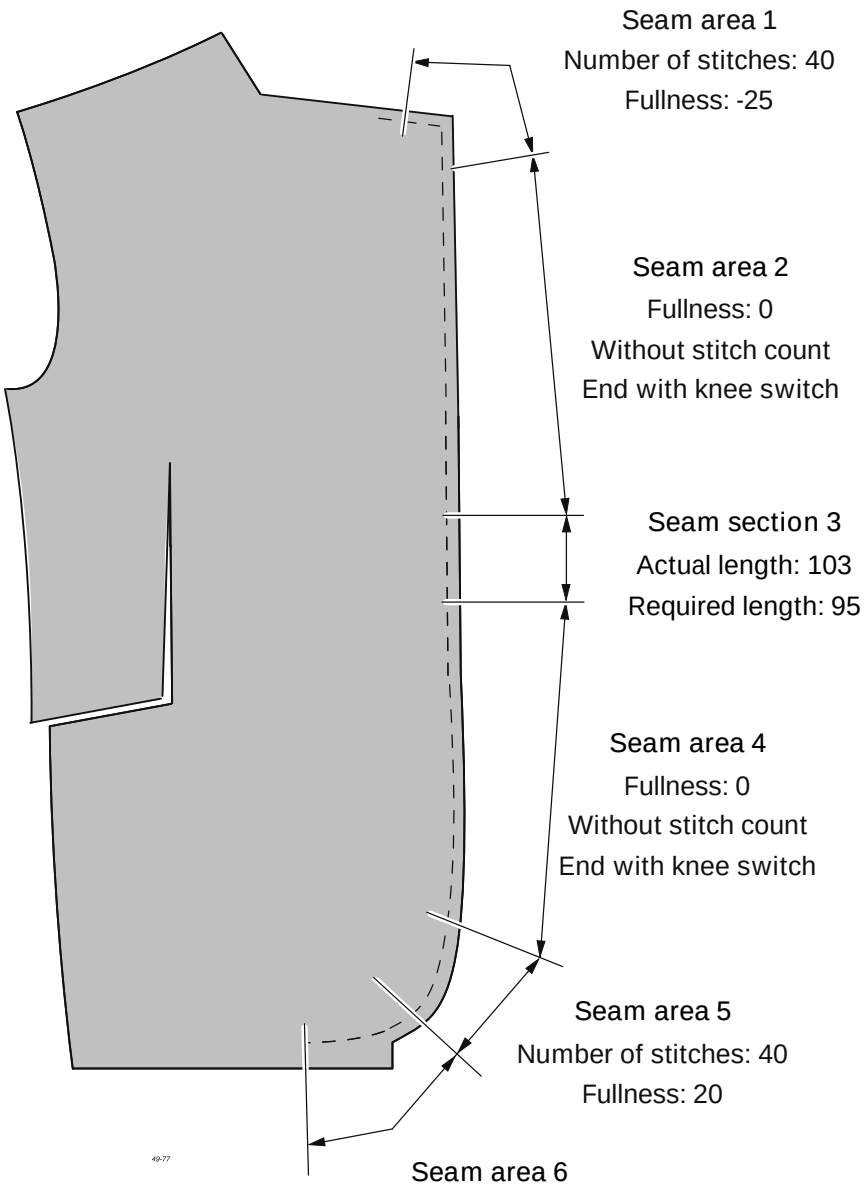

- Switch on the machine.



- Call up the input mode.



- Call up the "creating/adjusting a seam program" function and enter program number "4".

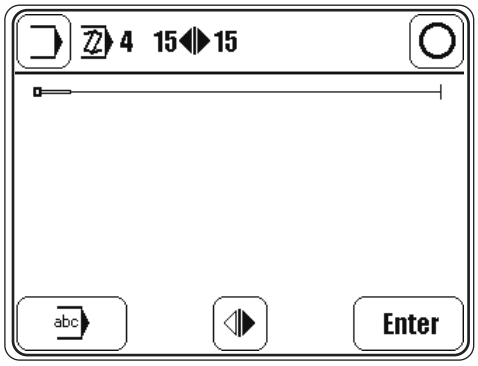



- Set the seam type (right seam) by pressing until the appropriate symbol appears.



- Call up the menu for comment input.
- Enter the comment "PROG" with the keyboard and number panel.



- Conclude the comment input.



- Change to the input of the first seam section.

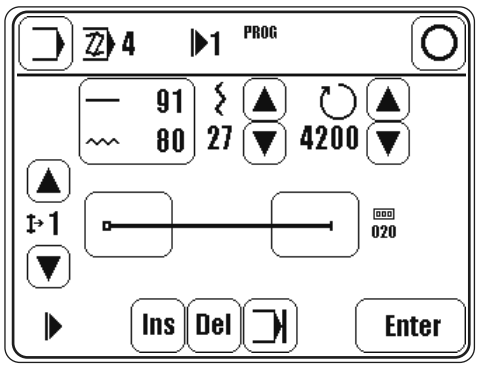



- Enter the value "-25" for the fullness.



- Call up the menu for the input of the end of the seam section.

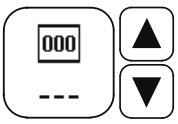

- Switch on the stitch count function to change to the next seam section, and set value "40" for the number of stitches.

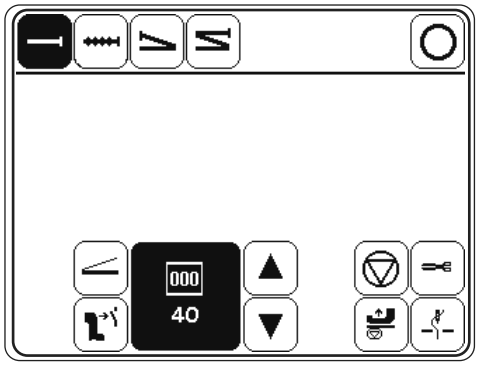

- Conclude the input of the end of the seam section.

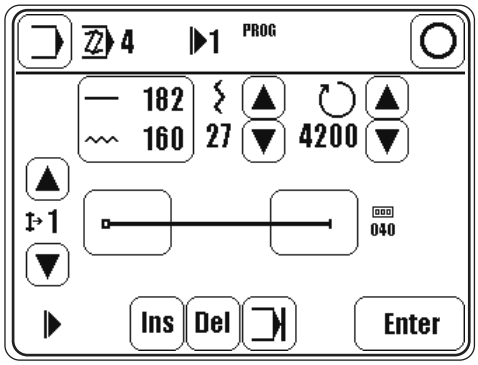

Enter
- Change to the input of the second seam section.

27
- Enter the value "0" for the fullness.

- Call up the menu for entering the functions at the end of the seam section.

- Switch on the function for changing to the next seam section with the knee switch.

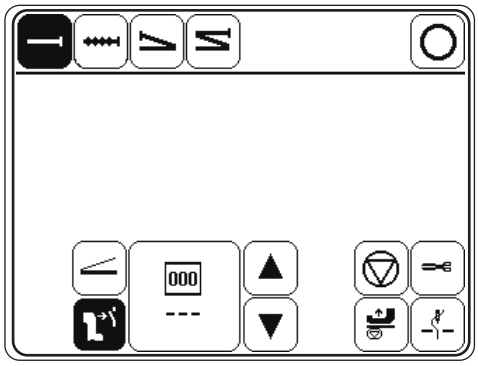

- Conclude the input of the end of the seam section.

Enter
- Change to the input of the third seam section.



- Call up the menu for entering the required/actual length of the seam section.

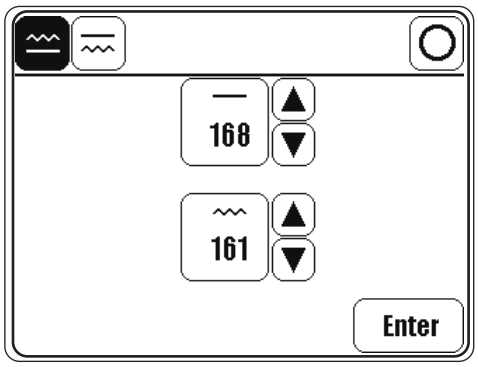



- Gather bottom material ply (fullness < 0).

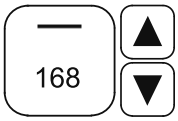

- Enter the value "103" for the actual length.

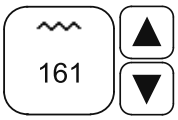

- Enter the value "95" for the required length.

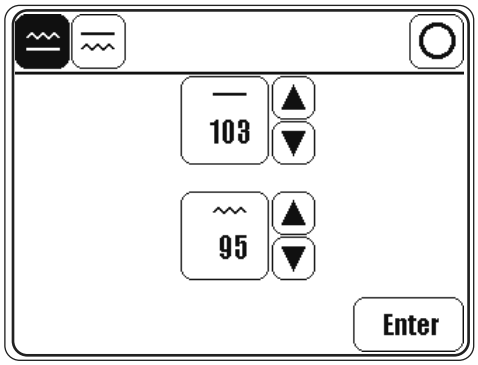



- Conclude the input of the required/actual length.

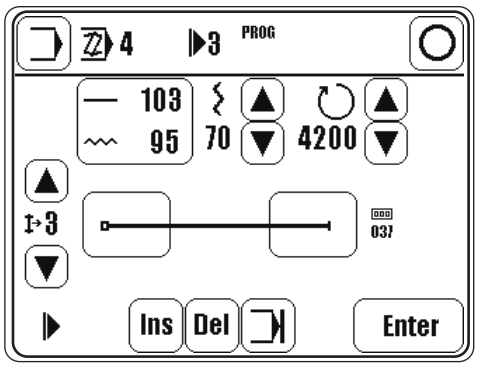



The number of stitches ("37") and the value for the fullness ("70") are calculated from the values entered. As this calculation is based on whole stitches, the value for the required length ("141") differs slightly from the value entered.



● Change to the input of the fourth seam section.



● Enter the value "0" for the fullness.



● Call up the menu for entering the end of the seam section.



● Switch on the function for changing to the next seam section with the knee switch.



● Conclude the input of the end of the seam section.



● Change to the input of the fifth seam section.



● Enter the value"-25" for the fullness.



● Call up the menu for entering the functions at the end of the seam section.

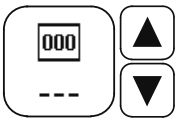

● Switch on the stitch count function to change to the next seam section, and set value "40" for the number of stitches.



● Conclude the input of the end of the seam section.



● Change to the input of the sixth seam section.



● Enter the value "0" for the fullness.



● Call up the menu for entering the end of the seam section.



● Switch on the function for changing to the next seam section by pedal.



● Switch on the "thread trimming" function.



● Switch on the "sewing foot raised" function.



● Conclude the input.

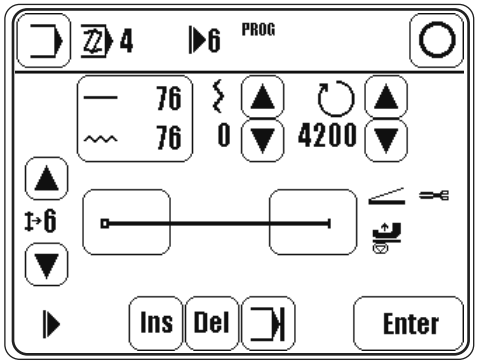

- Activate the "end of program" function.

- Conclude the seam program input and change to programmed sewing

11.02.02 Example of a seam program input using the "teach-in" function

The seam program to be created for a jacket front part should

- have 6 seam sections and
- be stored under the program number "11" with the comment "TEACH".

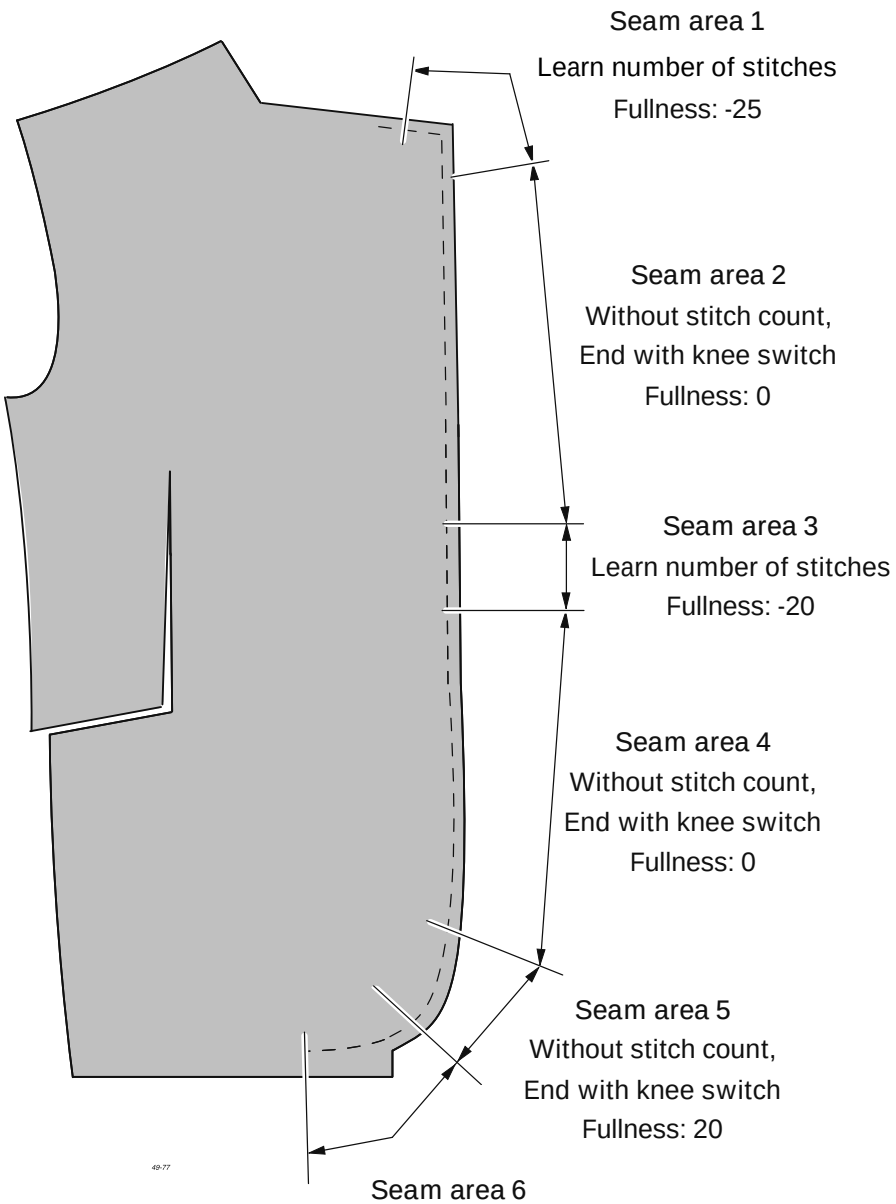

- Switch on the machine.



- Call up the input mode.



- Call up the "teach-in" function and enter program number "11".

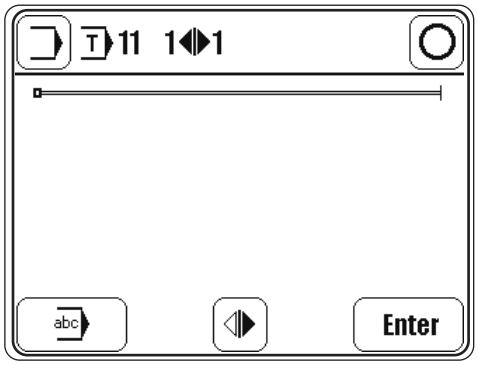



- Set the seam type (only left seam) by pressing until the appropriate symbol appears.



- Call up the menu for comment input.
- Enter the comment "TEACH" with the keyboard and number panel.



- Conclude the comment input.



- Change to the input of the first seam section.

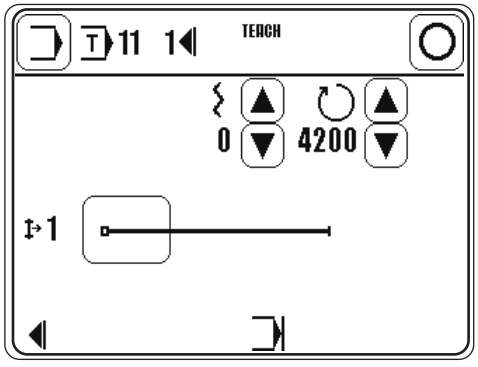



- If necessary, enter the value "0" for fullness.
- Sew the first seam section using the pedal function.

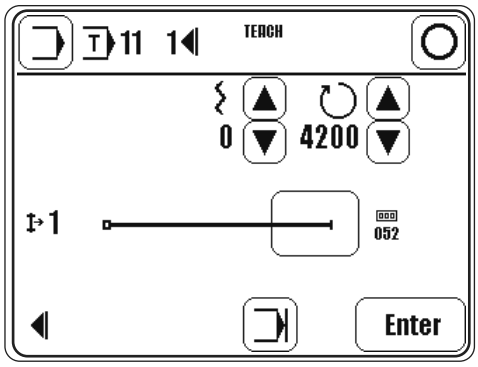

Enter ● Change to the input of the second seam section.

0 ● Enter the value "0" for the fullness.

● Call up the menu for entering the end of the seam section.

● Switch on the function for changing to the next seam section by knee switch.

● Conclude the input of the end of the seam section

● Use the pedal function to sew the second seam section.

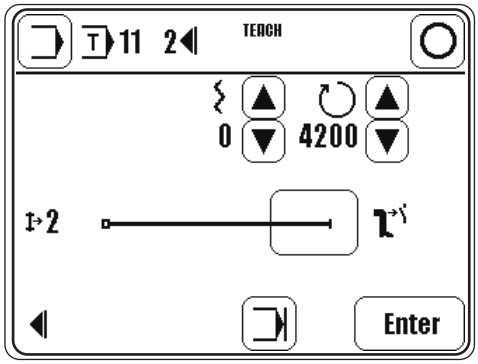

Enter ● Change to the input of the third seam section.

30 ● Enter the value "-20" for the fullness.

● Use the pedal function to sew the third seam section.

Enter ● Change to the input of the fourth seam section.



- Enter the value "0" for the fullness.



- Call up the menu for entering the end of the seam section.



- Switch on the function for changing to the next seam section by knee switch.



- Conclude the input of the end of the seam section

- Use the pedal function to sew the fourth seam section.



- Change to the input of the fifth seam section.



- Enter the value "20" for the fullness.

- Use the pedal function to sew the fifth seam section.

- Set the end of the seam section with the right knee switch, see Chapter 7.04 Right knee switch.



- Change to the input of the sixth seam section.



- Enter the value "0" for the fullness.

- Use the pedal function to sew the sixth seam section.

- Set the end of the seam section with the pedal position "-2", see Chapter 7.02 Pedal.

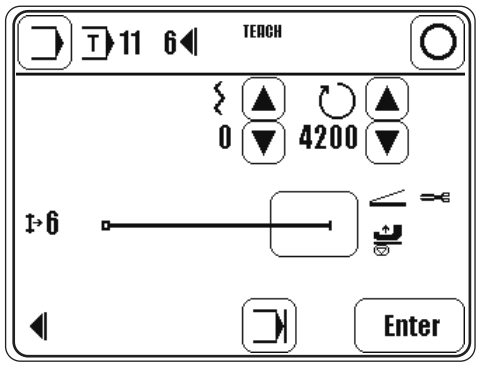



- Activate the "end of program" function.



When the seam program input is concluded, the thread trimming operation is carried out automatically!



- Conclude the seam program input and change to programmed sewing.

11.03 Seam program administration

In the program administration the seam programs deposited in the machine memory and the SD-Card can be deleted and copied. The left side of the display shows the programs in machine memory. The right side of the display shows the programs on the SD-Card. Selected programs are red marked. With the MDAT-function the machine configuration can be copied or deleted. The Format-function formats the SD-Card. Further actions are shown in a dialog window.
After SD-Card insertion it takes up to 20s until the card is detected.

- Switch on the machine.



- Call up the input mode.



- Call up program administration.
  Read SD-Card and machine memory again.

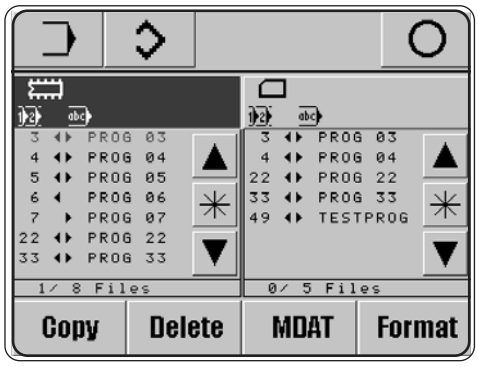

Explanation of the functions



Input mode
Calls up the basic display for the input mode.



Sewing mode
Quit input mode and call up sewing mode.



Program selection
After the program administration has been selected, at least one seam program is always marked. Using the arrow functions, the desired seam program can be selected. With the *-function and the arrow functions a seam program block can be marked. By pressing the *.function again, the block function is deactivated.



Copy
Selected seam programs are copied from/to SD-Card.



Delete
Selected seam programs are deleted.

Dialog window

The dialog window shows questions and additional buttons for the answers.

Enter button



Enter button

Yes for one seam program.



All button

Yes for one or all marked seam programs.



Esc button

No for one or all marked seam programs.



Next button

No for one seam program.



Machine configuration

With the MDAT-function the machine configuration can be copied to/from SD-Card or can be deleted on the SD-Card (filename: MDAT).



Format SD-Card

The Format-function formats the SD-Card.

If the SD-Card is not readable, it is new formatted. If the SD-Card is readable and the directory \P3822 for the 3822-machine exists then all seam programs and the machine configuration (MDAT) are deleted in this directory.

If the directory \P3822 for the 3822-machine does not exist, only the directory \P3822 is created. So all other files and directories on the SD-Card are not corrupted.

It is recommended to use SD-Cards with a maximum capacity of 2 GB.

12 Care and Maintenance

Clean hook compartment	daily, several times if in continuous use
Clean the entire machine	once a week
Check the oil level	once a month
Lubricate the articulated joints of the top feed	once a week
Check/adjust the air pressure	daily, before use
Clean air filter of air filter/regulator	as required

These maintenance intervals are calculated for the average running time of a single shift operation. If the machine is operated for longer periods, shorter maintenance intervals are recommended.

12.01 Cleaning the machine

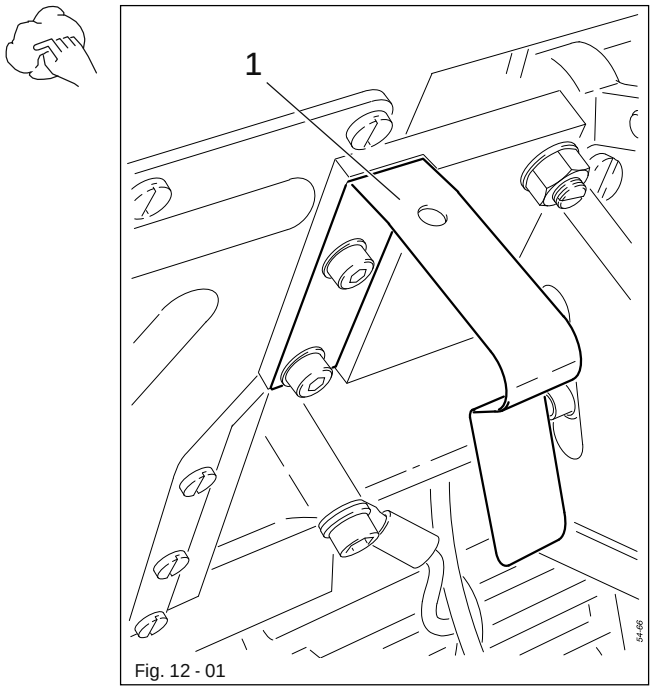

Fig. 12 - 01

Switch off the machine!
Danger of injury if the machine is started accidentally!

- Tilt sewing head backwards.
- Clean the entire hook and hook compartment daily, more often if the machine is in continuous use.
- When returning the machine to an upright position, make sure that tilt lock 1 is pressed.

Use both hands to set the machine upright!
Danger of crushing between the sewing head and table top!

12.02 Oil level of the machine

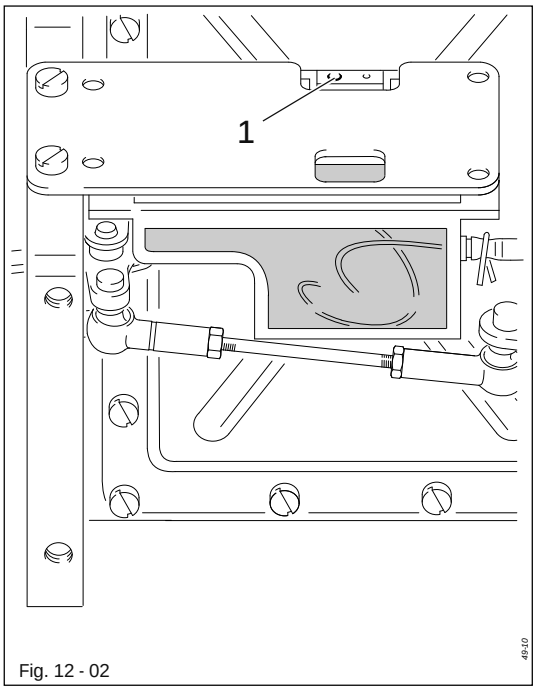

Fig. 12 - 02

Check the oil level once a month!

- If necessary fill oil into hole 1 up to the marking.

Only use oil with a medium viscosity of 10.00 mm²/s at 40ºC and a density of 0.847 g/cm³ at 15ºC.

We recommend
PFAFF sewing machine oil, part no. 280-1-120 105.

12.03 Cleaning/lubricating the top feed joints

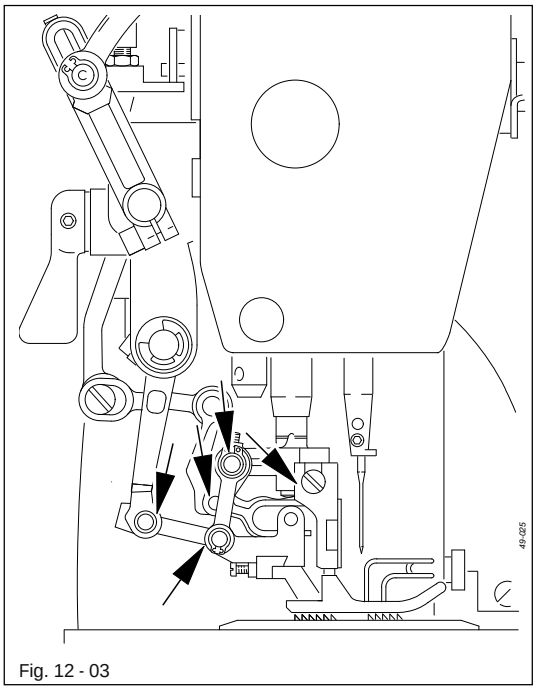

Fig. 12 - 03

- Once a week or after the machine has stood still for longer periods, clean the points marked in the illustration with the special cleaner, part no. 99-137 468-91.
- Afterwards lubricate these points with the special lubricant, part no. 99-137 467-91 (wipe off surplus lubricant with a cloth).

12.04 Checking/adjusting the air pressure

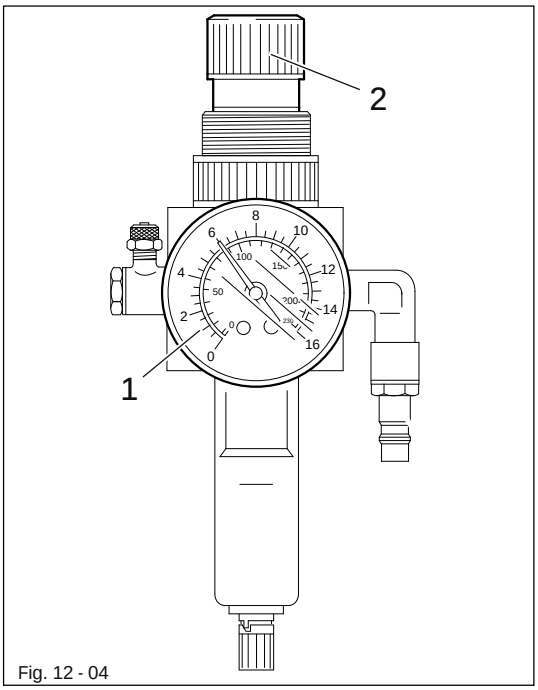

Fig. 12 - 04

- Before operating the machine, always check the air pressure on gauge1.
- Gauge 1 must show a pressure of 6 bar.
- If necessary adjust to this reading.
- To do so, pull knob 2 upwards and turn it so that the gauge shows a pressure of 6 bar.

12.05 Cleaning the air filter of the air-filter/lubricator

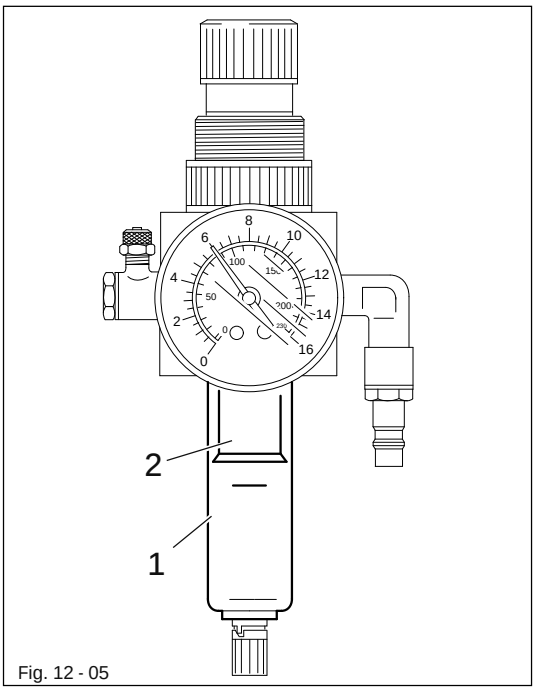

Fig. 12 - 05

Switch the machine off!
Disconnect the air hose at the air-filter/lubricator.

To drain water bowl 1:

- Water bowl 1 drains itself automatically when the compressed-air hose is disconnected from the air-filter/lubricator.

Cleaning filter 2:

- Unscrew water bowl 1.
- Take out filter 2.
- Clean filter 2 with compressed air or isopropyl alcohol (part No. 95-665 735-91).
- Screw in filter 2 and screw on water bowl 1.

13 Adjustment



Please observe all notes from Chapter 1 Safety of the instruction manual! In particular care must be taken to see that all protective devices are refitted properly after adjustment, see Chapter 1.06 Danger warnings of the instruction manual!



If not otherwise stated, the machine must be disconnected from the electrical power supply.

13.01 Notes on adjustment

All following adjustments are based on a fully assembled machine and may only be carried out by expert staff trained for this purpose.
Machine covers, which have to be removed and replaced to carry out checks and adjustments, are not mentioned in the text.
The order of the following chapters corresponds to the most logical work sequence for machines which have to be completely adjusted. If only specific individual work steps are carried out, both the preceding and following chapters must be observed.
Screws, nuts indicated in brackets ( ) are fastenings for machine parts, which must be loosened before adjustment and tightened again afterwards.



On the PFAFF 3822 no c-clamps may be attached to the needle bar as this would damage the special coating on the needle bar.

13.02 Tools, gauges and other accessories

- 1 set of screwdrivers with blade widths from 2 to 10 mm
- 1 set of wrenches with jaw widths from 6 to 22 mm
- 1 set of Allan keys from 1.5 to 6 mm
- 1 original Seeger pliers
- 1 pair of tweezers, 90º offset
- 1 metal ruler (part no. 08-880 218-00)
- 1 adjustment pin ø 5 mm (part no. 13-030 341-05)
- 1 adjustment coupler (part no. 91-069 375-15)
- 1 adjustment stand (part no. 61-111 639-20)
- 1 feed dog height gauge (part no. 61-111 639-49)

13.03 Abbreviations

t.d.c. = top dead centre
b.d.c. = bottom dead centre

13.04 Control and adjustment aids

By marking the holes 1 and 3 - 6 with the adjustment pin (ø 5 mm), the desired needle bar positions can be fixed exactly.

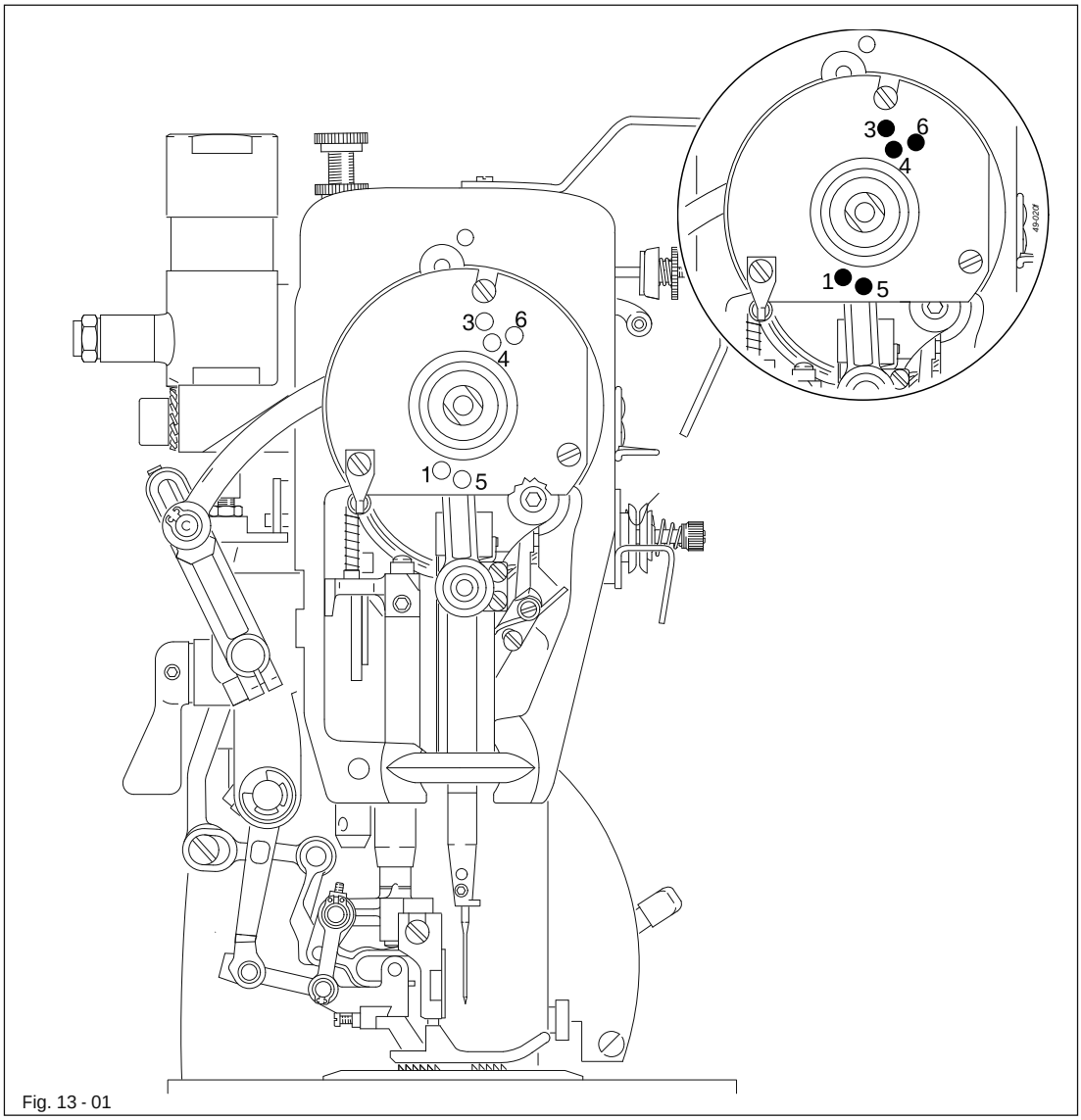

Fig. 13 - 01

- Turn the balance wheel until the needle bar is approximately in the desired position.
- Insert the adjustment pin into the appropriate hole and apply pressure.
- Turn the balance wheel slightly backwards and forwards, until the pin locks into the rear crank recess, in this way blocking the machine.

Adjustment hole 1 = 0.6 mm past top dead centre of the needle bar (0.6 past t.d.c.)
Adjustment hole 3 = 0.6 mm past bottom dead centre of the needle bar (0.6 past b.d.c.)
Adjustment hole 4 = 1.8 mm past bottom dead centre of the needle bar (1.8 past b.d.c.)
Adjustment hole 5 = top dead centre of the needle bar (t.d.c.)
Adjustment hole 6 = 4.0 mm past bottom dead centre of the needle bar (4.0 past b.d.c.)

13.05 Adjusting the basic machine

13.05.01 Basic position of the machine

- Switch on the machine.



- Call up the input mode.

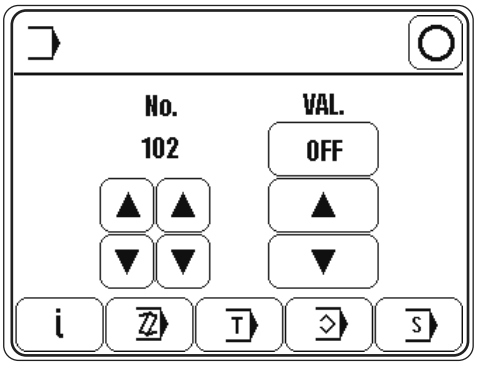



- Call up parameter "301".

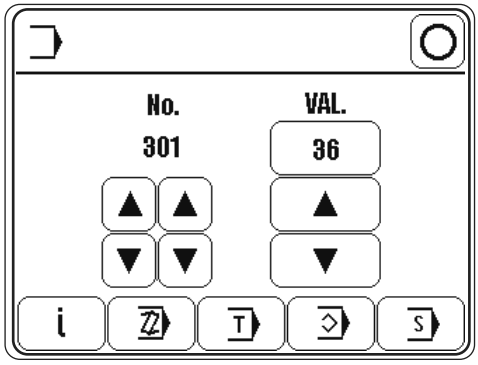

- By turning the balance wheel, position the needle point flush to the stop edge of the needle plate.



- Conclude the input.
- Switch off the machine.

13.05.02 Preliminary adjustment of the needle height

Requirement
With the needle bar at b.d.c. the distance between bottom edge of the needle bar and the needle plate must be16.5 mm.

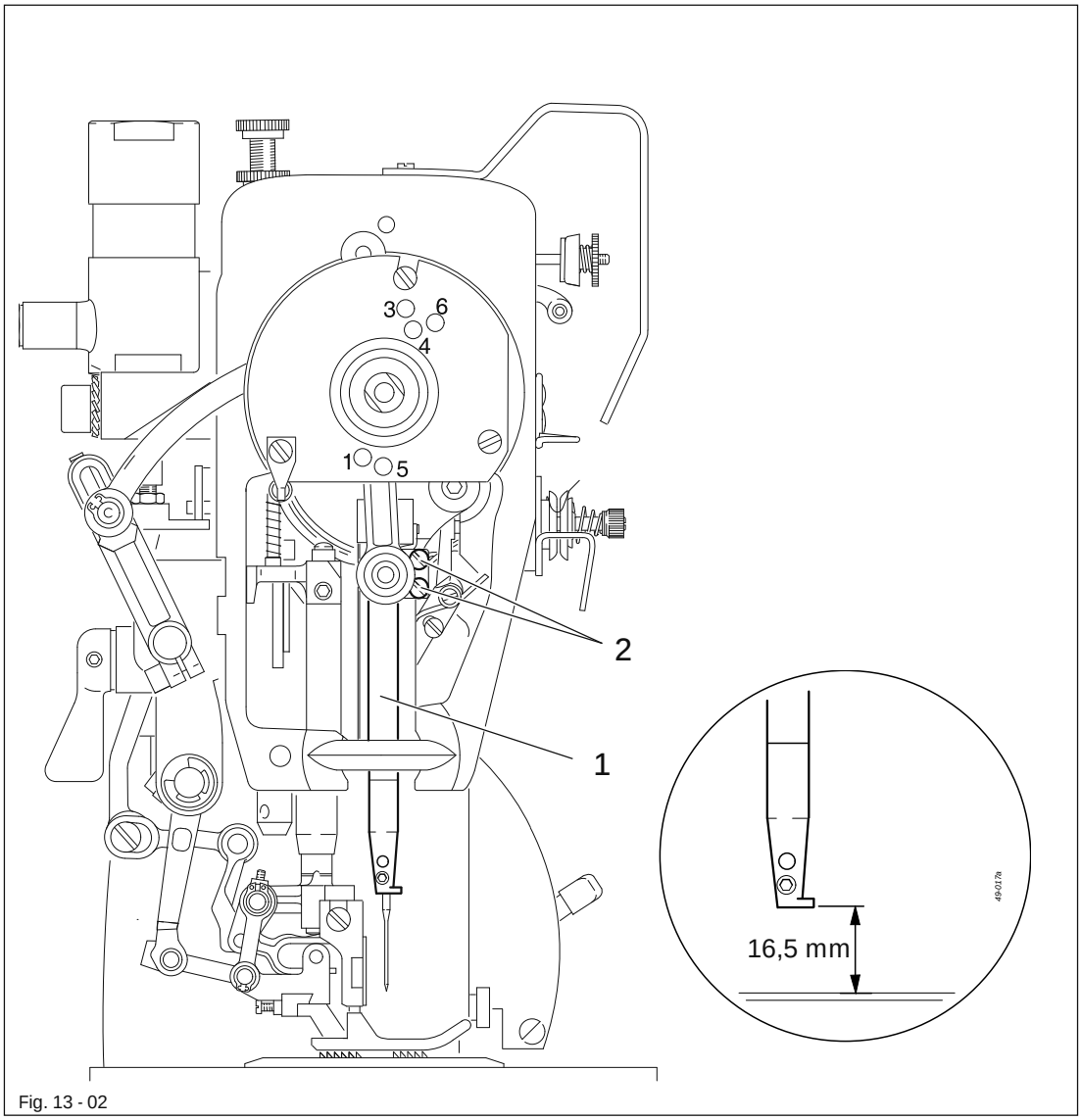

Fig. 13 - 02

- Adjust needle bar 1 (screws 2) according to the requirement.

13.05.03 Needle in needle-hole centre

Requirement
The needle should enter the needle hole exactly in the centre.

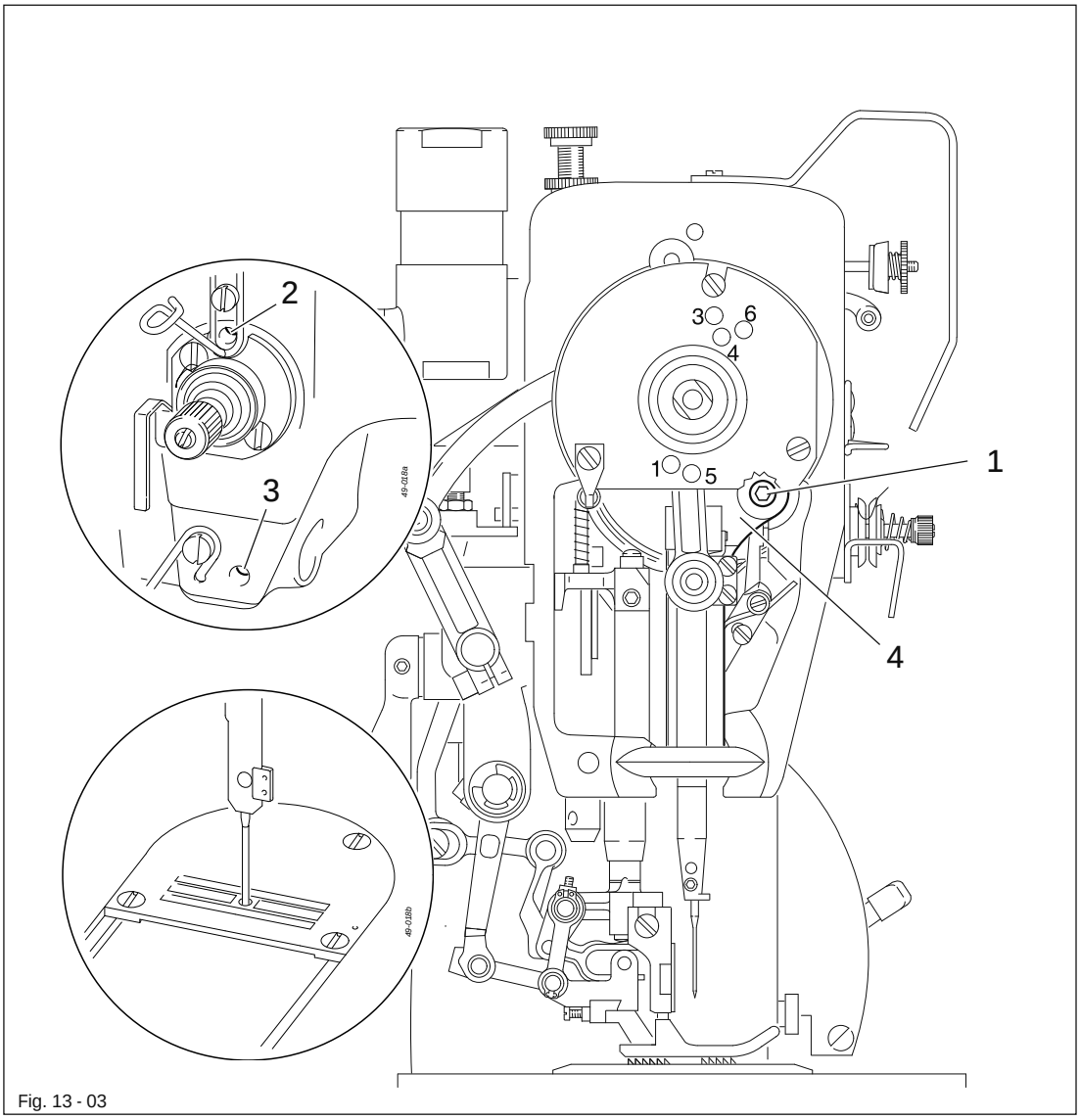

Fig. 13 - 03

- Position the needle directly over the needle hole.
- Loosen screws 1, 2 and 3.
- Adjust the needle bar frame 4 both crosswise and in the direction of sewing according to the requirement and tighten screw 2 slightly and screw 3.
- With screw 1 draw the guide stud located behind it towards the eye of the needle bar frame and tighten it.
- Turn the balance wheel round a few times to avoid any distortion of the needle bar frame and tighten screw 2.

13.05.04 Neutral position of the bottom feed dog

Requirement
With the stitch length set at "0" there should be no feeding motion of the bottom feed dog when the balance wheel is turned.

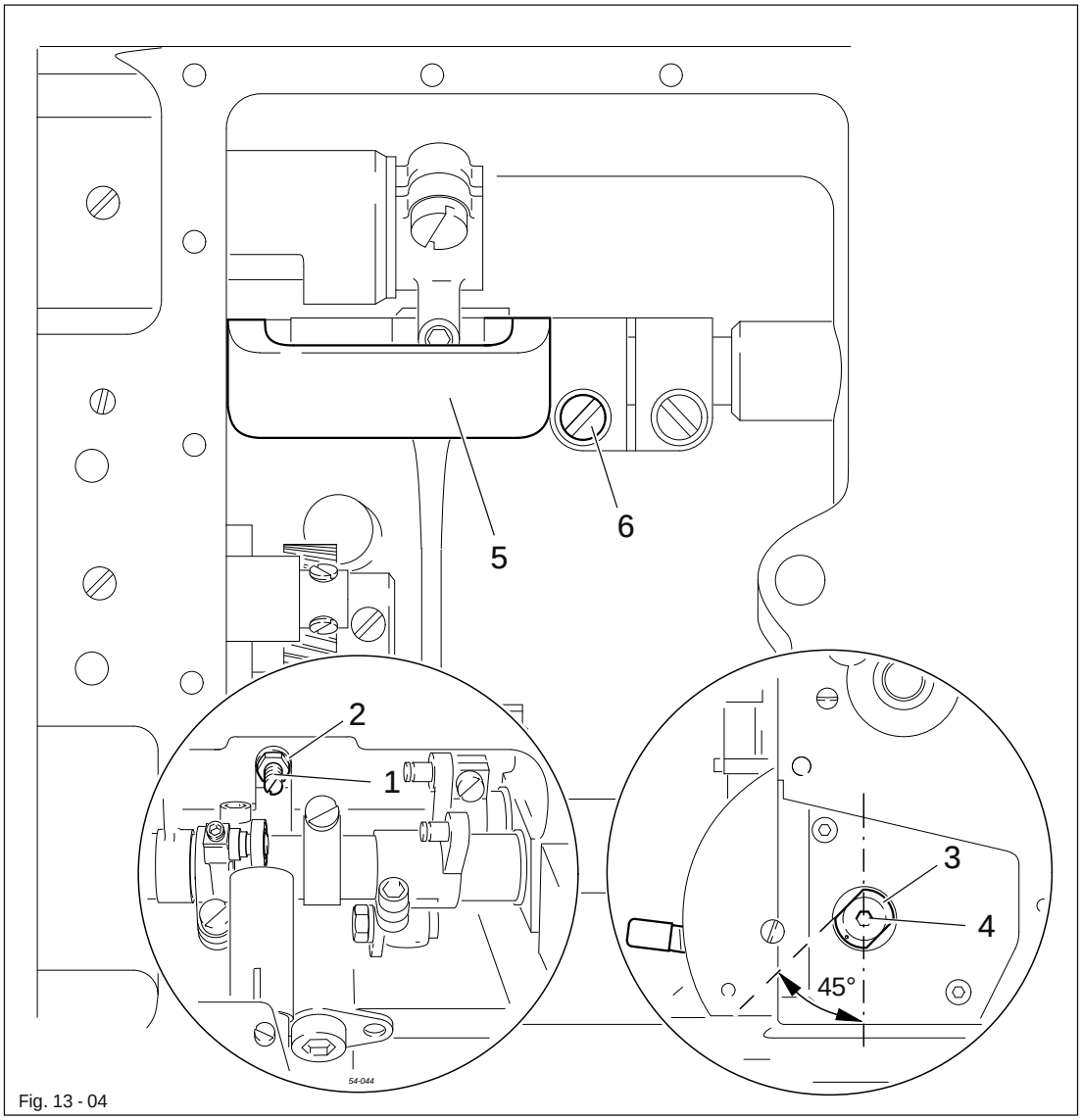

Fig. 13 - 04

- Loosen screw 1 (nut 2).
- Set stitch length at "0".
- Turn eccentric bush 3 (screw 4) so that the marking is pointing downwards and the surface of eccentric bush 3 is at an angle of 45º to the front edge of the machine.
- While turning the balance wheel continuously, adjust crank 5 (screw 6) according to the requirement.

Screw 1 remains loosened for further adjustments.

13.05.05 Feeding motion of the bottom feed dog

Requirement
With the maximum stitch length set and the needle bar positioned 0.6 mm past t.d.c. (adjustment hole 1), the bottom feed dog should not move when the reverse feed key is operated.

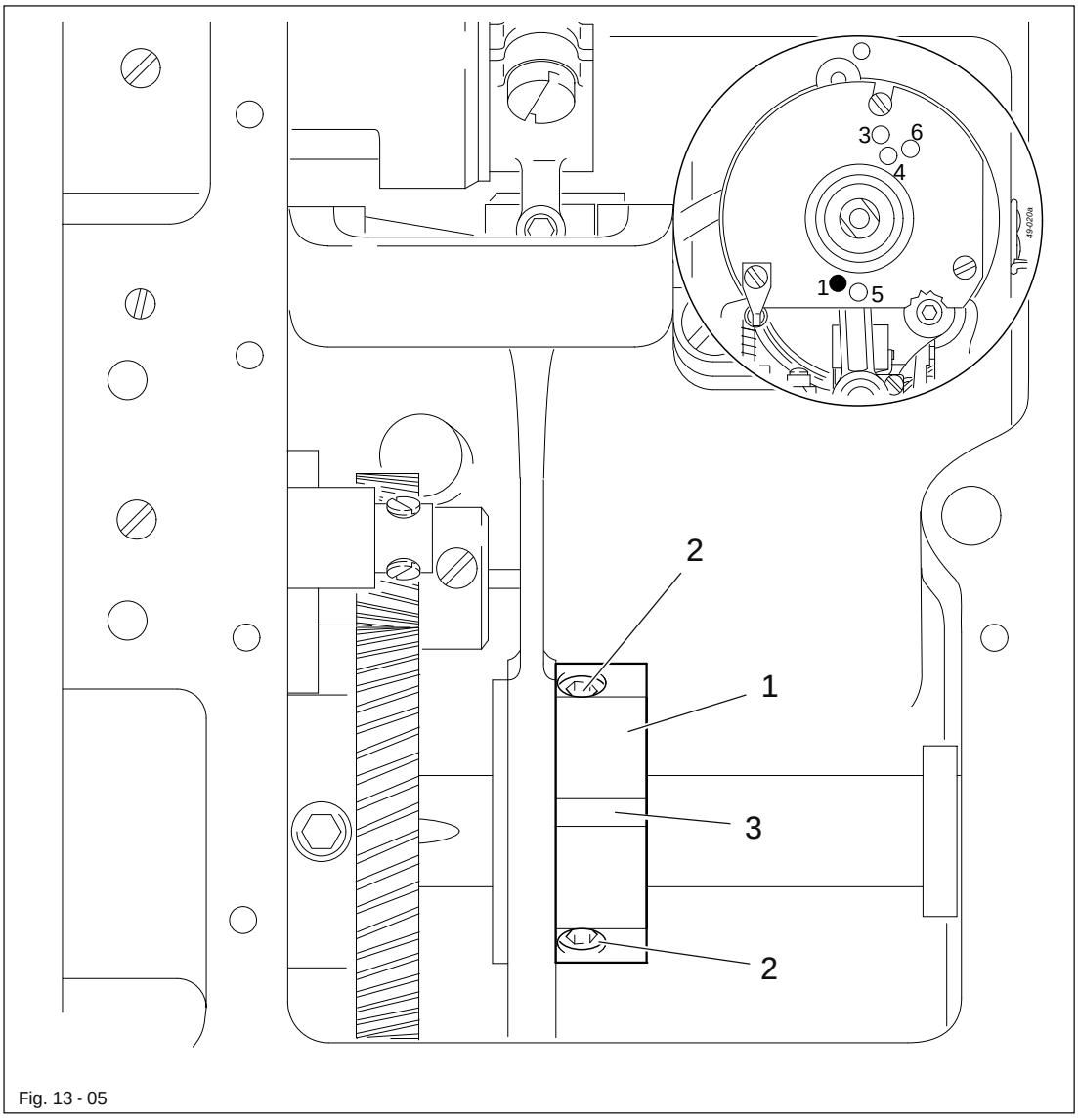

Fig. 13 - 05

- Bring needle bar to 0.6 past t.d.c.
- Adjust eccentric 1 (screw 2) according to the requirement, making sure that the cutout 3 is visible.

13.05.06 Lifting motion of the bottom feed dog

Requirement

1. With the needle bar set 0.6 past t.d.c. (adjustment hole 1) and the stitch length set at "0", the bottom feed dog should be at the top of its stroke.
2. The cutout of eccentric 1 should be more or less directly under the axis centre.

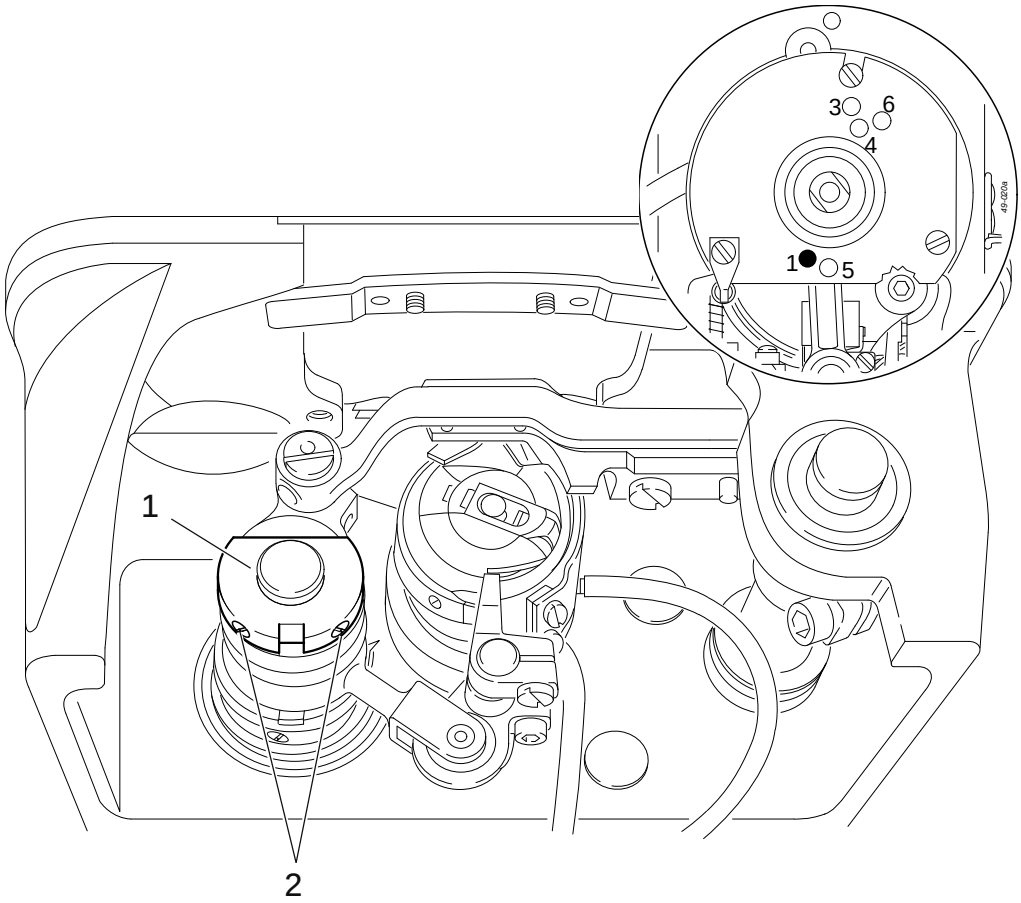

Fig. 13 - 06

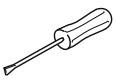

- Adjust eccentric 1 (screws 2) according to the requirement.

13.05.07 Height of the bottom feed dog

Requirement

When the needle bar is at 0.6 past t.d.c. (adjustment hole 1) and the stitch length is set at "0",

1. The bottom feed dog should be in the centre of the needle plate cutout, as seen from the side and in the direction of feed.
2. The bottom feed dog should be at the top of its stroke and its entire length should be positioned against the adjustment gauge.

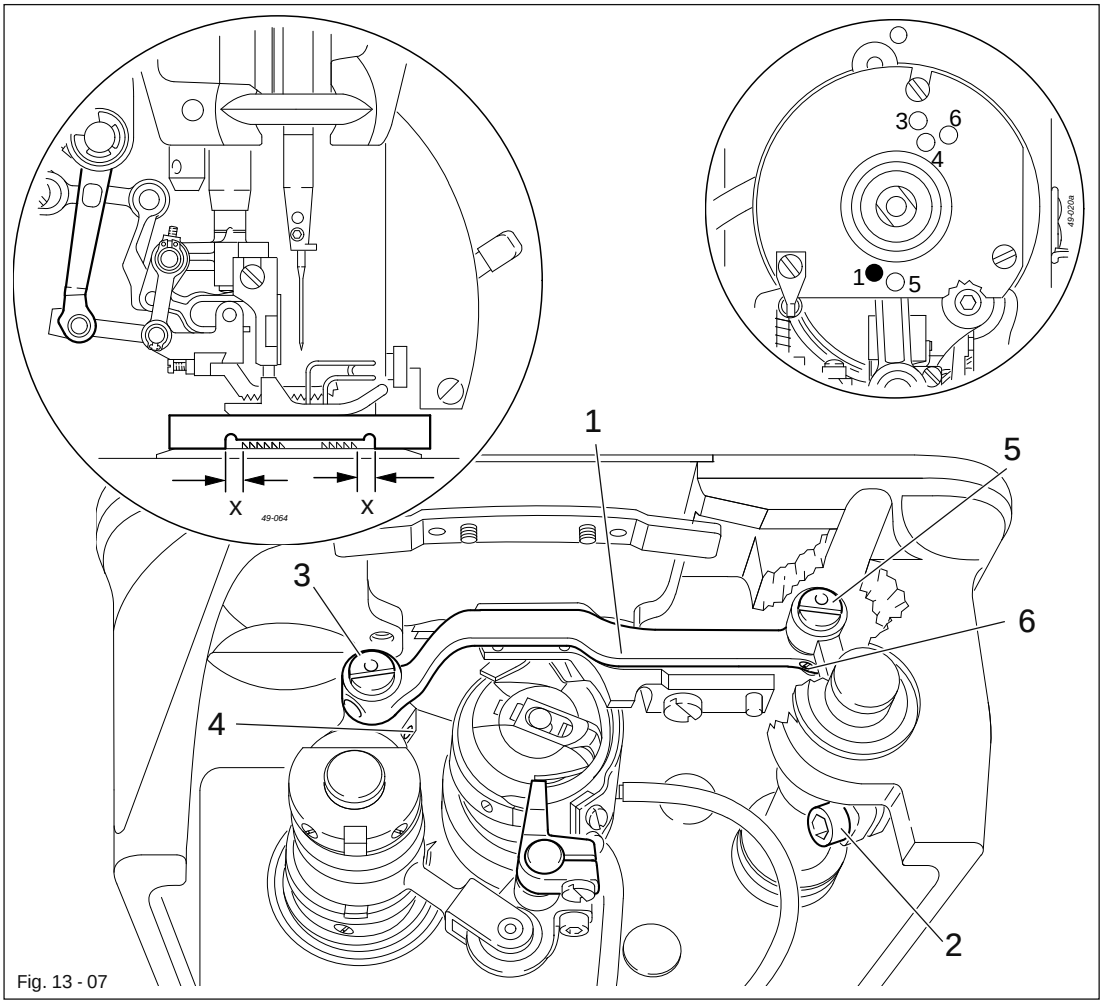

Fig. 13 - 07

- Adjust feed dog bracket 1 (screw 2) according to requirement 1.
- Lower the presser foot onto the gauge (part no.61-111 639-49).
- Turn eccentric 3 (screw 4) and eccentric 5 (screw 6) according to requirement 2.

13.05.08 Clearance between presser foot and needle plate

Requirement
When hand lever 1 is raised there should be a clearance of 5 mm between the presser foot and the needle plate.

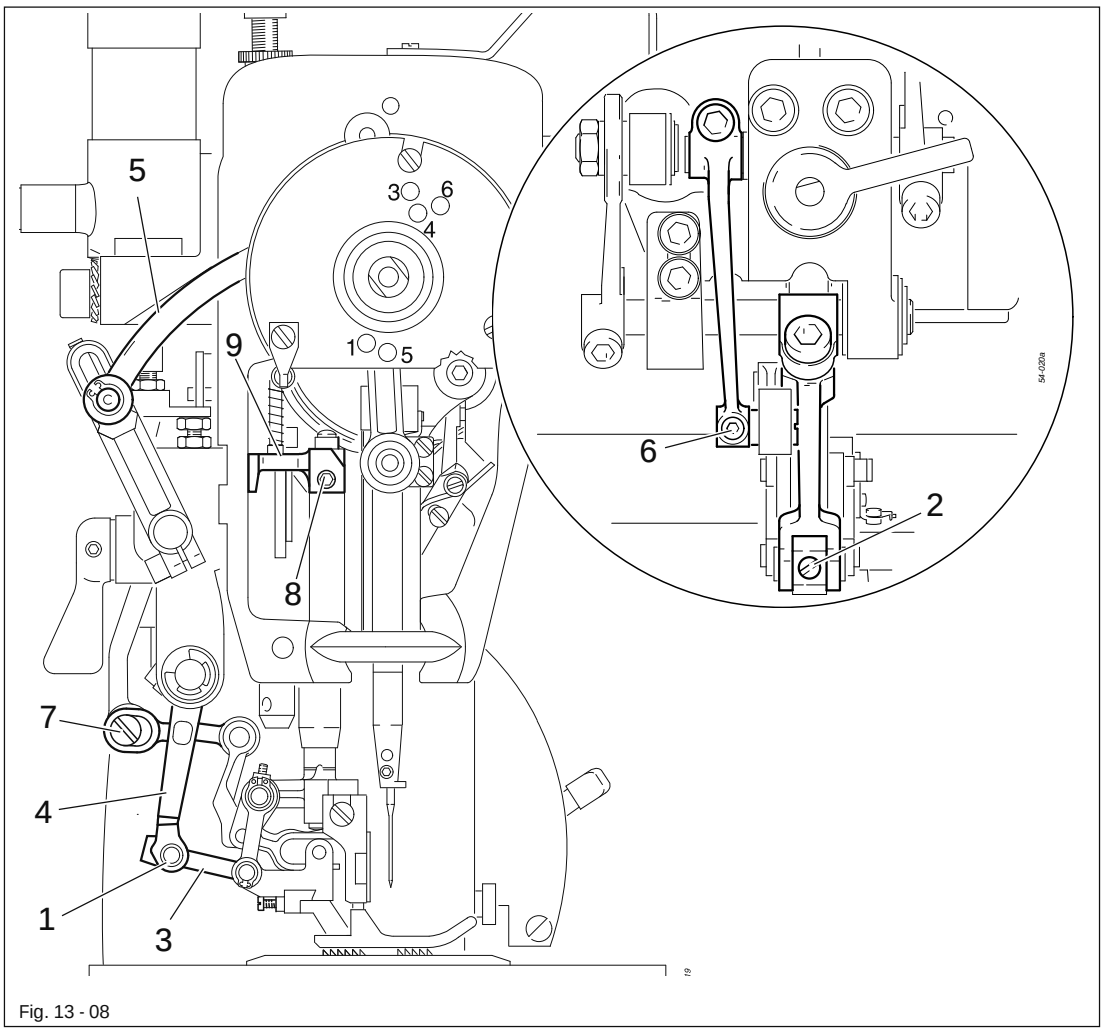

Fig. 13 - 08

- With the hand lever lower the presser foot onto the needle plate.
- Loosen the adjustment screw for the presser foot presser (reduce pressure)
- Push out bolt 1 (screw 2) and remove connection element 3 from the yoke of lever 4.
- By turning the balance wheel bring lever 5 to its furthest point of reversal.
- Place feed dog adjustment gauge under the presser foot with the recess facing down.
- Loosen screw 6 and push out bolt 7.
- Adjust presser foot (screw 8) at the side so that the edge of the presser foot is parallel to the bottom feed dog.
- Lower lifting piece 9 as far as possible and tighten screw 8.

Screws 2 and 6 remain loosened for further adjustments.

13.05.09 Stop in relation to the presser foot

Requirement
When adjustment foot 1 (part no. 61-111 639-20) is resting on the needle plate, stop 4 should be touching screw **2**

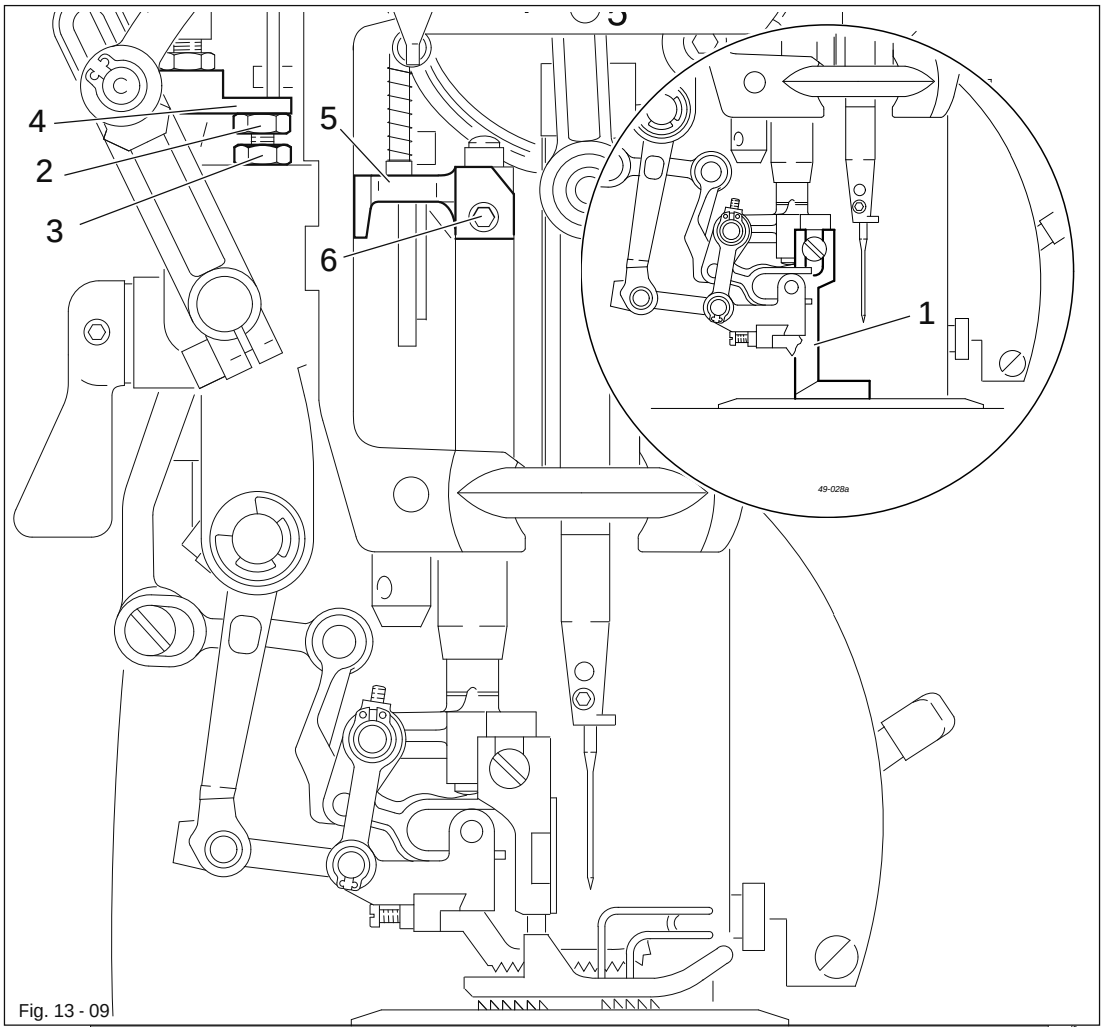

Fig. 13 - 09

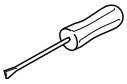

- Remove presser foot.
- Attach adjustment foot 1 (part no. 61-111 639-20) and lower it onto the needle plate.
- Adjust screw 2 (nut 3) according to the requirement.
- Remove adjustment foot 1 and replace presser foot.

13.05.10 Top feed driving and connecting lever

Requirement
1. All moving parts of the top feed should move freely without play.
2. The top feed must not touch the presser foot.

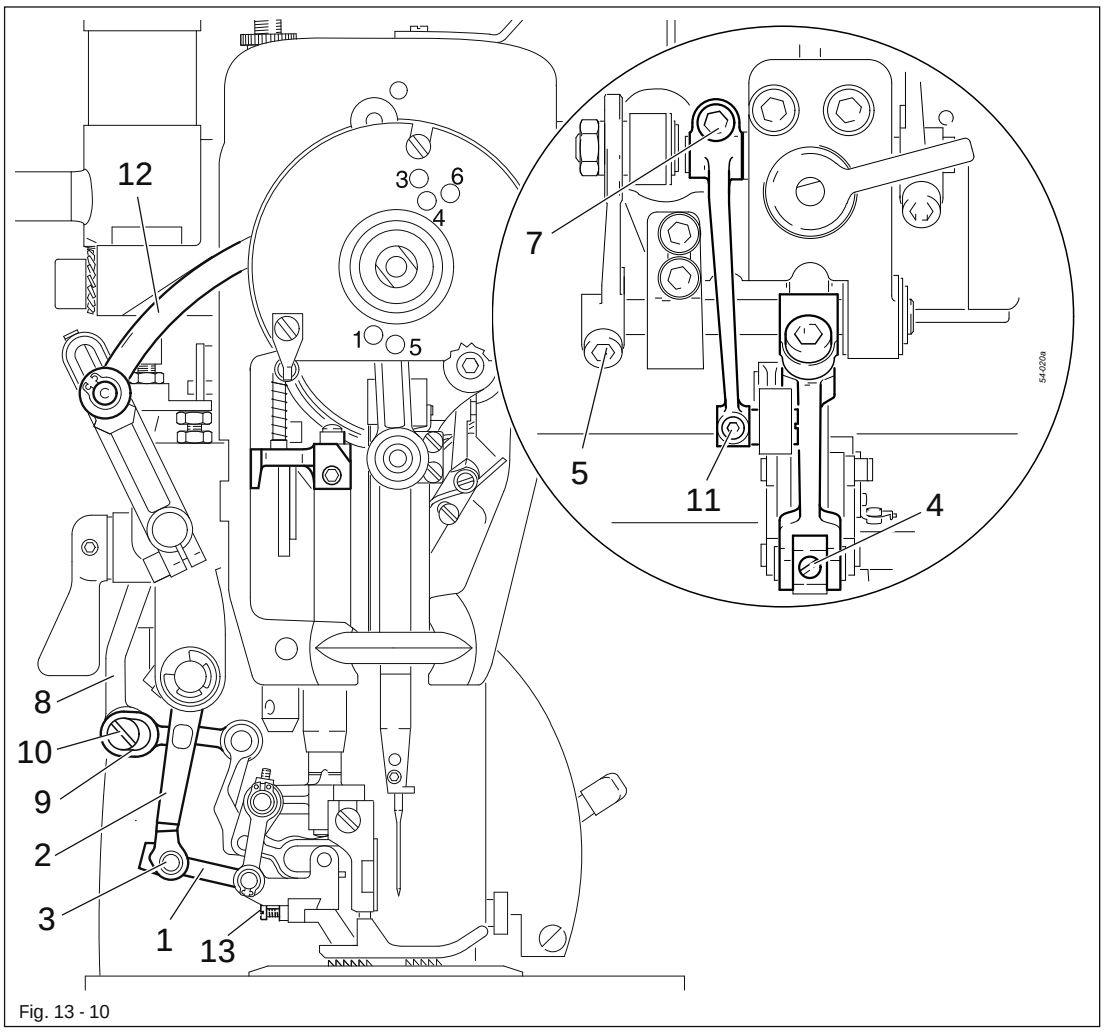

Fig. 13 - 10

- Lower the presser foot with the hand lever.
- Swing connection element 1 into the yoke of lever 2, insert bolt 3 and tighten screw 4 (make sure that the parts move freely, if necessary adjust lever 2).
- Align top feed dog in the centre of the presser foot cutout in the direction of sewing (screw 5).
- Loosen screw 7.
- Align the hole of lever 8 with the elongated hole of lever 9 without any lateral play, if necessary adjust or align lever 8.
- With its greatest eccentricity pointing downwards, place bolt 10 into the holes of lever 9 and 8 and tighten screw 11.
- Bring lever 12 to its furthest point of reversal.
- Press lever 8 in feed direction until a stop can be felt and tighten screw 7.
- Align the side of the top feed foot so that it is not touching the presser foot (screw 13).

13.05.11 Neutral position of the top feed dog

Requirement
When the stitch length is set at "0" and with the adjustment gauge 4 fitted, there should be no feeding motion of the top feed dog.

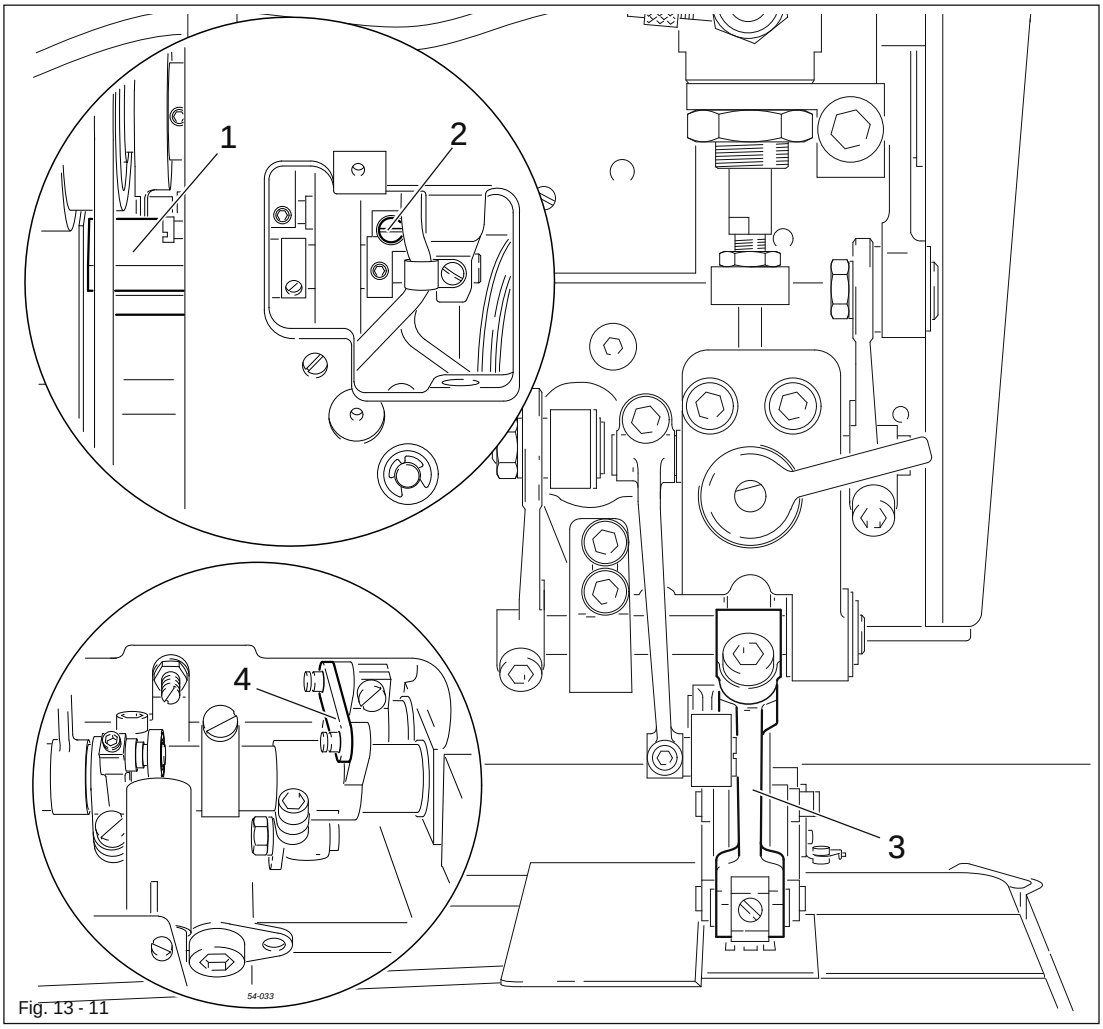

Fig. 13 - 11

The stitch length limitation (screw 1 in Chapter 13.05.04 Neutral position of the bottom feed dog) must be deactivated.

- Set stitch length at "0".
- While continuously turning the balance wheel, turn crank 1 (screw 2) so that lever 3 does not move.

13.05.12 Feeding motion of the top feed dog

Requirement
When the needle bar is positioned 0.6 mm past t.d.c (adjustment hole 1) and the maximum stitch length is set, lever 3 should not move when the feed reverse key is operated.

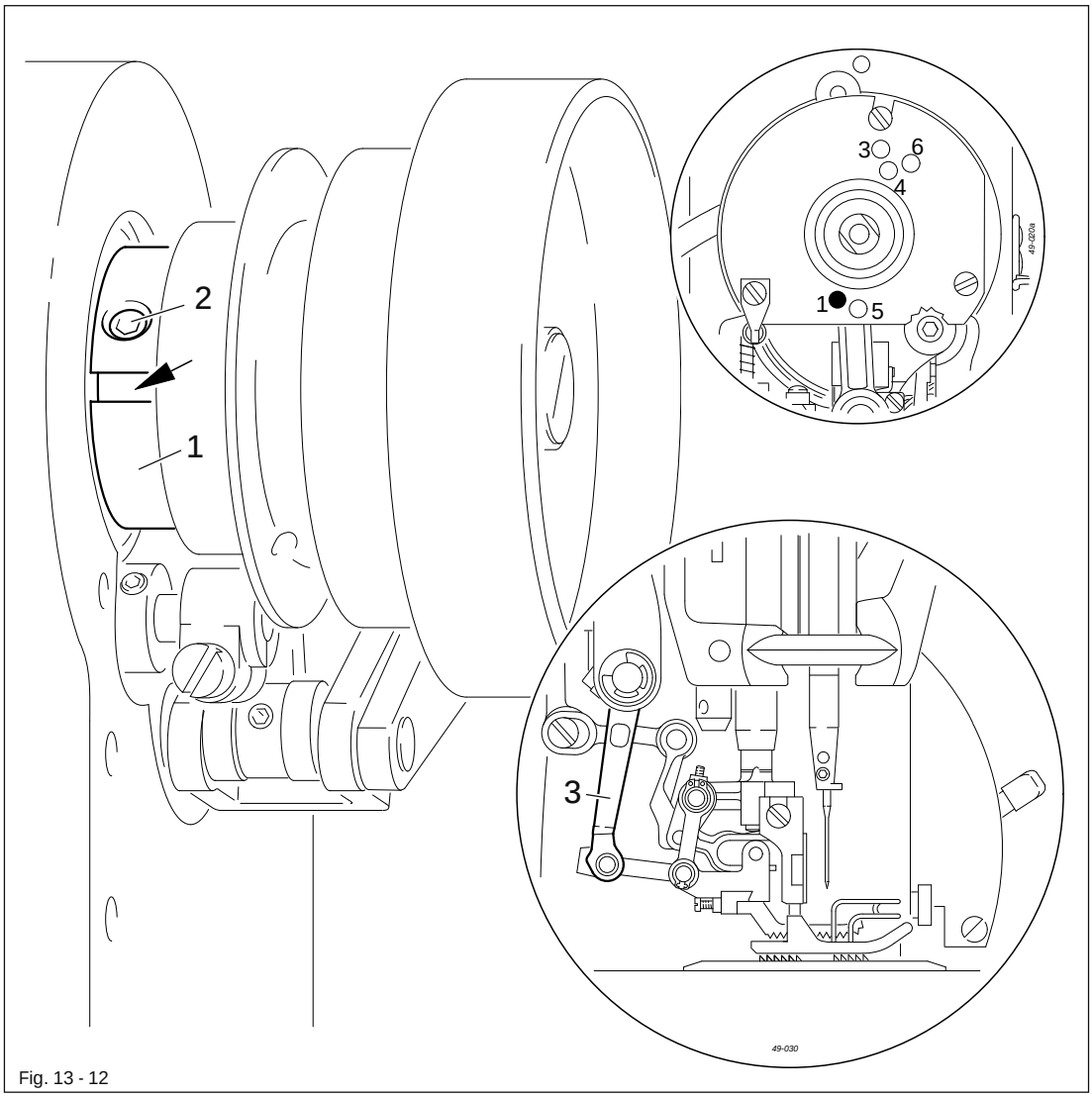

Fig. 13 - 12

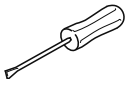

- While continuously operating the feed reverse key, adjust eccentric 1 (screws 2) so that the slot is pointing towards the operator and lever 3 does not move.

13.05.13 Front linkage rod to top feed drive

Requirement
With the needle bar positioned 0.6 past t.d.c. (adjustment hole 1), there must be a distance of approx. 16.5 mm between the eye of the linkage rod 2 and machine case 3.

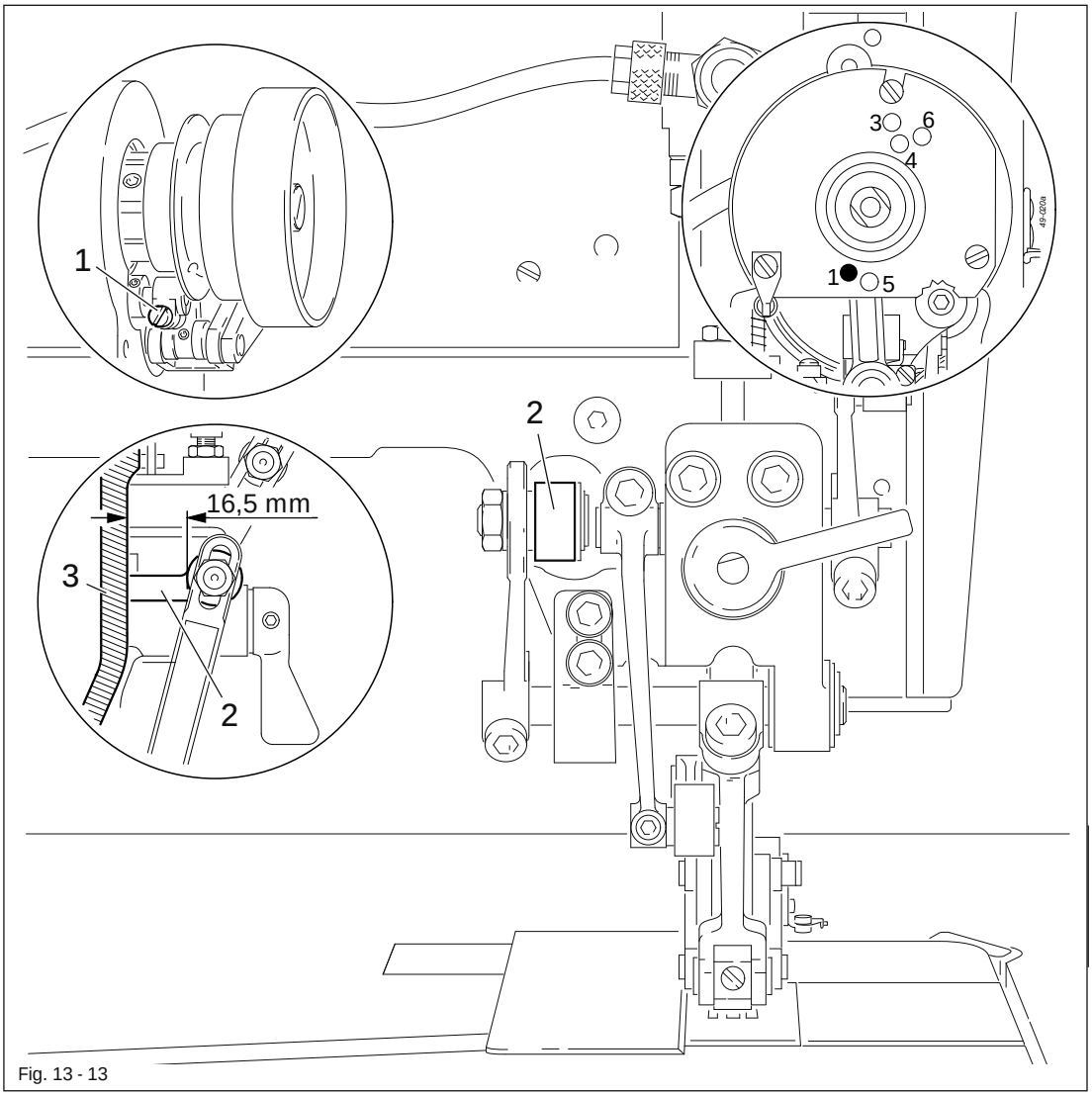

Fig. 13 - 13

- Bring needle bar to 0.6 past t.d.c..
- Loosen screw 1.
- Adjust linkage rod 2 according to the requirement.
- Tighten screw 1.
- Check the setting.

13.05.14 Top feed stroke

Requirement
With the stitch length set at "3" and the adjustment gauge 12 fitted, at its t.d.c. the top feed dog 2 should be 2 mm from the needle plate.

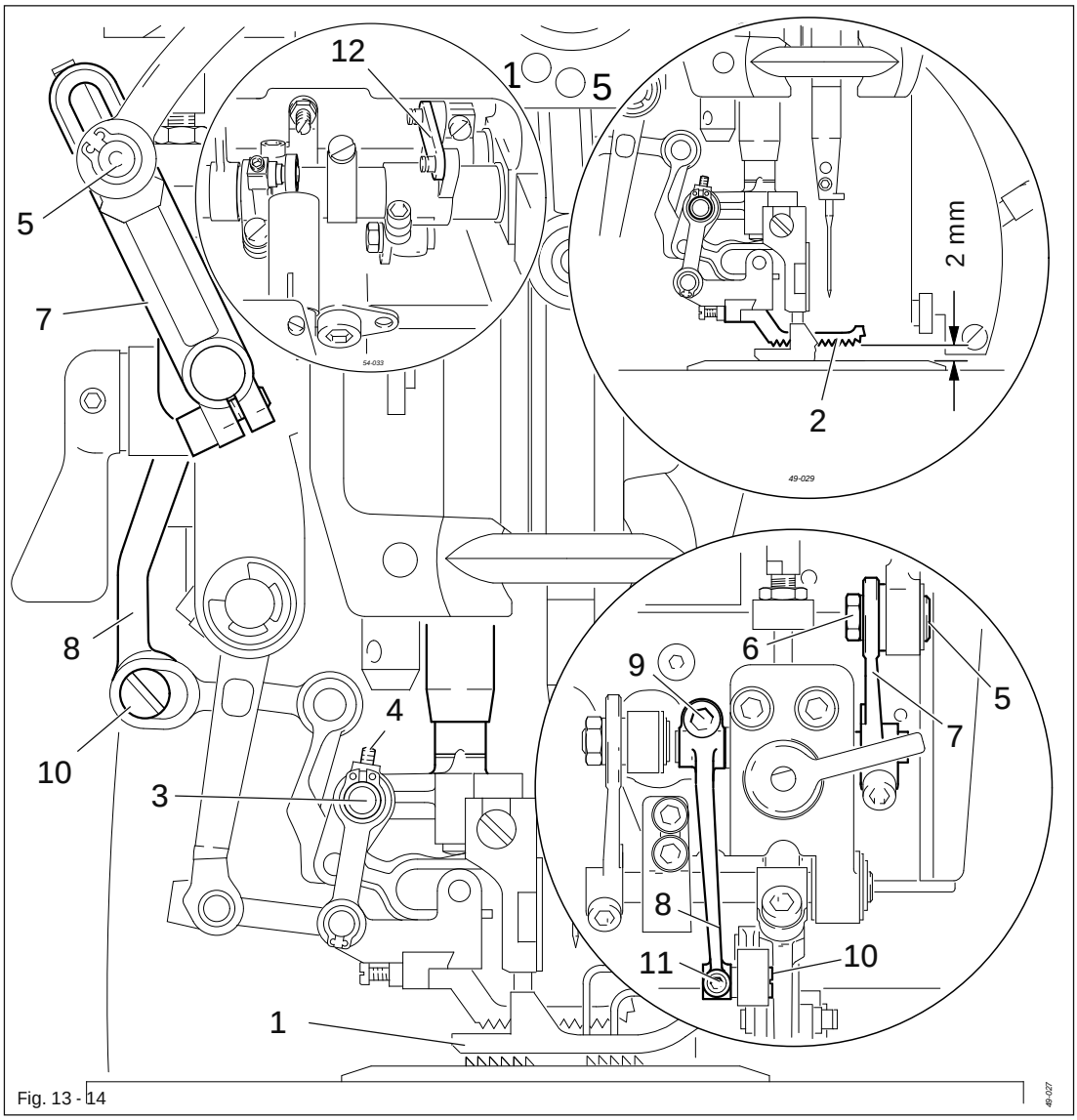

Fig. 13 - 14

- Lower the presser foot 1 onto the needle plate.
- Set stitch length at "3".
- By turning the balance wheel bring top feed dog 2 to its t.d.c.
- Turn eccentric pin 3 (screw 4) so that its greatest eccentricity points towards the needle.
- Bring bolt 5 (nut 6**)** down to rest in the elongated hole of lever 7**.**
- Adjust lever 8 (screw 9) for the pre-adjustment of the distance between the top feed dog 2 and the needle plate.
- Adjust eccentric pin 10 (screw 11) according to the requirement.

13.05.15 Lifting motion of the top feed dog

Requirement
When the stitch length is set at "4" and with adjustment gauge 3 fitted, the top feed dog should rest on the ascending bottom feed dog, when this reaches the top edge of the needle plate.

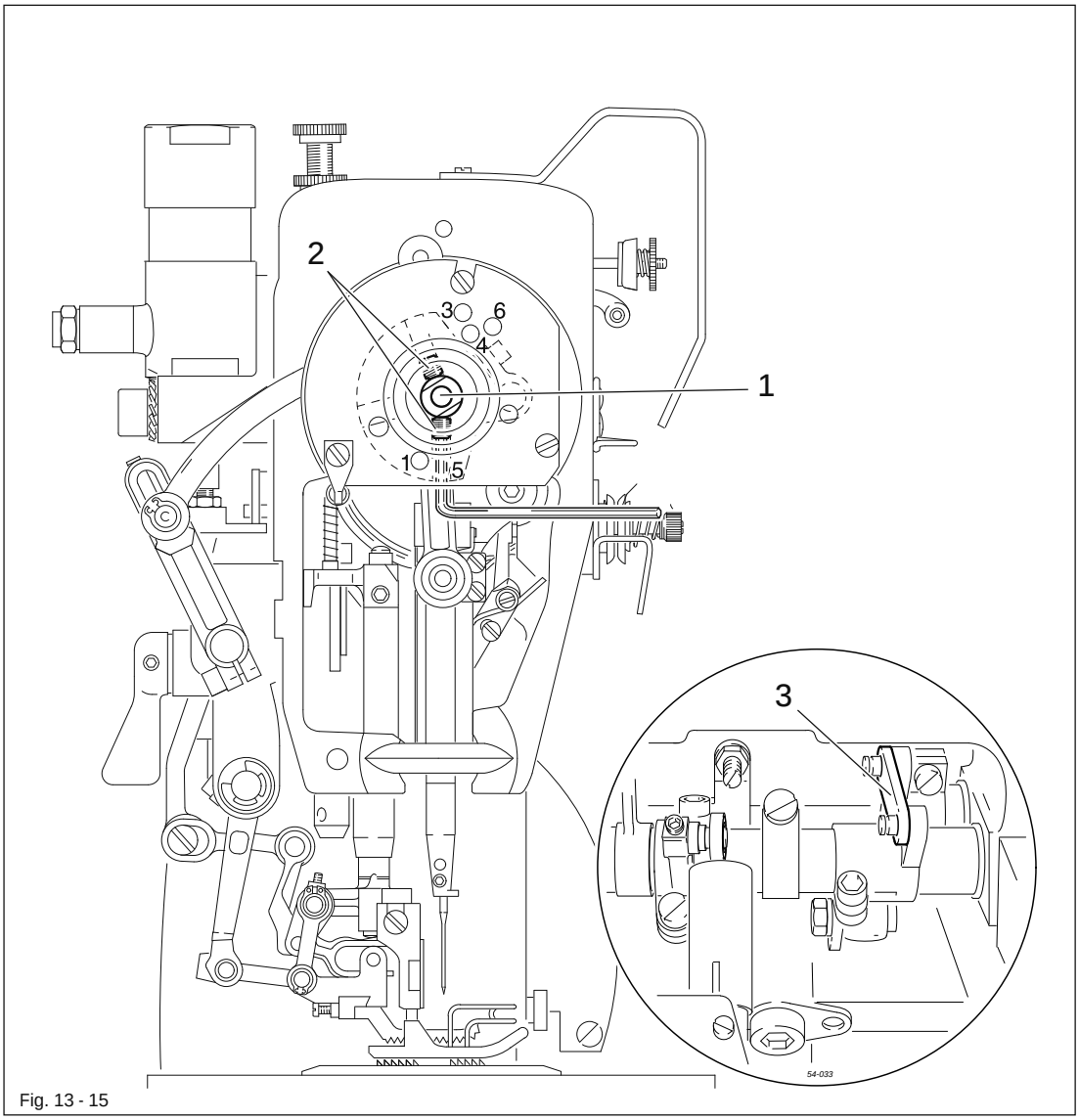

Fig. 13 - 15

- Set stitch length at "4".
- Adjust eccentric 1 (screws 2) according to the requirement.

13.05.16 Stitch length adjustment

Requirement
When set at "3" the stitch length must be the same size when sewing forwards or in reverse.

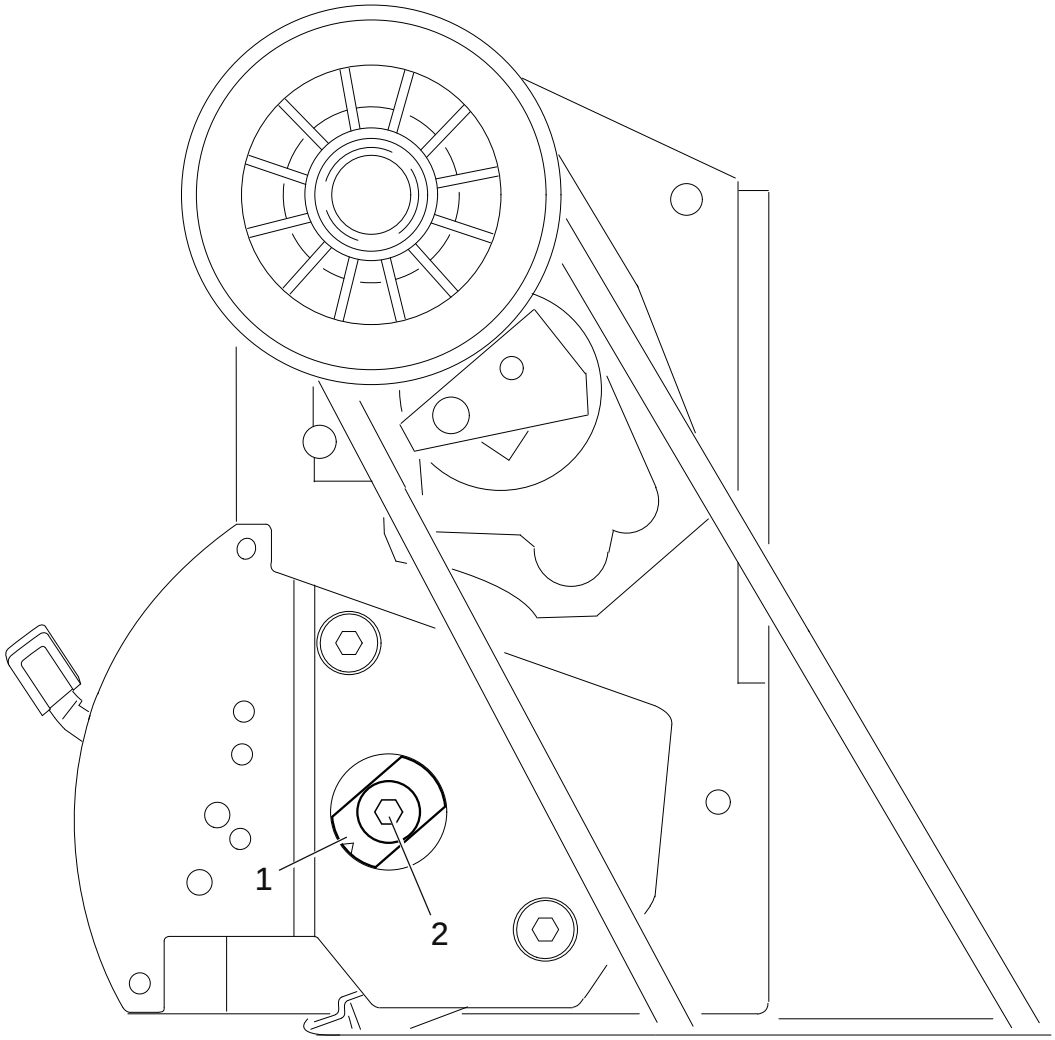

Fig. 13 - 16

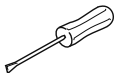

- Loosen screw 2.
- Adjust bush 1 according to the requirement. Take care that the eccentricity of bush 1 is in the lower range.
- Tighten screw 2.

13.05.17 Stitch length limitation

Requirement

1. The bottom stroke of rocking bar 6 should be set so that the maximum stitch length is 2.7 mm.
2. The top stroke of rocking bar 6 should be set so that the stitch length is 2.7 mm when the feed reverse key is pressed down as far as possible.

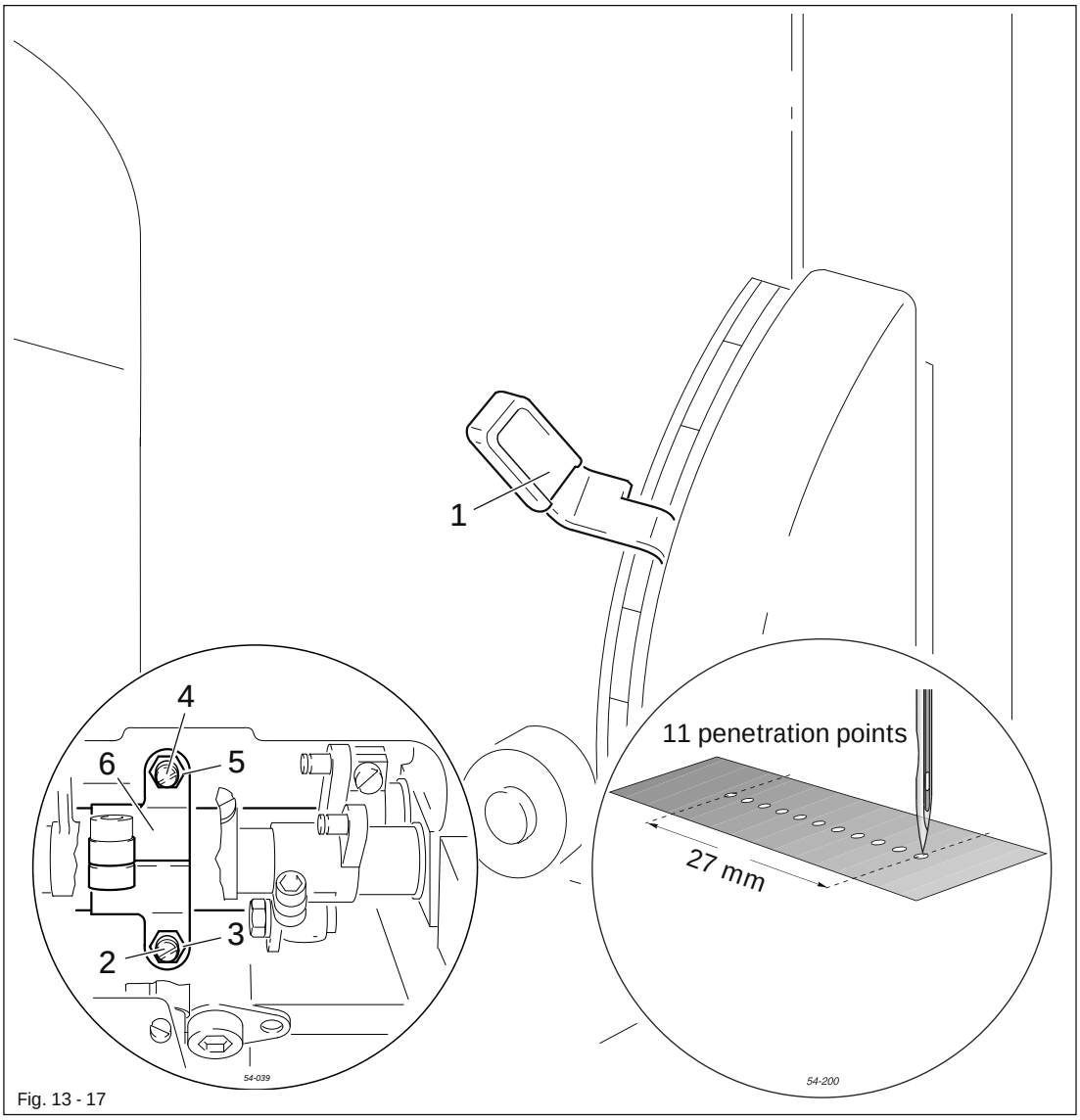

Fig. 13 - 17

- Set the stitch length on lever 1 according to requirement 1.
- Adjust screw 2 (nut 3) according to requirement 1.
- Adjust screw 4 (nut 5) according to requirement 2.

13.05.18 Basic setting of the differential adjustment device

Requirement
With the fullness set at "0", the stitch length at "2.7" and the adjustment gauge 5 fitted, the roller 2 should be touching pressure sleeve 4.

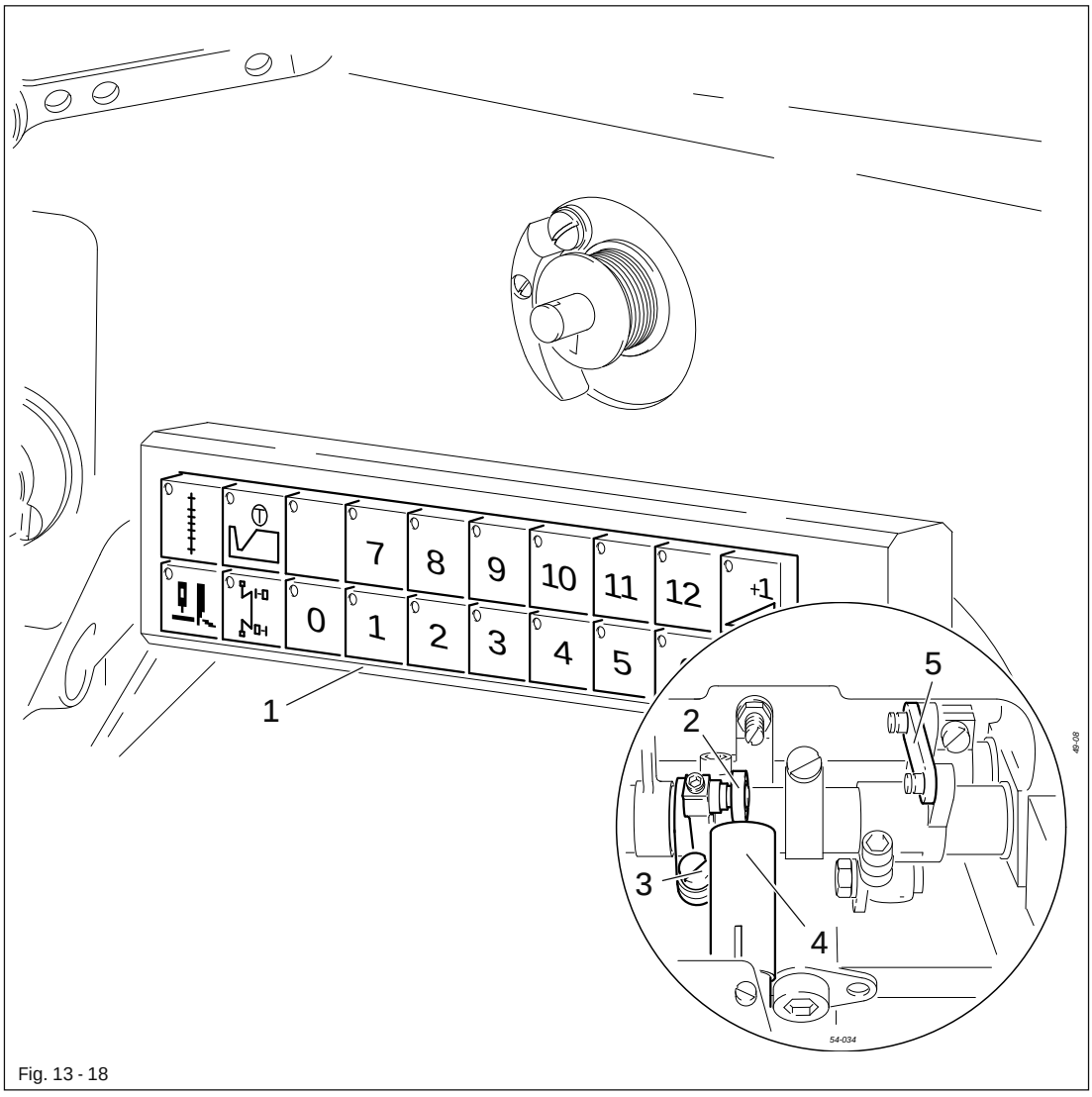

Fig. 13 - 18

- Switch on the machine.
- Press key "0" on keyboard 1 (LED must light up).
- Switch off the machine.
- Adjust roller 2 (screw 3) according to the requirement.

13.05.19 Eccentric hook shaft bearing and hook-to-needle clearance

Requirement

1. The slot in bearing 3 (see arrow) must be visible from below and there should be a slight but still noticeable amount of backlash between gears 5 and 7.
2. When the hook is resting lightly on the spinning disc 4 and the point of the hook is positioned towards the centre of the needle, there must be a clearance of 0.05 – 0. 1 mm between the point of the hook and the needle groove.
3. Gear 5 should be in alignment with gear 7.

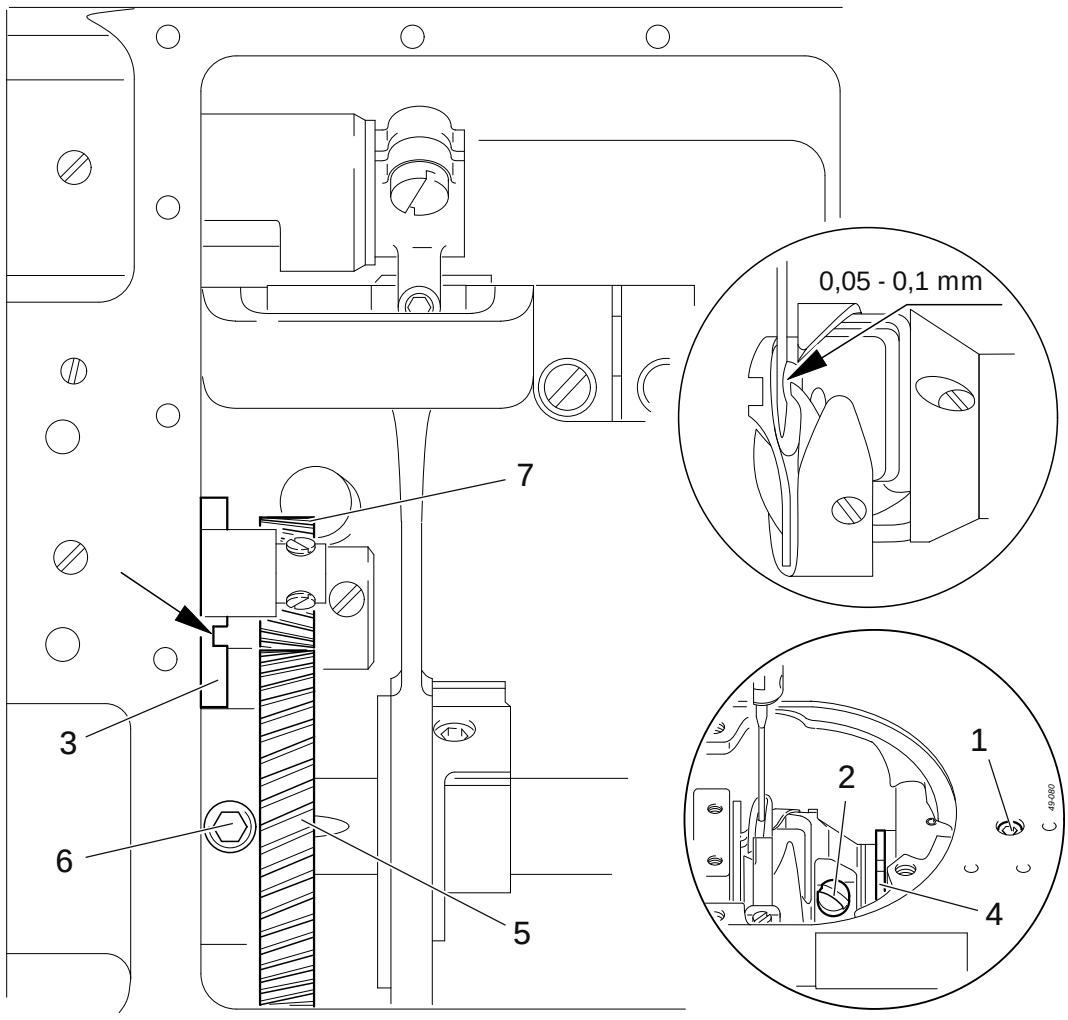

Fig. 13 - 19

- Loosen screws 1 and 2.
- Adjust bearing 3 according to requirement 1.
- Bring hook into light contact with spinning disc 4, adjust bearing 3 according to requirement 2, without distorting it, and tighten screw 1.
- Adjust gear 5 (screws 6) according to requirement 3.

Screw 2 remains loosened for the next adjustment.

13.05.20 Needle bar rise, readjustment of the needle height and bobbin case position stop

Requirement

With the stitch length set at "0" and the needle bar positioned 1.8 mm past b.d.c. (adjustment hole 4)

1. The point of the hook should be in centre of the needle and the top edge of the needle eye should be 0.8 mm below the hook point.
2. There should be a clearance of 0.5 mm between the lug of position stop 3 and the bottom of the stop groove.

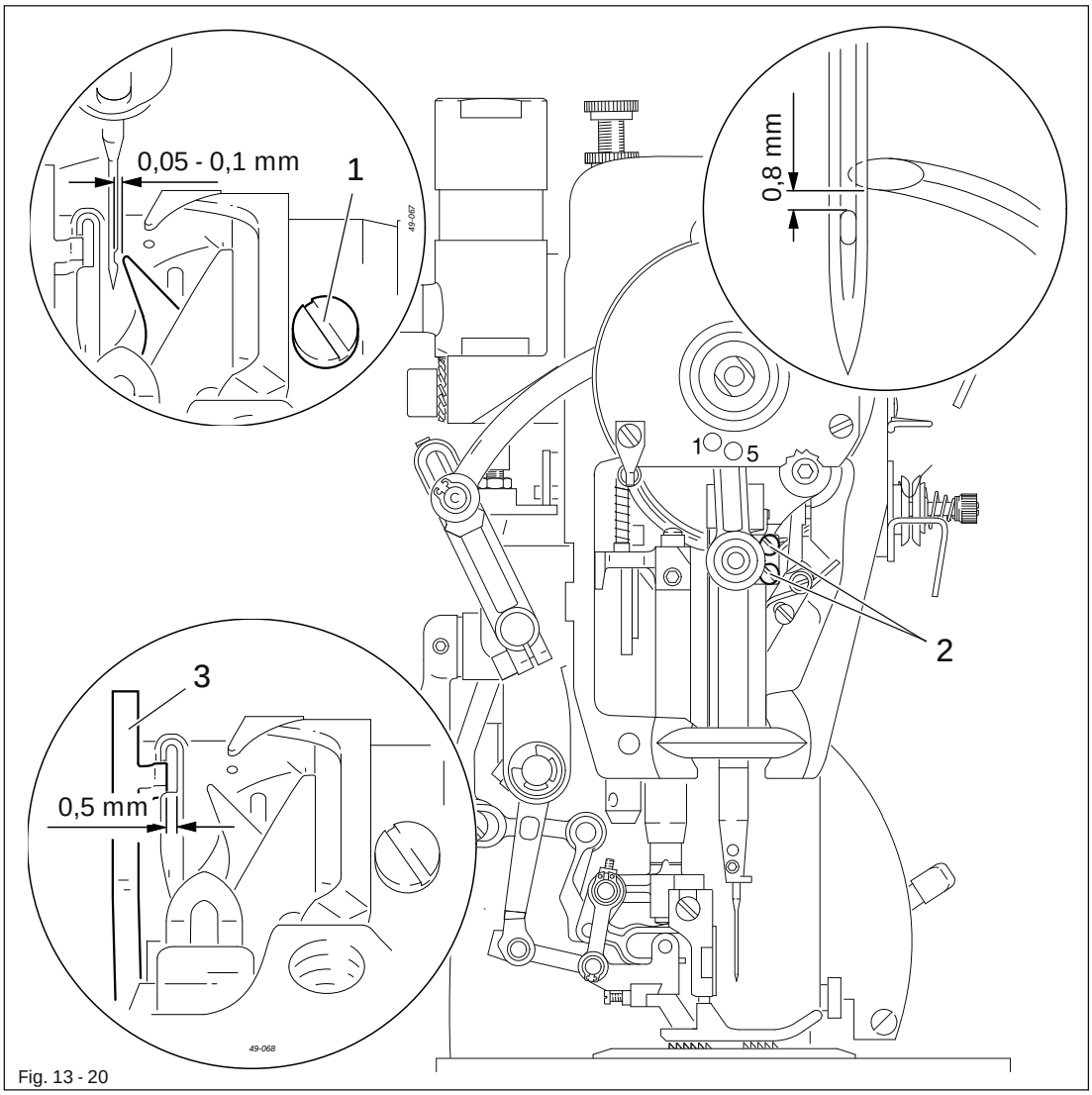

Fig. 13 - 20

- Adjust the hook (screw **1**) and needle bar (screws 2) according to requirement 1 without twisting them.
- Position the lug of position stop 3 in the groove of the bobbin case base and adjust and fasten it according to requirement 2.

13.05.21 Bobbin opener height

Requirement
When bobbin opener 3 is at its left point of reversal, the top edge of its finger should be 0.5 mm above the bottom edge of the bobbin case cam.

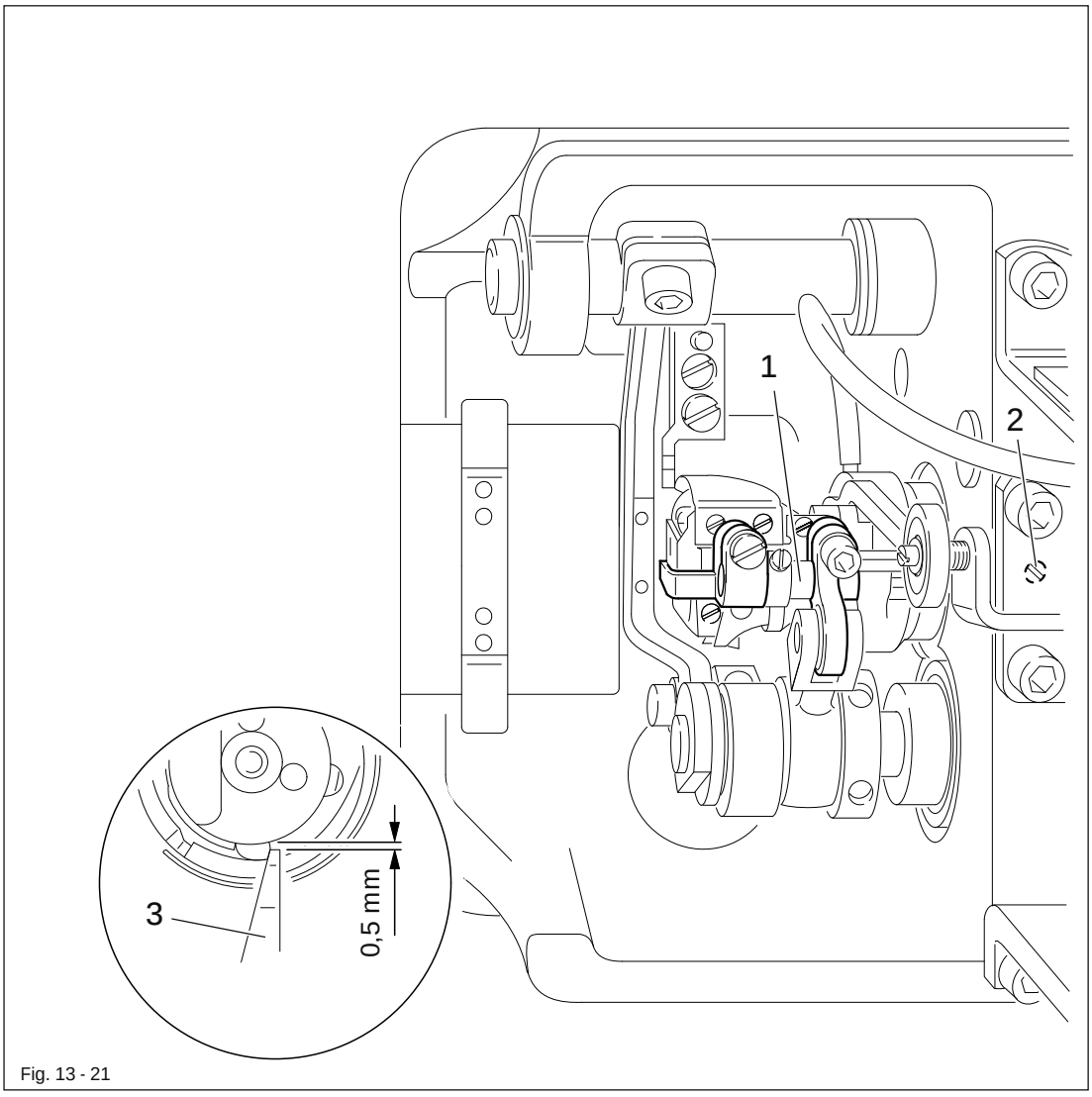

Fig. 13 - 21

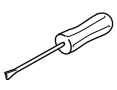

- Loosen screw 2.
- Adjust bobbin opener bearing 1 according to the requirement.
- Tighten screw 2.

13.05.22 Adjustment of the bobbin opener

Requirement

1. The distance between the finger of the bobbin opener 3 and the edge of the bobbin case base 5 must be 0.8 mm.
2. When the bobbin opener 3 is at its left point of reversal, the bobbin case base 5 should be deflected by approx. 0.3 mm by the retaining finger and screw 1 should be resting on stop pin 7.

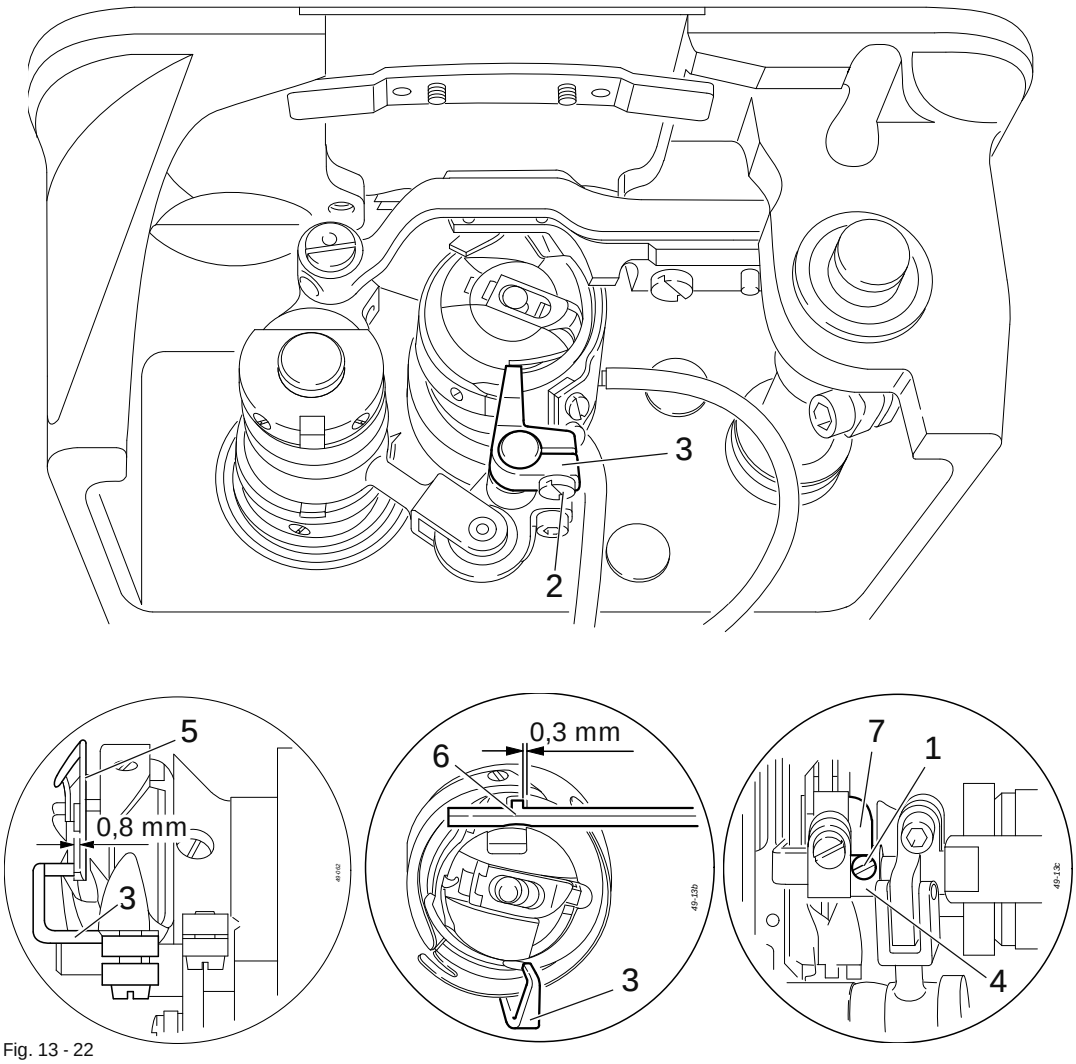

Fig. 13 - 22

- Loosen screw 1 and loosen screw 2 so that the bobbin opener 3 is still held slightly.
- Adjust bobbin opener 3 according to requirement 1.
- Tighten screw 2.
- Adjust retaining collar 4 according to requirement 2.
- Tighten screw 1.

13.05.23 Bobbin case opener

Requirement
When the needle bar is positioned 1.8 mm past b.d.c., the bobbin opener 3 should be at its right point of reversal.

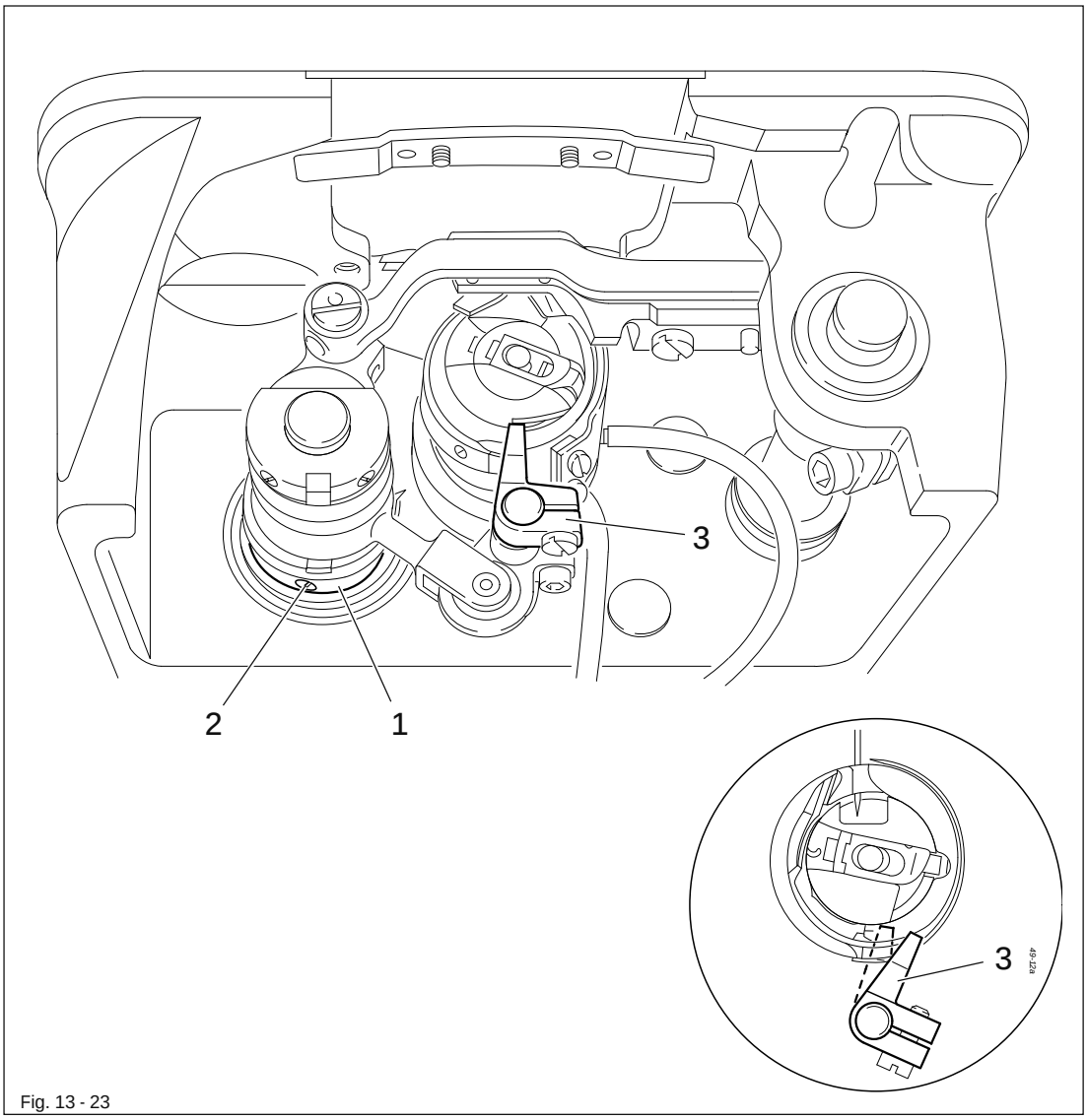

Fig. 13 - 23

- Loosen screws 2.
- Adjust bobbin opener eccentric 1 according to the requirement.
- Tighten screws 2.

For better recognition a screwdriver can be inserted in the slit of bobbin opener 3.

13.05.24 Needle thread tension release

Requirement
When the hand lever 1 is raised, the tension discs should be at least 0.5 mm apart.

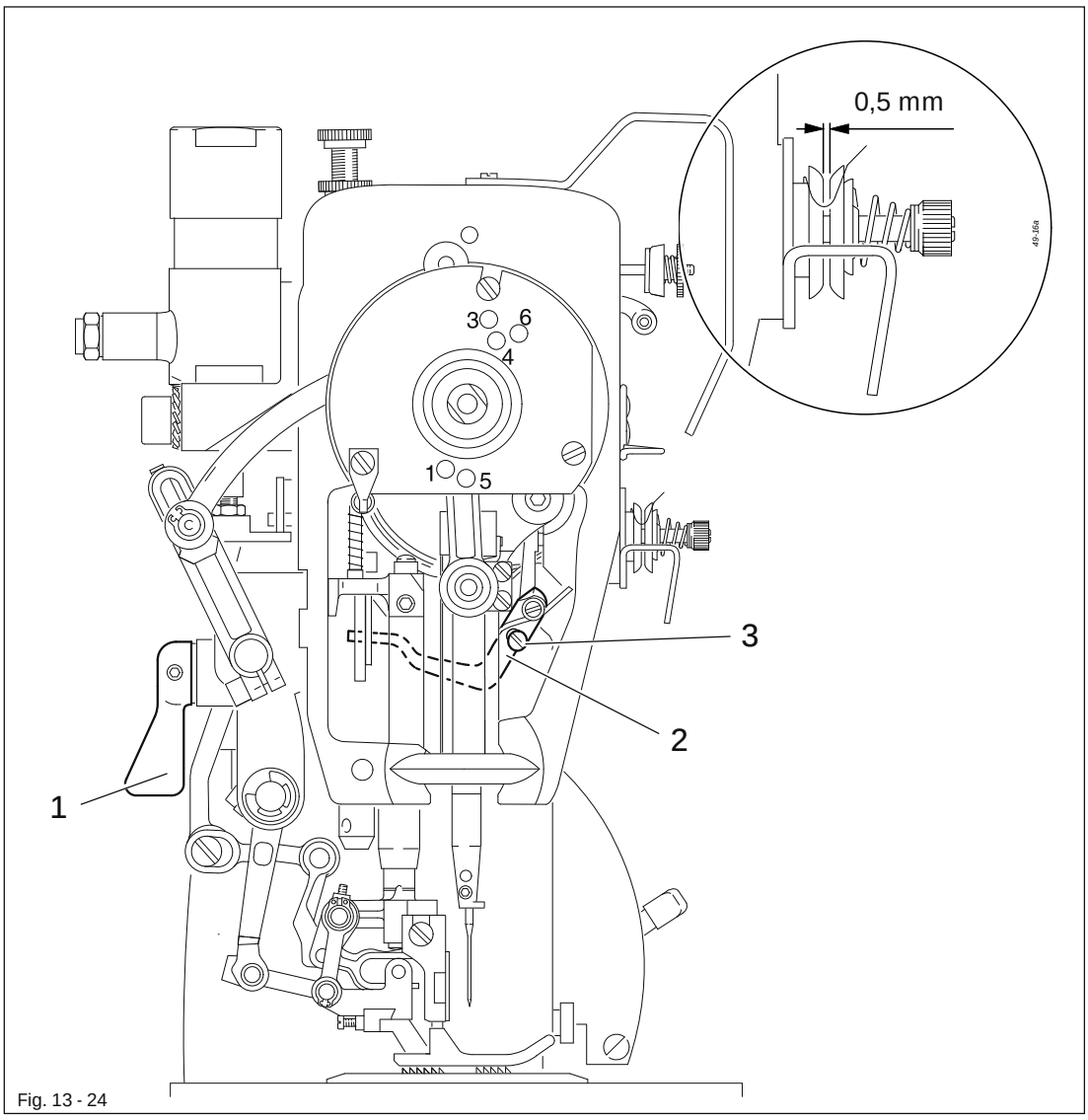

Fig. 13 - 24

- Adjust tension release clip 2 (screw 3) according to the requirement.
- Lower the presser foot onto the needle plate. The tension must now be fully effective.

13.05.25 Thread check spring

Requirement
The movement of the thread check spring 3 must be finished when the needle point enters the material (spring path approx. 7 mm).

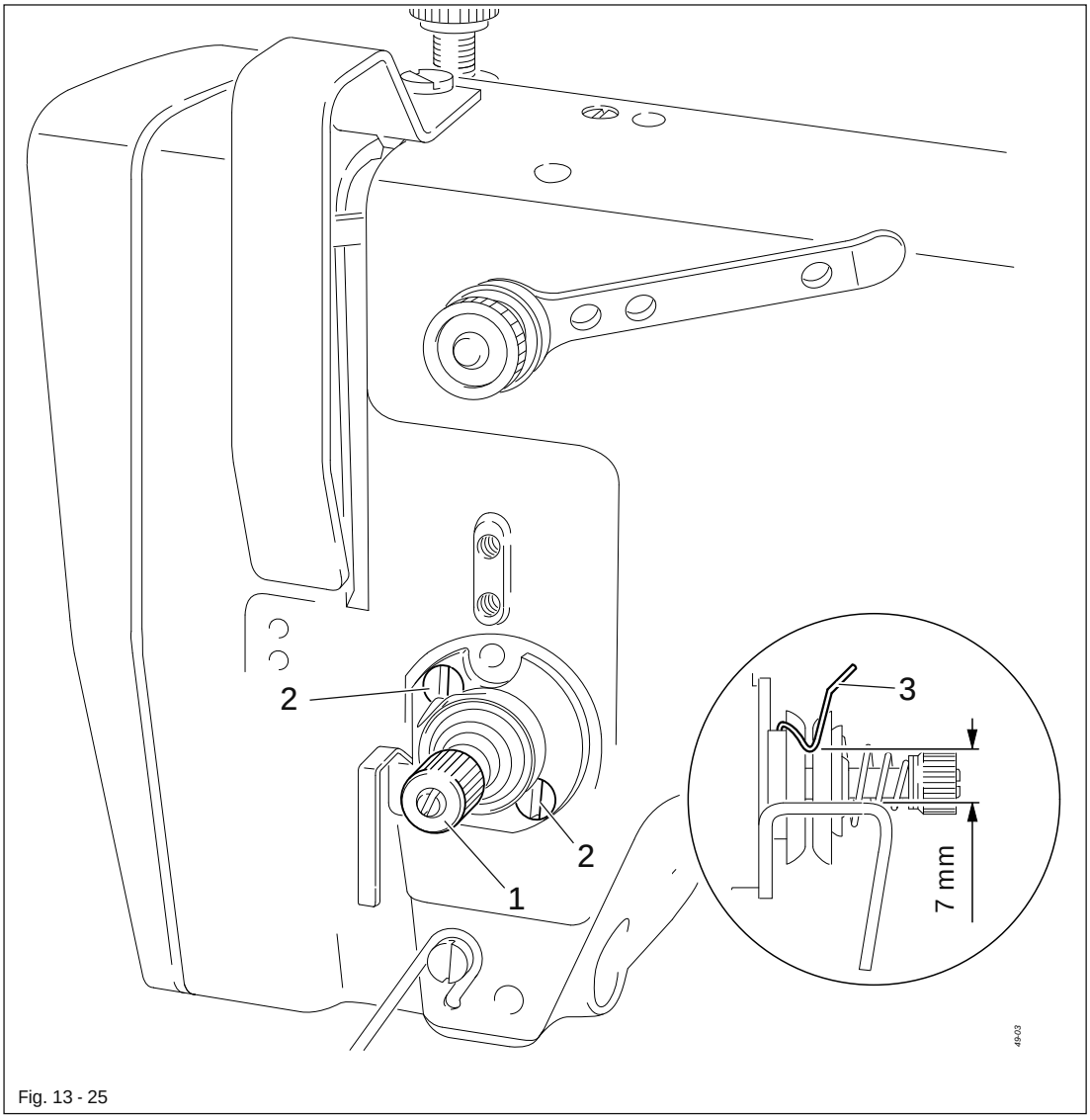

Fig. 13 - 25

- Adjust thread tension 1 (screws 2) according to the requirement.

The path of thread check spring 3 is dependent on the material and thread and must be corrected in accordance with the sewing results.

13.05.26 Bobbin winder

Requirement

1. When the bobbin winder is engaged, the winding spindle must be driven reliably. When it is disengaged, friction wheel 3 must not rest on drive wheel 1.
2. The bobbin winder should switch itself off, when the thread is approx. 1 mm from the edge of the bobbin.

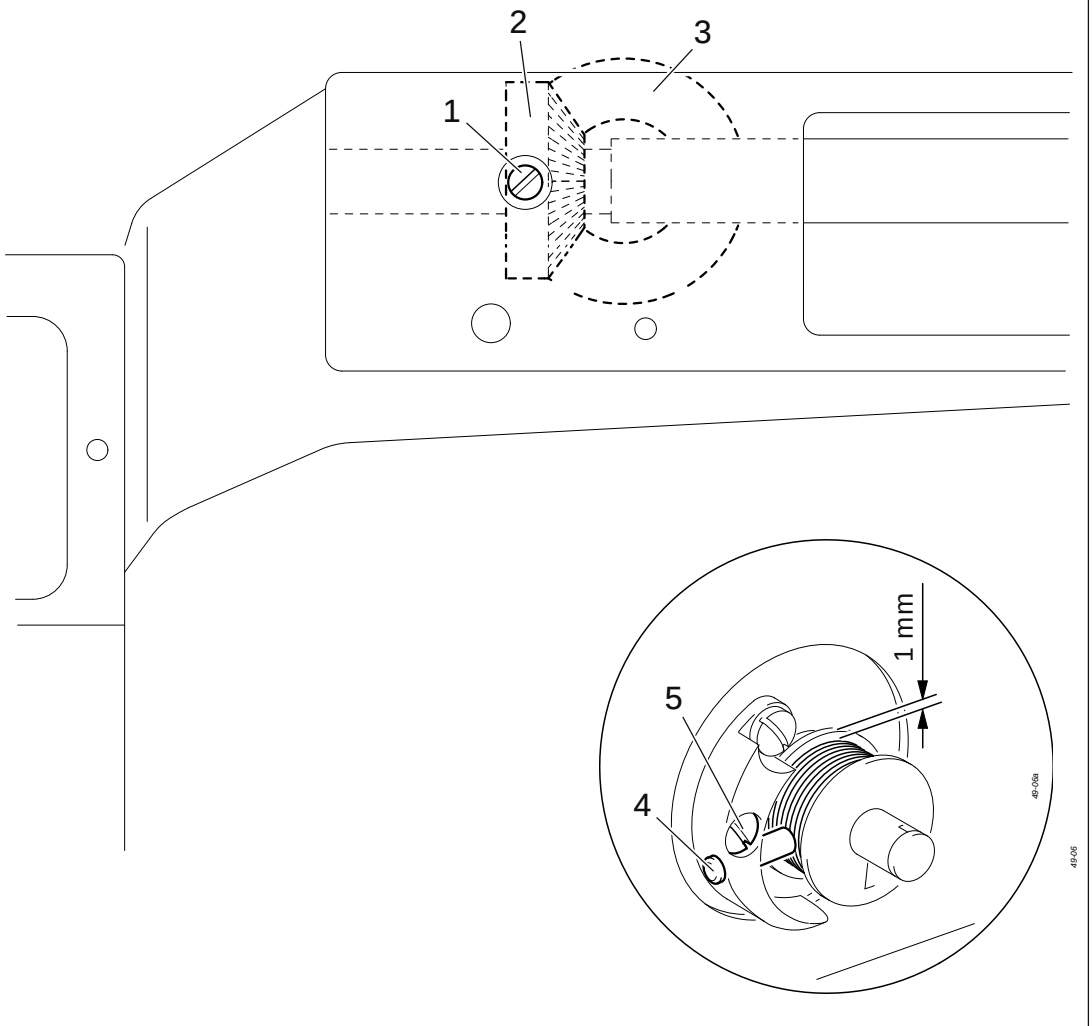

Fig. 13 - 26

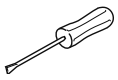

- Raise hand lever and switch on bobbin winder.
- By turning screw 1 position drive wheel 2 on friction wheel 3 according to requirement 1.
- Loosen screw 5 and adjust adjusting pin 4 according to requirement 2.
- Tighten screw 5 again.

13.05.27 Position of the top feed dog in relation to the sewing foot

Requirement
When the take-up lever is at its t.d.c., the teeth of the top feed dog should not be below the presser foot shoe, when the presser foot is raised.

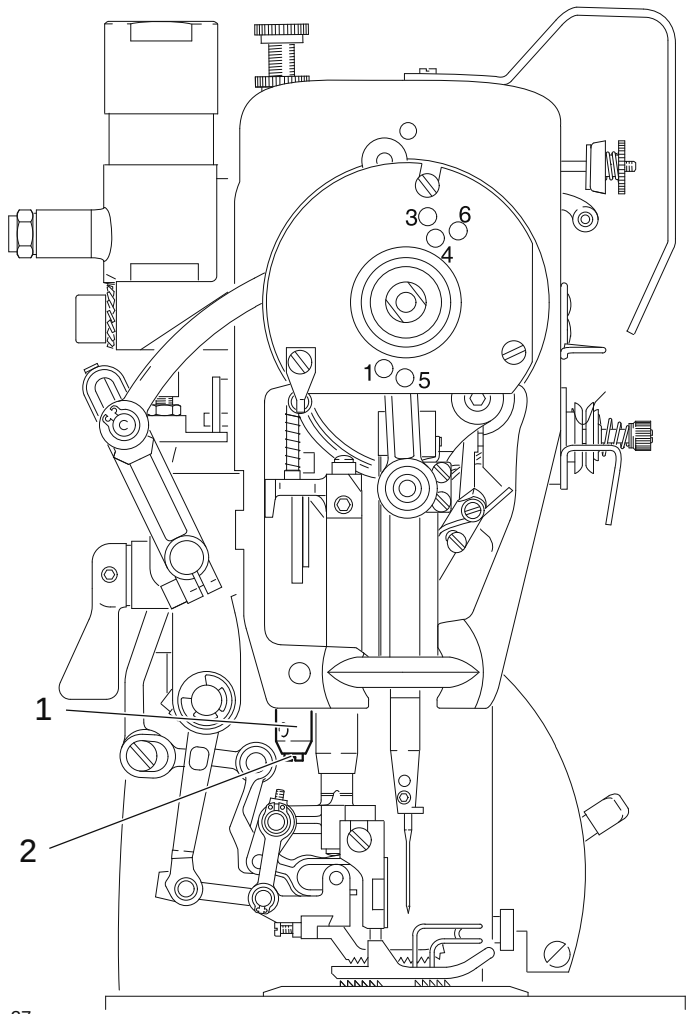

Fig. 13 - 27

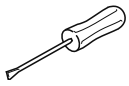

- Adjust eccentric sleeve 1 (screw 2) according to the requirement.

13.05.28 Top feed dog and sewing foot pressure

Requirement
Even at top speed, the material must be fed perfectly. No pressure marks should appear on the material.

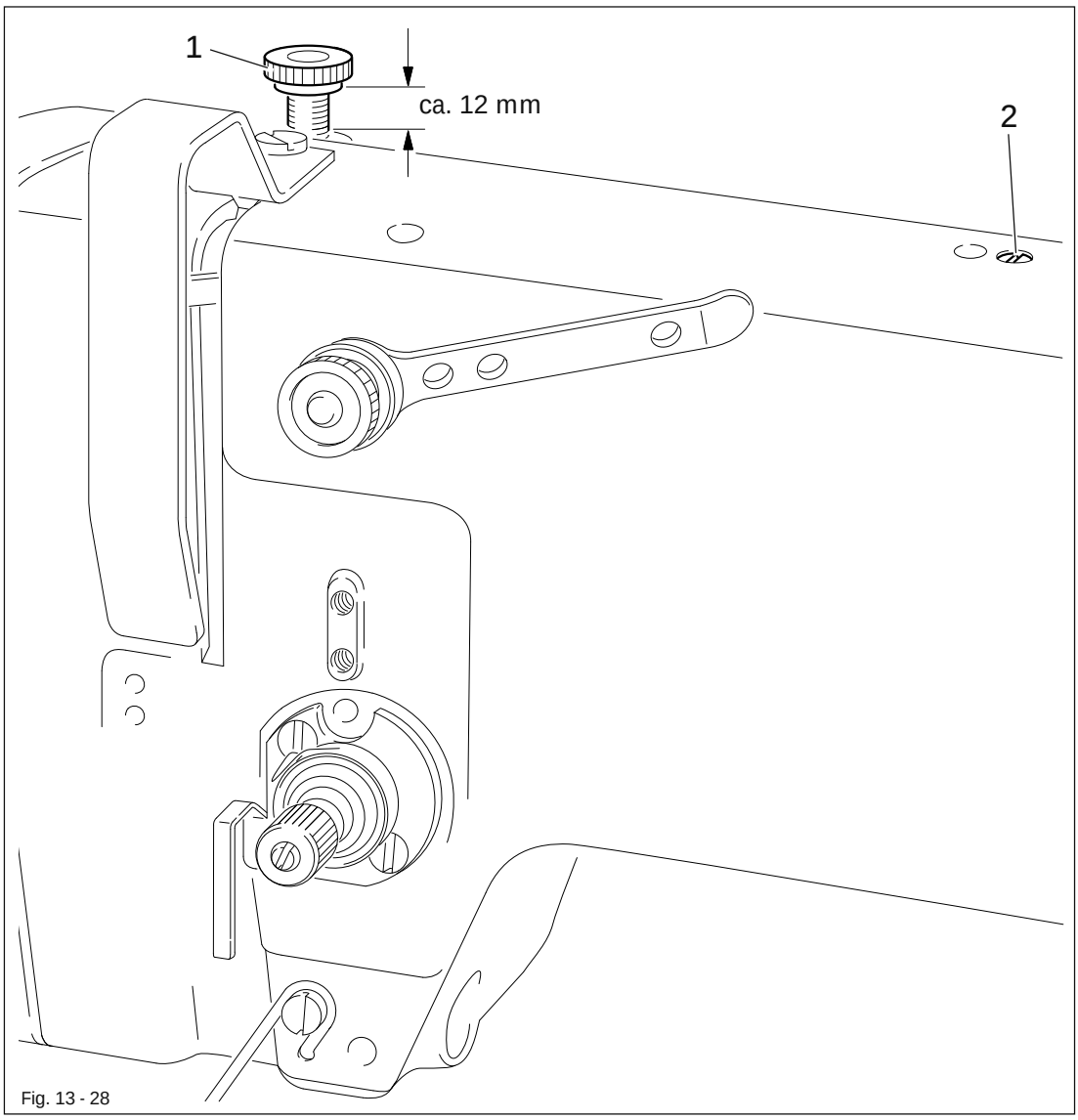

Fig. 13 - 28

- Adjust screws 1 and 2 according to the requirement.

13.05.29 Stitch condensation

Requirement
When cylinder 3 is actuated, the machine must sew with a shorter stitch length than that indicated on the stitch length adjuster.

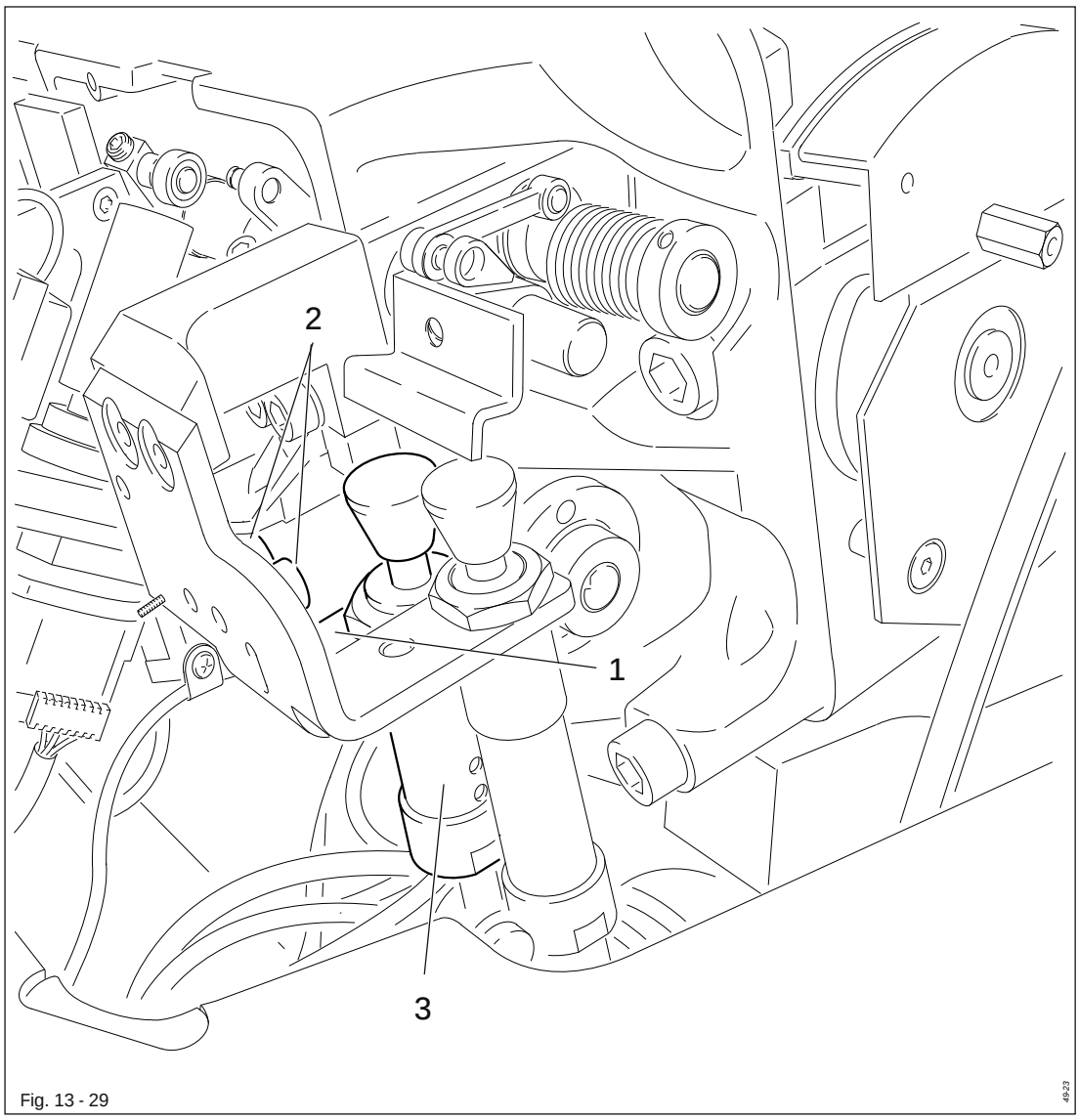

Fig. 13 - 29

- Activate the stitch condensation and sew a test seam.
- If necessary adjust retaining bracket 1 (screws 2) accordingly.

13.06 Adjusting the thread trimmer

13.06.01 Pre-adjusting the control cam

Requirements
At the t.d.c of the needle bar,
1. the beginning of the highest point of the trip of the control cam 6 sould be positioned under the tip of pawl 8 and
2. the right-hand side of the trip should be flush with the right-hand side of pawl 8.

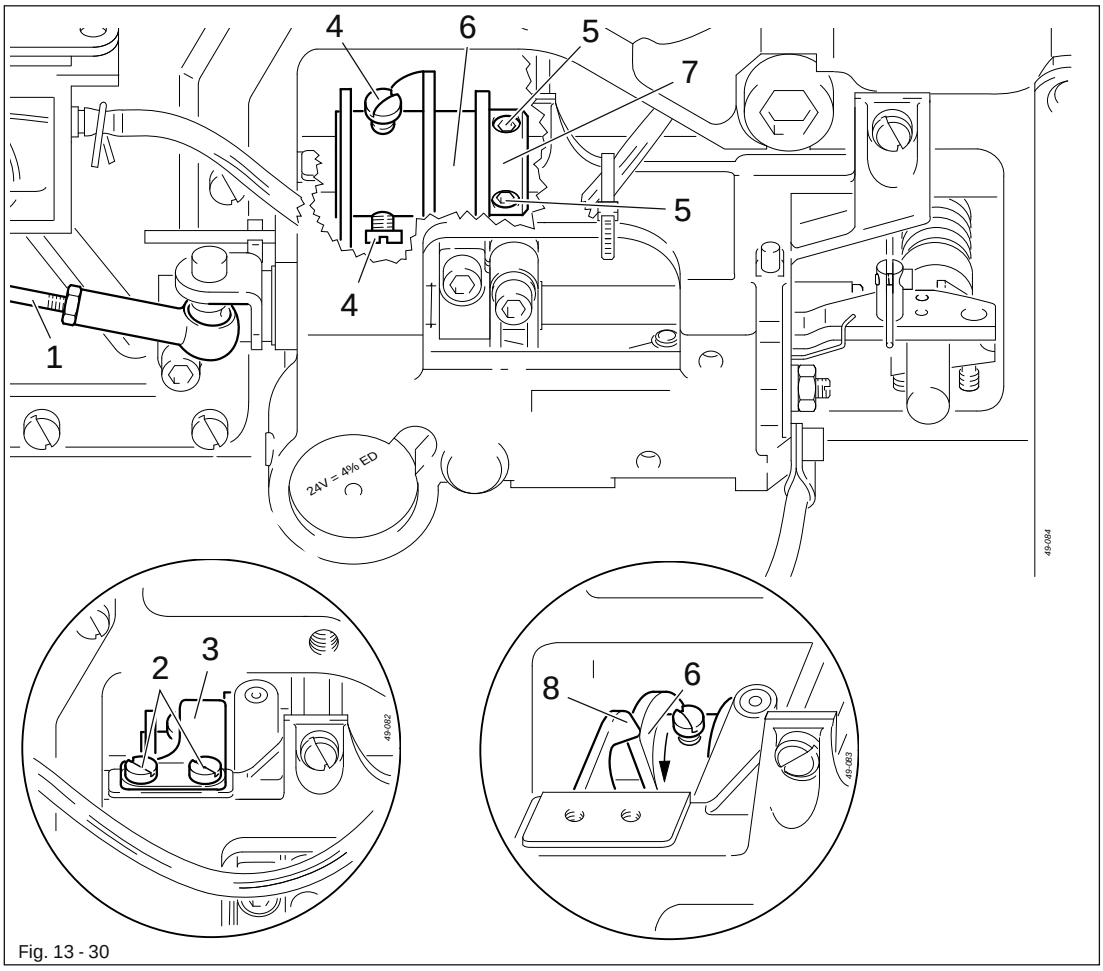

Fig. 13 - 30

- Pull the ball heads of connecting rod 1 off the ball pin at the cutting and control units and remove connecting rod 1.
- Loosen screws 2 and retaining spring 3 together with the cover disk.
- Loosen screws 4 and 5.
- Twist or shift control cam 6 in accordance with requirement 1 or requirement 2 as required.
- Tighten screws 4 firmly.
- Push fixing collar 7 onto control cam 6.
- Tighten screws 5 firmly.

Connecting rod 1 and retaining spring 3 stay dismantled for further adjustments.

13.06.02 Roller lever

Requirements
When the needle bar is positioned 1.8 mm after the b.d.c,
1. the roller of the roller lever 4 should engage easily with the control cam 7 and
2. the roller of roller lever 4 should be centred in the cam notch of the control cam 7

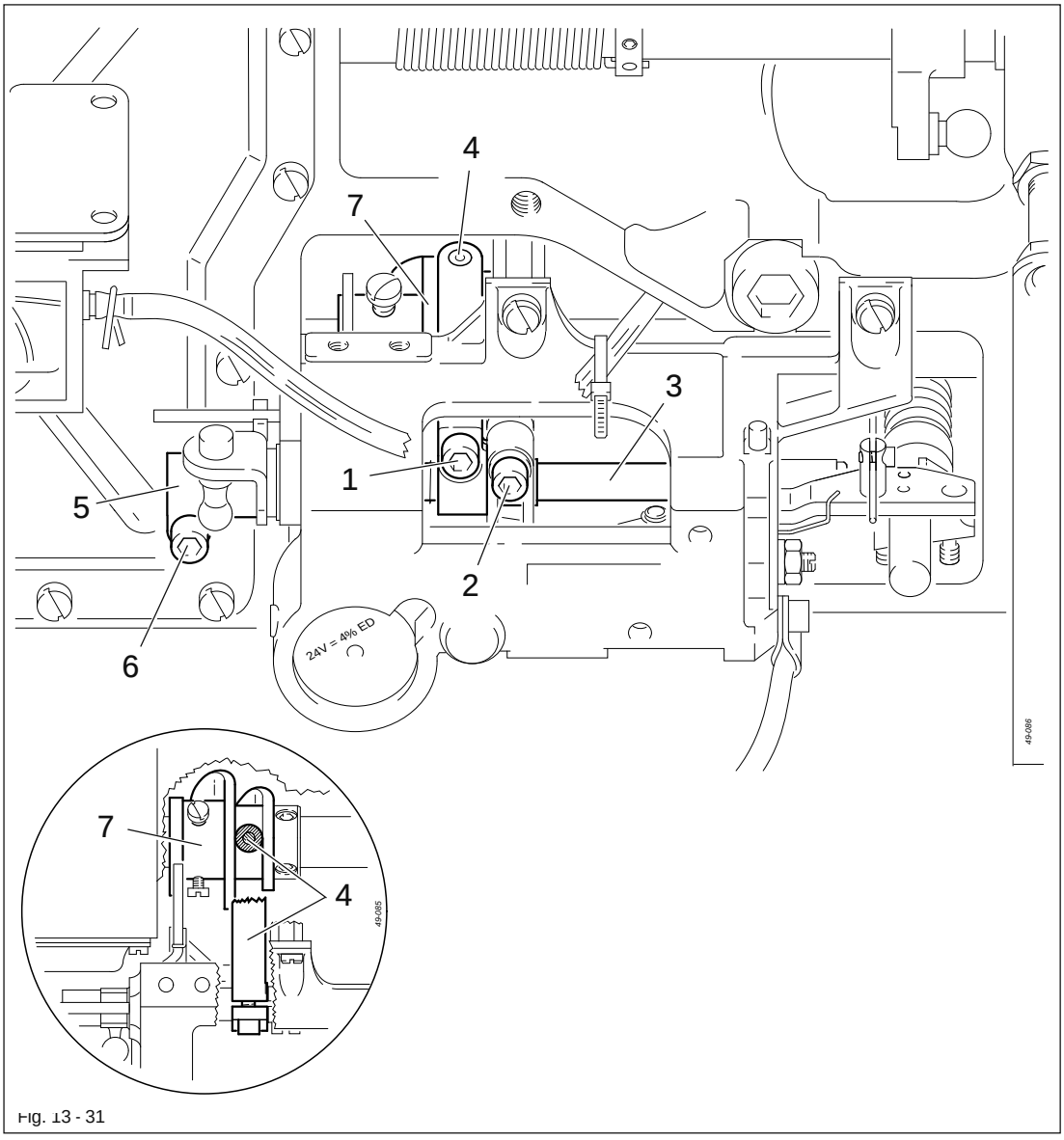

Fig. 13 - 31

- Unscrew screws 1 and 2.
- Put pressure on rockshaft **3** to the right.
- Adjust roller lever 4 in accordance with requirements 1 and 2.
- Tighten screw 1 firmly.
- Position the surface of the fixing collar 5 (bolt 6) parallel to the base plate.

Screw 2 stays undone for the following adjustment.

13.06.03 Pawl

Requirement
With the thread trimmer in resting position, the distance between pawl 2 and the highest point of the control cam should be 0.3 mm.

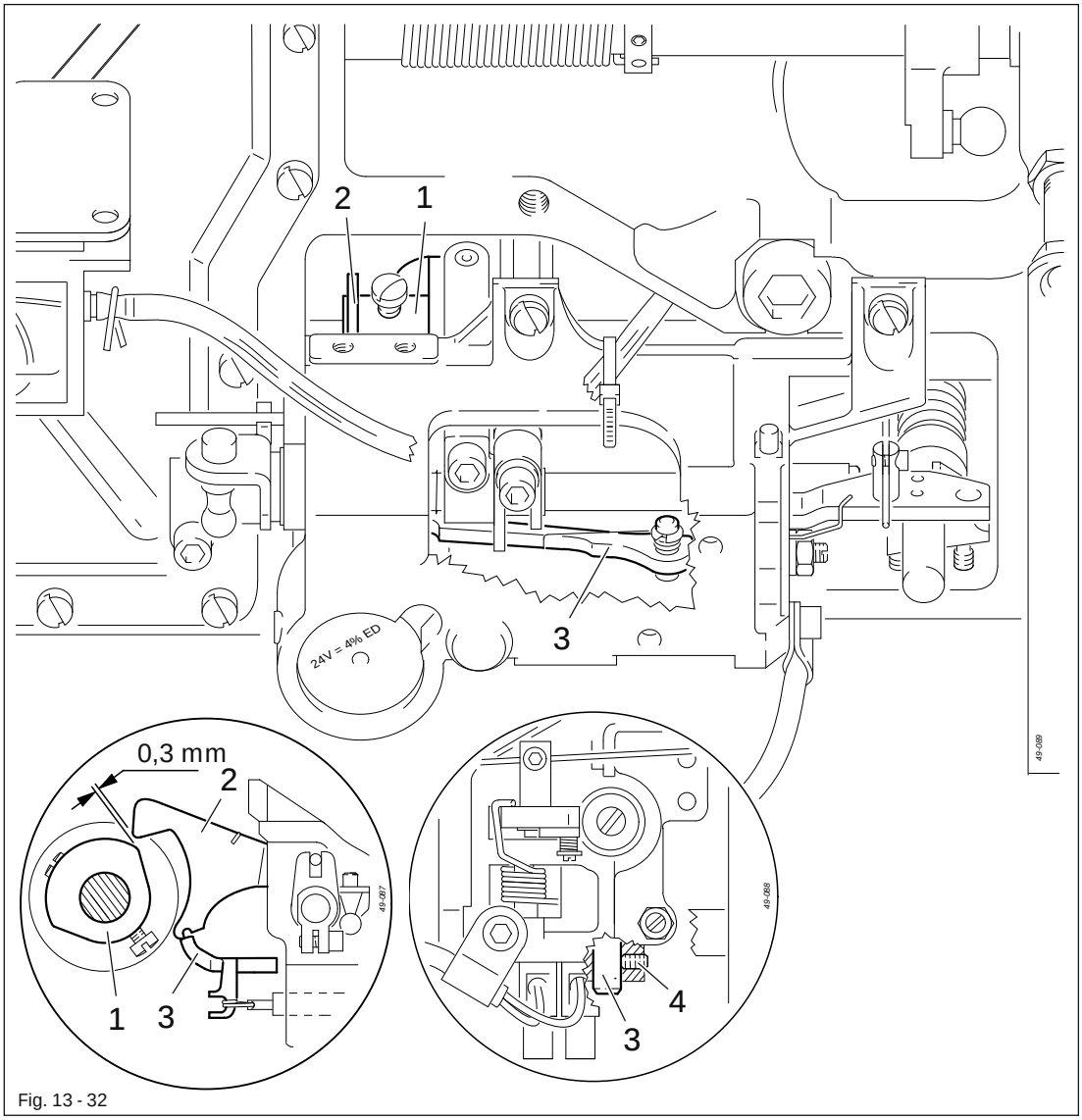

Fig. 13 - 32

- Position the bearing surface of control cam 1 with its highest point below pawl **2** by turning the hand wheel.
- Shift pin 3 (screw 4) in accordance with the requirement.

13.06.04 Engaging solenoid

Requirement
When the needle bar is positioned 1.8 mm after the b.d.c and the engaging solenoid is actuated, the distance between the engaging lever 1 and the pawl 2 should be between 0.2 and 0.3 mm.

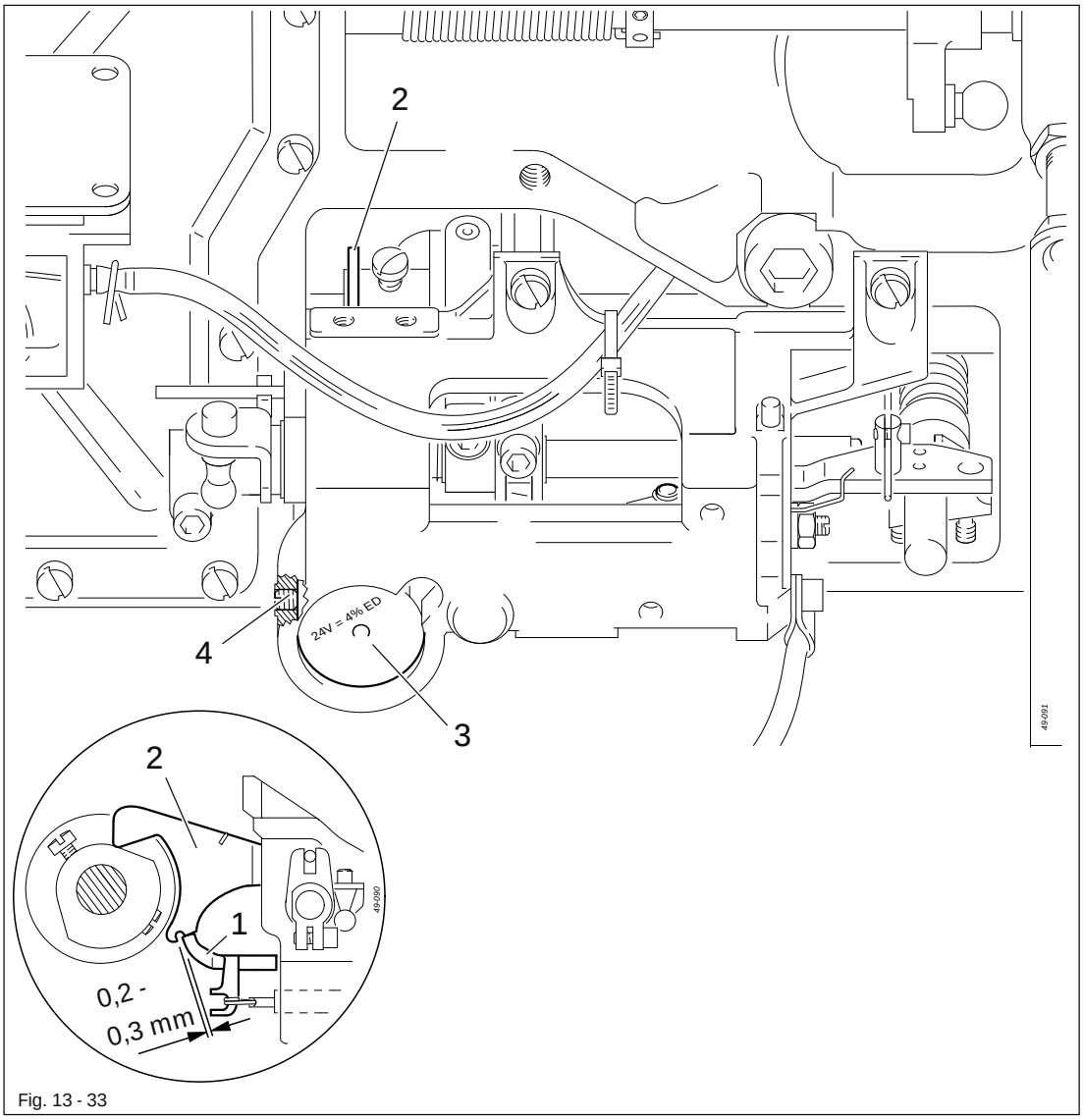

Fig. 13 - 33

- Position the needle bar 1.8 mm after b.d.c
- Manipulate engaging lever 1 until pawl 2 engages.
- Push magneto inductor into the magnet housing 3 as far as possiblt and move magnet housing 3 (screw 4) together with the magneto inductor in accordance with the requirement.

13.06.05 Release lever

Requirement
When the needle bar is positioned 1.8 mm after the b.d.c and the engaging lever **1** is actuated, the distance between the roller of the roller lever **2** and the bottom of the control cam 3 must be approx. 0.2 mm.

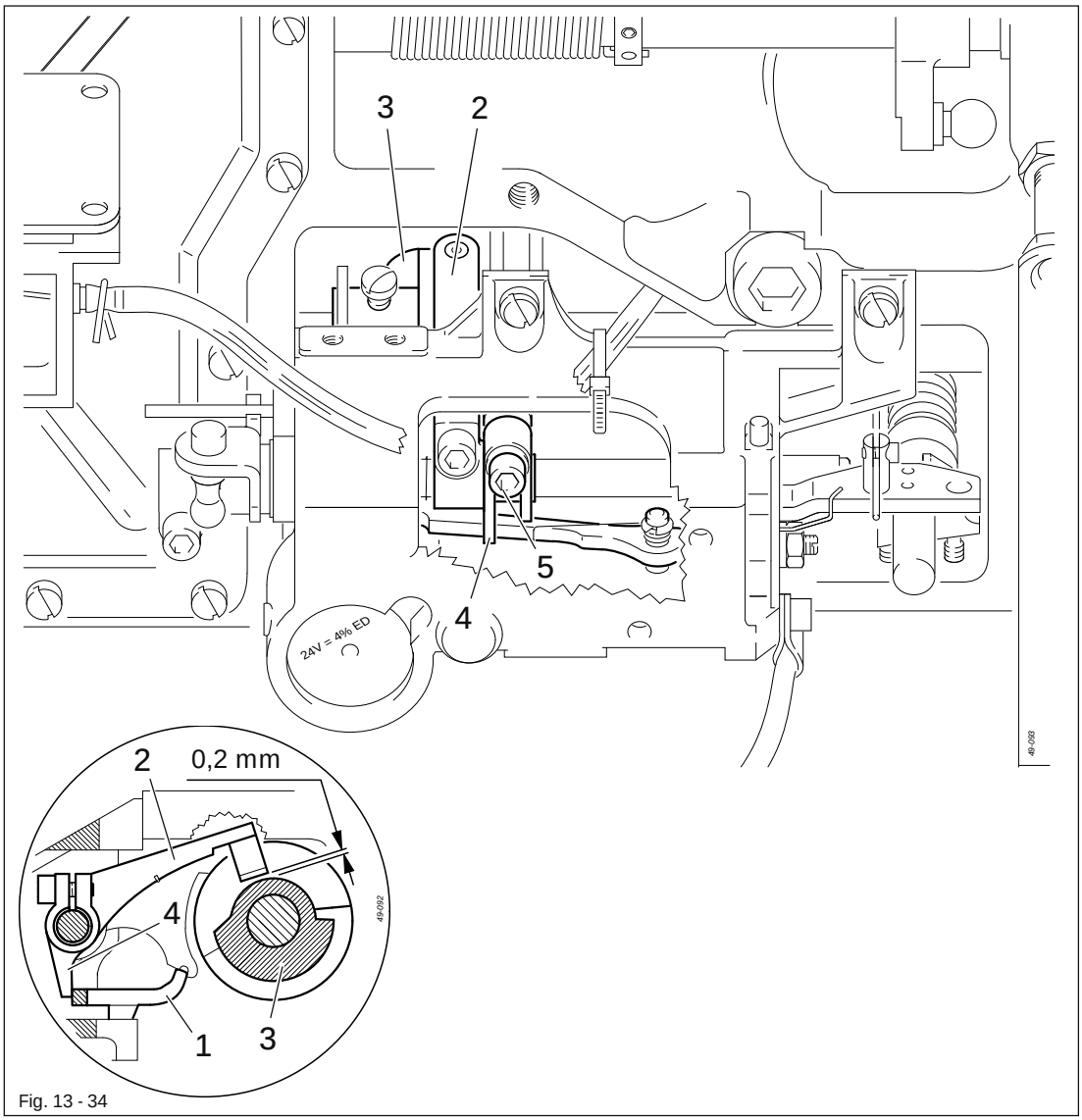

Fig. 13 - 34

- Position needle bar 1.8 mm after b.d.c
- Activate engaging lever 1 manually.
- Push roller lever 2 onto the bottom of control cam 3.
- Tighten screw 5 slightly.
- Push release lever 4 onto engaging lever 1.
- Adjust the distance to control cam 3 to approx. 0.2 mm by tapping the roller lever 2 and measuring repeatedly with lever 4 which must be in constant lateral contact with roller lever 2.
- Tighten screw 5 firmly.

13.06.06 Engaging lever

Requirement
When the needle bar is at the t.d.c and the thread trimmer is in resting position, the distance between the roller of the roller lever 3 and the outer diameter of the control cam 4 should be between 0.3 and 0.5 mm.

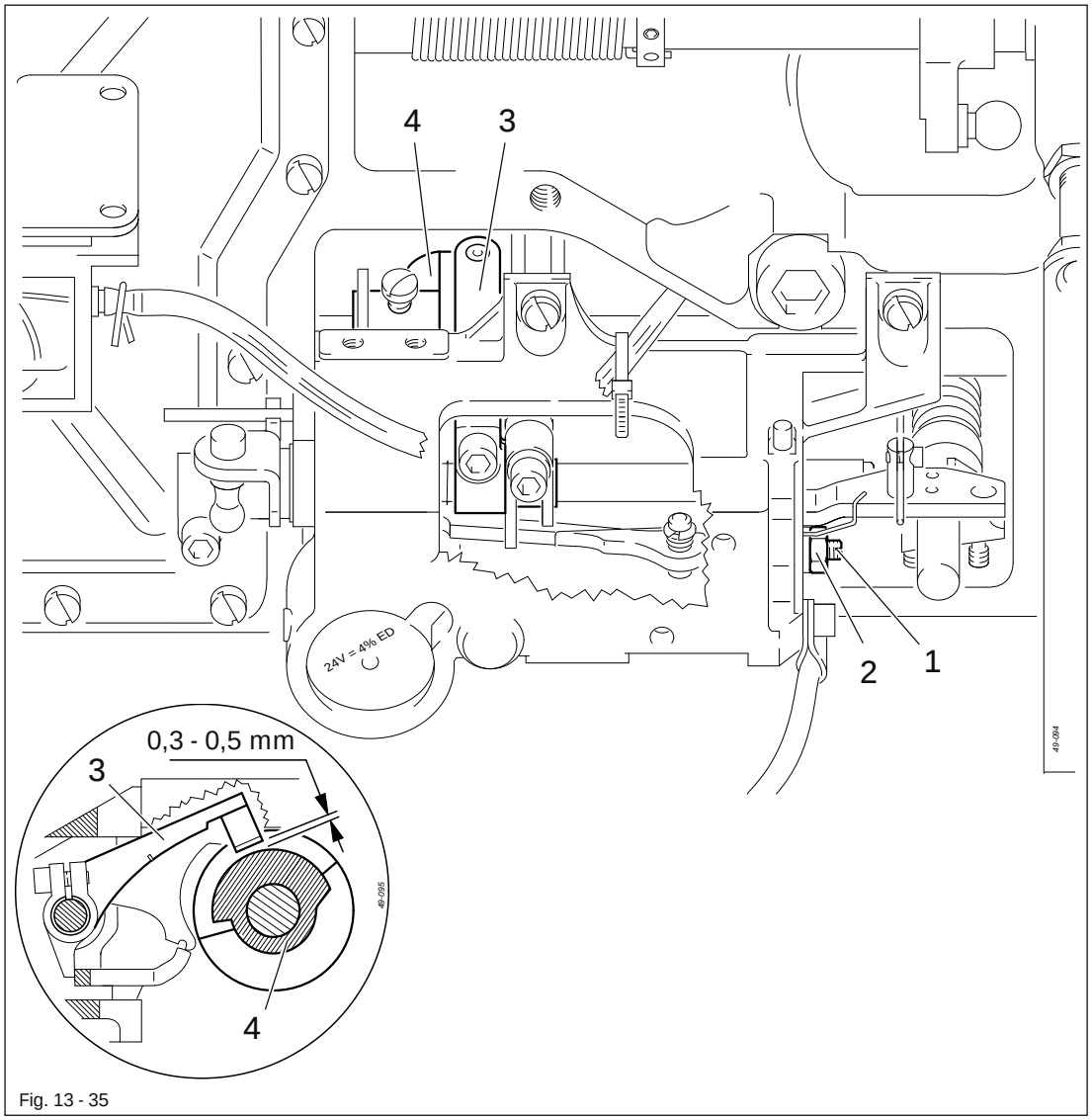

Fig. 13 - 35

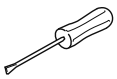

- Turn screw 1 (nut 2) in accordance with the requirement.
- Check distance in accordance with the requirement.

13.06.07 Lateral adjusting of the thread catcher

Requirement
1. The tip of the thread catcher 6 should point exactly to the middle of the needle.
2. The thread catcher 6 should not touch anywhere when in motion.

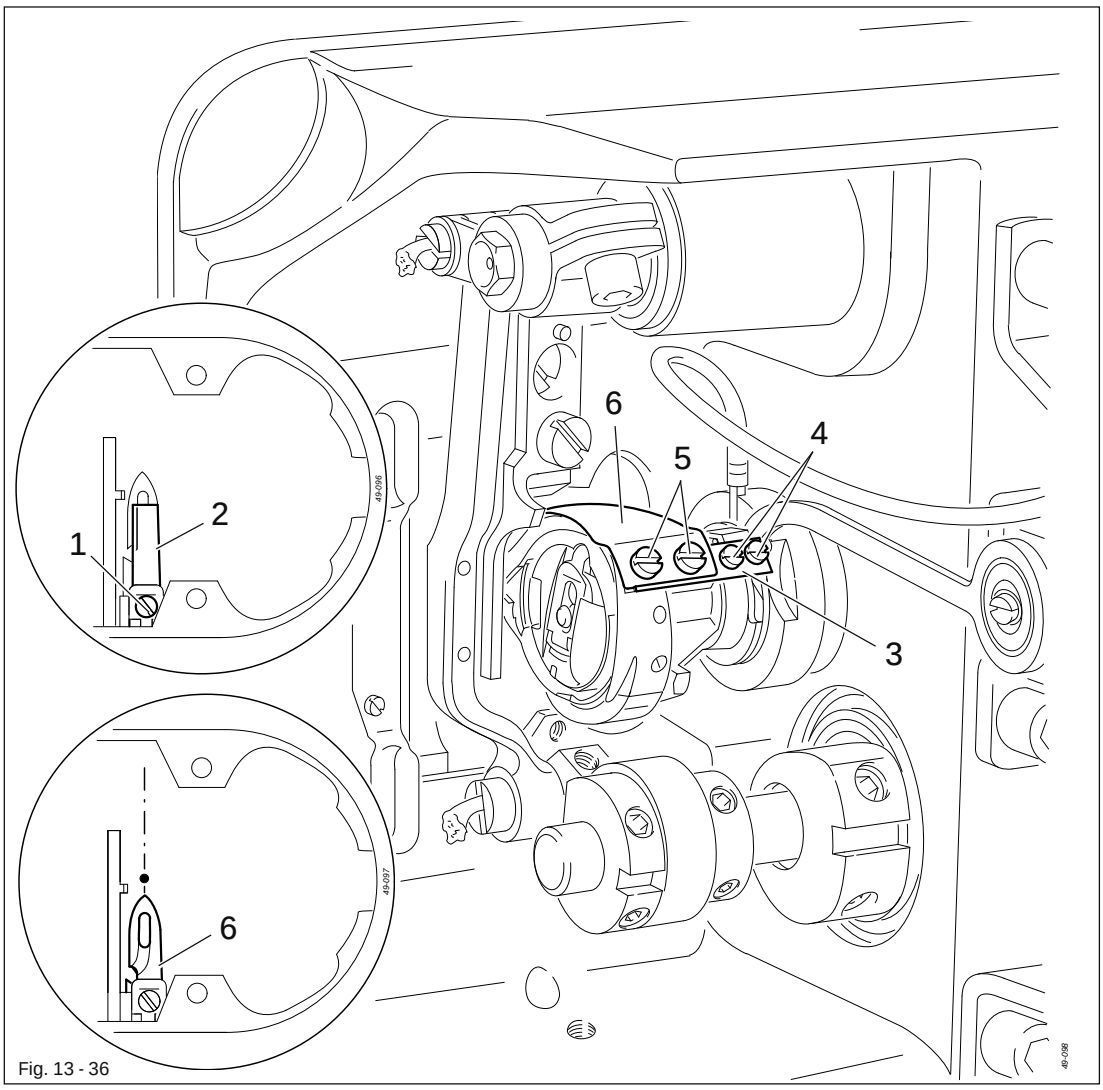

Fig. 13 - 36

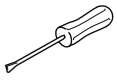

- Unscrew needle plate and feed dog.
- Loosen screw 1 and remove knife 2.
- Position needle bar at b.d.c
- Push aside catcher stop 3 (screws 4).
- Loosen screws 5.
- Position the tip of thread catcher 6 in front of the needle by moving the thread catcher carrier.
- Adjust thread catcher 6 laterally in accordance with requirement 1.
- Tighten screws 5 firmly ensuring that the back of the thread catcher is horizontal.



Needle plate, feed dog, knife 2 and catcher stop 3 stay dismantled for the following adjustments.

13.06.08 Front reversal point of the thread catcher

Requirement
In the front reversal point of the thread catcher 3 the rear edge of thread catcher cutout should be 1 mm in front of the bobbin case position finger 4.

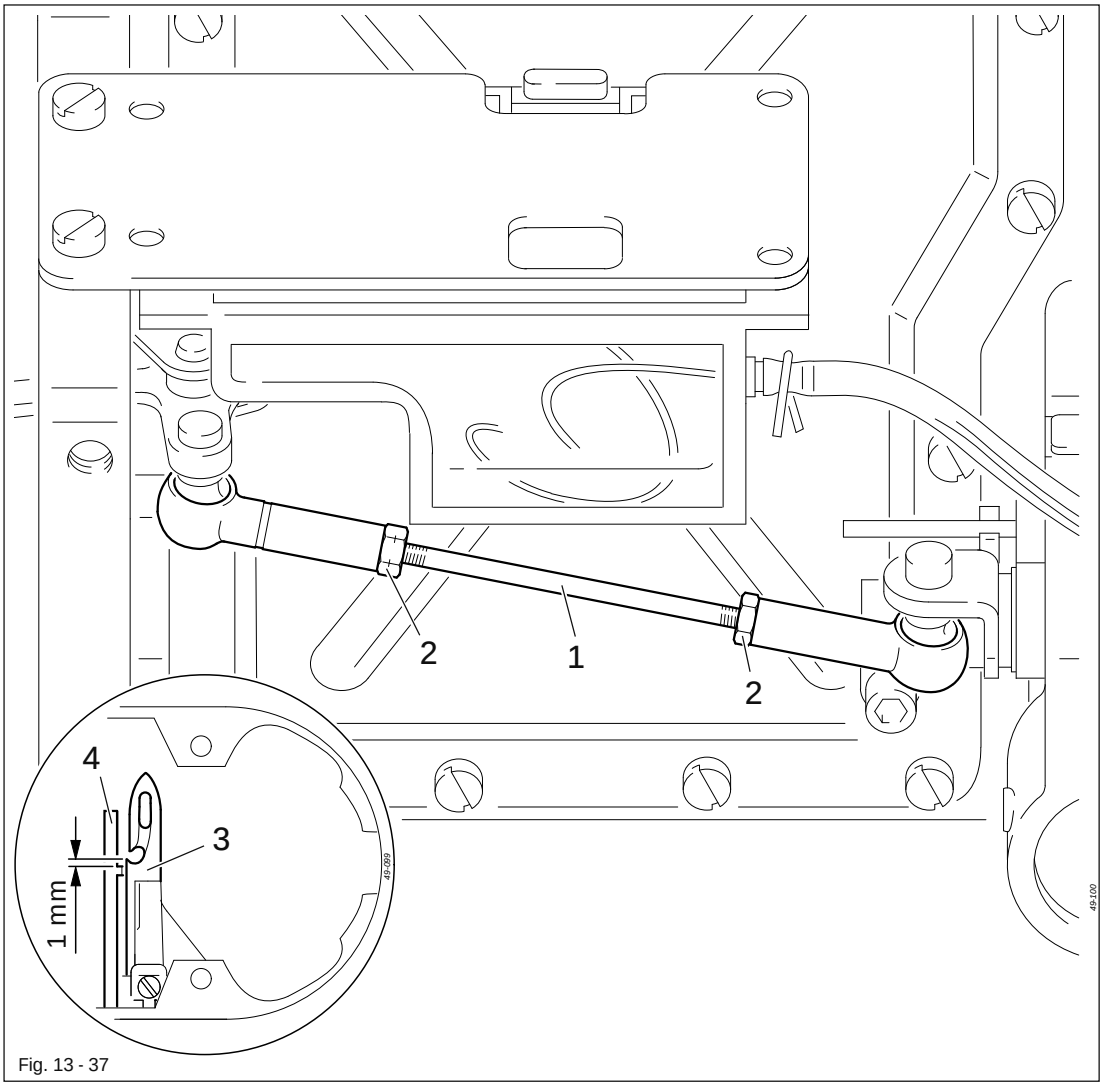

Fig. 13 - 37

- Push balls of the connecting rod 1 onto the ball pins on the cutting and control units.
- Loosen nuts 2 (right-hand and left-hand thread).
- Position needle bar at t.d.c
- Activate the engaging lever manually.
- Bring thread catcher 3 to its front point of reversal by turning the hand wheel.
- Turn connecting rod 1 in accordance with the requirement.
- Lock connecting rod 1 by means of nuts 2.

13.06.09 Re-adjusting the control cam

Requirement
When the end of the hook plate 1 is positioned 2 mm behind the middle of the lug of the bobbin case position finger, the distance between the tip of the thread catcher 6 and the middle of the lug should also be 2 mm.

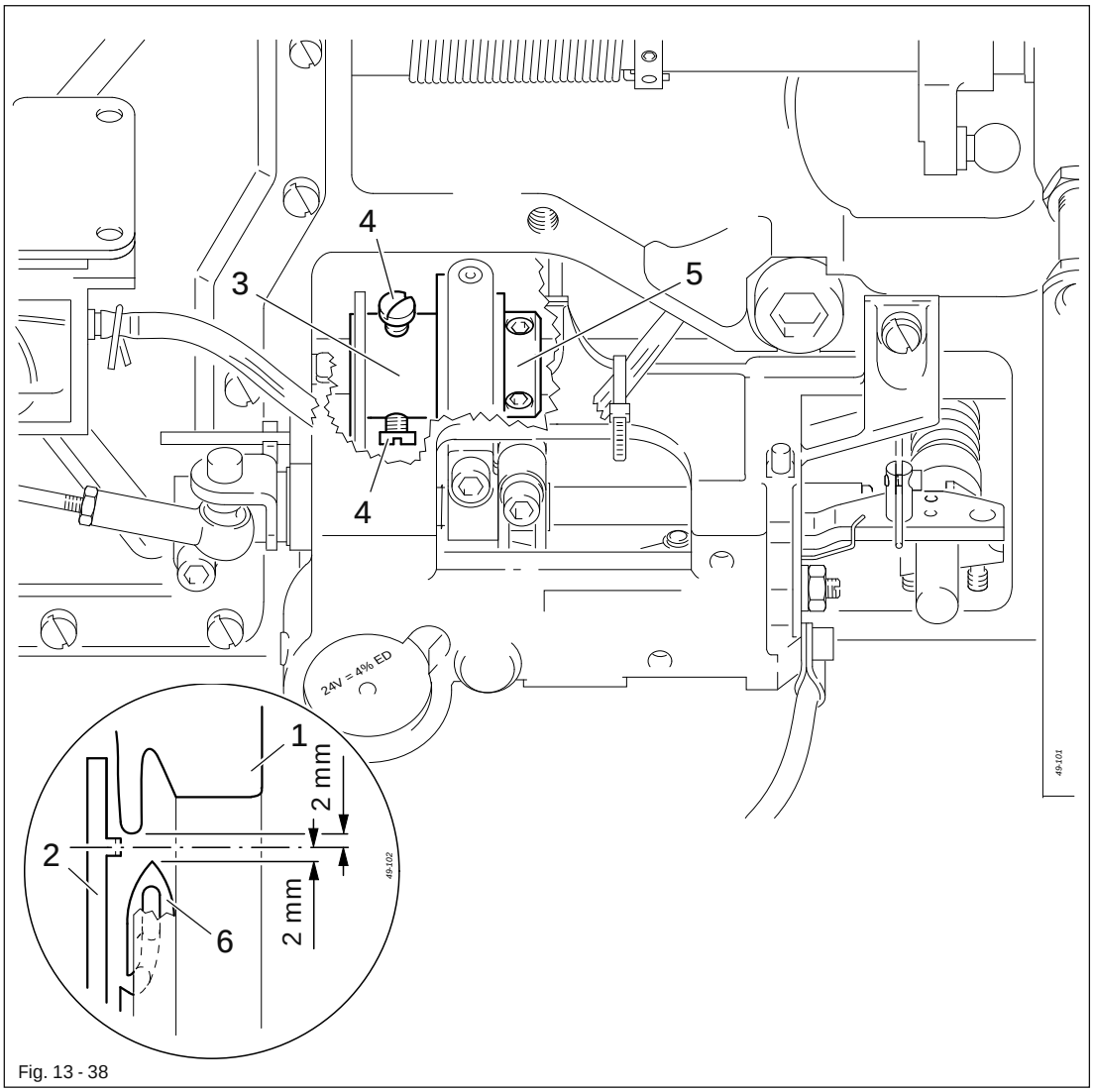

Fig. 13 - 38

- Position the needle bar at b.d.c
- Activate the engaging lever manually.
- Turn the hand wheel until the distance between the end of hook plate 1 and the middle of the lug of the bobbin case position finger 2 is 2 mm.
- Turn control cam 3 (screws 4) in accordance with the requirement and bring it into contact with fixing collar 5.

13.06.10 Retaining spring

Requirement
When the thread trimmer is in resting position, the distance between the retaining spring 1 and the roller lever **3** should be 0.5 mm.

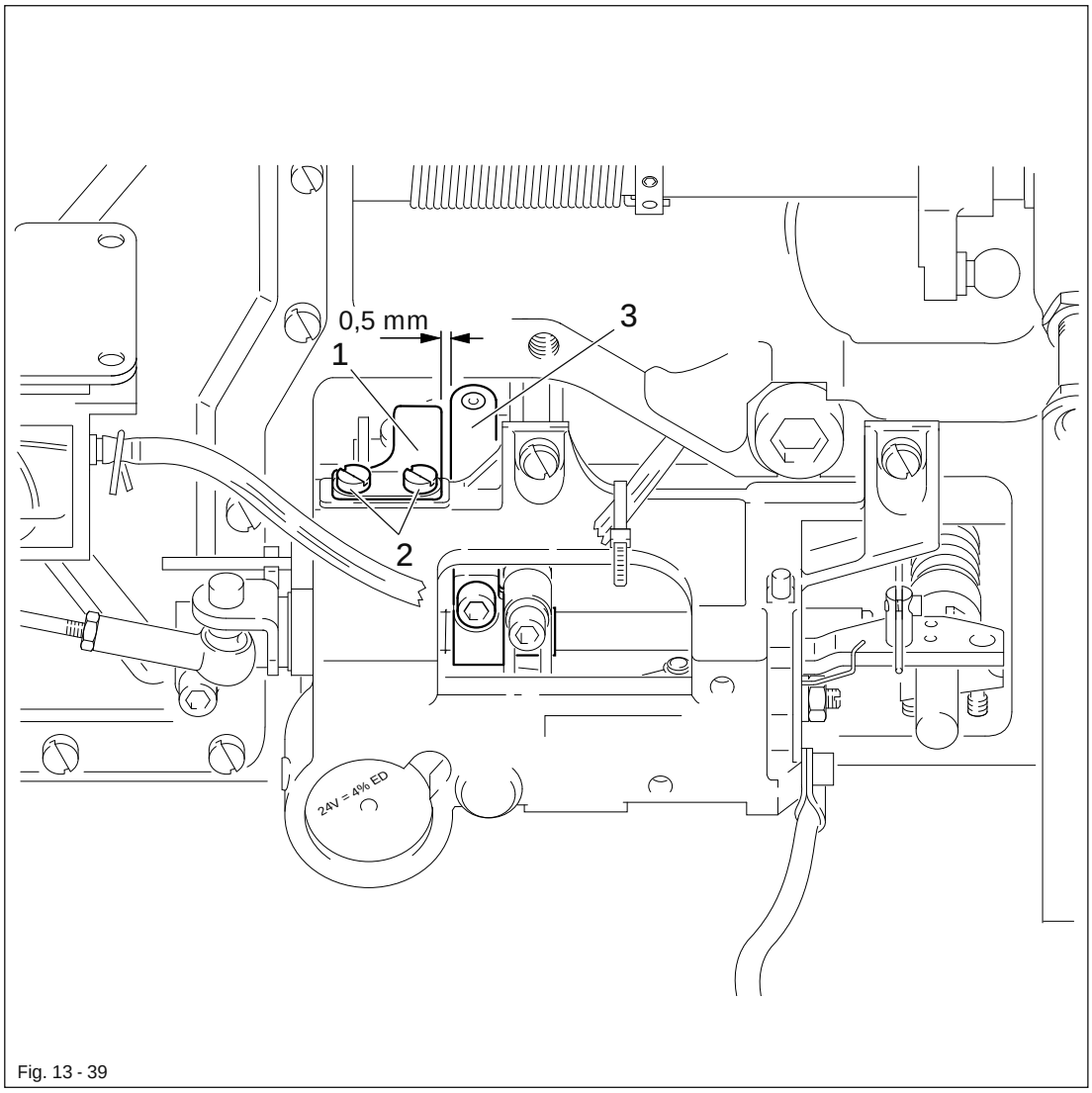

Fig. 13 - 39

- Position retaining spring 1 together with the cover disk.
- Tighten screws 2 sligthly.
- Push retaining screw 1 up to the stop and adjust in accordance with the requirement.
- Tighten screws 2 firmly.

13.06.11 Knife to needle clearance

Requirement
The distance between the front edge of the knife 1 and the needle should be 4 mm.

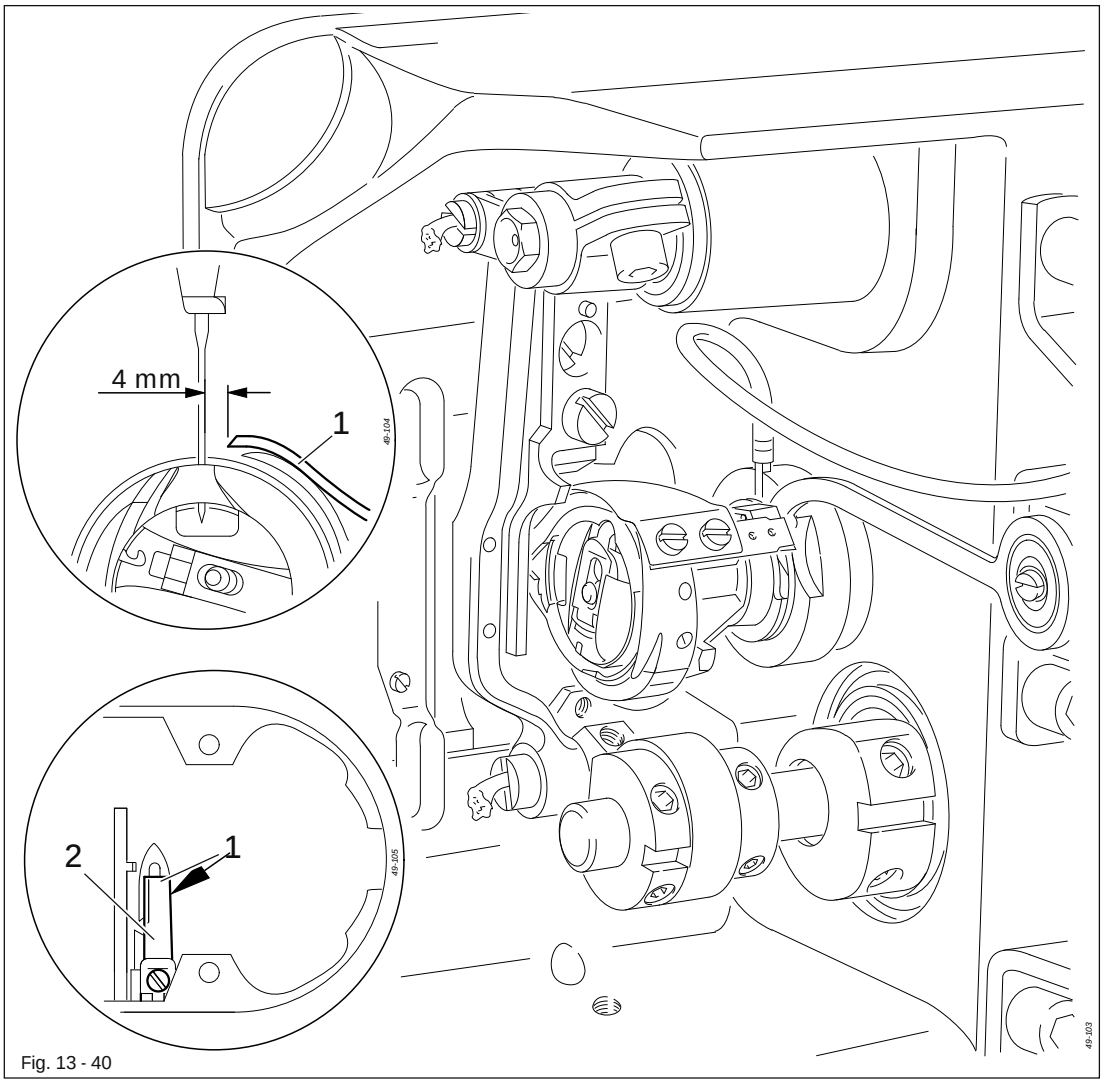

Fig. 13 - 40

- On needle-feed machines set the stitch length to "O".
- Position the needle bar at b.d.c
- Push knife 1 under the safety plate and align in accordance with the requirement.
- Tighten screw 2 slightly.
- Activate the engaging lever manually.
- Turn the hand wheel until the cutting point in the thread catcher is positioned immediately in front of the knife blade.
- Adjust knife 1 so that the right edge of the knife does not protrude over the right edge of the thread catcher (see arrow).
- Tighten screw 2 firmly.

13.06.12 Manual trimming control

Requirement
Both threads have to be cut perfectly in the catcher cutout on both right and left-hand side.

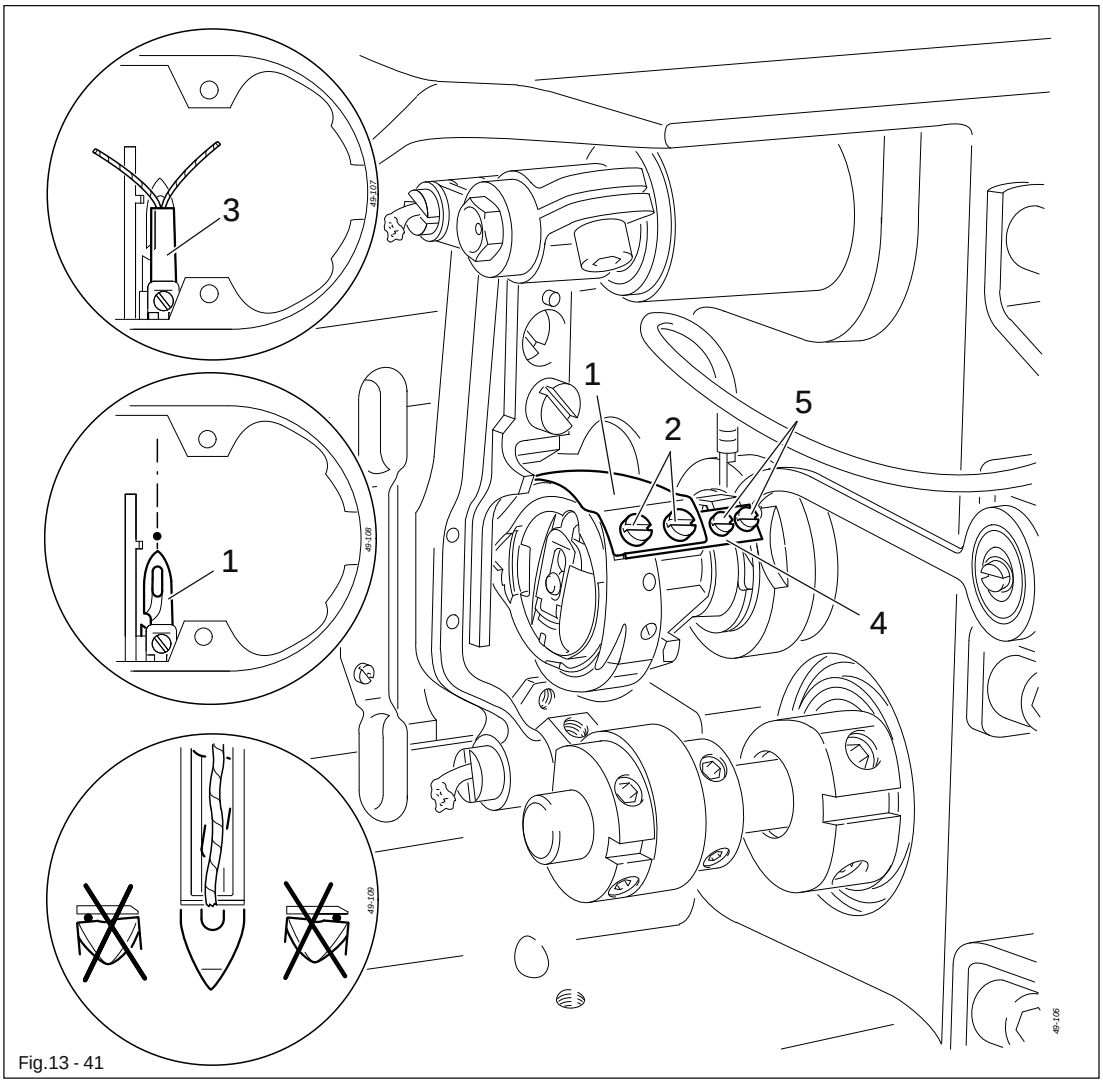

Fig.13 - 41

- Position the needle bar at b.d.c and activate the engaging lever manually.
- Turn the hand wheel until thread catcher 1 is its front reversal point.
- Double a thread and insert it into the cutout of thread catcher 1.
- Turn the hand wheel further until the trimming process is finished.
- If both threads are not trimmed in accordance with the requirement, loosen screws 2 and align thread catcher 1 with respect to knife 3 .
- Make sure that the tip of the thread catcher is pointing to the centre of the needle and tighten screws 2 firmly.
- Move catcher stop 4 onto thread catcher 1 and tighten screws 5 firmly.
- Screw on feed dog and needle plate, making sure that the movement of the feed dog in the needle plate cutout is not restricted.

13.06.13 Tension release of needle thread

Requirements

1. When the thread trimming unit is in resting position, trip 5 should be engaged and at a distance of 0.5 mm from the release cone 1.
2. When trip 5 is positioned at the highest point of the release cone 1, the tension disks should be spaced at a mimimum of 0.5 mm from each other.

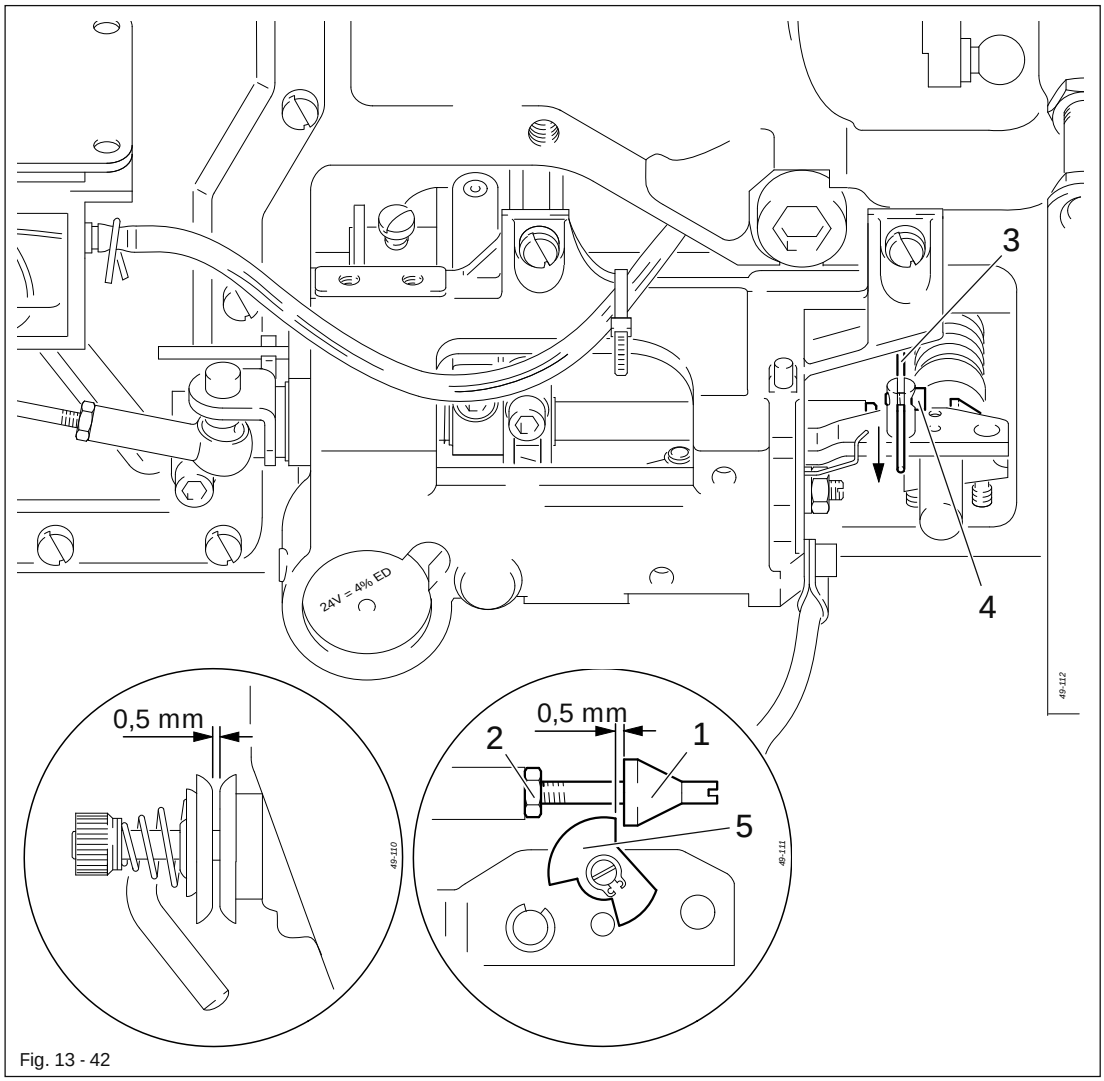

Fig. 13 - 42

- Turn release cone 1 (nut 2) in accordance with requirement 1.
- Lower the presser foot onto the needle plate.
- Pull out the thread from between the tension disks.
- Pull down linkage 3 (screw 4) until you feel it stop.
- Position the needle bar at b.d.c and activate the engaging lever manually.
- Turn the hand wheel until trip 5 is positioned at the highest point of release cone 1.
- The tension disks now have to be spaced at a minimum of 0.5 mm from each other.
- Bring the rock shaft back to its starting position by turning the hand wheel.
- Trip 5 now must be engaged, the needle thread must be under full tension.
- Grease release cone 1 slightly.

13.06.14 Attaching and removing the thread trimming unit

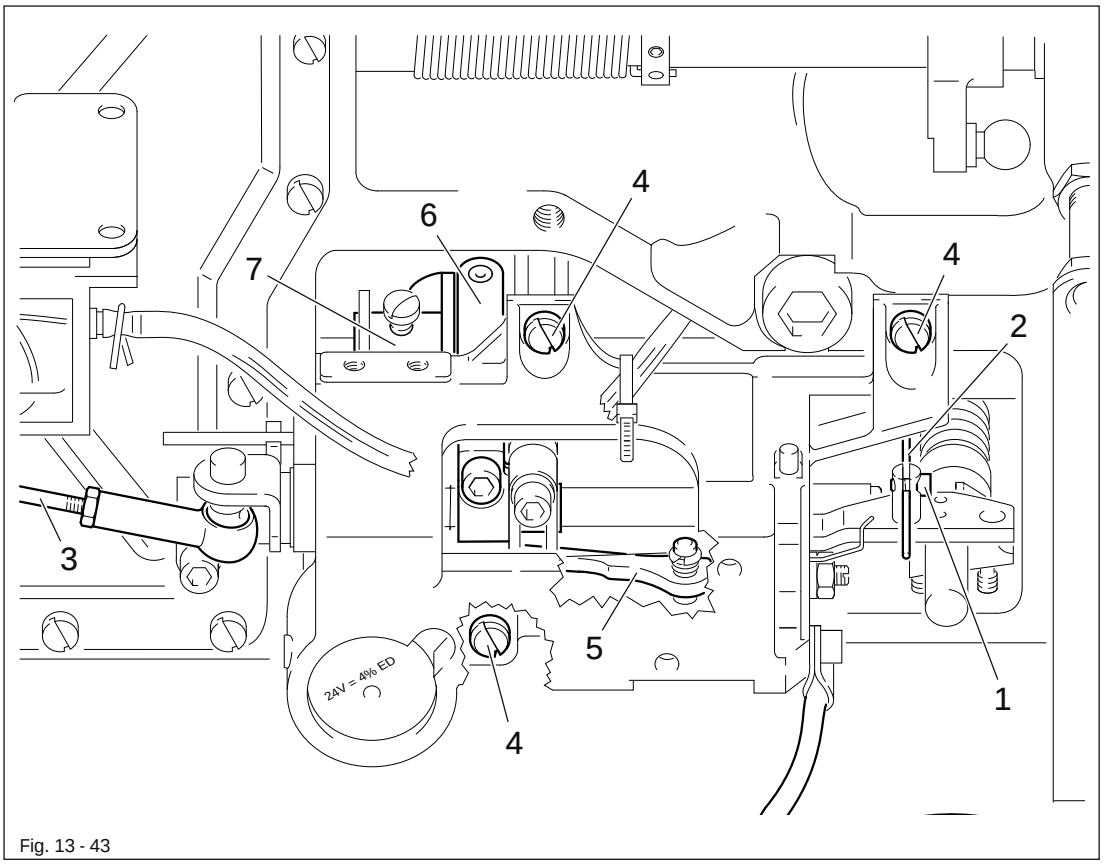

Fig. 13 - 43

- To remove the thread trimming unit, disconnect the plug from the control box.
- Loosen screw 1 and remove linkage 2 from its slot.
- Remove connecting rod 3.
- Unscrew screws 4 and remove the complete thread trimming unit.

- To attach the thread trimming unit, position the needle bar at b.d.c.
- Place the thread trimming unit in position and slightly turn screws 4.
- Activate engaging lever 5 manually, so that roller lever 6 engages with control cam 7.
- Adjust the thread trimming unit so that the roller of roller lever 6 is centred to the cam cut-out of control cam 7.
- Tighten screws 4 firmly.
- Replace connecting rod 3 and linkage 2 and tighten screws 1 firmly.
- Connect the plug of the thread trimming unit to the control box.
- Check performance manually.
- If the engaging lever 5 is not released, re-adjust the thread trimming unit.

13.07 Adjusting the edge trimming device on the PFAFF 3822-2/42

13.07.01 Knife stroke

Requirement
When the needle bar is at its t.d.c. (adjustment hole 5), the knife must be at the top of its stroke.

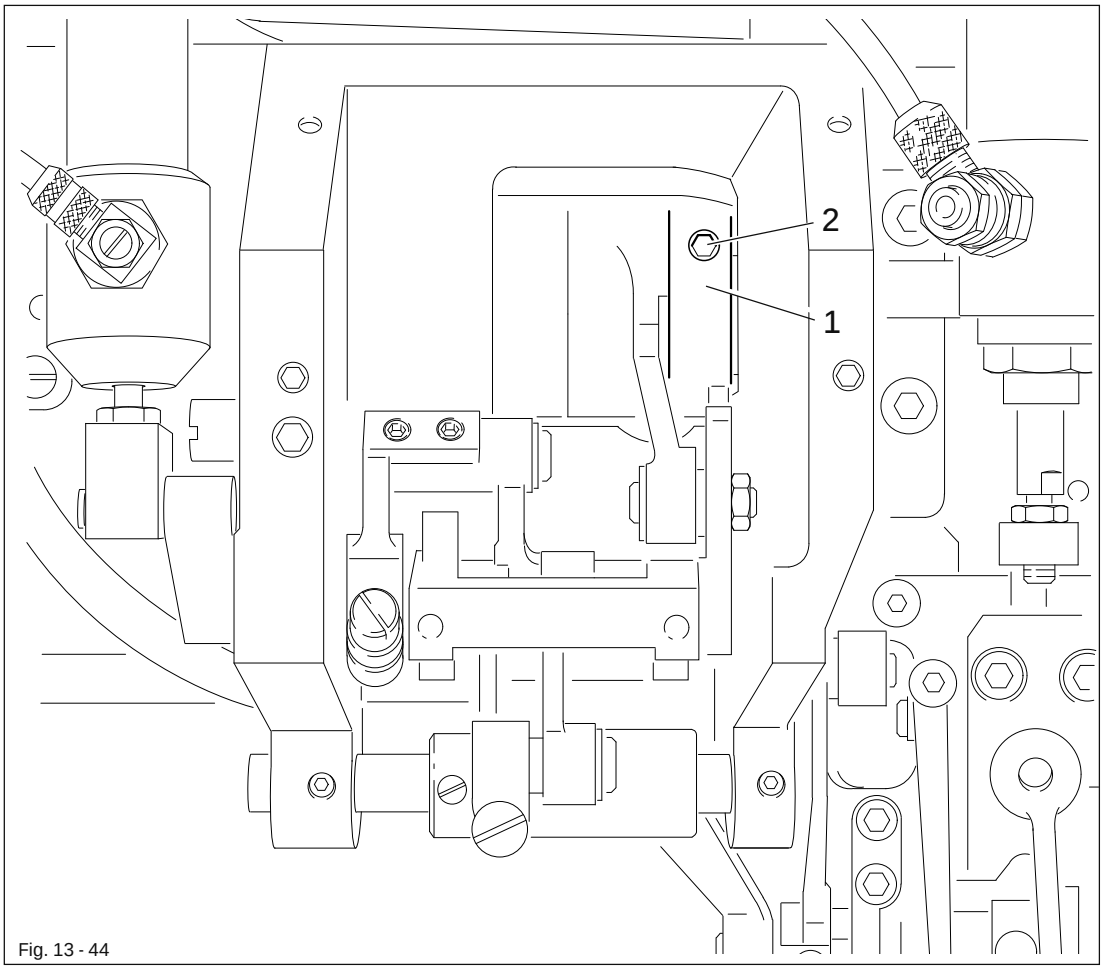

Fig. 13 - 44

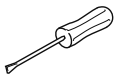

- Switch on the machine.
- Switch on the edge trimming device.
- Bring the needle bar to t.d.c.
- Adjust eccentric 1 (screw 2) according to the requirement.

13.07.02 Neutral position of the knife stroke

Requirement
When the edge trimming device is switched off, the top knife should not move when the balance wheel is turned.

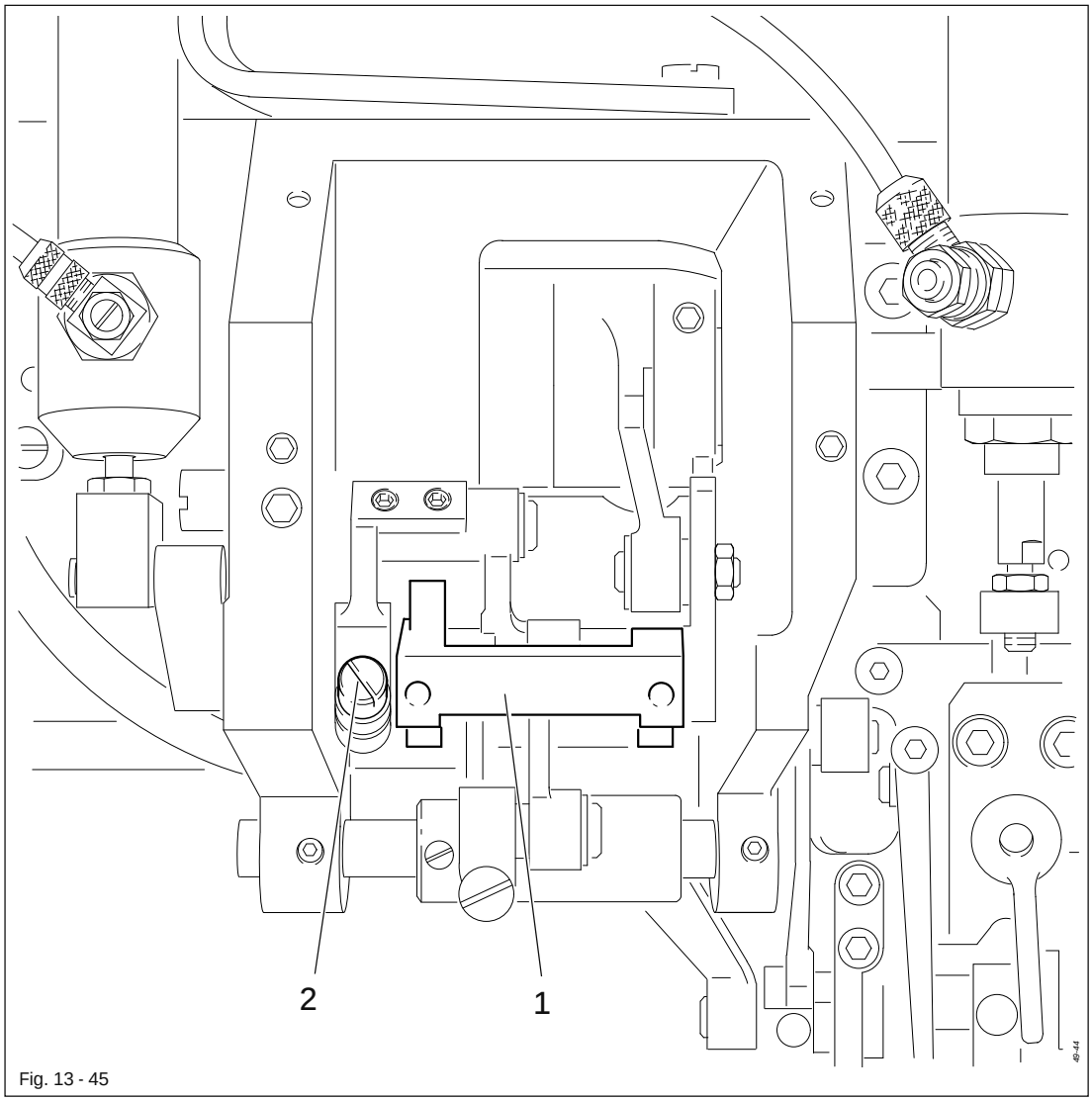

Fig. 13 - 45

- Turn crank 1 (screw 2) according to the requirement.

13.07.03 Knife height

Requirement
When the knife 1 is in its lowest position, the front edge of the knife blade should be approx. 0.5 mm below the top edge of the needle plate.

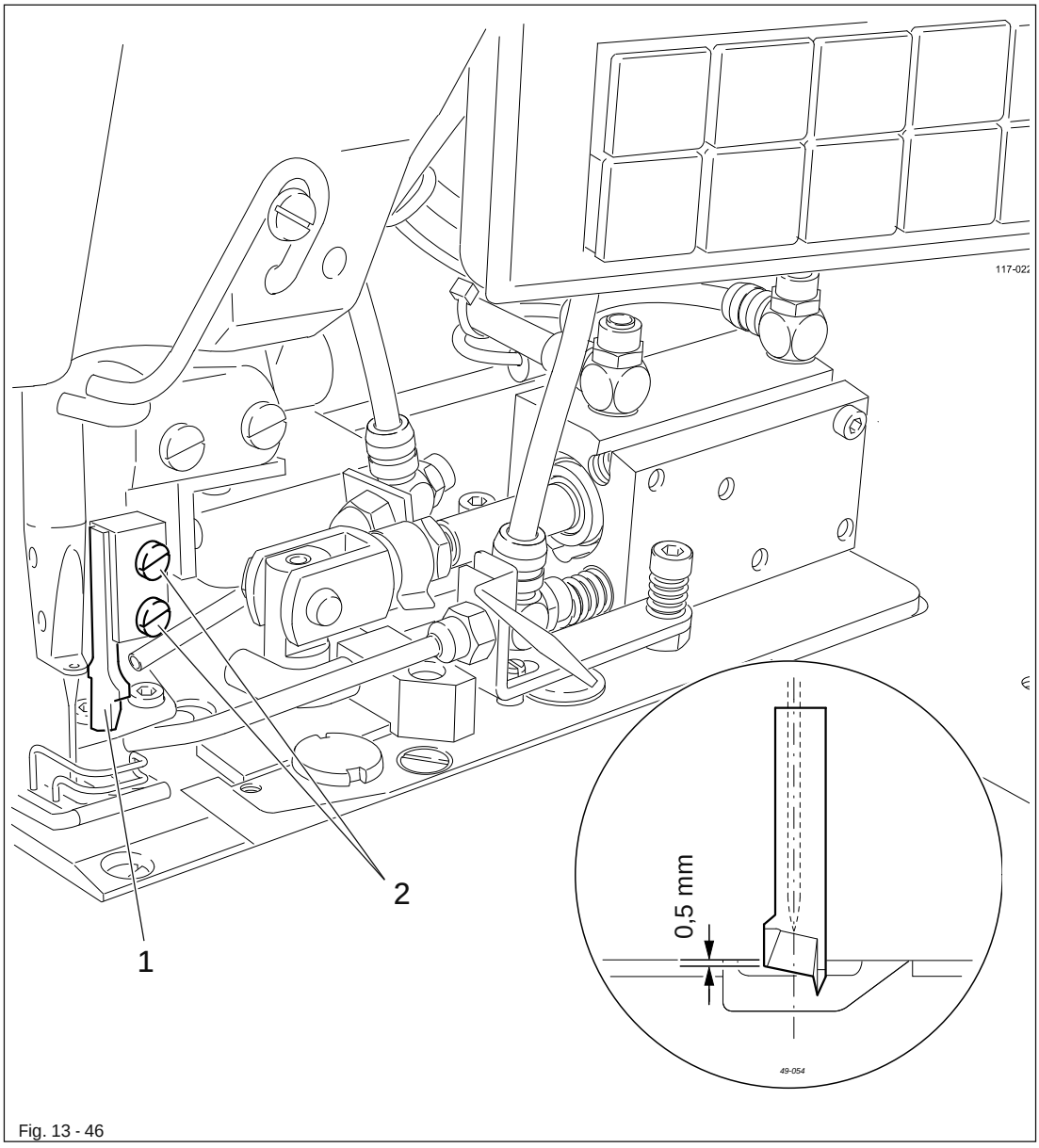

Fig. 13 - 46

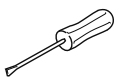

- Adjust knife 1 (screws 2) according to the requirement.

13.07.04 Aligning the knife

Requirement

1. The needle must be in the centre of the knife-edge.
2. The knife should be resting on the stationary knife with light pressure, without the knife spur striking the stationary knife.
3. The knife should stand slightly slanted to the stationary knife (shear effect).

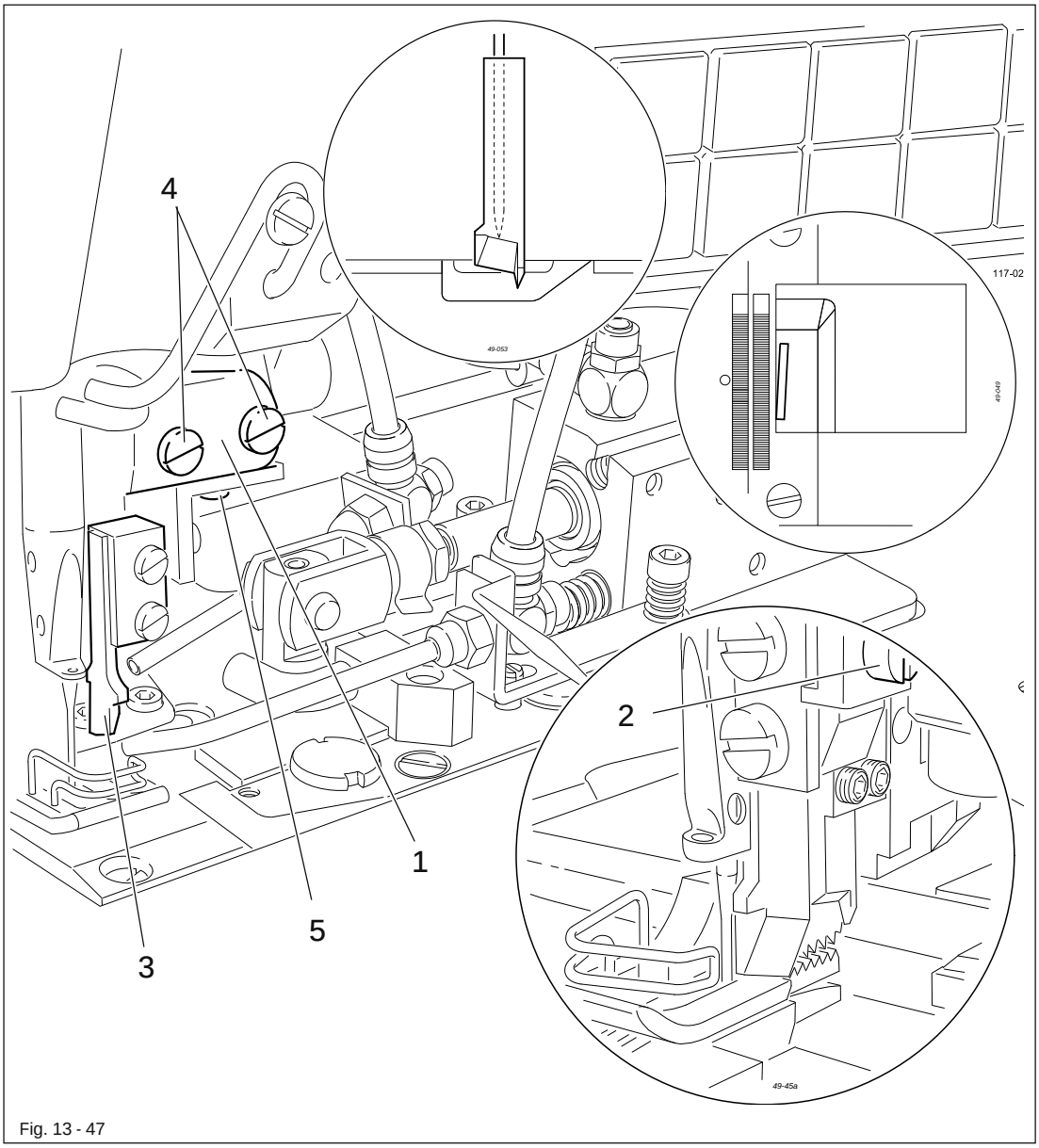

Fig. 13 - 47

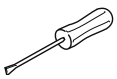

- Adjust knife mounting 1 (screw 2) according to requirement 1.
- Switch on the machine
- Switch on the edge trimming device.
- Bring knife 3 into its lowest position by turning the balance wheel.
- Adjust knife 3 (screw 4) according to requirement 2.
- Adjust knife mounting 1 (screw 5) according to requirement 3.

13.07.05 Adjusting the stop eccentric

Requirement
When stop 4 is touching eccentric 2, there should be a distance of approx. 5 mm between the front edge of the case and lever 5.

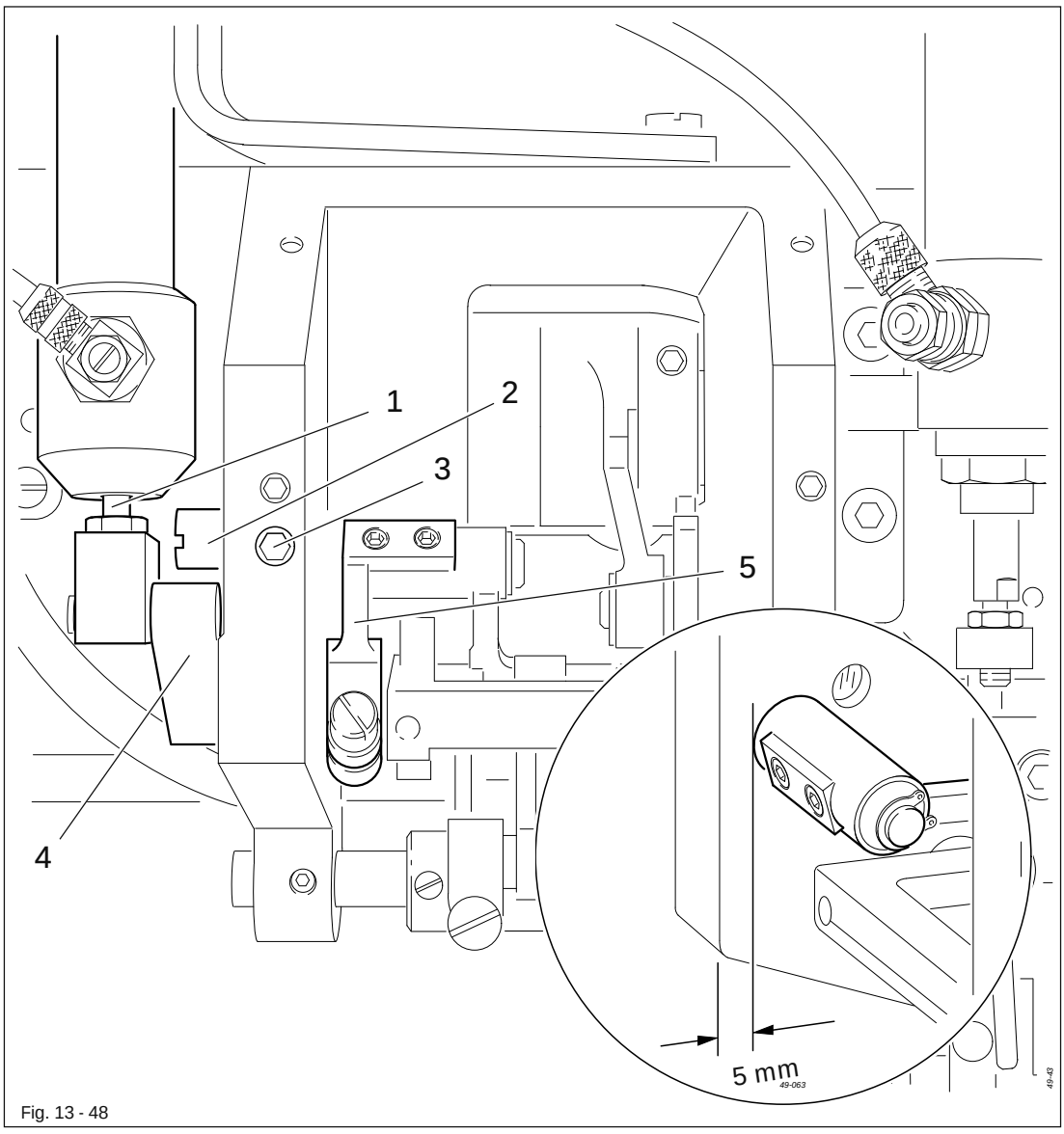

Fig. 13 - 48

- Pull down lifting rod 1 as far as possible.
- Adjust eccentric 2 (screw 3) according to the requirement.

13.08 Adjusting the feathered trimming device on the PFAFF 3822-2/44

13.08.01 Top stroke motion of the knife

Requirement
The downward motion of the knife must begin, when the descending needle eye is level with the needle plate.

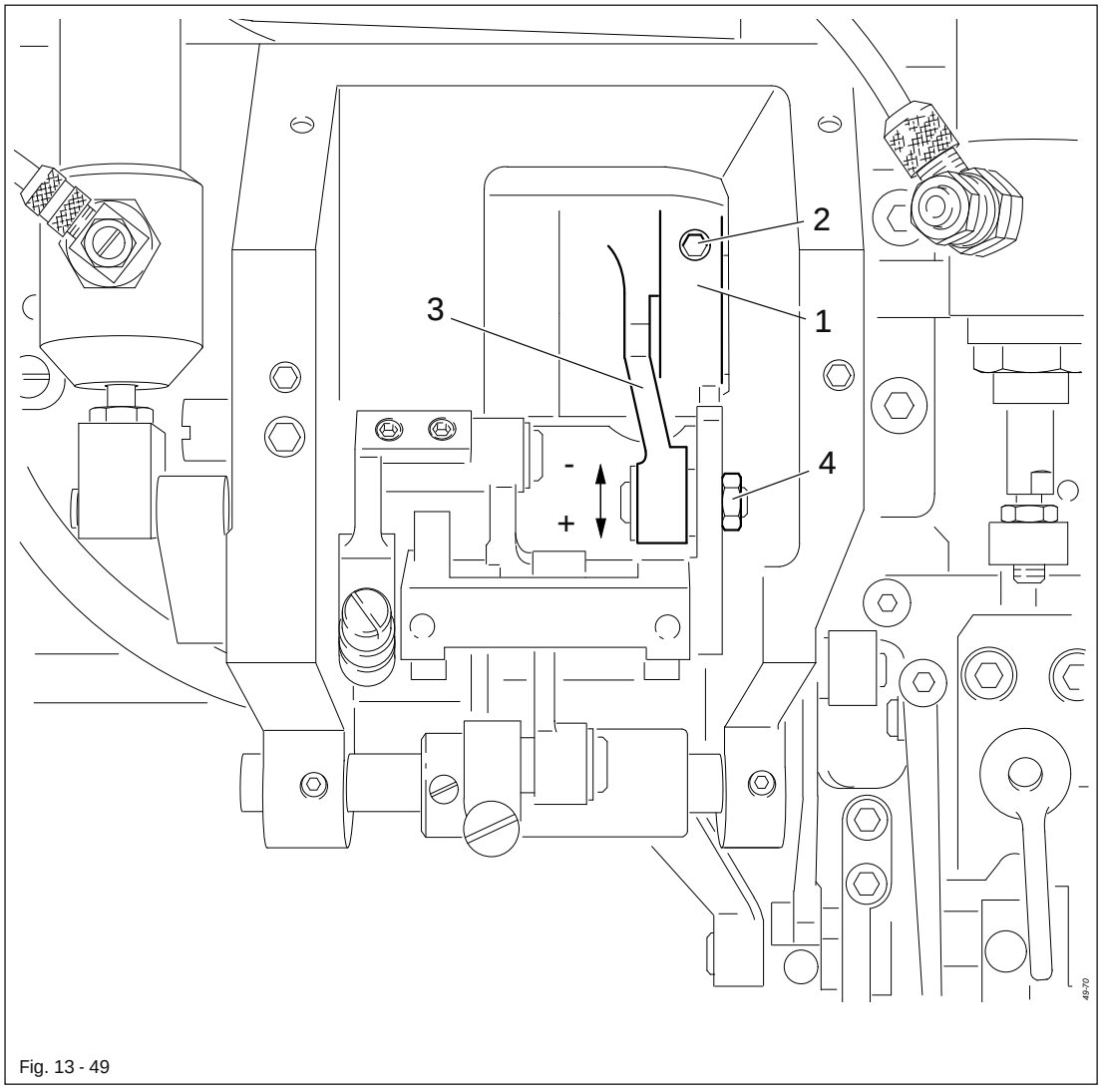

Fig. 13 - 49

- Switch on the machine.
- Set the maximum knife stroke
- Switch on the feathered trimming device.
- Adjust eccentric 1 (screws 2) according to the requirement.

The knife stroke can be altered by adjusting lever 3 (nut 4).

13.08.02 Cutting angle of the front knife

Requirement
The knife 5 should
1. Touch the stationary knife without pressure and
2. Be at a 0.1 mm slant to the stationary knife.

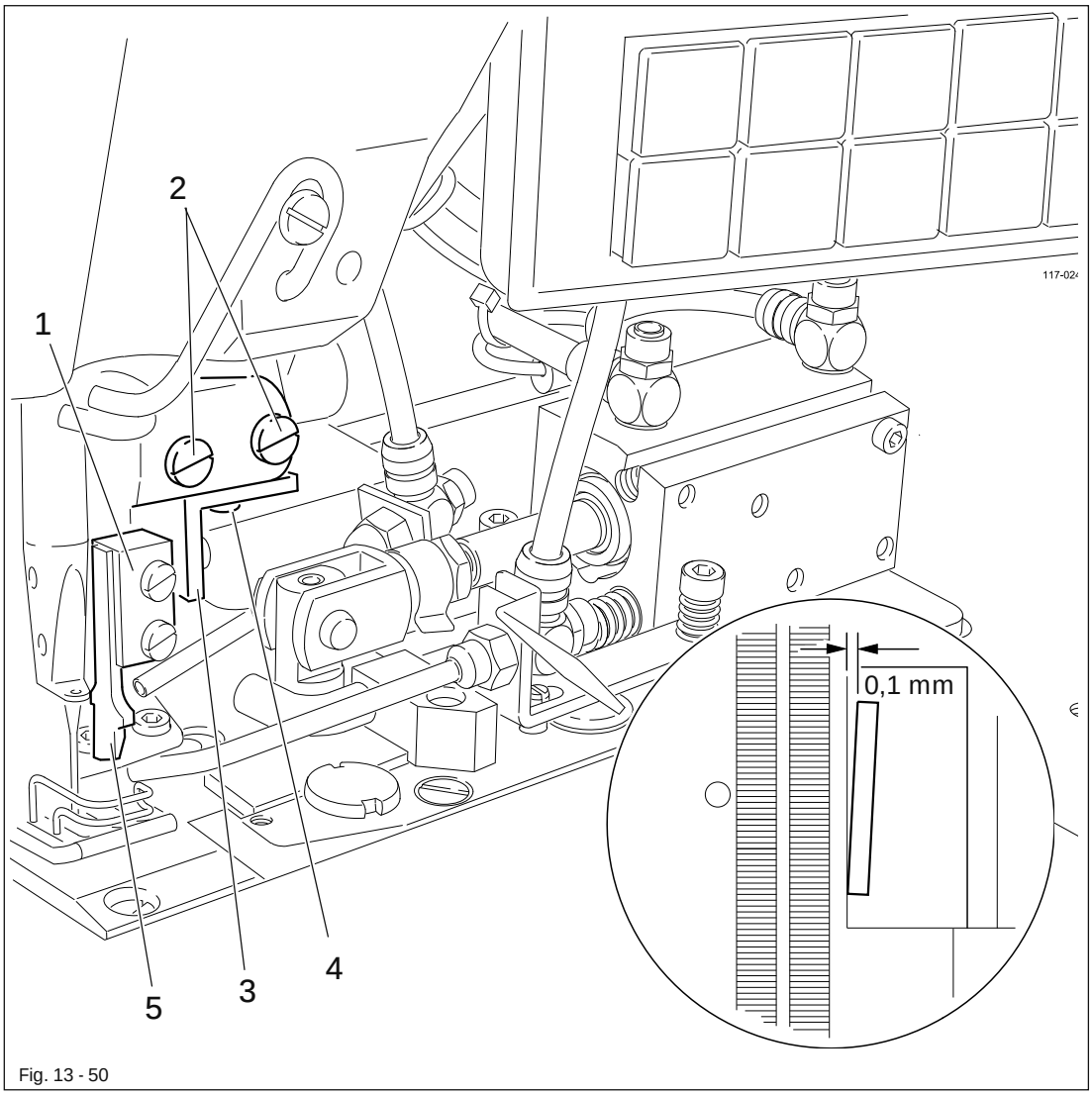

Fig. 13 - 50

- Adjust knife mounting 1 (screws 2) according to requirement 1.
- Adjust angle bracket 3 (screw 4) according to requirement 2.

13.08.03 Cutting position of the front knife

Requirement
The rear edge of knife 3 must be positioned 0.8 mm in front of the needle plate cutout.

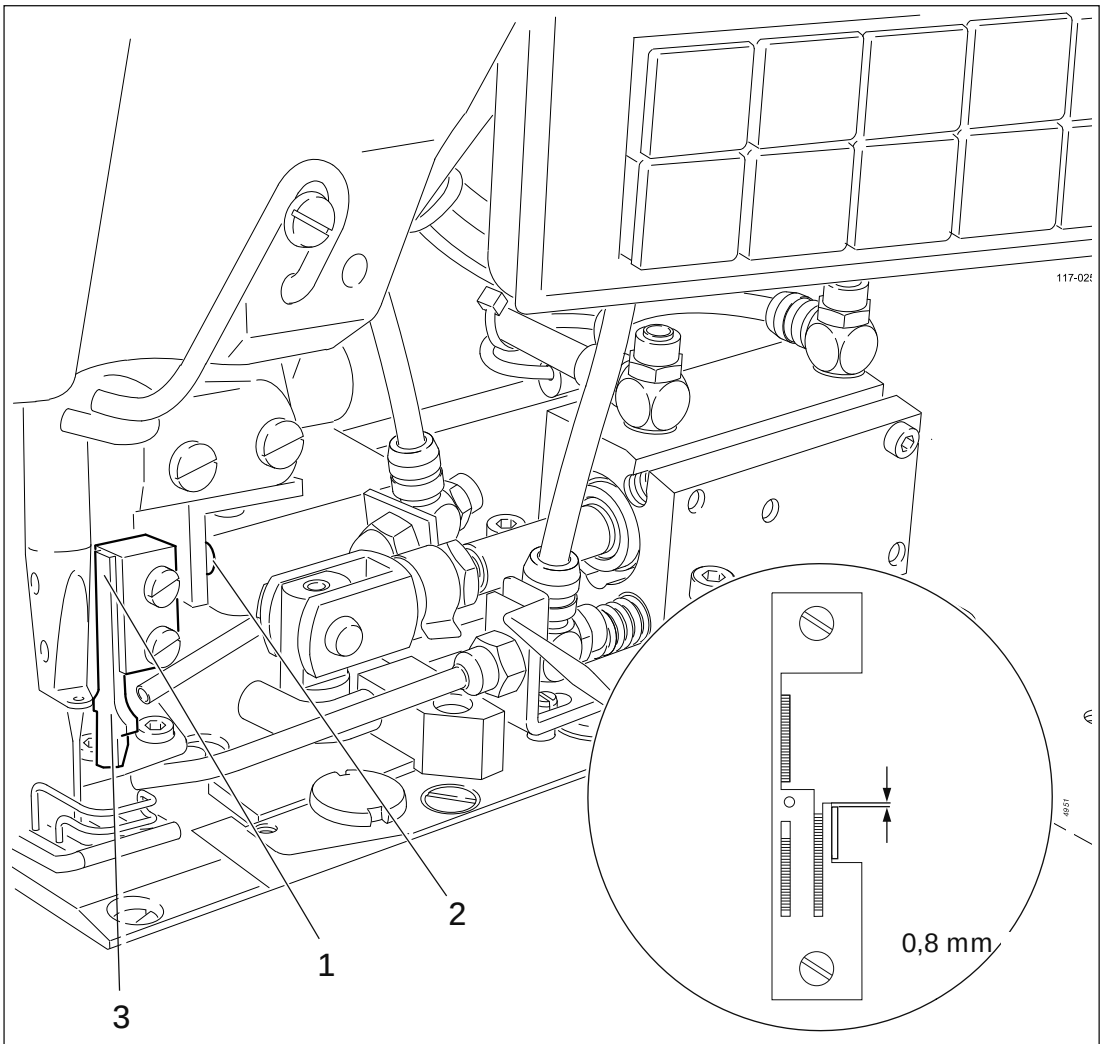

Fig. 13 - 51

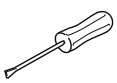

- Adjust knife mounting 1 (screw 2) according to the requirement.

13.08.04 Cutting pressure of the front knife

Requirement

1. Only as much cutting pressure as absolutely necessary should be applied.
2. After the cutting pressure has been set, the slant of the knife must not be less than 0.05 mm.

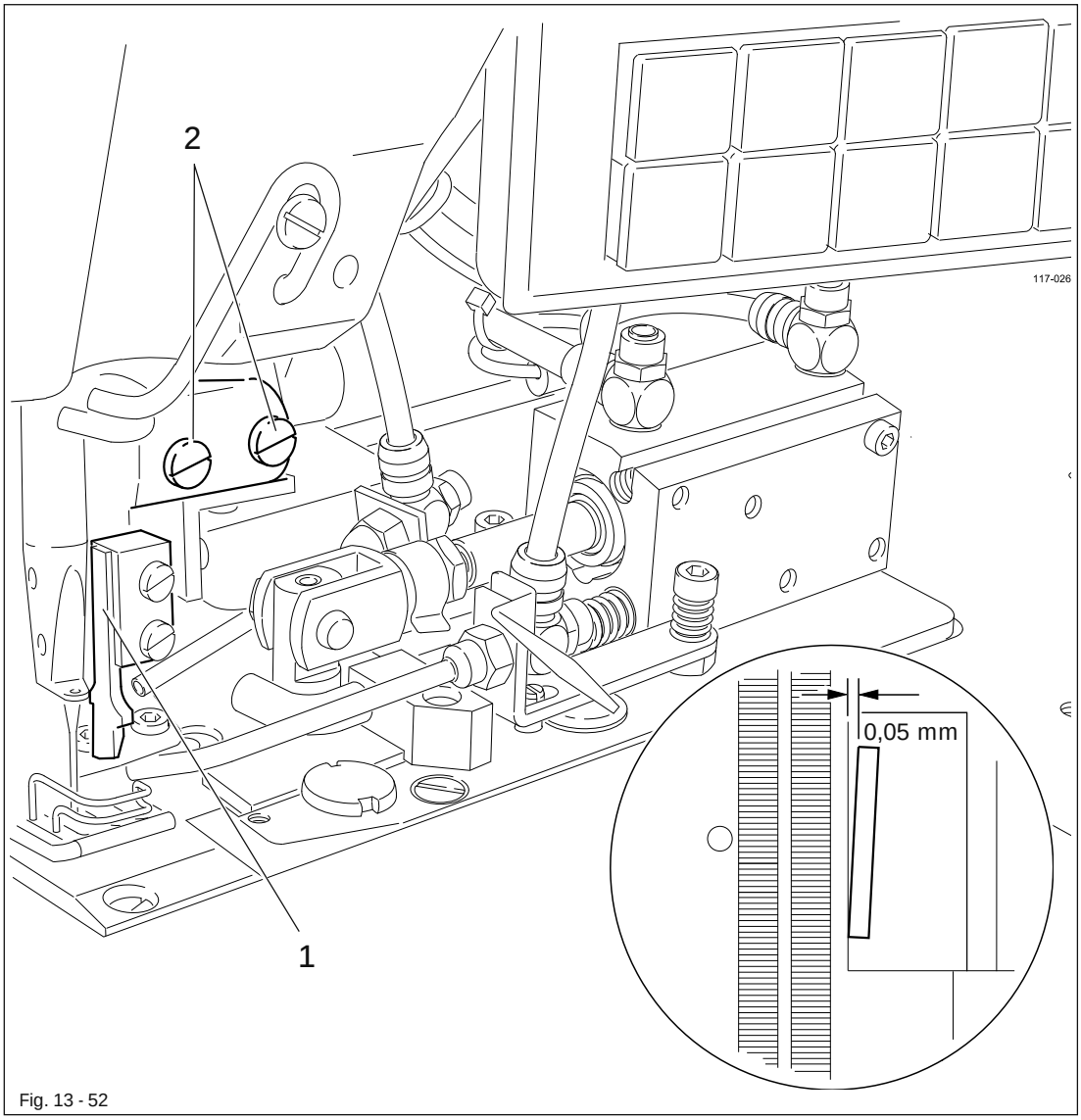

Fig. 13 - 52

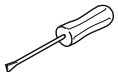

- Adjust knife mounting 1 (screws 2) according to the requirements.

13.08.05 Knife stroke zero point

Requirement
When the feathered trimming device is switched off, the top knives should not move when the balance wheel is turned.

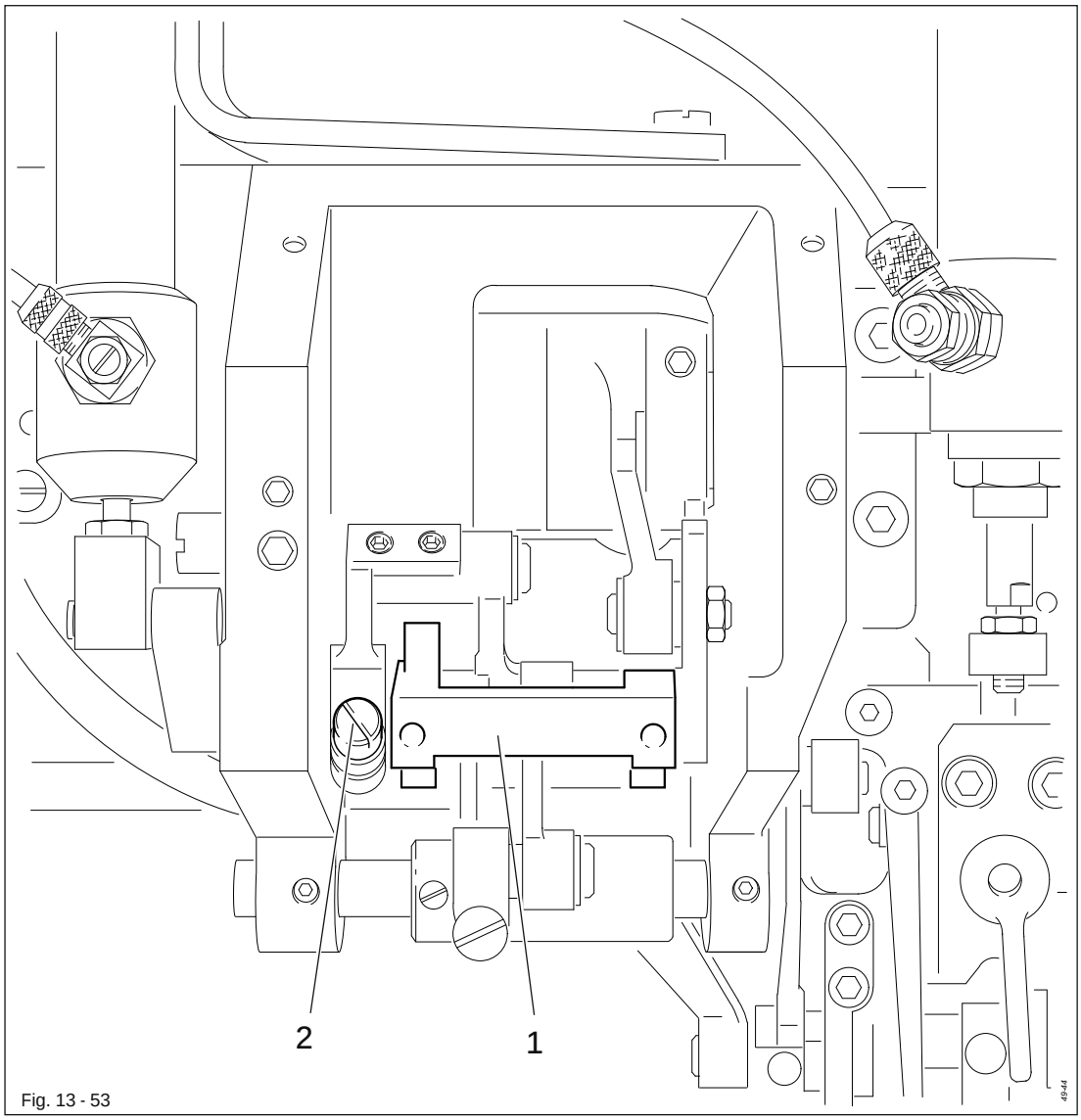

Fig. 13 - 53

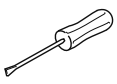

- Adjust crank 1 (screw 2) according to the requirement.

13.08.06 Side position of the back knife in relation to the hook knife

Requirement
The back edge of the back knife 1 should be even with hook knife 3.

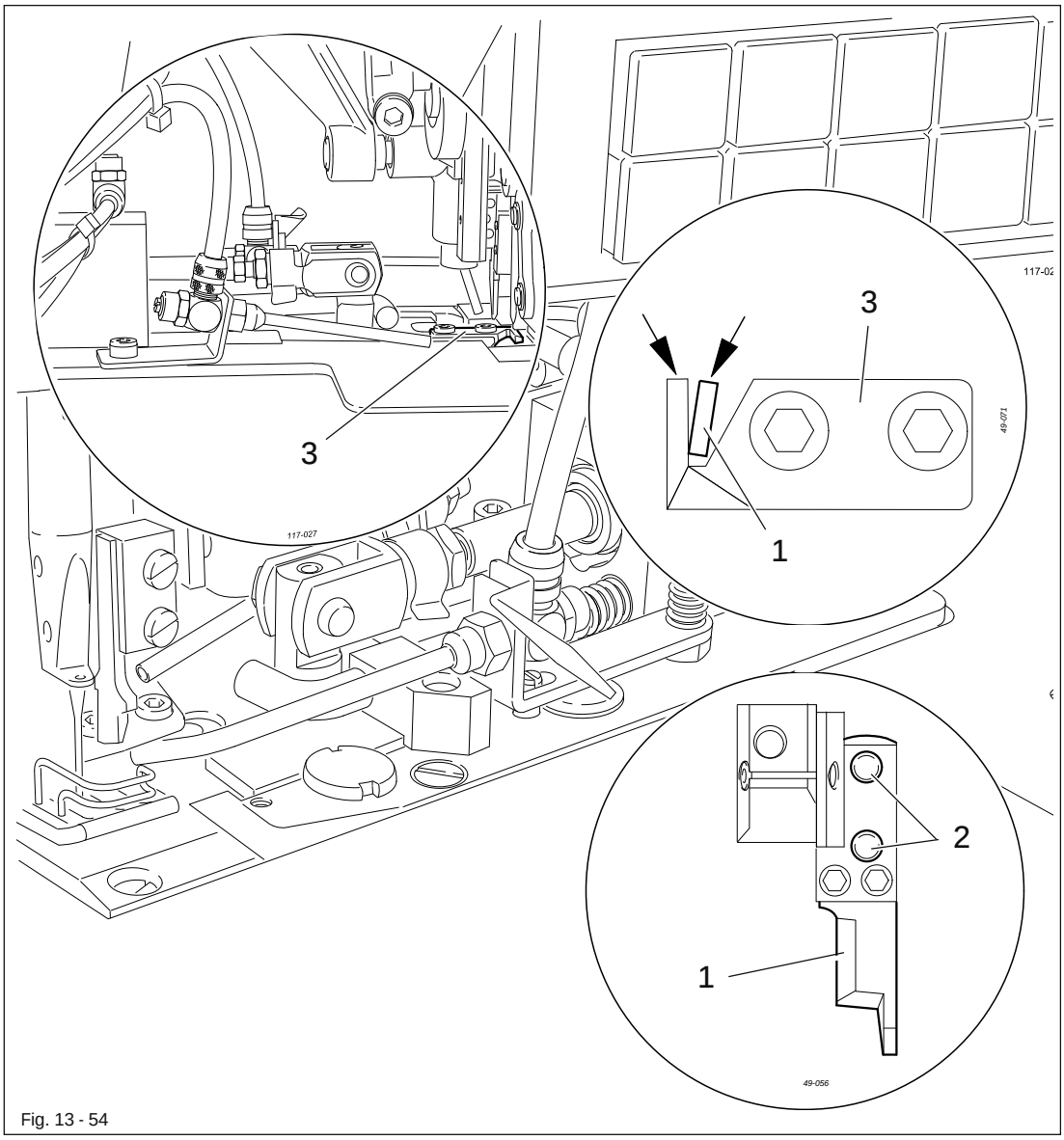

Fig. 13 - 54

- Adjust knife 1 (screws 2) according to the requirement.

13.08.07 Cutting angle of the back knife in relation to the hook knife

Requirement
The hook knife 1 should be at a 0.05 – 0.1 mm slant to the back knife 2.

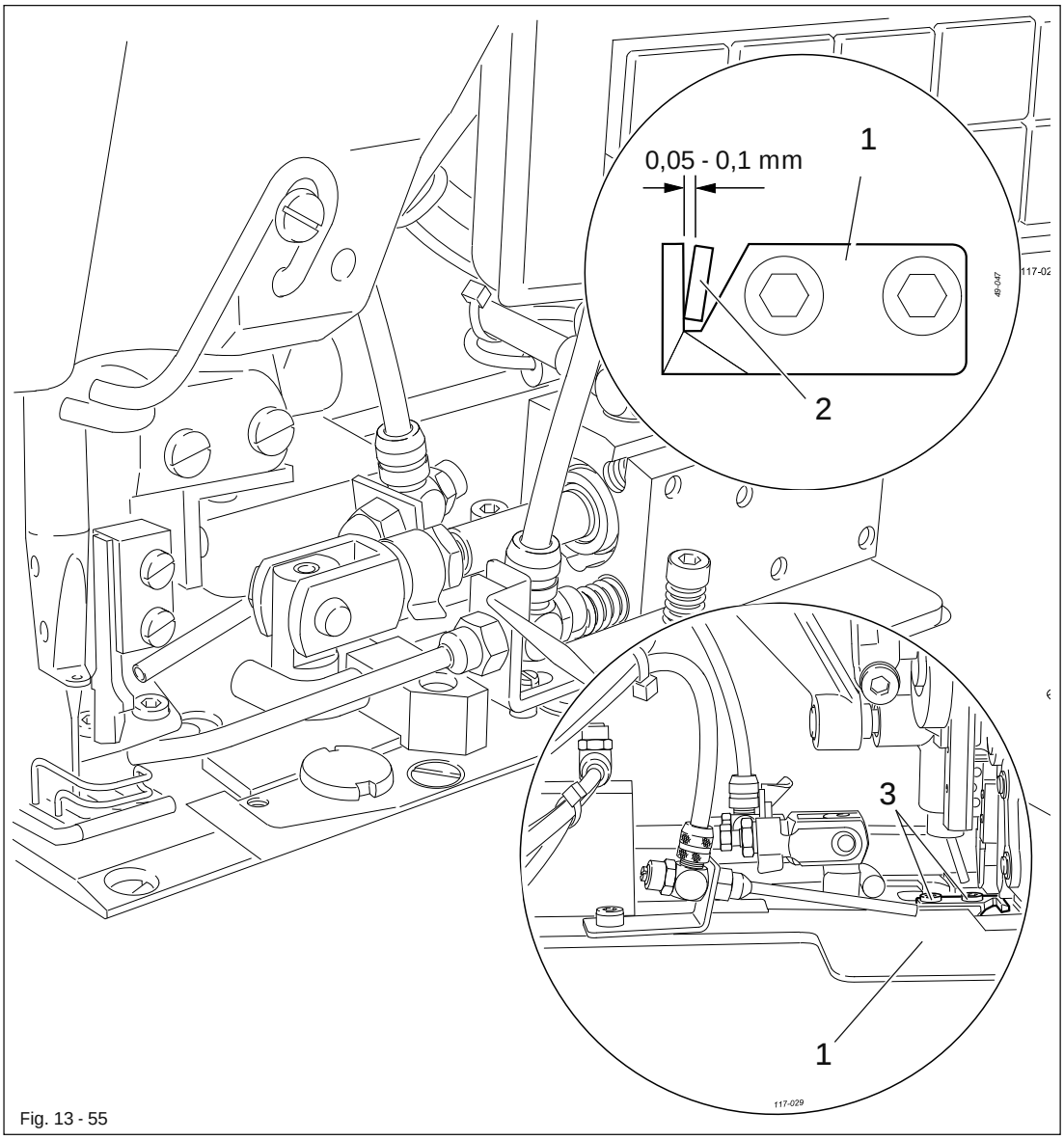

Fig. 13 - 55

- Switch the machine on and let it move into position.
- Switch on the edge trimming and feathered trimming device.
- Slide hook knife 1 into cutting position by hand.
- By turning the balance wheel, bring back knife 2 into cutting position.
- Adjust hook knife 1 (screws 3) according to the requirement.

13.08.08 Cutting pressure between the back knife and the hook knife

Requirement

1. Only as much cutting pressure as absolutely necessary should be applied.
2. After the cutting pressure has been set, the slant of the back knife must not be less than 0.05 mm.

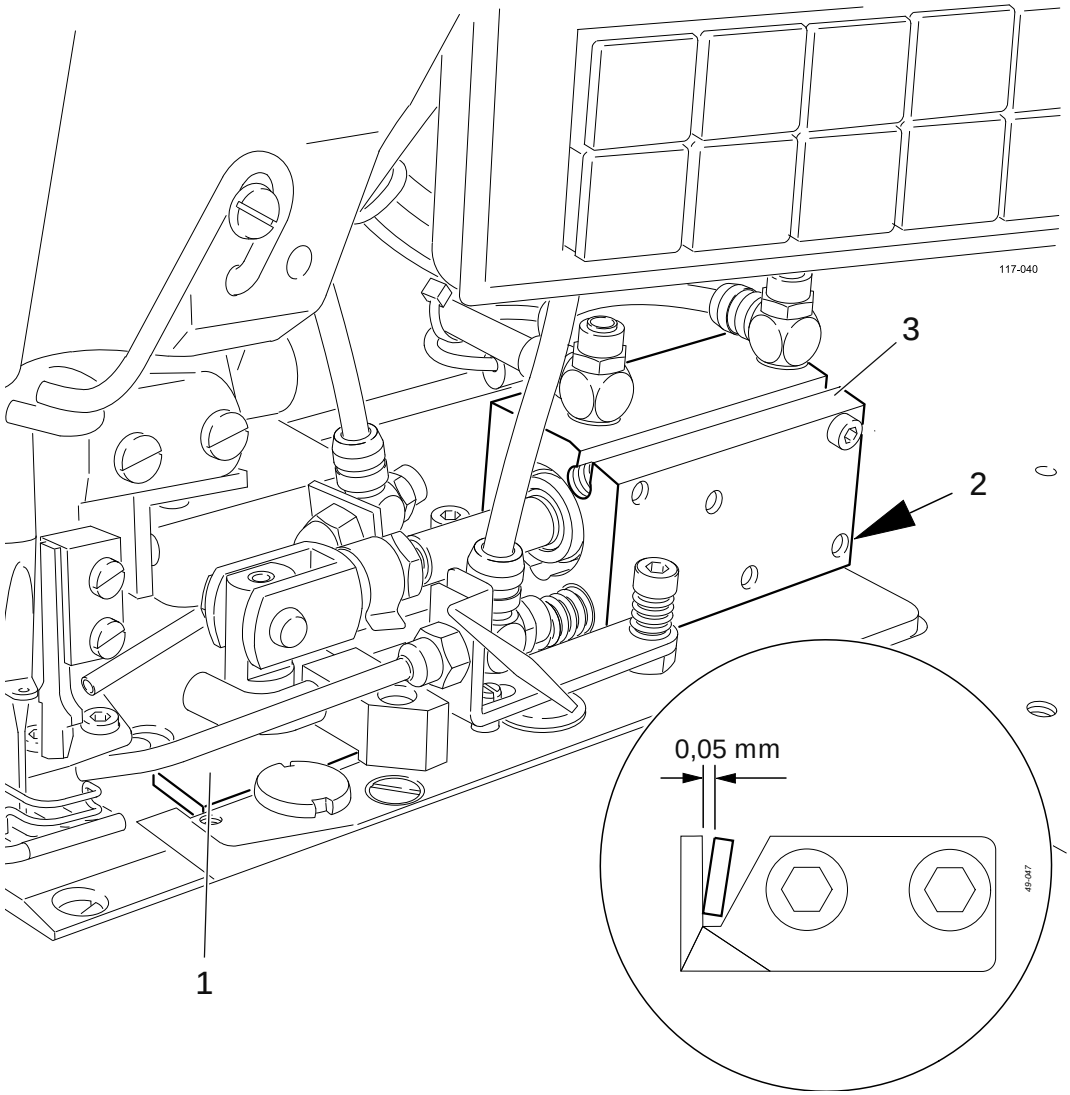

Fig. 13 - 56

If the cutting pressure is too high, there is a risk of the hook knife breaking!

- Adjust angle bracket 1 (screw 2) according to the requirements.

Make sure that cylinder 3 moves as far as it can go.
No material scraps should accumulate near angle bracket 1.

13.08.09 Cutting depth of the back knife

Requirement
In its lowest position the back knife should move approx. 0.5 mm into the hook knife.

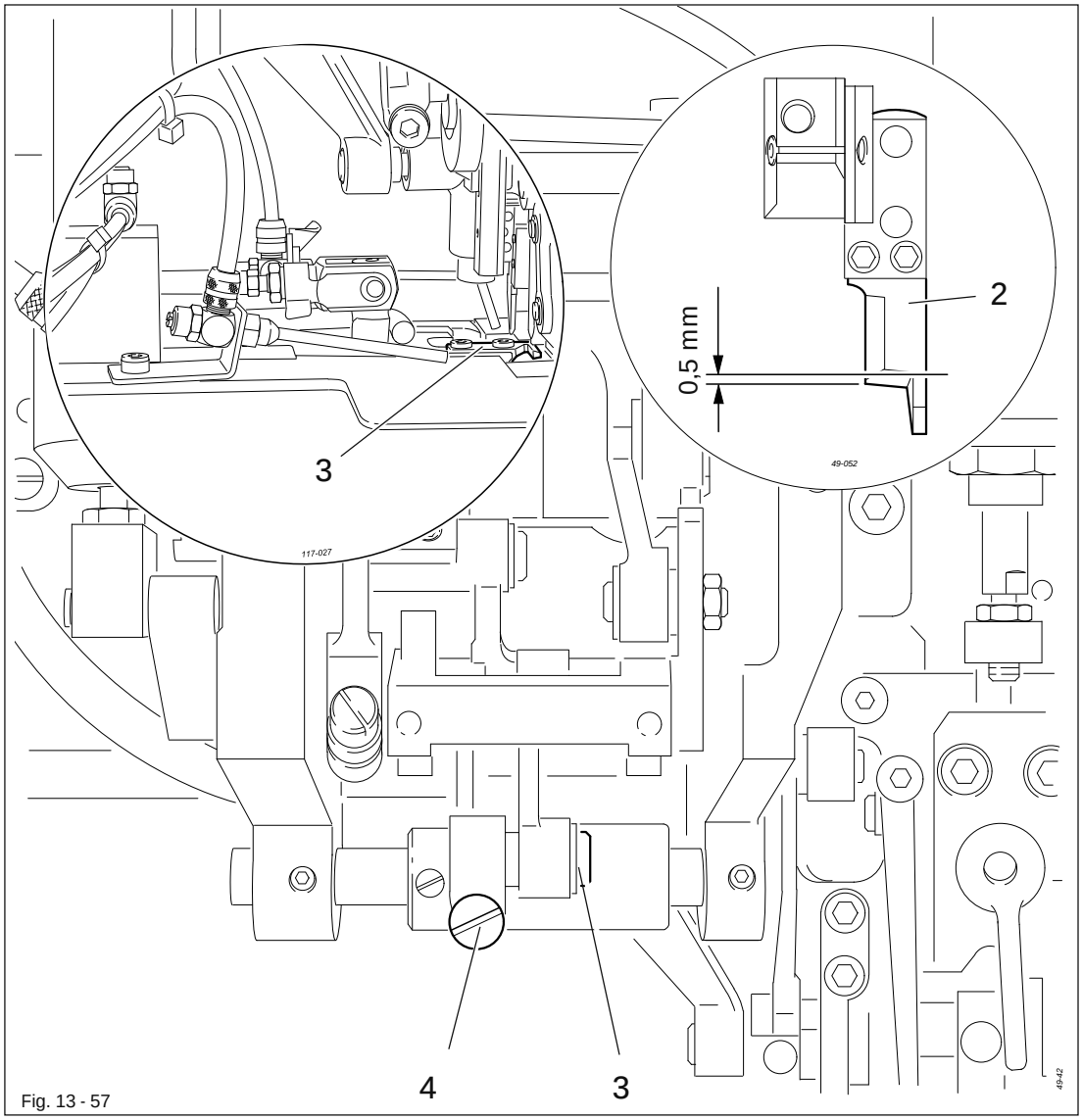

Fig. 13 - 57

- Switch the machine on and let it move into position.
- Switch on the edge trimming and feathered trimming device (keyboard).
- Bring hook knife 1 into cutting position (keyboard).
- By turning the balance wheel, bring back knife 2 into cutting position.
- Adjust eccentric 3 (screw 4) according to the requirement.
- Check the height of the front knife and adjust it if necessary, see Chapter 13.07.03 Knife height.

13.08.10 Cutting depth of the front knife

Requirement
When the back knife 3 begins cutting, the front knife 1 should already have completed 2/3 of its cut.

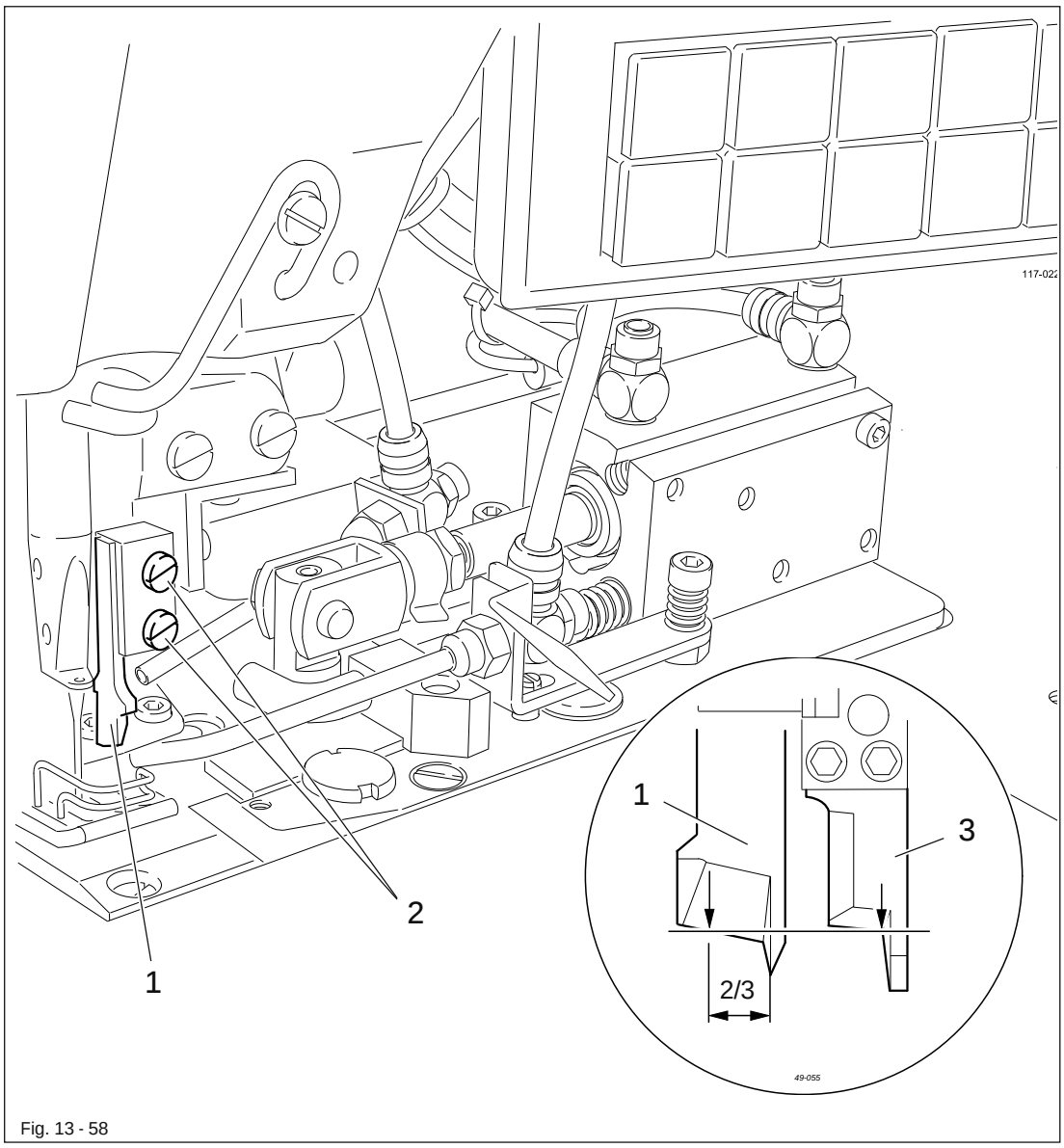

Fig. 13 - 58

- Switch on the machine.
- Switch on the edge trimming device (keyboard).
- Bring the hook knife into cutting position (knee switch).
- Adjust front knife 1 (screws 2) according to the requirement.

13.08.11 Trimming margin

Requirement
The trimming margin should be 3.5 mm.

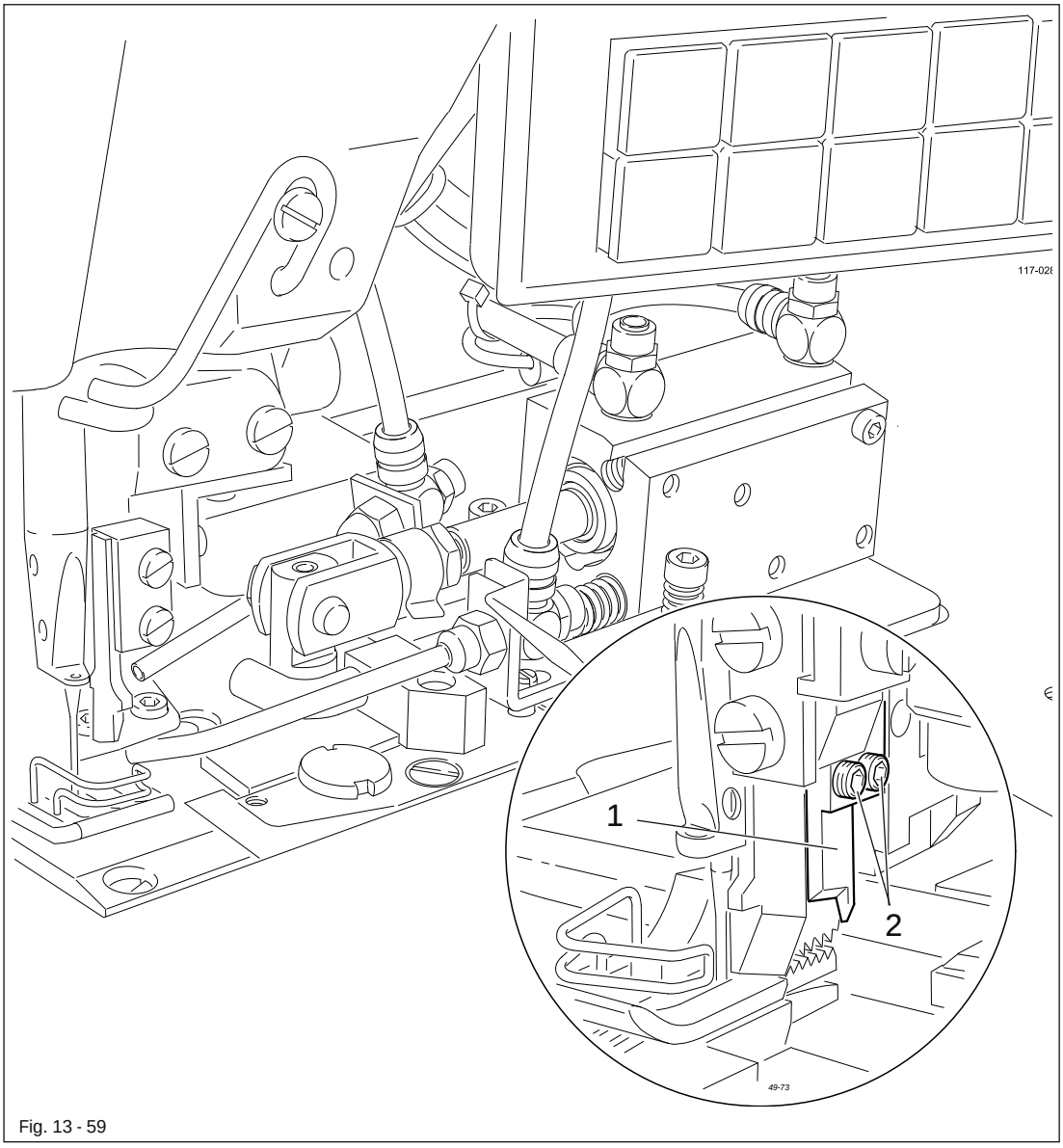

Fig. 13 - 59

- Adjust knife 1 (screws 2) according to the requirement.
- Sew a test seam and check the trimming margin, if necessary repeat the adjustment.

Pay attention to the cutting pressure of the hook knife!

13.08.12 Sensor control of the hook knife

Requirement
When sewing with the feathered edge trimming device, the sewing and trimming operation must not begin until the hook knife is in cutting position.

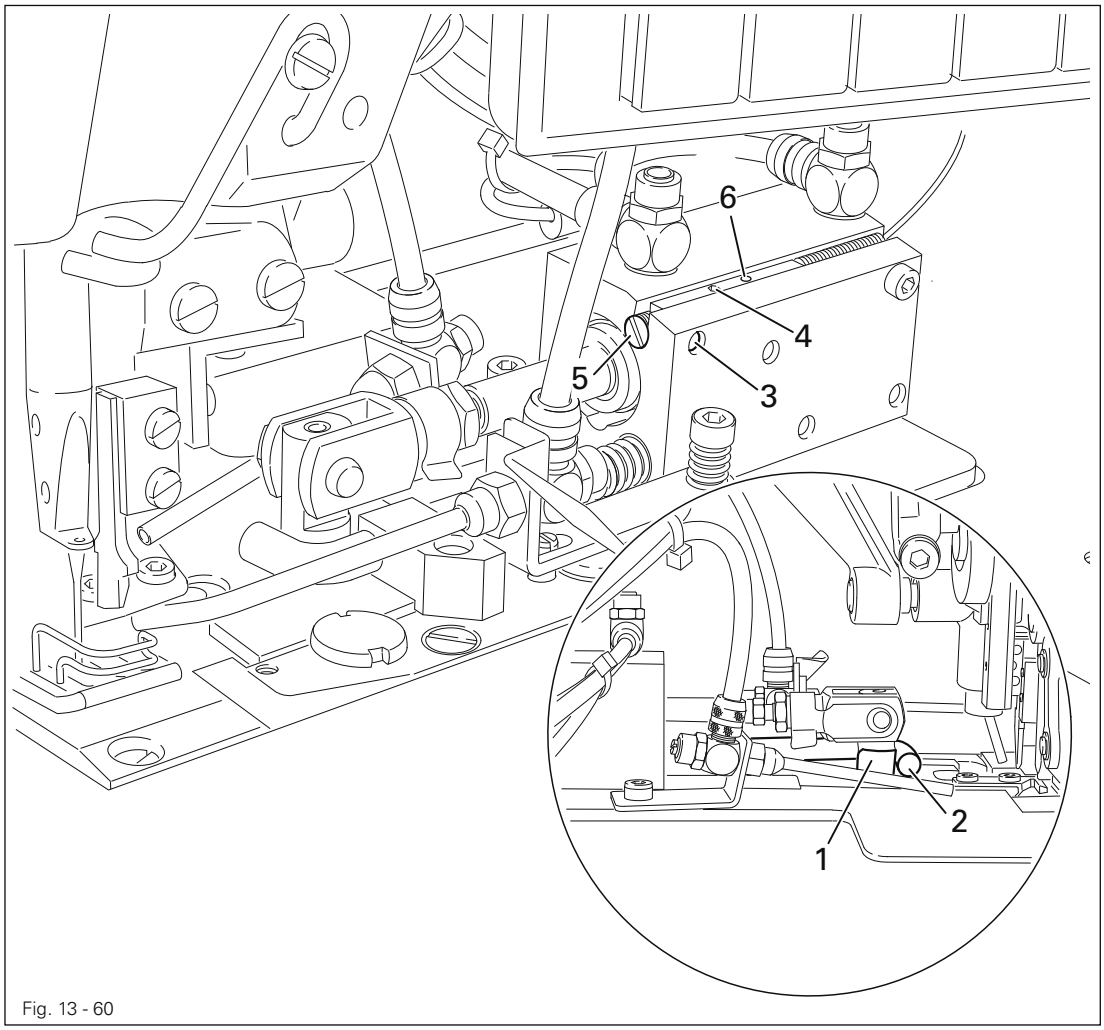

Fig. 13 - 60

- Switch the machine on and let it move into position.
- Hold the sensor gauge (0.1 mm) between stop plate 1 and pin 2.
- Bring hook knife into cutting position (keyboard).
- Slightly loosen screws 3 and 4.
- With screw 5 move the sensor towards the hook knife, until LED 6 lights up.
- Turn screw 5 in the opposite direction, until the light of LED 6 begins to dim and tighten screw 3 and 4.

- Checking the setting
- Position the machine at b.d.c. and switch on the feathered-cutting unit.
- Insert the feeler gauge (0.1 mm) between the stop plate 1 and pin 2.
- Switch on the hook knife.
- If the machine is set correctly, "ERROR E010" is displayed.

13.08.13 Air-blast tube for separating the material plies

Requirement
The material plies should be blown far enough apart to enable the hook knife to move between both material plies without difficulty.

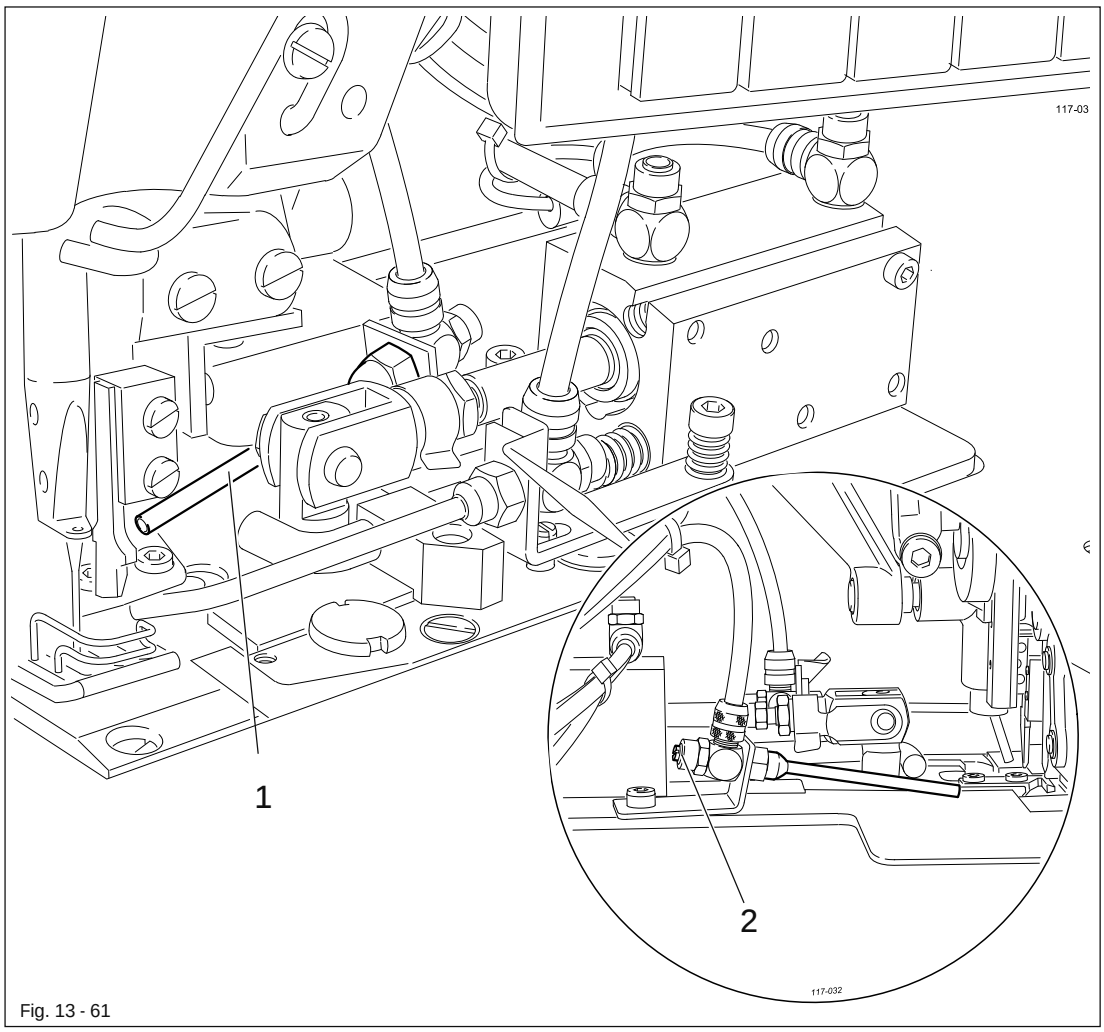

Fig. 13 - 61

- Align air-blast tube 1 according to the requirement.
- Adjust air pressure (throttle valve 2) according to the requirement.

13.08.14 Air-blast tube for cutting waste

Requirement
The cutting waste should be guided into the waste channel as well as possible.

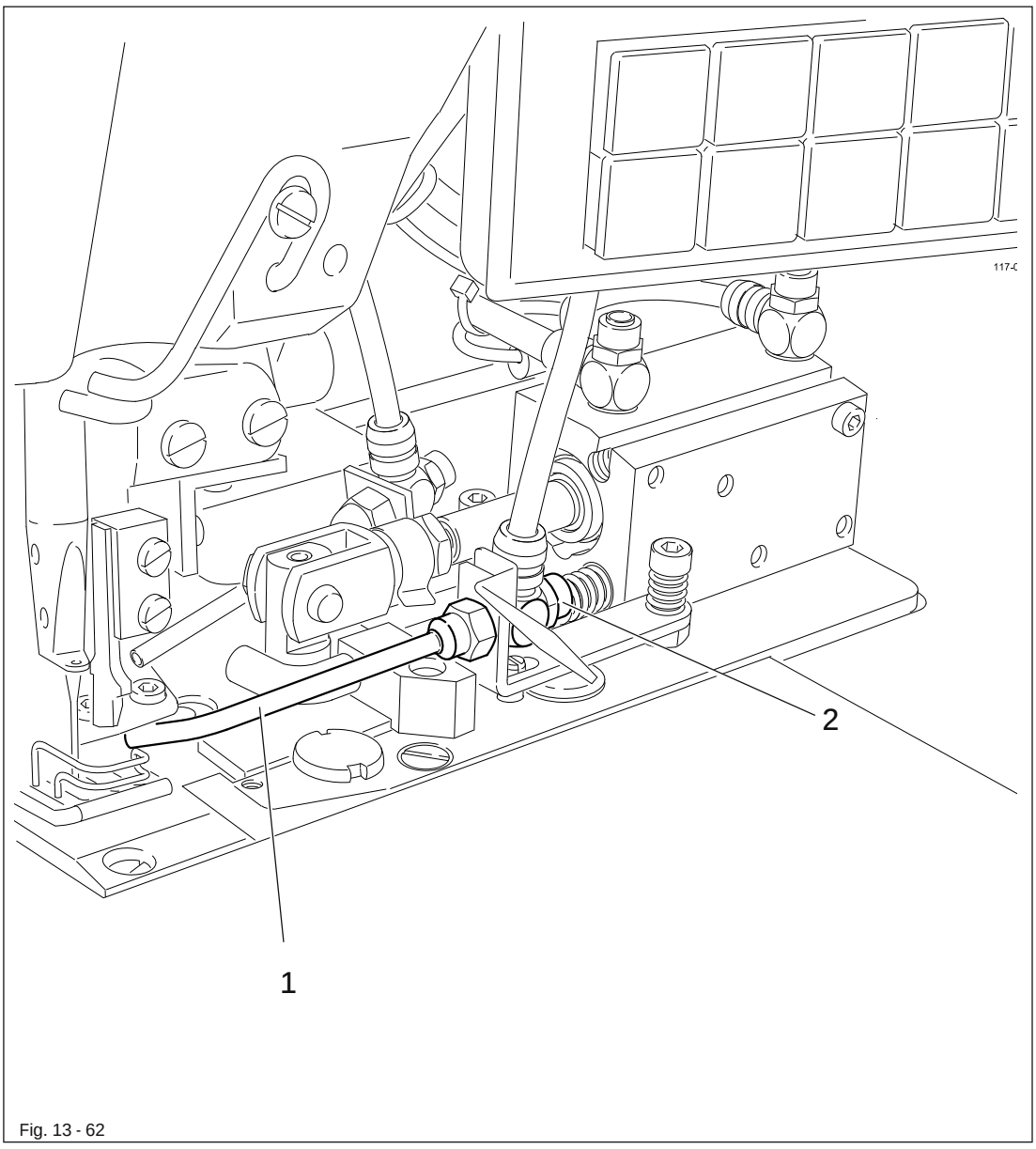

Fig. 13 - 62

- Align air-blast tube 1 according to the requirement.
- Adjust air pressure (throttle valve 2) according to the requirement.

13.09 Parameter settings

13.09.01 Overview of the parameter functions

After the machine has been switched on, by pressing the appropriate function the input mode is called up, in which the individual parameters can be called up directly. With a code it is possible to protect all or individual parameter groups against unauthorised access.

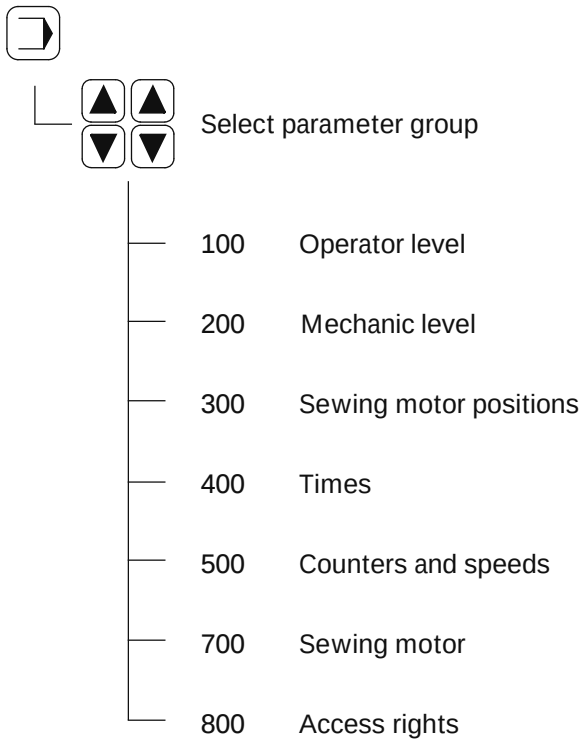

13.07.02 Example of a parameter input

- Switch on the machine.



- Call up the input mode.

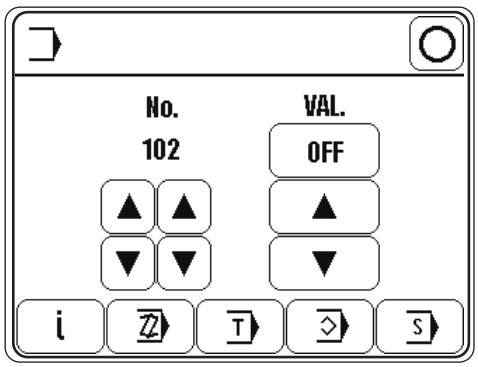



- e.g. call up parameter "113" (switch beep tone for section change on/off)

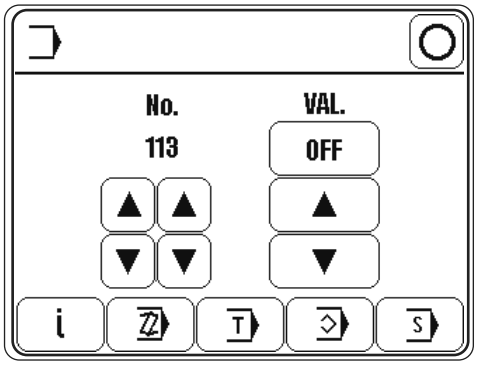

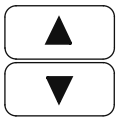

- e.g. switch beep tone on (value "ON").



- Conclude the input.

13.09.03 List of parameters



The operator has free access to the "100" parameters. Parameters "200" - "800" can only be changed after entering a code number and may only be changed by authorised personnel.

Group	Parameter	Description	Setting range	Set value
1	102	Reversing	OFF - ON	OFF
	113	Beep tone for section change	OFF - ON	OFF
	114	Max. speed forwards at each pedal position	OFF - ON	OFF
2	201	Machine configuration 6 = 3822-2/42 7 = 3822-2/44	3 - 7	-
	209	Fullness adjustment value (keyboard)	0 - 9	0
	210	Switch off edge knife (with pedal position "-2")	OFF - ON	OFF
	212	not speed variation with change of fullness	OFF - ON	OFF
	213	program interruption with pedal-position -2	OFF - ON	OFF
3	301	Position "Needle point at top edge needle plate"	0 - 127	0
	302	Position "take-up lever t.d.c."	0 - 127	113
	303	Position "needle lowered" on the 3822-2/42 on the 3822-2/44	0 - 127	 60 10
	304	Reversing position	0 - 127	113
	305	Placement stitch position	0 – 127	7
4	401	Delay time "lift foot" (s)	0,01 – 1,50	0,02
	402	Start delay after "lower foot" (s)	0,01 – 1,50	0,15
	404	Time for cleaning thread monitor (s)	0,01 - 1,50	0,25
5	501	Maximum speed	100 – 3500	3200
	504	Speed soft start	100 – 3500	1500
	505	Soft start stitches	0 – 15	0
7	701	P-quota speed controller	1 – 50	30

Group	Parameter	Description	Setting range	Set value
7	702	I-quota speed controller	0 – 100	50
	703	P-quota position controller	1 – 50	20
	704	D-quota position controller	1 – 100	30
	705	Time for position controller	0 – 100	25
	706	P-quota position controller for rest brake	1 – 50	25
	707	D-quota position controller for rest brake	1 – 50	15
	708	Maximum moment for rest brake	0 – 100	0
	709	Minimum machine speed	3 – 64	6
	710	Maximum machine speed	1 – 35	32
	711	Maximum motor speed	1 – 35	32
	712	Positioning speed	3 – 25	18
	713	Acceleration ramp	1 – 50	35
	714	Brake ramp	1 – 50	30
	715	Reference position	0 – 127	20
	716	Time-out	0 – 255	40
	717	Starting current motor	3 – 10	8
	718	Anti-vibration filter	1 – 10	6
	719	Rotation direction allocation	0 – 1	0
	720	Reference position correction	0 – 127	64
8	801	Right of access function group 100	0 - 1	0
	802	Right of access function group 200	0 - 1	1
	803	Right of access function group 300	0 - 1	1
	804	Right of access function group 400	0 - 1	1
	805	Right of access function group 500	0 - 1	1
	806	Right of access service	0 - 1	1
	807	Right of access function group 700	0 - 1	1
	808	Right of access function group 800	0 - 1	1

Group	Parameter	Description	Setting range	Set value
8	809	Right of access program creation	0 - 1	1
	810	Enter access code	0 - 9999	3800

13.10 Sewing motor errors

Error message	Description
34	Brake path too short
35	Communication error with limit control
36	Switch on sequence not ready
65	Extint low with Init
66	Short circuit
68	Extint low in operation
69	No increments
70	Motor stalling
71	No incremental plug
73	Disturbed motor running
75	Regulator blocked
170	Invalid transmission
171	Invalid zero point
175	Starting error
222	Time-out monitoring

13.11 Explanation of the error messages

Message	Description
E001	System error
E002	Sewing motor E002/BB/xxx BB = 20: Time-out 02: Position forwards 03: Position in reverse 05: Position by shortest path 09: Write parameter 10: Speed 0A: Reset stitch counter 0B: Stop after xxx stitches 30: Time-out for increasing speed 31: Time-out for uncertain positioning 32: Time-out for time-out command 33: Time-out for deleting errors 34: Time-out for emergency stop 35: Time-out for writing parameters 36: Time-out for resetting stitch counter 37: Time-out for stop command after x stitches 38: Time-out for initialization xxx = error bytes of sewing motor control unit (see Chapter 13.10 Sewing
	Motor Errors)
E003	Section
E004	End of section
E005	Pedal activated when machine switched on
E007	End of ramp
E008	Reference for fullness adjustment not found 1: When moving towards sensor 2: When moving away from sensor
E009	Tape feed 1: Tape section too large when adjusting 2: Threading stopped after 2 attempts
E010	Hook knife not in trimming position
E011	Stepping motor stepping frequency too high
E014	Incorrect program number (larger than 49)
E015	Incorrect seam section number
E016	Memory full
E021	Power supply unit overloaded
E022	Mains voltage
E023	Power supply 24V too low
E024	Error at CAN interface

13.12 Table of inputs

E1	Knee switch hook knife on
E2	Hook knife at front
E3	not assigned
E4	Start inhibitor
E5	not assigned
E6	Knee switch
E7	not assigned
E8	not assigned
E9	not assigned
E10	not assigned
E11	not assigned
E12	not assigned
E13	not assigned
E14	not assigned
E15	Light barrier tape feed (on machines with tape feed)
E16	Reference for fullness adjustment

13.13 Table of outputs

O1	Raise sewing foot (O1.1 and O1.2)
O2	Thread trimmer (O2.1 and O2.2)
O3	not assigned
O4	not assigned
O5	Feed converter
O6	Condensed stitches
O7	Edge trimmer
O8	Extract cutting waste
O9	Feathered trimming (only 3822-2/44)
O10	Separate plies (only 3822-2/44)
O11	Clean thread monitor
O12	Reset thread monitor
O13	Tape cutting (on machines with tape feed)
O14	Blast air "front feed motion" (on machines with tape feed)
O15	Blast air "feed motion" (on machines with tape feed)
O16	Blast air "adjustment" (on machines with tape feed)

13.14 Service menu

In the service menu information is displayed about the machine's inputs and outputs, as well as the values for the pedal and the balance wheel position.
In addition the following functions can also be carried out.

- Switch on the machine.



- Call up the input mode.



- Call up the service menu.

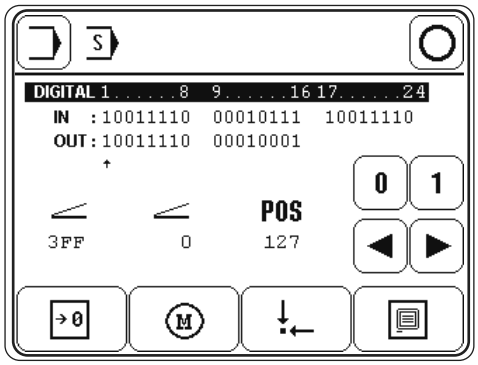

Explanation of the functions



Input mode
Quit the service menu and call up the input mode.



Sewing mode
Quit the service menu and call up the sewing mode.

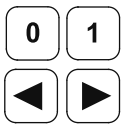

Set/reset outputs
Use the arrow functions to select the desired output and set "function 1" or reset "function 2".

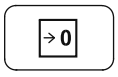

Cold start
See Chapter 13.15 Carry out a cold start.



Motors
After this function has been called up, the stepping motors for fullness and for the sewing motor can be moved. On machines with the tape feed function, the stepping motor of the tape feed unit can also be moved.

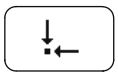

Basic position of the stepping motor
After this function has been called up, the basic position of the fullness stepping motor can be changed.



Control panel
See Chapter 9.10 Adjusting the control panel.

13.15 Carry out a cold start

- Switch on the machine.



- Call up the input mode.

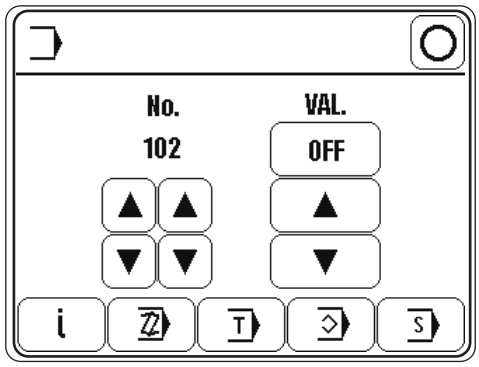



- Call up the service menu.

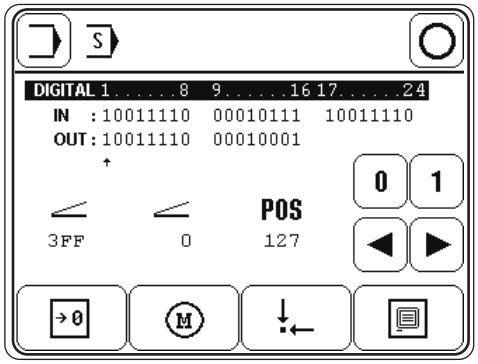

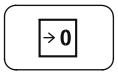

- Carry out a cold start.



After a cold start all programmed values are set back to their status at the time of delivery.
All sewing programs are also deleted.

13.16 Internet update of the machine software

The machine software can be updated with PFAFF flash programming. For this purpose the PFP boot program and the appropriate control software for the machine type must be installed on a PC. To transfer the data to the machine, the PC and the machine control unit must be connected with an appropriate null modem cable (part no. 91-291 998-91).

The PFP boot program and the control software of the machine type can be downloaded from the PFAFF-homepage using the following path:
www.pfaff-industrial.de/pfaff/de/service/downloads

To update the machine software carry out the following steps:

While the machine software is being updated, no setting up, maintenance or adjustment work may be carried out on the machine!

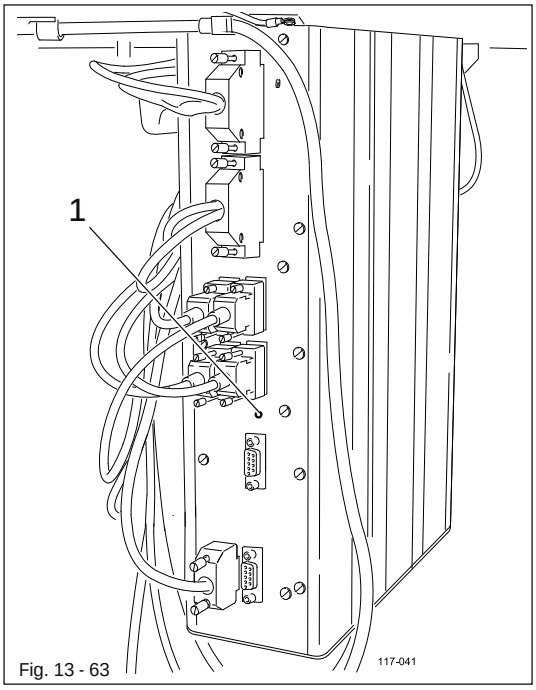

Fig. 13 - 63

- Switch off the machine.
- Connect the PC (serial interface or appropriate USB-adapter) and the machine control unit (RS232). To do so disconnect the plug of the control panel.
- Switch on the PC and start the PFP boot program.
- Select the machine type.
- Press the "programming" button.
- Hold down boot key 1 and switch on the machine.
- Press the "OK" button.

- The software update is carried out, the update progress is shown on the bar display of thePFP boot program.
- During the up-dating procedure the machine must not be switched off.
- When the update has been completed, switch off the machine and end the PFP boot program.
- End the connection between the PC and the machine control unit and reconnect the control panel to the machine control unit.
- Switch on the machine.
  A plausibility control is carried out and, if necessary, a cold start.

More information and assistance is at your disposal in the file "PFPHILFE.TXT", which can be called up from the PFP boot program by pressing the "help" button.

14 Wearing parts

This is a list of the most important wearing parts.
A detailed parts list for the complete machine is included with the accessories.
In case of loss, the parts list can be downloaded from the internet address www.pfaff-industrial.com/pfaff/en/service/downloads.
As an alternative to the internet download the parts lists can also be ordered in book form under part no. 296-12-18 592.

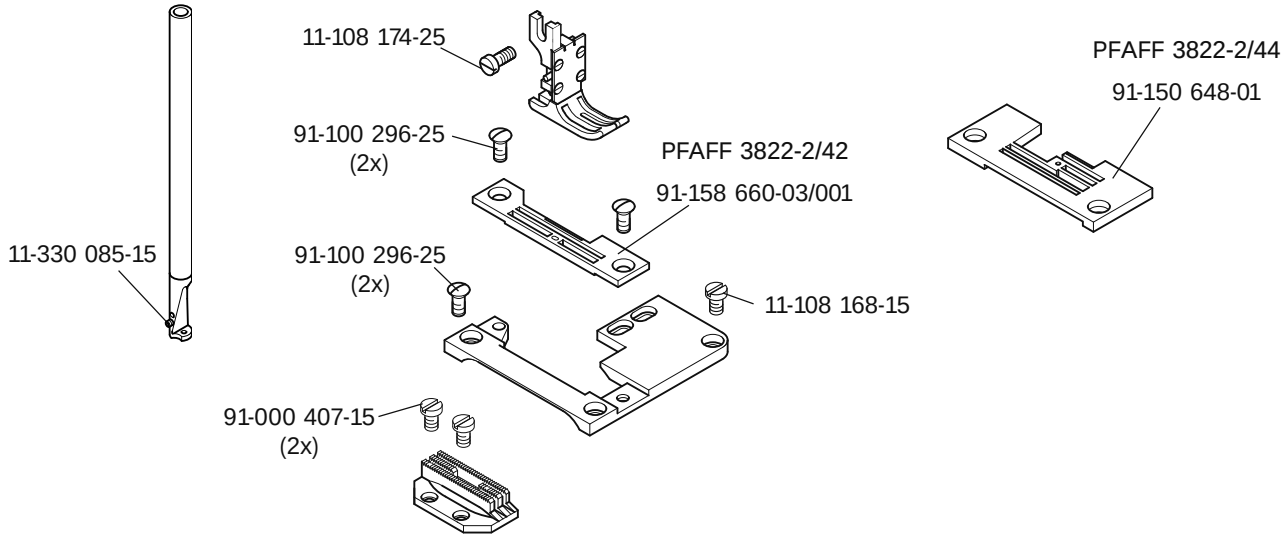

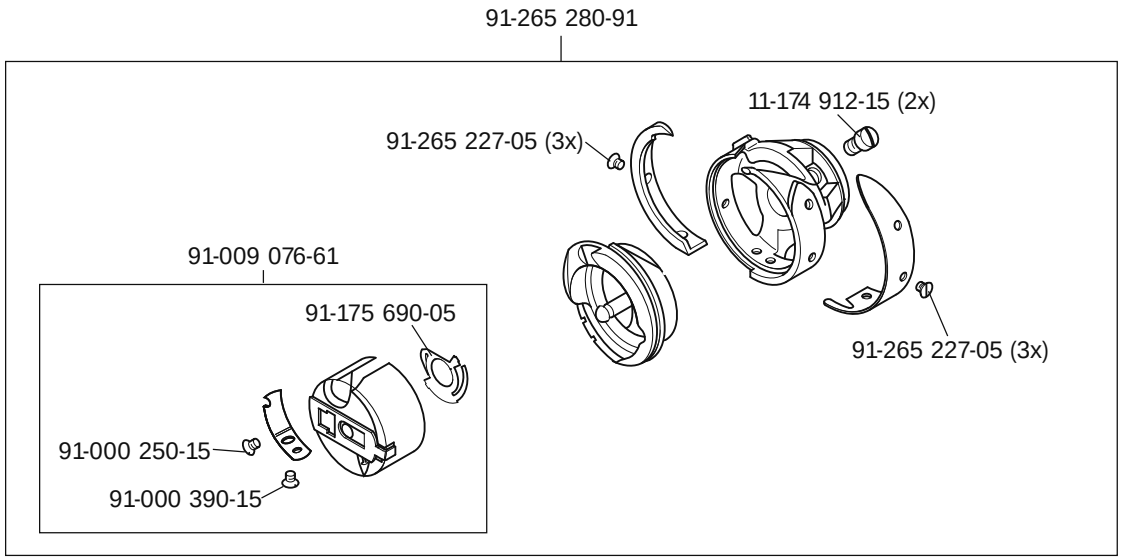



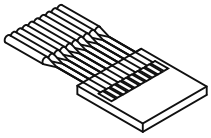
System 134 - KK

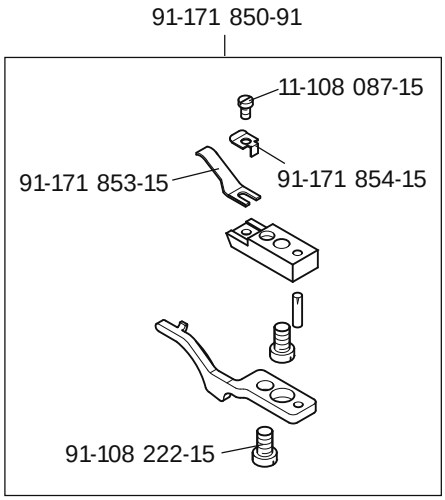

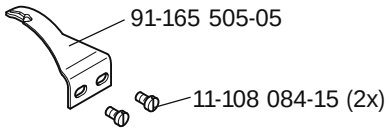

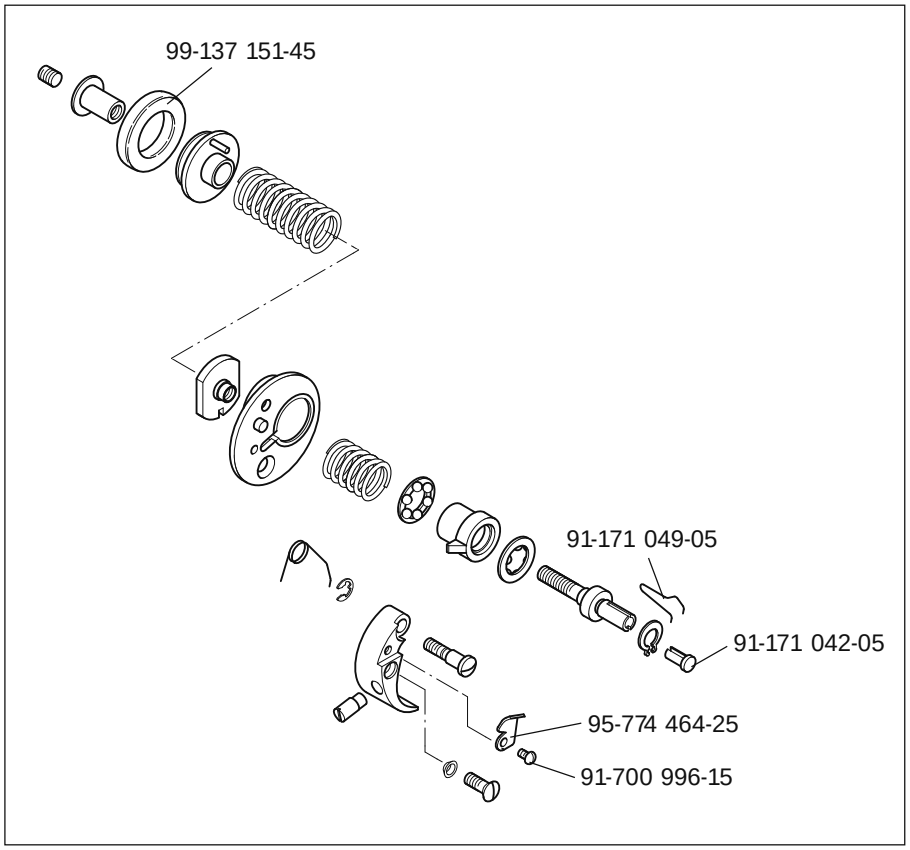

PFAFF 3822-2/42

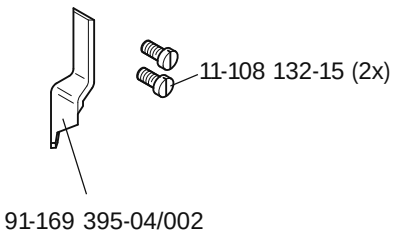

PFAFF 3822-2/44

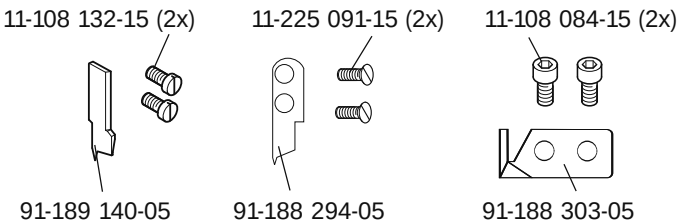

*Special version

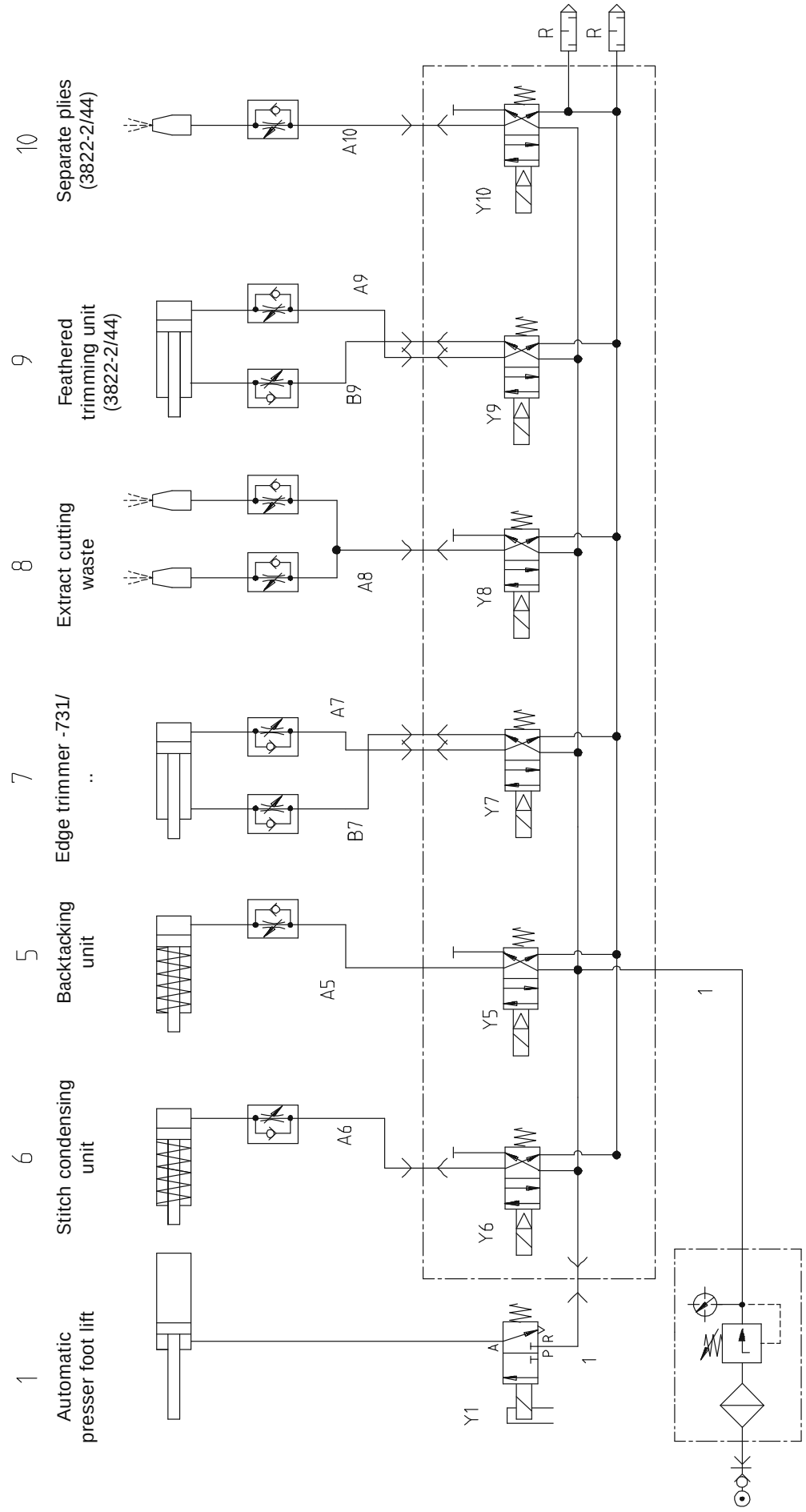
1
Automatic presser foot lift
6
Stitch condensing unit
5
Backtacking unit
7
Edge trimmer -731/ ..
8
Extract cutting waste
9
Feathered trimming unit (3822-2/44)
10
Separate plies (3822-2/44)
A1
A2
A3
A4
A5
A6
A7
A8
A9
A10
B7
B9
Y1
Y5
Y6
Y7
Y8
Y9
Y10
R
R
P
R
A
1
1

15 Circuit diagrams

Reference list for circuit diagrams

A1	Controller Quick P 320MS
A2	Control panel T1
A3	Keyboard
A14	Sewing head identification (OTE)
B2	Hook knife at front
B16	Initiator SM1, reference
H1	Sewing lamp
M1	Sewing motor
M3	Stepping motor fullness adjustment (SM1)
Q1	Main switch
S1	Knee switch (hook knife)
S6	Knee switch (program switching)
S17	Pedal speed control unit
S18	Sychronizer PD3
X1	Mains plug
X1A	RS232 – interface 1 Control panel T1
X1B	VSS Sewing head identification (OTE)
X3	Incremental transmitter (control unit)
XR3	Incremental transmitter (sewing motor)
XS3	Synchronizer PD3
X4B	Stepping motor fullness (SM1)
X5	Inputs
X8	Sewing motor
X11A	CAN interface (Keyboard)
X11B	Pedal speed control unit
X13	Outputs
X21	Stepping motor fullness (SM1)
X22	Keyboard
X31	Initiator (Keyboard)
X36	Knee switch (program switch)
X42	Initiator (hook knife)
X46	Initiator reference (SM1)
X51	Y1 910/.. Automatic presser foot lift
X52	Y2 900/.. Thread trimmer
X55	Y5 -911/.. Backtacking unit
X56	Y6 -917/.. Stitch condensing unit
X57	Y7 -731/.. Edge trimming device
X58	Y8 Extraction
X59	Y9 Feathered trimming (only on the 3822-2/44)
X60	Y10 Separate plies (only on the 3822-2/44)
Y1	-910/.. Automatic presser foot lift
Y2	-900/.. Thread trimmer
Y5	-911/.. Backtacking unit
Y6	-917/.. Stitch condensing unit
Y7	-731/.. Edge trimming device
Y8	Extraction
Y9	Feathered trimming (only on the 3822-2/44)
Y10	Separate plies (only on the 3822-2/44)

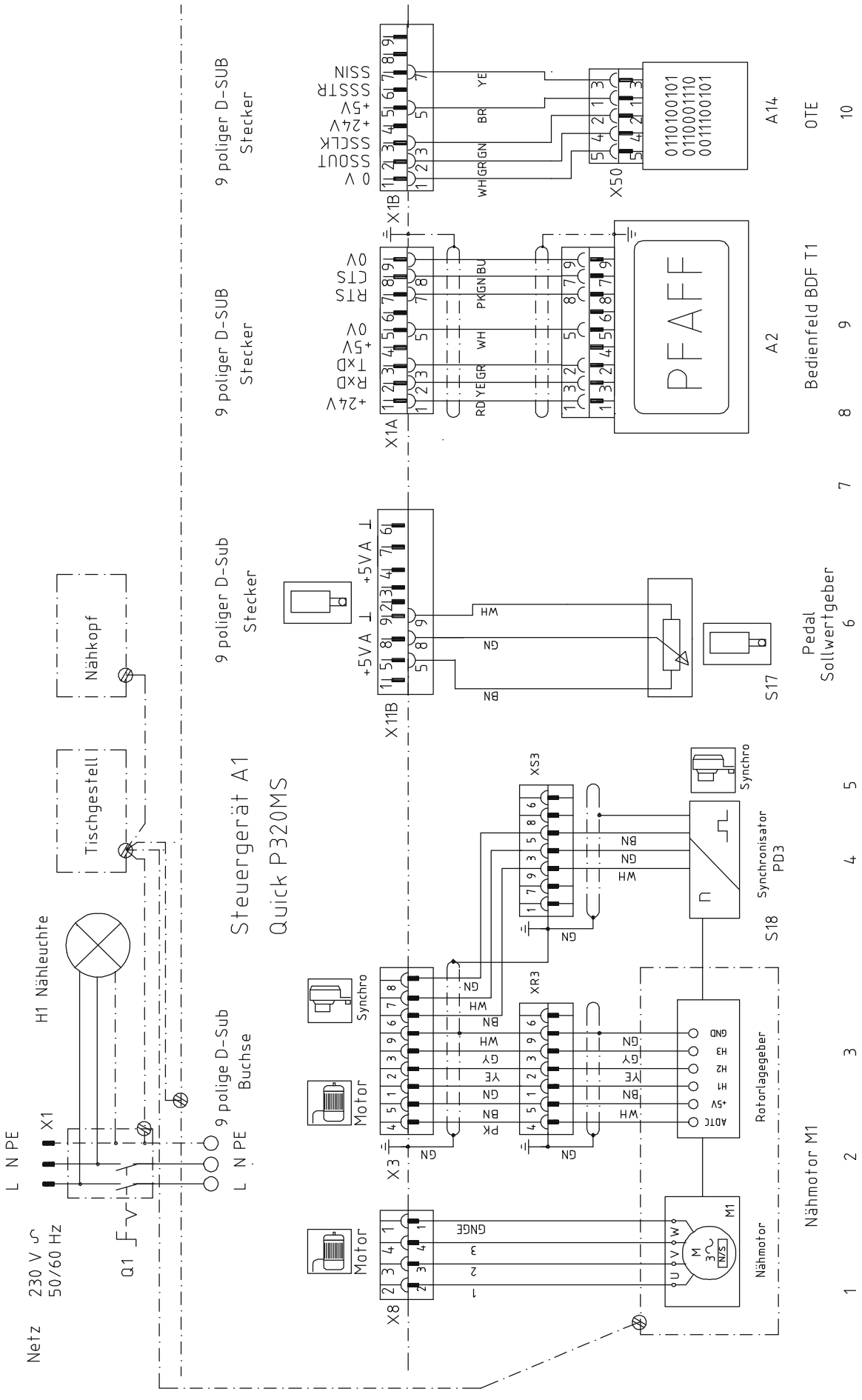
Steuergerät A1
Quick P320MS
Netz 230 V 50/60 Hz
L N PE
X1
Q1
H1 Nähleuchte
Nähkopf
Tischgestell
9 polige D-Sub Buchse
9 poliger D-SUB Stecker
9 poliger D-Sub Stecker
X1A
X1B
X11B
X3
X8
XS3
XR3
Motor
Synchro
Nähmotor M1
Synchronisator PD3
S18
Rotorlagegeber
S17
Pedal Sollwertgeber
A2
Bedienfeld BDF T1
A14
OTE
PFAFF
0110100101
0110001110
0011100101
1
2
3
4
5
6
7
8
9
10

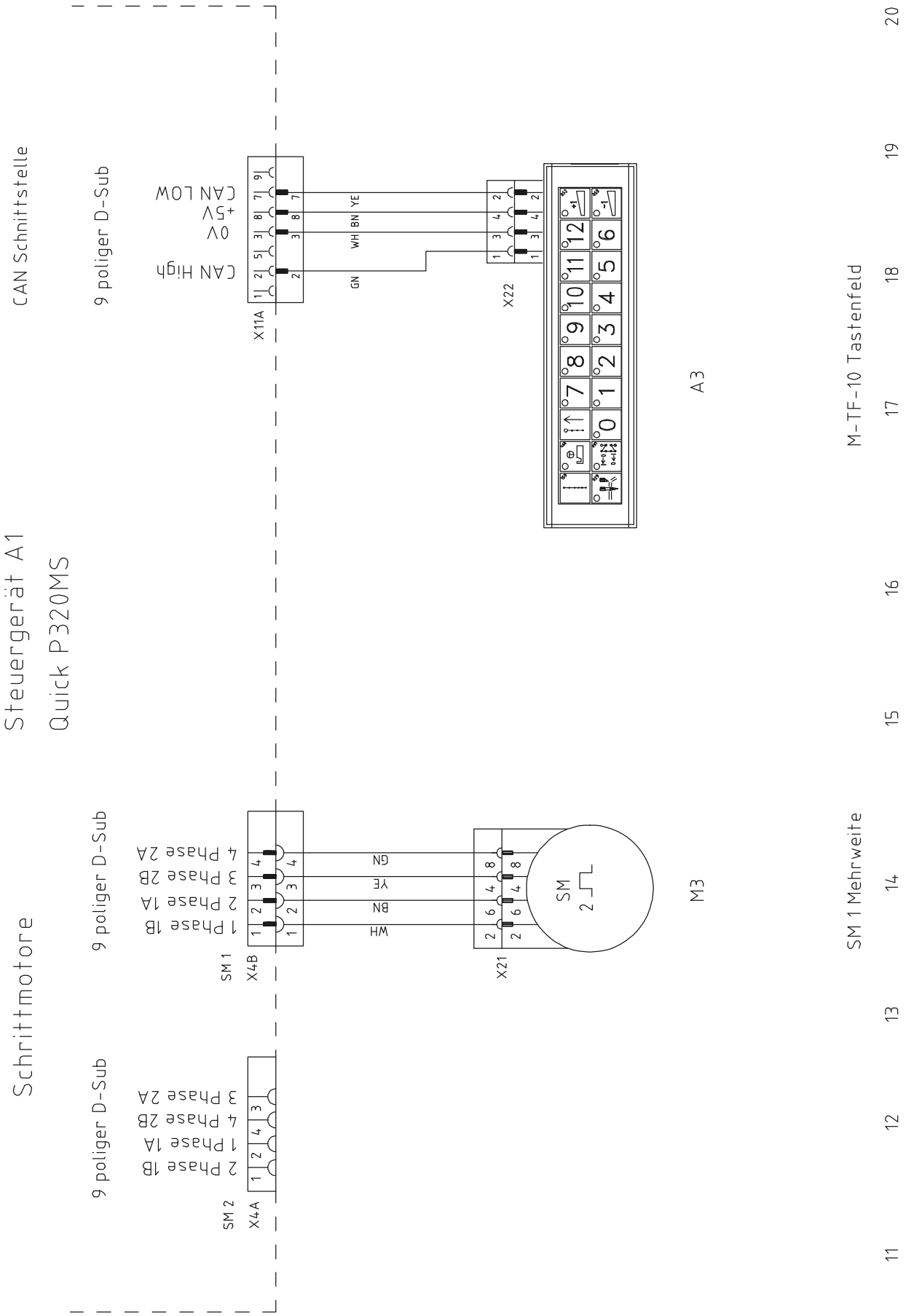
Steuergerät A1
Quick P320MS
Schrittmotore
CAN Schnittstelle
9 poliger D-Sub
CAN High
0V
+5V
CAN LOW
X11A
GN
WH
BN
YE
X22
A3
M-TF-10 Tastenfeld
9 poliger D-Sub
1 Phase 1B
2 Phase 1A
3 Phase 2B
4 Phase 2A
SM 1
X4B
WH
BN
YE
GN
X21
SM
2
M3
SM 1 Mehrweite
9 poliger D-Sub
2 Phase 1B
1 Phase 1A
4 Phase 2B
3 Phase 2A
SM 2
X4A
11
12
13
14
15
16
17
18
19
20

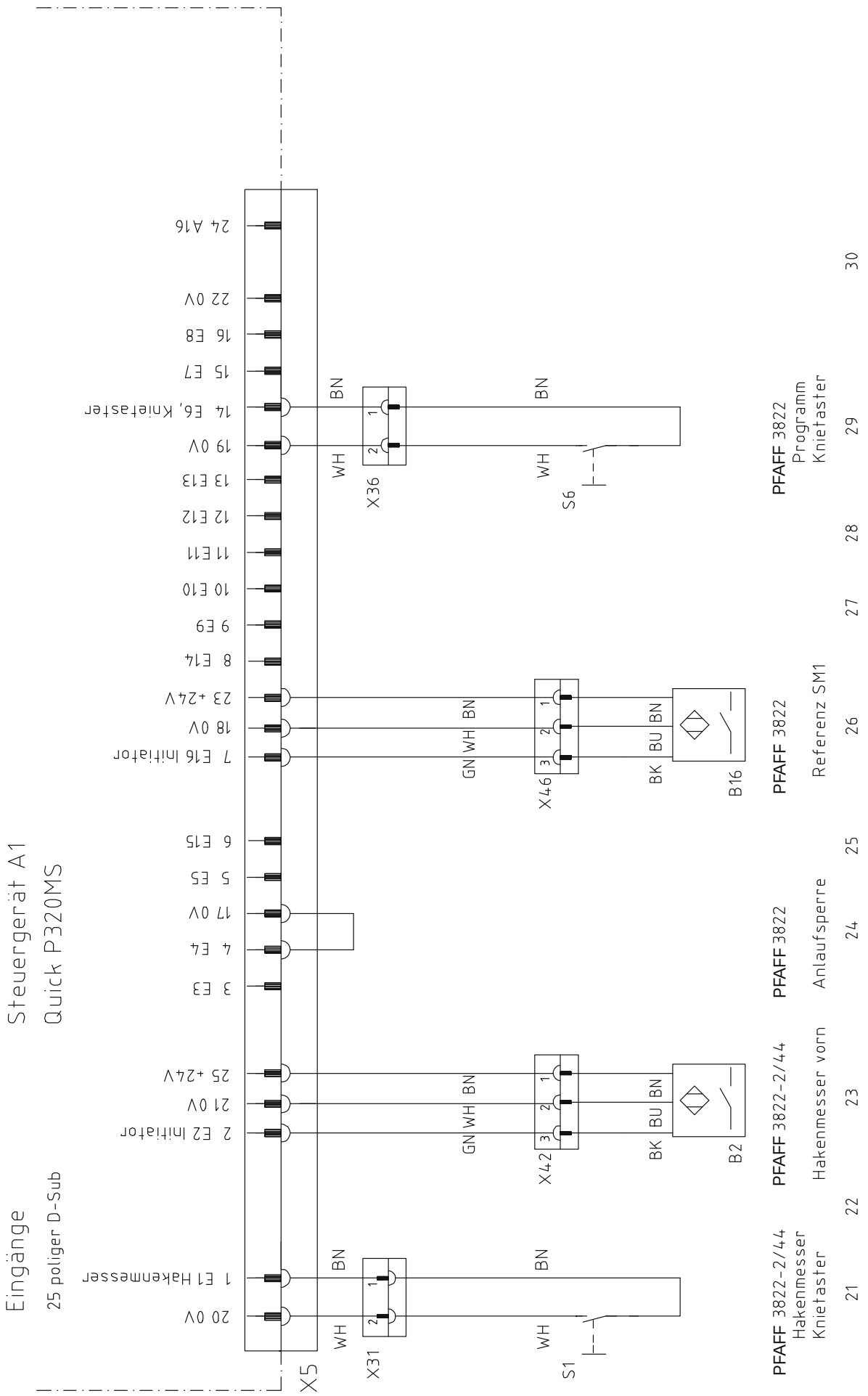
Steuergerät A1
Quick P320MS
Eingänge
25 poliger D-Sub
X5
1 E1 Hakenmesser
2 E2 Initiator
3 E3
4 E4
5 E5
6 E15
7 E16 Initiator
8 E14
9 E9
10 E10
11 E11
12 E12
13 E13
14 E6, Knietaster
15 E7
16 E8
17 0V
18 0V
19 0V
20 0V
21 0V
22 0V
23 +24V
24 A16
25 +24V
X31
X36
X42
X46
S1
S6
B2
B16
BN
WH
GN
BU
BK
PFAFF 3822-2/44
Hakenmesser
Knietaster
PFAFF 3822-2/44
Hakenmesser vorn
PFAFF 3822
Anlaufsperre
PFAFF 3822
Referenz SM1
PFAFF 3822
Programm
Knietaster
21
22
23
24
25
26
27
28
29
30

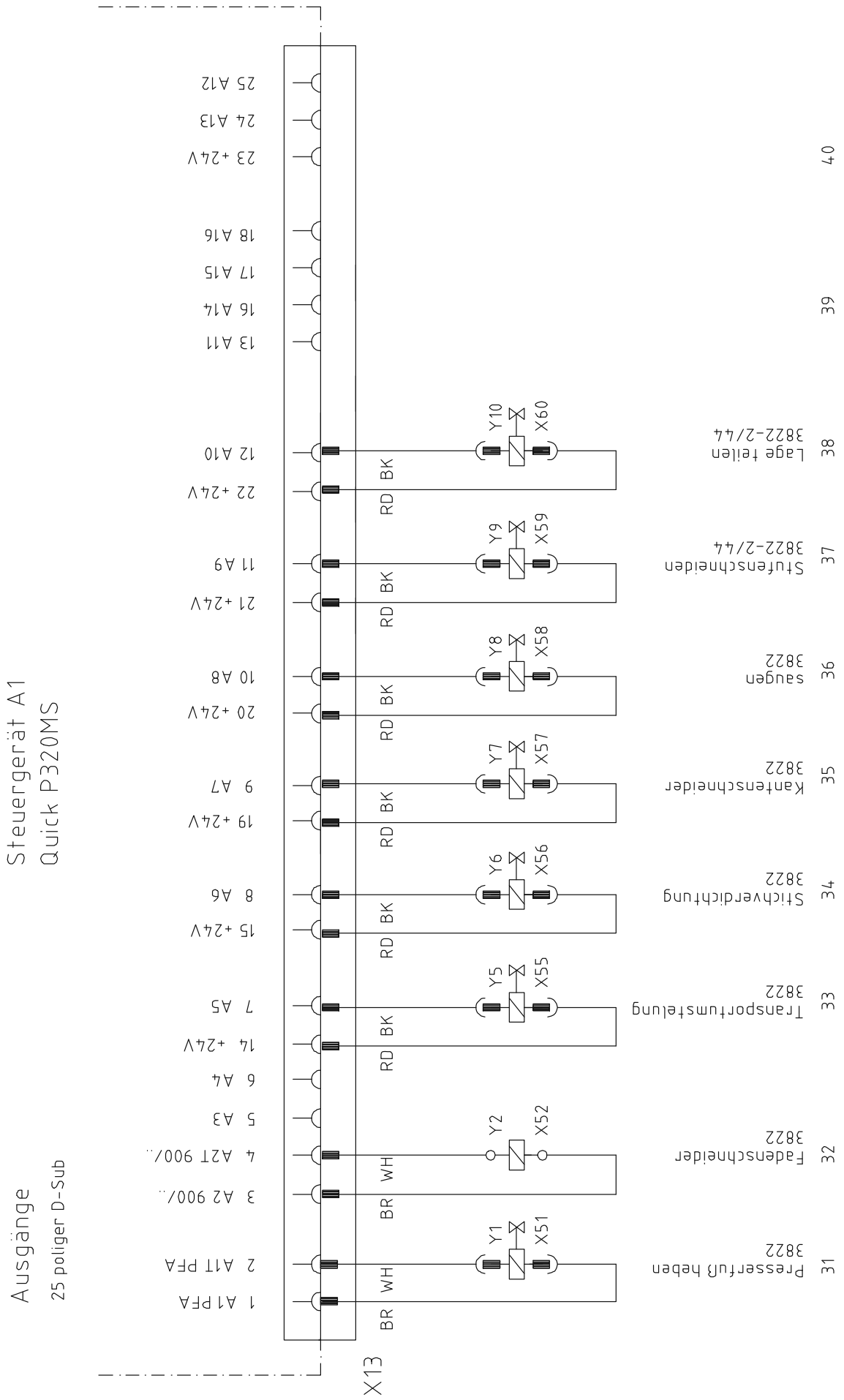
Steuergerät A1
Quick P320MS
Ausgänge
25 poliger D-Sub
X13
1 A1 PFA
2 A1T PFA
3 A2 900/..
4 A2T 900/..
5 A3
6 A4
7 A5
8 A6
9 A7
10 A8
11 A9
12 A10
13 A11
14 +24V
15 +24V
16 A14
17 A15
18 A16
19 +24V
20 +24V
21 +24V
22 +24V
23 +24V
24 A13
25 A12
WH
BR
BK
RD
Y1
X51
Y2
X52
Y5
X55
Y6
X56
Y7
X57
Y8
X58
Y9
X59
Y10
X60
31
Pressefuß heben 3822
32
Fadenschneider 3822
33
Transportumstelung 3822
34
Stichverdichtung 3822
35
Kantenschneider 3822
36
saugen 3822
37
Stufenschneiden 3822-2/44
38
Lage teilen 3822-2/44
39
40

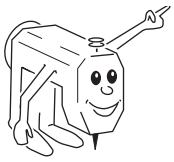

Note

PFAFF® Industrial



Europäische Union
Wachstum durch Innovation – EFRE



PFAFF Industriesysteme
und Maschinen AG

Hans-Geiger-Str. 12 - IG Nord
D-67661 Kaiserslautern

Phone: +49-6301 3205 - 0
Fax: +49-6301 3205 1386
E-mail: info@pfaff-industrial.com

Hotlines:
Technical service: +49-175/2243-101
Application consultance: +49-175/2243-102
Spare-parts hotline: +49-175/2243-103

Printed in Germany

© PFAFF Industriesysteme und Maschinen AG 2009, PFAFF is the exclusive trademark of VSM Group AB.PFAFF Industriesysteme und Maschinen AG is an authorized licensee of the PFAFF trademark.