PFAFF® Industrial

521
1521

INSTRUCTION MANUAL

This instruction manual applies to machines from the following serial numbers onwards:
2 575 639 →

296-12-18 701/002
Betriebsanleitung engl. 06.09



This Instruction Manual is valid for all models and subclasses listed in the chapter "Specifications ".

The reprinting, copying or translation of PFAFF Instruction Manuals, whether in whole or in part, is only permitted with our previous authorization and with written reference to the source.

PFAFF Industriesysteme
und Maschinen AG

Hans-Geiger-Str. 12 - IG Nord
D-67661 Kaiserslautern

Contents ..... Chapter - Page

1	**Safety**	**1 - 1**
1.01	Directives	1 - 1
1.02	General notes on safety	1 - 1
1.03	Safety symbols	1 - 2
1.04	Important points for the user	1 - 2
1.05	Operating and specialist personnel	1 - 3
1.05.01	Operating personnel	1 - 3
1.05.02	Specialist personnel	1 - 3
1.06	Danger	1 - 4
2	**Proper use**	**2 - 1**
3	**Specifications**	**3 - 1**
3.01	PFAFF 521, 1521	3 - 1
3.02	Needles and threads for the PFAFF 521	3-2
3.03	Needles and threads for the PFAFF 1521	3-2
3.04	Possible models	3-2
4	**Disposal of Machine**	**4 - 1**
5	**Transportation, packing and storage**	**5 - 1**
5.01	Transportation to customer's premises	5 - 1
5.02	Transportation inside the customer's premises	5 - 1
5.03	Disposal of packing materials	5 - 1
5.04	Storage	5 - 1
6	**Explanation of symbols**	**6 - 1**
7	**Controls**	**7 - 1**
7.01	On/off switch	7 - 1
7.02	Keys on the machine head	7 - 1
7.03	Pedal	7 - 2
7.04	Knee switch	7 - 2
7.05	Knee lever	7 - 3
7.06	Lever for lifting the roller presser	7 - 3
7.07	Bobbin thread monitoring with stitch counting	7 - 4
7.08	Bobbin thread supply monitor –926/06 (only on the PFAFF 1521)	7 - 4
7.09	Control panel	7 - 5
7.09.01	Displays on the screen	7 - 5
7.09.02	Functi0n keys	7 - 5
8	**Mounting and commissioning the machine**	**8 - 1**
8.01	Mounting	8 - 1
8.01.01	Adjusting the table-top height	8 - 1

Contents ..... Chapter - Page

8.01.02 Fitting the tilt lock ..... 8 - 2
8.01.03 Fitting the machine cover ..... 8 - 2
8.02 Mounting the flange motor ..... 8 - 3
8.02.01 Mounting the flange motor to the bearing plate ..... 8 - 3
8.02.02 Mounting the flange motor to the machine ..... 8 - 3
8.02.03 Connecting the plug-in connections and earth cables ..... 8 - 4
8.02.04 Mounting the toothed belt / Basic position of the machine drive unit ..... 8 - 5
8.02.05 Mounting the belt guard of the flange motor ..... 8 - 6
8.02.06 Connecting the safety switch ..... 8 - 7
8.02.07 Checking the function of the start inhibitor ..... 8 - 7
8.03 Mounting the spool holder ..... 8 - 8
8.04 Table top cutout ..... 8 - 8
8.05 Commissioning ..... 8 - 9
8.06 Turning the machine on/off ..... 8 - 9

9 Setting up ..... 9 - 1
9.01 Inserting the needle ..... 9 - 1
9.02 Winding the bobbin thread, adjusting the thread tension ..... 9 - 2
9.03 Removing/inserting the bobbin case on the PFAFF 521 ..... 9 - 3
9.04 Threading the bobbin case, adjusting the bobbin thread tension on the PFAFF 521 ..... 9 - 3
9.05 Bobbin-changing/threading, and regulating the bobbin thread tension ..... 9 - 4
on the PFAFF 1521 ..... 9 - 4
9.06 Threading the needle thread / Adjusting the needle thread tension ..... 9 - 5
9.07 Entering the stitch length ..... 9 - 6
9.07.01 Entering the standard stitch length ..... 9 - 6
9.07.02 Entering a second stitch length or amount of fullness ..... 9 - 6
9.08 Entering the start and end backtacks ..... 9 - 7
9.09 Entering/changing the code number ..... 9 - 8
9.10 Setting the stitch count function
(on machines with bobbin thread control by stitch counting) ..... 9 - 10
9.11 Setting the stitch count function ..... 9 - 11
(on machines with bobbin thread supply monitor -926/06) ..... 9 - 11

10 Sewing ..... 10 - 1
10.01 Manual sewing ..... 10 - 1
10.02 Programmed sewing ..... 10 - 2
10.03 Program interruption ..... 10 - 3
10.04 Error messages ..... 10 - 4

11 Input ..... 11 - 1
11.01 Summary of the functions in the input mode ..... 11 - 1
11.01.01 Summary of the parameter functions ..... 11 - 1
11.01.02 Summary of the seam program inputs ..... 11 - 2
11.02 Seam program input variants ..... 11 - 4

Contents ..... Chapter - Page

11.03	Altering existing seam programs	11 - 5
11.04	Deleting seam programs	11 - 8
11.05	Seam programming examples	11 - 9
11.05.01	An example for seam program input	11 - 9
11.05.02	Seam input example using the Teach In method	11 - 16
12	**Care and maintenance**	**12 - 1**
12.01	Cleaning	12 - 1
12.02	Filling the oil reservoir	12 - 2
12.03	Lubricating the bevel gears	12 - 2
13	**Adjustment**	**13 - 1**
13.01	Notes on adjustment	13 - 1
13.02	Tools, gauges and other accessories for adjusting	13 - 1
13.03	Abbreviations	13 - 1
13.04	Adjusting the basic machine	13 - 2
13.04.01	Needle position in the direction of sewing	13 - 2
13.04.02	Positioning the needle crosswise to the direction of sewing	13 - 3
13.04.03	Limiting the needle bar frame	13 - 4
13.04.04	Preadjusting the needle height	13 - 5
13.04.05	Hook-to-needle clearance, needle rise, needle height and needle guard	13 - 6
13.04.06	Balancing weight	13 - 8
13.04.07	Bobbin-case-opener eccentric and retaining lug	13 - 9
13.04.08	Bobbin case opener position	13 - 10
13.04.09	Feed wheel	13 - 11
13.04.10	Clearance between roller presser and feed wheel	13 - 12
13.04.11	Roller presser	13 - 13
13.04.12	Automatic presser-foot lifter	13 - 14
13.04.13	Knee lever	13 - 15
13.04.14	Tension release	13 - 16
13.04.15	Thread check spring	13 - 17
13.04.16	Bobbin winder	13 - 18
13.04.17	Roller presser pressure	13 - 19
13.04.18	Re-engage safety coupling	13 - 20
13.05	Adjusting the thread trimmer -900/61	13 - 21
13.05.01	Preadjusting the control cam	13 - 21
13.05.02	Roller lever	13 - 22
13.05.03	Engaging solenoid	13 - 23
13.05.04	Actuating lever	13 - 24
13.05.05	Connecting rod	13 - 25
13.05.06	Thread-catcher height	13 - 26
13.05.07	Thread-catcher position	13 - 27
13.05.08	Knife pressure	13 - 28
13.05.09	Bobbin-thread clamp spring	13 - 29

Contents ..... Chapter - Page

13.05.10	Control cam final adjustment	13 - 30
13.05.11	Manual cutting test	13 - 31
13.05.12	Tension release (during trimming process)	13 - 32
13.06	Adjusting the bobbin thread supply monitor -926/06	13 - 33
	(only on the PFAFF 1521)	13 - 33
13.07	Parameter settings	13 - 34
13.07.01	Parameter input example	13 - 34
13.07.02	List of parameters	13 - 35
13.08	Explanation of the error messages	13 - 39
13.09	Warning messages	13 - 39
13.10	Carrying out a cold start	13 - 40
13.11	Internet update of the machine software	13 - 41
14	Wearing parts	13 - 1
15	Circuit diagrams	14 - 1

1 Safety

1.01 Directives

This machine is constructed in accordance with the European regulations contained in the conformity and manufacturer's declarations.
In addition to this Instruction Manual, observe also all generally accepted, statutory and other regulations and legal requirements and all valid environmental protection regulations!
The regionally valid regulations of the social insurance society for occupational accidents or other supervisory organisations are to be strictly adhered to!

1.02 General notes on safety

- This machine may only be operated by adequately trained operators and only after having completely read and understood the Instruction Manual!
- All Notes on Safety and Instruction Manuals of the motor manufacturer are to be read before operating the machine!
- The danger and safety instructions on the machine itself are to be followed!
- This machine may only be used for the purpose for which it is intended and may not be operated without its safety devices. All safety regulations relevant to its operation are to be adhered to.
- When exchanging sewing tools (e.g. needle, roller presser, needle plate or bobbin), when threading the machine, when leaving the machine unattended and during maintenance work, the machine is to be separated from the power supply by switching off the On/Off switch or by removing the plug from the mains!
- Everyday maintenance work is only to be carried out by appropriately trained personnel!
- Repairs and special maintenance work may only be carried out by qualified service staff or appropriately trained personnel!
- Work on electrical equipment may only be carried out by appropriately trained personnel!
- Work is not permitted on parts and equipment which are connected to the power supply! Exceptions to this are only to be found in the regulations EN 50110.
- Modifications and alterations to the machine may only be carried out under observance of all the relevant safety regulations!
- Only spare parts which have been approved by us are to be used for repairs! We expressly point out that any replacement parts or accessories which are not supplied by us have not been tested and approved by us. The installation and/or use of any such products can lead to negative changes in the structural characteristics of the machine. We shall not be liable for any damage which may be caused by non-original parts.

1.03 Safety symbols



Danger!
Points to be observed.



Danger of injury for operating and specialist personnel!



Caution

Do not operate without finger guard and safety devices. Before threading, changing bobbin and needle, cleaning etc. switch off main switch.

1.04 Important points for the user

- This Instruction Manual is a component part of the machine and must be available to the operating personnel at all times.
- The Instruction Manual must be read before operating the machine for the first time.
- The operating and specialist personnel is to be instructed as to the safety equipment of the machine and regarding safe work methods.
- It is the duty of the user to only operate the machine in perfect running order.
- It is the obligation of the user to ensure that none of the safety mechanisms are removed or deactivated.
- It is the obligation of the user to ensure that only authorized persons operate and work on the machine.

Further information can be obtained at your PFAFF agent.

1.05 Notes for operating and technical staff

1.05.01 Operating staff

Operating staff are the persons responsible for setting up, operating and cleaning the machine and for eliminating any malfunctioning in the sewing area.

The operating staff is obliged to observe the following points:

- The notes on safety in this instruction manual must always be observed!
- Any working methods, which adversely affect the safety of the machine, must be avoided.!
- Loose-fitting clothing should be avoided. No jewellery, such as chains and rings, should be worn!
- Ensure that only authorised persons enter the danger area of the machine!
- Any changes occurring on the machine, which may affect its safety, must be reported to the user immediately.

1.05.02 Technical staff

Technical staff are persons who have been trained in electrical engineering/electronics and mechanical engineering. They are responsible for lubricating, servicing, repairing and adjusting the machine.

The technical staff is obliged to observe the following points:

- The notes on safety in this instruction manual must always be observed!
- Before carrying out any adjustment or repair work the main switch must be switched off and measures taken to prevent it from being switched on again!
- Never work on parts or equipment still connected to the power supply! Exceptions are only permissible in accordance with the regulations EN 50110.
- All safety covers must be replaced after the completion of maintenance or repair work!

1.06 Danger

A working area of 1 meter is to be kept free both in front of and behind the machine while it is in operation so that it is always easily accessible.

Never reach into the sewing area while sewing! Danger of injury by the needle!

Never leave objects on the table or in the needle plate area while adjusting the machine settings! Objects can become trapped or be slung away! Danger of injury!

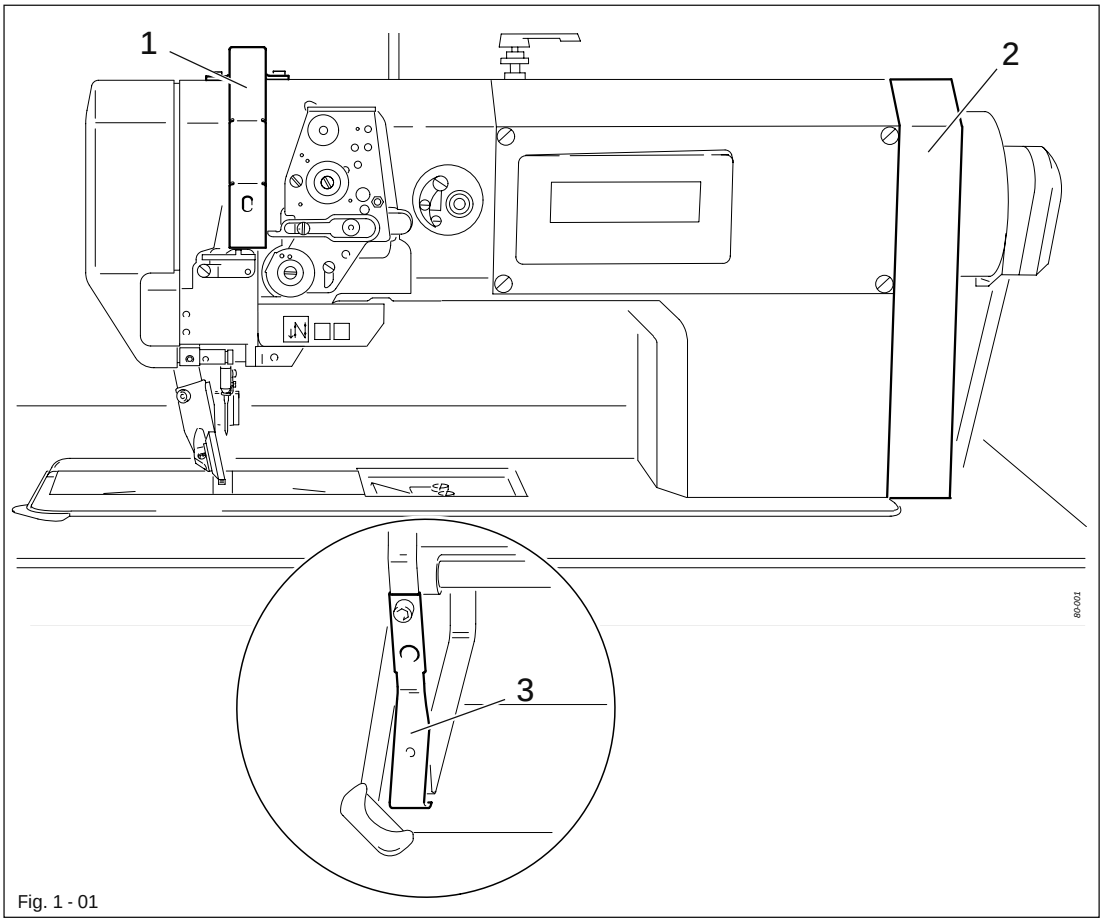

Fig. 1 - 01

Do not operate the machine without the take-up lever guard 1!
Danger of injury due to the the motion of the take-up lever!

Do not operate the machine without machine cover 2!
Danger of injury from moving parts!

Do not operate the machine without tilt lock 3!
Danger of crushing between sewing head and table top!

2 Proper use

The PFAFF 521 is a high-speed, single-needle sewing machine with forward- and reverse-feeding feed wheel and roller presser, as well as needle feed.

The PFAFF 1521 is a high-speed, single-needle sewing machine with large sewing hook, with forward- and reverse-feeding feed wheel and roller presser, as well as needle feed.

These machines are used for sewing lockstitch seams in the leather and upholstery industries.



Any and all uses of this machine which have not been approved of by the manufacturer are considered to be inappropriate! The manufacturer cannot be held liable for any damage caused by the inappropriate use of the machine! The appropriate use of the machine includes the observance of all operational, adjustment, maintenance and repair measures required by the manufacturer!

3 Specifications

3.01 PFAFF 521, 1521▲

Stitch type: ..... 301 (lockstitch)

Needle system PFAFF 521: 134
Needle system PFAFF 1521: 134-35

Handwheel eff. dia.: ..... 65 mm
Clearance under roller presser: ..... 7 mm
Clearance width: ..... 245 mm
Clearance height: ..... 115 mm

Sewing head dimensions:
Length: ..... approx. 615 mm
Width: ..... approx. 240 mm
Height (above table): ..... approx. 320 mm
Bedplate dimensions: ..... 518 x 177 mm

Max. speed: ..... 3500 spm ◆

Connection data:
Operating voltage: ..... 230 V ± 10 %, 50/60 Hz
Max. power consumption: ..... 1,2 kVA
Fuse protection: ..... 1 x 16 A, inert

Working noise level:
Emission level at workplace at appropriate speed
(Noise measurement in accordance with DIN 45 635-48-A-1, ISO 11204, ISO 3744, ISO 4871)
PFAFF 521, model A at a speed of 2800 spm: ..... L_{pA} = 81 dB(A) ■
PFAFF 521 and 1521, model B at a speed of 2800 spm: ..... L_{pA} = 81 dB(A) ■
PFAFF 521 and 1521, model C at a speed of 1600 spm: ..... L_{pA} = 74 dB(A) ■

Net weight of sewing head: ..... approx. 61 kg
Gross weight of sewing head: ..... approx. 71 kg

■ K_{pA} = 2,5 dB

▲ Subject to alteration

◆ Dependent on material, work operation and stitch length

3.02 Needles and threads for the PFAFF 521

Model	Thread thickness ◂ max. synthetic	Needle size in 1/100 mm	Needle system
A	60/3	70	134
B	40/3	100	134
C	15/3	130	134

▲ or similar strengths of other types of thread

3.03 Needles and threads for the PFAFF 1521

Model	Thread thickness ◂ max. synthetic	Needle size in 1/100 mm	Needle system
B	40/3	100	134 - 35
C	15/3	130	134 - 35

▲ or similar strengths of other types of thread

3.04 Possible models

Model A (only the PFAFF 521)..... For sewing lightweight materials
Model B .....For sewing medium-weight materials
Model C ..... For sewing medium-heavy materials

4 Disposal of machines

- The proper disposal of machines is the responsibility of the customer.
- The materials used in the machines are steel, aluminium, brass and various plastics. The electrical equipment consists of plastics and copper.
- The machine is to be disposed of in accordance with the locally valid environmental protection regulations. If necessary, a specialist is to be commissioned.



Special care is to be taken that parts soiled with lubricants are separately disposed of in accordance with the locally valid pollution control regulations!

5 Transport packaging and storage

5.01 Transport to the customer's premises

Within Germany, complete machines (with table and motor) are delivered without packaging. Machines without a table (sewing head with motor only) and machines for export are packaged.

5.02 Transport within the customer's premises

The manufacturer bears no liability for transport within the customer's premises.
Always ensure that the machine is only transported upright.

5.03 Disposal of the packaging

The packaging of the machines consists of paper, cardboard and VCE fibre.
The proper disposal of the packaging is the responsibility of the customer.

5.04 Storage

The machines can be stored for up to 6 months if not in use. During this time they should be protected from dust and moisture.
For longer storage the individual parts of the machines, especially the moving parts, should be protected against corrosion, e.g. by a film of oil.

6 Explanation of the symbols

In the following section of this Instruction Manual, certain tasks or important pieces of information are accentuated by symbols.
The symbols used have the following meanings:



Note, information



Cleaning, care



Lubrication, greasing

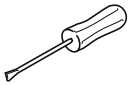

Servicing, repairing, adjustment, maintenance
(only to be carried out by specialist personnel)

7 Controls

7.01 On/off switch

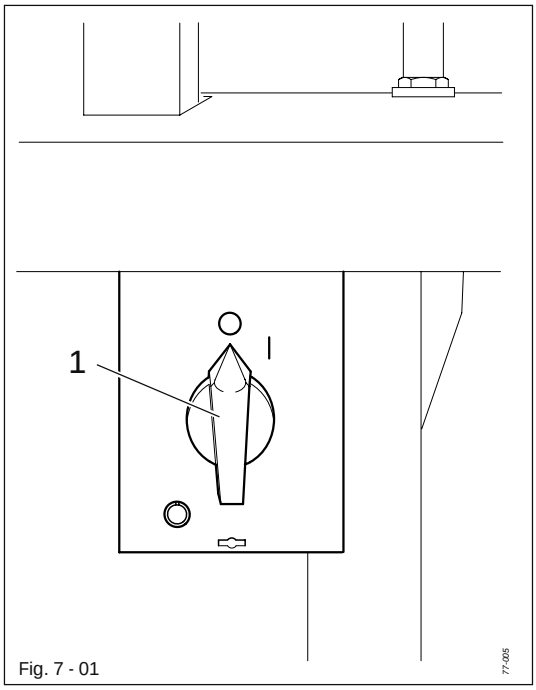

Fig. 7 - 01

- Turn the machine on/off by turning On/Off switch 1.

7.02 Keys on the machine head

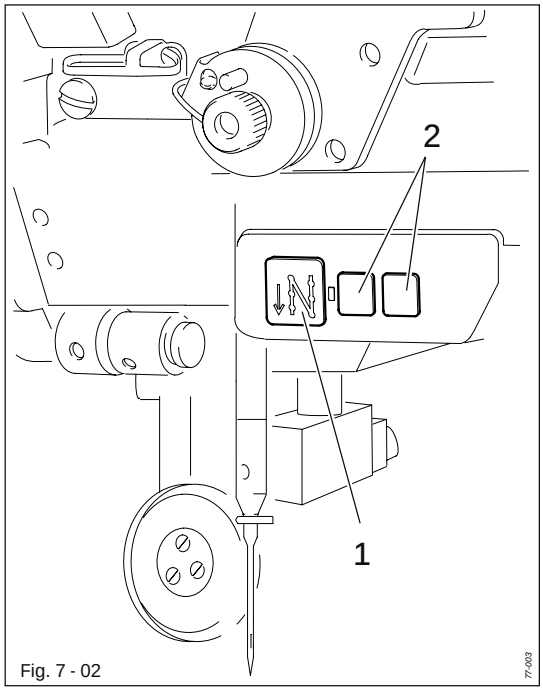

Fig. 7 - 02

- As long as key 1 is pressed in the sewing mode, the machine sews in reverse.
- With parameters "203" and "204" functions can be allotted to the keys 2, see Chapter 13.07 Parameter settings.

7.03 Pedal

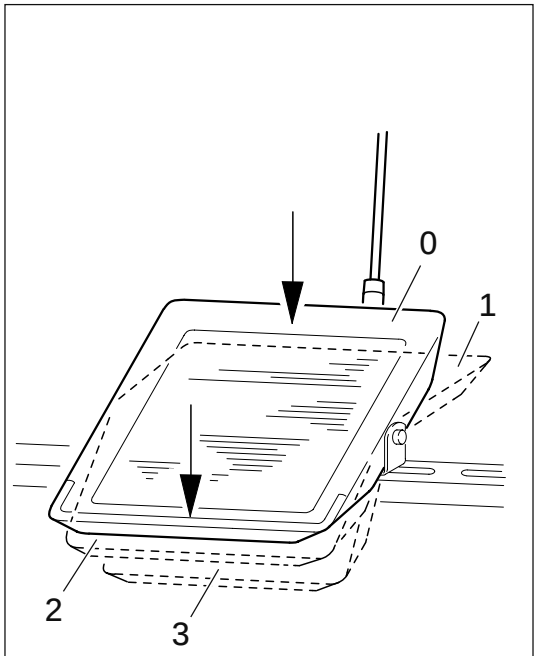

Fig. 7 - 03

- Different functions are triggered by different pedal positions.

0 = Machine stop

1 = Sew

2 = Raise roller-presser

3 = Trim thread and raise roller presser

Other pedal functions can be set by changing the parameters, see Chapter 13.07 Parameter settings.

7.04 Knee switch

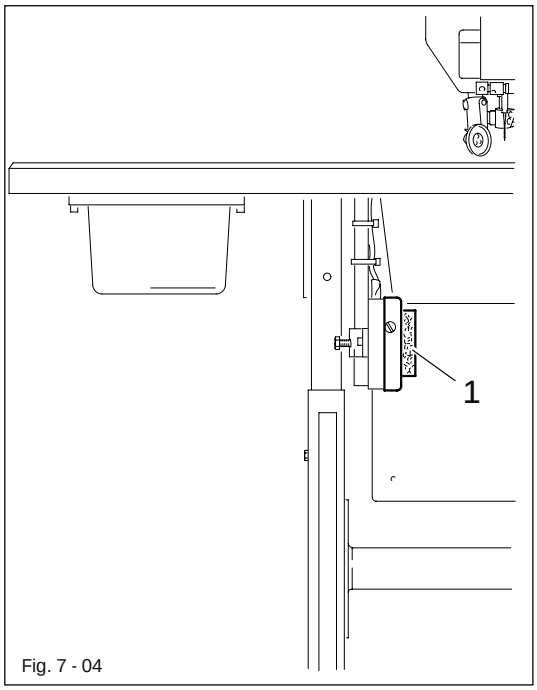

Fig. 7 - 04

- In the manual sewing mode it is possible to choose between 2 pre-set amounts of fullness or 2 stitch lengths using knee switch 1.
- When this function is activated in the programmed sewing mode, the next seam section is selected.

The function of knee switch 1 must be switched on from the control panel, see Chapter 9.07.02 Entering a second stitch length or amount of fullness or Chapter 7.09.02 Function keys.

7.05 Knee lever

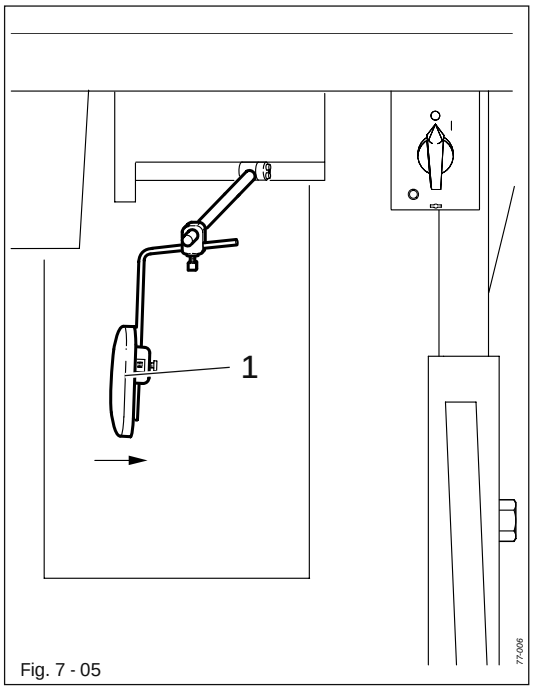

Fig. 7 - 05

- The roller presser is raised by pressing the knee lever 1 in the direction of the arrow.

7.06 Lever for lifting the roller presser

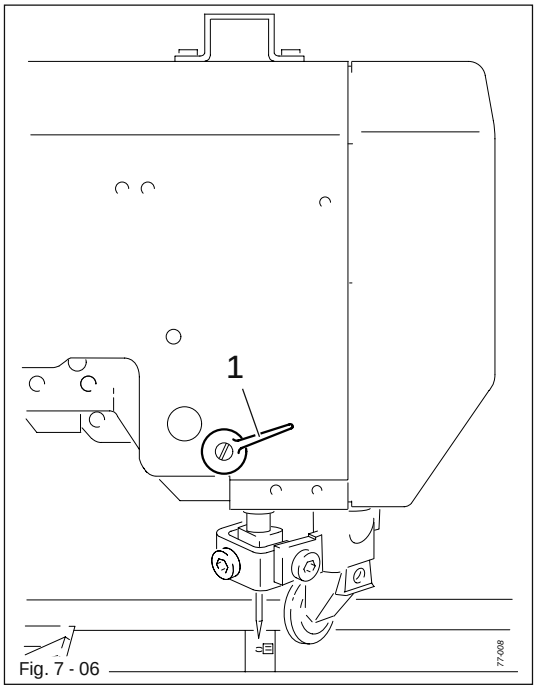

Fig. 7 - 06

- The roller presser is raised by turning lever 1.

7.07 Bobbin thread monitoring with stitch counting

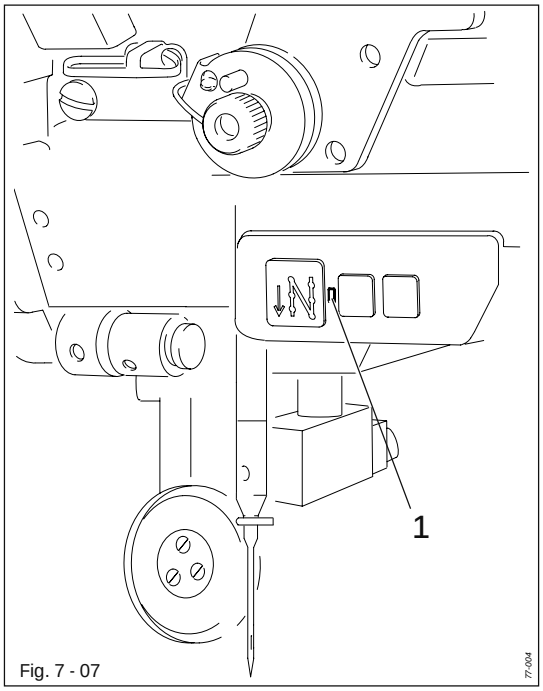

Fig. 7 - 07

- Approx. 100 stitches before reaching the set number of stitches, the LED 1 starts to flash.
- After the thread has been trimmed and the bobbin changed, the stitch counting starts from the beginning again.

Pre-setting the number of stitches, see Chapter 9.10 Setting the stitch counter

7.08 Bobbin thread supply monitor –926/06 (only on the PFAFF 1521)

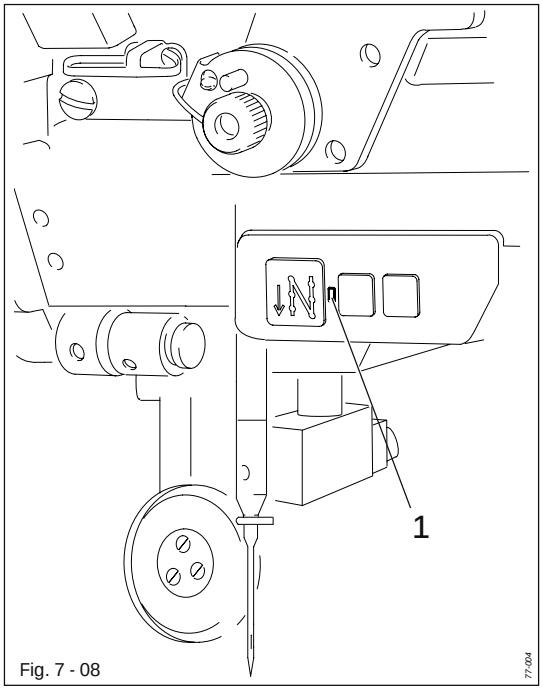

Fig. 7 - 08

- After reaching the set amount of remaining thread, LED 1 starts to flash. It is possible to sew to the end of the seam being sewn.

After the thread has been trimmed, the signal "WARNING 2" appears on the display. After the bobbin has been changed, a random key must be pressed before it is possible to continue sewing.

7.09 Control panel

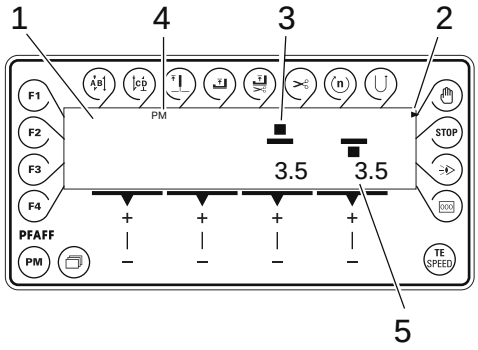

The control panel consists of display 1 and the function keys described below. Display 1 consists of a two-row, alpha-numerical display with 16 symbols per row. The special symbols 3 and texts 4 show the respective status of the function keys and the operating modes of the machine.
During the power-on phase the control panel automatically switches on all LCD segments and the horn. Afterwards the lettering PFAFF appears on the display, until the higher-ranking control unit sends commands to the control panel.

7.09.01 Displays on the screen

- Connected functions are shown with a triangular symbol 2 below or next to the respective function key.
- In sewing mode all relevant sewing data is displayed and can be changed directly depending on the machine status, also see Chapter 10 Sewing.
- When entering the parameters, the selected parameter number with the corresponding parameter value is displayed, see Chapter 13.07.01 Parameter input.
- When entering the seam programs, the data is entered in corresponding input menus, see Chapter 11 Input.

7.09.02 Function keys

The function keys described below are used basically to switch the machine functions on and off.

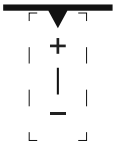

If a value must be given for the activated function, this is entered with the relevant +/- key. By pressing down the relevant +/- key the corresponding value 5 is changed slowly. If the +/- key is held down longer, the values change more quickly.



Start backtacks

- By pressing this key, the backtacking function at the beginning of the seam (start backtacks) is switched on or off. The number of forward stitches (A) or reverse stitches (B) for the start backtacks can be changed in each case by pressing the +/- key underneath. To convert from double backtacks to single backtacks the relevant number of stitches for the seam segment is set at zero.
- When entering the code number, the key corresponds to the number 1.



End backtacks

- By pressing this key, the backtacking function at the end of the seam (end backtacks) is switched on or off. The number of reverse stitches (C) or forward stitches (D) can be changed in each case by pressing the +/- key underneath. To convert from double backtacks to single backtacks the relevant number of stitches for the seam segment is set at zero.
- When entering the code number, the key corresponds to the number 2.



Needle position

- By pressing this key the function "Needle raised after sewing stop" is switched on or off. When the function is switched on, the needle positions at t.d.c. after sewing stops.
- When entering the code number, the key corresponds to the number 3.



Foot position after stop

- By pressing this key the function "Foot raised after sewing stop" is switched on or off. When the function is switched on, the sewing foot is raised after sewing stops.
- When entering the code number, the key corresponds to the number 4.



Foot position after trimming

- By pressing this key the function "Foot raised after thread trimming" is switched on or off. When the function is switched on, the sewing foot is raised after sewing thread trimming.
- When entering the code number, the key corresponds to the number 5.



Thread trimmer

- By pressing this key the thread trimming function is switched on or off.
- When entering the code number, the key corresponds to the number 6.



Speed

- With this key for each seam section a maximum speed can be set, which is only activated in the relevant seam section.
- When entering the code number, the key corresponds to the number 7.



Reverse sewing

- By pressing this key the reverse sewing function is switched on or off.
- When entering the code number, the key corresponds to the number 8.



Program interruption

- By pressing this key the automatic processing of a sewing program is interrupted. The stitch count function is switched off and some of the sequences are changed.
- When entering the code number, the key corresponds to the number 9.



Stop

- By pressing this key the corresponding function is switched on or off. If the function is activated, in the programmed sewing mode the machine stops automatically at the end of the seam section.
  In the manual sewing mode, if this function is activated, the roller presser and feel wheel drive are switched off, in order to e.g. wind the bobbin outside the sewing operation.
- When entering the code number, the key corresponds to the number 10.



Sensor

- By pressing this key the corresponding function is switched on or off. When the function is switched on, the sensor moves on to the next seam section.



Stitch counting

- By pressing this key the corresponding function is switched on or off. When the function is switched on, the machine moves to the next sewing section after the number of stitches entered have been sewn.



TE/Speed

- By pressing this key once the speed limitation for sewing mode is activated.
- By pressing the key twice (within 5 seconds) the machine switches from sewing mode to input mode.



Scrolling

- When this key is pressed, it is possible to scroll through the input menus on the display.



PM

- By pressing this key the Programmed Sewing function is switched on or off. When the function is switched on, the lettering "PM" appears in the display of the control panel. The parameters of the programs are shown in the alpha-numerical section of the display.



F1

- When this key is pressed, the stitch placement function at the beginning of the seam is switched on or off. The corresponding needle position is set on the keyboard and by turning the balance wheel.



F2

- This key is not assigned at present.



F3

- When this key is pressed the corresponding function is switched on or off. When the function is activated, the machine moves to the next seam section with the use of the knee switch



F4

- After this key has been pressed, the next bartack is not sewn.

8 Mounting and commissioning the machine

The machine must only be mounted and commissioned by qualified personnel!
All relevant safety regulations are to be observed!

If the machine is delivered without a table, it must be ensured that the frame and the table top which you intend to use can hold the weight of the machine and the motor, even while sewing.

8.01 Mounting

The necessary electricity supply must be available at the machine's location.
There must be a stable and horizontal surface and adequate lighting at the machine's location.

Due to reasons of packaging, the table top is lowered for transport. The following is a description of how to adjust the height of the table top.

8.01.01 Adjusting the table-top height

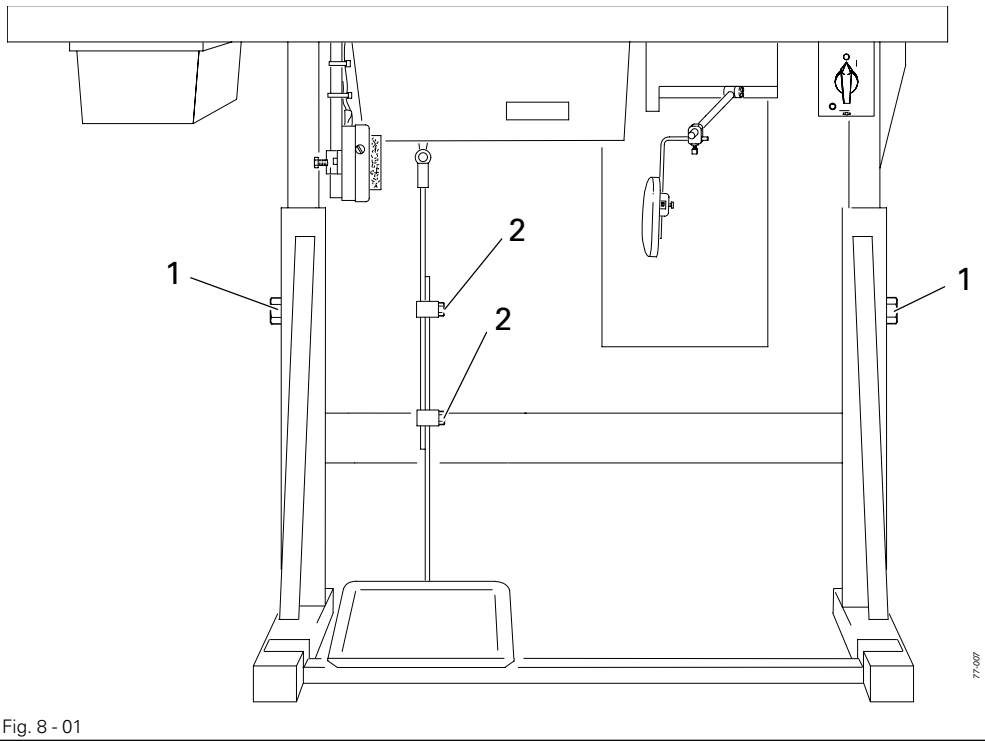

Fig. 8 - 01

- Loosen screws **1** and **2** and set the desired table-top height.
- Tighten screws **1** well.
- Adjust the position of the pedal so that you can operate it comfortably and tighten screw **2**.

8.01.02 Fitting the tilt lock

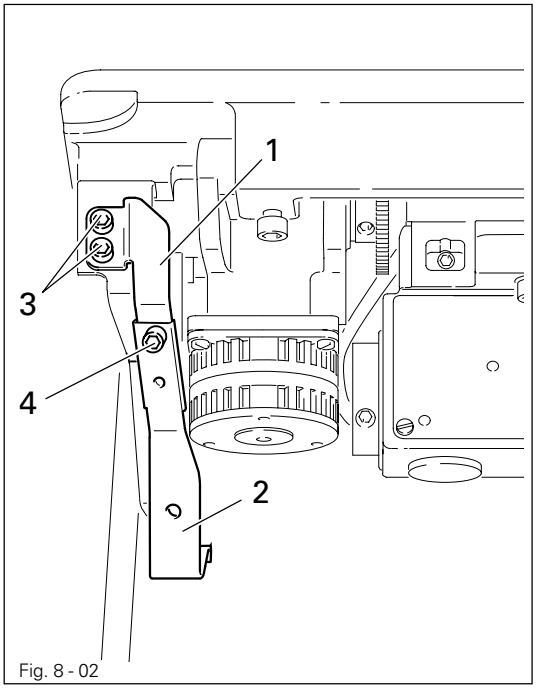

Fig. 8 - 02

- Screw on tilt lock parts **1** and **2**, provided in the accessories, using screws **3** and **4**.



Do not operate the machine without tilt lock **1**. Danger of crushing between sewing head and table top!

8.01.03 Fitting the machine cover

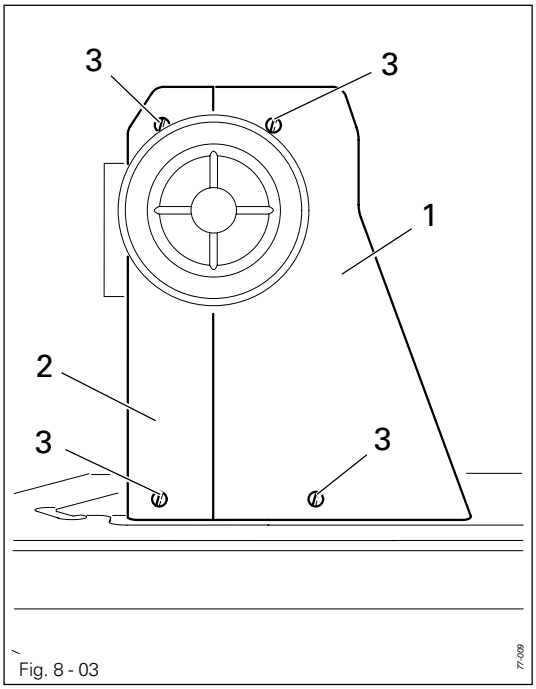

Fig. 8 - 03

- Attach the right and left cover **1** and **2** with screws **3**.

8.02 Mounting the flange motor

8.02.01 Mounting the flange motor to the bearing plate

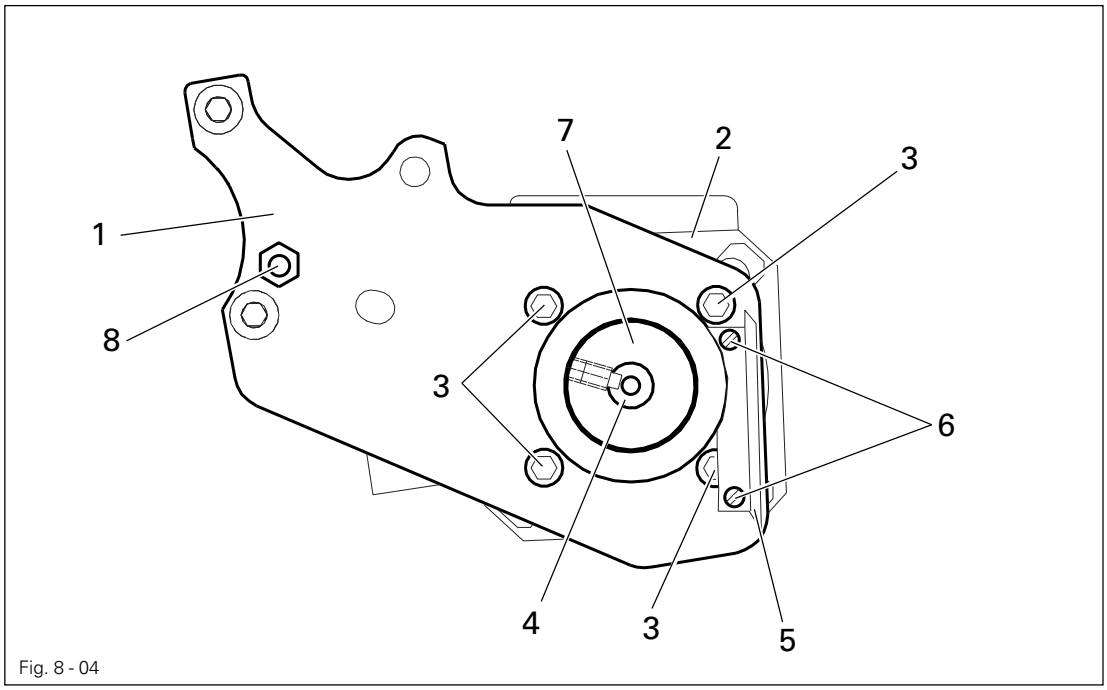

Fig. 8 - 04

- Attach bearing plate **1** to motor **2** with screws **3** as shown in **Fig. 8 - 04**.
- Remove the wedge from motor shaft **4**.
- Attach angle bracket **5** with screws **6**.
- Fit toothed belt wheel **7** to the motor shaft **4**, so that the point of the screw is located in the groove of the motor shaft.
- Screw threaded stud **8** into the bearing plate **1.**

8.02.02 Mounting the flange motor to the machine

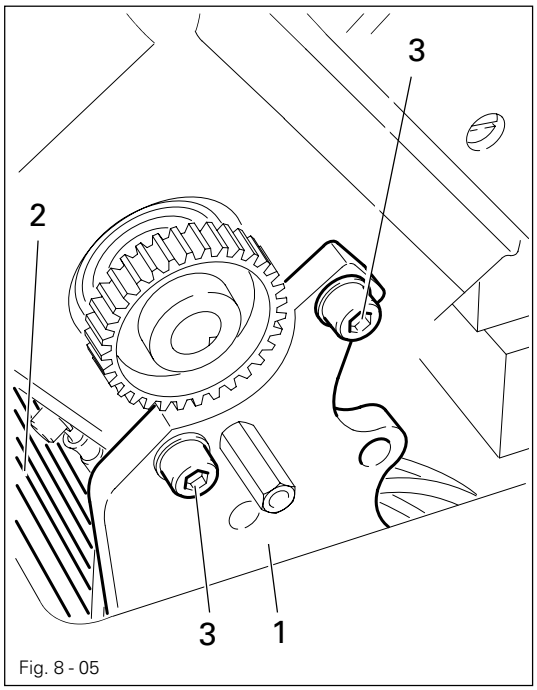

Fig. 8 - 05

- Attach bearing plate **1** of motor **2** to the machine case with screws **3** (only tighten screws **3** slightly).

8.02.03 Connecting the plug-in connections and earth cables

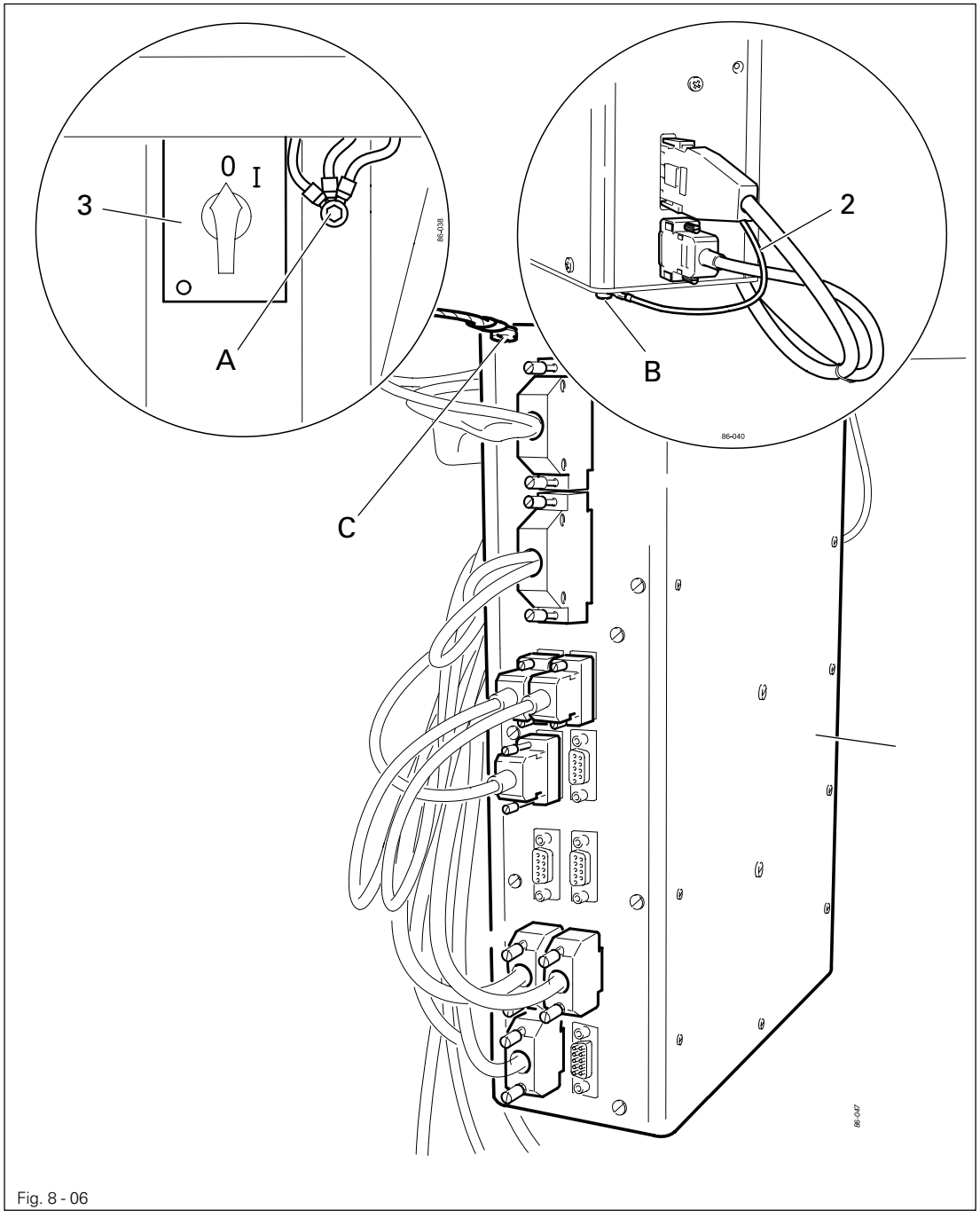

Fig. 8 - 06

- Connect all plug connections to the control box **1** as shown on their labels.
- Screw the earth cable from the sewing head to earth point **A**.
- Screw the earth cable **2** from the motor to earth point **B**.
- Connect earth point **C** and earth point **A** with an earth cable.
- Fasten the earth cable of the main switch **3** to earth point **A**.

8.02.04 Mounting the toothed belt / Basic position of the machine drive unit

- Switch on the machine.

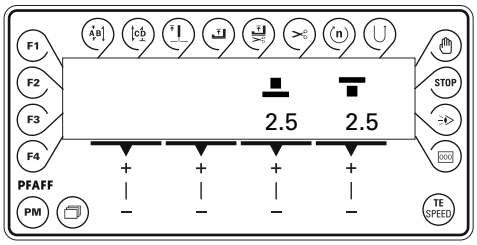

2 x TE SPEED

- Press **TE/Speed** key twice to select the input mode.

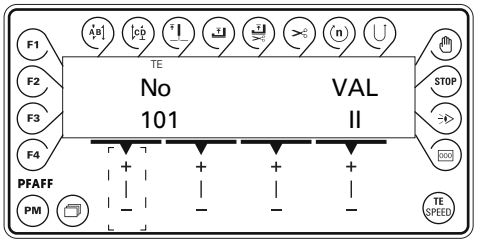

No

- Select the parameter group "600" by pressing the corresponding **+/- key.**

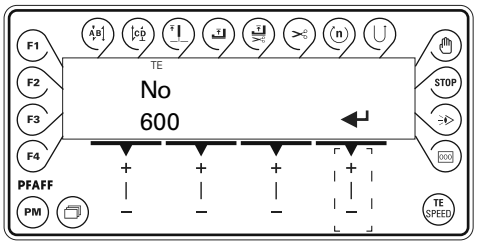

↵

- Confirm the selection by pressing the corresponding **+/- key**.
- Enter the code number, see **Chapter 9.09 Entering/changing the code number.**

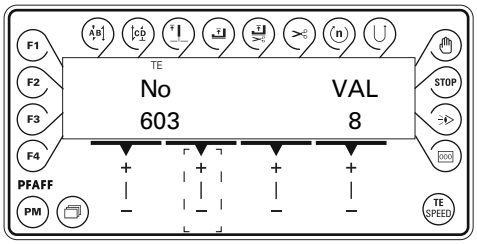

↵

- Select the parameter group "**603**" by pressing the corresponding **+/- key**.
- Turn the motor shaft by hand until value "**8**" appears in the display.
- Turn the balance wheel in sewing direction until the needle point descending from above, is level with the top edge of the needle plate.
- Taking care not to turn the motor shaft **4** (Fig. 8 - 07) or the machine, fit synchronous belt **5**.

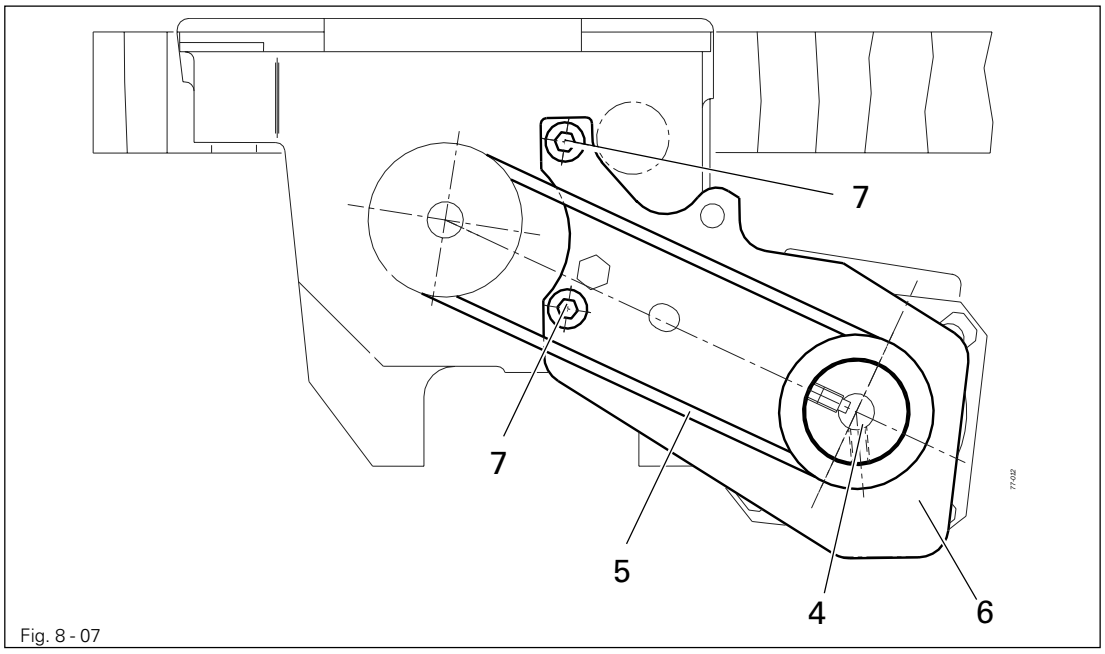

Fig. 8 - 07

- Swing the bearing plate **6** of the motor, so that the belt **5** is tightened.
- In this position tighten screws **7**.
- Turn the balance wheel in sewing direction until the needle point descending from above, is level with the top edge of the needle plate and re-check the value. A tolerance of **± 2 increments** is allowed.

TE SPEED

- Conclude the adjustment of the sewing motor by pressing the **TE/Speed** key.

8.02.05 Mounting the belt guard of the flange motor

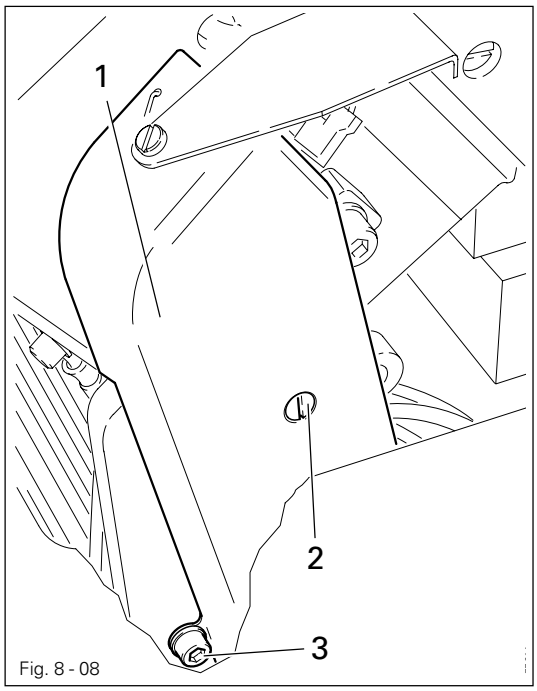

Fig. 8 - 08

- Attach belt guard **1** with screws **2** and **3**.

8.02.06 Connecting the safety switch

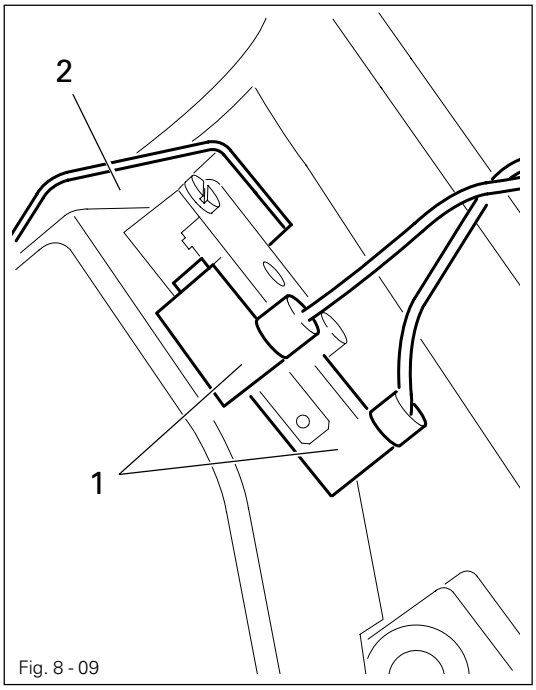

Fig. 8 - 09

- Connect plug **1** of safety switch **2** as shown in **Fig. 8-09**.

When the machine head is tilted back,the safety switch prevents the machine from starting when the main switch is on.

8.02.07 Checking the function of the start inhibitor

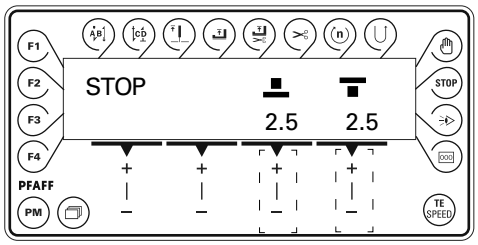

- Switch the machine on at the main switch and tilt back the sewing head.
  The error message "STOP" must appear on the control panel.
- If the message does not appear, check the setting of switch **2**.
- After the sewing head has been set upright, the machine is ready for operation again.

8.03 Mounting the spool holder

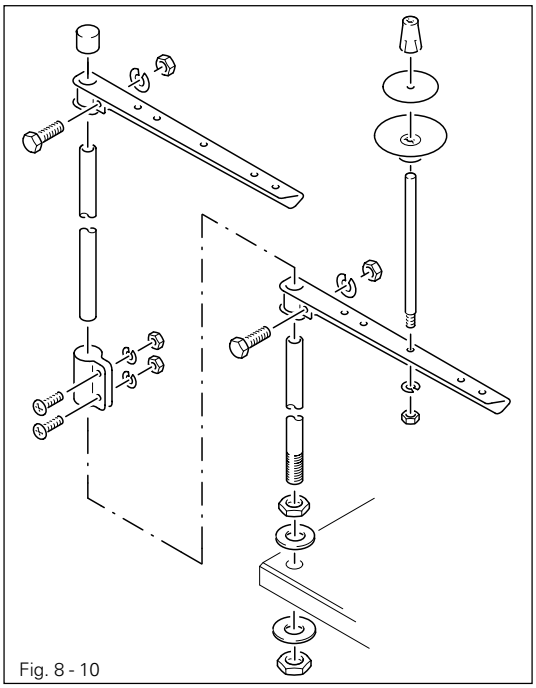

Fig. 8 - 10

- Mount the spool holder as shown in Fig. 8 - 10.
- Insert the spool holder into the hole in the table top and affix it with the nuts enclosed.

8.04 Table top cutout

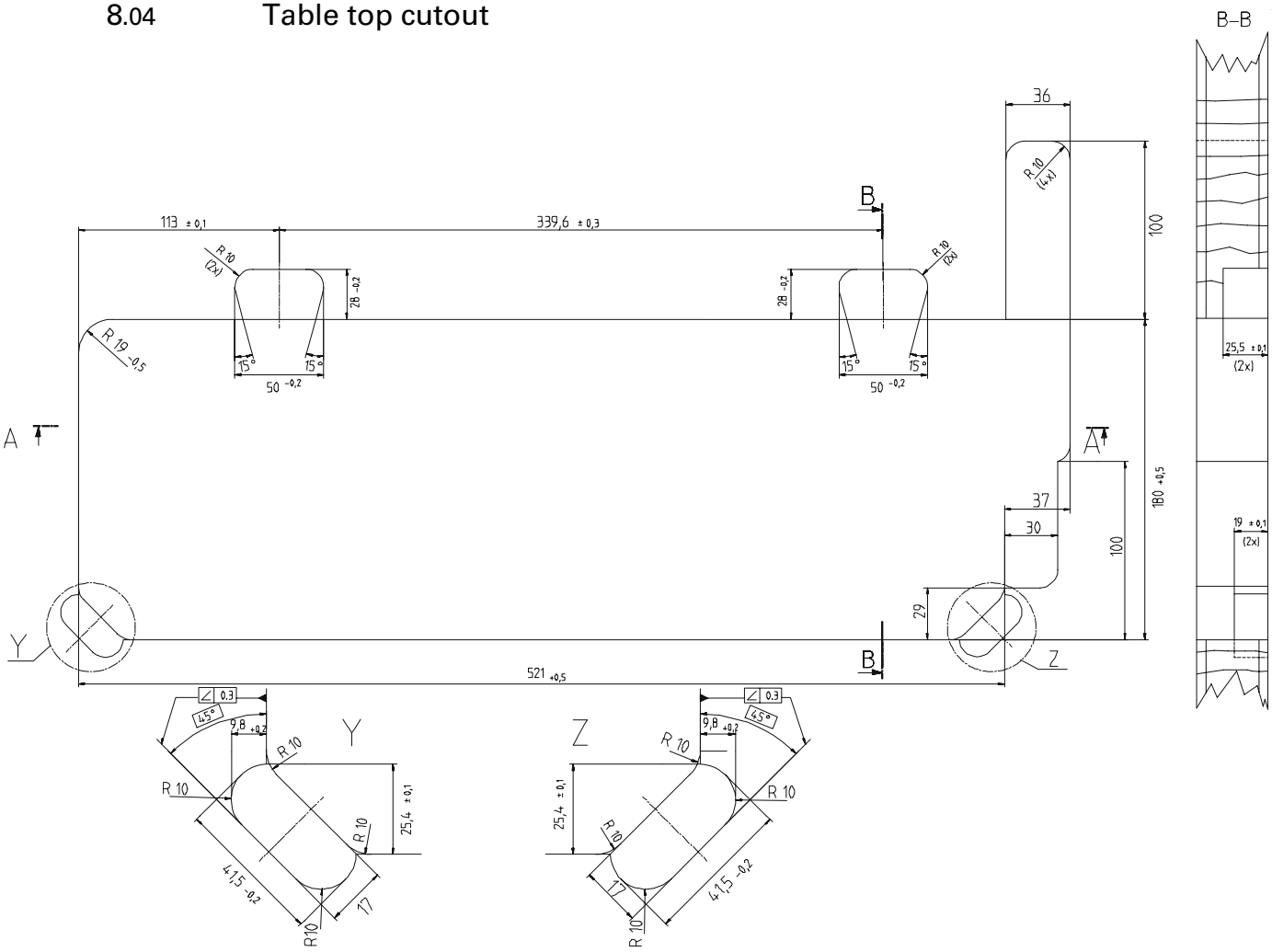

8.05 Commissioning

- Check the machine, particularly the electrical wiring, for any damage.
- Clean the machine thoroughly and then oil it or fill in oil (see **Chapter 11 Care and maintenance**).
- Have a mechanic check whether the motor of the machine can be operated with the available power supply, and that the motor is correctly connected in the junction box. If there are any discrepancies the machine **must not be operated under any circumstances.**
- Before commissioning the machine, remove grommet **1** of oil container **2**.

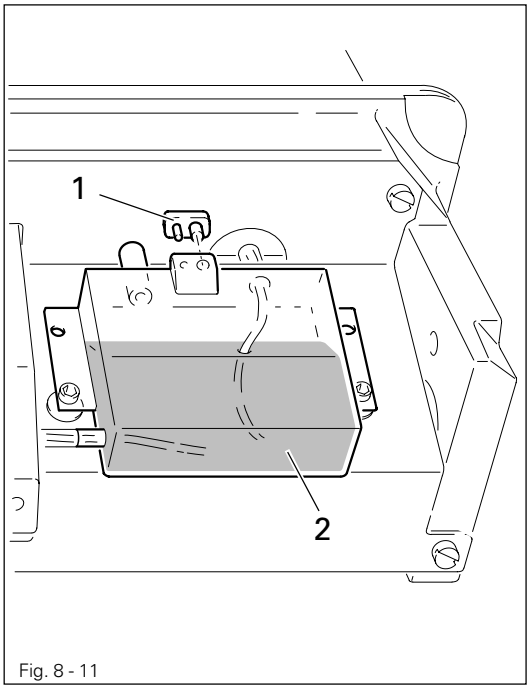

Fig. 8 - 11



Grommet **1** is only needed for support during transportation and must not be used while the machine is in operation.

8.06 Turning the machine on/off

- Turn the machine on or off, respectively (see **chapter 7.01 On/Off switch).**

9 Setting up

All regulations and instructions in this Instruction Manual are to be observed! Special attention is to be paid to the safety regulations!

All setting up work is only to be carried out by appropriately trained personnel. Before all setting up work, the machine is to be separated from the electricity supply by removing the plug from the mains or switching off the On/Off switch!

9.01 Inserting the needle

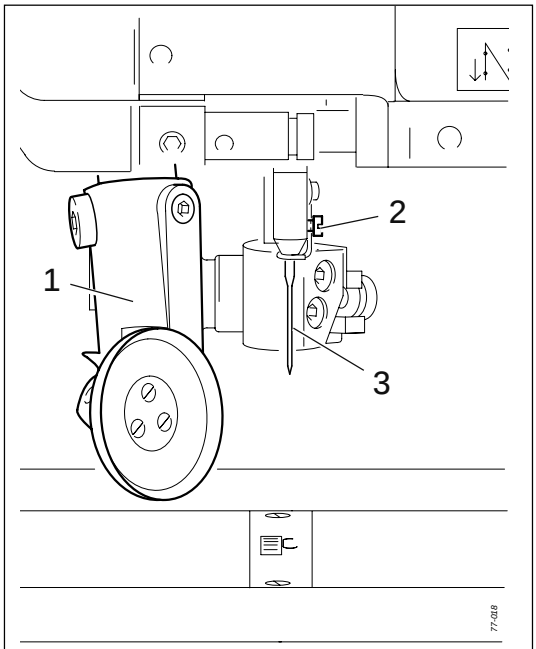

Fig. 9 - 01

Switch the machine off! Danger of injury if the machine is started accidentally!

PFAFF 521:
Only use needles of system 134.

PFAFF 1521:
Only use needles of system 134-35.

- Raise roller presser 1.
- Pull roller presser 1 downwards slightly and swing it out to the left.
- Loosen screw 2 and insert needle 3 until you feel it stop. The long groove must be facing the left.
- Tighten screw 2 and swing the roller presser back.

The choice of needle depends on the model of the machine and the thread and material used, see Chapter 3.02 Needles and threads for the PFAFF 521 or 3.03 Needles and threads for the PFAFF 1521.

9.02 Winding the bobbin thread, adjusting the thread tension

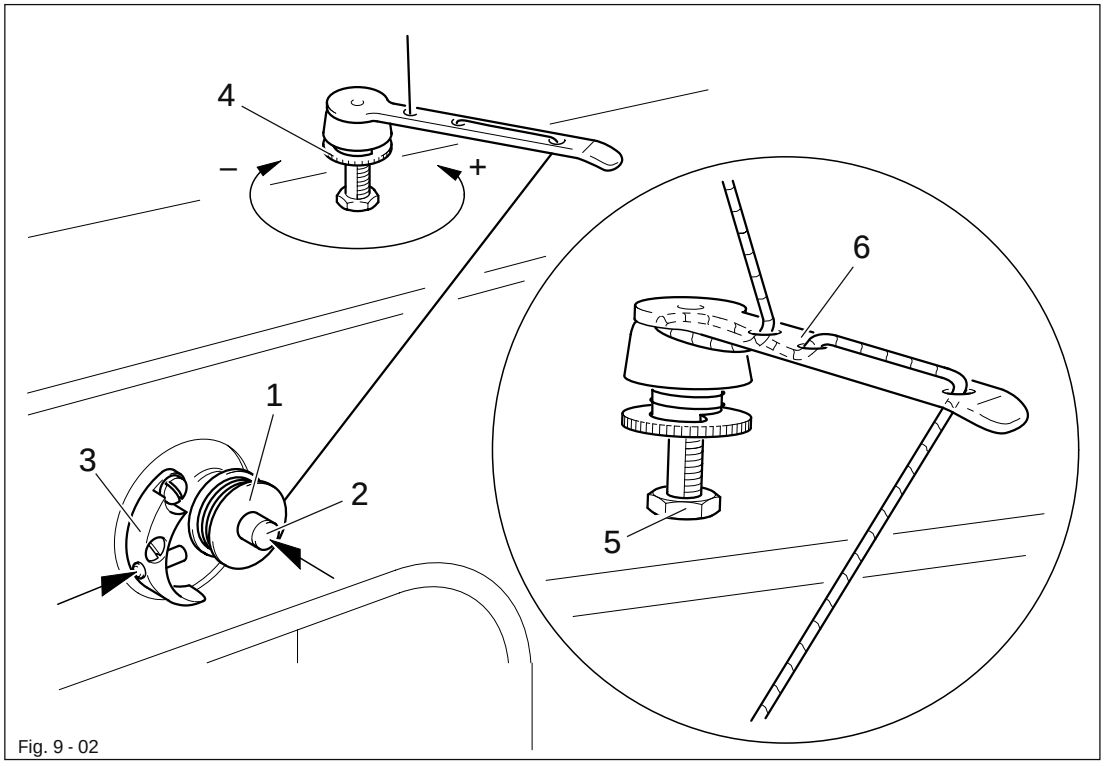

Fig. 9 - 02

- Place an empty bobbin 1 onto bobbin winder spindle 2.
- Thread the bobbin in accordance with Fig. 9 - 02 and wind it clockwise around bobbin 1 a few times.
- Switch on the bobbin winder by pressing the bobbin winder spindle 2 and lever 3 at the same time.

The bobbin fills up while you are sewing.

- The tension of the thread on bobbin 1 can be adjusted with knurled screw 4.
- The bobbin winder stops automatically when bobbin 1 is full.

If the thread is wound unevenly:

- Loosen nut 5.
- Turn thread guide 6 accordingly.
- Tighten nut 5.

9.03 Removing/inserting the bobbin case on the PFAFF 521

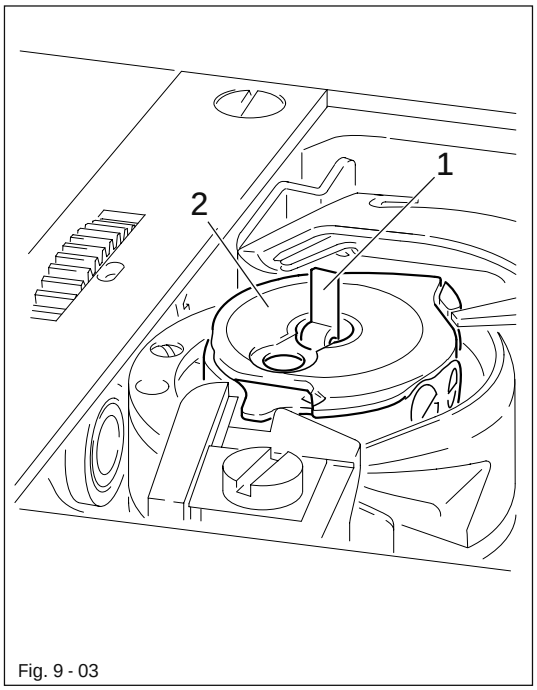

Fig. 9 - 03



Switch the machine off!
Danger of injury if the machine is started accidentally!

Removing the bobbin case:

- Open the bed plate slide.
- Raise latch 1 and remove bobbin case 2.

Inserting the bobbin case:

- Insert bobbin case 2.
- Close the latch 1 and close the bed plate slide.



Do not run the machine with the bed slide open.
Danger of injury by moving parts.

9.04 Threading the bobbin case, adjusting the bobbin thread tension on the PFAFF 521

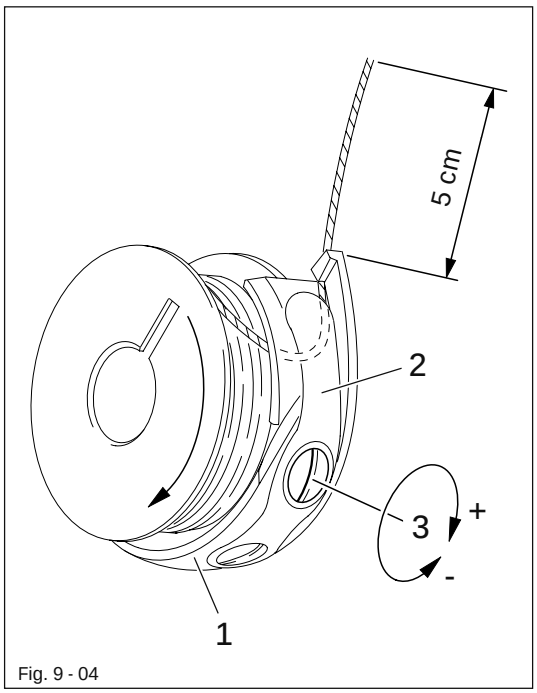

Fig. 9 - 04

- Insert the bobbin into the case 1.
- Pass the thread through the slot under spring 2.
- Pass the thread through the notch.
- Adjust the thread tension by turning screw 3.

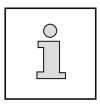

When the thread is pulled, the bobbin must rotate in the direction of the arrow.

9.05 Bobbin-changing/threading, and regulating the bobbin thread tension on the PFAFF 1521

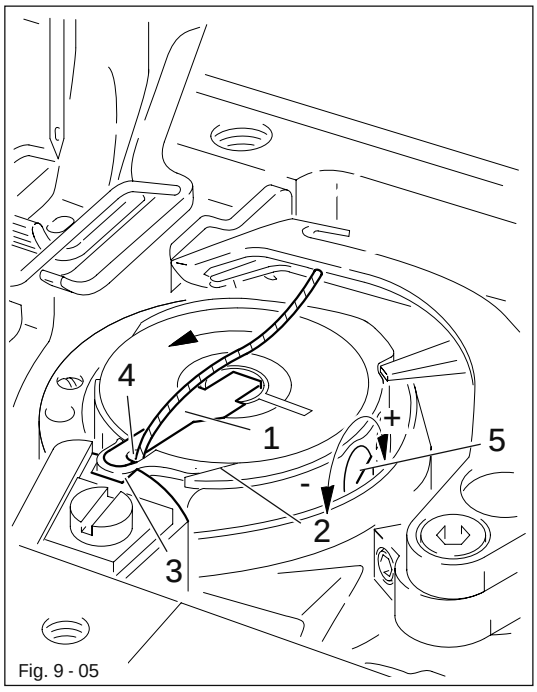

Fig. 9 - 05



Switch the machine off!
Danger of injury if the machine is started accidentally!

- Set take-up lever at its top position.
- Open bed slide, lift latch 1 and take out the bobbin. Place the filled bobbin into the hook so that the bobbin turns as shown by the arrow when the thread is pulled.
- Close latch 1 again.
- Pull the thread through slot 2, around stop 3 and into hole 4. Close the bed slide again.
- Regulate the bobbin-thread tension by turning screw 5.



Do not run the machine with the bed slide open.
Danger of injury by moving parts.

9.06 Threading the needle thread / Adjusting the needle thread tension

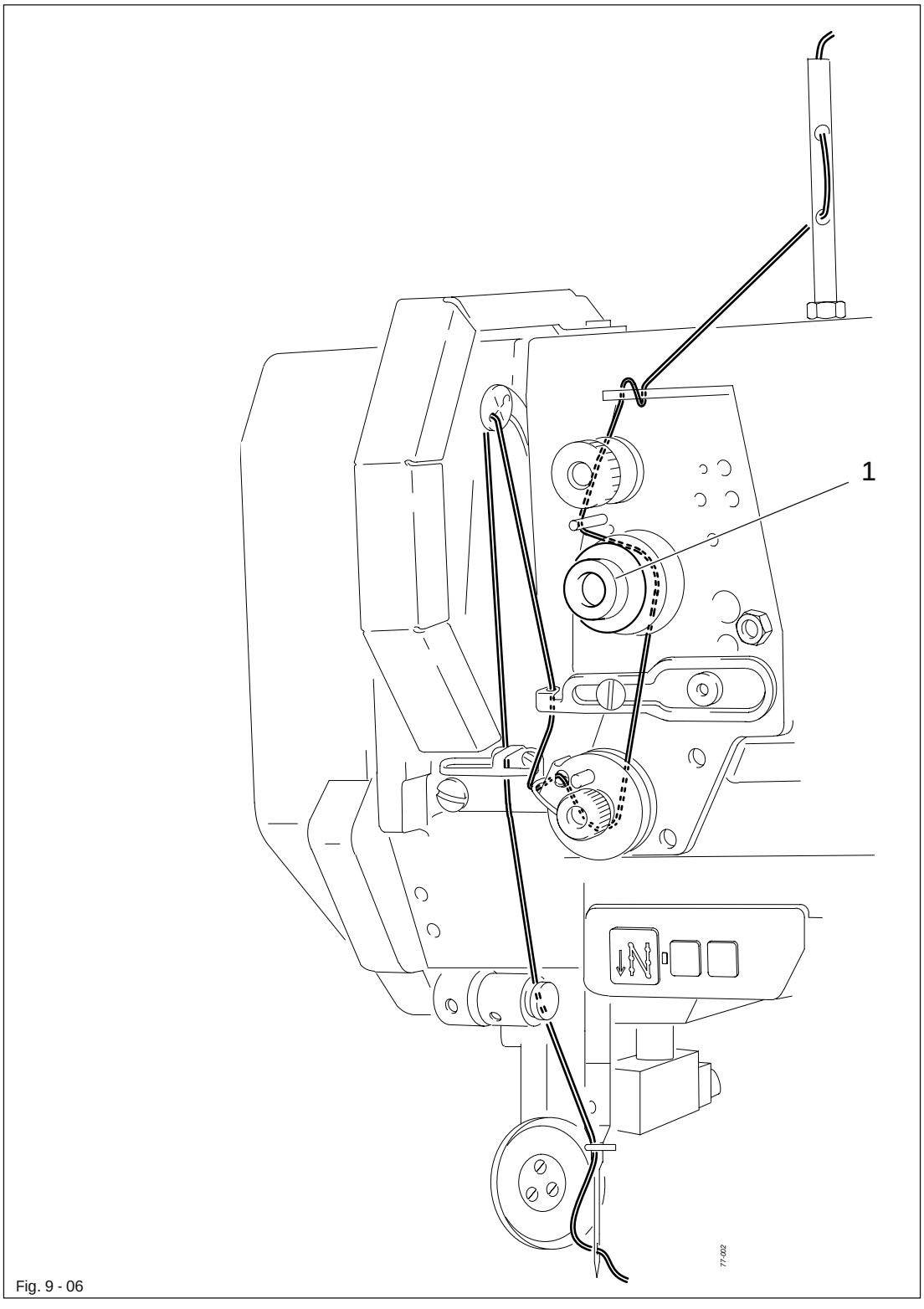

Fig. 9 - 06



Switch the machine off!
Danger of injury if the machine is started accidentally!

- Thread the machine as shown in Fig. 9 - 06.
- Adjust the needle thread tension by turning knurled screw 1.

9.07 Entering the stitch length

The stitch length is set by adjusting the feed strokes of the roller presser and the feed wheel. For the application of fullness, the feed stroke of the roller presser must be larger or smaller than the feed stroke of the feed wheel.

9.07.01 Entering the standard stitch length

- Switch on the machine.
  After the machine has been switched on the current values of the stitch lengths for roller presser and feed wheel are displayed.

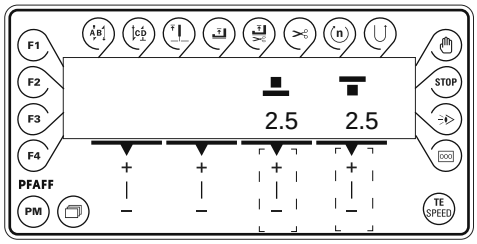

- Adjust the stitch length (feed stroke) for the roller presser by pressing the corresponding +/- key.
- Adjust the stitch length (feed stroke) for the feed wheel by pressing the corresponding +/- key.

9.07.02 Entering a second stitch length or amount of fullness

With the use of the PM key, a second stitch length or fullness setting can be set in addition to the standard stitch length. By operating the knee switch it is possible to switch from one setting to the other in the programmed sewing mode (Text "PM" on display).

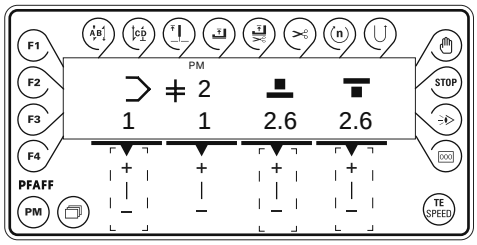

- Switch on the machine.
- Press the PM key to move into the programmed sewing mode.
- Select the program number (1 or 2) by pressing the corresponding +/- key.
- Sew 1 – 2 stitches and operate the knee switch, also see Chapter 7.04 Knee switch.
- Set the stitch length (feed stroke) for the roller presser by pressing the corresponding +/- key.
- Set the stitch length (feed stroke) for the feed wheel by pressing the corresponding +/- key.

9.08 Entering the start and end backtacks

- Switch on the machine.

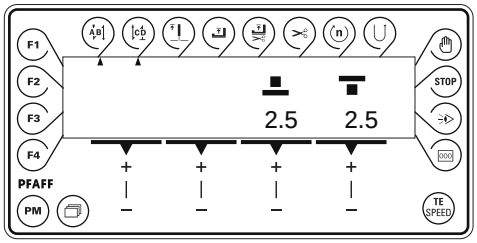

- Switch on the relevant function by pressing the Start backtack and/or End backtack keys. (Arrow appears under the corresponding function key)

- By pressing the Scroll key switch to the input menu for the start and end backtacks.

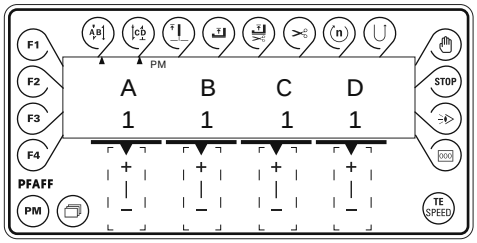

A
- By pressing the corresponding +/- key select the desired value for the number of forward stitches (A) of the start backtack.

B
- By pressing the corresponding +/- key select the desired value for the number of reverse stitches (B) of the start backtack.

C
- By pressing the corresponding +/- key select the desired value for the number of reverse stitches (C) of the end backtack.

D
- By pressing the corresponding +/- key select the desired value for the number of forward stitches (D) of the end backtack.

- Switch back to the stitch length input menu by pressing the Scroll key.

9.09 Entering/changing the code number

- Switch on the machine.

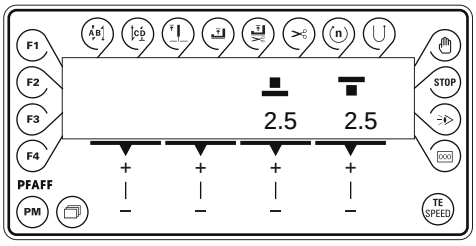

2 x TE SPEED

- Select the input mode by pressing the TE/Speed key twice.

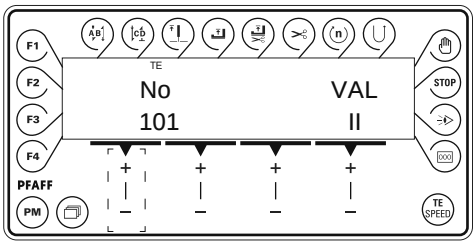

No

- By pressing the corresponding +/- key select the parameter group "800".

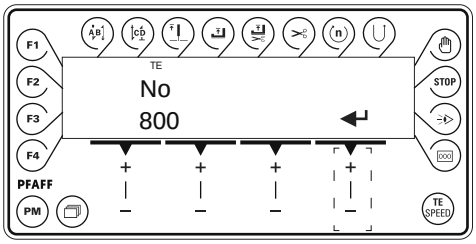

↵

- Confirm the selection by pressing the corresponding +/- key.

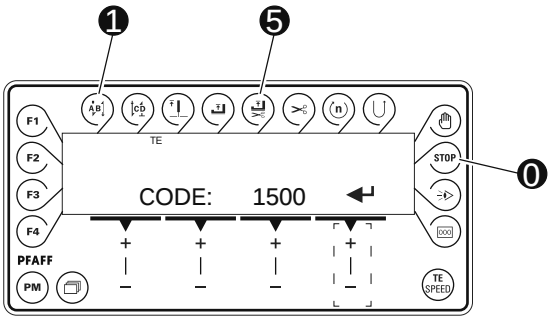

- Enter the code number by pressing the corresponding keys (factory code setting is "1500"), also see Chapter 7.09.02 Key functions.

↵

- Conclude code input by pressing the corresponding +/- key.

The code input is stored until the machine is switched off at the main switch. As long as the machine is not switched off, there is free access to all parameters without having to enter the code number again.

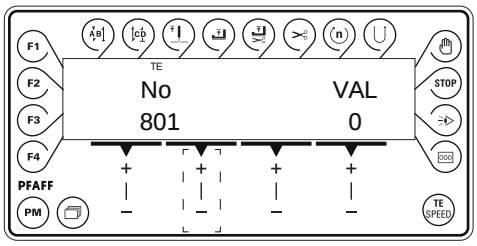

No ● By pressing the corresponding +/- key select the parameter "810".

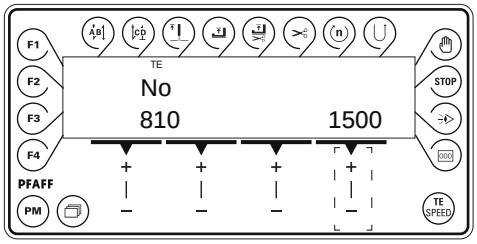

↵ ● Confirm the selection by pressing the corresponding +/- key.

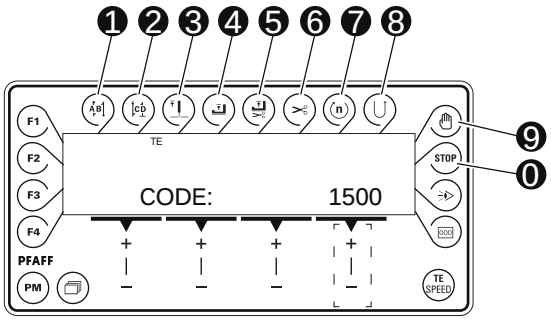

● Enter the desired code by pressing the corresponding keys, also see Chapter 7.09.02 Key functions.

↵ ● Conclude the input by pressing the corresponding +/- key, through which the new code number is stored and the sewing mode selected.

9.10 Setting the stitch count function
(on machines with bobbin thread control by stitch counting)

- Switch on the machine.

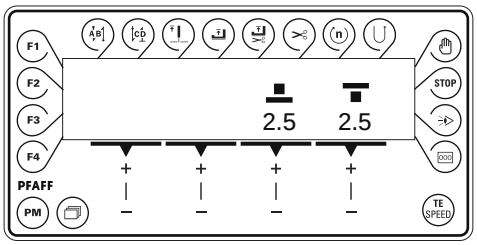

2 x TE SPEED

- Select the input mode by pressing the **TE/Speed** key twice.

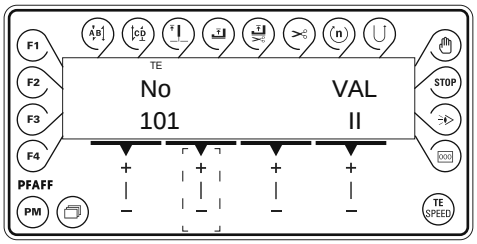

No

- By pressing the corresponding **+/- key** select the parameter "105".

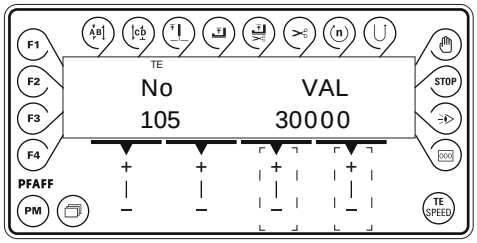

↵

- Set the number of stitches to be sewn with one bobbin by pressing the corresponding **+/- keys**.

TE SPEED

- Conclude the input by pressing the **TE/Speed** key. The value entered is then stored and the sewing mode selected.



To activate the stitch count function the value of parameter "104" must be set at "1".

9.11 Setting the stitch count function
(on machines with bobbin thread supply monitor -926/06)

- Switch on the machine.

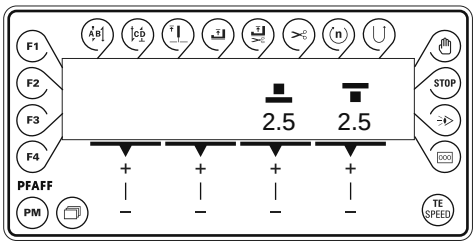

2 x TE SPEED

- Select the input mode by pressing the TE/Speed key twice.

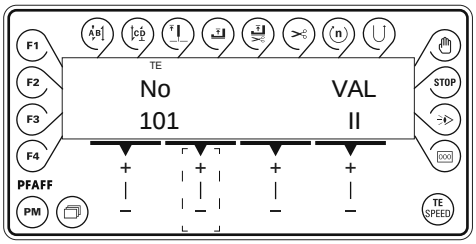

No

- By pressing the corresponding +/- key select the parameter "106".

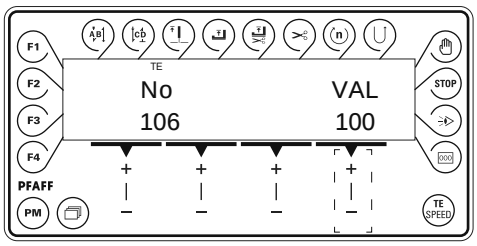

↵

- Set the number of remaining stitches, which can still be sewn according to the bobbin thread supply monitor (depends on the thread size) by pressing the corresponding +/- key.

TE SPEED

- Conclude the input by pressing the TE/Speed key. The value entered is then stored and the sewing mode selected.

To activate the bobbin thread supply monitor the value of parameter "104" must be set at "2".

10 Sewing

In the sewing mode all settings relating to the sewing operation are shown on the display. Functions can be switched on and off by pressing a key. Values for start backtacks and end backtacks or stitch placement can be changed directly.
In this mode a difference is made between manual sewing and programmed sewing.
The change from manual to programmed sewing is effected by pressed the PM key. In programmed sewing the text "PM" appears on the display. Under the program numbers 1 – 2, fixed programs are deposited, which are programmed in the machine memory. The program numbers 3 – 99 can be used for free programming of seams.

10.01 Manual sewing

After the machine has been switched on (Chapter 7.01 Main switch) and manual sewing has been selected with the PM key, the display appears for entering the stitch length, also see Chapter 9.07 Entering the stitch length.

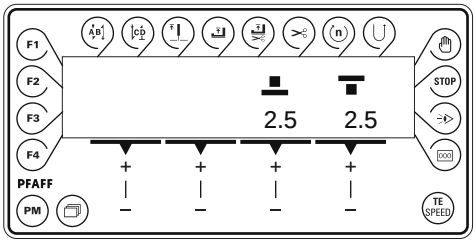

When the bartacking function is switched on, the display appears for entering the bartack values, also see Chapter 9.08 Entering bartacks.
It is possible to switch from one display to another by pressing the Scroll key.

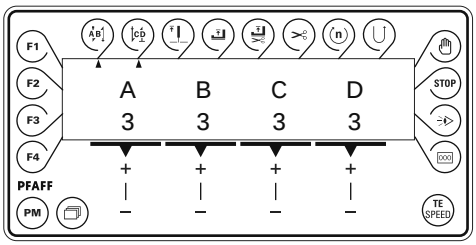

Other manual sewing functions, also see Chapter 7.09.02 Function keys:

F1	Stitch placement function on/off		Raised needle position on/off
F4	Backtack suppression		Raised roller presser on/off
	Start backtack on/off		Raised roller presser after thread trimming on/off
	End backtack on/off		Thread trimming on/off

Sewing ensues with pedal functions, see Chapter 7.03 Pedal.

10.02 Programmed sewing

In the programmed sewing mode a difference is made between fixed programs (program numbers 1 and 2) and freely programmable seam programs (program numbers 3-99). The fixed programs are used for the quick and easy production of seams with different stitch lengths or amounts of fullness. With the knee switch function it is possible to move to each of the 2 or 3 seams sections, also see Chapter 7.04 Knee switch. The fixed programs are designed as cyclic running programs and are terminated with the pedal function, also see Chapter 7.03 Pedal.

The freely programmable seam programs (program numbers 3 – 99) can be entered, changed or deleted as required, see Chapter 11 Input.



After the machine has been switched on (Chapter 7.01 Main switch) and programmed sewing has been selected with the PM key, the display appears for selecting the program number, seam section and stitch length.

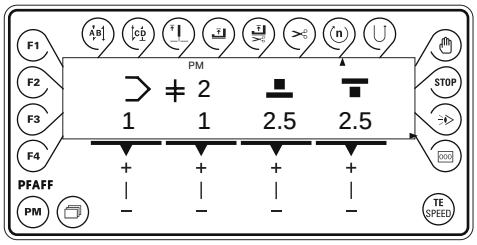



If other functions, such as backtack function, maximum seam section speed or stitch counting are activated, the Scroll key can be used to switch to other displays for entering the corresponding values, e.g. to display the value for seam section speed and stitch counting.

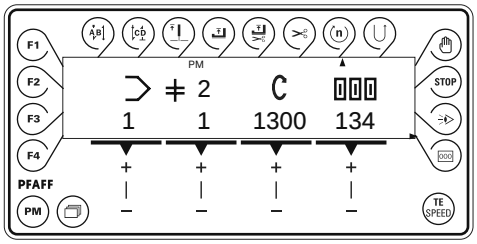

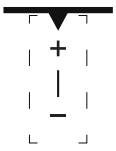

The values can be entered by pressing the corresponding +/- key.

Other programmed sewing functions, also see Chapter 7.09.02 Function keys:

F1	Stitch placement function on/off		Raised roller presser after thread trimming on/off
F3	Knee switch function on/off		Thread trimming on/off
F4	Backtack suppression		Seam section speed on/off
	Start backtack on/off		Reverse sewing direction on/off
	End backtack on/off		Program interruption
	Raised needle position on/off	STOP	Programmed stop on/off
	Raised roller presser on/off		Sensor on/off
		000	Stitch counting on/off

If in the seam to be sewn either the F3, the sensor or the stitch counting function is activated, the seam section must be finished by operating the pedal in reverse.

Sewing ensues with pedal functions, see Chapter 7.03 Pedal.

10.03 Program interruption

If a seam program sequence is interrupted (e.g. due to thread breakage), the program interruption function must be selected.

- After the program interruption key has been pressed, the seam program sequence is interrupted. It is possible to continue sewing manually, in which case the stitch length values are taken over from the current seam program.

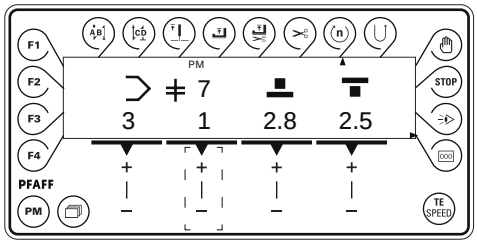

- With the corresponding +/- key it is possible to select the seam section, in which the seam program is to be continued.

- By pressing the program interruption key again, the program enters the selected seam section and the programmed sewing is continued.

10.04 Error messages

If an error occurs, the text "ERROR" appears on the display, together with an error code and short instructions. An error message is caused by incorrect settings, defective elements or seam programs and by overload conditions. For an explanation of the error codes see Chapter 13.08 Explanation of the error messages.

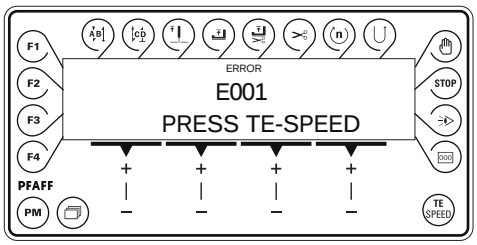

- Eliminate the error.



- Confirm error elimination by pressing the TE/Speed key.

11 Input

11.01 Summary of the functions in the input mode

2x TE SPEED The input mode is selected by pressing the TE/Speed key twice. In the input mode a difference is made between parameter input and seam program input.

PM After selecting the input mode, use the PM key to move into the seam program input.

11.01.01 Summary of the parameter functions

2x TE SPEED

+ / – Select the parameter group (corresponding +/- key)

- 100 Operator level
- 200 Technician level
- 300 Sewing motor positions
- 400 Times
- 500 Counters and speeds
- 600 Service
- 700 Sewing motor
- 800 Rights of access

PM Selecting the seam program input, see Chapter 11.01.02 Summary of the seam program inputs

For a more detailed explanation of the parameter functions, see Chapter 13.07 Parameter settings.

11.01.02 Summary of the seam program inputs

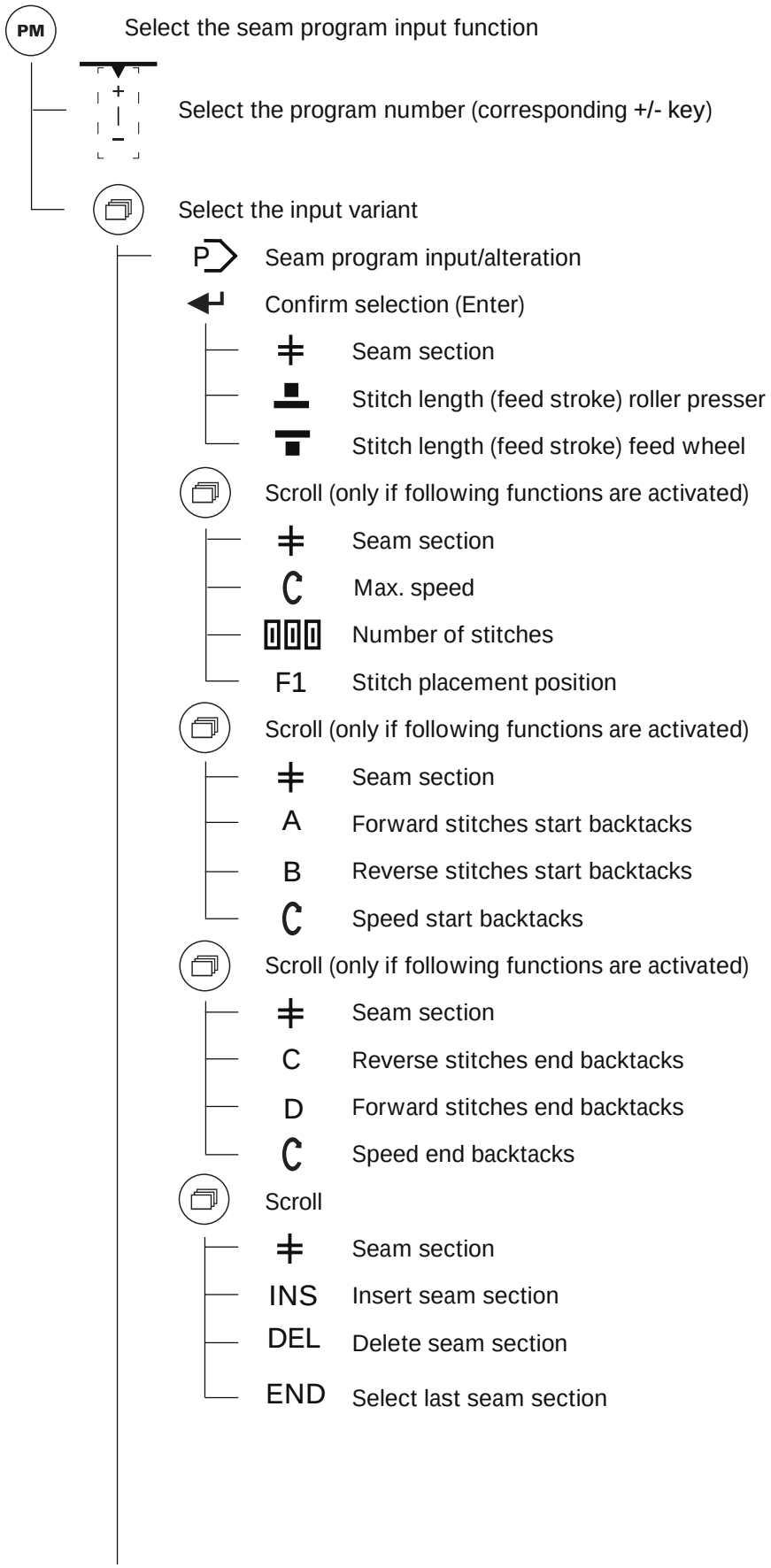

- Select the input variant
  - T — Seam input with Teach In
  - Confirm selection (Enter)
    - Seam section
    - Stitch length (feed stroke) roller presser
    - Stitch length (feed stroke) feed wheel
  - Scroll (only if following functions are activated)
    - Seam section
    - Max. speed
    - F1 — Stitch placement position
  - Scroll (only if following functions are activated)
    - Seam section
    - A — Forward stitches start backtacks
    - B — Reverse stitches start backtacks
    - Speed start backtacks
  - Scroll (only if following functions are activated)
    - Seam section
    - C — Reverse stitches end backtacks
    - D — Forward stitches end backtacks
    - Speed end backtacks
  - After operating the pedal
    - Seam section
    - Number of stitches sewn
    - END — Select last seam section
- Select input variant
  - DEL — Delete seam programs

For the explanation of other functions see Chapter 7.09.02 Function keys.

11.02 Seam program input variants

To enter, change or delete seam programs there are basically three possible input variants

- Seam program input/alteration (input of values),
- Seam input with Teach In and
- Deleting seam programs.

The required input variant is selected as follows:

- Switch on the machine

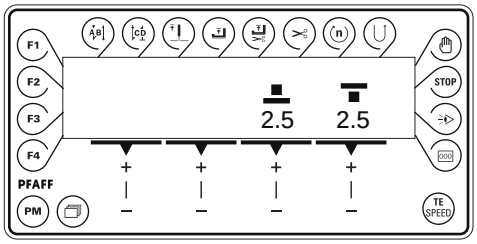

2x TE SPEED

- Select input mode by pressing TE/Speed key twice.

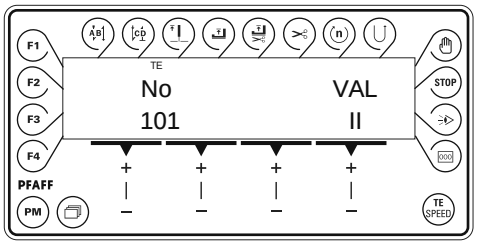

PM

- Press PM to select the seam program input function.
- Enter the code number, see Chapter 9.09 Entering/changing the code number.

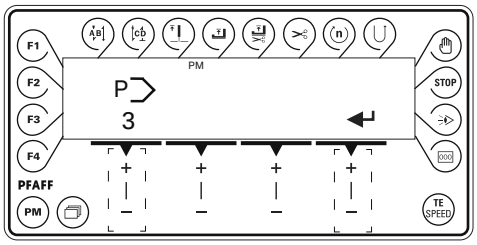

- Select the required program number with the corresponding +/- key.

- Select the required input variant with the Scroll key.

- Confirm the selection made with the corresponding +/- key.

TE SPEED

- Carry out the desired inputs and then conclude the seam program input by pressing the TE/speed key.

11.03 Altering existing seam programs

The following description assumes that a seam program with all the necessary parameters has already been created.

- Switch on the machine.
- Select the input variant "seam program input/alteration", see Chapter 11.02 Seam program input variants.

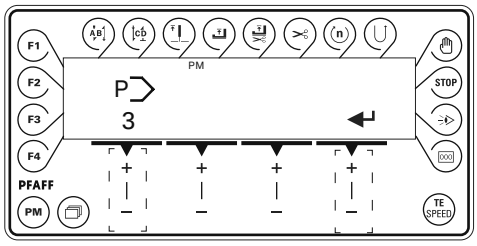

- Select the desired program number with the corresponding +/- key.

- After confirming the selection by pressing the corresponding +/- key, the first of up to five input menus appears, in which the parameters of the selected program can be altered as described below.

Each of the five input menus can be selected individually by pressing the Scroll key. Only the input menus of activated functions are displayed. To return to the program selection menu, press the PM key.

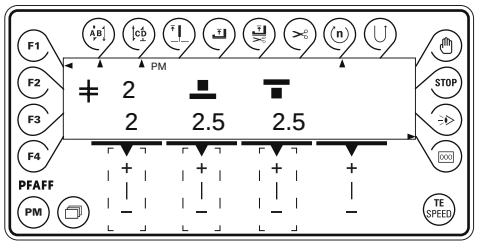

- Select the desired seam section by pressing the corresponding +/- key.

- Select the desired value for the stitch length of the roller presser by pressing the corresponding +/- key.

- Select the desired value for the stitch length of the feed wheel by pressing the corresponding +/- key.

- Press the Scroll key to select the next input menu.

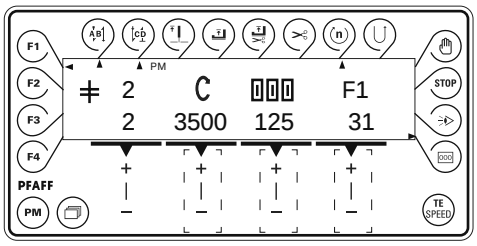

To achieve the illustrated input menu, the following functions must be activated:

F1 F1 (Placement stitch) – and/or

n Speed (speed limitation) – and/or

000 Stitch count.

C ● Select the desired speed value for the current seam section by pressing the corresponding +/- key.

000 ● Select the desired speed value for the number of stitches in the current seam section by pressing the corresponding +/- key.

F1 ● Set the stitch placement position by turning the balance wheel or by pressing the corresponding +/- key.

● Select the next input menu by pressing the Scroll key.

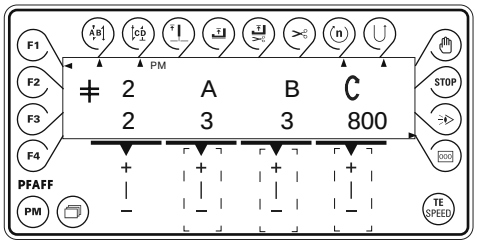

AB This input menu can only be selected if the start backtack function is activated.

A ● By pressing the corresponding +/- key select the desired value for the number of forward stitches (A) of the start backtack for the current seam section.

B ● By pressing the corresponding +/- key select the desired value for the number of reverse stitches (B) of the start backtack for the current seam section.

C ● By pressing the corresponding +/- key select the desired value for the start backtack speed of the current seam section. In parameter 101 it is possible to stipulate whether the start backtack is sewn with a fixed speed or dependent on the pedal.

● Select the next input menu by pressing the Scroll key.

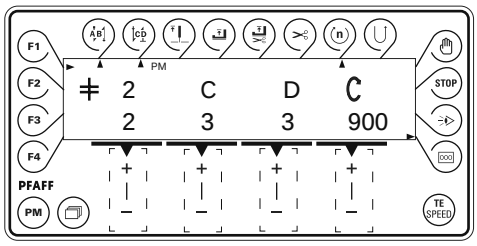

This input menu can only be selected if the end backtack function is activated.

C
- By pressing the corresponding +/- key select the desired value for the number of reverse stitches (C) of the end backtack for the current seam section.

D
- By pressing the corresponding +/- key select the desired value for the number of forward stitches (D) of the end backtack for the current seam section.

C
- By pressing the corresponding +/- key select the desired value for the end backtack speed of the current seam section.

- Select the next input menu by pressing the Scroll key.

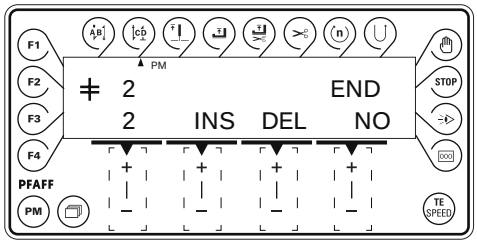

INS
- By pressing the corresponding +/- key a new seam section is inserted.

DEL
- By pressing the corresponding +/- key the current seam section is deleted.

END
- By pressing the corresponding +/- key it is possible to stipulate whether the selected seam section is the last one in the program ("YES") or whether another seam section should be added ("NO").

- By pressing the Scroll key, the first input menu is selected again
or
change to programmed sewing by pressing the TE/Speed key. In this case the values entered are stored.

11.04 Deleting seam programs

- Switch on the machine

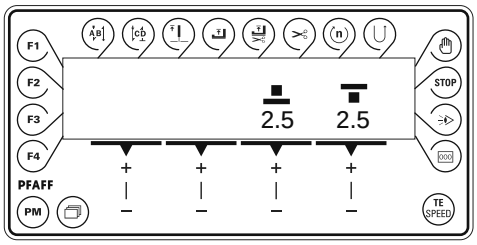

2x TE SPEED

- Select input mode by pressing TE/Speed key twice.

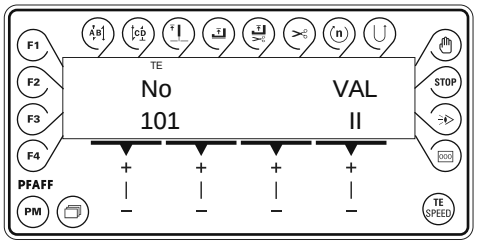

PM

- Press PM to select the seam program input function.
- Enter the code number, see Chapter 9.09 Entering/changing the code number.

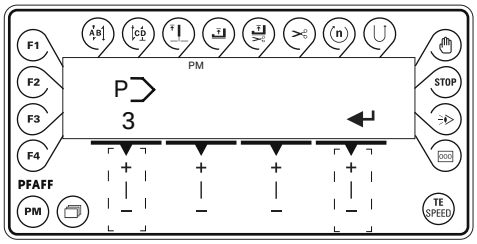

- Select the required program number with the corresponding +/- key.

- Select the input variant "Deleting seam programs" with the Scroll key, see Chapter 11.02 Seam program input variants.

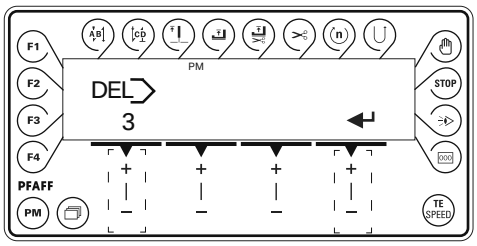

- Confirm the deletion of the program with the corresponding +/- key.

TE SPEED

- Conclude the seam program input by pressing the TE/speed key.

11.05 Seam programming examples

The procedure for creating seam programs using the seam program input function and the Teach In function is described below with the help of examples.

The display settings shown in the examples only appear like this if no seam program has been entered under the selected program number.

11.05.01 An example for seam program input

The seam to be programmed should
- have 5 seam sections
- be stored under program number 7.

- Switch on the machine

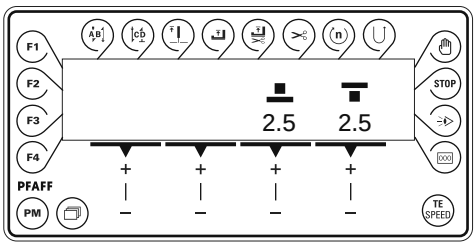

2x TE SPEED
- Select input mode by pressing TE/Speed key twice.

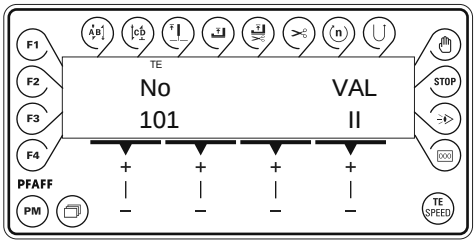

PM
- Press PM to select the seam program input function.
- Enter the code number, see Chapter 9.09 Entering/changing the code number.

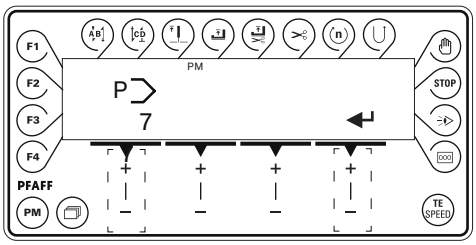

- Select the program number "7" with the corresponding +/- key.

- Confirm the selection made with the corresponding +/- key.
- The display changes for the input of the first seam section.

The first seam section should have
- a double start backtack (2 forward and 2 reverse stitches)
- backtack speed of 700 spm
- stitch count (5 stitches)
- a 3.5 mm stitch length (for roller presser and feed wheel).

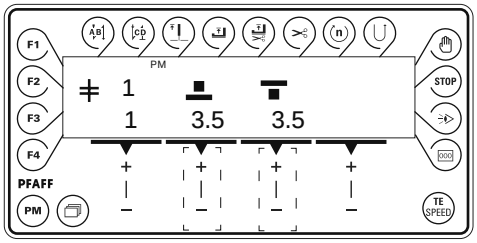

- By pressing the corresponding +/- key set the stitch length for the roller presser at "3.5".

- By pressing the corresponding +/- key set the stitch length for the feed wheel at "3.5".

- By pressing the start backtack key, switch on the corresponding function.
  The display changes for the input of the start backtack values.

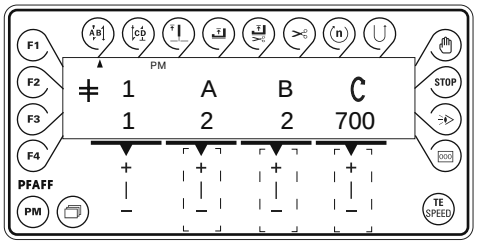

A
- By pressing the corresponding +/- key set the number of forward stitches at "2 ".

B
- By pressing the corresponding +/- key set the number of reverse stitches at "2 ".

C
- By pressing the corresponding +/- key set the backtack speed at "700".

- By pressing the stitch count key, switch on the corresponding function.
  The display changes for the input of the number of stitches.
- If the stitch count function is already switched on, change by pressing the Scroll key.

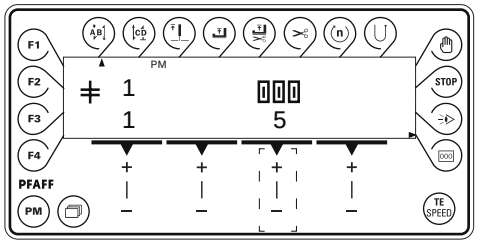

- By pressing the corresponding +/- key set the number of stitches at"5".

● By pressing the Scroll key, select the following display on the screen.

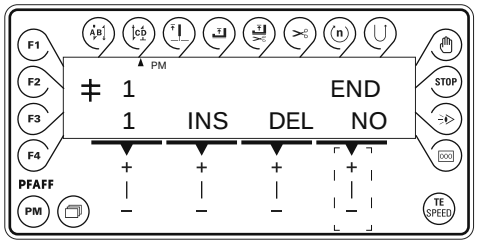

END ● By pressing the corresponding +/- key select "NO" to add further seam sections.

● By pressing "+" on the corresponding +/- key change to the second seam section.

In the second seam section
- the stitch length (for roller presser and feed wheel) should be 2.5 mm
- and a stitch count should be carried out (1 stitch).

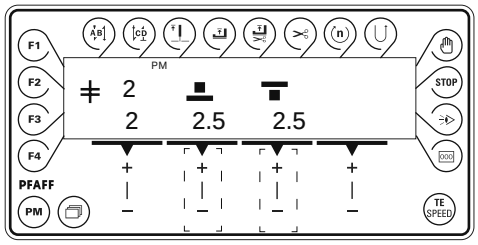

● By pressing the corresponding +/- key set the stitch length for the roller presser at "2.5 ".

● By pressing the corresponding +/- key set the stitch length for the feed wheel at "2.5".

● By pressing the stitch count key, switch on the corresponding function.
The display changes for the input of the number of stitches.

● If the stitch count function is already switched on, change by pressing the Scroll key.

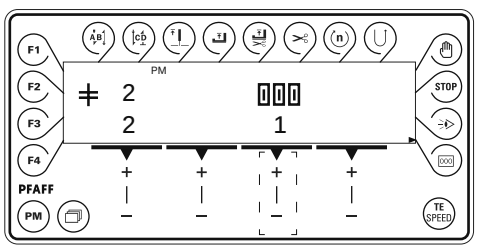

● By pressing the corresponding +/- key set the number of stitches at "1".

- By pressing "+" on the corresponding +/- key change to the third seam section.

In the third seam section
- the stitch length (for roller presser and feed wheel) should be 3 mm
- a stitch count should be carried out (2 stitches),
- and the seam should be sewn in reverse.

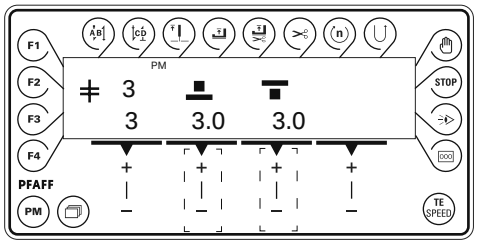

- By pressing the corresponding +/- key set the stitch length for the roller presser at "3.0 ".

- By pressing the corresponding +/- key set the stitch length for the feed wheel at "3.0".

- By pressing the stitch count key, switch on the corresponding function. The display changes for the input of the number of stitches.

- If the stitch count function is already switched on, change by pressing the Scroll key.

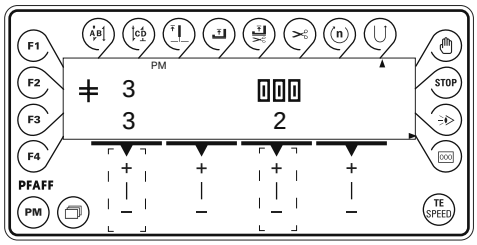

- By pressing the corresponding +/- key set the number of stitches at "2".

- By pressing the corresponding key, switch on the reverse sewing function.

- By pressing "+" on the corresponding +/- key change to the fourth seam section.

In the fourth seam section
- the stitch length (for roller presser and feed wheel) should be 5 mm
- a stitch count should be carried out (1 stitch).

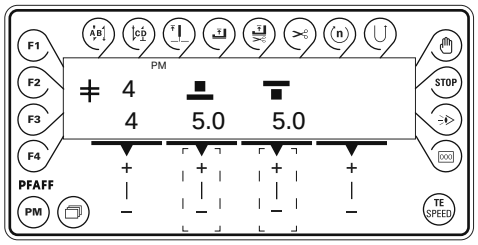

- By pressing the corresponding +/- key set the stitch length for the roller presser at "5.0 ".

- By pressing the corresponding +/- key set the stitch length for the feed wheel at "5.0".

- By pressing the stitch count key, switch on the corresponding function. The display changes for the input of the number of stitches.

- If the stitch count function is already switched on, change by pressing the Scroll key.

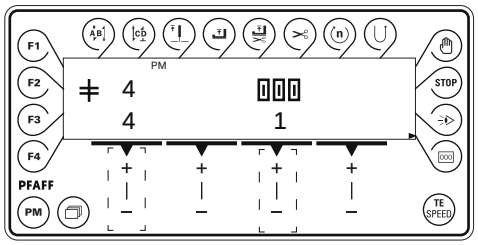

- By pressing the corresponding +/- key set the number of stitches at "1".

- By pressing "+" on the corresponding +/- key change to the fifth seam section.

The fifth seam section should have
- a double end backtack
- a 5 mm stitch length (for roller presser and feed wheel)
- backtack speed of 700 spm
- a stitch count (1 stitch)
- and the thread trimming function at the end of the seam section.

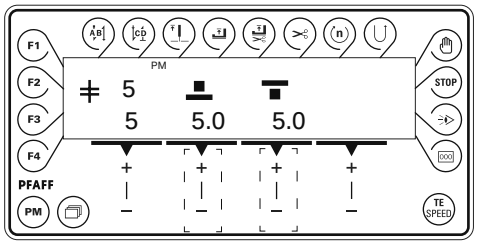

- By pressing the corresponding +/- key set the stitch length for the roller presser at "5.0 ".

- By pressing the corresponding +/- key set the stitch length for the feed wheel at "5.0".

By pressing the end backtack key, switch on the corresponding function.
The display changes for the input of the number of stitches for the end backtack

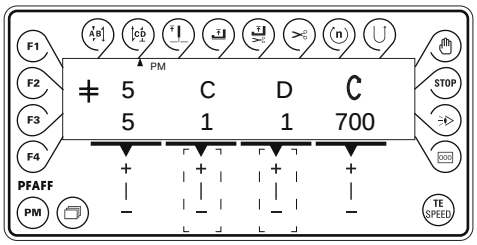

C
- By pressing the corresponding +/- key set the number of reverse stitches at "1".

D
- By pressing the corresponding +/- key set the number of forward stitches at "1".

- By pressing the corresponding +/- key set the backtack speed at "700".

- By pressing the stitch count key, switch on the corresponding function.
The display changes for the input of the number of stitches.

- If the stitch count function is already switched on, change by pressing the Scroll key.

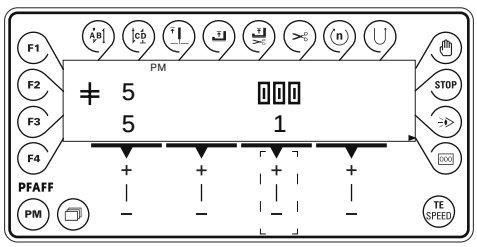



- By pressing the corresponding +/- key set the number of stitches at "1".



- By pressing the thread trimming key, switch on the corresponding function for the seam section end.



- By pressing the Scroll key, select the following screen display.

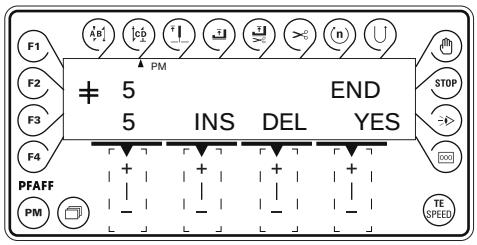

END

- By pressing the corresponding +/- key select "YES" to conclude the seam input.



- By pressing the TE/Speed key the selected values are taken over and the program changes into the programmed sewing mode.

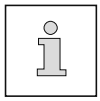

If no end of seam section function is activated, the end of the seam section can be set with the pedal function, see Chapter 7.03 Pedal.

11.05.02 Seam input example using the Teach In method

The seam to be programmed should
- have 3 seam sections
- and be stored under program number 8.

- Switch on the machine

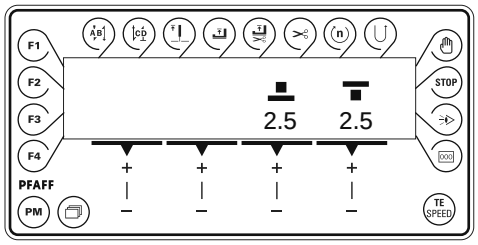

2x TE SPEED
- Select input mode by pressing TE/Speed key twice.

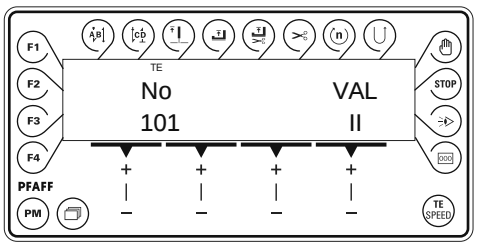

PM
- Press PM to select the seam program input function.
- Enter the code number, see Chapter 9.09 Entering/changing the code number.

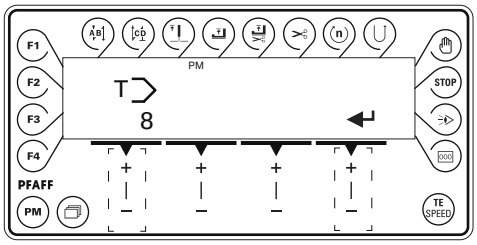

- By pressing the Scroll key, select the input variant "Seam input with Teach In", see Chapter 11.02 Seam program input variants.
- Select the program number "8" with the corresponding +/- key.
- Confirm the selection made with the corresponding +/- key.
  The display changes for the input of the first seam section.

The first seam section should have
- the knee switch function at the end of the seam section
- and a 2.8 mm stitch length (for roller presser and feed wheel).

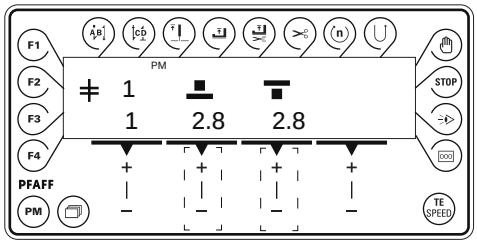

- By pressing the corresponding +/- key set the stitch length for the roller presser at "2.8 ".

- By pressing the corresponding +/- key set the stitch length for the feed wheel at "2.8".

- Sew the first seam section manually.

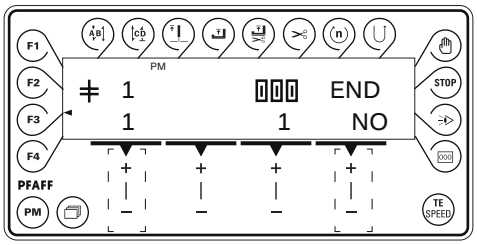

F3

- After the machine has stopped the seam section end must be entered.
  By pressing the knee switch or the F3 key, switch on the end of section with knee switch function.

END

- After sewing the section press "NO" on the corresponding +/- key, to enable the input of more seam sections.

- By pressing "+" on the corresponding +/- key change to the second seam section.

The second seam section should have
- the knee switch function at the end of the seam section
- and a 2.4 mm stitch length (for roller presser and feed wheel).

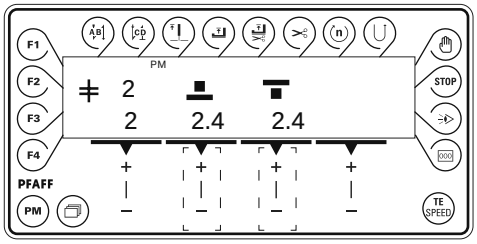

- By pressing the corresponding +/- key set the stitch length for the roller presser at "2.4 ".

- By pressing the corresponding +/- key set the stitch length for the feed wheel at "2.4".

- Sew the second seam section manually.

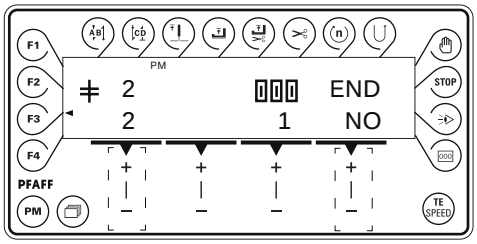

F3

- After the machine has stopped the seam section end must be entered.
  By pressing the knee switch or the F3 key, switch on the end of section with knee switch function.

- By pressing "+" on the corresponding +/- key change to the third seam section.

The third seam section should have
- the thread trimming function at the end of the seam section
- a 2.8 mm stitch length (for roller presser and feed wheel).

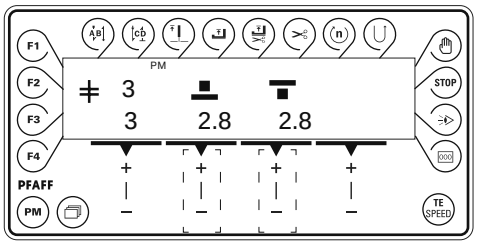

- By pressing the corresponding +/- key set the stitch length for the roller presser at "2.8 ".

- By pressing the corresponding +/- key set the stitch length for the feed wheel at "2.8".

- Sew the third seam section manually.

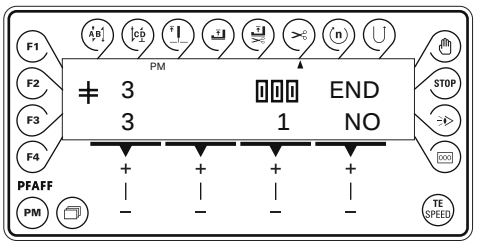

- After the machine has stopped the seam section end must be entered.
  By pressing the pedal in position "2" activate the seam section end by pedal, see Chapter 7.03 Pedal.

- By pressing the thread trimming key, switch on the corresponding function for the seam section.

END
- By pressing the corresponding +/- key select "YES", to conclude the seam input.

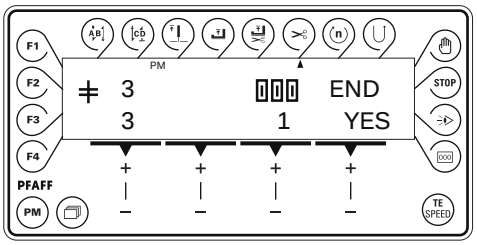

TE SPEED
- The Teach In programming of he seam with the three seam sections is then finished.
  By pressing the TE/Speed key, the thread is trimmed and the selected values are taken over. The program then changes to the sewing mode.

If no end of seam section function is switched on, the end of the seam section will be set with the pedal function, see Chapter 7.03 Pedal.

12 Care and maintenance

Clean	daily, more often if in continuous operation
Oil level (hook oil reservoir)	daily before use
Lubricate the bevel gears	annually

These maintenance intervals are calculated for the average running time of a single shift operation. If the machine is operated more than this, shorter intervals are recommended.

12.01 Cleaning

Clean the hook and hook compartment daily, more often if in continuous operation.



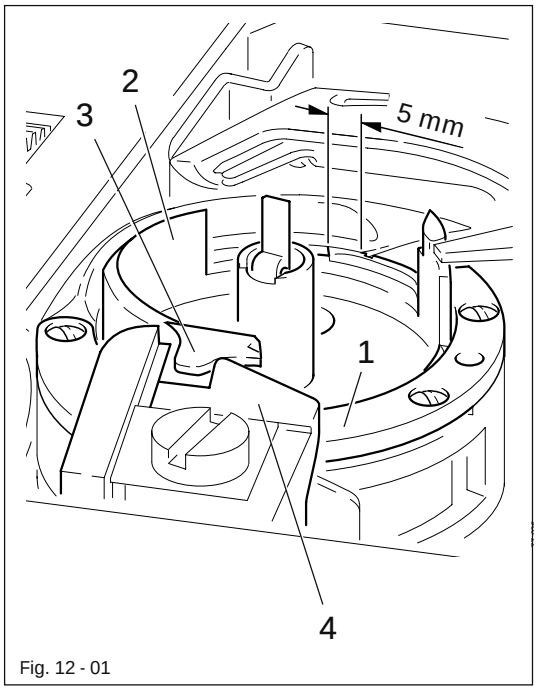

Fig. 12 - 01

Switch the machine off!
Danger of injury if the machine is started accidentally!

- Bring the needle bar to its highest position.
- Open the bed plate slide and remove the bobbin case cap and the bobbin.
- Unscrew hook gib 1.
- Turn the handwheel until the point of bobbin case 2 penetrates into the groove of the hook race approx. 5 mm.
- Remove bobbin case 2.
- Clean the hook race with paraffin.
- When inserting the bobbin case 2, ensure that the horn 3 of the bobbin case 2 meshes in the recess of the retaining lug 4.
- Screw hook gib 1 back on.
- Insert the bobbin and bobbin case and close the bed plate slide.

12.02 Filling the oil reservoir

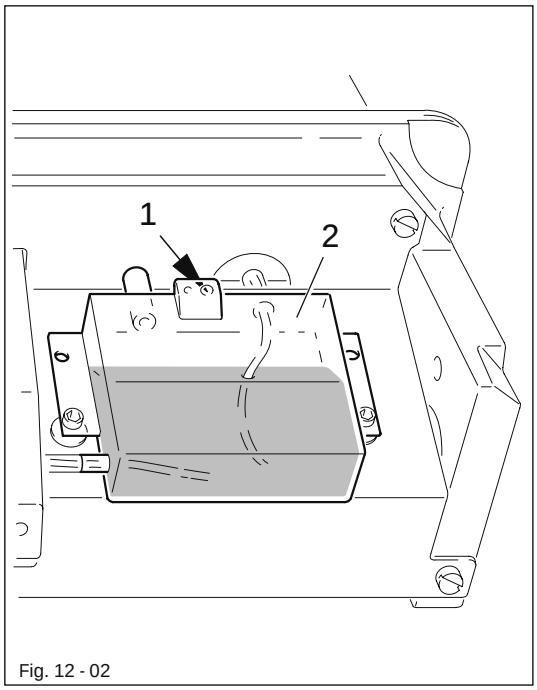

Fig. 12 - 02

Check the oil level before every use.

There must always be oil in the oil reservoir 2.

- Fill oil through hole 1 into the reservoir 2 as required.

Use only oil with a mean viscosity of 22.0 mm^2/s at 40°C and a density of 0.865 g/cm^3 at 15°C.

We recommend PFAFF sewing machine oil.
Part no. 280-1-120 144.

12.03 Lubricating the bevel gears

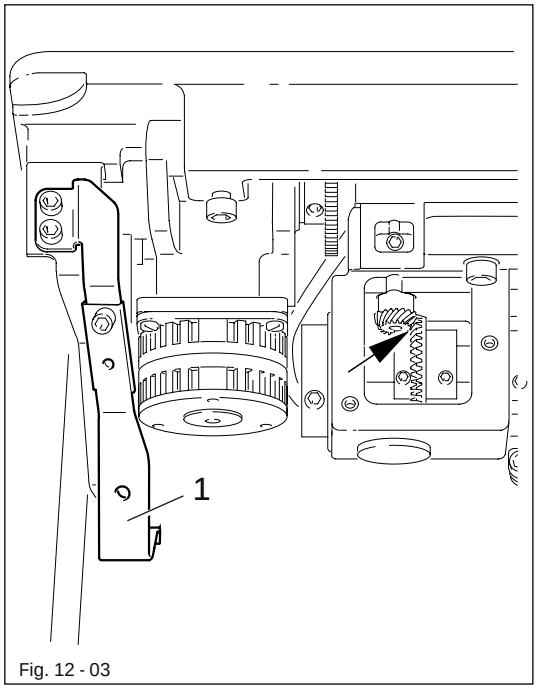

Fig. 12 - 03

Switch the machine off!
Danger of injury if the machine is started accidentally!

- The bevel gears of the hook drive are to be greased once a year.
- Lay the machine head backwards onto its support.
- Unscrew the cover of the bevel gear case.
- Brush a little grease onto all of the tooth flanks (see arrow).
- Screw on the lid.
- To stand the machine head up again, press safety plate 1 to the rear and stand the machine head up using both hands.

Use both hands to return the machine to an upright position.
Danger of crushing between machine head and table top.

We recommend PFAFF hard soap grease with a drop point of approx. 150°C
Part no. 280-1-120 243.

13 Adjustment



On the PFAFF 521 and the PFAFF 1521 do not use a screw clamp on the needle bar, because this will damage the special coating of the needle bar.

13.01 Notes on adjustment

All following adjustments are based on a fully assembled machine and may only be carried out by expert staff trained for this purpose.
Machine covers, which have to be removed and replaced to carry out checks and adjustments, are not mentioned in the text.
The order of the following chapters corresponds to the most logical work sequence for machines which have to be completely adjusted. If only specific individual work steps are carried out, both the preceding and following chapters must be observed.
Screws, nuts indicated in brackets ( ) are fastenings for machine parts, which must be loosened before adjustment and tightened again afterwards.



The machine must be switched off for all adjustment work!
Danger of injury if the machine is started accidentally!

13.02 Tools, gauges and other accessories for adjusting

- 1 set of screwdrivers with blade widths from 2 to 10 mm
- 1 set of wrenches with jaw widths from 7 to 14 mm
- 1 set of Allan keys from 1.5 to 6 mm
- 1 metal rule, (Part No. 08-880 218-00)
- 1 adjustment pin (needle position in sewing direction, Part no. 61-111 641-46)
- 1 adjustment pin for needle bar rise, (Part No. 61-111 641-39)
- Needles, PFAFF 521: System 134, PFAFF 1521: System 134-35
- Sewing thread and test material

13.03 Abbreviations

TDC = top dead center
BDC = bottom dead center

13.04 Adjusting the basic machine

13.04.01 Needle position in the direction of sewing

Requirement
With the stitch length set at "5", in its front and rear point of reversal the needle should be the same distance from the inside edges of the needle hole.

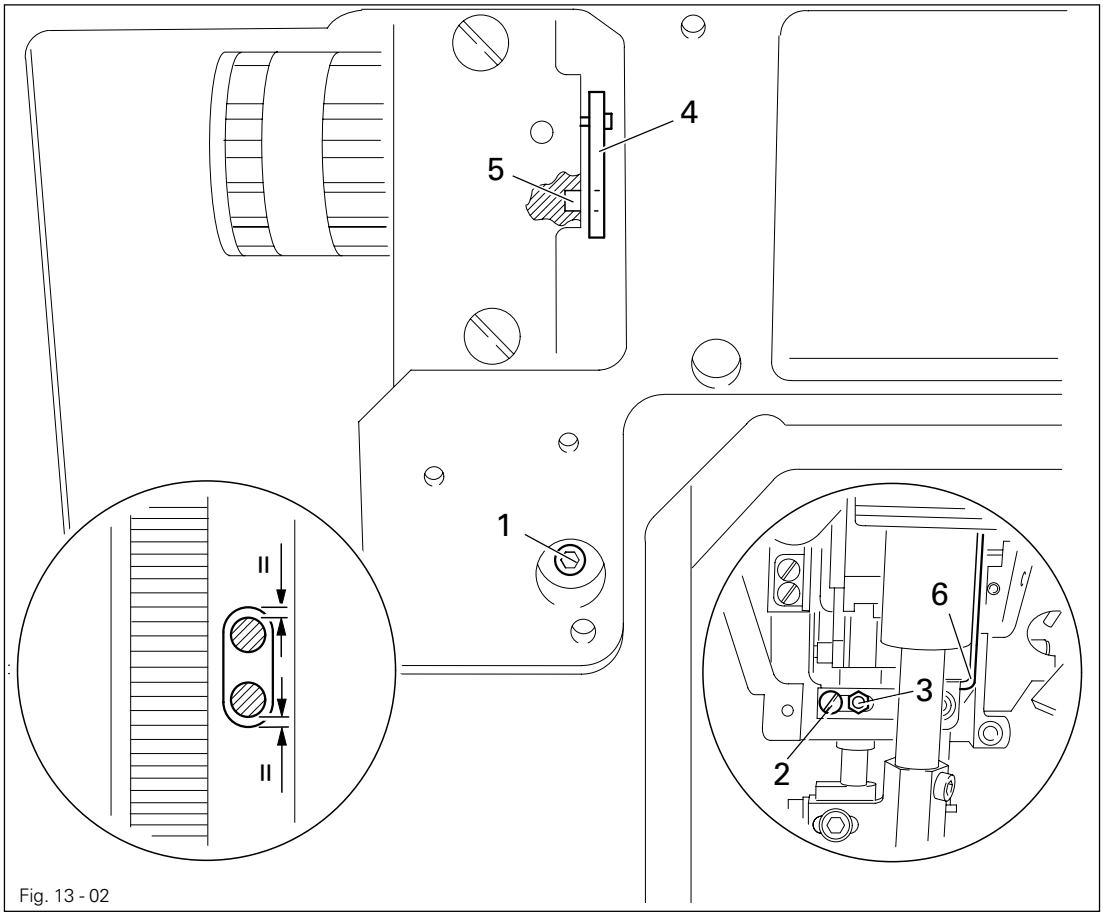

Fig. 13 - 02

- Switch on the machine and set the stitch length at "5".
- Switch the machine on and off (synchronisation of the needle bar to the stitch length).
- Sew one stitch and check the rear position of the needle in accordance with the **requirement**.
- Press the reverse feed key, sew one stitch and check the front position of the needle in accordance with the **requirement**.
- Switch off the machine.
- To carry out the adjustment, loosen screw **1** through the hole on the back of the housing.
- Loosen screw **2** and nut **3**.
- Guide the adjustment pin (part no. 61-111 641-46) through the elongated hole on the rear side of the housing and insert it into hole **5** through the hole in lever **4**.
- Adjust the needle bar frame **6** (screw **1**) in accordance with the **requirement**.

Screw **2** and nut **3** remain loosened for the following adjustments.

- Carry out a check in accordance with the **requirement**.

13.04.02 Positioning the needle crosswise to the direction of sewing

Requirement
The needle should penetrate the middle of the needle hole as viewed crosswise to the direction of sewing.

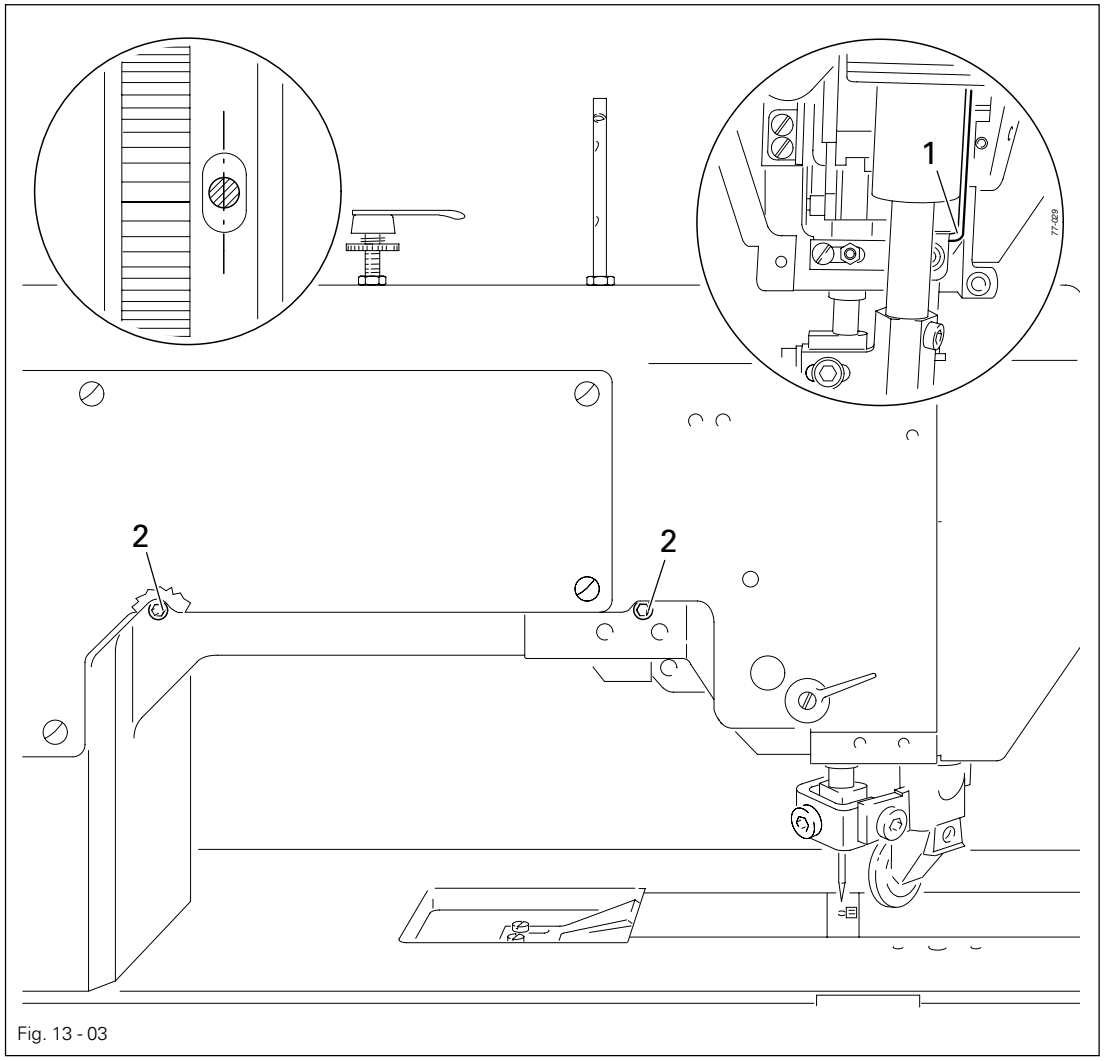

Fig. 13 - 03

- Move the needle bar frame **1** (screws **2**) in accordance with the requirement.

Screws **2** are accessible through the holes on the back of the housing.

13.04.03 Limiting the needle bar frame

Requirement
With the stitch length set at "**5**", when the needle is in its front and rear point of reversal, screw **4** should be the same distance from the inside edge of its hole.

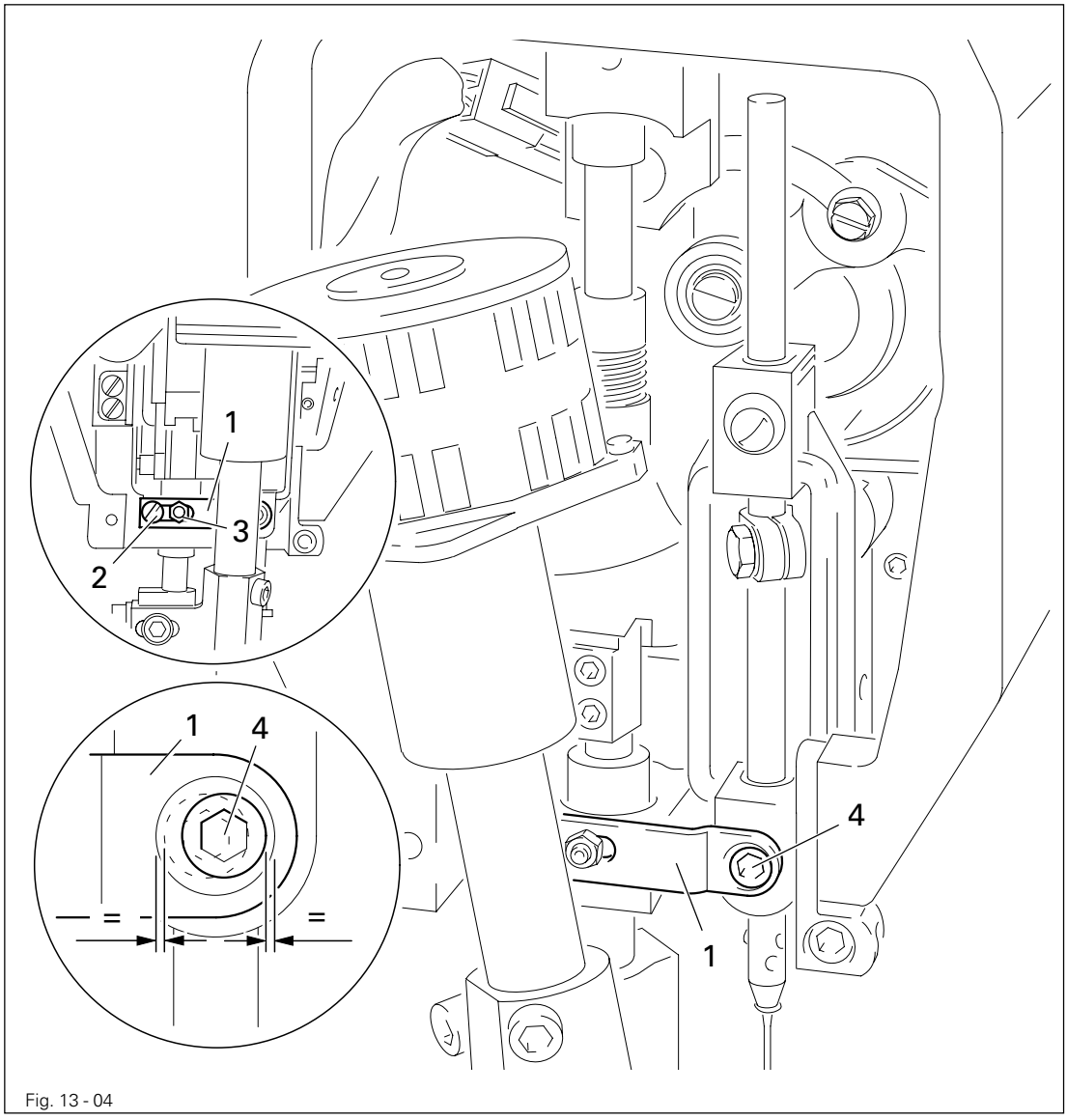

Fig. 13 - 04

- Switch on the machine and set the stitch length at "**5**".
- Sew one stitch and check the rear position of screw **4** in accordance with the **requirement**.
- Operate the reverse feed key, sew one stitch and check the front position of screw **4** in accordance with the **requirement**.
- To carry out the adjustment, shift plate **1** (screw **2** and nut **3**) in accordance with the **requirement**.

13.04.04 Preadjusting the needle height

Requirement
With the needle bar at TDC there must be approx. **22 mm** between the point of the needle and the needle plate.

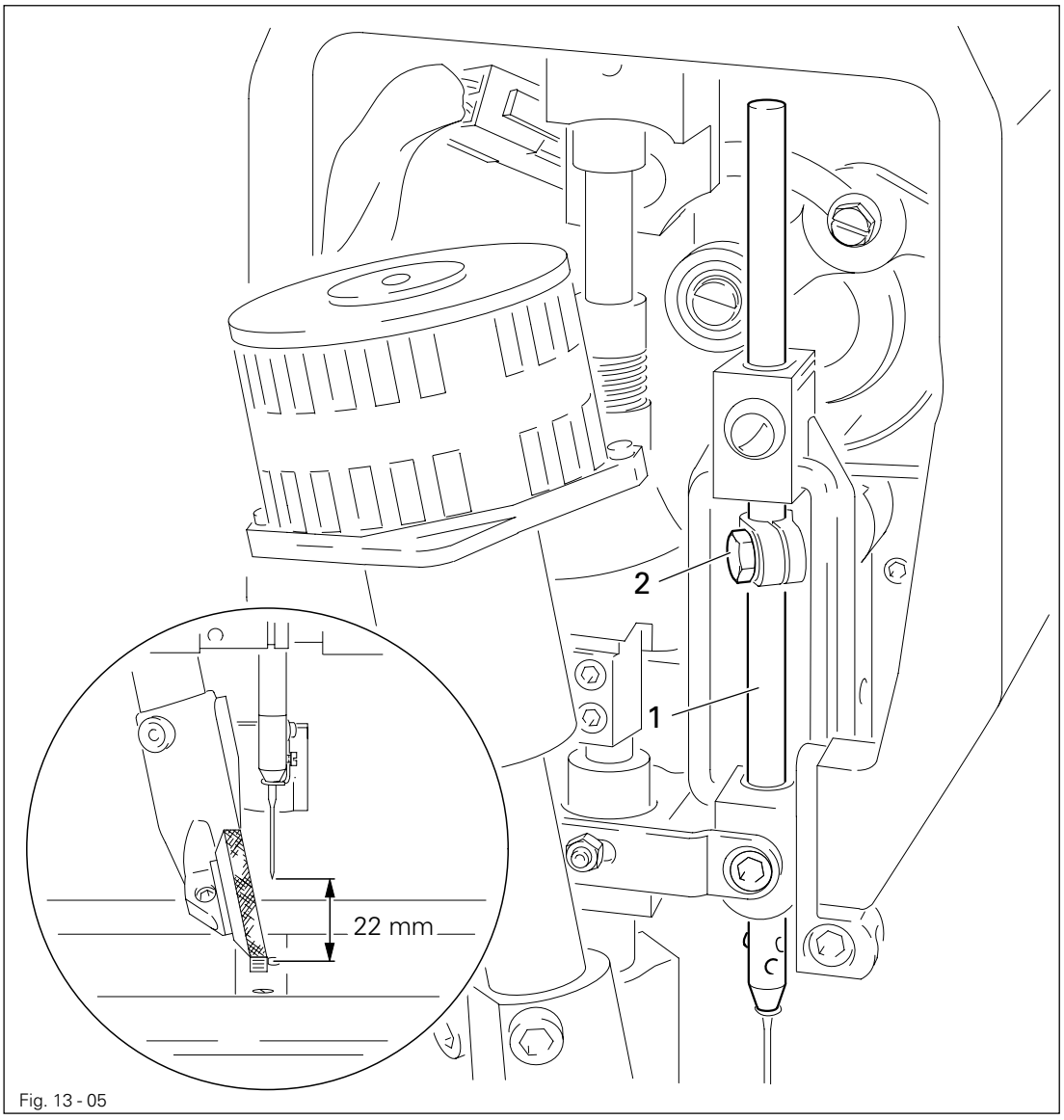

Fig. 13 - 05

- Move the needle bar **1** (screw **2**) in accordance with the **requirement** without turning it.

13.04.05 Hook-to-needle clearance, needle rise, needle height and needle guard

Requirements

With the needle at 2.0 after BDC and with the stitch length at " **0.8** "

1. the hook point must point to the middle of the needle and be **0.05** to **0.1 mm** from the needle,
2. the top edge of the needle eye must be **0.8** to **1.0 mm** beneath the hook point and
3. the needle guard **4** must lightly touch the needle.

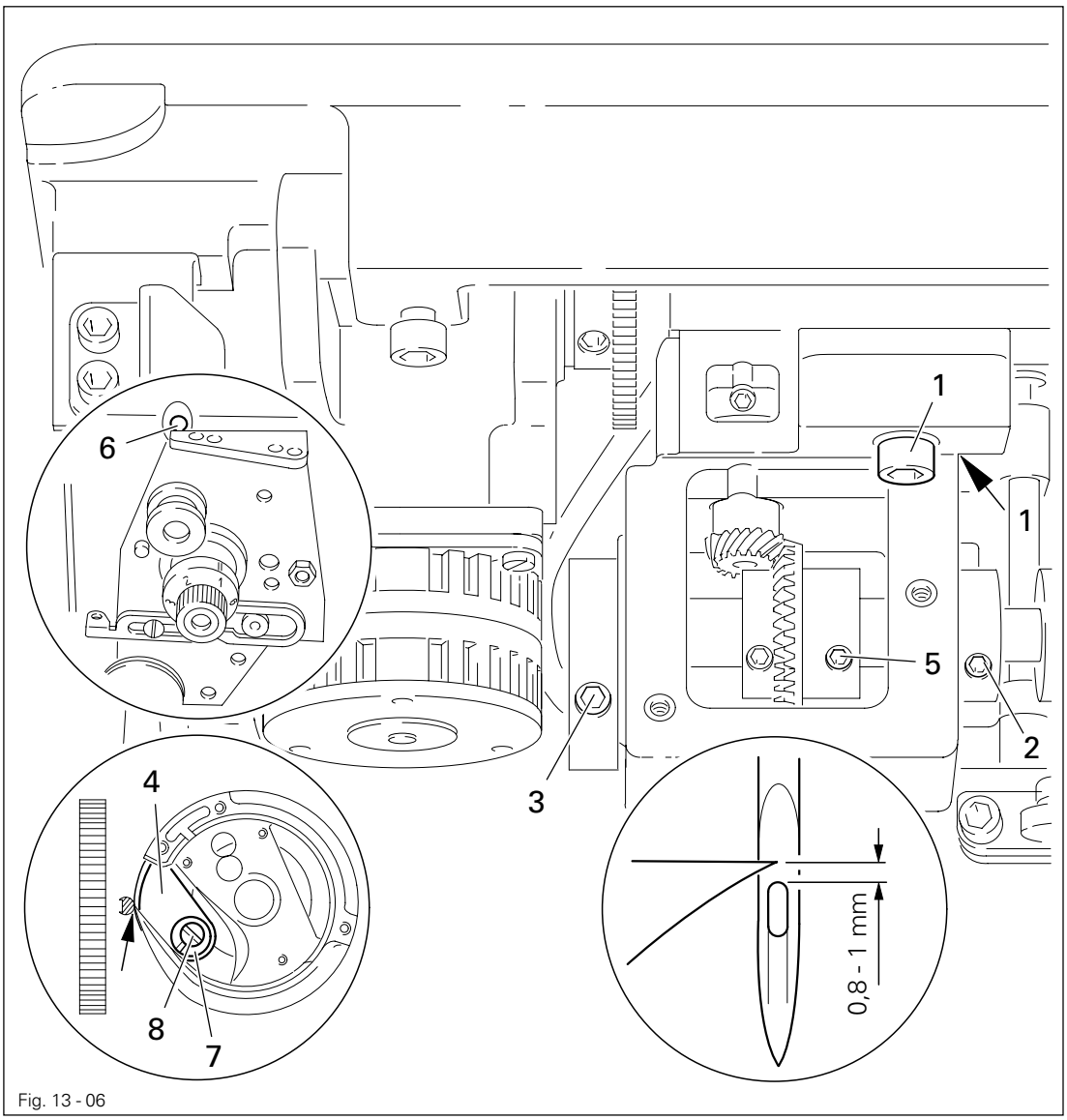

Fig. 13 - 06

- Turn the machine on.
- Set the stitch length to " **0.8** " and sew four to five stitches (without trimming).
- Turn the machine off.
- Loosen screws **1, 2** and **3**.
- Move the hook bearing in accordance with **requirement 1** taking care to ensure that the needle is not pressed by the needle guard **4**.
- Tighten screws **1** and **2** while positioning the second screw **2** on the recess of the shaft in the direction of rotation.

- Loosen screws **5**.
- Bring the needle bar to 2.0 after BDC.
- Place the adjustment pin (Part no. 61-111 641-39) into hole **6** and place under pressure.
- Position the hook point at the middle of the needle and tighten screws **5**.
- Set the needle height in accordance with **requirement 2**.
- Remove the adjustment pin from hole **6**.
- Align needle guard **4** in accordance with **requirement 3** by turning the eccentric **7** (screw **8**).

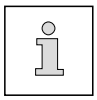

Screws **3** remain loosened for further adjustments.

13.04.06 Balancing weight

Requirement
With the needle bar at TDC, the largest eccentricity of the balancing weight **1** must be facing downwards.

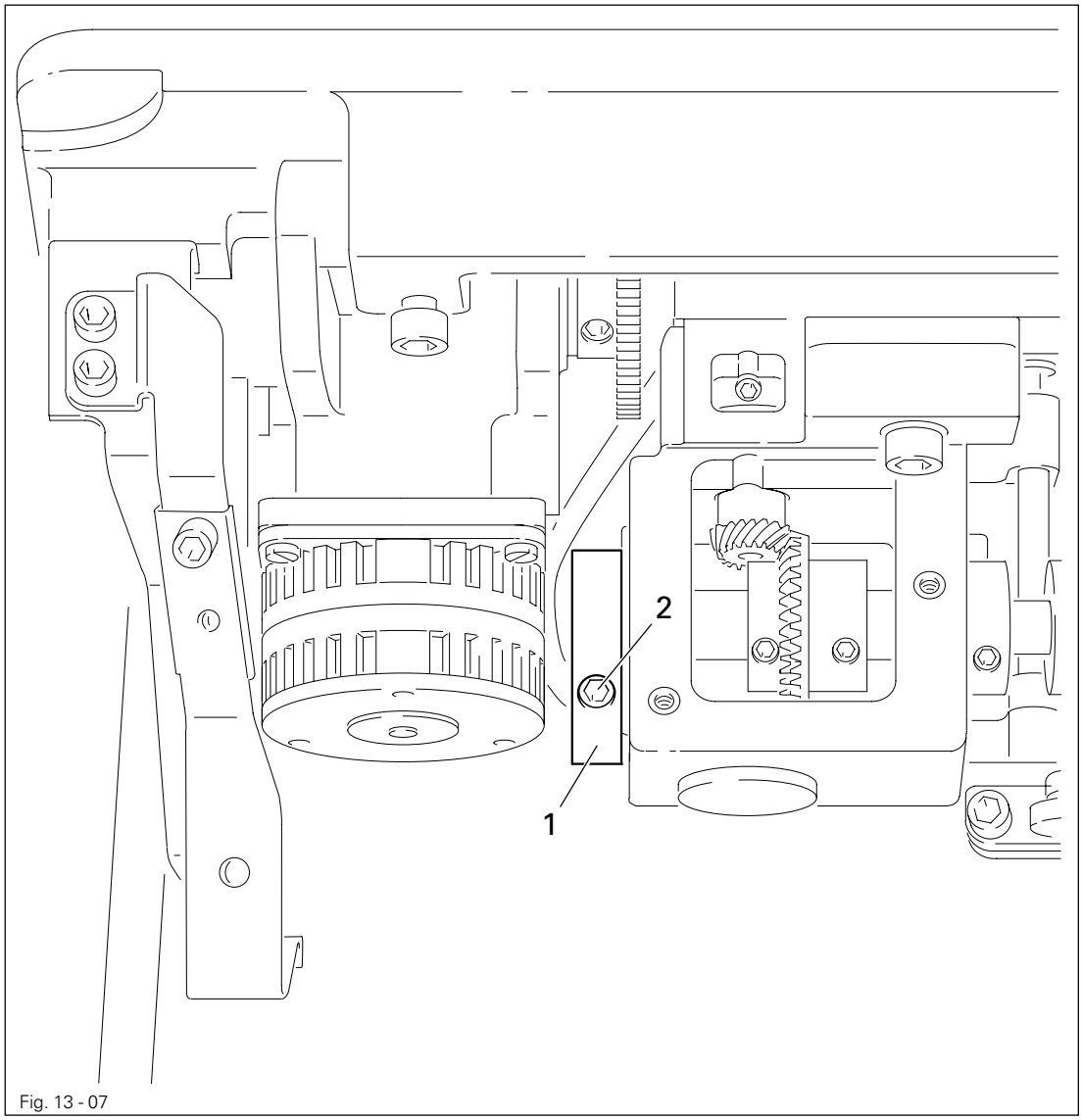

Fig. 13 - 07

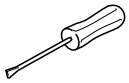

- Bring the needle bar to TDC.
- Turn the balancing weight **1** in accordance with the **requirement**.
- Tighten screws **2**.

13.04.07 Bobbin-case-opener eccentric and retaining lug

Requirements

1. With the needle bar at BDC the bobbin case opener **5** must be at its rear point of reversal.
2. The front edges of retaining spring **3** and retaining lug **6** must be flush.

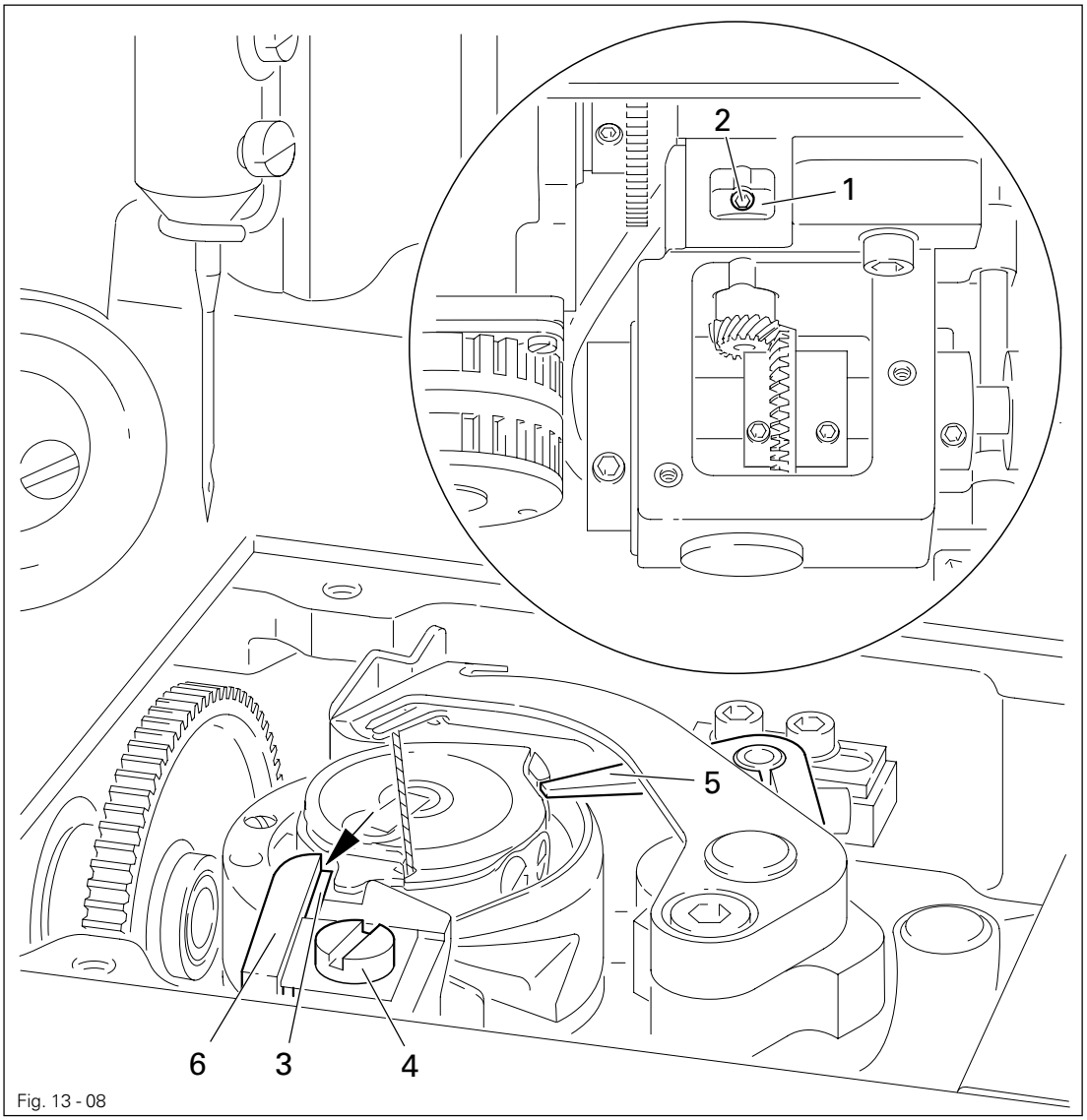

Fig. 13 - 08

- Bring the needle bar to BDC.
- Turn eccentric **1** (screws **2**) in accordance with **requirement 1**.
- Move retaining spring **3** (screw **4**) in accordance with **requirement 2**.

When tightening screws **2**, press the hook downwards and eccentric **1** upwards so that the hook shaft does not exhibit any axial play.

13.04.08 Bobbin case opener position

Requirements

1. The top edges of bobbin case opener **2** and bobbin case lug **5** must be at the same height.
2. When the bobbin case **2** is at its rear point of reversal, the bobbin case carrier **3** and the stop spring **4** must be **the width of one thread** "**X**" apart.

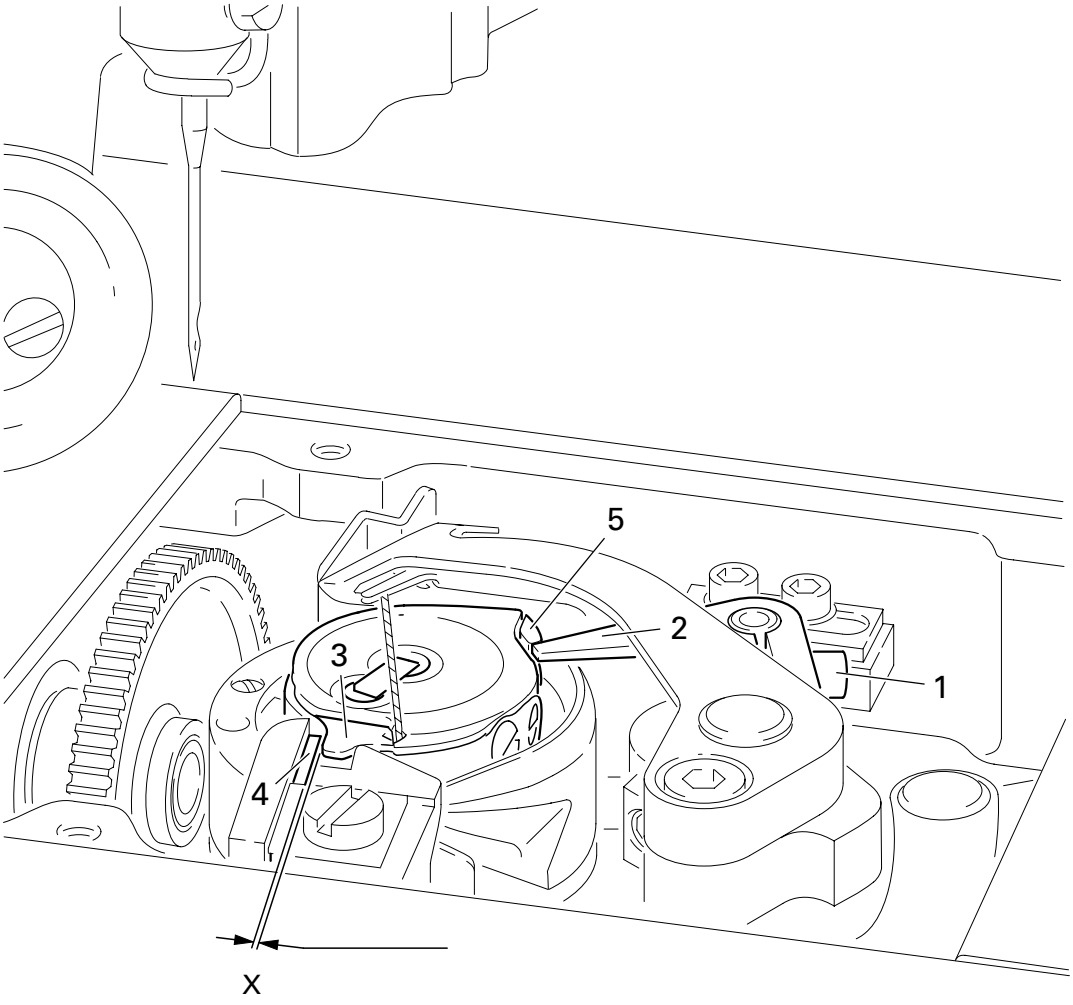

Fig. 13 - 09

- Loosen screw **1**.
- Adjust the bobbin case height in accordance with **requirement 1** by moving bobbin case opener **2**.
- Bring the fixing collar to rest on bobbin case opener **2**.
- Bring the bobbin case opener **2** to its rear point of reversal.
- Adjust the clearance between the bobbin case base **3** and stop spring **4** in accordance with requirement **2** by turning the bobbin case opener **2**.
- Tighten screw **1**.

13.04.09 Feed wheel

Requirement

The feed wheel **1** must

1. protrude above the needle plate by the height of the teeth (approx. **0.8 mm**) and
2. be in the middle of the needle plate cutout.

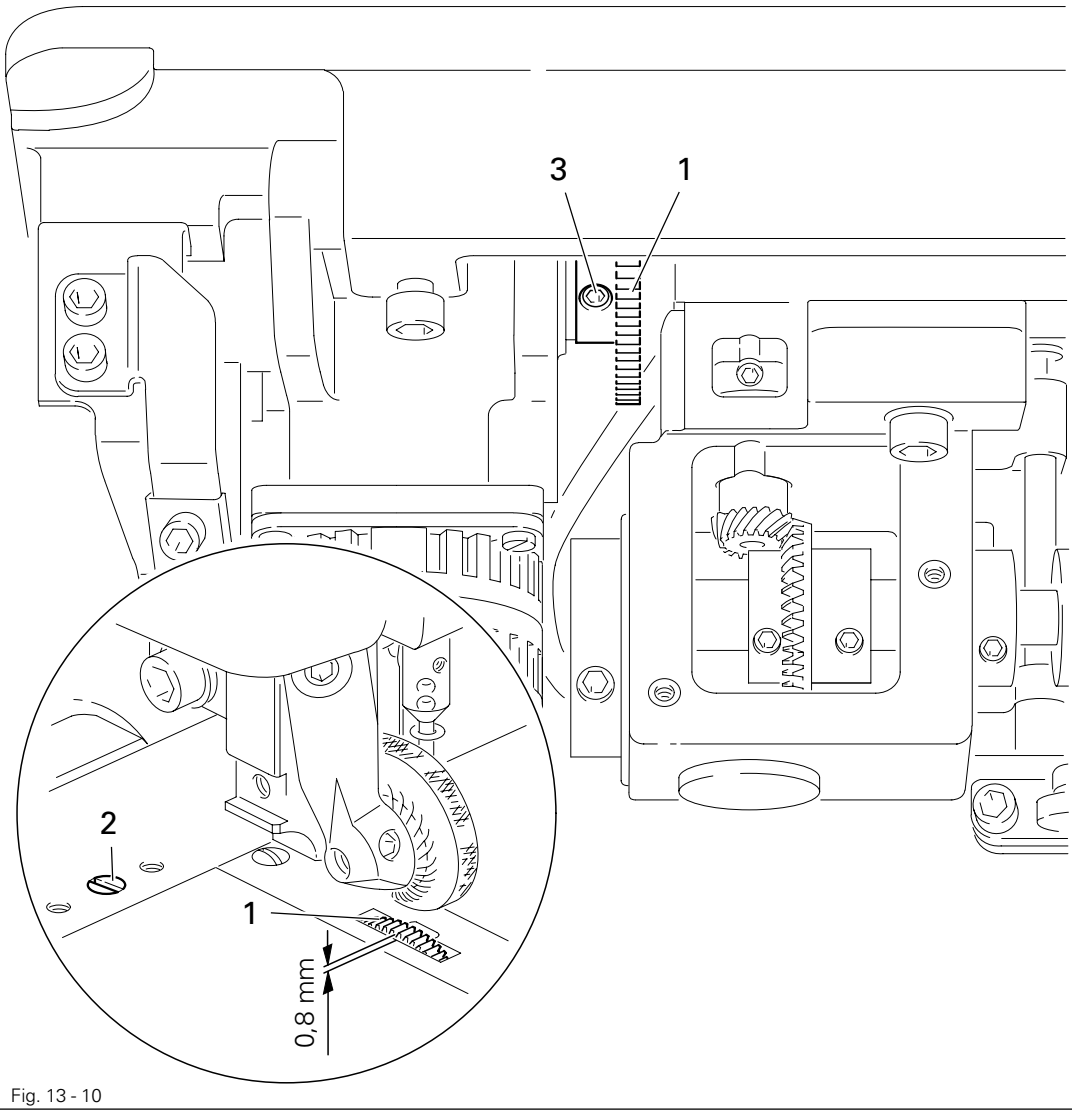

Fig. 13 - 10

- Adjust the height of the feed wheel **1** by turning screw **2** in accordance with **requirement 1**.
- Move feed wheel **1** (screws **3**) in accordance with **requirement 2**.

13.04.10 Clearance between roller presser and feed wheel

Requirement
With lever **1** raised the clearance between the roller presser and the feed wheel must be **7 mm**.

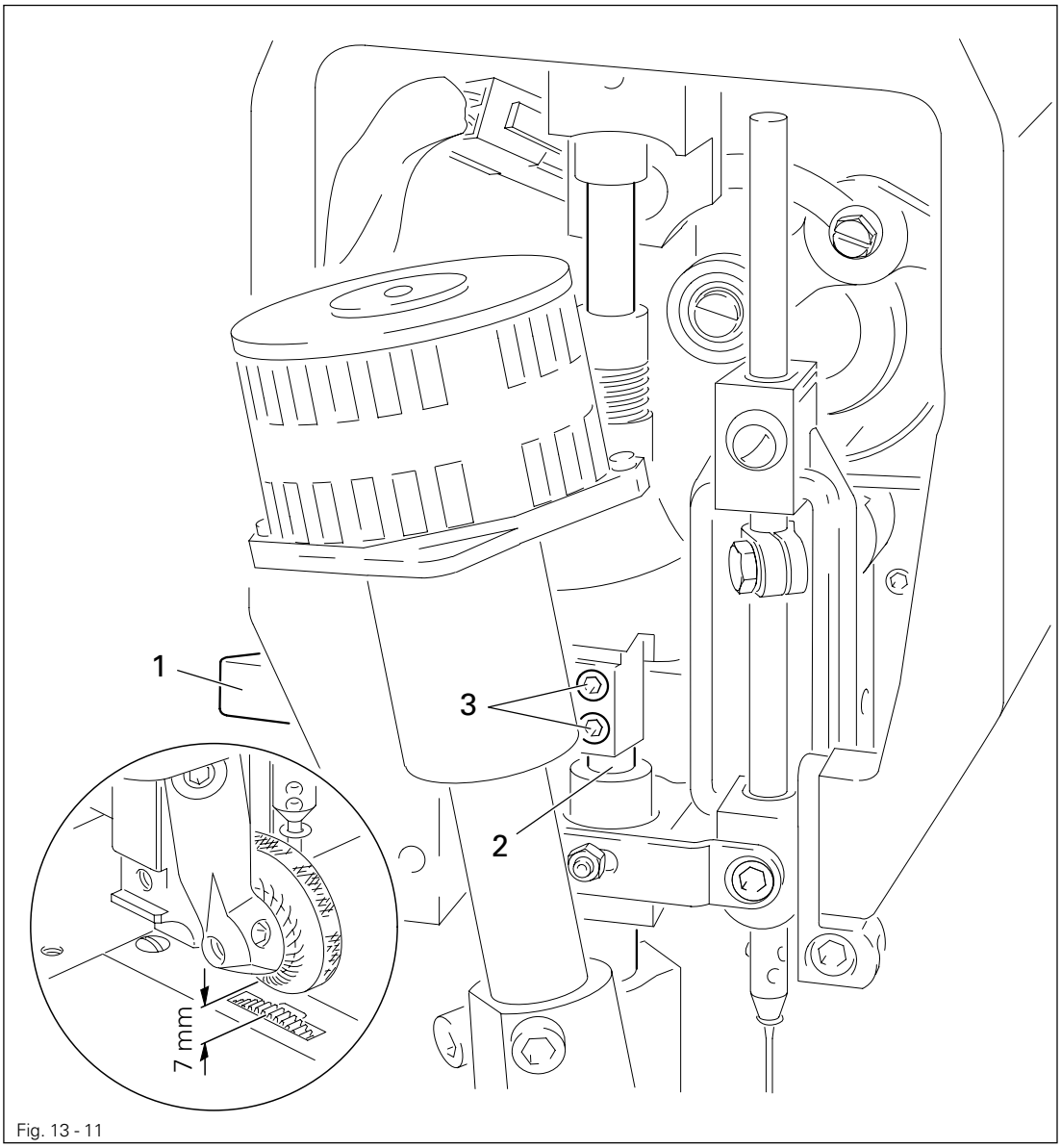

Fig. 13 - 11

- Raise lever **1**.
- Move bar **2** (screws **3**) in accordance with the **requirement**. Take care to ensure that the roller presser is parallel to the feed wheel.

13.04.11 Roller presser

Requirements

When the roller presser **1** is resting on the feed wheel **5** it must

1. be parallel to the feed wheel **5** when viewed in the direction of sewing,
2. be in the middle of the needle when viewed in the direction of sewing and
3. be as close as possible to the needle when viewed across the direction of sewing.

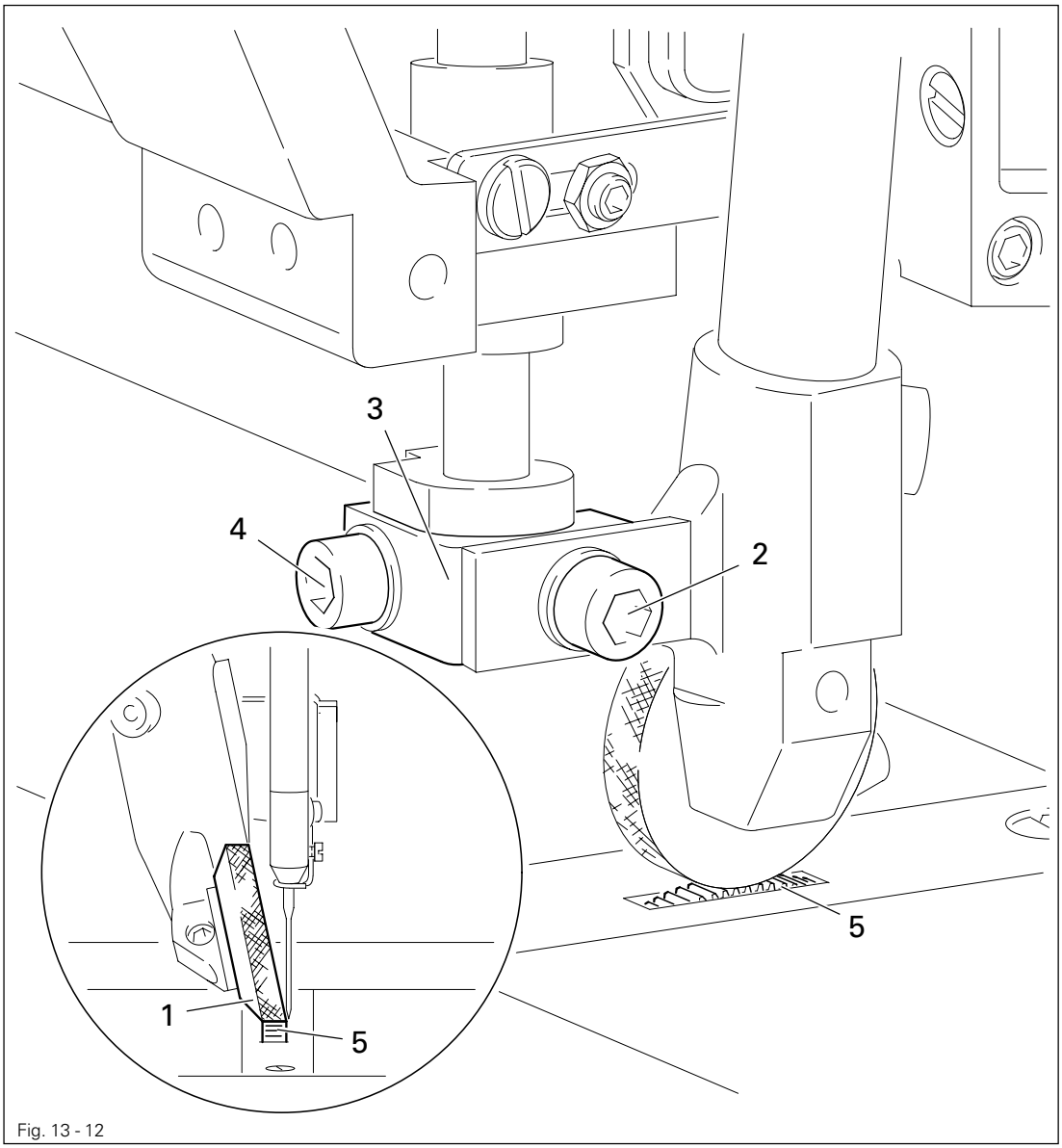

Fig. 13 - 12

- Raise the roller presser **1**.
- Always observe **requirement 1** when carrying out the following adjustments.
- Move the roller presser **1** (screw **2**) in accordance with **requirement 2**.
- Allow the roller presser **1** to come to rest on the feed wheel **5**.
- Move the roller presser bracket **3** (screw **4**) in accordance with **requirement 3**.

When sewing very tight curves the roller presser **1** should be moved toward the operator a little.

13.04.12 Automatic presser-foot lifter

Requirement
When solenoid **1** is activated, lever **3** for the roller presser must drop automatically.

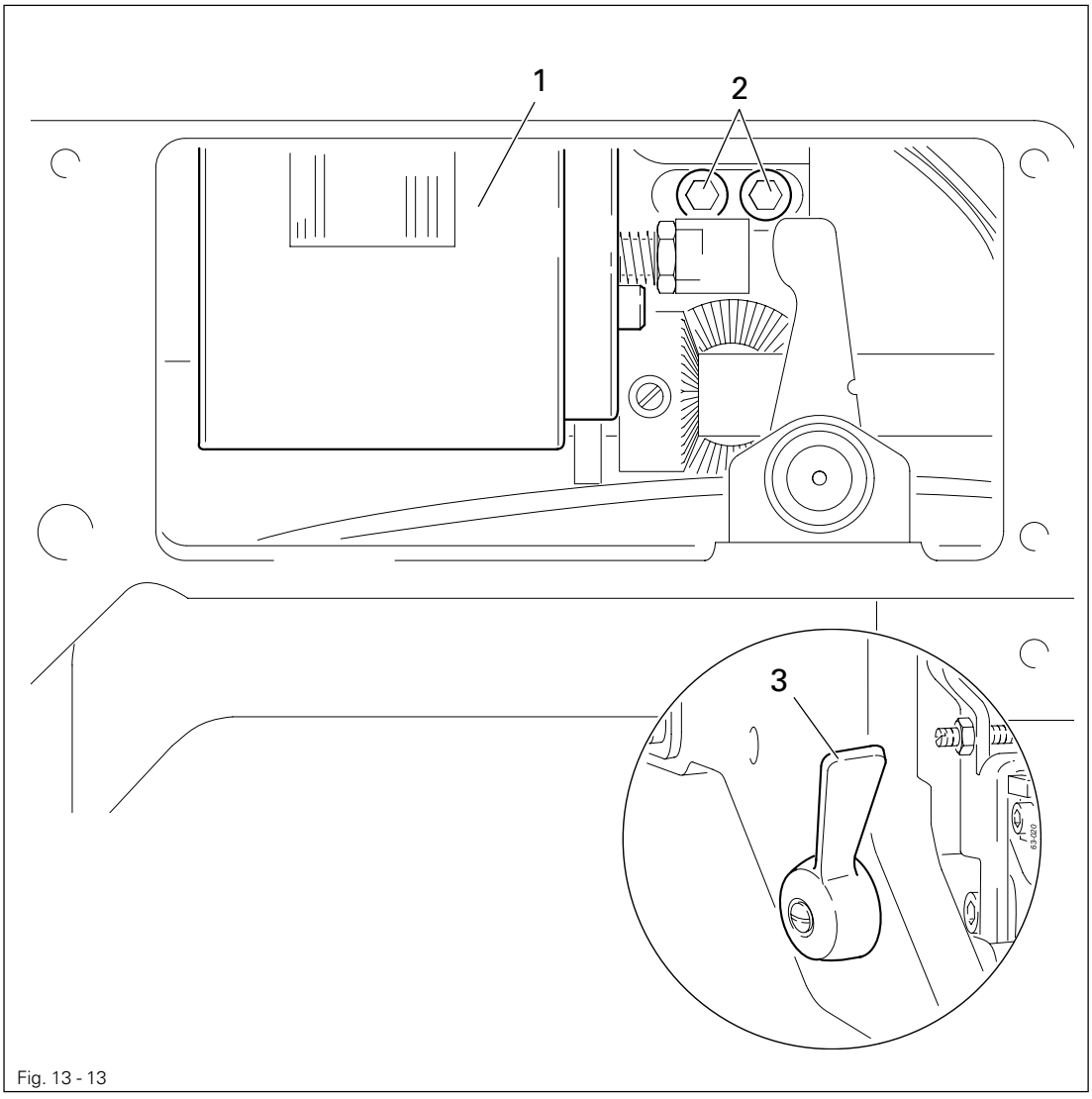

Fig. 13 - 13

- Move solenoid **1** (screws **2**) in accordance with the **requirement**.
- Turn the machine on and check the **requirement**.
- Turn the machine off.

Depending on the thickness of the material, the clearance between the roller presser and the feed wheel can be increased to a maximum of **10 mm** by moving the solenoid **1** to the right.

13.04.13 Knee lever

Requirements

1. The knee lever must exhibit a little play before the roller presser is raised.
2. The lever for the roller presser must drop automatically when the knee lever is pressed as far as it will go.
3. Bar **1** of the knee lever must be at an angle of approx. **75°** to the bedplate.

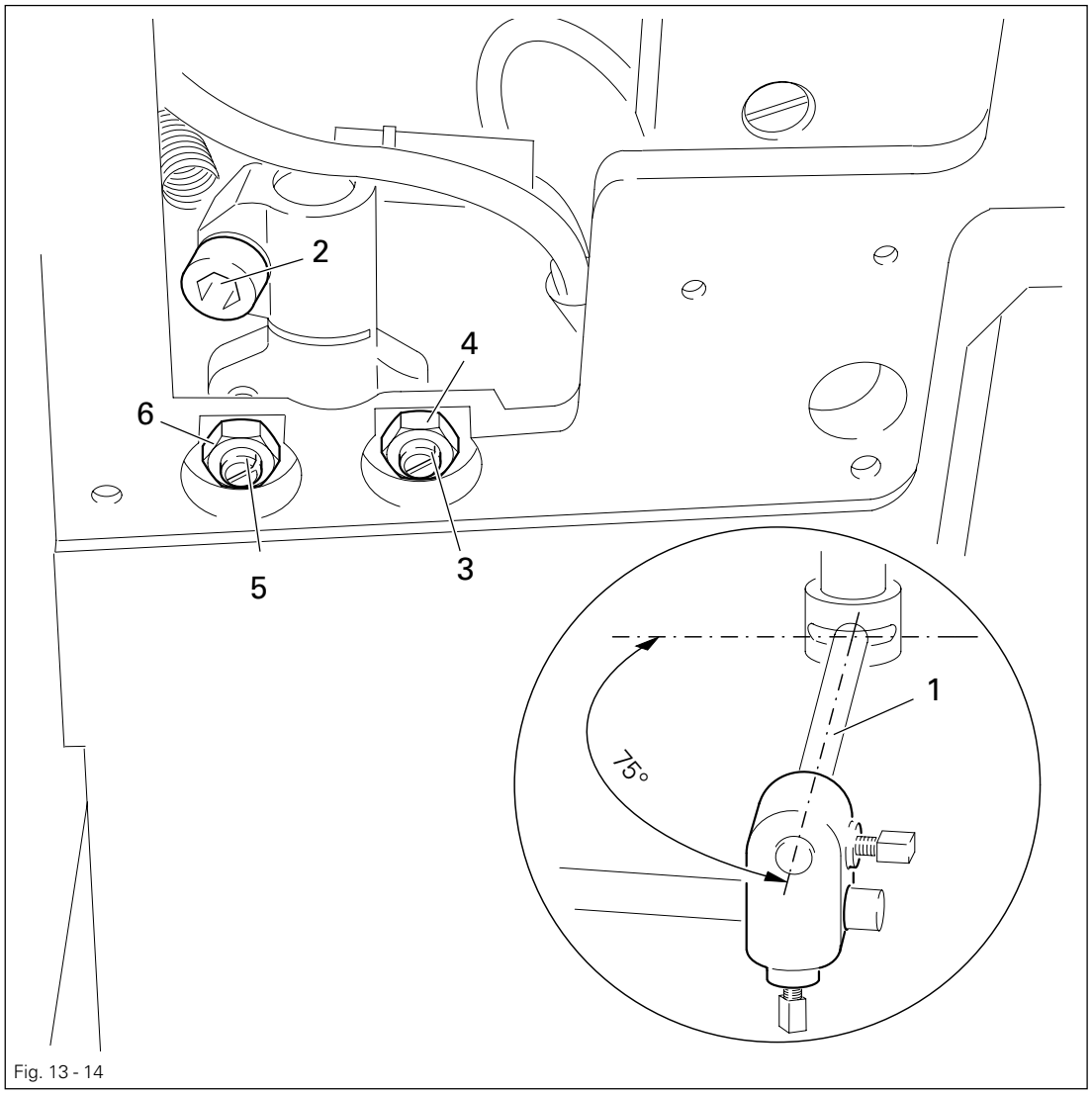

Fig. 13 - 14

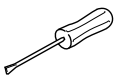

- Turn screw **3** (nut **4**) in accordance with **requirement 3**.
- Turn screw **5** (nut **6**) in accordance with **requirement 1**.
- Adjust bar **1** (screw **2**) in accordance with **requirement 2**.

13.04.14 Tension release

Requirement
With lever **1** raised or the automatic presser foot lifter activated, both tension discs **6** must be at least **0.5 mm** apart.

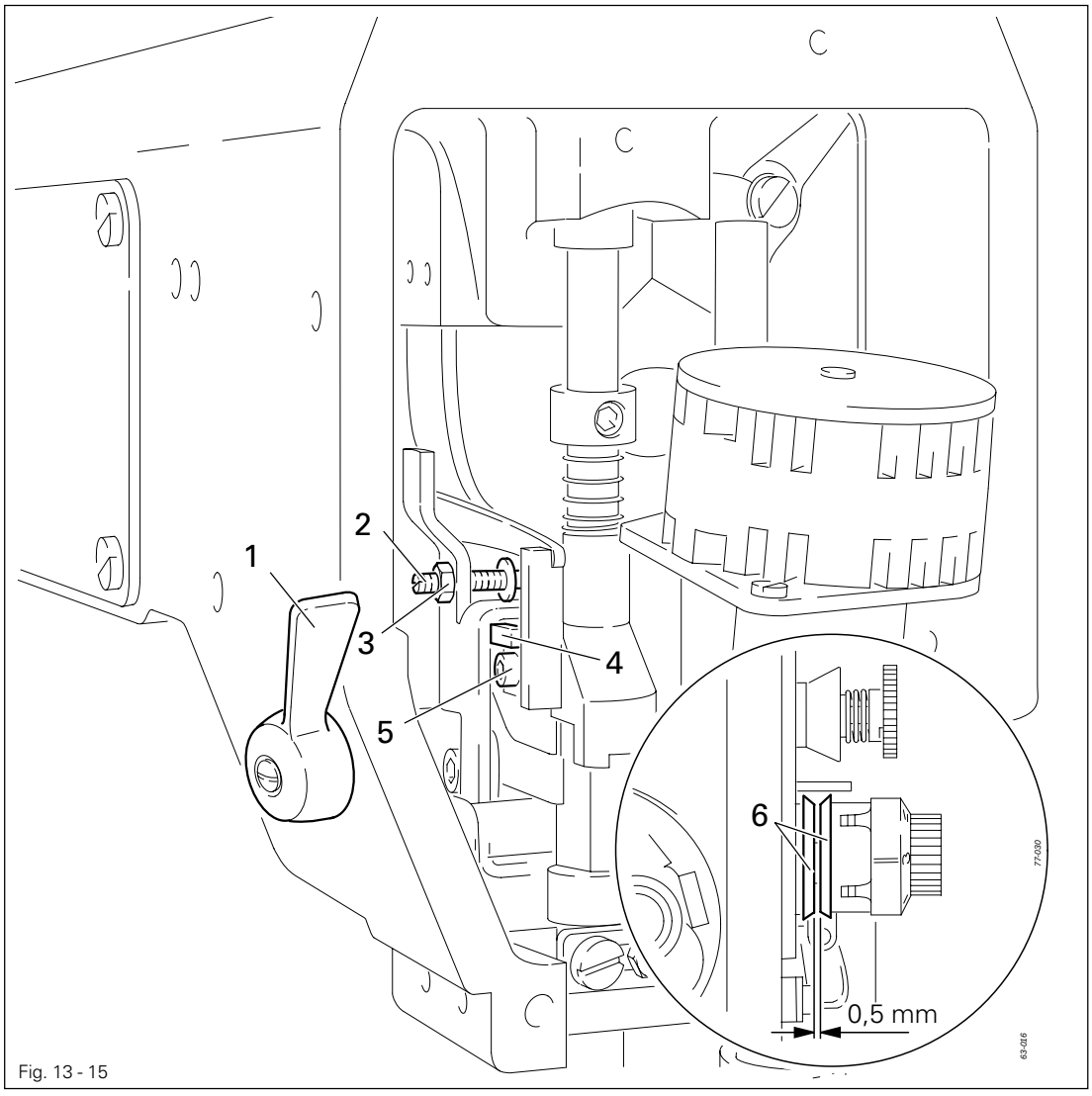

Fig. 13 - 15

- Raise the roller presser using lever **1**.
- Adjust screw **2** (nut **3**) in accordance with the **requirement**.
- Raise the roller presser using the automatic presser foot lifter or the knee lever.
- Move the drive dog **4** (screw **5**) in accordance with the **requirement**.

If a tension release is not desired when activating the automatic presser-foot lifter or the knee lever, adjust the drive dog **4** accordingly.

13.04.15 Thread check spring

Requirements

1. The motion of the thread check spring **7** must be finished when the needle point enters the material (spring stroke approx. **7 mm**).
2. When the thread loop is at its largest when going around the hook, the thread check spring must raise slightly from the workpiece rack **1**.

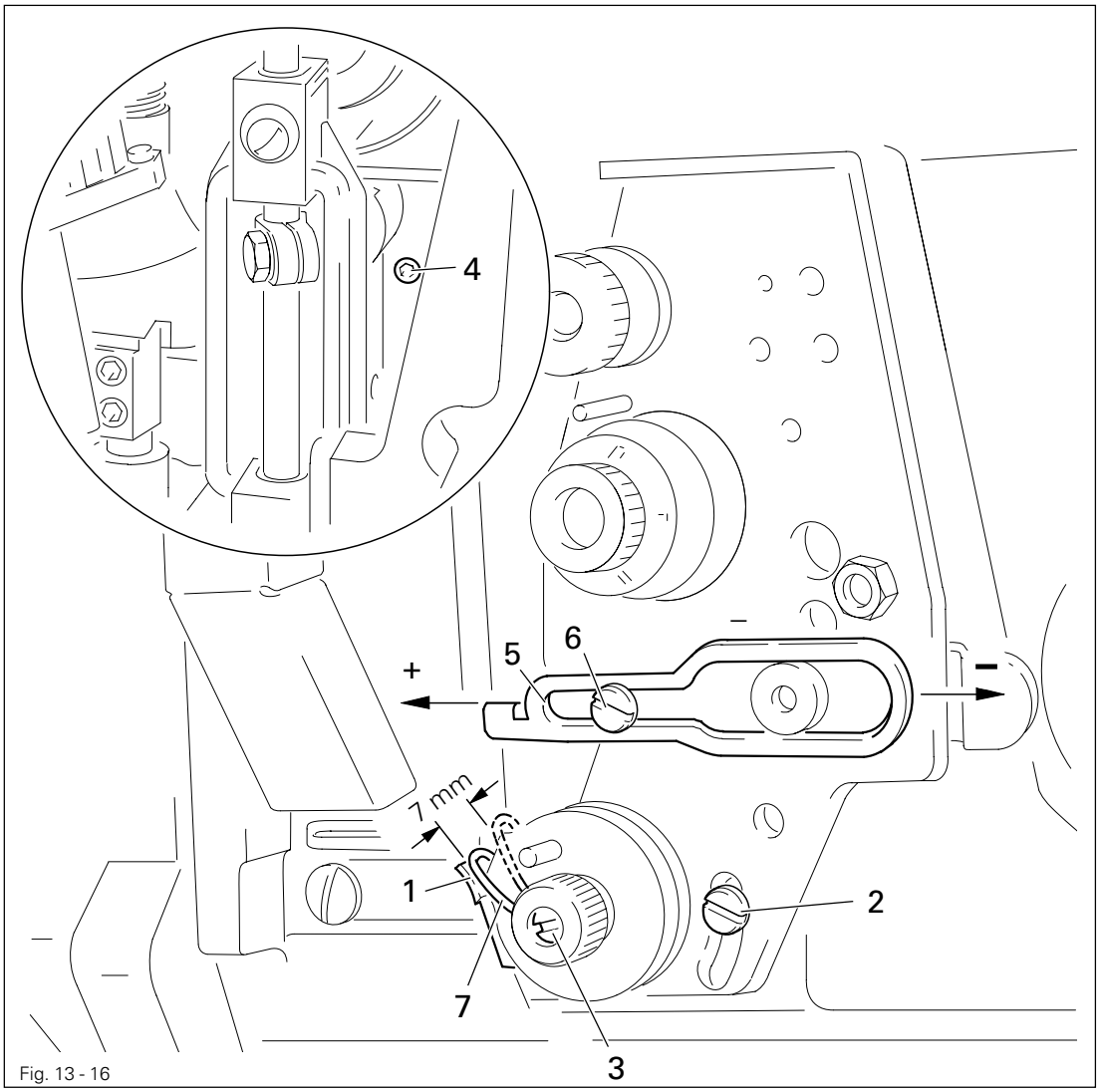

Fig. 13 - 16

- Move workpiece rack **1** (screw **2**) in accordance with **requirement 1**.
- Turn screw **3** (screw **4**) to adjust the strength of the spring.
- Move the slack thread regulator **5** (screw **6**) in accordance with requirement **2**.

Due to technical sewing reasons it may be necessary to deviate from the spring stroke / spring strength mentioned here.
Move the slack thread regulator **5** (screw **6**) toward the "**+**" (= more thread) or toward the "**-**" (= less thread).

13.04.16 Bobbin winder

Requirements

1. With the bobbin winder on, the bobbin winder spindle must engage reliably. With the bobbin winder off, the friction wheel **5** must not engage the drive wheel **1**.
2. The bobbin winder must turn off automatically when the thread level is approx. **1 mm** from the edge of the bobbin.

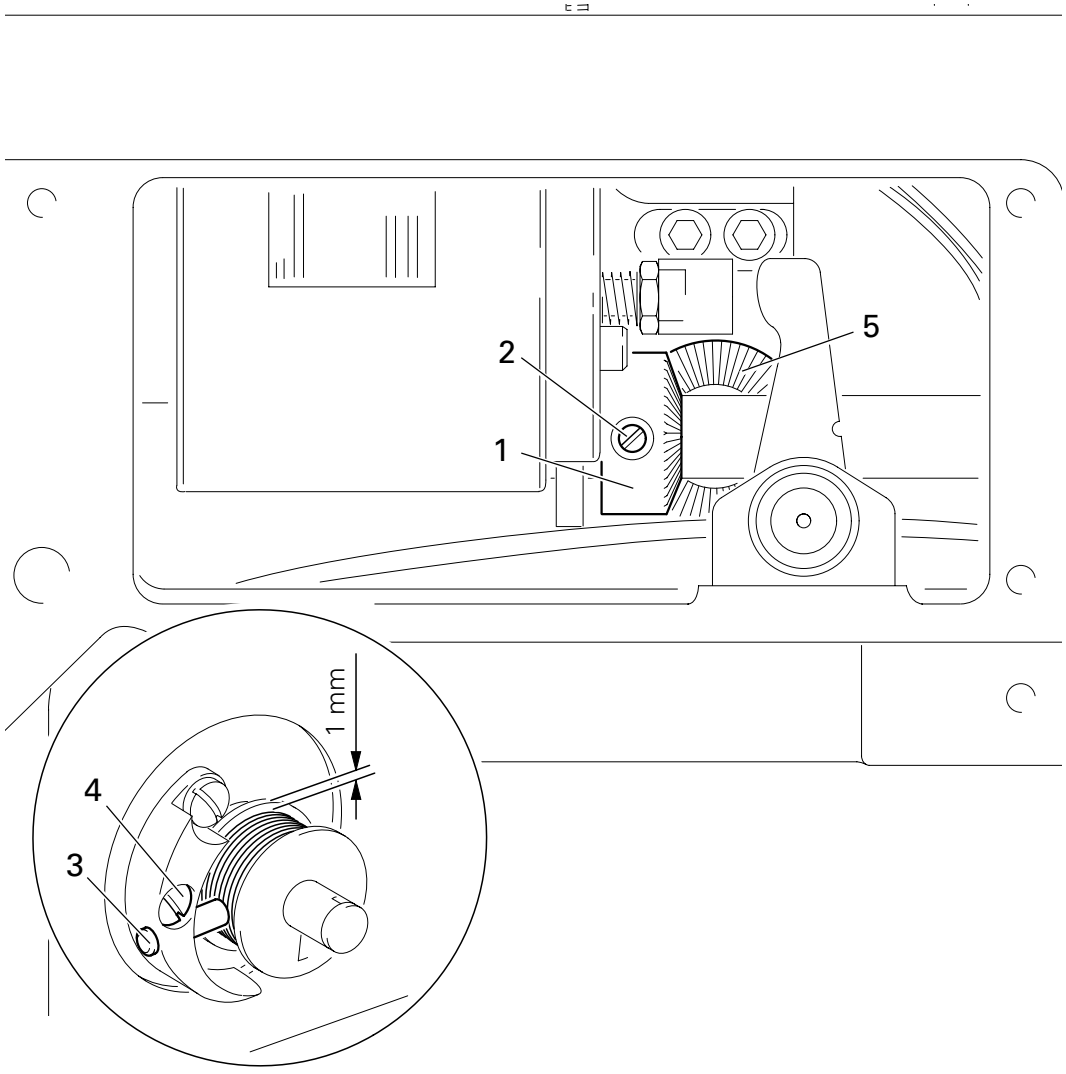

Fig. 13 - 17

- Move drive wheel **1** (screws **2**) in accordance with **requirement 1**.
- Move pin **3** (screw **4**) in accordance with **requirement 2**.

13.04.17 Roller presser pressure

Requirements

1. The material must be fed reliably.
2. There must not be any pressure marks on the material.

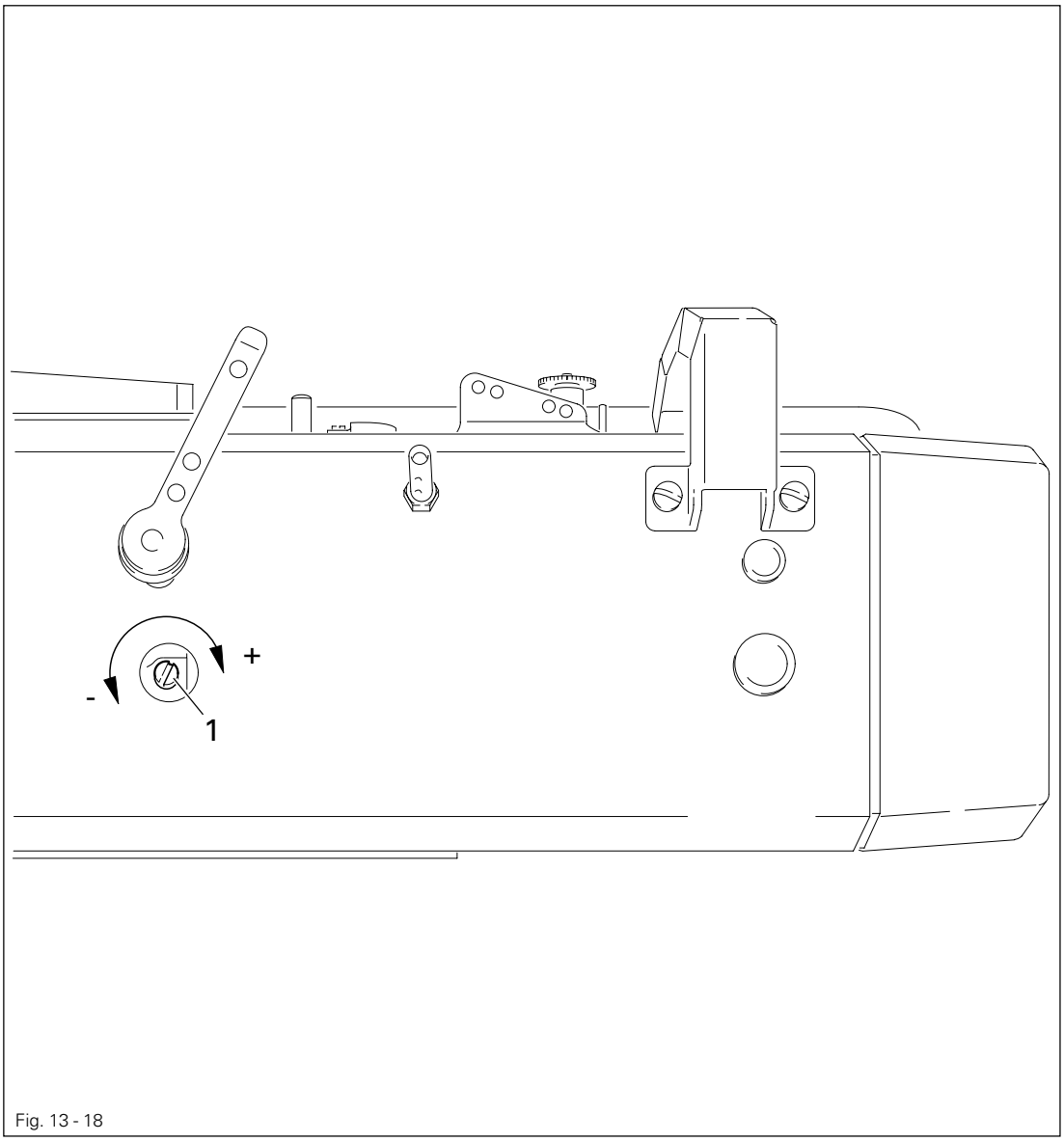

Fig. 13 - 18

- Adjust the roller presser pressure with screw **1** in accordance with the **requirements**.

Screw **1** is underneath a cover.

If the roller presser pressure is too low, the lowering speed of the roller presser can be increased with parameter "**202**", see **Chapter 13.07 Parameter settings.**

13.04.18 Re-engage safety coupling

The coupling **1** is set by the manufacturer. When the thread jams, the coupling **1** disengages in order to avoid damage to the hooks.
A description of how to engage the coupling follows.

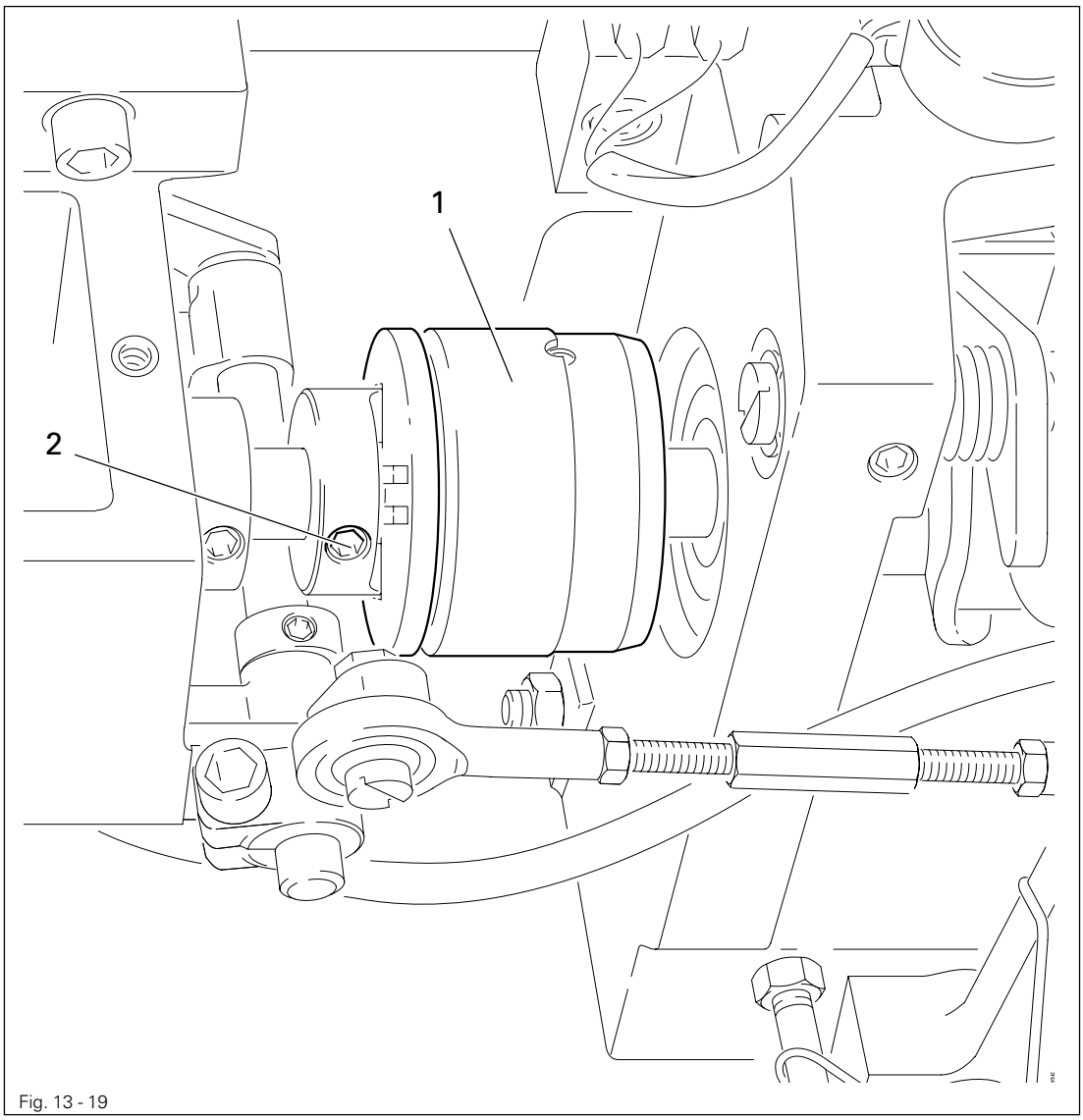

Fig. 13 - 19

- Remove jammed thread.
- Hold coupling **1** with screw **2** and turn the balance wheel, until you feel coupling **1** snap back into place again.

13.05 Adjusting the thread trimmer -900/61

13.05.01 Preadjusting the control cam

Requirements

1. With the needle bar at BDC, the recess **3** must be pointing downwards vertically.
2. The control cam **1** must be touching the retaining collar **4** on the left.

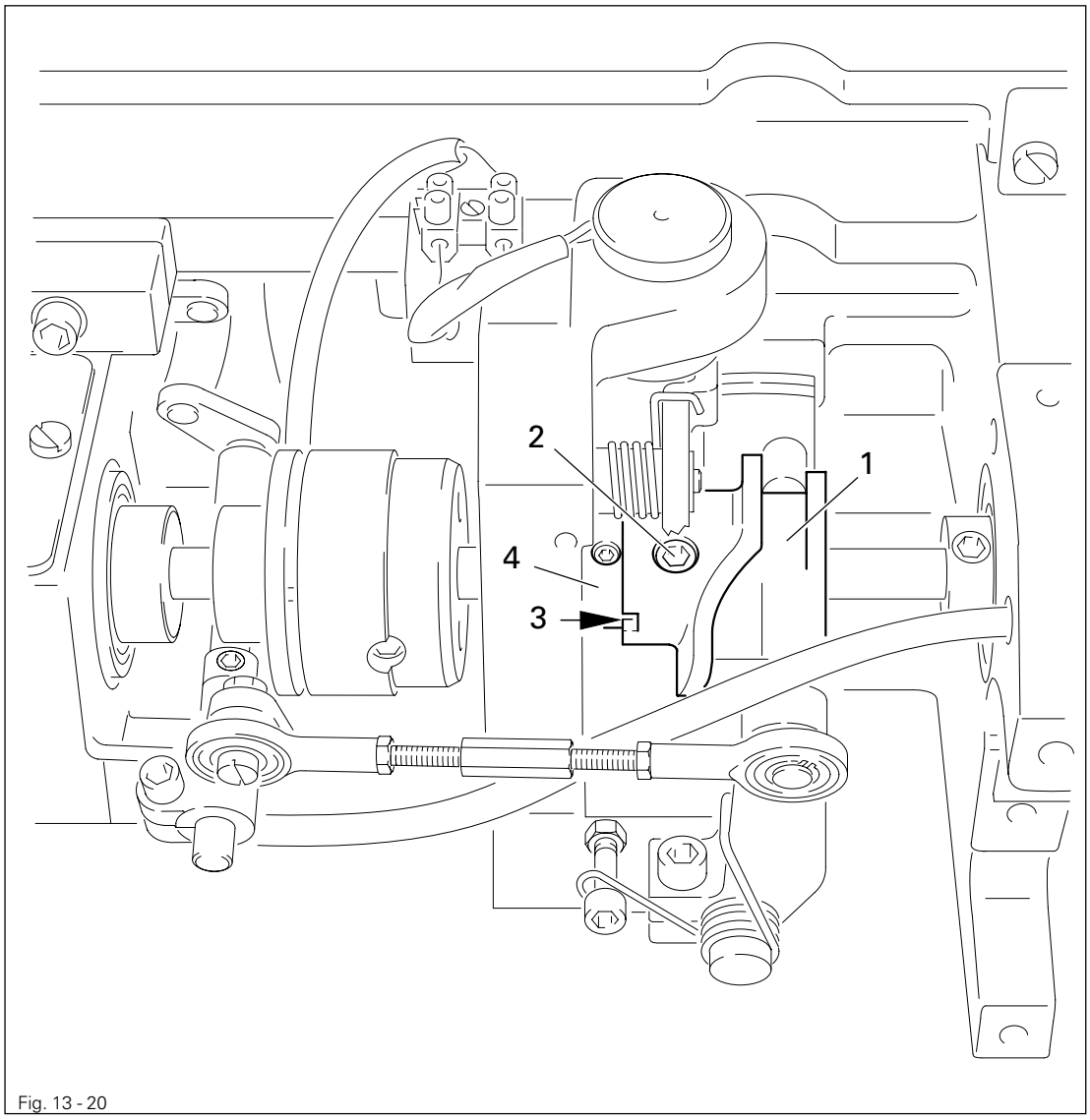

Fig. 13 - 20

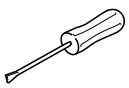

- Position the needle bar at BDC.
- Turn or move the control cam **1** (screws **2**) in accordance with the **requirements**.

13.05.02 Roller lever

Requirements

1. With the roller lever **6** in resting position and the needle bar at TDC, there must be a clearance of **0.3 mm** between roller **7** and control cam **8**.
2. When the thread trimmer is on and the needle bar is at BDC, roller **7** must be in the middle of the recess in control cam **8**.

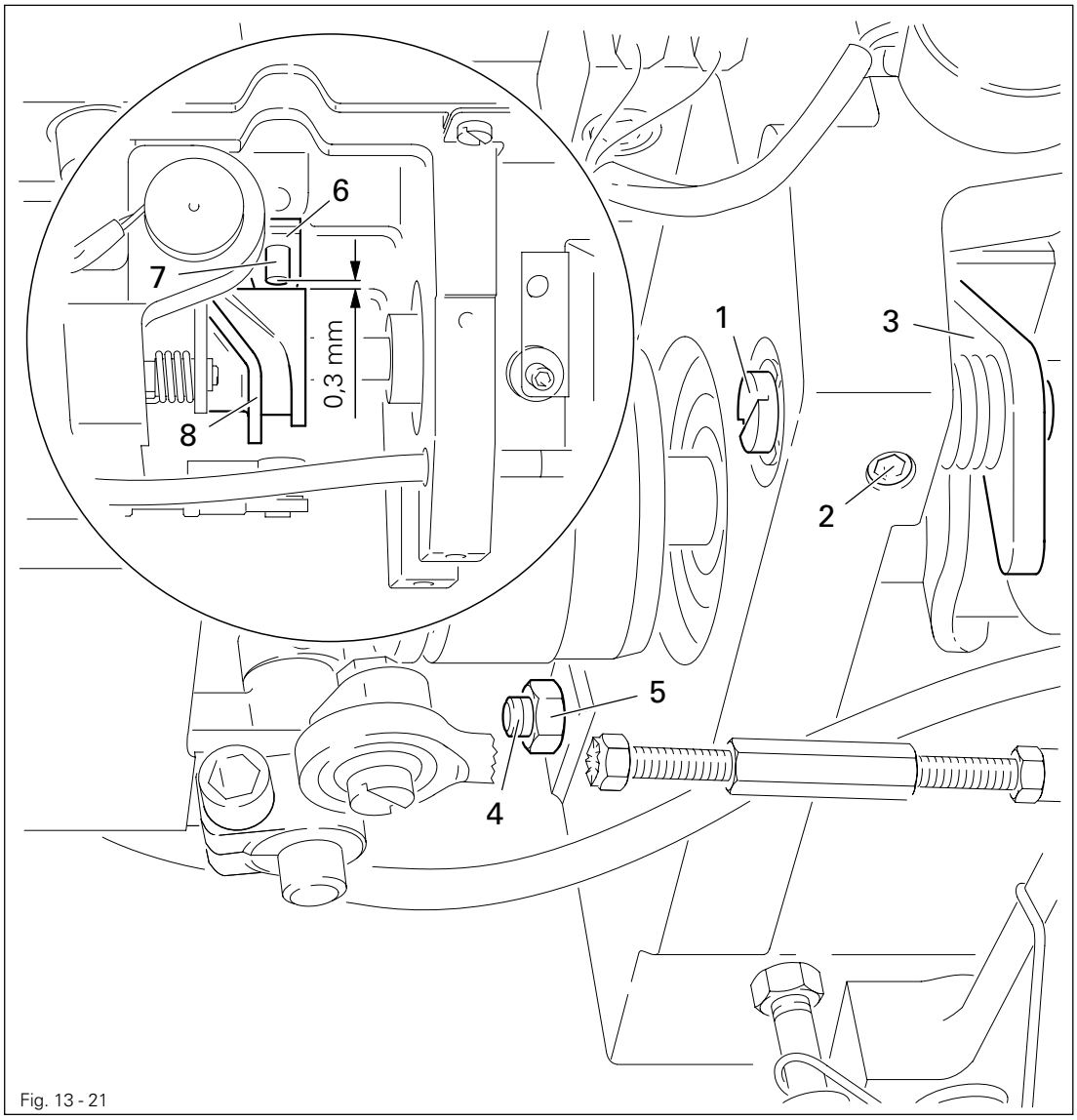

Fig. 13 - 21

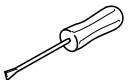

- Position the needle bar at TDC.
- Bring the thread trimmer to resting position.
- Move eccentric **1** (screw **2**) in accordance with **requirement 1**.
- Position the needle bar at BDC and disengage latch **3**.
- Turn screw **4** (nut **5**) in accordance with **requirement 2**.

13.05.03 Engaging solenoid

Requirement
With the roller lever **4** engaged and the engaging solenoid activated, there must be a clearance of approx. **1 mm** between latch **1** and roller lever **4**.

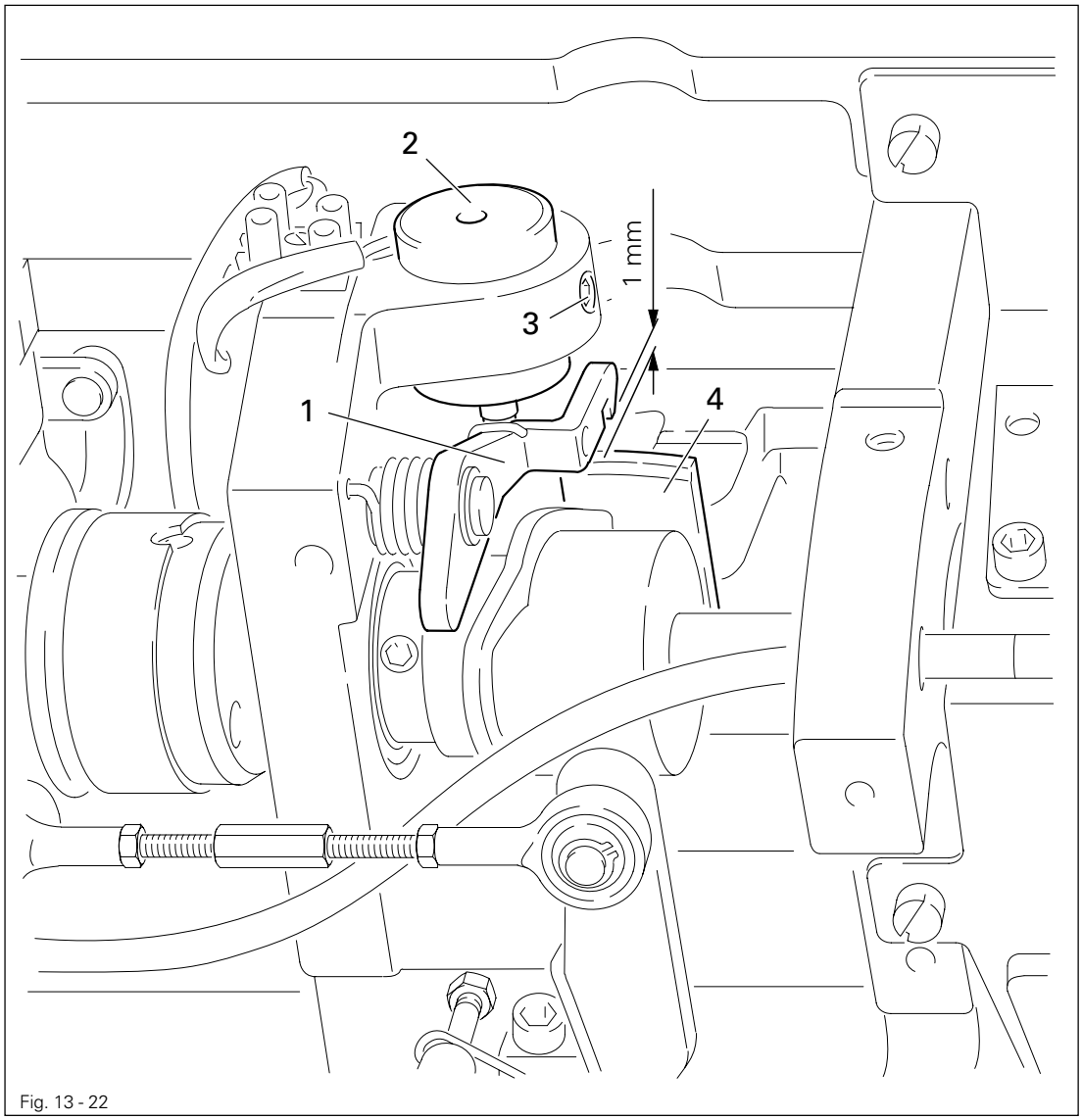

Fig. 13 - 22

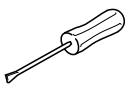

- Disengage latch **1** and push the engaging solenoid up as far as possible.
- Move the solenoid housing **2** (screw **3**) in accordance with the **requirement**.

13.05.04 Actuating lever

Requirement
With the thread trimmer in resting position, the right hand side of the actuating lever **3** must be flush with the right side of control cam **4**.

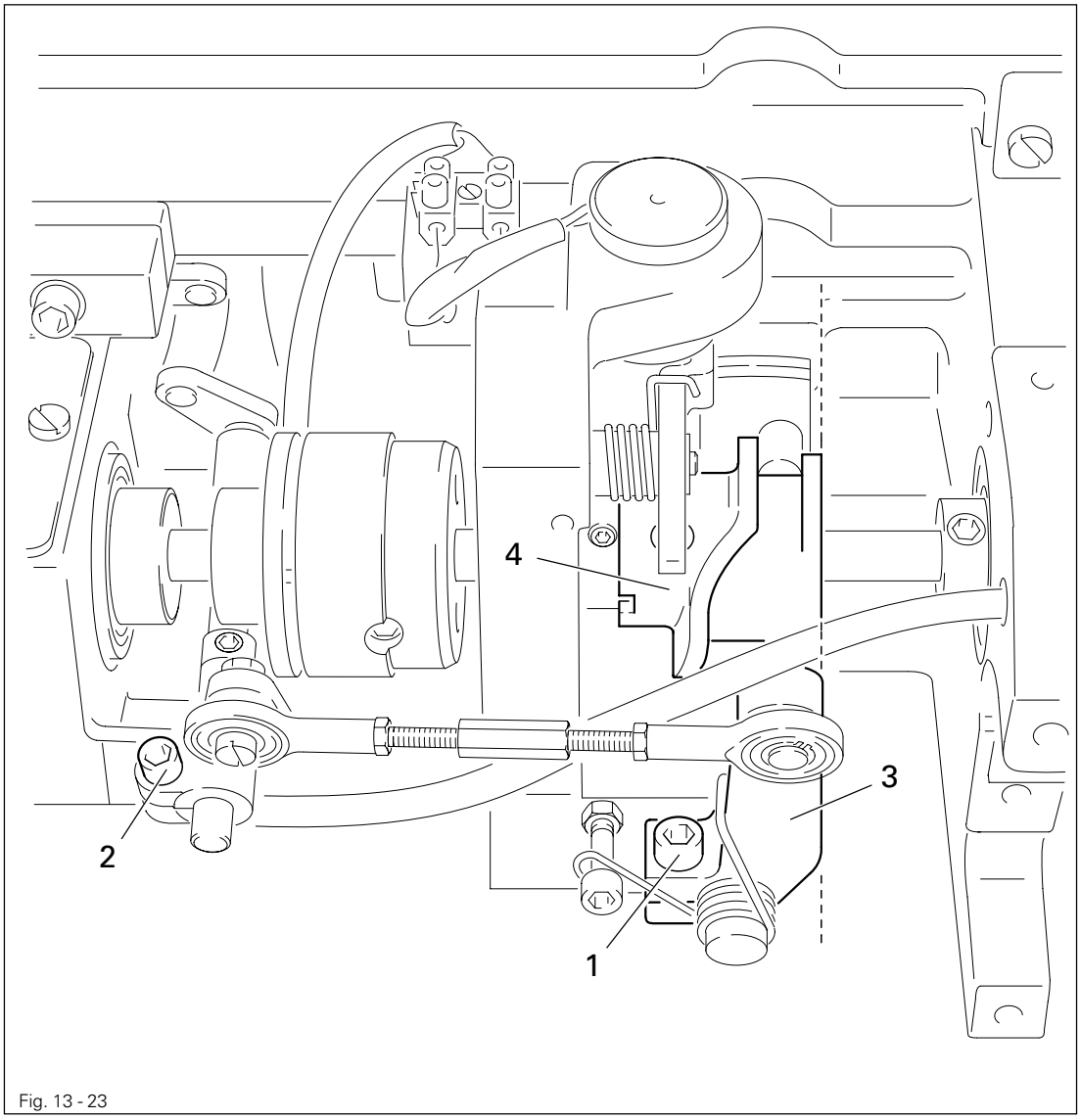

Fig. 13 - 23

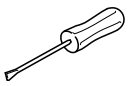

- Loosen screws **1** and **2**.
- Move the actuating lever **3** in accordance with the **requirement**.
- Tighten screw **1**.
- Slightly tighten screw **2**.

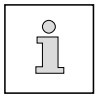

Screw **2** remains slightly tightened for further adjustments.

13.05.05 Connecting rod

Requirement
The distance between the centers of the two ball joints of the connecting rod **1** must be **100 mm**.

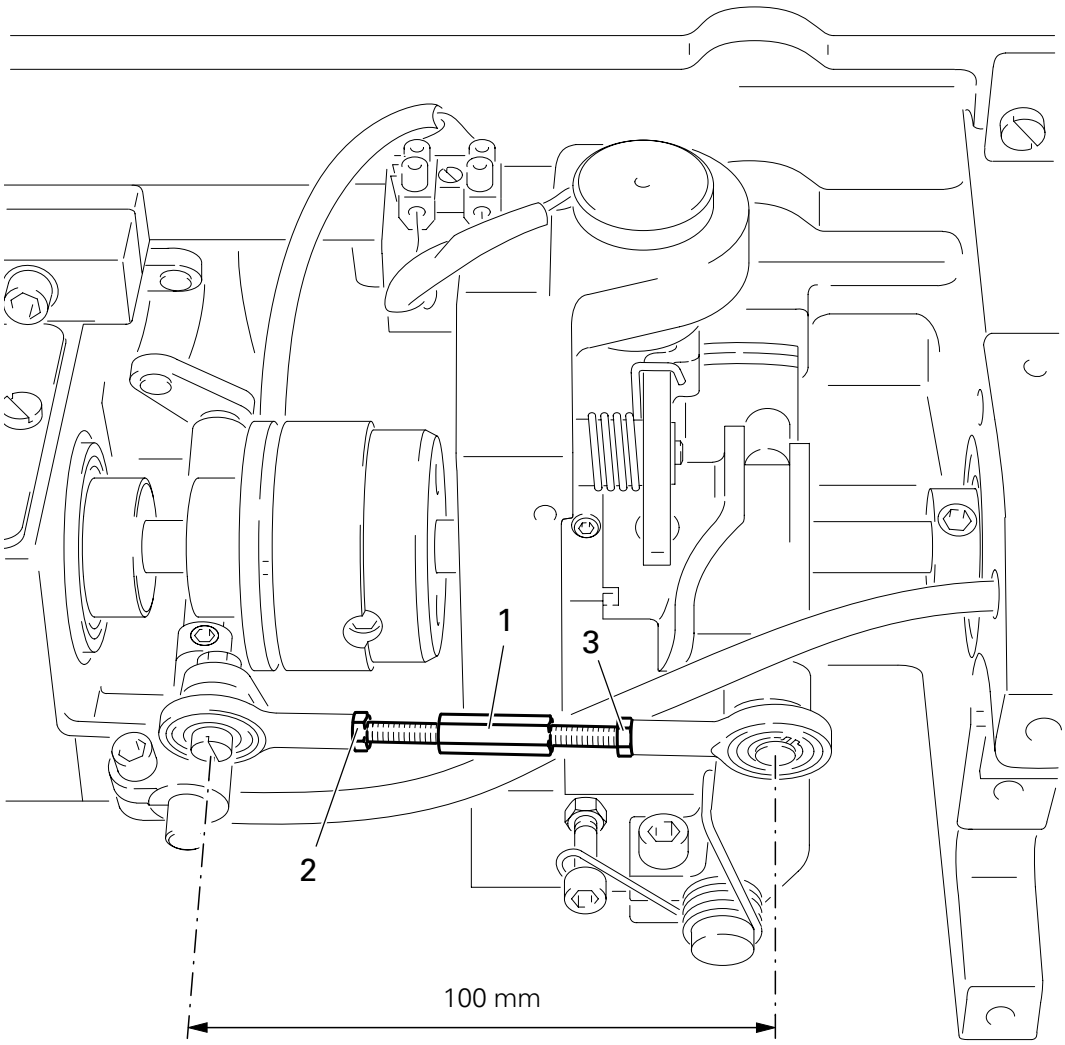

Fig. 13 - 24

- Turn connecting rod **1** (nuts **2** and **3**, right and left handed threads) in accordance with the **requirement**.

13.05.06 Thread-catcher height

Requirement
The bottom edge of the thread catcher **3** must be **0.8 mm** above the bobbin case **4**.

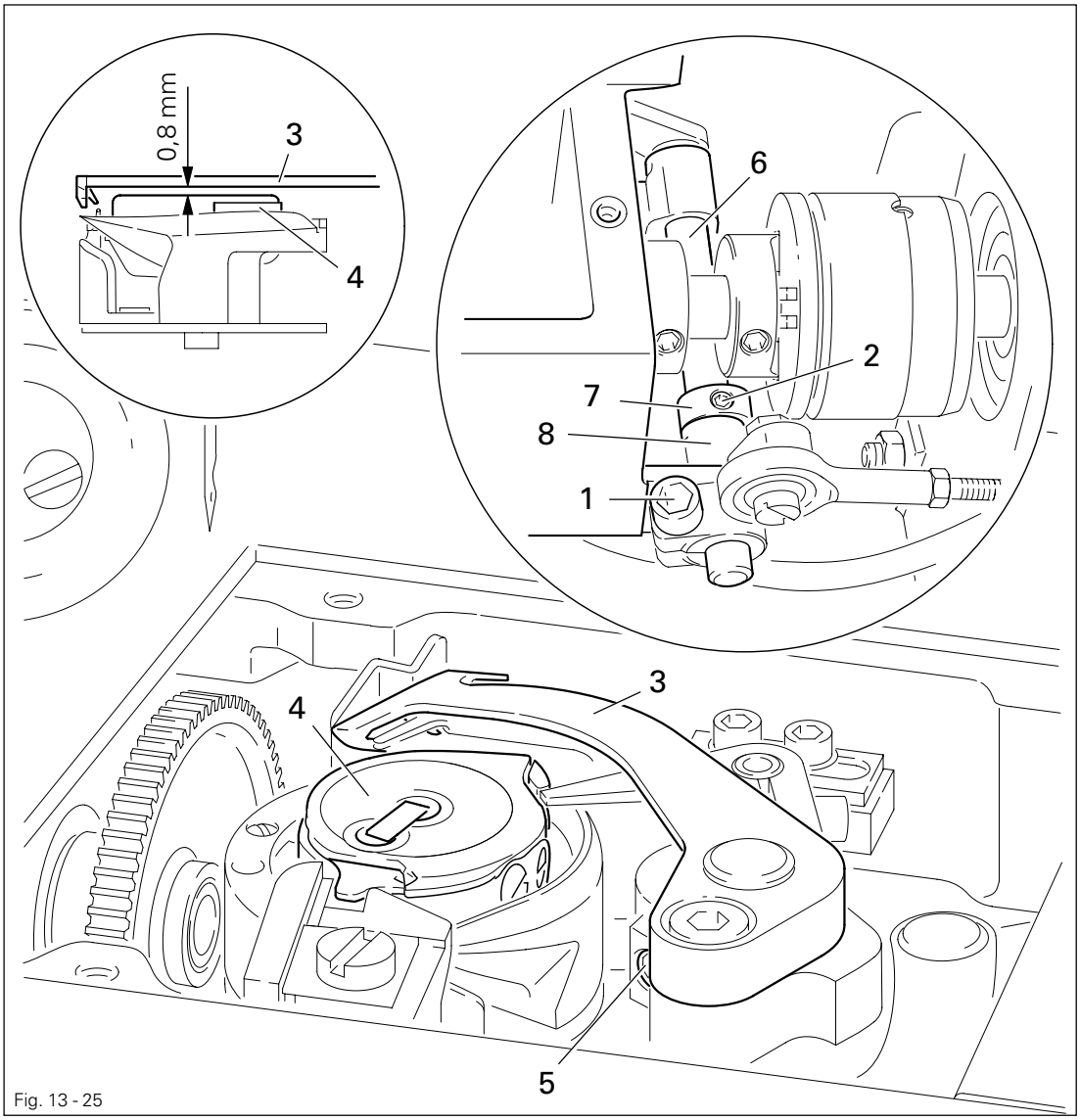

Fig. 13 - 25

- Loosen screws **1** and **2**.
- Position thread catcher **3** over the middle of the bobbin case **4**.
- Move the thread catcher **3** (screw **5**) in accordance with the **requirement**.
- Find the vertical play of shaft **6**, bring retaining collar **7** to rest against bearing **8** and tighten screw **2**.

Screw **1** remains loosened for further adjustments.

13.05.07 Thread-catcher position

Requirement
With the thread trimmer in resting position, the edges of the thread catcher **1** and knife **6** must be flush (see arrow).

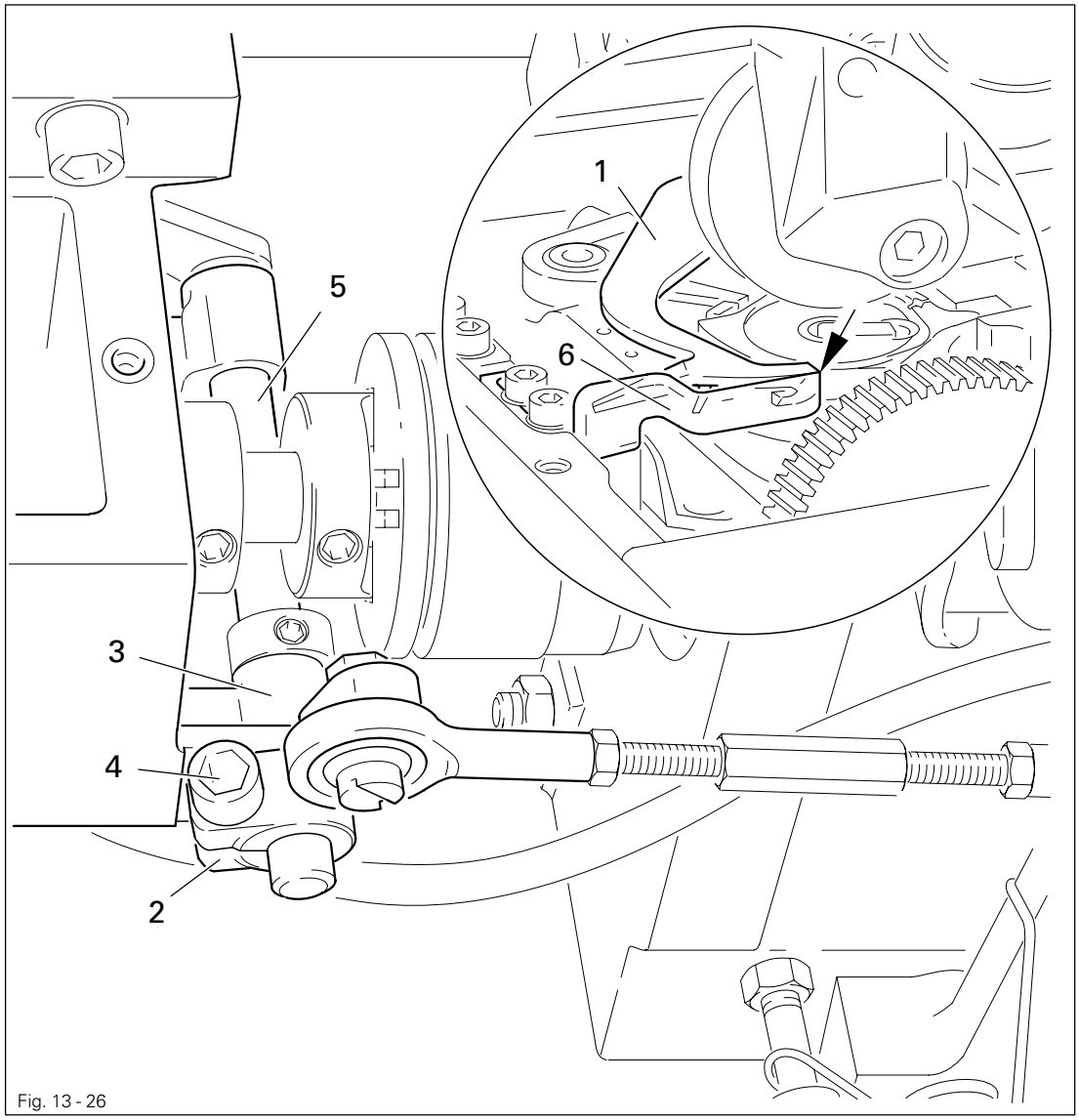

Fig. 13 - 26

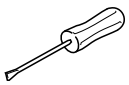

- Position the thread trimmer in resting position.
- Turn the thread catcher **1** in accordance with the **requirement**.
- Bring crank **2** to rest against the bearing case **3** and tighten screw **4**, taking care to ensure that the shaft **5** exhibits neither vertical play nor binding.

13.05.08 Knife pressure

Requirement
When the point of the thread catcher **2** is **4 mm** from the front edge of the knife **3**, the knife **3** must be lightly touching the thread catcher **2**.

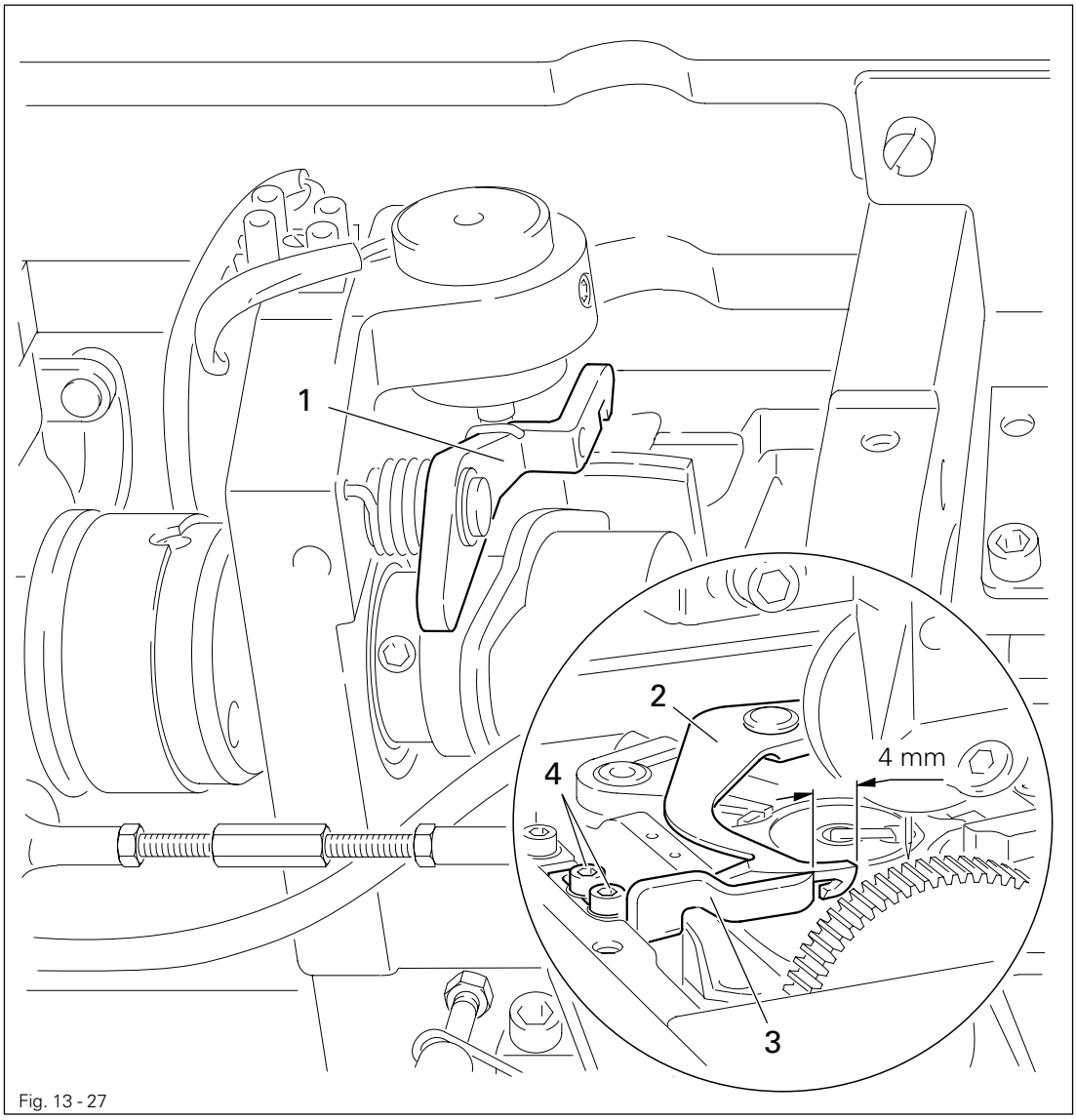

Fig. 13 - 27

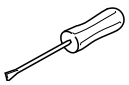

- Disengage latch **1**.
- Position the thread catcher **2** in front of the front edge of the knife by turning the handwheel **4 mm**.
- Move the knife **3** (screws **4**) in accordance with the **requirement**.

13.05.09 Bobbin-thread clamp spring

Requirements

The clamp spring **1** must

1. not be pressed back during the thread catcher motion,
2. reliably clamp the bobbin thread after trimming and
3. not hinder the removal and insertion of the bobbin case.

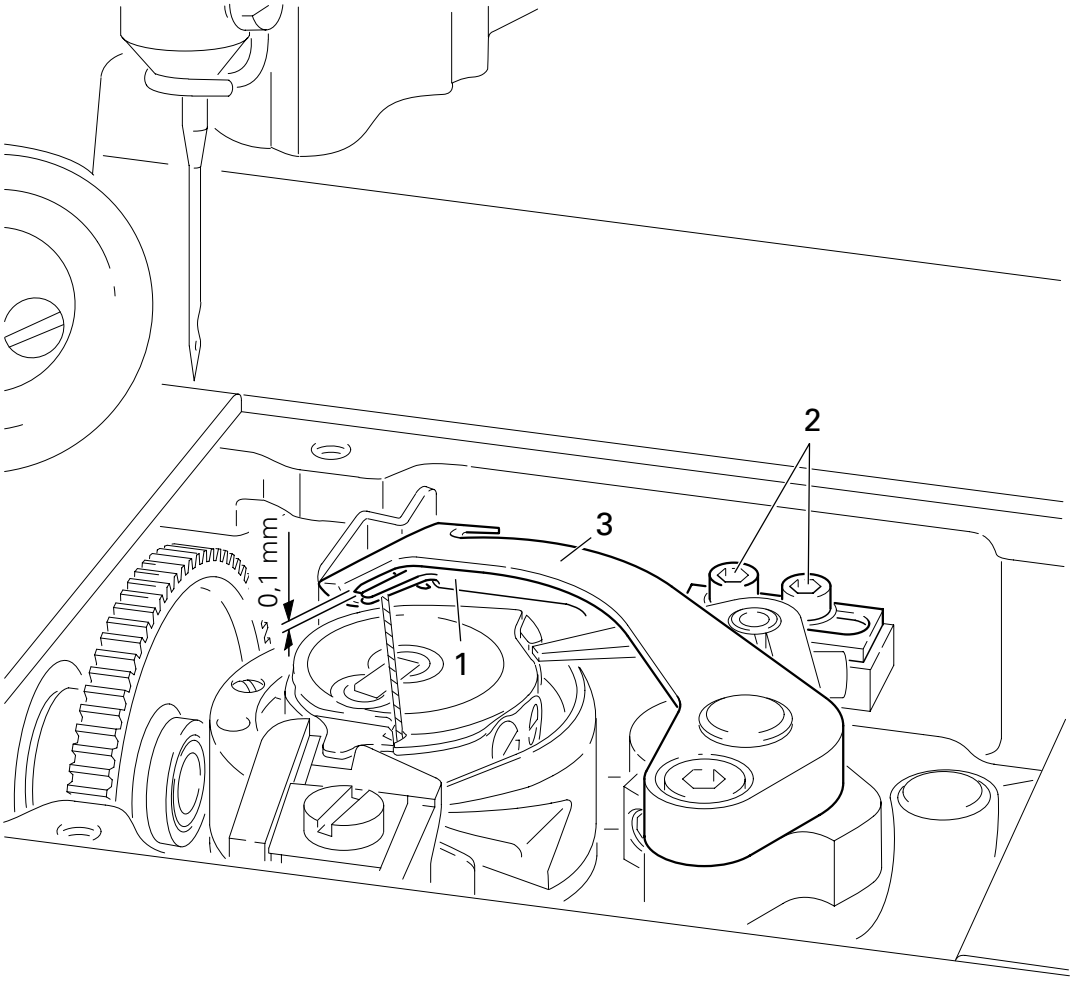

Fig. 13 - 28

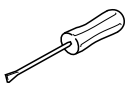

- Bring the thread trimmer to resting position.
- Move the clamp spring **1** (screws **2**) in such a way that the clamp lips are as close to the inner wall and the front edge of the thread catcher **3** as possible.
- By bending the clamp spring **1**, adjust its height so that it is approx. **0.1 mm** from the bottom of the thread catcher **3** and the bobbin thread is held reliably.

13.05.10 Control cam final adjustment

Requirement
The cutting process must be just completed when the take-up lever is at TDC.

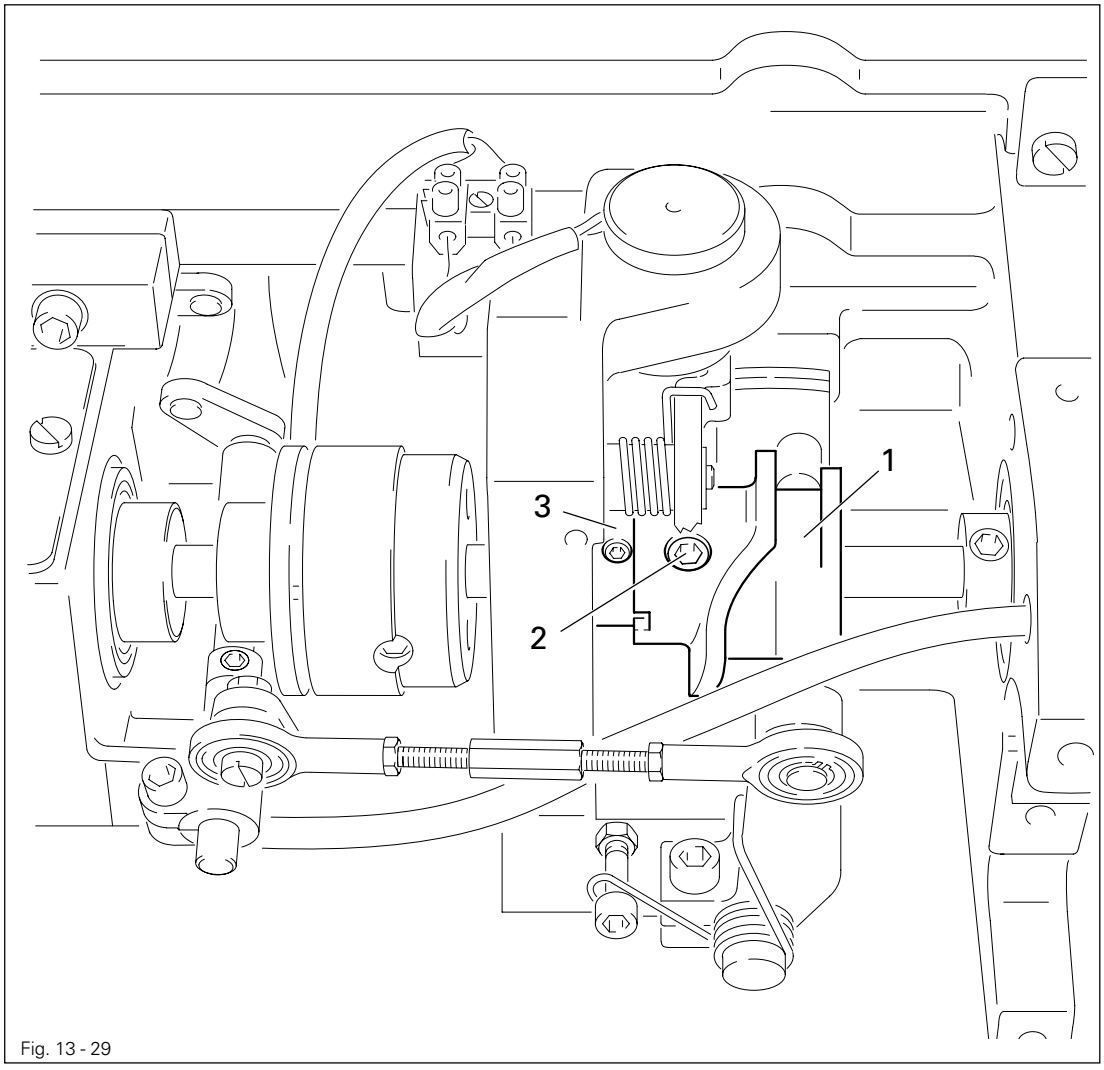

Fig. 13 - 29

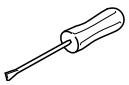

- Disengage the latch and bring the take-up lever to TDC.
- Turn the control cam **1** (screws **2**) in accordance with the **requirement** while ensuring that the control cam **1** is touching the retaining collar **3**.

13.05.11 Manual cutting test

Requirements

1. The thread catcher **2** must not push the bobbin thread in front of it during its forwards movement.
2. At the front point of reversal of the thread catcher **2**, the bobbin thread must be approx. **2 mm** behind the lug of the thread catcher.
3. After completion of the cutting process, the needle and bobbin threads must be cut reliably and the bobbin thread must be clamped.

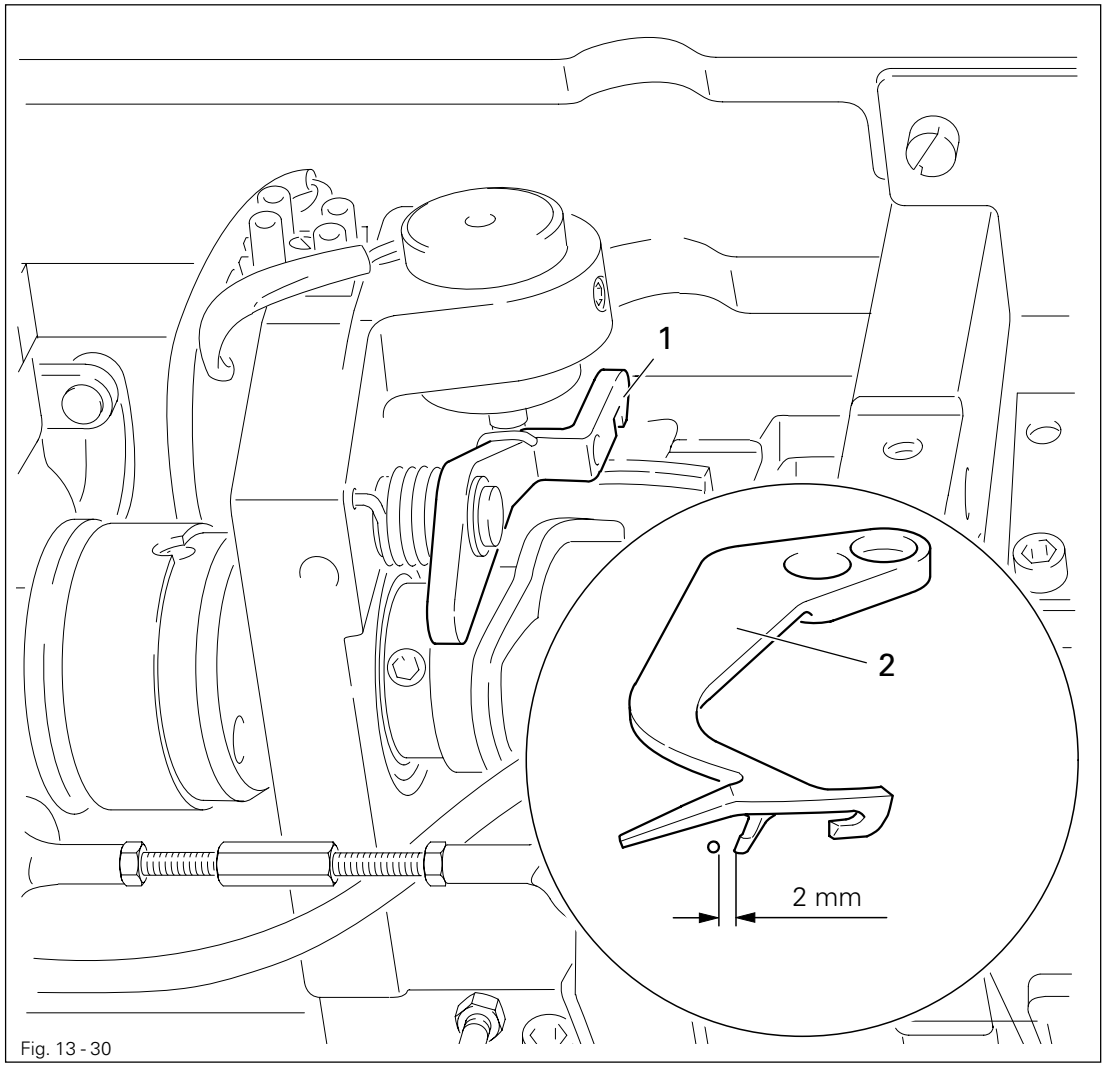

Fig. 13 - 30

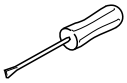

- Sew a few stitches.
- Turn off the on/off switch.
- Disengage latch **1**.
- Carry out the cutting process by turning the handwheel.
- Check **requirement 1**. If necessary, readjust the thread catcher in accordance **with chapter 13.05.06 Thread-catcher height**.
- Check **requirement 2**. If necessary, readjust the thread catcher in accordance **with chapter 13.05.07 Thread-catcher position**.
- Check **requirement 3**. If necessary, readjust the bobbin-thread clamp spring in accordance **with chapter 13.05.09 Bobbin-thread clamp spring**.

13.05.12 Tension release (during trimming process)

Requirement
With the solenoid **1** activated, the tension disks **4** must be at least **0.5 mm** apart.

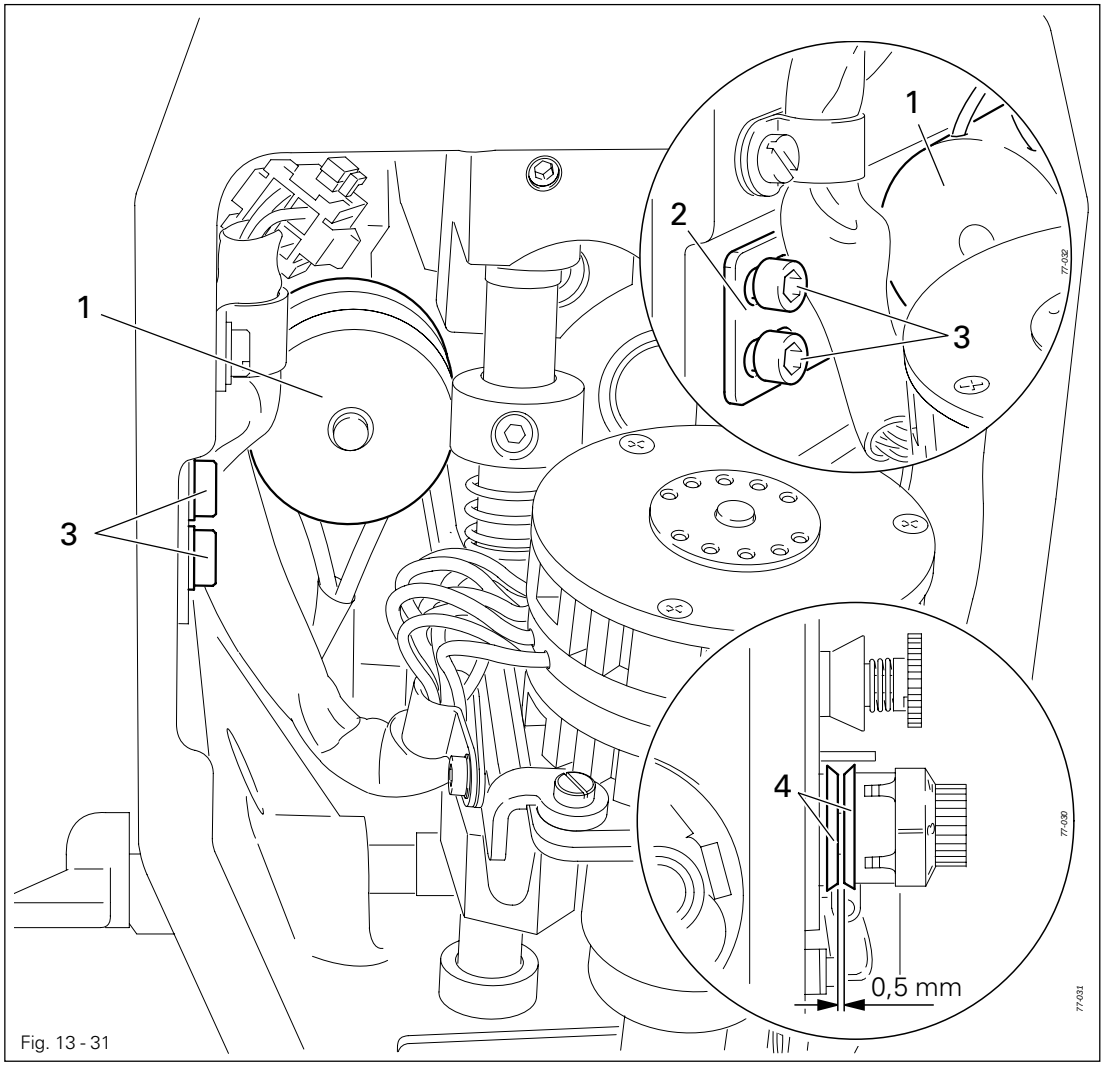

Fig. 13 - 31

- Operate solenoid **1**.
- Adjust solenoid holder **2** (screws **3**) in accordance with the **requirement**.

The service functions can be used to set the point of time for the tension release, see **Chapter 13.07 Parameter settings**.

13.06 Adjusting the bobbin thread supply monitor -926/06

(only on the PFAFF 1521)

Requirement

When the bobbin reflection surface is aligned with the transmission and receiver unit, the LED on the amplifier must light up and the voltage must be as high as possible.

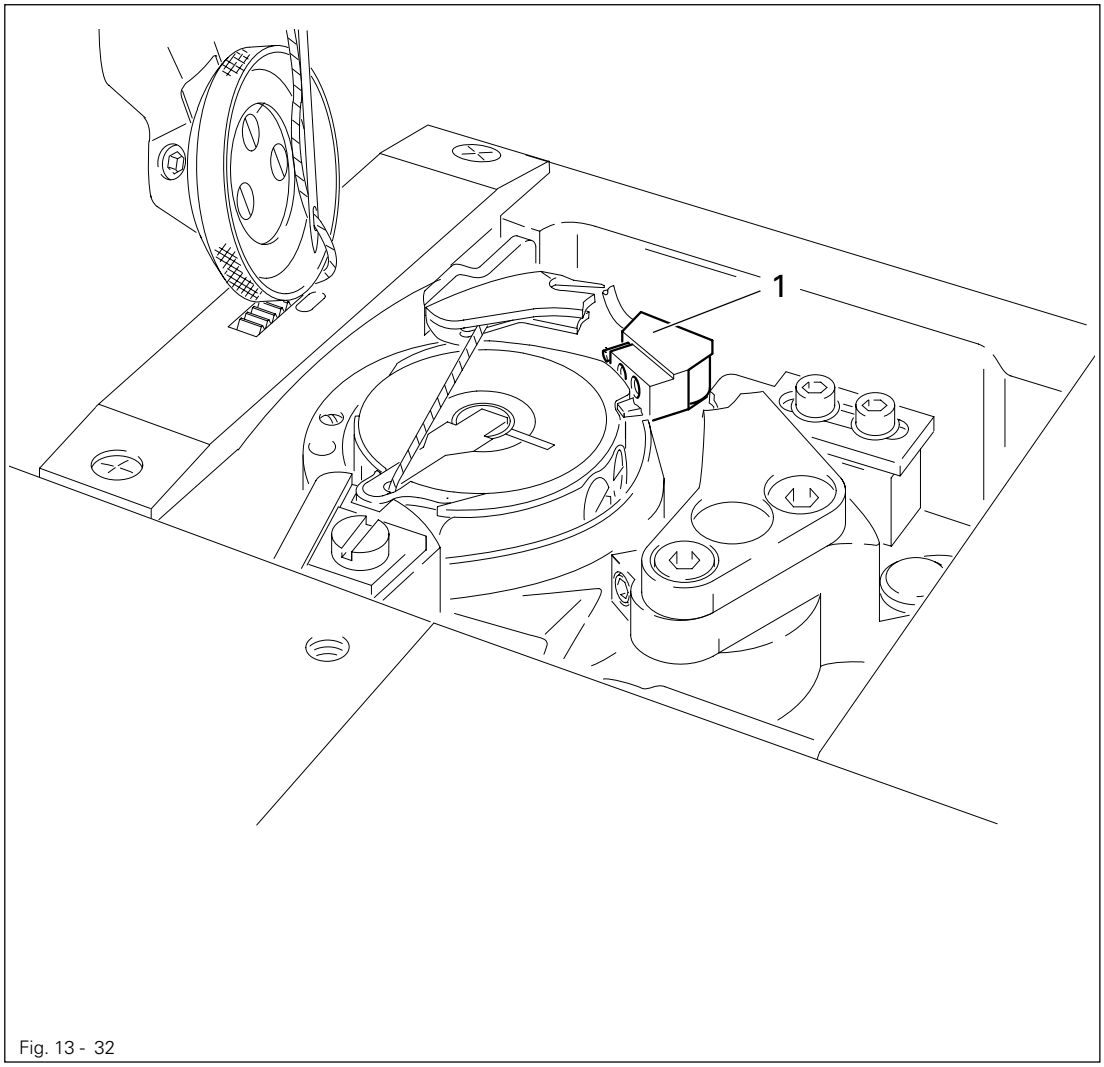

Fig. 13 - 32

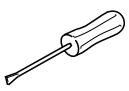

- Wind the thread around the centre part of the bobbin without covering the bobbin reflection surface.
- Set the bobbin into the hook.
- Connect the multimeter (measuring range DC 6.5 V) to the measuring jacks of the amplifier. Switch on the unit.
- Set the needle at t.d.c. and, by slowly unwinding the bobbin thread, align the bobbin reflection surface with the transmission and receiver unit **1** until the LED on the amplifier lights up.
- By bending the transmission and receiver unit **1**, align it so that the voltage is at its highest.

13.07 Parameter settings

13.07.01 Parameter input example

- Switch on the machine

2 x TE SPEED

- Select input mode by pressing **TE/Speed** key twice.

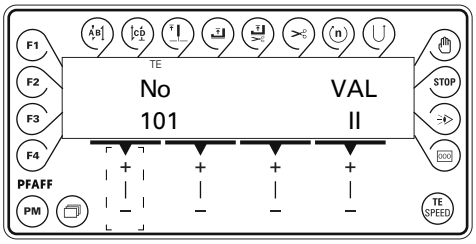

No

- Select parameter group "500" by pressing the corresponding **+/- key.**

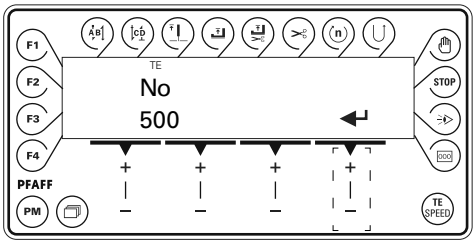

↵

- Confirm selection by pressing the corresponding **+/- key**.
- Enter the code number, see **Chapter 9.09 Entering/changing the code number**.

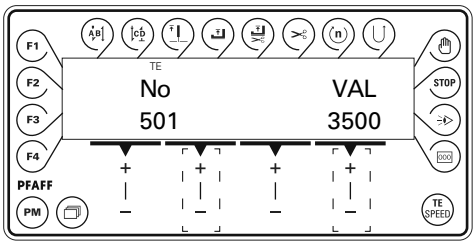

No

- Select the desired parameter, e.g. "501" by pressing the corresponding **+/- key.**

VAL

- Set the desired parameter value by pressing the corresponding **+/- key.**

TE SPEED

- By pressing the **TE/speed** key, the value is taken over and the machine changes to the sewing mode.

13.07.02 List of parameters



The operator has free access to the "100" parameters. Parameters "200" - "800" can only be changed after entering a code number and many only be changed by authorised personnel.

Group	Parameter	Description	Setting range	Setvalue
1	101	Start backtack, pedal-controlled (I = OFF, II = ON)		I
	102	Reversing (I = OFF, II = ON)		I
	103	Stitch placement (I = OFF, II = ON)		I
	104	Bobbin thread monitoring (0 = OFF, I = reverse counter, 2 = thread monitor)	0 - 2	0
	105	Bobbin thread reverse counter	0 - 99999	12000
	106	Remaining bobbin thread counter	0 - 999	100
	108	Display software version of main processor	0329/…	
	109	Display software version of stepping motor processor	0305/…	
	110	Display software version of the control panel	V001H201	
	111	Display software version of sewing motor processor	V35	
	112	Key tone of the control panel I = off, II = on		II
	113	Horn with section change I = off, II = on		I
2	201	Machine configuration 3 = 521, 4 = 521 with sensor	1 - 7	3
	202	Lowering speed roller presser I = slow, II = quick		I
	203	Allocation key single stitch I = single stitch, II = needle raised		I
	204	Allocation key semi-stitch I = semi-stitch, II = needle raised		I
3	301	Position take-up lever t.d.c.	0 - 127	125

Group	Parameter	Description	Setting range	Setvalue
3	302	Position needle lowered	0 - 127	20
	303	Position cutting solenoid "on"	0 - 127	20
	304	Position cutting solenoid "tacting"	0 - 127	100
	305	Position cutting solenoid "off"	0 - 127	120
	306	Reverse position	0 - 127	100
	307	Placement stitch position	0 - 127	7
	308	Position thread tension release	0 - 127	98
4	401	Delay time lifting roller presser	0.01 - 1.50 s	0.02 s
	402	Start delay after lowering roller presser	0.01 - 1.50s	0.15s
	403	Set lift roller presser	0.01 - 0.20s	0.03s
	404	Tact thread cutting solenoid	10 - 50 %	35 %
	405	Thread monitor cleaning time	0.01s - 1.5 s	0.25 s
5	501	Maximum speed	100 - 3500	3500
	502	Speed start backtack	100 - 1500	700
	503	Speed end backtack	100 - 1500	700
	504	Speed soft start	100 - 3500	1500
	505	Soft start stitches	0 - 15	0
6	601	Move stepping motor roller presser and feed wheel		
	602	Display inputs 0123456789ABCDEF 0: Centre position needle (E16) 1: End position needle (E15) 2: Coding intermittent (E14) 3: not assigned (E13) 4: not assigned (E12) 5: not assigned (E11) 6: not assigned (E10) 7: not assigned (E9) 8: not assigned (E8) 9: Bobbin thread error (E7) A: Knee switch (E6) B: Sensor (E5) C: Start-up lock (E4) D: Single stitch key on machine head (E3) E: Semi-stitch key on machine head (E2) F: Reverse stitch key on machine head (E1)		

Group	Parameter	Description	Setting range	Setvalue
6	603	Basic position of the machine drive unit (see Chap. 8.02.04)		8 ±2
	604	Carry out cold start (see Chap. 13.09)		
	605	Stitch formation check by turning the balance wheel		
7	701	P-quota speed controller	1 - 50	30
	702	I-quota speed controller	0 - 100	50
	703	P-quota position controller	1 - 50	20
	704	D-quota position controller	1 - 100	30
	705	Time for position controller	0 - 100	25
	706	P-quota position controller for rest brake	1 - 50	25
	707	D-quota position controller for rest brake	1 - 50	15
	708	Maximum moment for rest brake	0 - 100	0
	709	Minimum machine speed	3 - 64	6
	710	Maximum machine speed	1 - 35	35
	711	Maximum motor speed	1 - 35	35
	712	Positioning speed	3 - 25	16
	713	Acceleration ramp	1 - 50	35
	714	Brake ramp	1 - 50	30
	715	Reference position	0 - 127	20
	716	Time-out	0 - 255	40
	717	Starting current motor	3 - 10	8
	718	Anti-vibration filter	1 - 10	6
	719	Rotation direction allocation	0 - 1	0
	720	Reference position correction	1 - 127	64
8	801	Right of access function group 100	0 - 1	0
	802	Right of access function group 200	0 - 1	1
	803	Right of access function group 300	0 - 1	1
	804	Right of access function group 400	0 - 1	1

Group	Parameter	Description	Setting range	Setvalue
	805	Right of access function group 500	0 - 1	1
	806	Right of access function group 600	0 - 1	1
	807	Right of access function group 700	0 - 1	1
	808	Right of access function group 800	0 - 1	1
	809	Right of access program creation	0 - 1	1
	810	Enter access code	0 - 9999	1500

13.08 Explanation of the error messages

Message	Description
Error 1:	System fault
Error 2:	Sewing motor
Error 3:	Area
Error 4:	End of area
Error 5:	Pedal operated during start
Error 6:	Communication error with stepping motor processor
Error 7:	Ramp end
Error 8:	End position of needle drive not located
Error 9:	Centre position of needle drive not located
Error 10:	Error in stepping motor processor
Error 11:	Stepping motor stepping frequency too high
Error 12:	Error in sewing start deflection
Error 14:	Incorrect program number (larger than 99)
Error 15:	Incorrect area number
Error 16:	Memory full
Error 17:	Incorrect stitch length
Error 19:	Interface to external controller
Error 20:	Incorrect controller
Error 21:	Power unit overload (24 V)
Error 22:	Mains voltage
Error 23:	Power supply 24V too high/too low

13.09 Warning messages

Message	Description
Warning 2	Bobbin thread error

13.10 Carrying out a cold start

- Switch on the machine.

2 x TE SPEED

- Press the **TE/Speed** key twice to select the input mode.

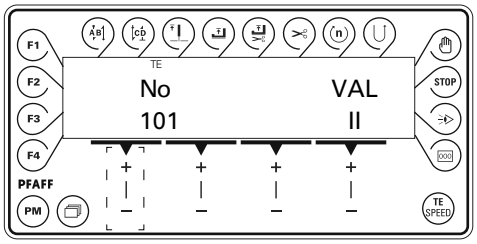

No

- Select parameter group "600" by pressing the corresponding **+/- key**.

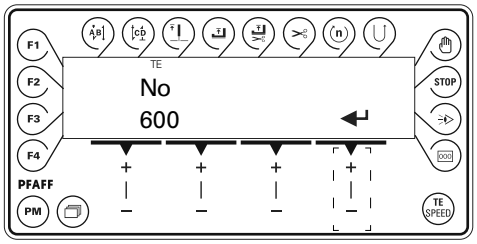

↵

- Confirm selection by pressing the corresponding **+/- key**.
- Enter the code number, see **Chapter 9.09 Entering/changing the code number**.

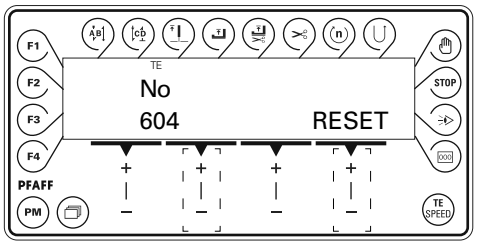

No

- Select parameter "604" by pressing the corresponding **+/- key.**

RESET

- Carry out cold start by pressing the corresponding **+/- key.**
- Switch off the machine.



After a cold start all programmed values are reset to their status at the time of delivery.

13.11 Internet update of the machine software

The machine software can be updated with PFAFF flash programming. For this purpose the PFP boot program and the appropriate control software for the machine type must be installed on a PC. To transfer the data to the machine, the PC and the machine control unit must be connected with an appropriate null modem cable (part no. 91-291 998-91).

The PFP boot program and the control software of the machine type can be downloaded from the PFAFF-homepage using the following path:
www.pfaff-industrial.de/de/service/download/steuerungssoftware.html

To update the machine software carry out the following steps:

While the machine software is being updated, no setting up, maintenance or adjustment work may be carried out on the machine!

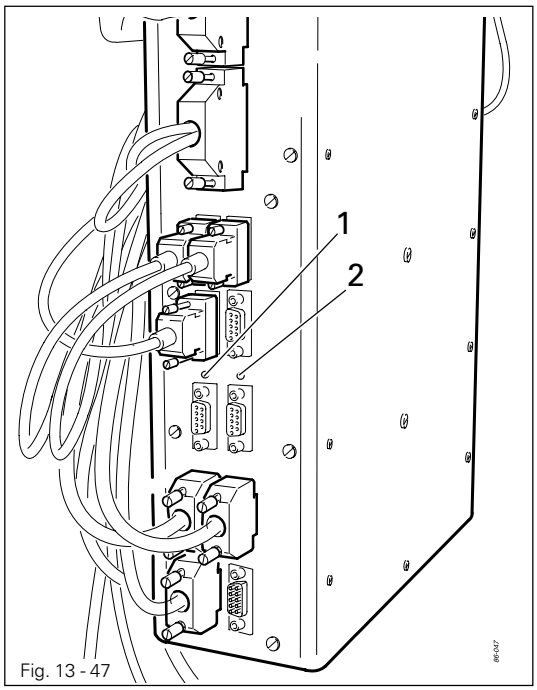

Fig. 13 - 47

- Switch off the machine.
- Connect the PC (serial interface or appropriate USB-adapter) and the machine control unit (RS232). To do so disconnect the plug of the control panel.
- Switch on the PC and start the PFP boot program.
- Select the machine type.
- Press the "programming" button.
- Depending on which software is to be updated, press and hold down boot key 1 or 2 and switch on the machine.
  1 = for machine control unit
  2 = for stepping motors
- Press the "OK" button.
  The software update is carried out, the update progress is shown on the bar display of the PFP boot program.

- During the up-dating procedure the machine must not be switched off.
- When the update has been completed, switch off the machine and end the PFP boot program.
- End the connection between the PC and the machine control unit and reconnect the control panel to the machine control unit.
- Switch on the machine.
  A plausibility control is carried out and, if necessary, a cold start.

More information and assistance is at your disposal in the file "PFPHILFE.TXT", which can be called up from the PFP boot program by pressing the "help" button.

14 Wearing parts

This list indicates the most important wearing parts.
You can request a detailed parts list for the complete machine under parts number 296-12-18 701.

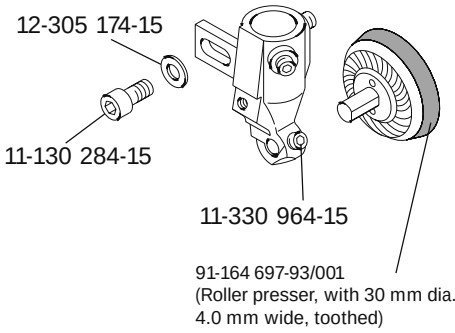

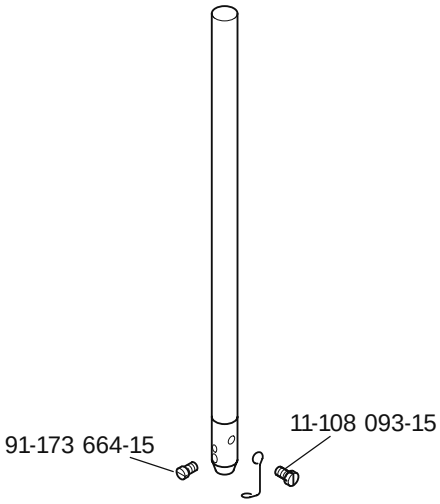

PFAFF 521, 1521

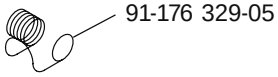

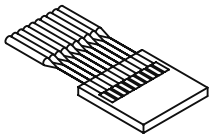

PFAFF 521,
System 134

PFAFF 1521
System 134-35

PFAFF 521
91-164 900-91

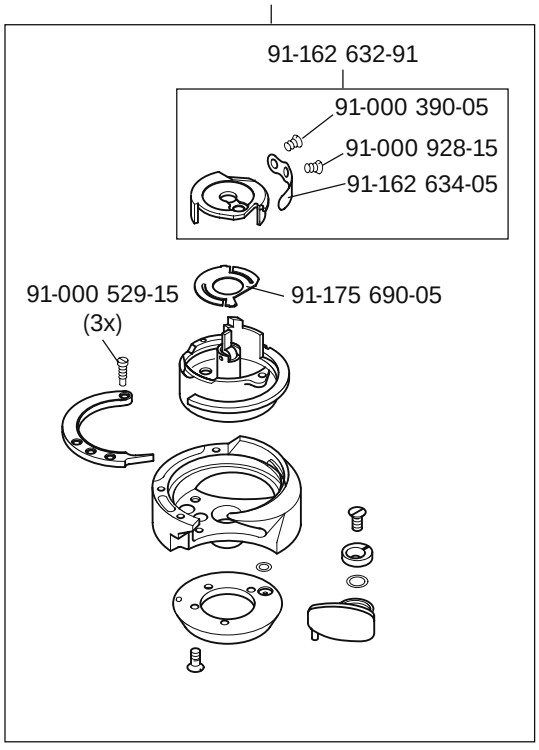

PFAFF 1521
91-164 920-91

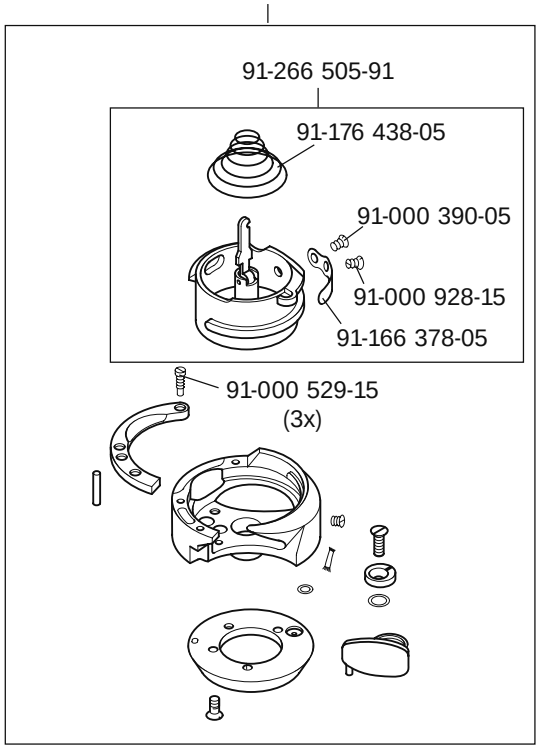

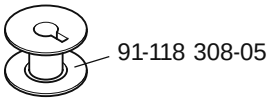

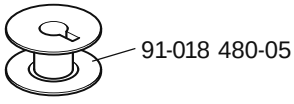

For sub-class -900/61

PFAFF 521

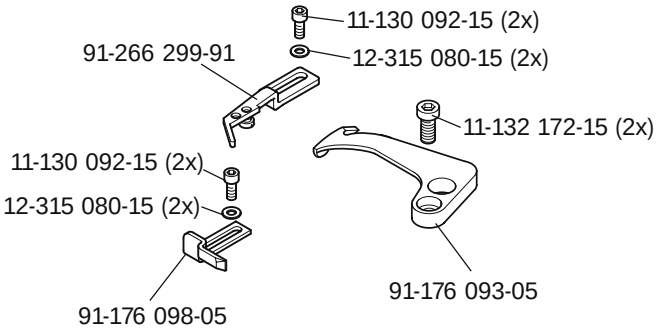

PFAFF 1521

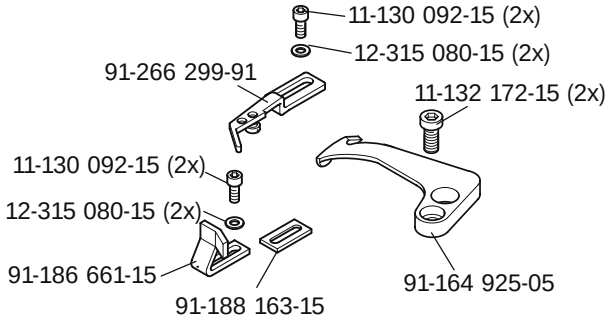

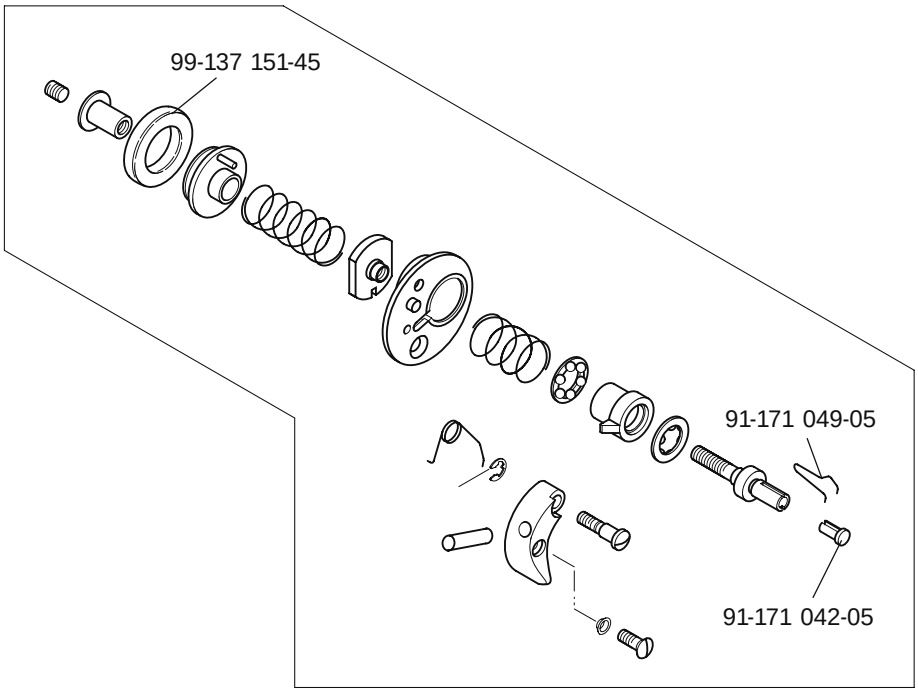

15 Circuit diagrams

Reference list for circuit diagrams

A1	Controller Quick P320MS (P321MS)
A2	Control panel S2
A14	Sewing head identification (OTE)
DX355	Needle pendulum (only with P321MS)
H1	Sewing lamp
H20	LED Stitch counter
M1	Sewing motor
M2	Stepping motor feed wheel
M3	Stepping motor roller presser
M4	Stepping motor needle (only with P321MS)
Q1	Main switch
S1	Pedal set value transmitter
S20	Knee switch (program)
S21	Manual reverse feed control switch
S22	Single stitch switch
S23	Needle position change switch
S24	Start inhibitor switch
X1	Mains plug
X1A	RS232 – interface 1, Control panel S2
X1B	VSS, Sewing head identification (OTE)
X3	Incremental transmitter (sewing motor)
X4A	Stepping motor feed wheel
X4B	Stepping motor roller presser
X5	Inputs
X6A	Stepping motor needle (only with P321MS)
X6B	RS232 – interface 2 (only with P321MS)
X8	Sewing motor
X11A	CAN interface
X11B	Pedal set value transmitter
X13	Outputs
Y1	910/..Automatic presser foot lift
Y2	900/..Thread trimmer
Y3	Thread tension
Y4	Thread tension
Y6	Bobbin thread supply monitor (-926/24)

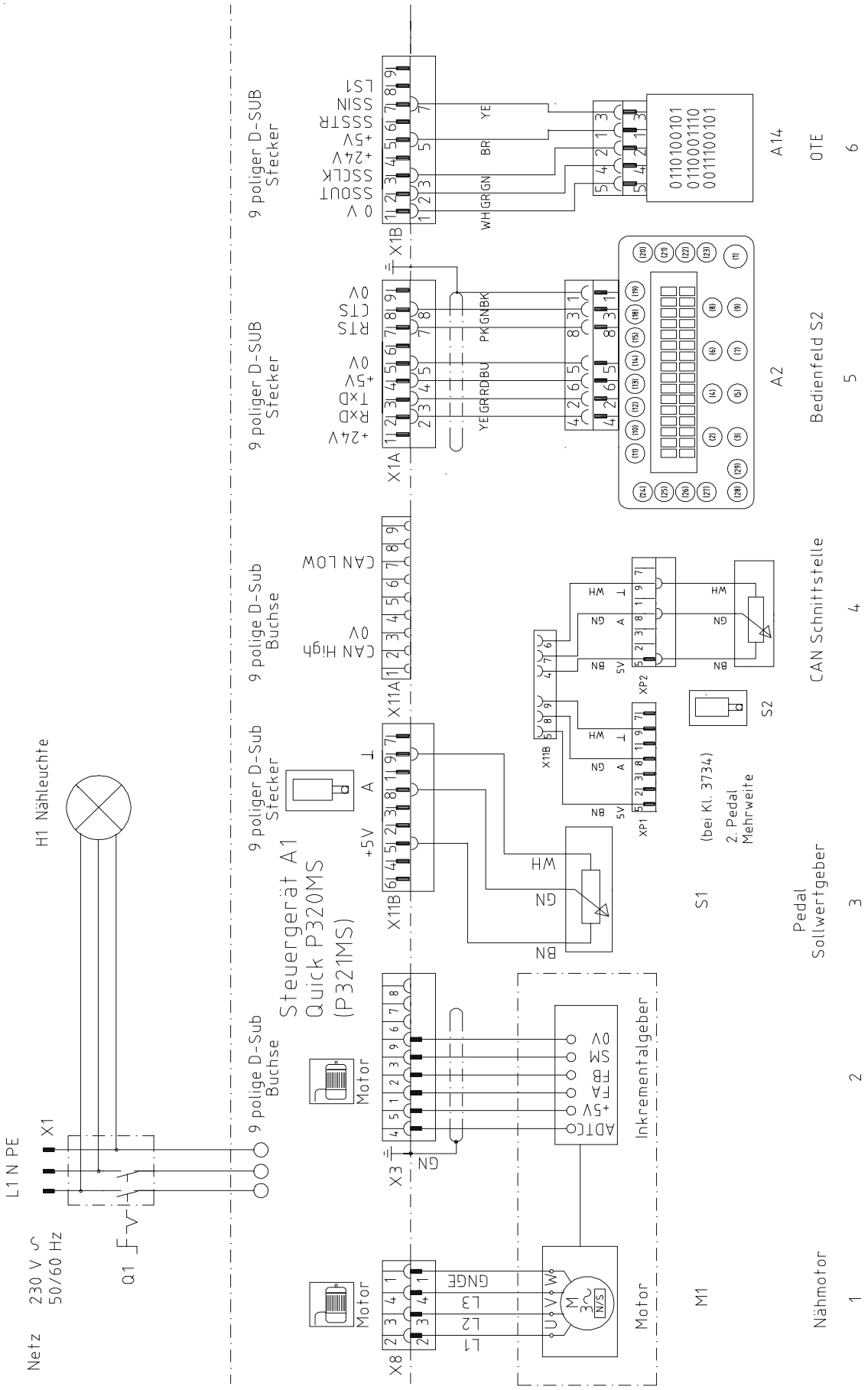
Netz
230 V ~
50/60 Hz
L1 N PE
X1
Q1
H1 Nähleuchte
9 polige D-Sub Buchse
Steuergerät A1
Quick P320MS
(P321MS)
9 poliger D-Sub Stecker
9 polige D-Sub Buchse
9 poliger D-SUB Stecker
Motor
X8
X3
X11B
X11A
X1A
X1B
Inkrementalgeber
ADTC
+5V
FA
FB
SM
0V
M1
Nähmotor
1
2
Pedal Sollwertgeber
3
S1
(bei Kl. 3734)
2. Pedal Mehrweite
S2
CAN Schnittstelle
4
Bedienfeld S2
5
A2
A14
OTE
6
0 V
SSOUT
SSCLK
+24V
+5V
SSSTR
SSIN
LS1
+24V
RxD
TxD
+5V
0V
RTS
CTS
0V
CAN High
0V
CAN LOW
0110100101
0110001110
0011100101

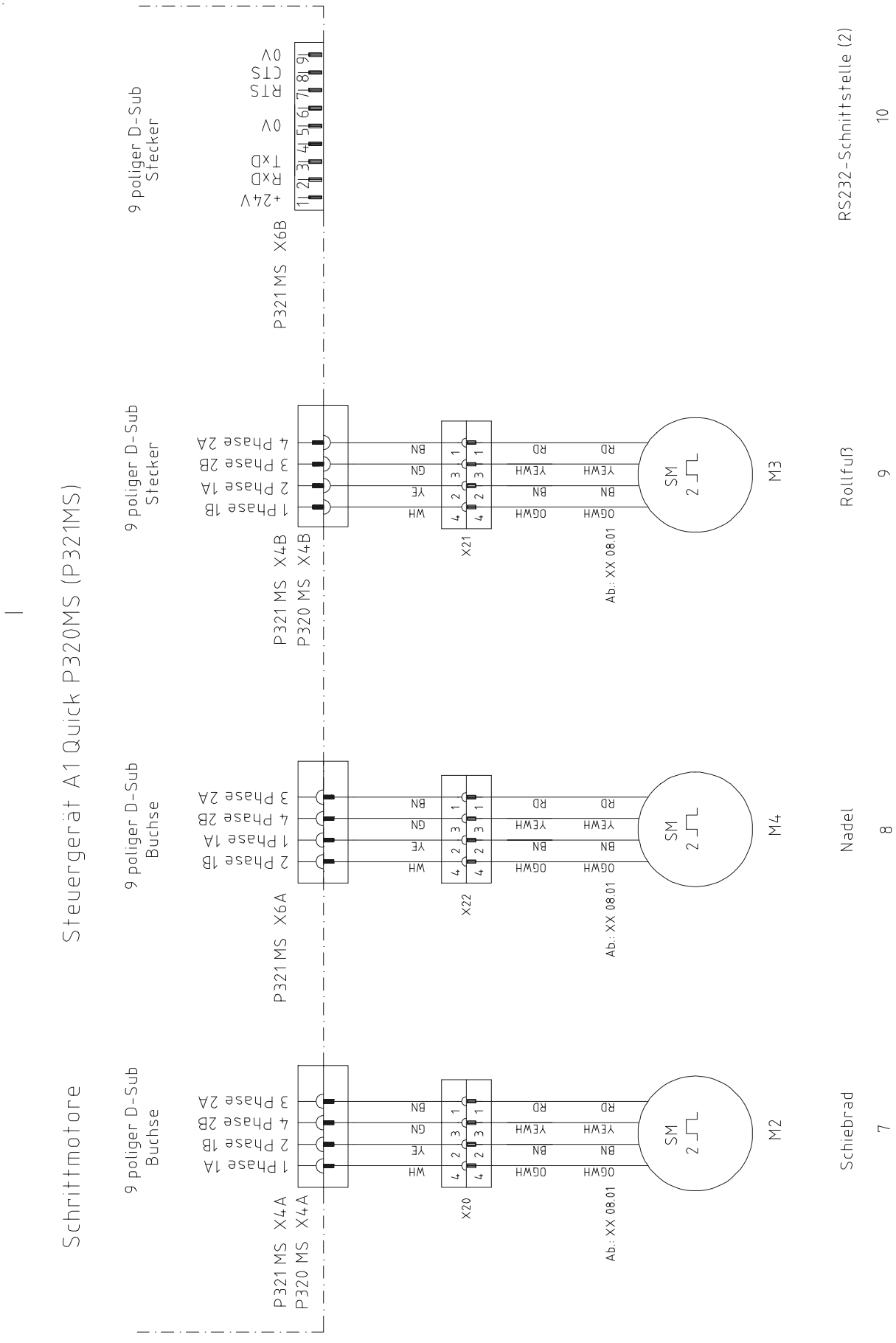
Steuergerät A1 Quick P320MS (P321MS)
Schrittmotore
9 poliger D-Sub Buchse
9 poliger D-Sub Stecker
P321 MS X4A
P320 MS X4A
P321 MS X6A
P321 MS X4B
P320 MS X4B
P321 MS X6B
1 Phase 1A
2 Phase 1B
3 Phase 2A
4 Phase 2B
+24V
TxD
0V
RTS
CTS
0V
X20
X22
X21
WH
YE
GN
BN
RD
YEWH
BN
OGWH
Ab.: XX 08.01
SM
2
M2
M4
M3
Schiebrad
Nadel
Rollfuß
RS232-Schnittstelle (2)
7
8
9
10

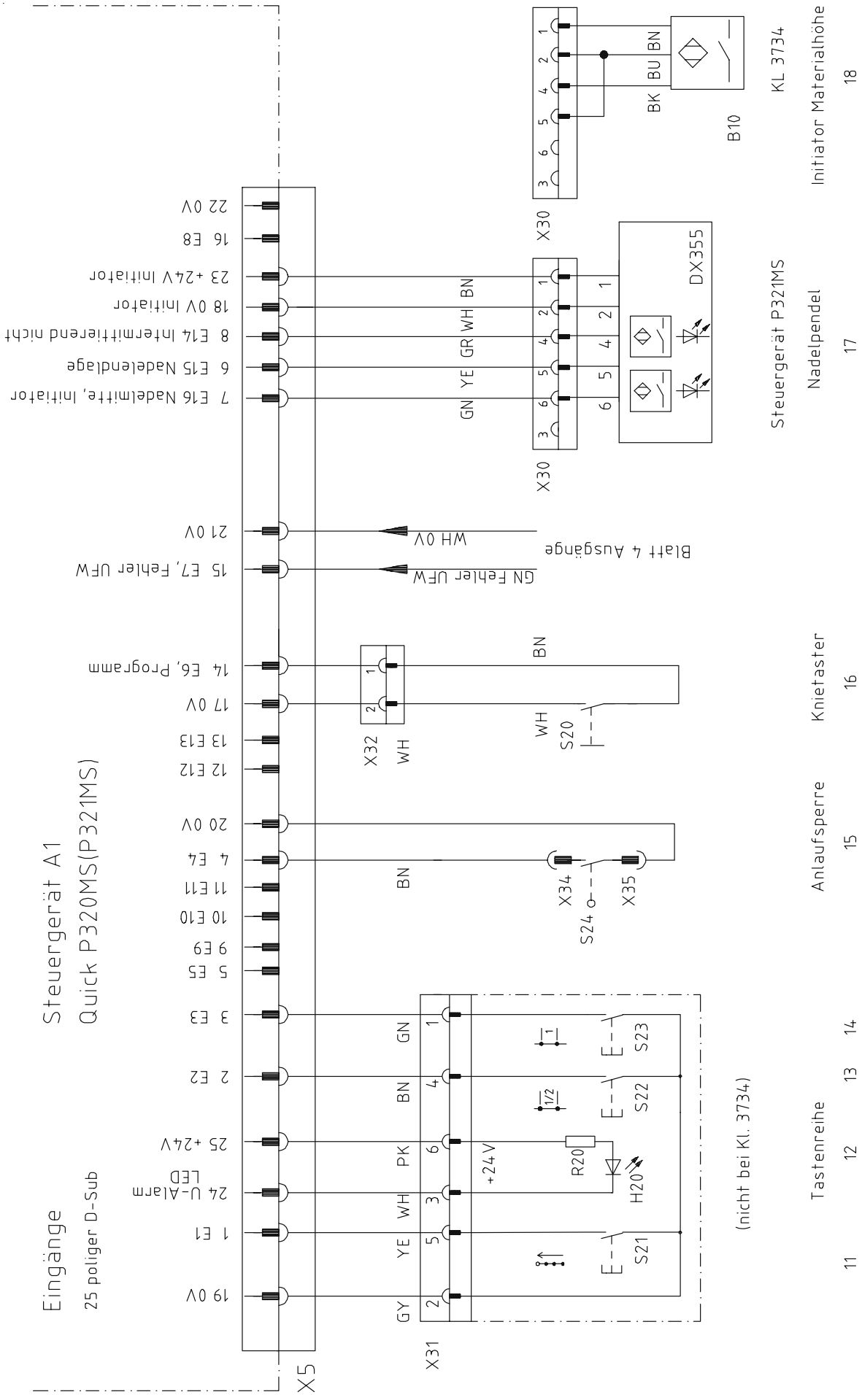
Eingänge
25 poliger D-Sub
Steuergerät A1
Quick P320MS(P321MS)
19 0V
1 E1
24 U-Alarm LED
25 +24V
2 E2
3 E3
5 E5
9 E9
10 E10
11 E11
4 E4
20 0V
12 E12
13 E13
17 0V
14 E6, Programm
15 E7, Fehler UFW
21 0V
7 E16 Nadelmitte, Initiator
6 E15 Nadelendlage
8 E14 Intermittierend nicht
18 0V Initiator
23 +24V Initiator
16 E8
22 0V
X5
X31
GY
YE
WH
PK
BN
GN
+24V
R20
H20
S21
S22
S23
(nicht bei Kl. 3734)
Tastenreihe
11
12
13
14
X32
WH
S20
Knietaster
16
X34
X35
S24
Anlaufsperre
15
GN Fehler UFW
WH 0V
Blatt 4 Ausgänge
X30
DX355
Steuergerät P321MS
Nadelpendel
17
BK
BU
B10
KL 3734
Initiator Materialhöhe
18

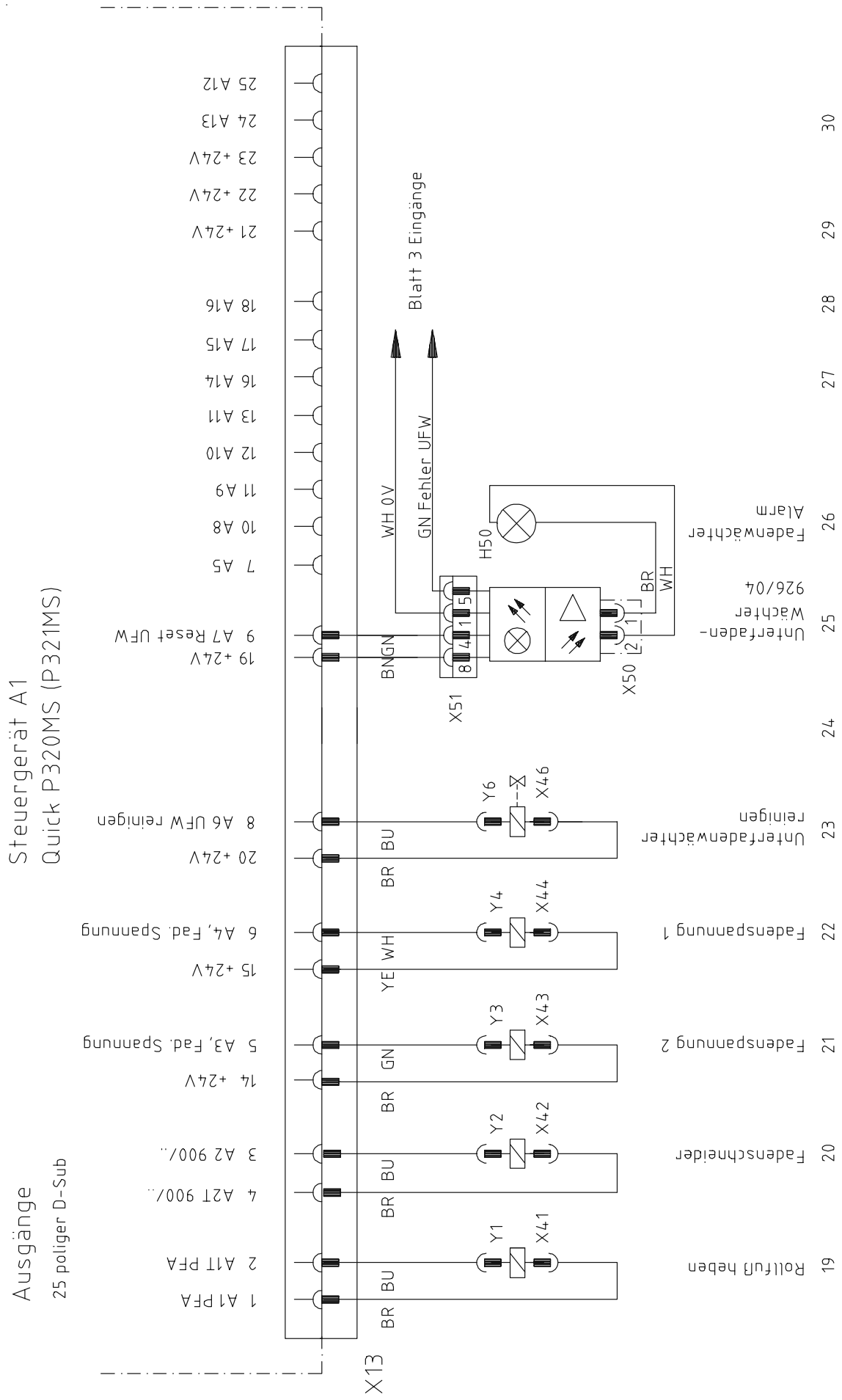
Steuergerät A1
Quick P320MS (P321MS)
Ausgänge
25 poliger D-Sub
X13
1 A1 PFA
2 A11 PFA
3 A2 900/..
4 A2T 900/..
5 A3, Fad. Spannung
6 A4, Fad. Spannung
7 A5
8 A6 UFW reinigen
9 A7 Reset UFW
10 A8
11 A9
12 A10
13 A11
14 +24V
15 +24V
16 A14
17 A15
18 A16
19 +24V
20 +24V
21 +24V
22 +24V
23 +24V
24 A13
25 A12
BR BU
BR BU
BR BU
BR GN
YE WH
BR BU
BNGN
WH 0V
GN Fehler UFW
Blatt 3 Eingänge
X51
X50
H50
BR
WH
Y1
Y2
Y3
Y4
Y6
X41
X42
X43
X44
X46
Rollfuß heben
Fadenschneider
Fadenspannung 2
Fadenspannung 1
Unterfadenwächter reinigen
Unterfaden-Wächter 926/04
Fadenwächter Alarm
19
20
21
22
23
24
25
26
27
28
29
30

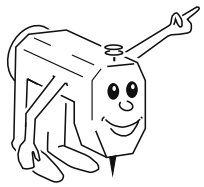

Notes

PFAFF® Industrial



Europäische Union
Wachstum durch Innovation – EFRE



PFAFF Industriesysteme
und Maschinen AG

Hans-Geiger-Str. 12 - IG Nord
D-67661 Kaiserslautern

Phone: +49-631 200-0
Fax: +49-631 17202
E-mail: info@pfaff-industrial.com

Hotlines:
Technical service: +49-175/2243-101
Application consultance: +49-175/2243-102
Spare-parts hotline: +49-175/2243-103

Printed in Germany