PFAFF® Industrial

# 5483

## ADJUSTMENT MANUAL

This Adjustment Manual is valid for machines from the following serial numbers onwards:
# 2 492 189 →

296-12-18 994/002
Justieranleitung engl. 07.11

The reprinting, copying or translation of PFAFF Service Manuals, whether in whole or in part, is only permitted with our previous authorization and with written reference to the source.

PFAFF Industriesysteme
und Maschinen AG

Hans-Geiger-Str. 12 - IG Nord
D-67661 Kaiserslautern

Contents ..... Page


| | | |
|---|---|---|
| 1 | **Adjustment** | **5** |
| 1.01 | Tools, gauges and other accessories for adjusting | 5 |
| 1.02 | Abbreviations | 5 |
| 1.03 | Explanation of the symbols | 5 |
| 1.04 | Control and adjustment aids | 6 |
| 1.05 | Adjusting the basic machine | 7 |
| 1.05.01 | Position of the needle in the needle hole | 7 |
| 1.05.02 | Preliminary adjustment of the needle height | 8 |
| 1.05.03 | Zeroing the bottom feed (on machines with closed gearcase) | 9 |
| 1.05.04 | Zeroing the bottom feed (on machines with open gearcase) | 10 |
| 1.05.05 | Feed driving motion | 11 |
| 1.05.06 | Feed lifting motion | 12 |
| 1.05.07 | Feed lifting height | 13 |
| 1.05.08 | Limiting the stitch length | 14 |
| 1.05.09 | Looper avoiding motion | 15 |
| 1.05.10 | Looper motion | 16 |
| 1.05.11 | Looper height and looper angle | 17 |
| 1.05.12 | Looper-to-needle clearance in sewing direction | 19 |
| 1.05.13 | Looper-to-needle clearance crosswise to sewing direction | 20 |
| 1.05.14 | Final adjustment of the needle height | 21 |
| 1.05.15 | Height of rear needle guard | 22 |
| 1.05.16 | Clearance between rear needle guard and needle | 23 |
| 1.05.17 | Position of the front needle guard (does not apply to all machines) | 24 |
| 1.05.18 | Guard of looper-avoiding-motion eccentric | 25 |
| 1.05.19 | Take- up lever | 26 |
| 1.05.20 | Basic setting of the needle thread regulator and the thread guide | 27 |
| 1.05.21 | Adjustment of the backtacking mechanism (only for machines with -911/..) | 28 |
| 1.05.22 | Spreader drive (only for machines with -911/..) | 29 |
| 1.05.23 | Spreader height (only for machines with -911/..) | 30 |
| 1.05.24 | Spreader motion and spreader to needle clearance (only for machines with -911/..) | 31 |
| 1.05.25 | Functional sewing test (only for machines with -911/..) | 32 |
| 1.05.26 | Looper thread regulator and looper thread take-up | 33 |
| 1.05.27 | Looper thread puller | 34 |

Contents ..... Page


| | | |
|---|---|---|
| 1.05.28 | Clearance between presser foot and needle plate | 35 |
| 1.05.29 | Presser foot pressure | 36 |
| 1.05.30 | Knee lever rest position | 37 |
| 1.05.31 | Knee lever play | 38 |
| 1.05.32 | Knee lever stop | 39 |
| 1.06 | Adjusting the thread-trimming device -900/71 | 40 |
| 1.06.01 | Pre-adjust the thread catcher | 40 |
| 1.06.02 | Positioning the ball stud | 41 |
| 1.06.03 | Position of thread catcher to needle | 42 |
| 1.06.04 | Thread catcher interlock | 43 |
| 1.06.05 | Tension release | 44 |
| 1.06.06 | Cutting test | 45 |
| 2 | Circuit diagrams | 46 |

# 1 Adjustment



Please observe all notes from Chapter **1 Safety** of the instruction manual!
In particular care must be taken to see that all protective devices are refitted properly after adjustment, see Chapter **1.06 Danger warnings** of the instruction manual!



If not otherwise stated, the machine must be disconnected from the electrical power supply. Danger of injury due to unintentional starting of the machine!

## Notes on adjustment

All following adjustments are based on a fully assembled machine and may only be carried out by expert staff trained for this purpose.
Machine covers, which have to be removed and replaced to carry out checks and adjustments, are not mentioned in the text.
The order of the following chapters corresponds to the most logical work sequence for machines which have to be completely adjusted. If only specific individual work steps are carried out, both the preceding and following chapters must be observed.
Screws, nuts indicated in brackets ( ) are fastenings for machine parts, which must be loosened before adjustment and tightened again afterwards.

## 1.01 Tools, gauges and other accessories for adjusting

- Screwdrivers with blade width from **2** to **10 mm**
- Spanners (wrenches) with jaw width from **7** to **14 mm**
- **1** set Allen keys from **1.5** to **6 mm**
- Metal rule (Order No. **08-880 218-00**
- **1** adjustment pin, ∅ **5 mm** (Order No. **13-030 341-05** )
- **1** clamp (Order No. **61-111 600-35/001**
- **1** gauge (Order No. **61-111 642-19**
- **1** gauge for the looper (Order No. **61-111 643-06**

## 1.02 Abbreviations

t.d.c. = top dead centre
b.d.c. = bottom dead centre

## 1.03 Explanation of the symbols

In this adjustment manual, symbols emphasize operations to be carried out or important information. The symbols used have the following meaning:



Note, information

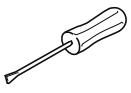

Service, repair, adjustment, maintenance
(work to be carried out by qualified staff only)

## 1.04 Control and adjustment aids

By adjusting the holes **1**, **3** and **4** with the adjustment pin ( ∅ **5 mm**) the required needle bar positions can be set exactly.

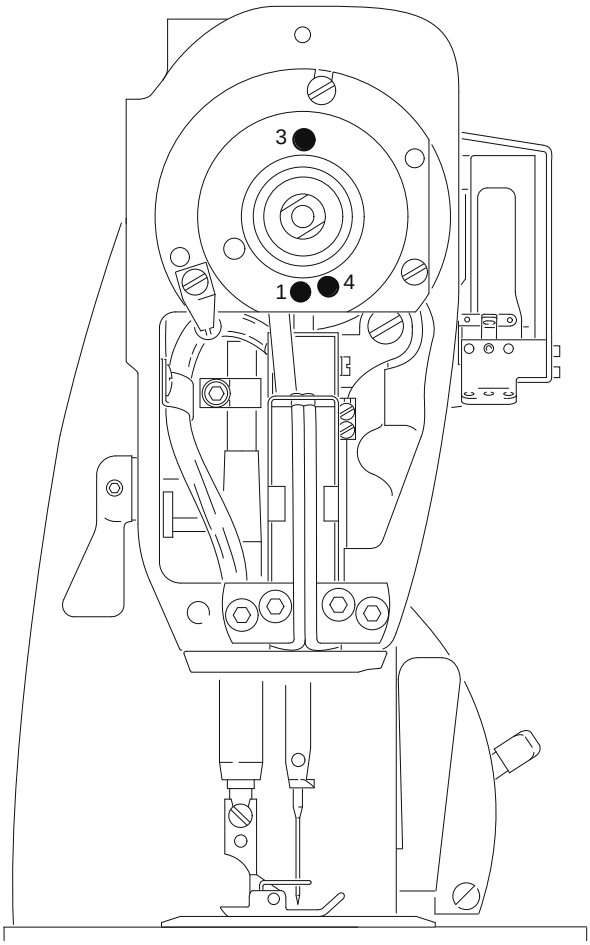


Fig. 1 - 01

- Turn the balance wheel until the needle by is approximately in the required postion.
- Insert the adjustment pin into the appropriate adjustment hole and apply pressure.
- Turn the balance wheel slightly backwards and forwards, until the adjustment pin slips into the rear crank recess, blocking the machine.

**Adjustment hole 1** = top dead center of the needle bar (TDC)
**Adjustment hole 3** = bottom dead center of the needle bar (BDC)
**Adjustment hole 4** = **0.8 mm** before the top dead center of the needle bar (**0.8** before TDC)

## 1.05 Adjusting the basic machine

### 1.05.01 Position of the needle in the needle hole

Requirement

1. The needle **6** must be centered in the needle hole in a crosswise direction.
2. The distance between needle **6** and the front edge of the needle plate must be **approx. 0.8 mm**. (In the case of machines with **-911/...** the needle **6** must be centered in the needle hole in the sewing direction.)

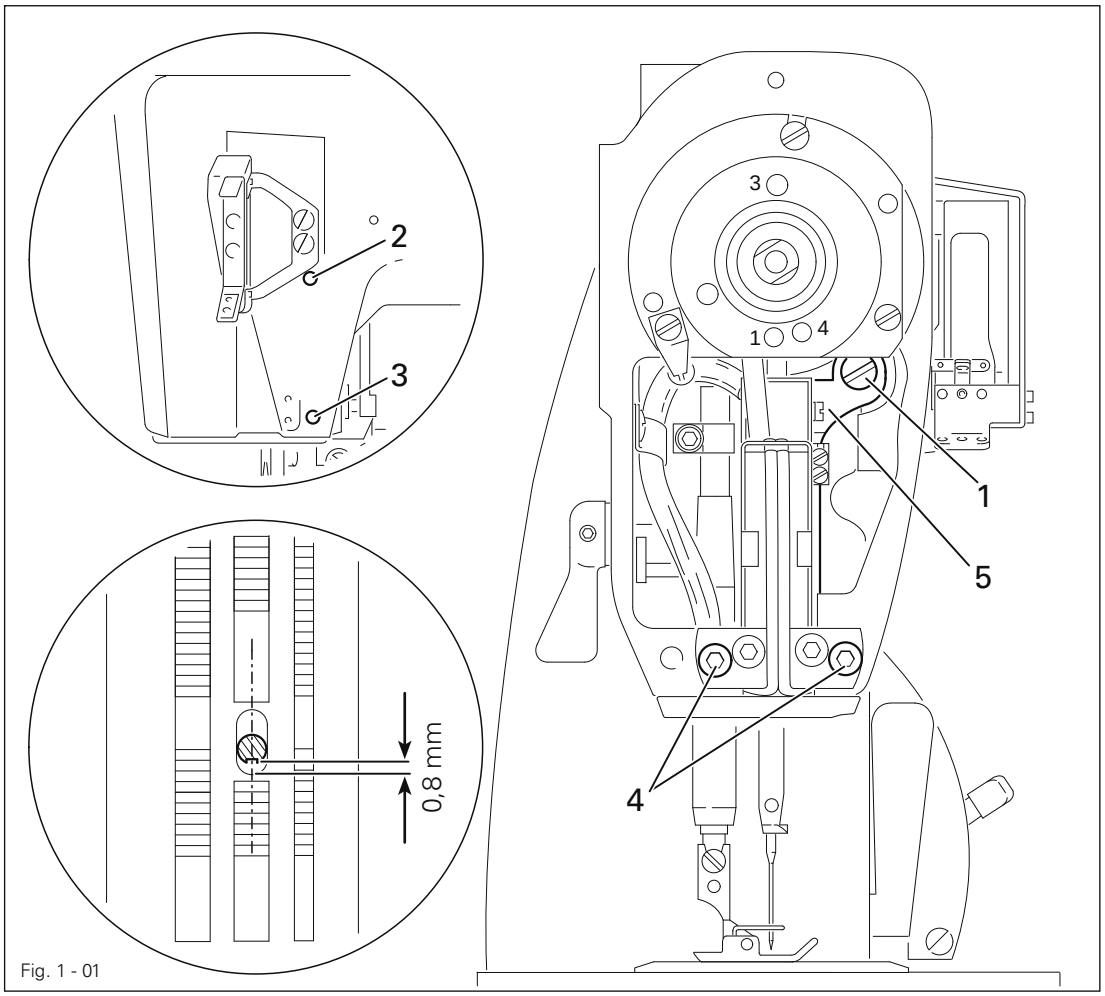


Fig. 1 - 01

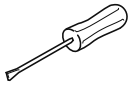

- Loosen screws **1, 2, 3** and **4**.
- Shift needle bar frame **5** according to the **requirements**.
- Tighten screw **3** securely and slightly tighten screw **2**.
- Using screw **1**, pull the guide stud behind it against the eye of the needle bar frame **5** and tighten it.
- Loosen screw **2** and turn the balance wheel a few times (this helps to avoid the occurence of any tension).
- Tighten screw **2**.
- Tighten screw **4**, making sure that the slotted guide is parallel to the needle bar.

## 1.05.02 Preliminary adjustment of the needle height

**Requirement**
With the needle bar at TDC (pin in hole **1**) the needle point must be positioned **11 mm** above the needle plate, or in the case of the H-model **12.5 mm**.

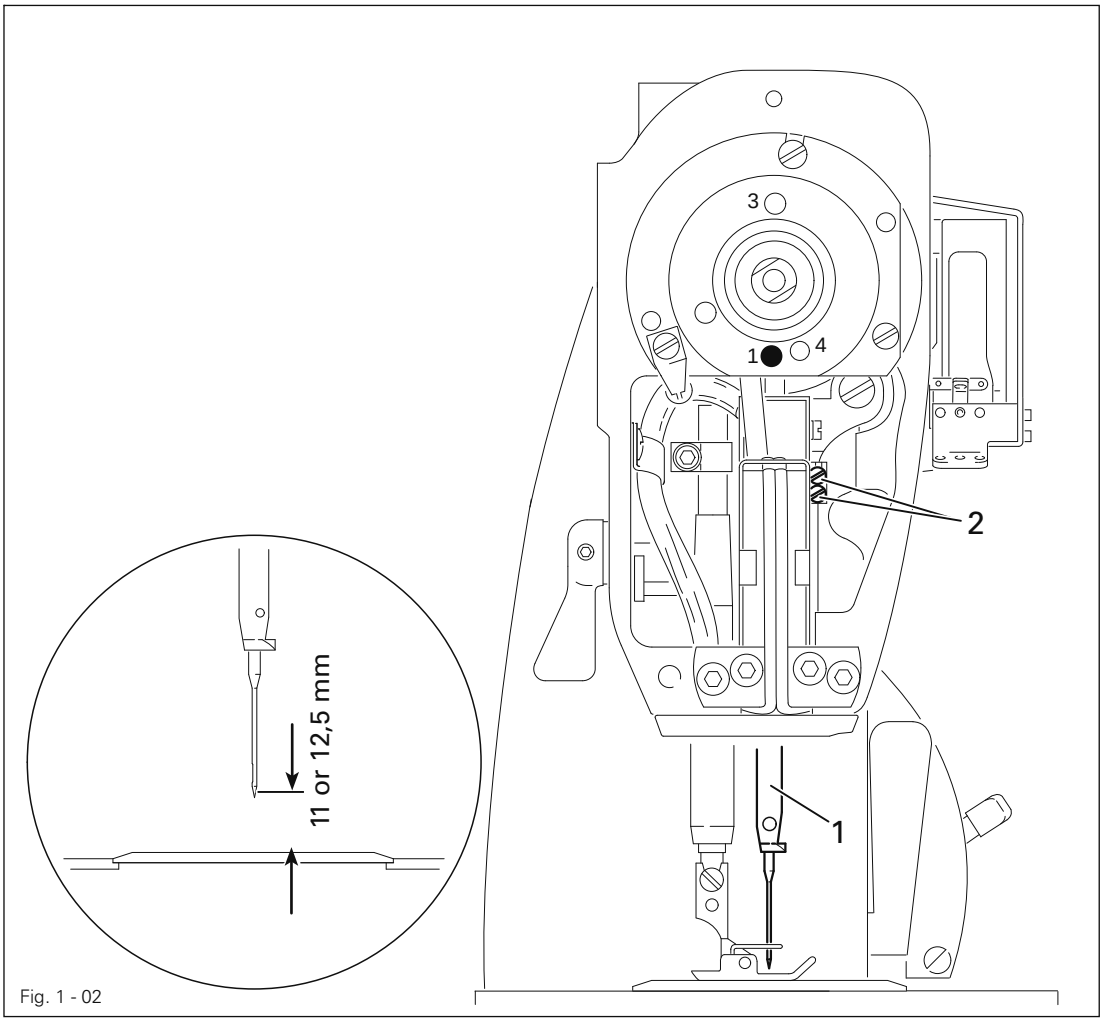


Fig. 1 - 02

- Bring the needle bar **1** to TDC.
- Adjust needle bar **1** (screw **2**) according to the **requirement**.

## 1.05.03 Zeroing the bottom feed (on machines with closed gearcase)

**Requirement**
With the stitch length set at "**0**", the feed dog must not move when the balance wheel is turned.

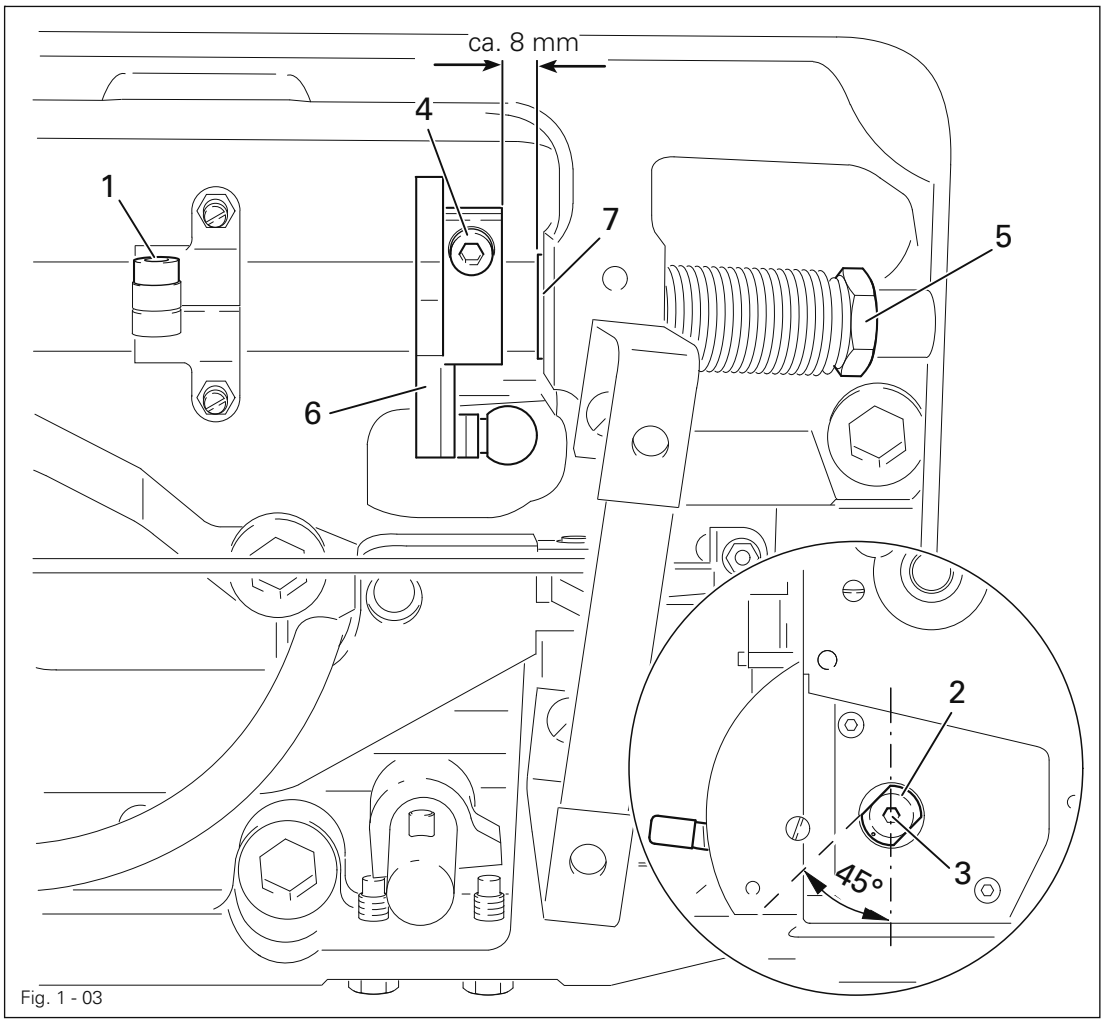

Fig. 1 - 03

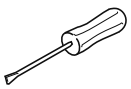

- Loosen screw **1**.
- Set stitch length at "**0**".
- Turn eccentric bush **2** (screw **3**) so that the marking faces downward and the surface of the eccentric bush **2** is at an angle of **45°** to the front edge of the machine.
- Loosen screw **4** and twist tension ring **5** according to the **requirement** while turning the balance wheel continuously.
- Set crank **6** at a distance of **approx. 8 mm** from the contact ring **7** and tighten screw **4**.



Screw **1** is left loose for further adjustments.

## 1.05.04 Zeroing the bottom feed (on machines with open gearcase)

**Requirement**
With the stitch length set at "**0**", the feed dog must not move when the balance wheel is turned.

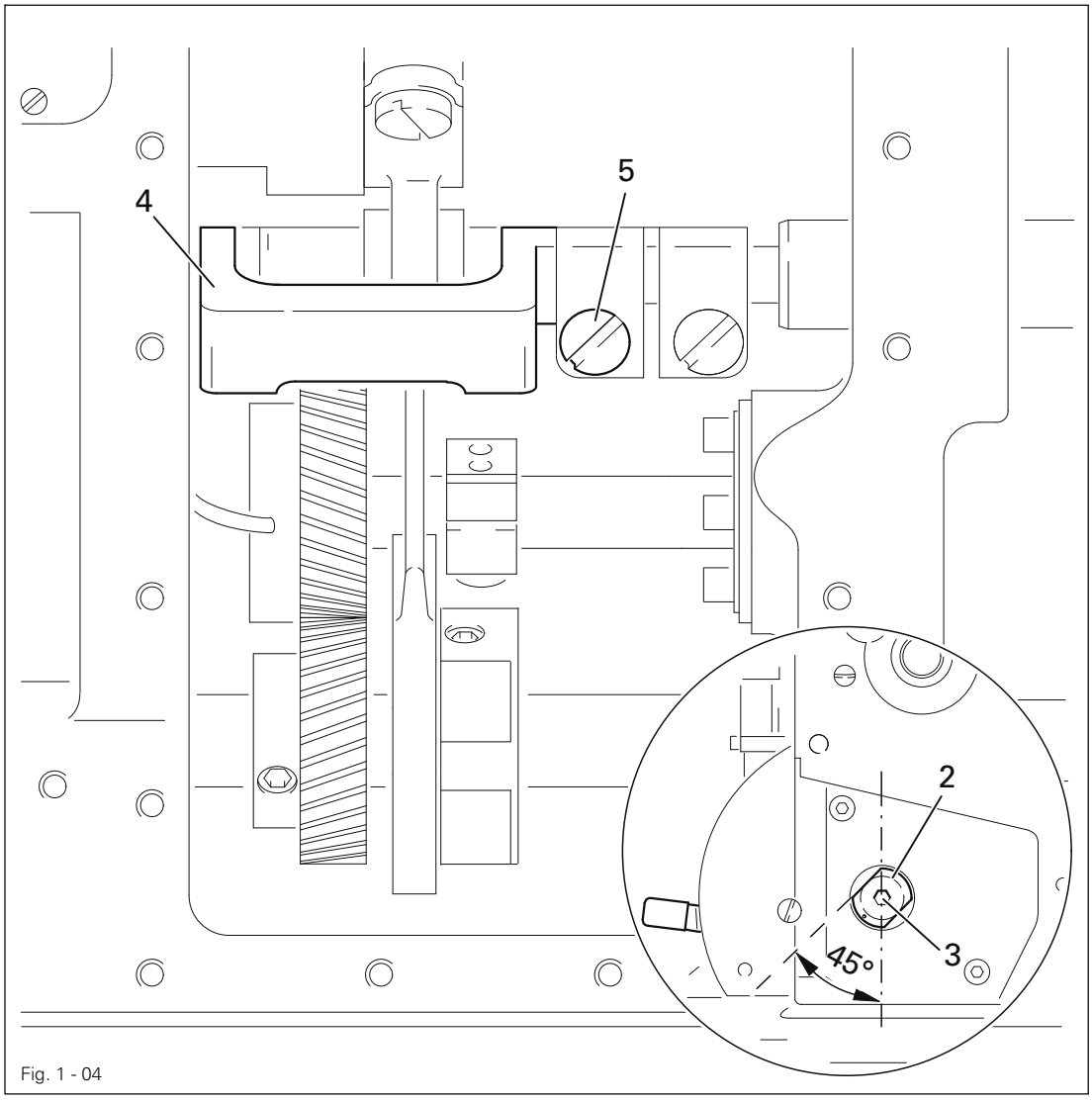


Fig. 1 - 04

- Loosen screw **1** (see **Fig. 1 - 03**).
- Set stitch length at "**0**".
- Turn eccentric bush **2** (screw **3**) so that the marking faces downward and the surface of the eccentric bush **2** is at an angle of **45°** to the front edge of the machine.
- While turning the balance wheel continuously twist crank **4** (screw **5**) according to the
- **requirement.**

Screw **1** is left loose for further adjustments.

## 1.05.05 Feed driving motion

**Requirement**
With the stitch length set at its maximum and the needle bar positioned **0.8 mm** before TDC (pin in hole **4**), the feed dog must not move when the reverse feed switch is operated.

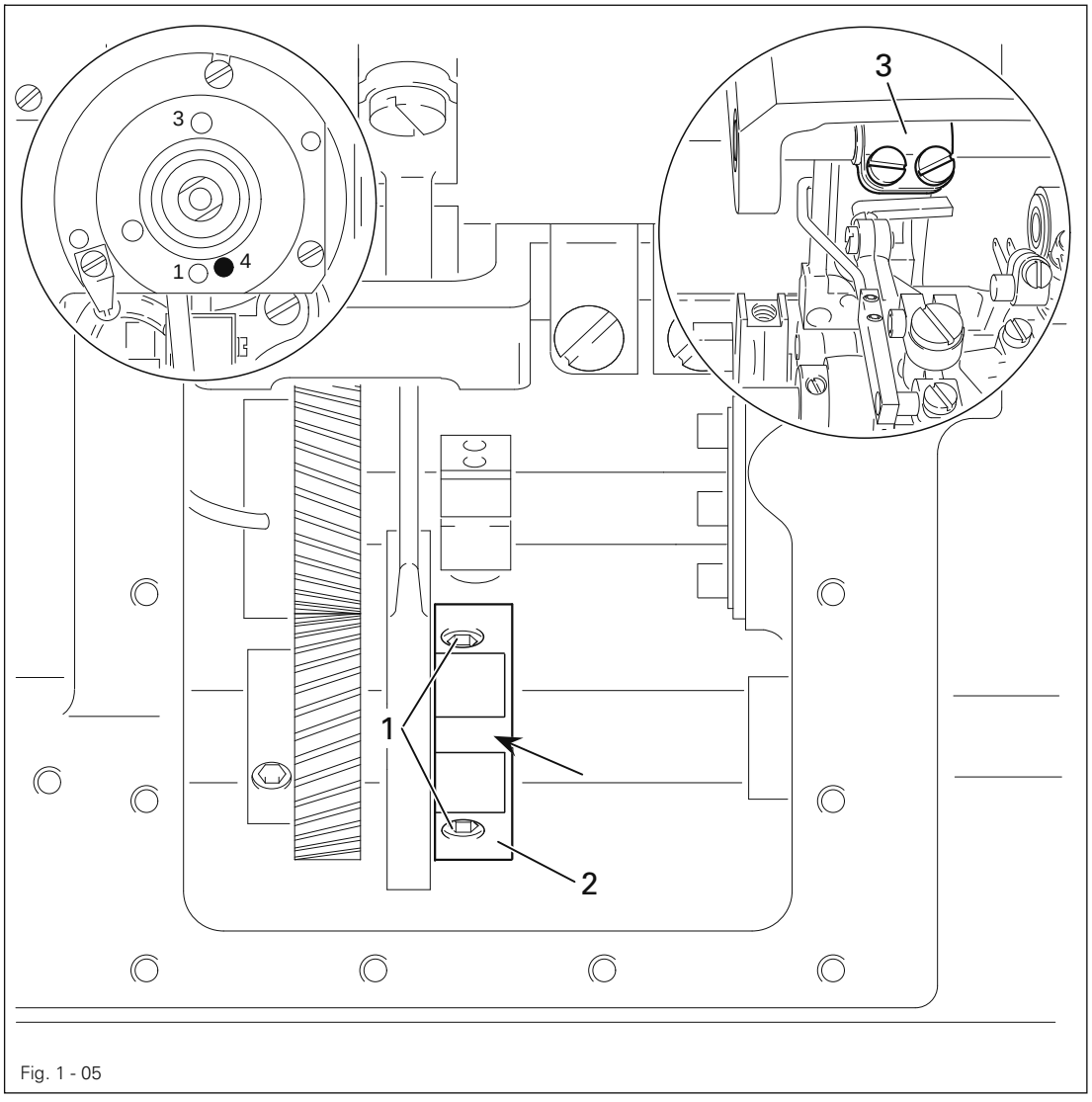


Fig. 1 - 05

- Loosen screw **1**.
- Position needle bar **0.8 mm** before TDC and adjust stitch length to maximum setting.
- While operating the reverse feed switch, twist eccentric **2** until the slot is visible (see arrow) and crank **3** does not move.
- Tighten screw **1**.

## 1.05.06 Feed lifting motion

**Requirement**
When the needle bar is at TDC, or or **0.8 mm** before TDC for H-model machines and machines with -**911**/.. (pin in hole **1** or **4**), the slot of eccentric **2** must be pointing vertically

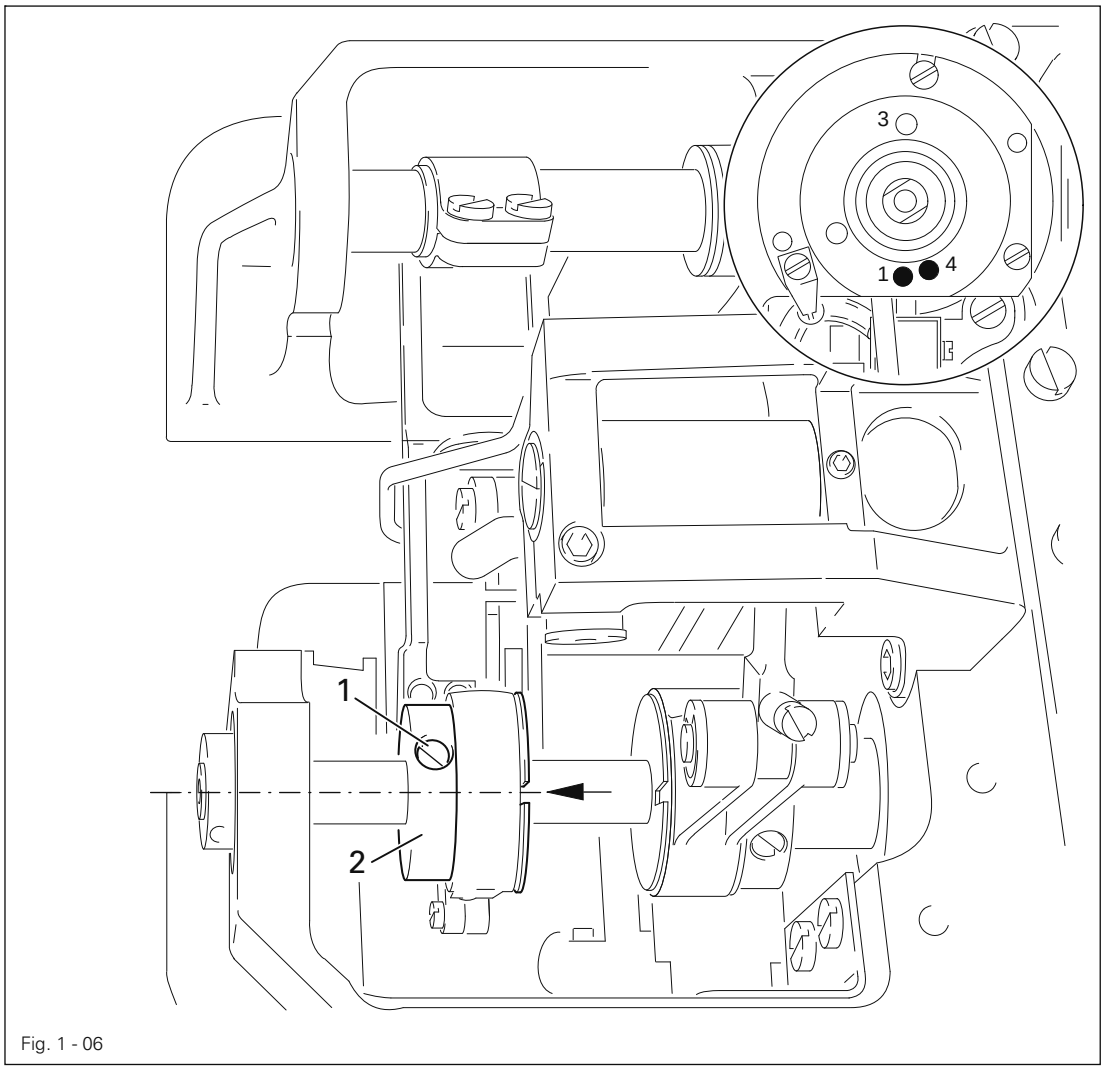


Fig. 1 - 06

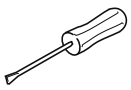

- Loosen screw **1**.
- Position needle bar appropriately.
- Twist eccentric **2** according to the **requirement** and tighten accessible screw **1**.
- By turning the balance wheel make the second screw **1** accessible and tighten it.

## 1.05.07 Feed lifting height

**Requirement**
With the stitch length set at its maximum and the needle bar positioned at TDC, or at **0.8 mm** before TDC for model H machines and machines with **-911/...** (pin in hole **1** or **4**), the feed dog must be centered in its slots and its entire length must be in contact with the adjustment gauge.

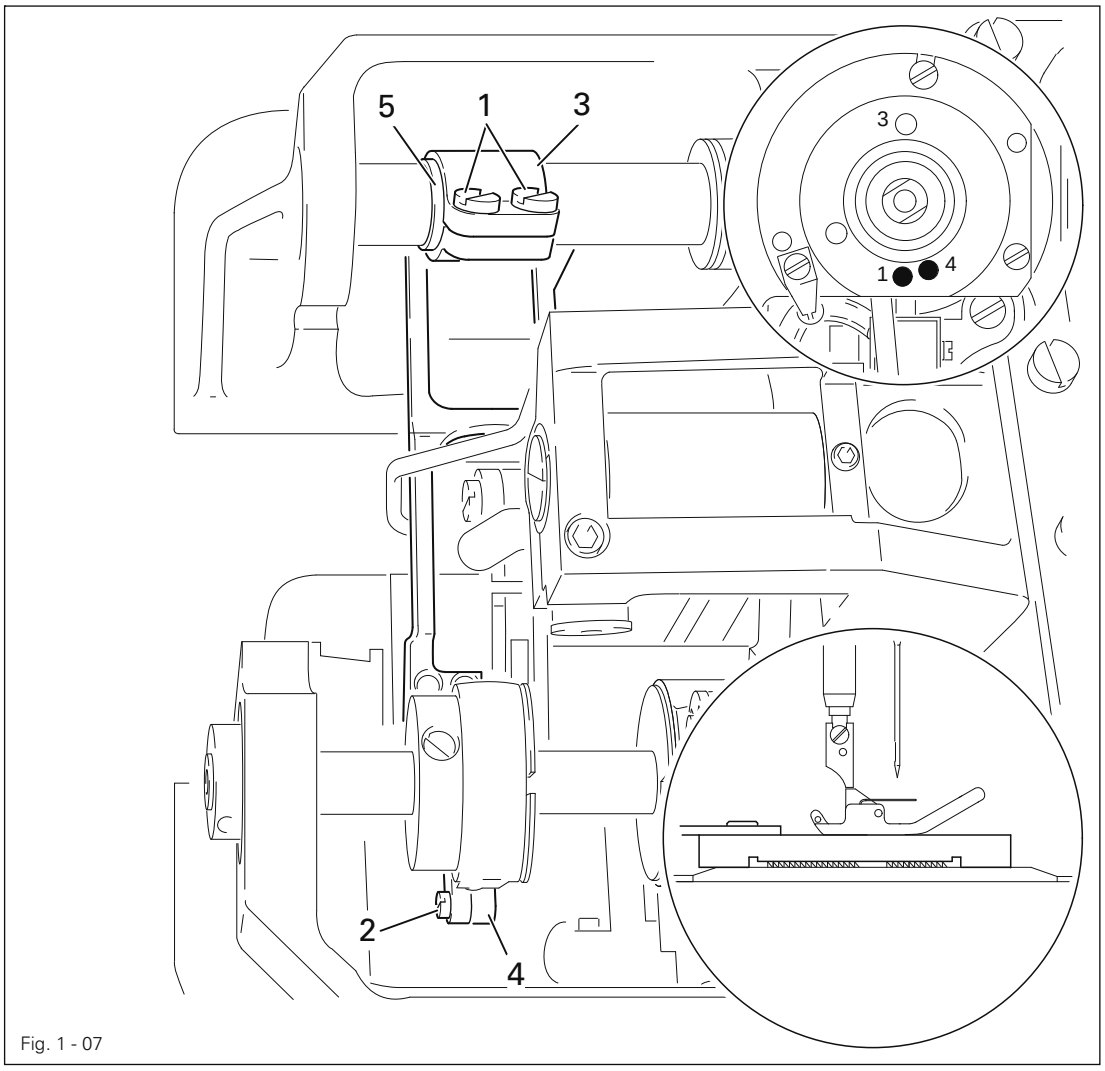


Fig. 1 - 07

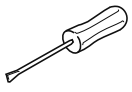

- Set the maximum stitch length and position the needle bar appropriately.
- Place the adjustment gauge (Order No. **61-111 642-19**) on the needle plate so that its recess is centered above the feed slots (arrow pointing in feed direction) and lower the presser foot.
- Loosen screws **1** and **2**.
- By turning cranks **3** and **4** and the eccentric sleeve **5** adjust the feed dog according to the **requirement**.

## 1.05.08 Limiting the stitch length

**Requirement**

1. When the reverse feed switch is fully pressed, the stitch length must be **1.5 mm**.
2. When the maximum stitch length is set, the feed dog must not come into contact with the needle plate cutout.

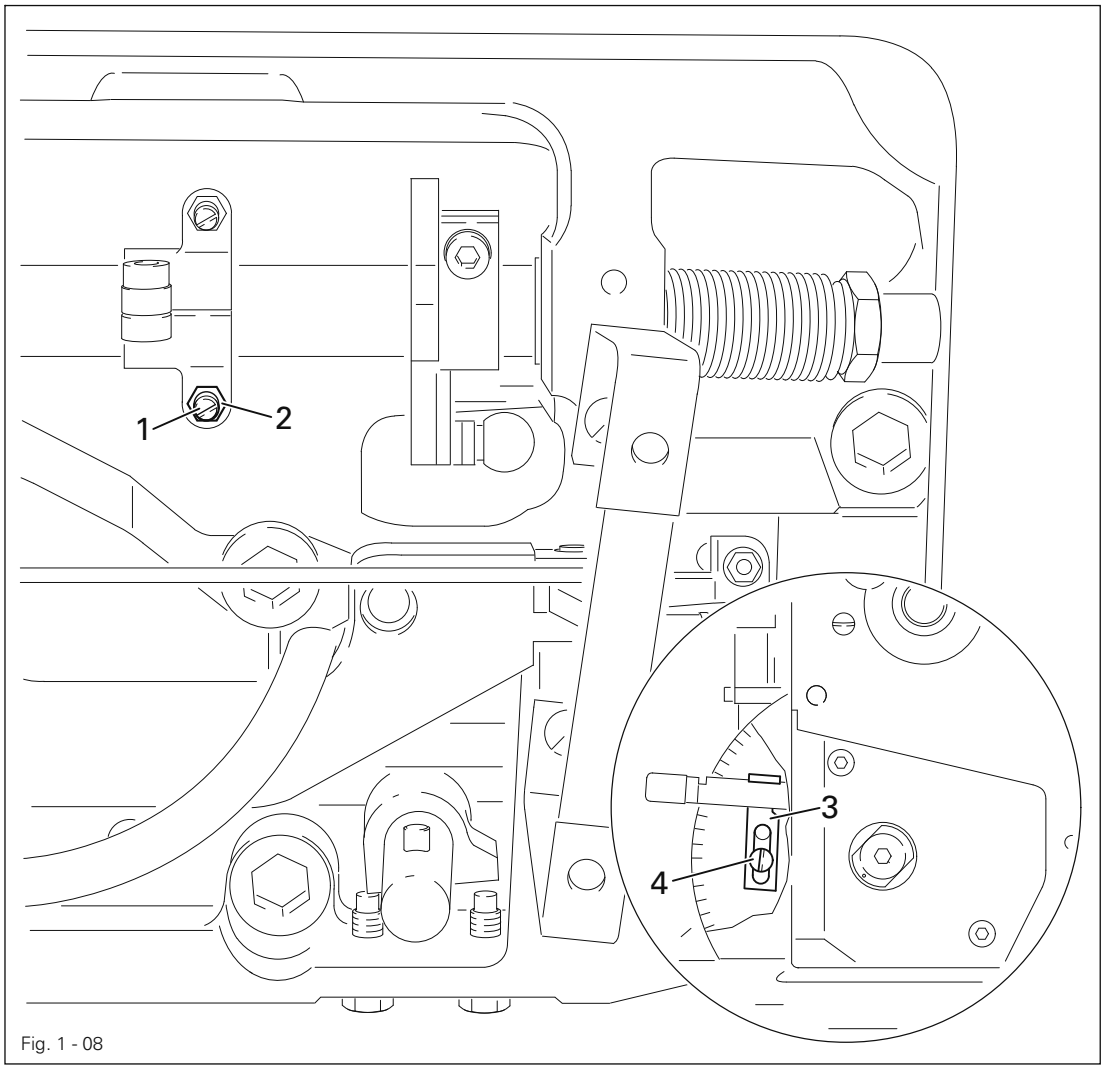


Fig. 1 - 08

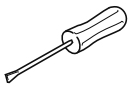

- Set stitch length at **1.5 mm**.
- Turn screw **1** (nut **2**) according to **requirement 1**.
- Adjust stop **3** (screw **4**) according to **requirement 2**.

## 1.05.09 Looper avoiding motion

**Requirement**
With the needle bar at TDC, or at **0.8 mm** before TDC for H-model machines and machines with -**911**/.. (pin in hole **1** or **4**), the slot in eccentric **2** must be positioned exactly under the center of the shaft.

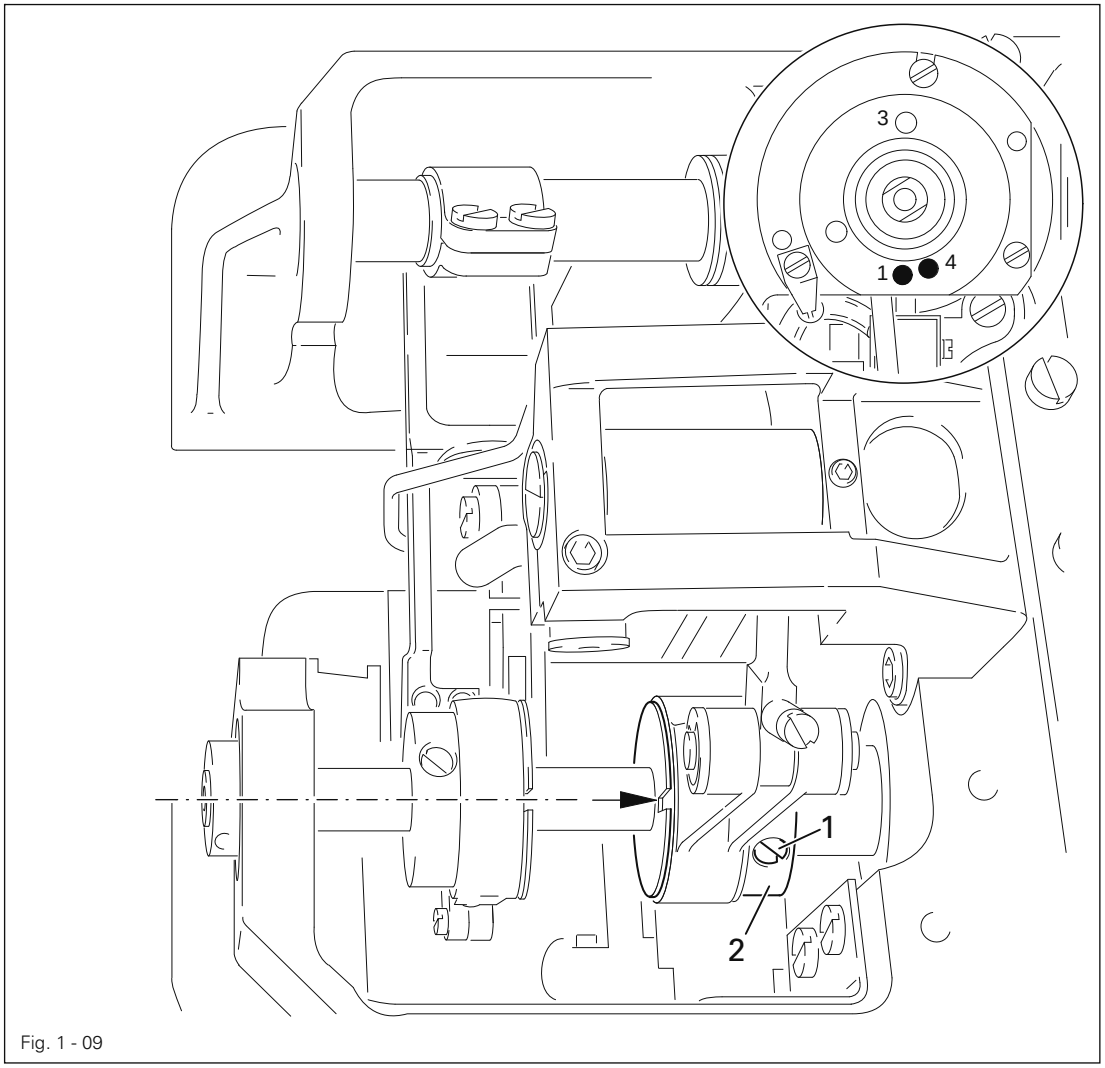


Fig. 1 - 09

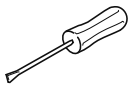

- Loosen screw **1**.
- Bring the needle bar into the appropriate position.
- Turn eccentric **2** according to the **requirement**.
- Tighten screw **1**.

## 1.05.10 Looper motion

**Requirement**
When the needle bar reaches its bottom dead center (BDC), the looper must be at its right point of reversal.

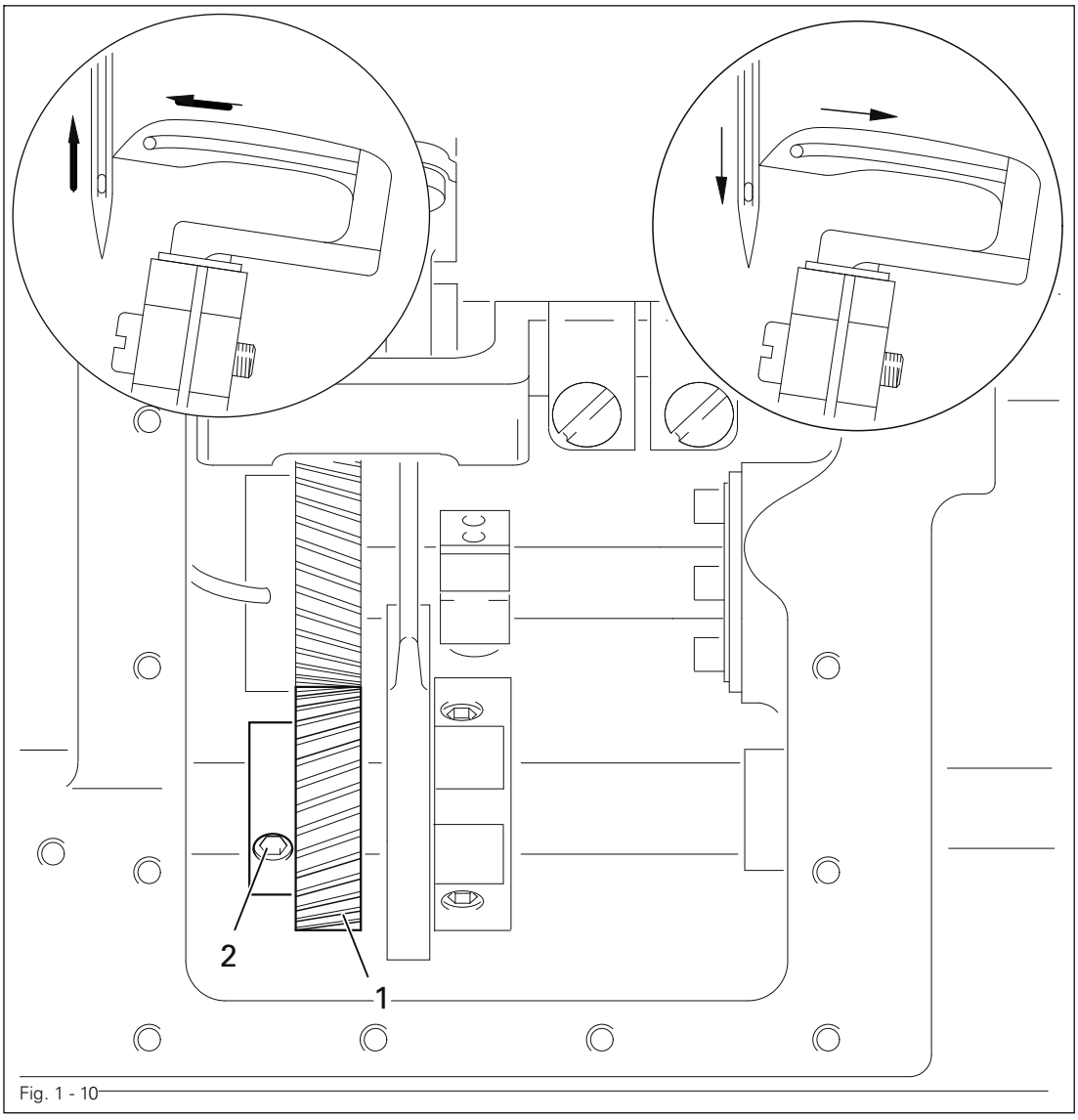


Fig. 1 - 10

**Checking the exact right point of reversal:**

- Turn the balance wheel until the point of the looper advancing from the right is at the right-hand side of the needle.
- In this position attach C-clamp (order No. **61-111 600-35/001**) to the needle bar so that the upward motion of the needle bar is blocked.
- Turn the balance wheel in the opposite direction until the C-clamp regains contact. In this position the looper point must be at the right-hand side of the needle again.
- If the looper point is not positioned at the right-hand side of the needle, turn gearwheel **1** (screw **2**) accordingly.
- Repeat control procedure.

## 1.05.11 Looper height and looper angle

**Requirement**
When the looper holder **2** is in a vertical position
1. depending on the machine type, there must be a clearance as indicated in the table below between the highest point of the looper back and the needle plate rest, and
2. the looper **7** must be touching the looper adjustment gauge **9**.

| Machine type | Clearance ( x ) |
|---|---|
| Machines without -**900**/.. | **0,7 mm** |
| Machines with -**900**/.. | **3,2 mm** |
| H-Model machines | |
| Machines with -**911**/.. | |
| Two needle machines | **1,0 mm** on the front looper |

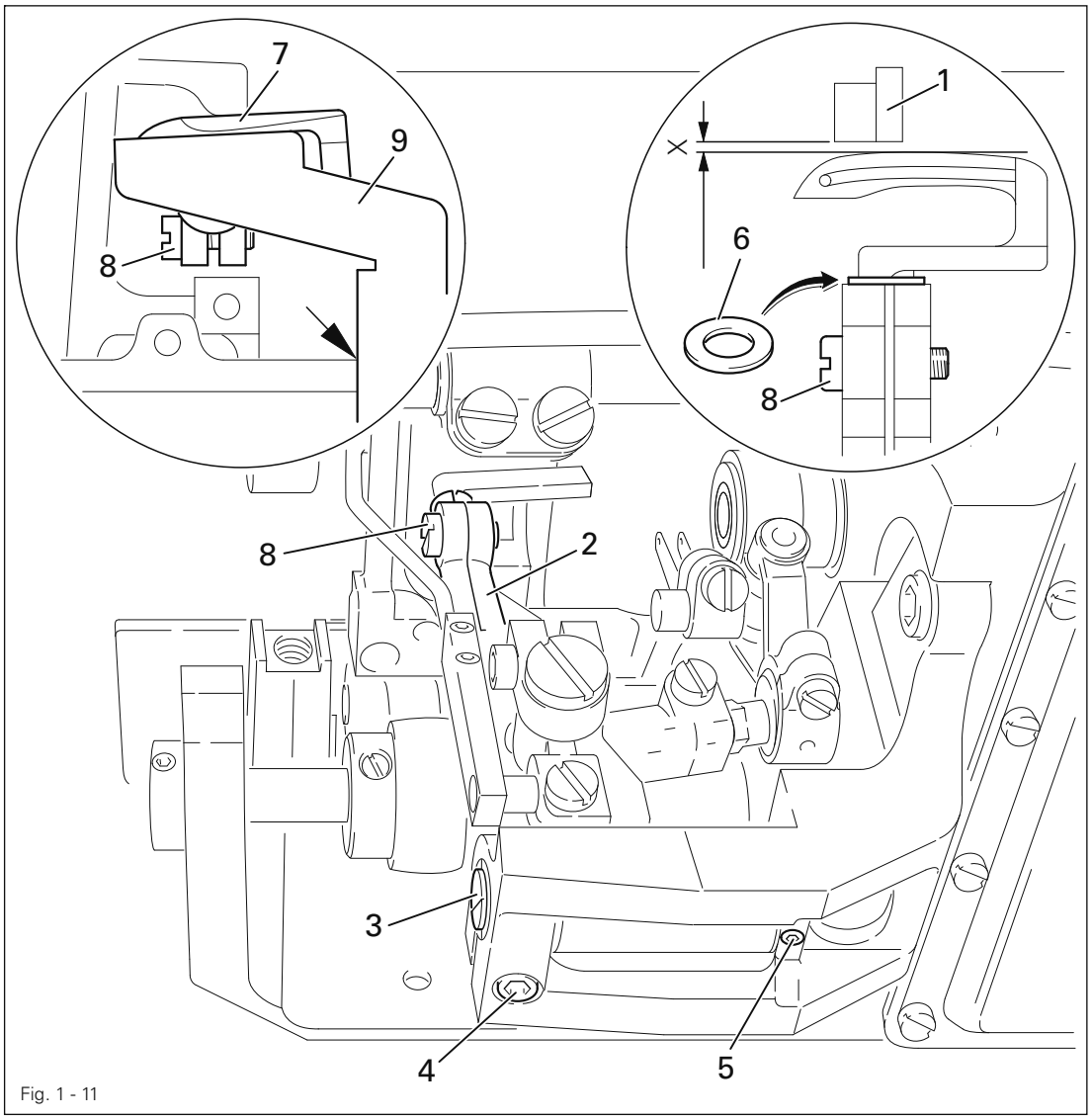


Fig. 1 - 11

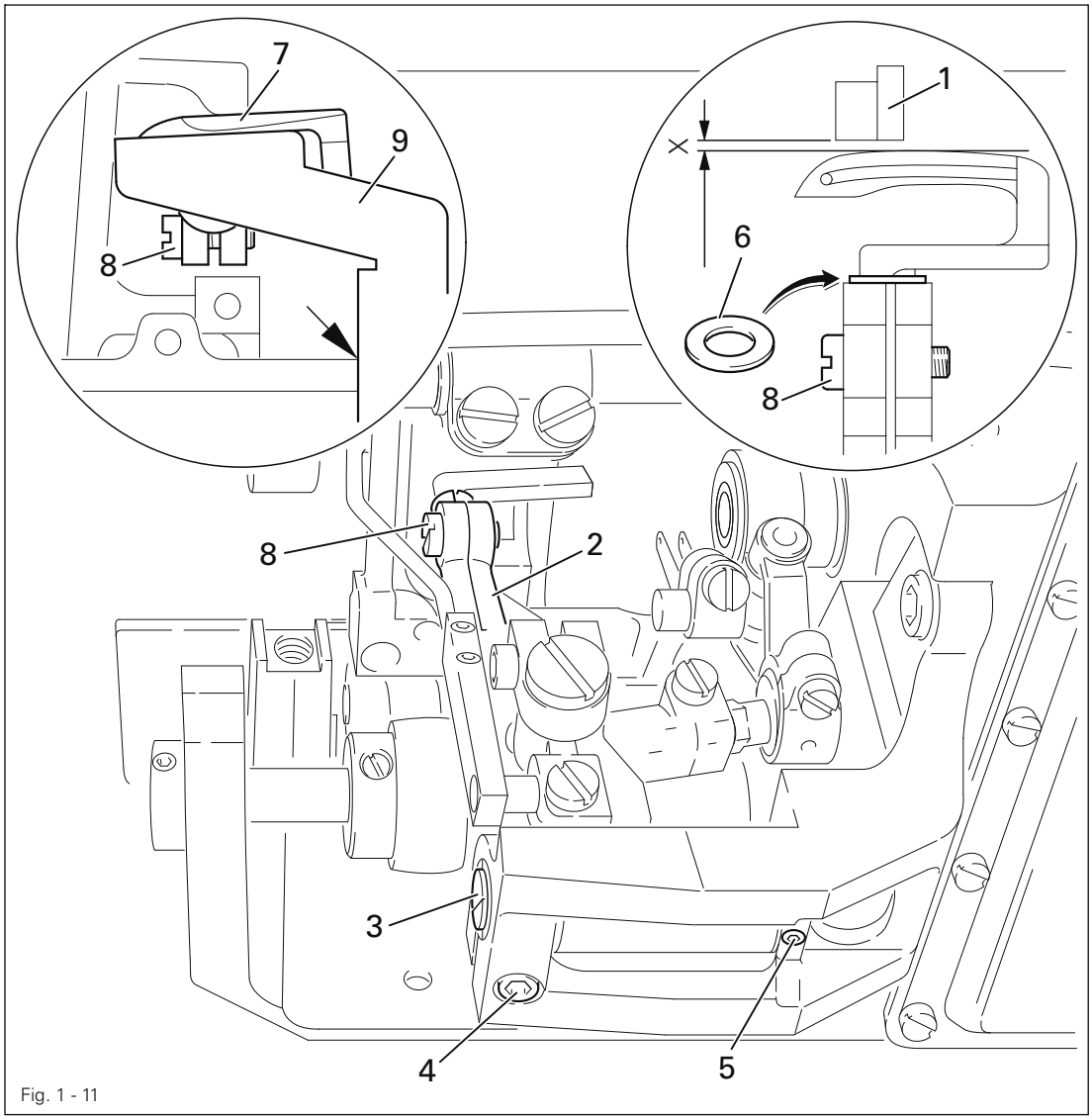


Fig. 1 - 11

- Remove needle plate and bottom feed dog.
- Place gauge **1** (Order No. **61-111 642-19**) on the needle plate rest.
- Place looper holder **2** in a vertical position.
- Twist eccentric bearing stud **3** (screws **4** and **5**) according to **requirement 1.**
- Check the adjustment.

If the required clearance is not obtained, replace spacer **6**. In order to do so, looper **7** (screw **8**) has to be removed.

- Place looper gauge **9** (Order No. **61-111 643-06**) on the left edge of the cover plate support (see arrow) and move it towards the looper **7**.
- Bring looper **7** (screw **8**) into contact with looper gauge **9** (**requirement 2**).).

| Spacer | Order-No. | Spacer | Order-No. |
|---|---|---|---|
| 0,3 mm | 91-170 693-05 | 0,8 mm | 91-169 615-05 |
| 0,5 mm | 91-169 614-05 | 1,2 mm | 91-170 694-05 |

## 1.05.12 Looper-to-needle clearance in sewing direction

**Requirement**
In sewing direction there must be a cleaance of approx. **0.1 mm** between looper point and needle.

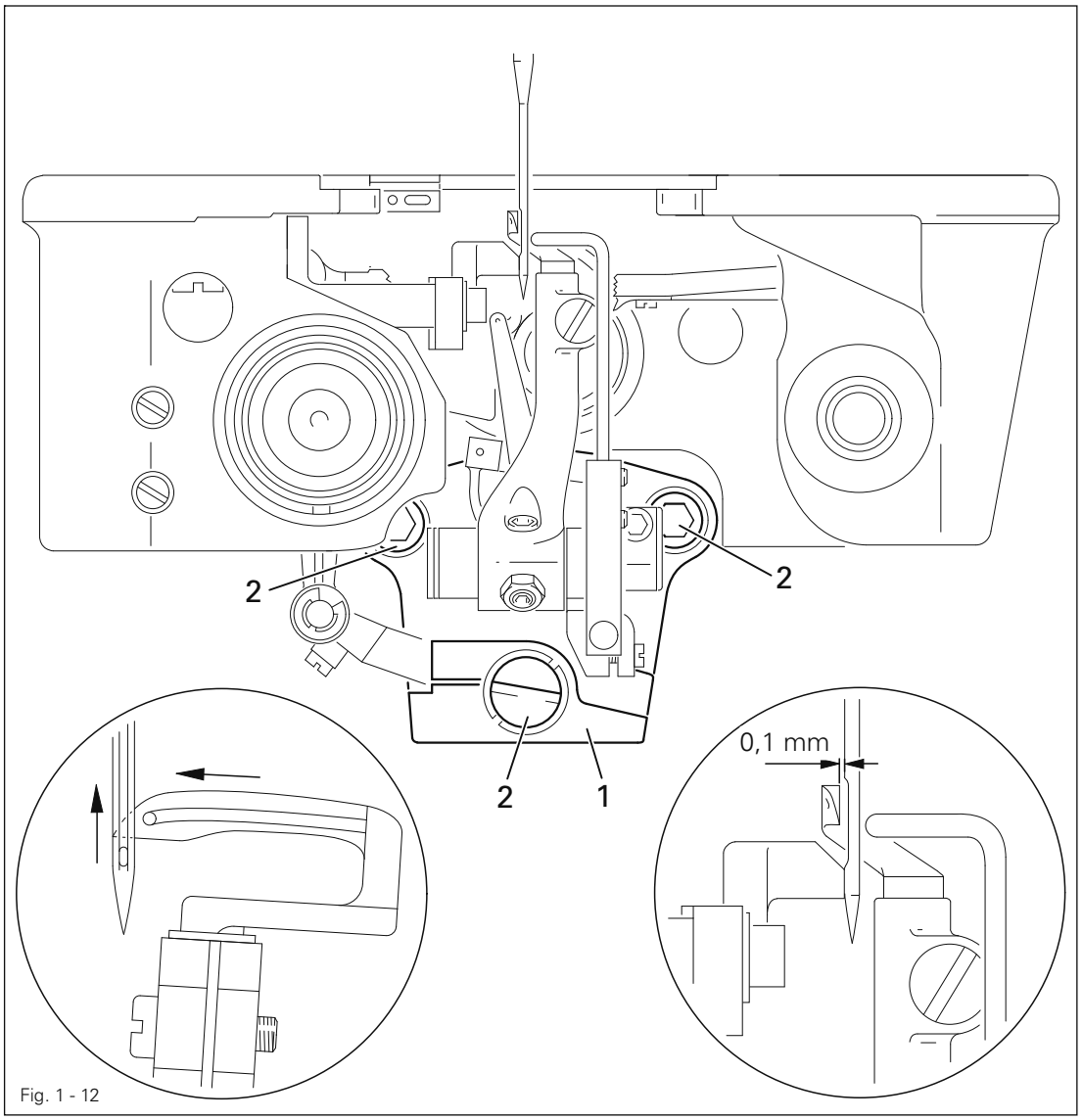


Fig. 1 - 12

- Turn the balance wheel until the looper point coming from the right reaches the left side of the needle.
- Align looper unit **1** (screw **2**) according to the **requirement**.

If a clearance of **0.1 mm** cannot be obtained, the setting of the eccentric bearing stud **3** can be corrected. In this case the looper height and angle must be checked, see **Chapter 1.05.11 Looper height and looper angle.**

## 1.05.13 Looper-to-needle clearance crosswise to sewing direction

**Requirement**
When the looper **1** is at its right point of reversal, there must be a clearance between the looper point crosswise to the sewing direction and the needle center of **3.2 mm**.

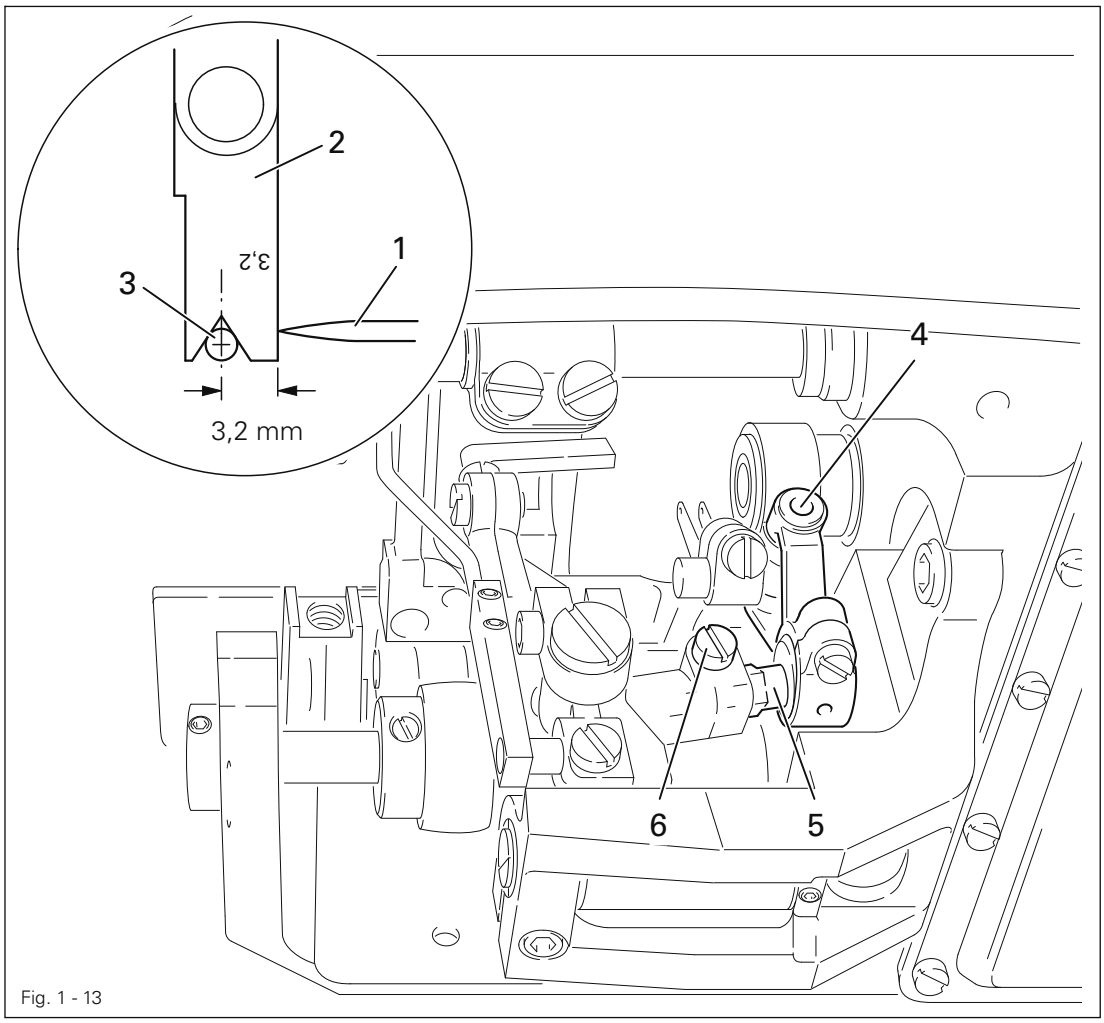

Fig. 1 - 13

- By turning the balance wheel bring the looper **1** to its right point of reversal.
- Place the "**3.2**" blade of looper gauge **2** (Order No. **61-111 643-06**) against the needle **3** with its notch facing the direction of feed.
- Make sure that the driving link **4** is vertical and turn the ball pin **5** (screw **6**) with the aid of an open-ended spanner (size **6**), until the looper point **1** contacts the blade.

## 1.05.14 Final adjustment of the needle height

**Requirement**
When the point of the looper advancing from the right reaches the left side of the needle, the top edge of the needle eye must be **1.0 - 1.2 mm** below the bottom edge of the looper.

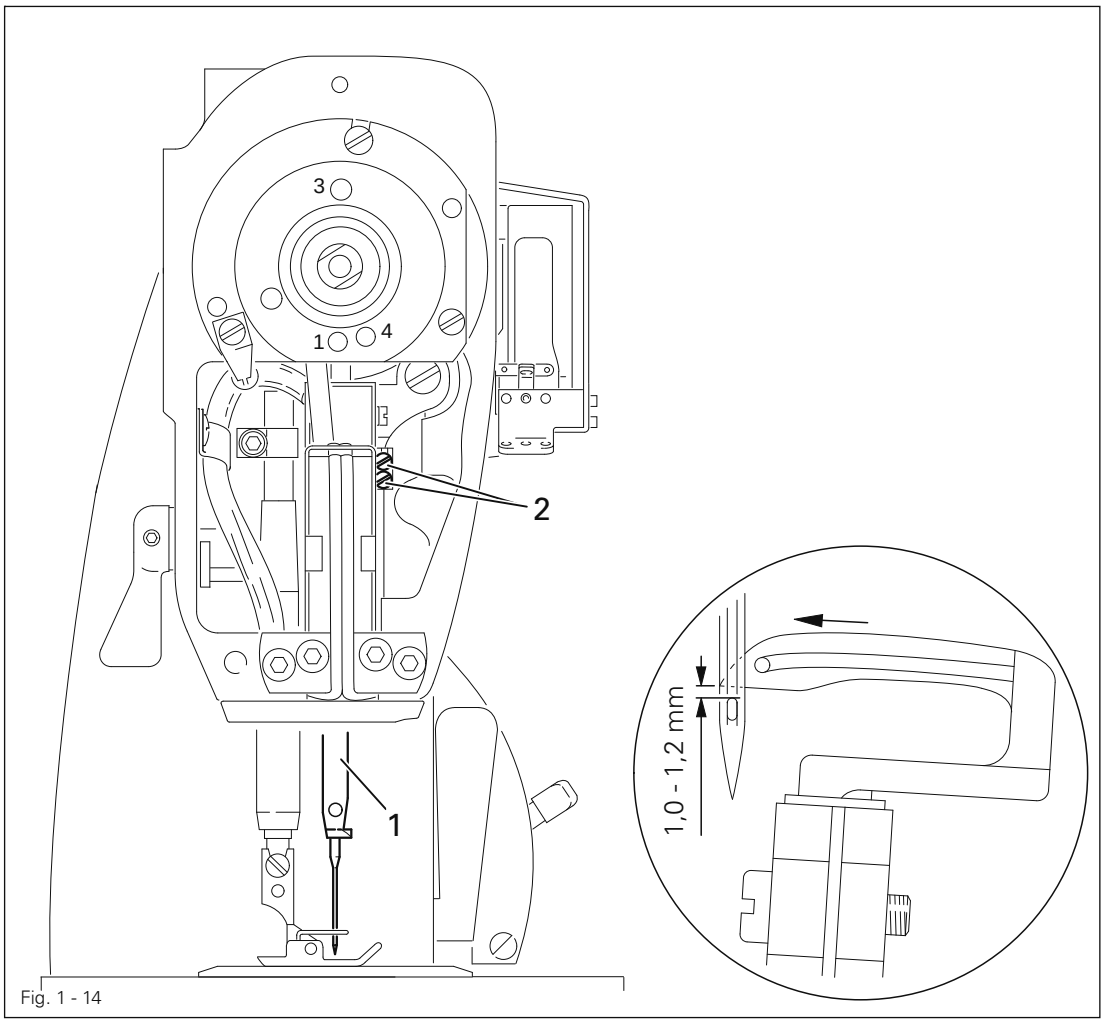


Fig. 1 - 14

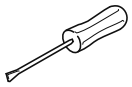

- Turn the balance wheel until the looper point, which is coming from the right, reaches the left side of the needle.
- Without turning the needle bar **1** (screw **2**) adjust it according to the **requirement**.

## 1.05.15 Height of rear needle guard

**Requirement**
When the needle bar is at bottom dead center (pin in hole **3**), the vertical surface of the needle guard **1** must cover **about 2/3** of the needle eye.

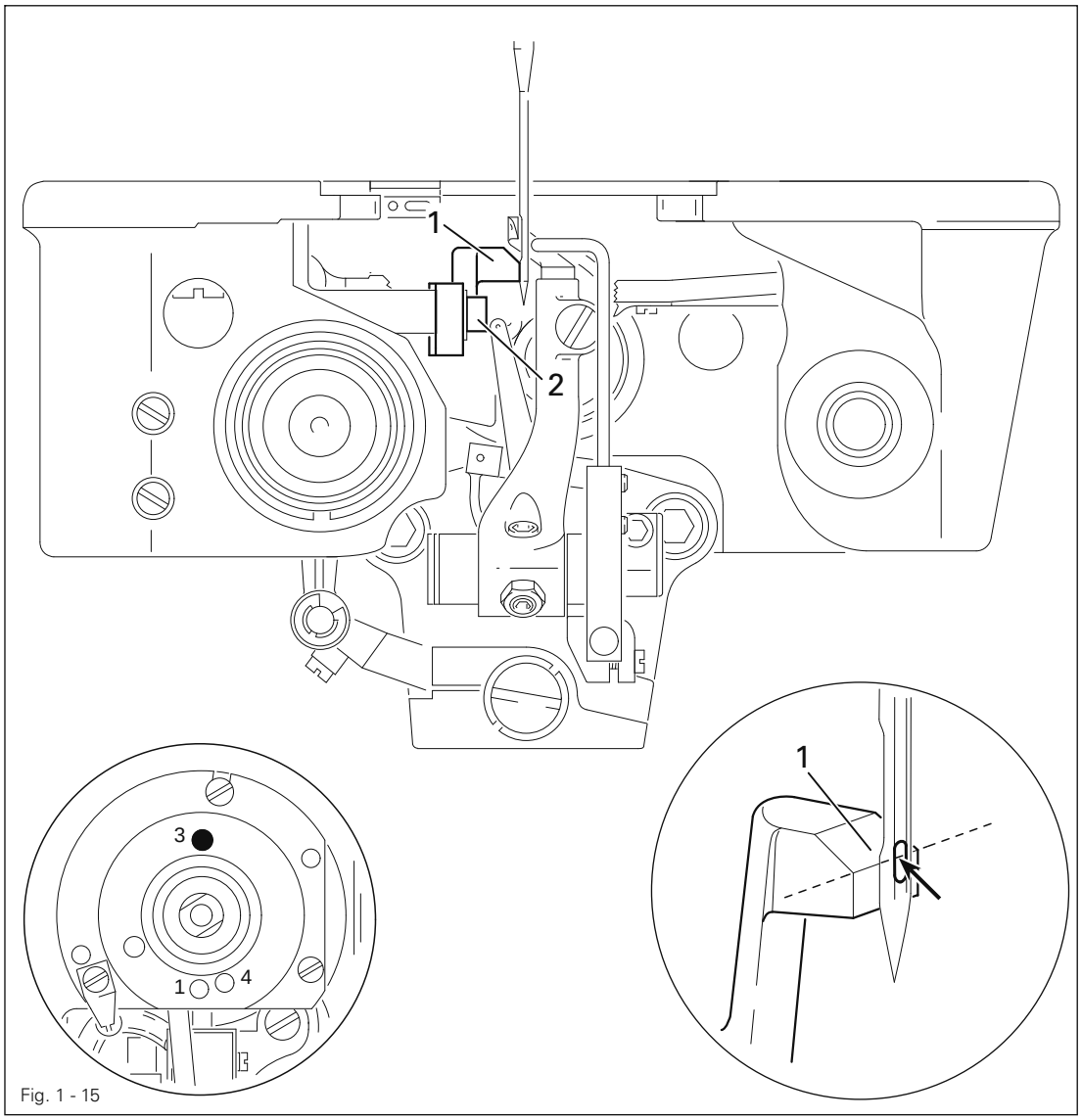


Fig. 1 - 15

- Bring the needle bar to BDC.
- Adjust needle guard **1** (screw **2**) according to the **requirement**.

## 1.05.16 Clearance between rear needle guard and needle

**Requirement**
When the point of the looper, which is advancing from the right, reaches the right side of the needle, the needle guard **3** must still be in slight contact with the needle.

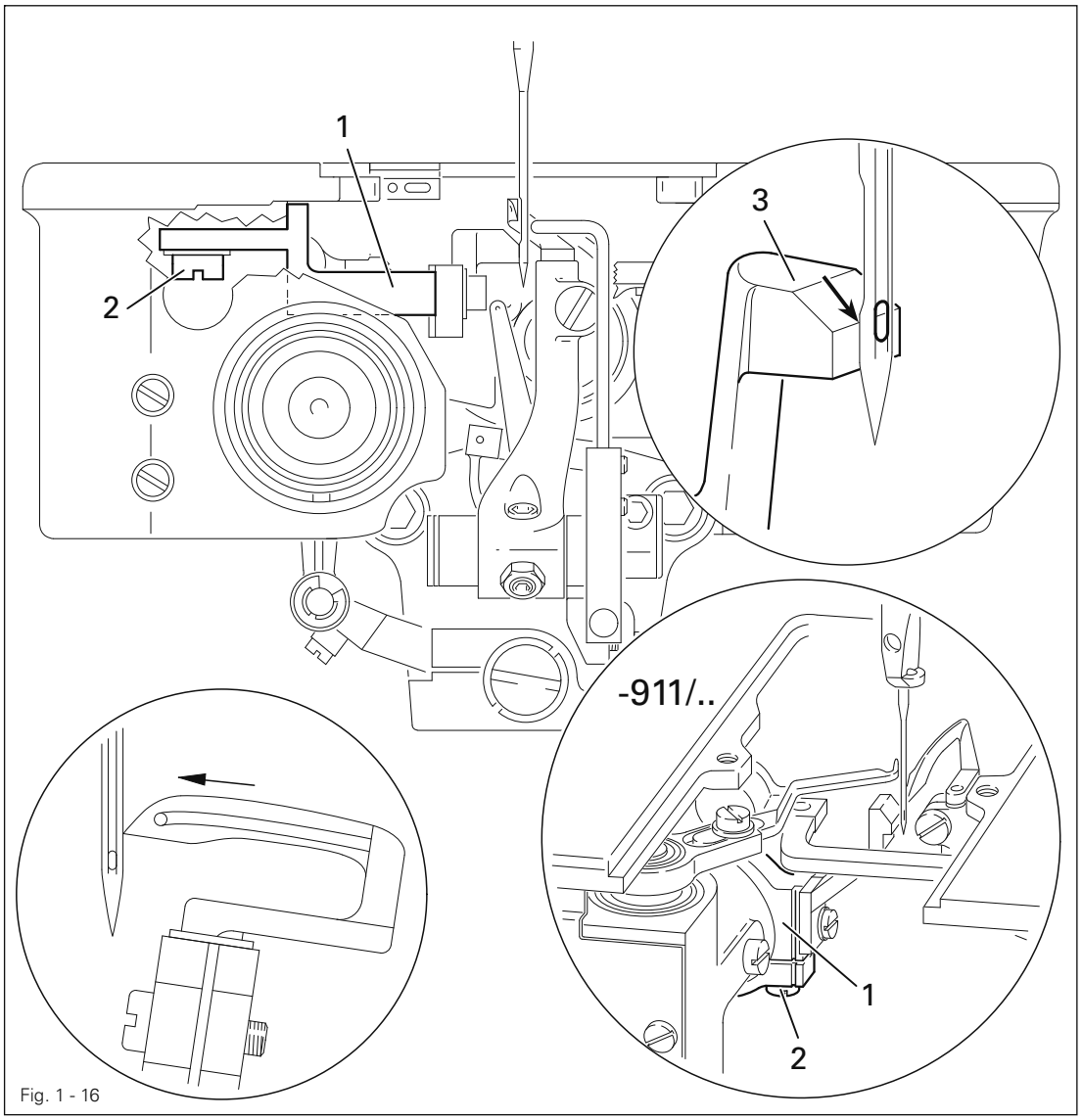


Fig. 1 - 16

- Turn the balance wheel until the looper point is located at the right side of the needle.
- Adjust bracket **1** (screw **2**) according to the **requirement**.

Under no circumstances should the needle be deflected by the needle guard **3**!

## 1.05.17 Position of the front needle guard (does not apply to all machines)

**Requirement**

When the point of the looper **1**, which is advancing from the right, is positioned in the center of the needle, the needle guard clip **4** must

1. have a side clearance to the needle of **0.3 - 0.5 mm**
2. be parallel to the looper blade
3. have its top edge at the same height as the point of looper **1**.

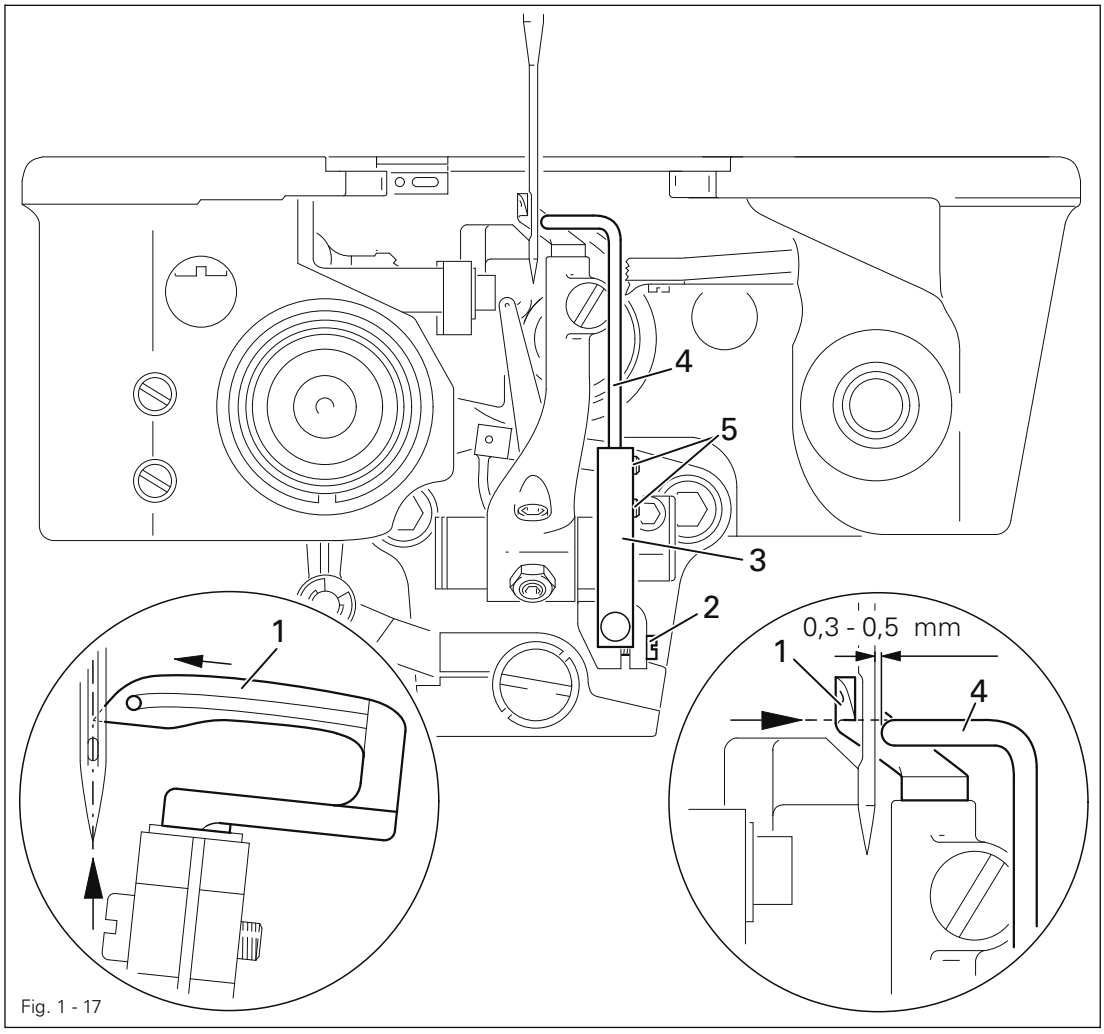


Fig. 1 - 17

- By turning the balance wheel bring looper **1** to its left point of reversal.
- Loosen screws **2**.
- Adjust needle guard bracket **3** so that in this position the needle guard clip **4** is not in contact with looper **1**.
- Slightly tighten screws **2**.
- Turn the balance wheel until the point of the looper **1**, when coming from the right, is positioned in the center of the needle.
- Adjust needle guard bracket **3** according to **requirement 1**.
- Align needle guard clip **4** (screws **5**) according to **requirement 2** and **3**.

## 1.05.18 Guard of looper-avoiding-motion eccentric

**Requirement**
During motion the eccentric **3** must not touch guard **1**.

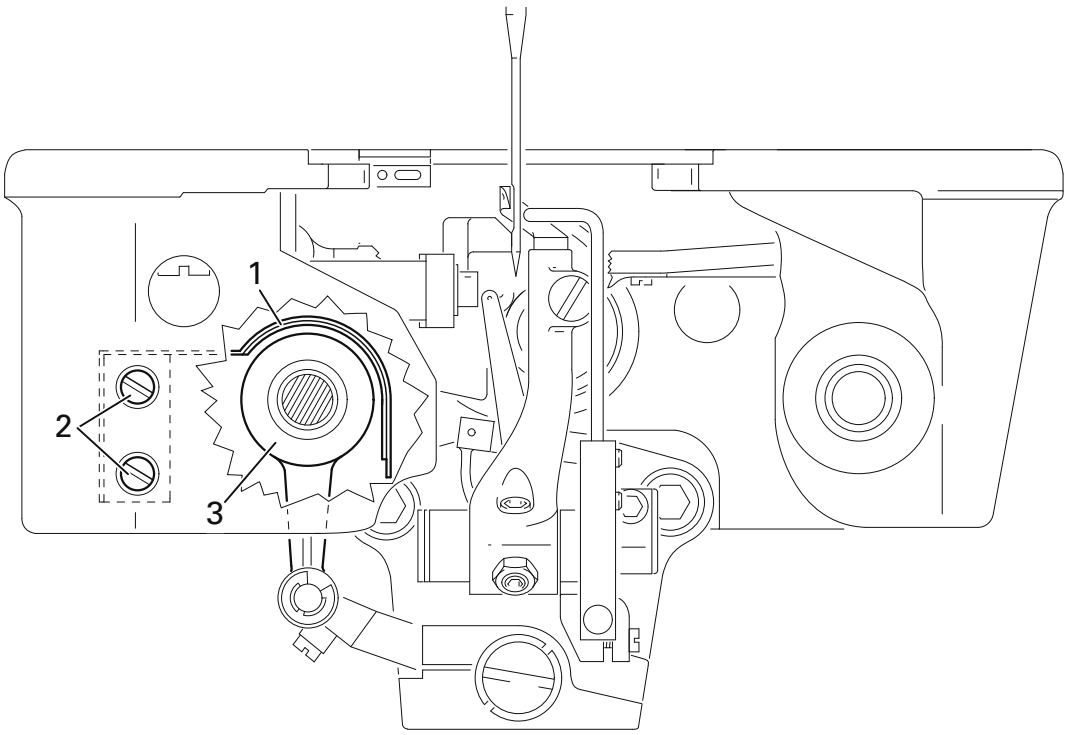


Fig. 1 - 18

- Adjust guard **1** (screws **2**, accessible through adjustment holes) according to the **requirement**.

## 1.05.19 Take- up lever

**Requirement**

1. When the needle bar is at BDC (pin in hole **3**) there must be a clearance of about **0.3 mm** between the take-up lever **2** and the needle bar frame **3**.
2. The take-up lever **2** must be able to move freely in the center of the needle head slot, and must not have any contact either at TDC or BDC.

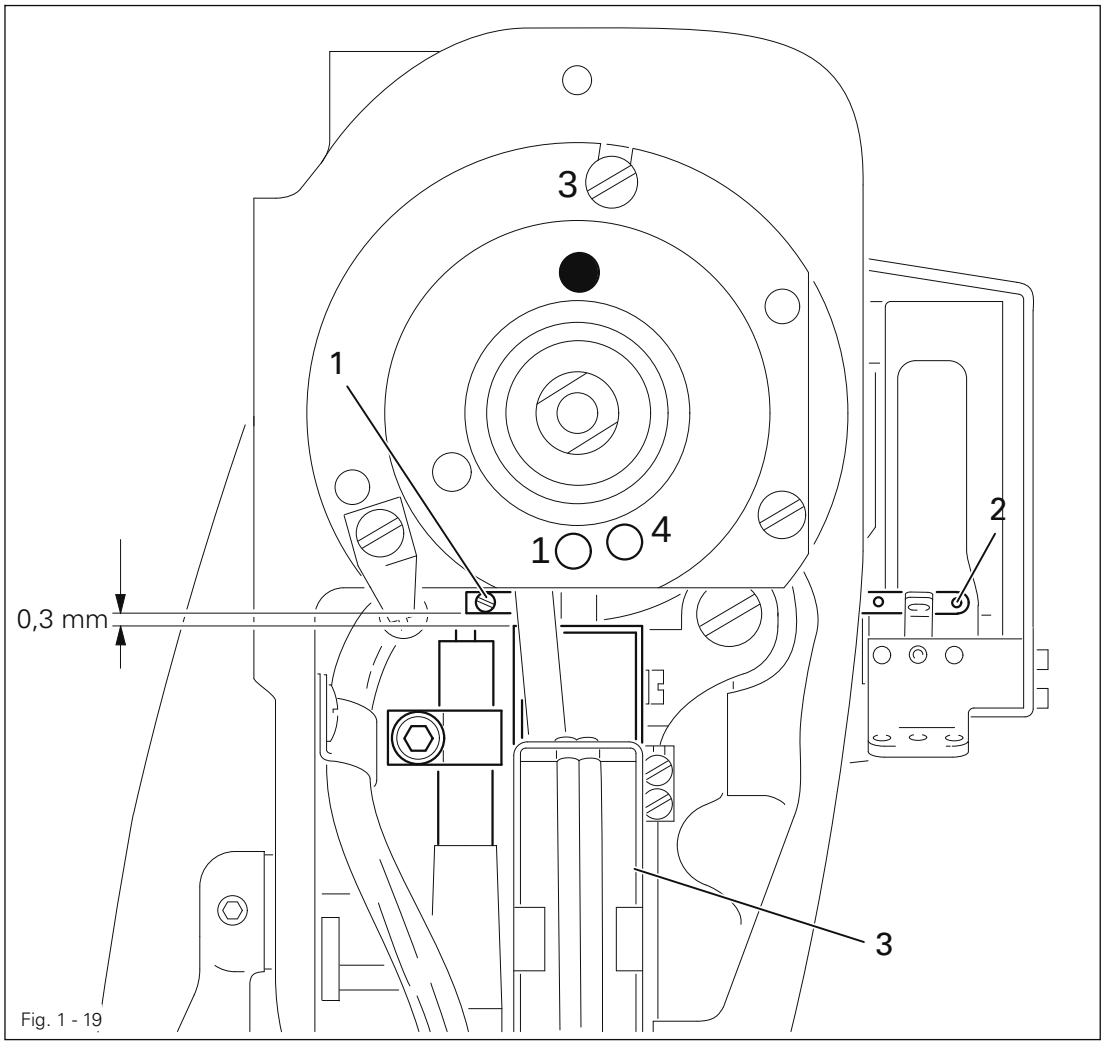


Fig. 1 - 19

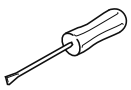

- By turning the handwheel make screw **1** accessible and loosen it slightly.
- Bring needle bar to BDC.
- Adjust take-up lever **2** according to **requirement 1**.
- Tighten screw **1** in compliance with **requirement 2**.

## 1.05.20 Basic setting of the needle thread regulator and the thread guide

**Requirement**

1. With the needle bar at BDC (pin in hole **3**) the eye of the needle thread regulator **1** and the adjustment hole of the take-up lever **4** must be in line.
2. The thread guide **2** must be vertical and attached with a screw in the center of the elongated hole.

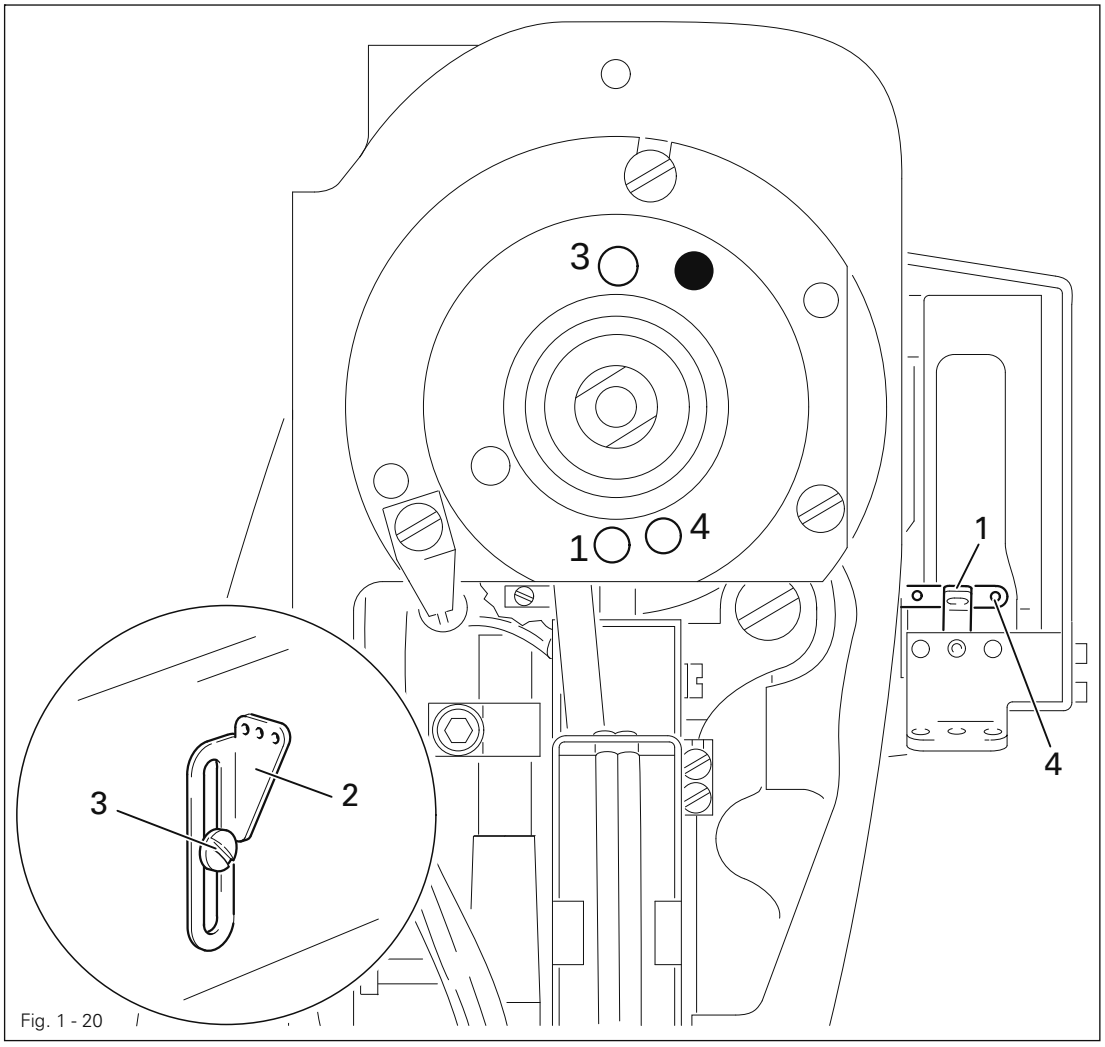


Fig. 1 - 20

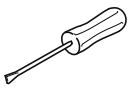

- Bring the needle bar to bottom dead center.
- After loosening the screw, adjust the needle thread regulator **1** according to **requirement 1.**
- Tighten the screw of the needle thread regulator.
- Align thread guide **2** (screw **3**) according to **requirement 2**.



Depending on the type of material and thread used, the basic setting may have to be modified.

## 1.05.21 Adjustment of the backtacking mechanism (only for machines with -911/..)

**Requirement**
The face side of the backtacking mechanism **1** must be in line with the bedplate surface of the machine.

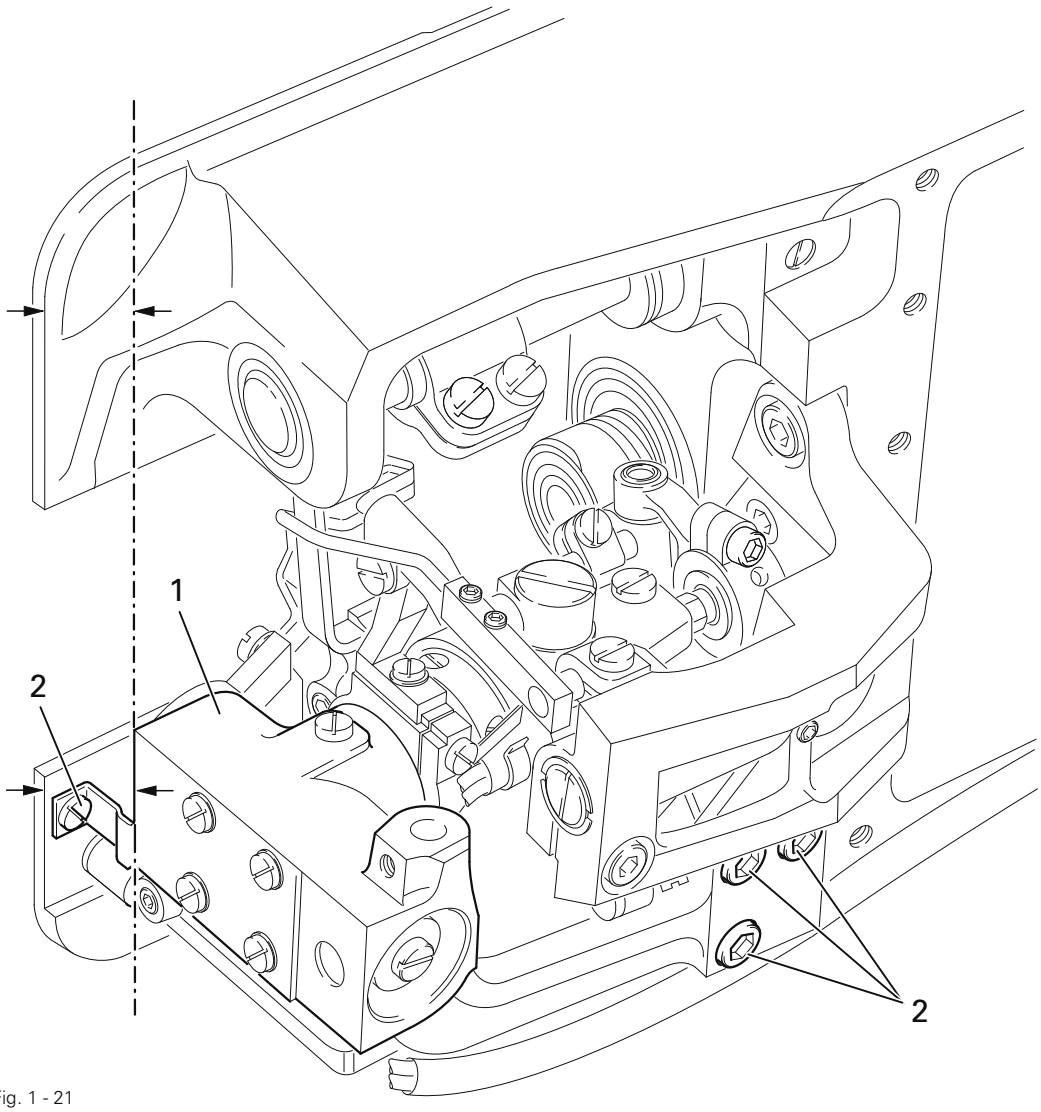


Fig. 1 - 21

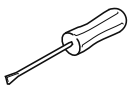

- Adjust backtacking mechanism **1** (screws **2** and **3**) according to the **requirement**.

## 1.05.22 Spreader drive (only for machines with -911/..)

**Requirement**
With the needle bar at bottom dead center (pin in hole **3**) the spreader link **3** must be at its rear point of reversal (see arrow).

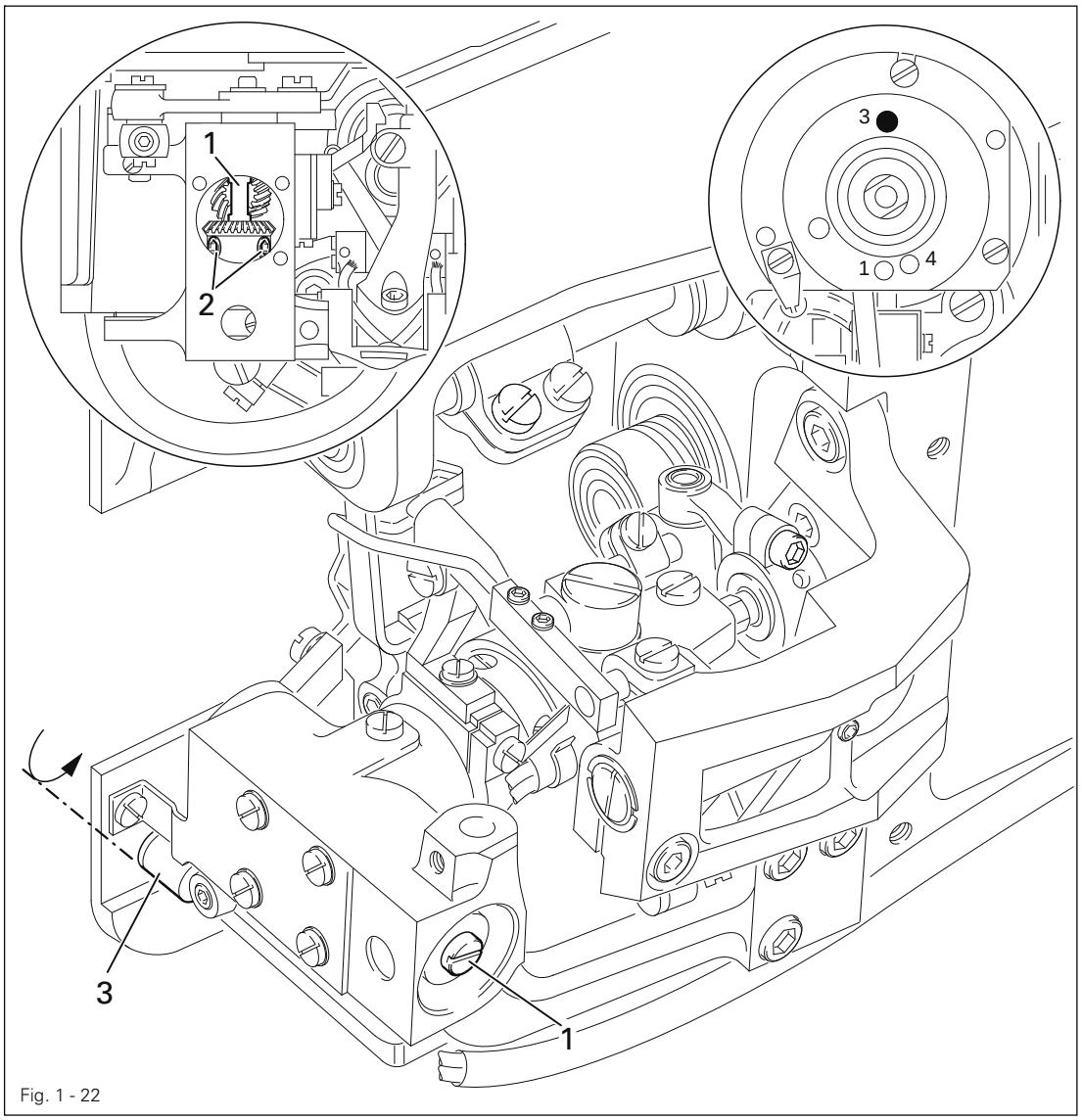


Fig. 1 - 22

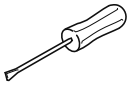

- Bring the needle bar to bottom dead center.
- Turn shaft **1** (screws **2**) according to the **requirement**.

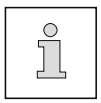

When tightening the shaft, make sure the gears have enough play!

## 1.05.23 Spreader height (only for machines with -911/..)

**Requirement**
When the tip of spreader **1** is above the looper, there must be a clearance of **0.3 mm** between the back of the looper and the underside of the spreader **1**.

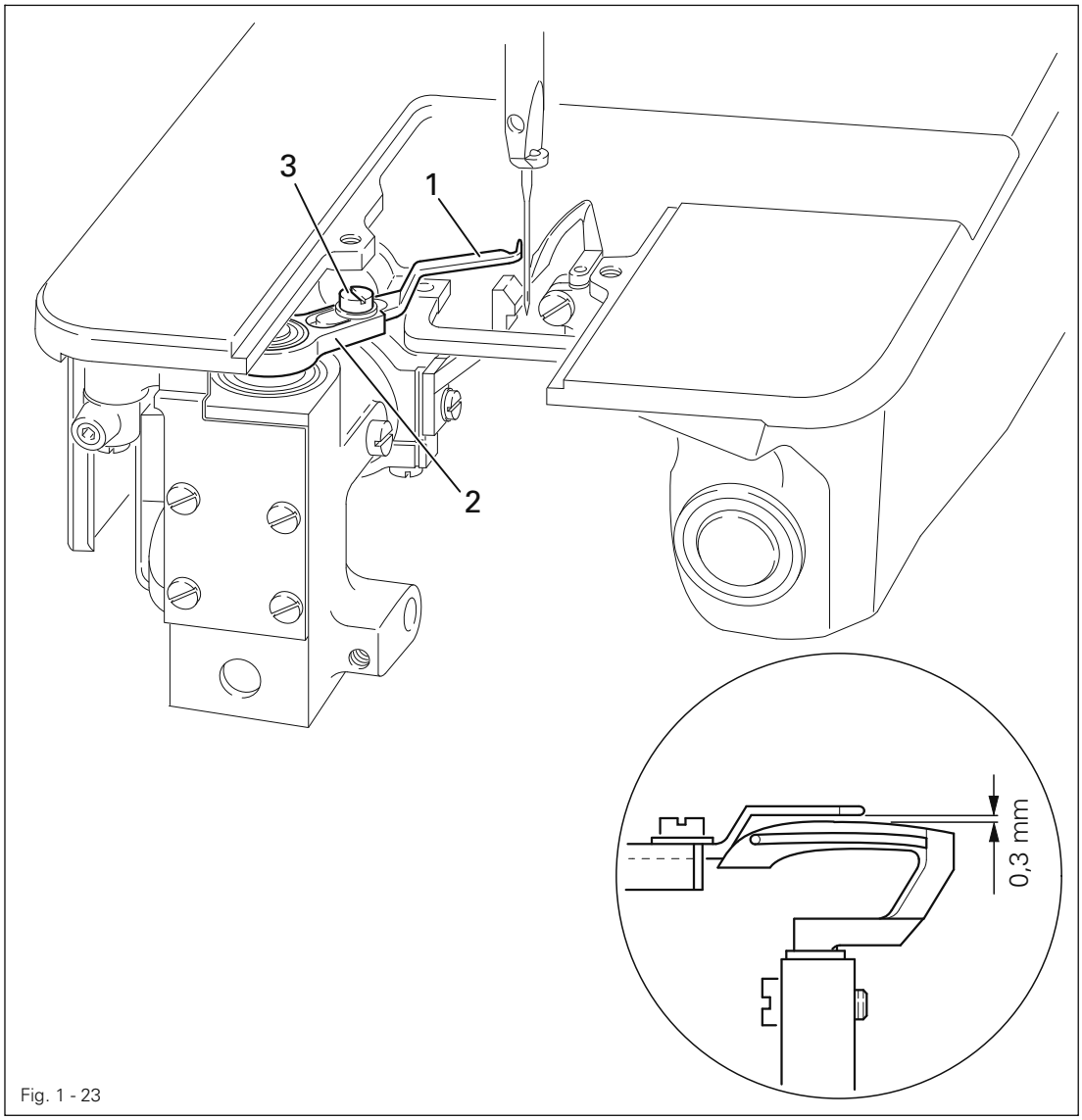


Fig. 1 - 23

- Turn the balance wheel until the tip of the spreader **1** is above the looper.
- Remove the holder **2** (screw **3**) and adjust the height of the spreader according to the **requirement** by inserting an appropriate spacer.

| Spacer | Order-No. |
|---|---|
| 0,3 mm | 91-170 153-05 |
| 0,5 mm | 91-172 357-05 |

## 1.05.24 Spreader motion and spreader to needle clearance (only for machines with -911/..)

**Requirement**
When the descending needle is on a level with the back of the looper, the right side of the needle must be in line with the edge of the thread catcher cutout, as seen in feed direction.

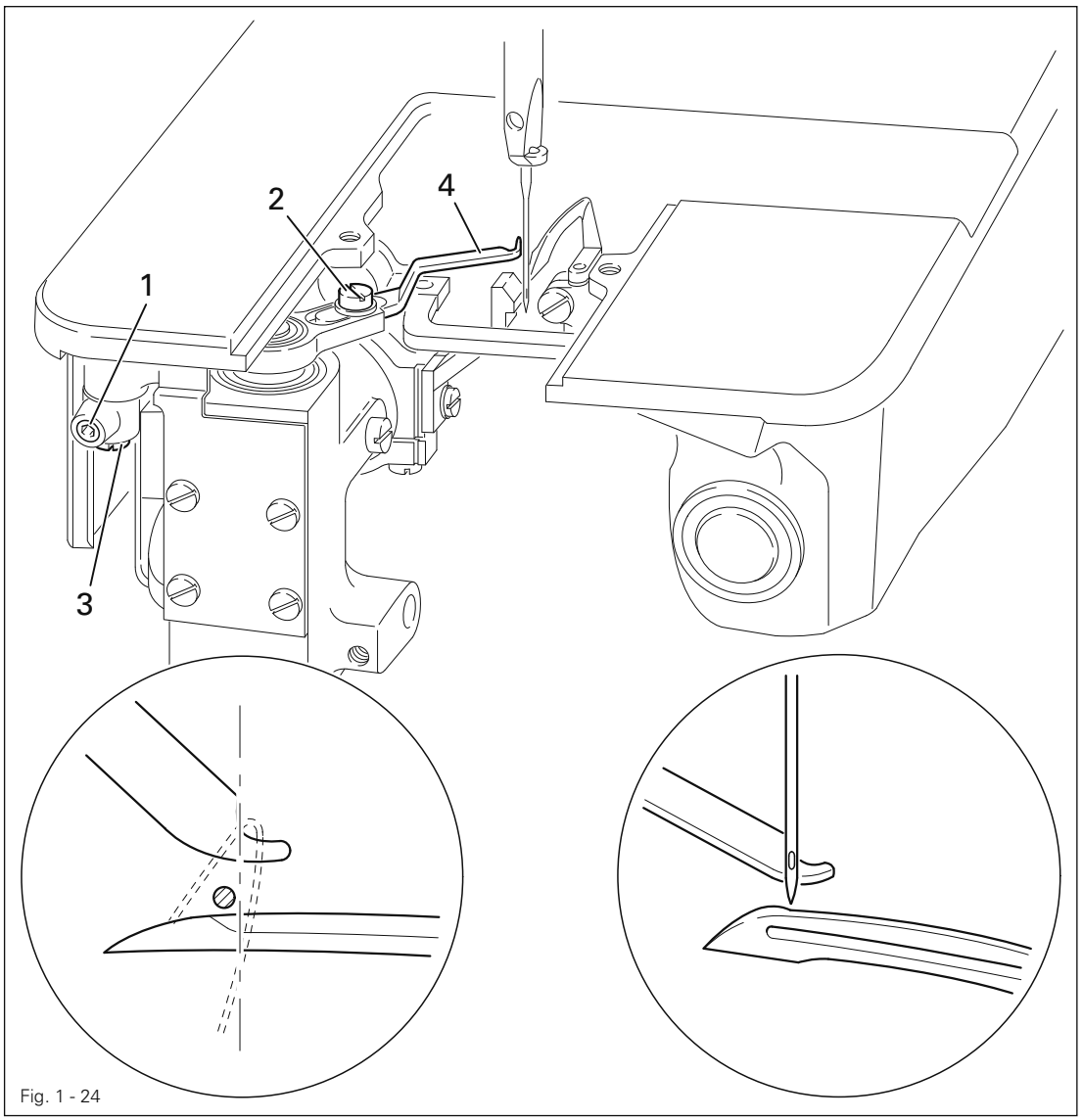


Fig. 1 - 24

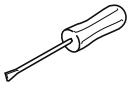

- Turn the balance wheel in sewing direction until the needle point is level with the back of the looper.
- Loosen screws **1** and **2**.
- Turn the eccentric stud **3** so that its lobe is pointing in sewing direction.
- Adjust eccentric stud **3** and spreader **4** according to the **requirement**.
- Tighten screws **1** and **2**.
- Carry out a functional test, see **Chapter 1.05.25 Functional sewing test.**

## 1.05.25 Functional sewing test (only for machines with -911/..)

**Requirement**
As seen in feed direction, the spreader **1** should reliably pick up the rear part of the needle thread loop and the looper thread.

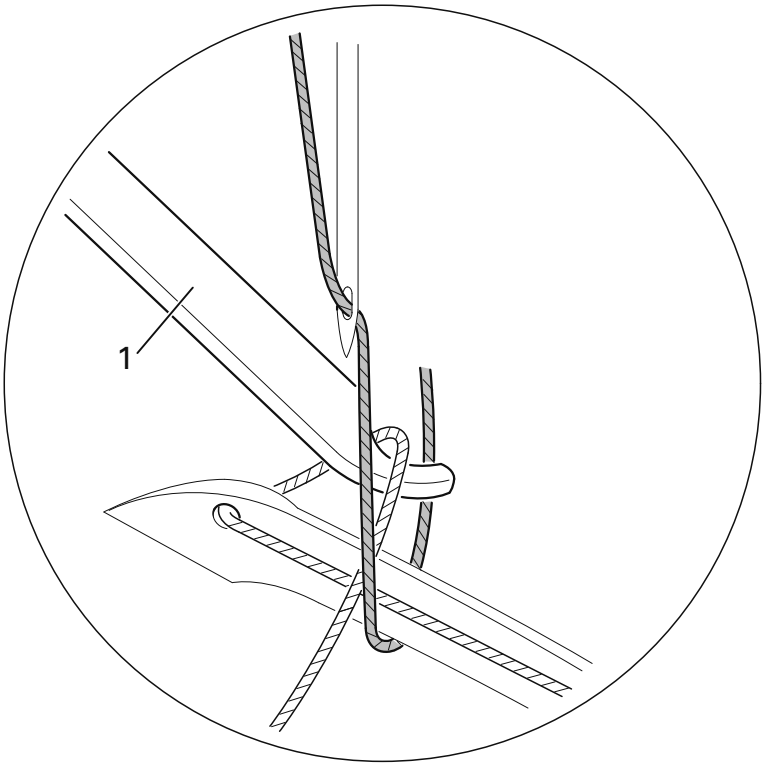


Fig. 1 - 25

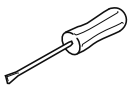

- Thread the machine, place fabric under the presser foot and lower the presser foot.
- Turn the balance wheel in sewing direction with depressed reverse-feed control, and check the compliance with the **requirement**.
- If required, readjust the spreader settings.

## 1.05.26 Looper thread regulator and looper thread take-up

**Requirement**

1. The distance between the front edge of looper thread regulator **1** and the rear needle plate edge guide must be **29 mm**.
2. The front edges of the thread take-up device **3** and the thread regulator **1** must be about **8 mm** apart.

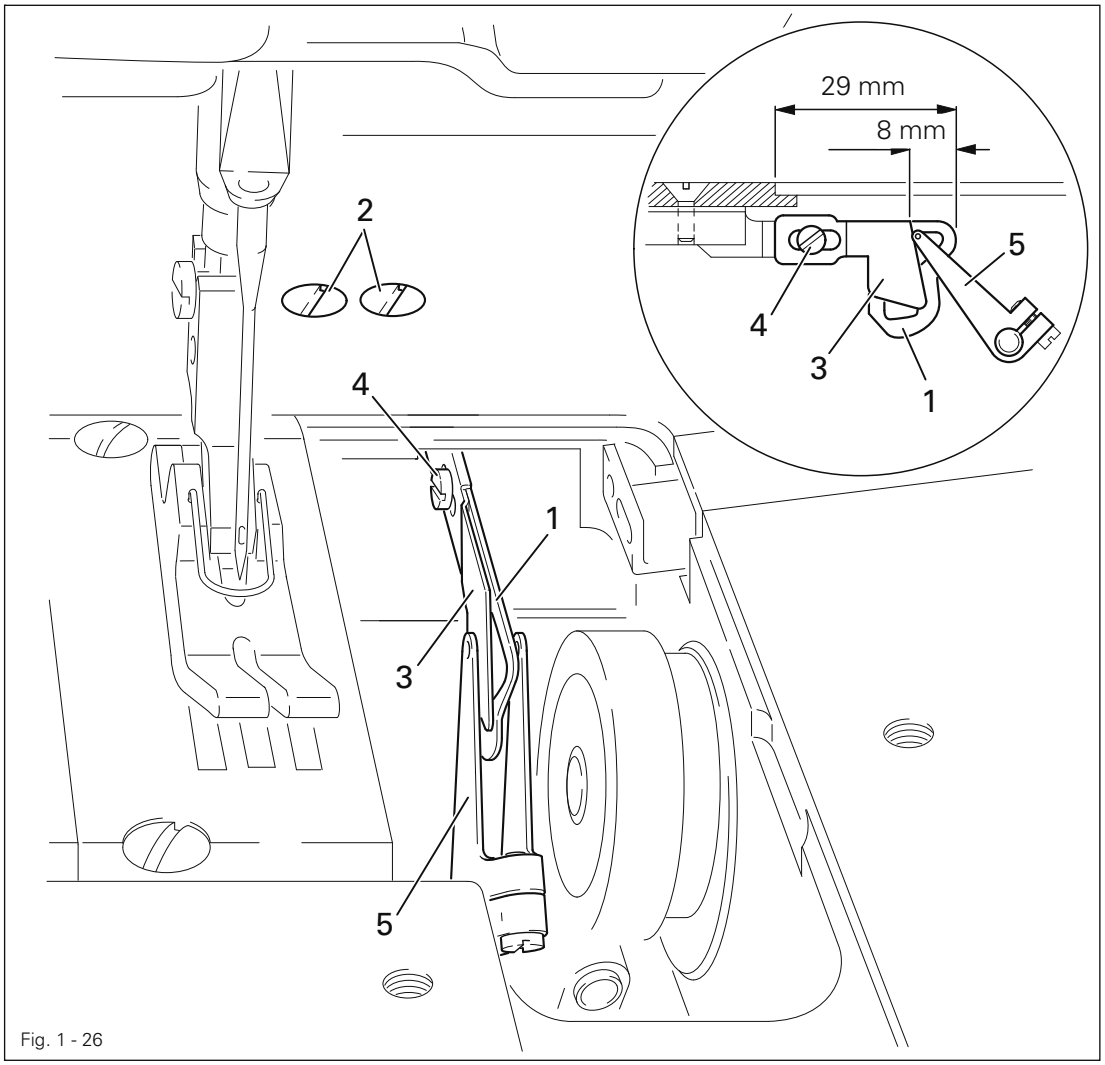


Fig. 1 - 26

- Adjust thread regulator **1** (screws **2**) according to **requirement 1**.
- Adjust thread take-up device **3** (screw **4**) according to **requirement 2**.

Depending on the type of material and thread used, the basic setting may have to be modified.

## 1.05.27 Looper thread puller

**Requirement**
With the needle bar in top dead center (pin in hole **1**) both eyes of looper thread puller **1** must be at the front edge of the thread take-up device **4**.

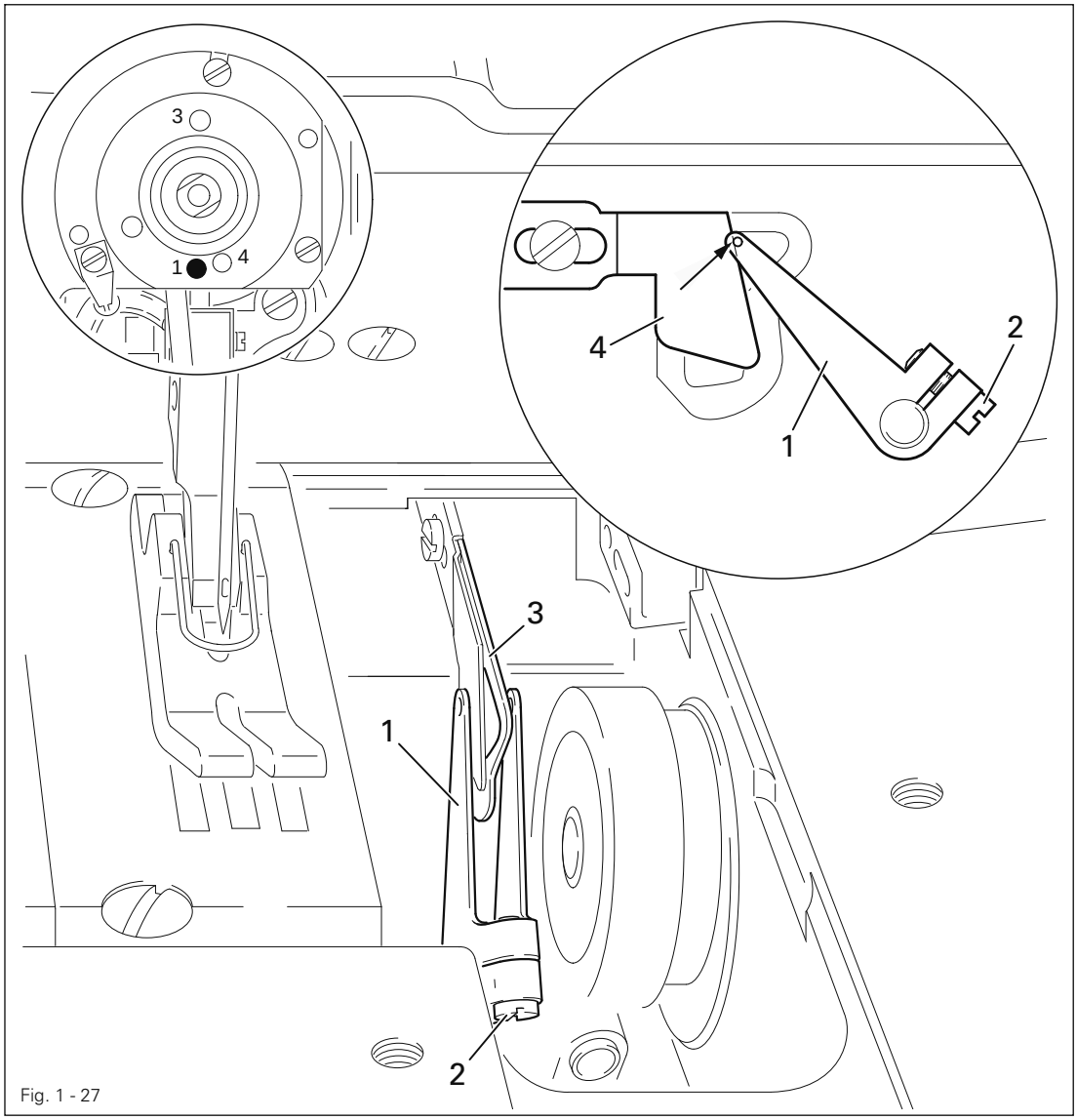


Fig. 1 - 27

- Bring needle bar to top dead center.
- Turn thread puller **1** (screw **2**) according to the **requirement**, making sure that the prongs of thread puller **1** are in the middle of the thread regulator **3**.

Depending on the type of material and thread used, the basic setting may have to be modified.

## 1.05.28 Clearance between presser foot and needle plate

**Requirement**
With the presser bar lifter **1** raised, there must be a clearance of **7 mm** between the presser foot and the needle plate.

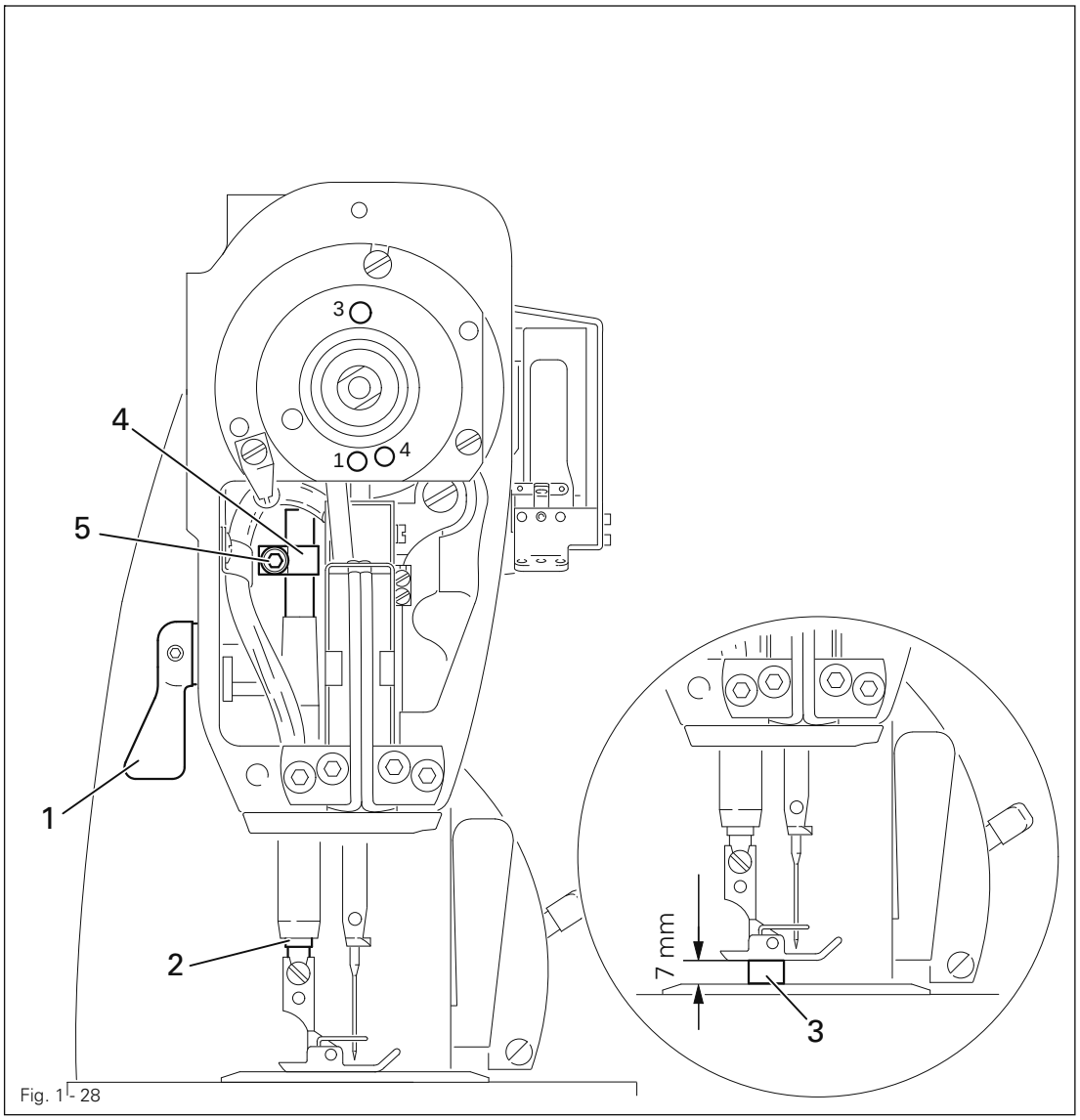

Fig. 1- 28

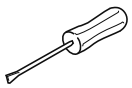

- Raise the presser bar lifter **1**.
- Lift presser rod **2** and push the **7 mm** thick blade of the adjustment gauge **3** (Order No. **61-111 642-19**) under the presser foot.
- Push down presser rod lifter bracket **4** (screw **5**) until contact is achieved.

## 1.05.29 Presser foot pressure

**Requirement**
The material feed should function perfectly at all times without any pressure marks occurring on the fabric.

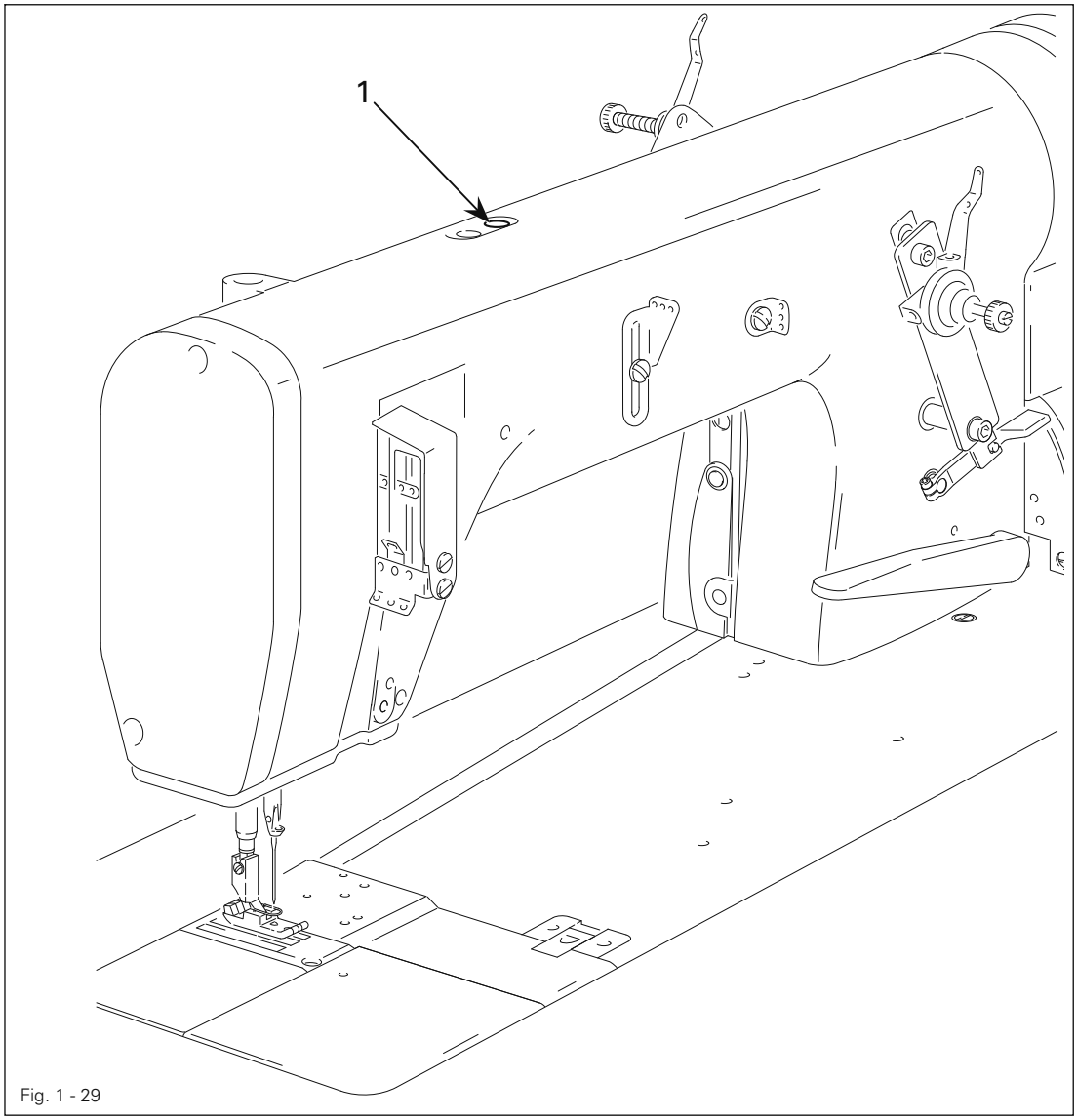


Fig. 1 - 29

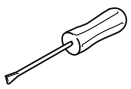

- Turn screw **1** according to the **requirement**.

## 1.05.30 Knee lever rest position

**Requirement**
When in its rest position, the knee lever connecting rod must be at right angles to the bedplate.

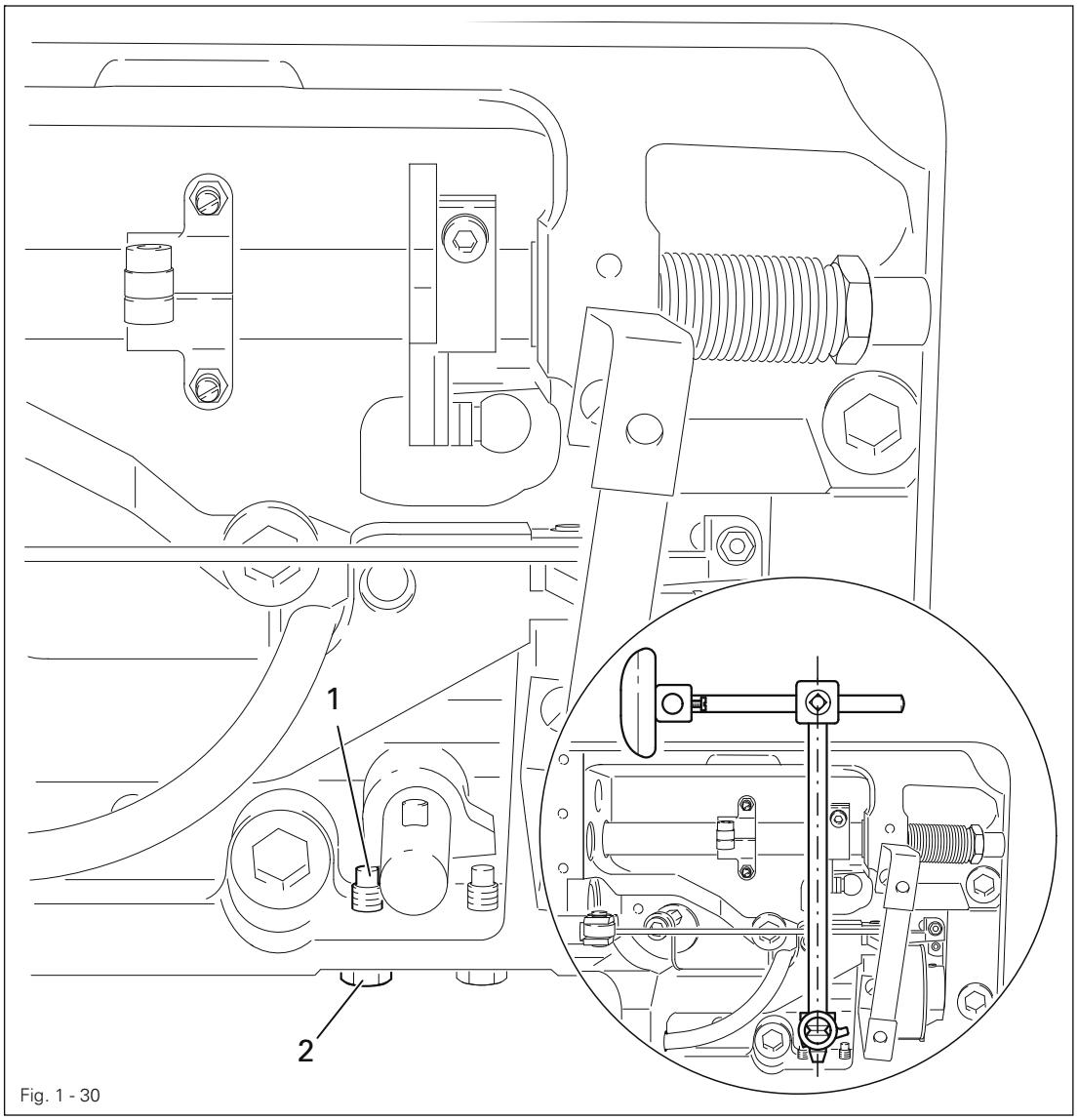


Fig. 1 - 30

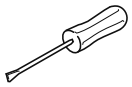

- Raise the presser bar lifter.
- Turn screw **1** (nut **2**) according to the **requirement**.

## 1.05.31 Knee lever play

**Requirement**
When the presser foot is resting on the needle plate (feed dog beneath the needle plate), there must be a clearance of **about 1.3 mm** between the lifting lever **3** and lifting piece **4**.

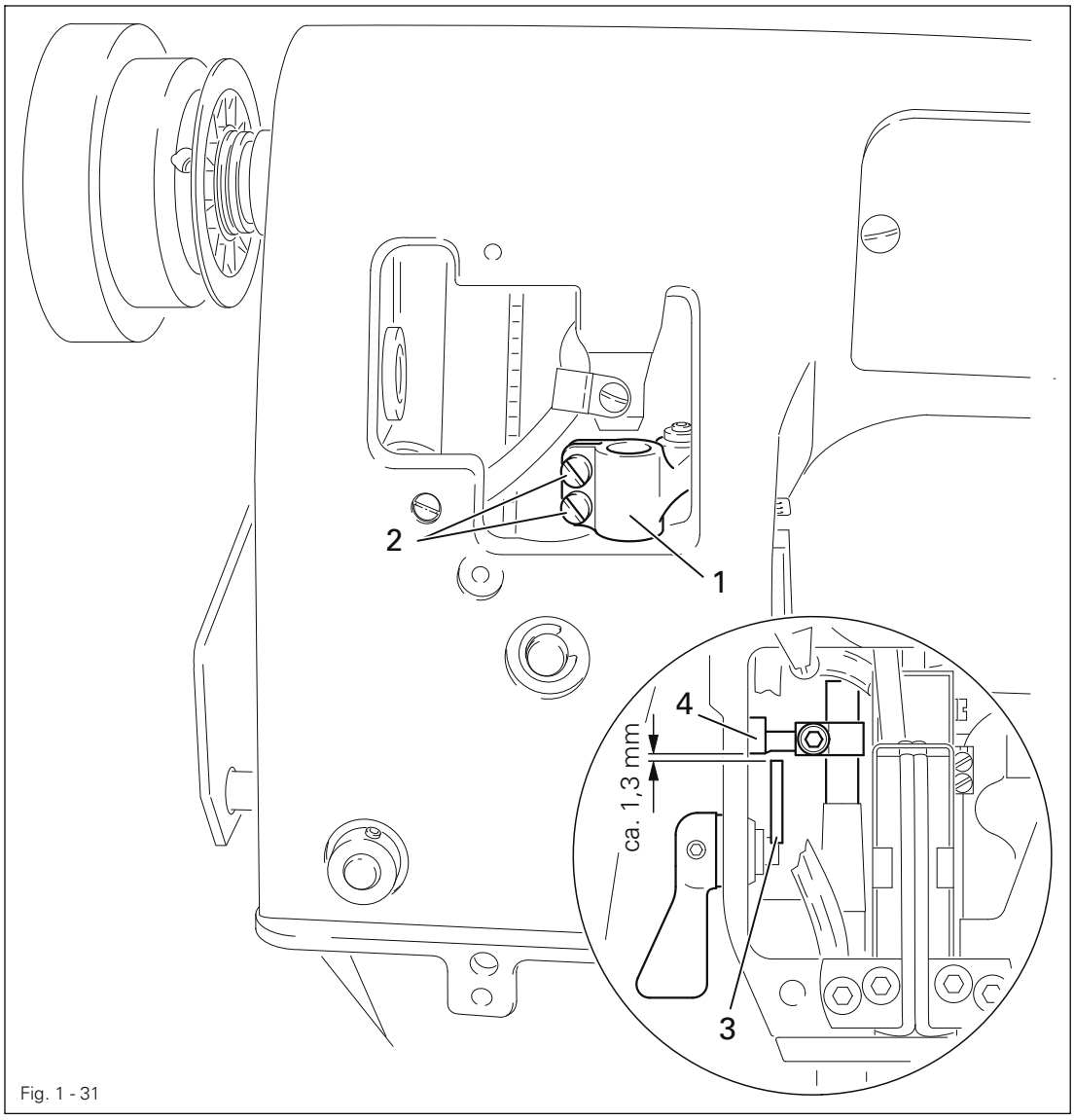


Fig. 1 - 31

- Lower the presser foot onto the needle plate
- Adjust crank **1** (screws **2**) according to the **requirement**.

When tightening crank **1**, make sure that the knee lever shaft has no vertical play.

## 1.05.32 Knee lever stop

**Requirement**

When the knee lever is fully operated

1. the presser foot must be lifted **approx. 7 mm**, or on H-model machines **approx. 9 mm**, from the needle plate and
2. the presser bar lifter should drop by its own weight.

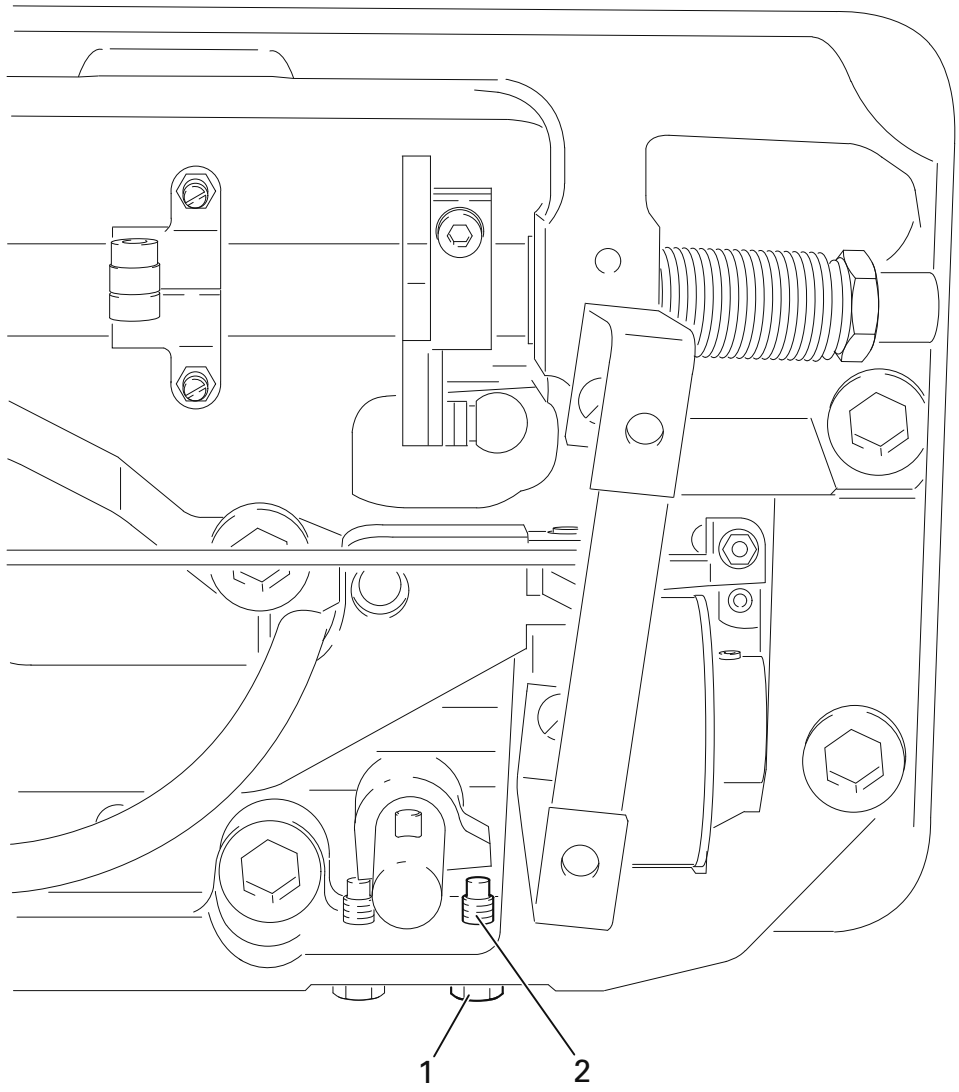


Fig. 1 - 32

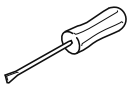

- Raise the presser foot by means of the presser bar lifter.
- Adjust screw **1** (nut **2**) according to the **requirement**.

## 1.06 Adjusting the thread-trimming device -900/71

### 1.06.01 Pre-adjust the thread catcher

**Requirement**

1. Between the point of the thread catcher **4** and the front edge of the mounting plate **1** there must be a clearance of **32.5 - 33 mm.**
2. The guide plates **5** must be parallel to the mounting plate **1**.
3. The thread catcher **4** should move freely and with little play.

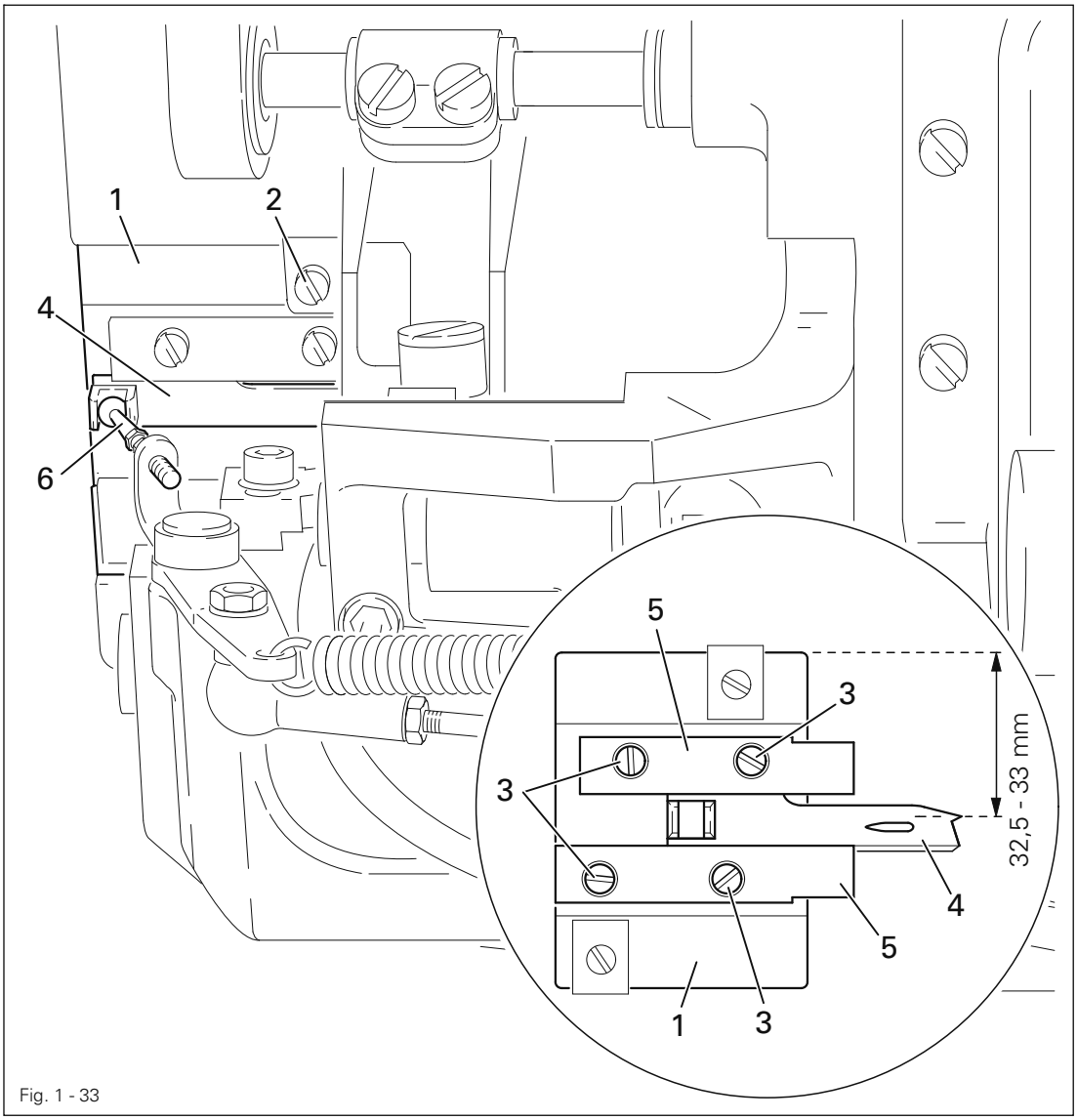


Fig. 1 - 33

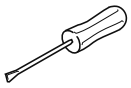

- Remove mounting plate **1** (screws **2**).
- Loosen screws **3**.
- Adjust thread catcher **4** according to **requirement 1**.
- Align guide plates **5** according to **requirements 2** and **3** and tighten screws **3**.
- Making sure that the ball stud **6** engages in the actuator of thread catcher **4**, unscrew the mounting plate **1**.

## 1.06.02 Positioning the ball stud

**Requirement**

In a vertical position the ball stud **1** must

1. be located in the middle of actuator **5** and
2. have a clearance of **0.5 mm** to the bottom of actuator **5**.

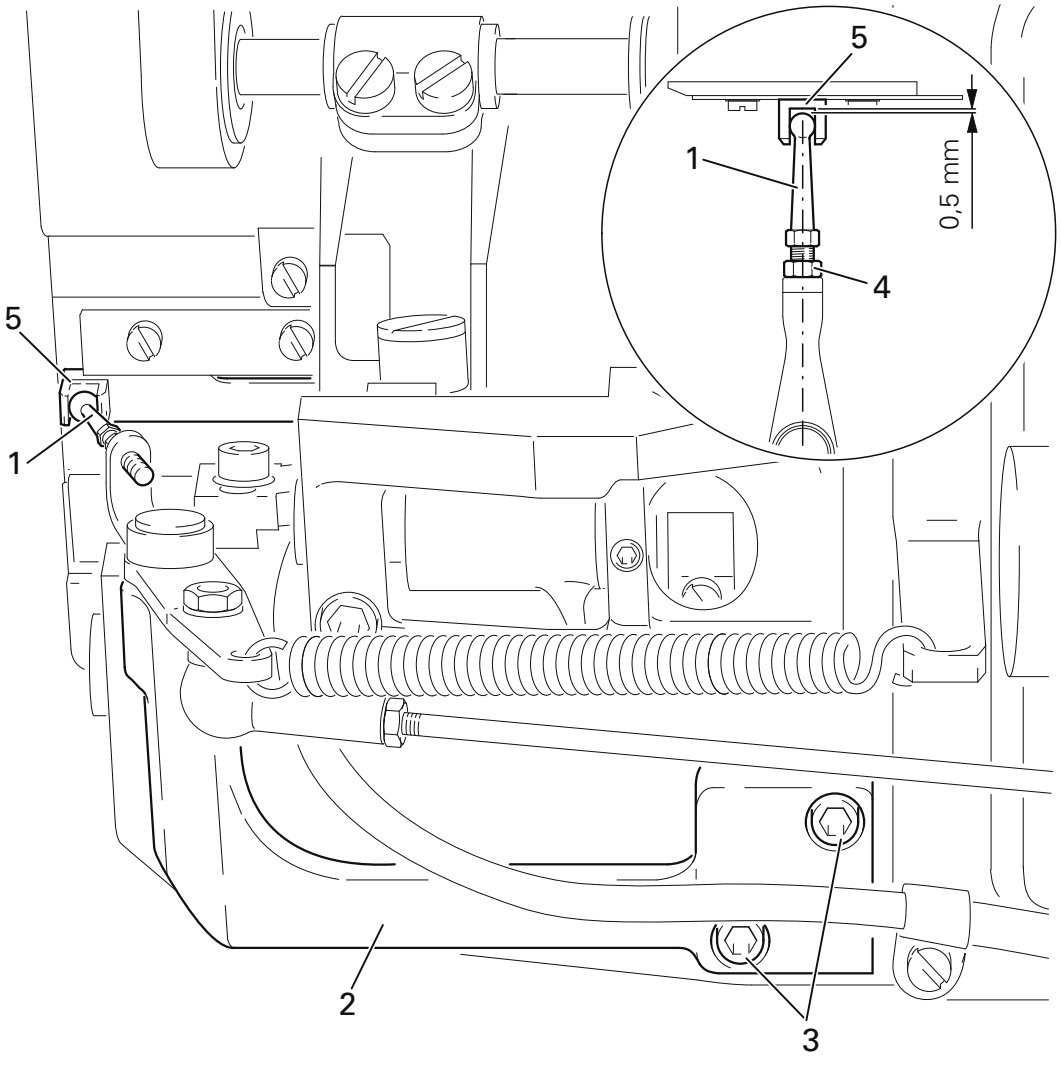


Fig. 1 - 34

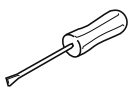

- Set ball stud **1** in a vertical position.
- Adjust bracket **2** (screws **3**) according to **requirement 1**.
- Turn ball stud **1** (nut **4**) according to **requirement 2**.

## 1.06.03 Position of thread catcher to needle

**Requirement**
When the thread-trimming device is in a neutral position, there must be a clearance of **7 mm** between the point of the thread catcher **4** and the needle center.

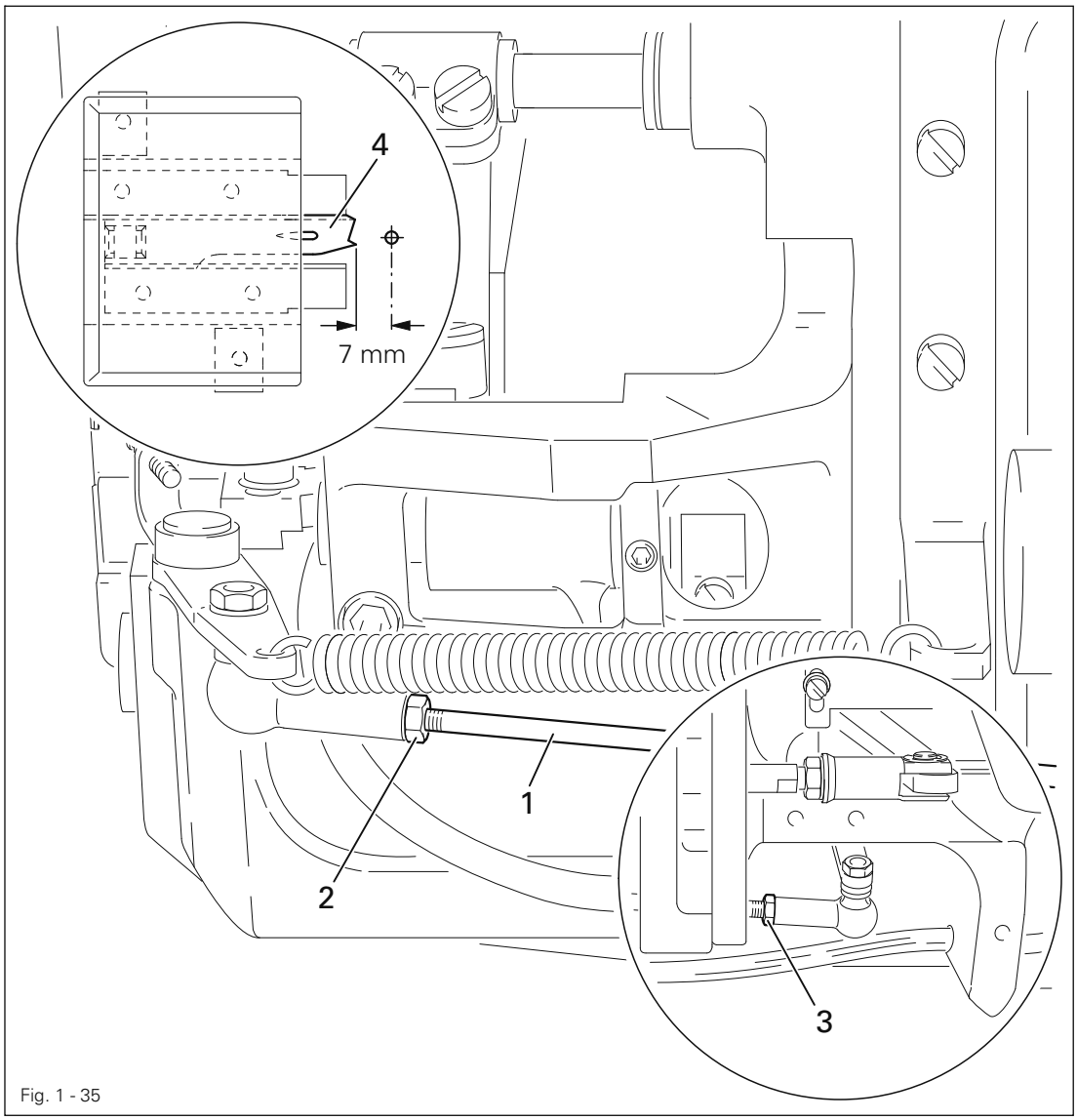


Fig. 1 - 35

- Bring the thread-trimming device into its neutral position.
- Turn linkage rod **1** (nut **2**, nut **3** with left-handed thread) according to the **requirement**.

## 1.06.04 Thread catcher interlock

**Requirement**

1. When the needle bar is at TDC, the roller **3** must be located in the center of the cutout of the interlocking cam **2**.
2. When the thread-trimming device is in a neutral position and the needle bar is at BDC, there must be a clearance of **0.5 - 1 mm** between the interlocking cam **2** and the roller **3**.

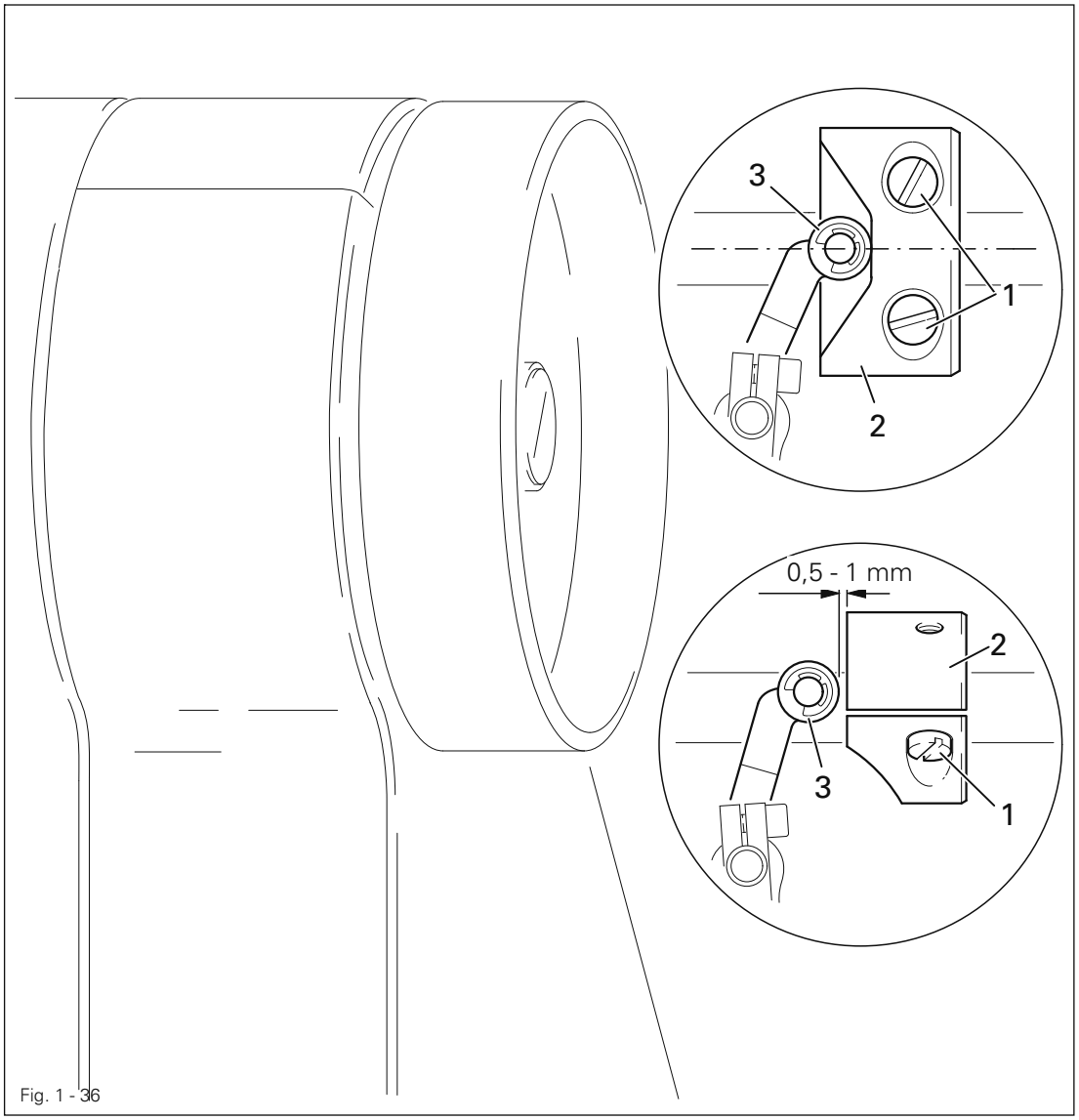


Fig. 1 - 36

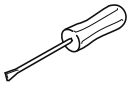

- Loosen screws **1** so that the interlocking cam can be turned on its shaft with resistance.
- Bring the needle bar to TDC.
- In this position turn the interlocking cam **2** according to **requirement 1**.
- Bring the thread-trimming device to its neutral position and the needle bar to BDC.
- Adjust interlocking cam **2** according to **requirement 2** and tighten screws **1**.

## 1.06.05 Tension release

**Requirement**
When the cylinder is fully actuated, there must be a clearance of about **0.5 mm** between the top end of the elongated hole in plate **1** and the guide pin **3**.

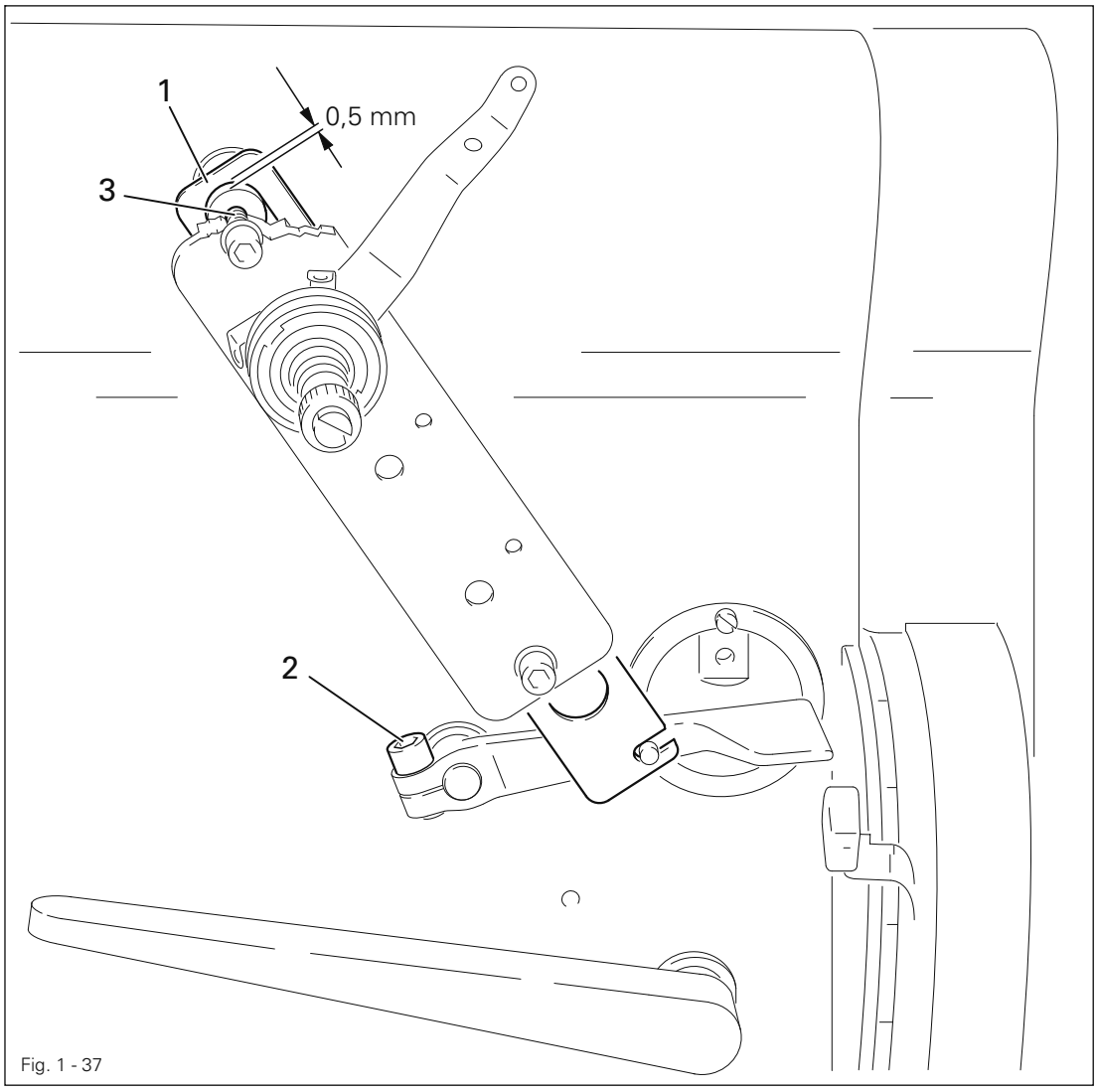

Fig. 1 - 37

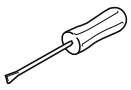

- Fully actuate the cylinder of the thread-trimming device.
- Adjust plate **1** (screw **2**) according to the **requirement**.

## 1.06.06 Cutting test

Requirement

1. The point of the thread catcher **2** must pick up the looper thread and the rear part of the needle thread loop reliably.
2. When the cover plate **1** is removed, the threads must remain undamaged.
3. When the cover plate **1** is in position, the thread catcher **2** must move between the knife **3** and the clamp springs **5**, during which the threads are properly cut and bound.

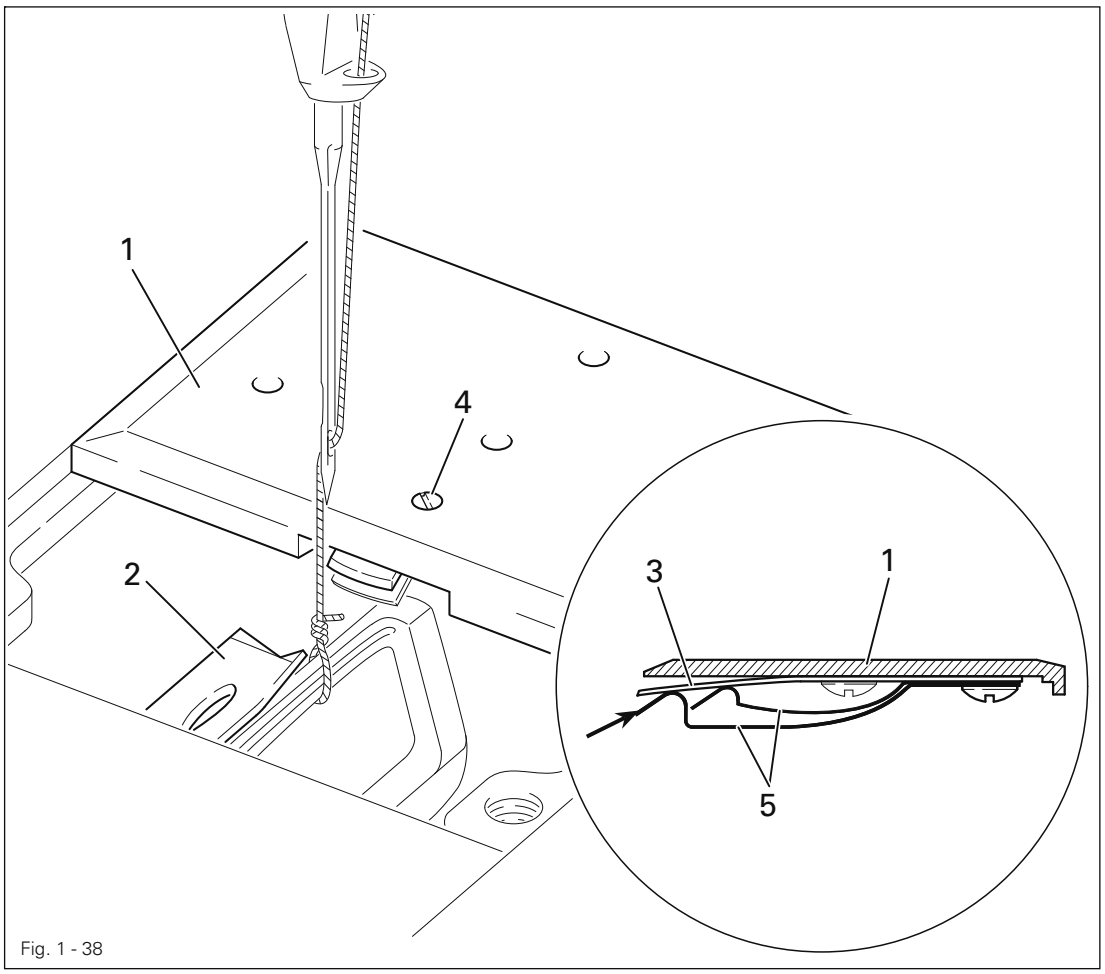


Fig. 1 - 38

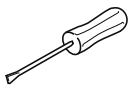

- Place material under the presser foot and sew a few stitches.
- Remove cover plate **1**.
- Position the needle as in **Chapter 1.06.04 Thread catcher interlock**.
- Operate the cutting cylinder manually, checking **requirements 1** and **2**.
- If necessary, readjust thread catcher **2** accordingly.
- Screw on cover plate **1**.
- Operate cutting cylinder again, checking **requirement 3**.
- If necessary, carefully turn screw **4** according to **requirement 3**.

Consult the instruction manual for the drive for a description of the parameter settings and a list of the parameters.

## 2 Circuit diagrams

### 2.01 Reference list for the Circuit diagrams 91-191 501-95

| | |
|---|---|
| A1 | Control unit Quick P40 ED |
| A2 | Control panel BDF S3 |
| A14 | Sewing head recognition system (OTE) |
| | |
| H1 | Sewing lamp (optional) |
| H10 | LED stitch counter |
| | |
| M1 | Sewing motor |
| | |
| Q1 | Main switch |
| | |
| S1 | Manual backtacking key |
| S1.1 | Pedal speed control unit |
| S6 | Start inhibitor (E6 stop) |
| | |
| X0 | PC-interface (RS 232) |
| X1 | Motor |
| X2 | Incremental transducer |
| X2.1 | Incremental transmitter adapter |
| X2.2 | Synchronizer adapter |
| X2.3 | Y5-911/.. backtacking device |
| X3 | Speed control unit |
| X3.1 | Y2 thread trimmer -900/.. |
| X4 | A2 Control panel BDF S3 |
| X4.1 | Y4 automatic foot lift ( -910/.. ) |
| X5 | Out-/input |
| X5.1 | S1 Manual backtacking key |
| X6 | Bobbin thread monitor (optional) |
| X7 | Photoelectric barrier (optional) |
| X8 | Y8 thread tension release (FSL) |
| X22 | Y2 thread trimmer -900/.. |
| X24 | Y4 automatic foot lift ( -910/.. ) |
| X25 | Y5 backtacking device ( -911/.. ) |
| X28 | Y8 thread tension release (FSL) |
| X50 | A14 Sewing head recognition system (OTE) |
| | |
| Y2 | thread trimmer -900/. |
| Y4 | automatic foot lift ( -910/.. ) |
| Y5 | backtacking device ( -911/.. ) |
| Y8 | thread tension release (FSL) |

2.02 Circuit diagrams 91-191 501-95

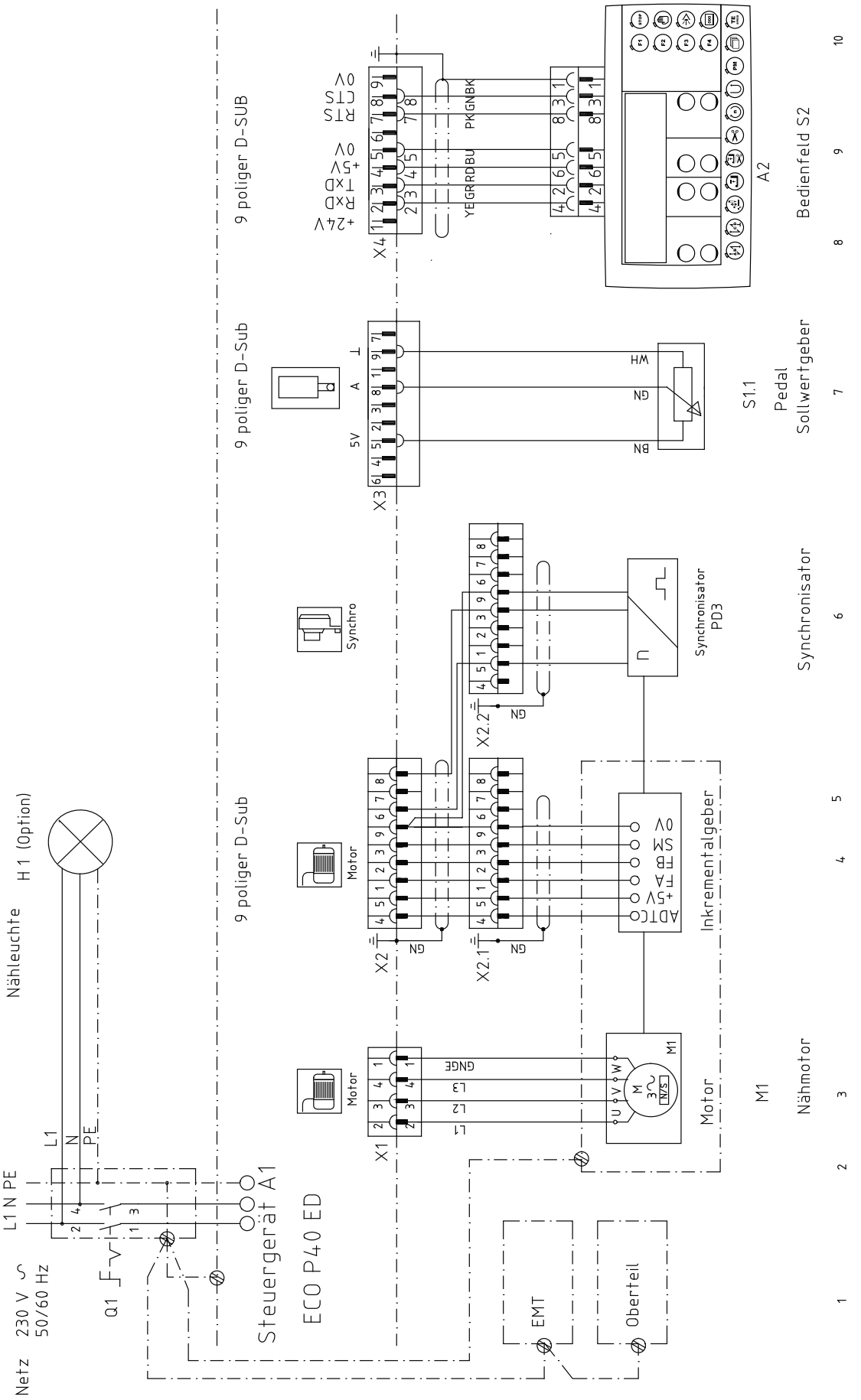

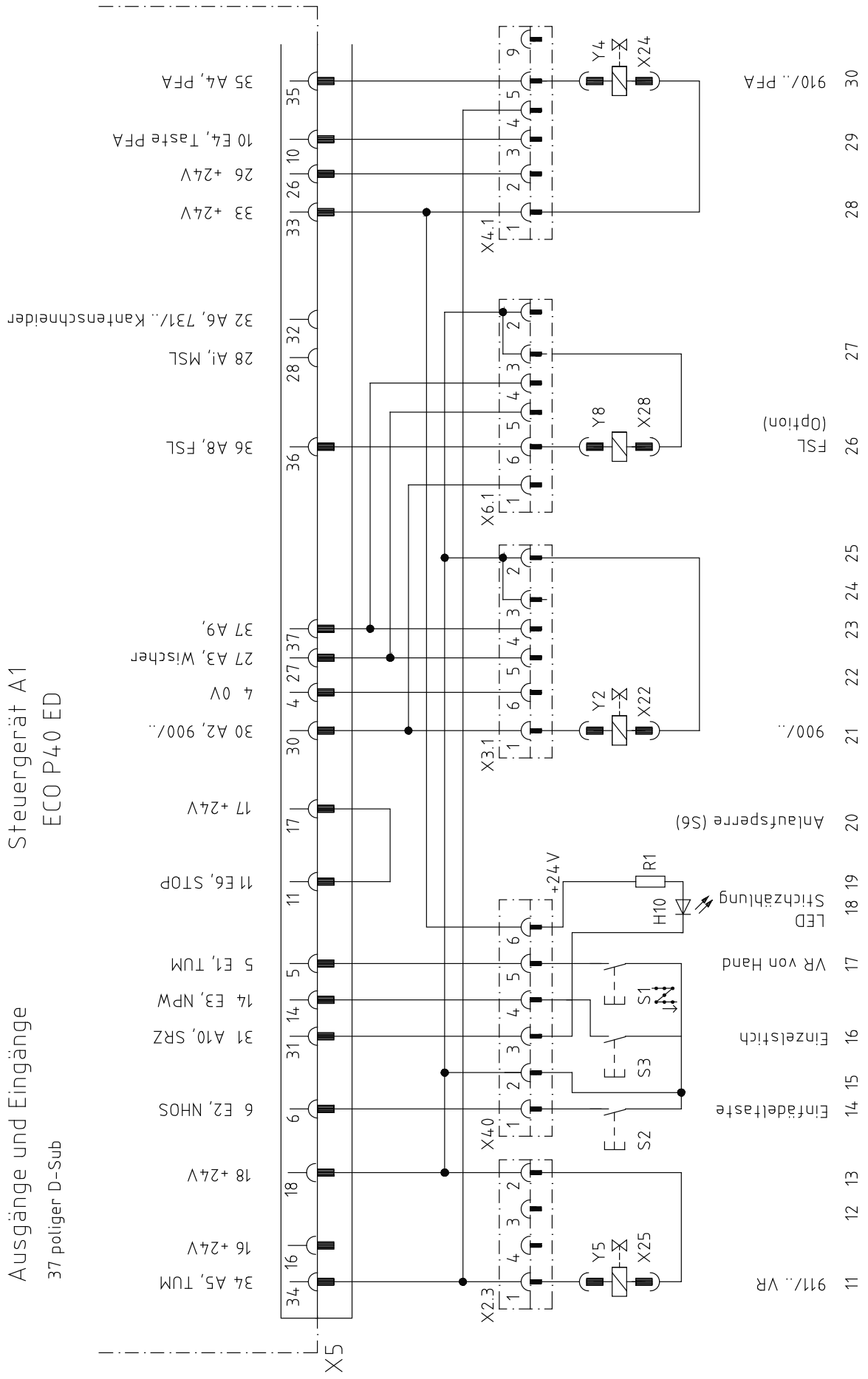
Steuergerät A1
ECO P40 ED
Ausgänge und Eingänge
37 poliger D-Sub
X5
35 A4, PFA
10 E4, Taste PFA
26 +24V
33 +24V
32 A6, 731/.. Kantenschneider
28 A1, MSL
36 A8, FSL
37 A9,
27 A3, Wischer
4 0V
30 A2, 900/..
17 +24V
11 E6, STOP
5 E1, TUM
14 E3, NPW
31 A10, SRZ
6 E2, NHOS
18 +24V
16 +24V
34 A5, TUM
X4.1
X6.1
X3.1
X40
X2.3
Y4
X24
Y8
X28
Y2
X22
Y5
X25
+24V
R1
H10
S1
S3
S2
910/.. PFA
FSL
(Option)
900/..
Anlaufsperre (S6)
LED
Stichzählung
VR von Hand
Einzelstich
Einfädeltaste
911/.. VR

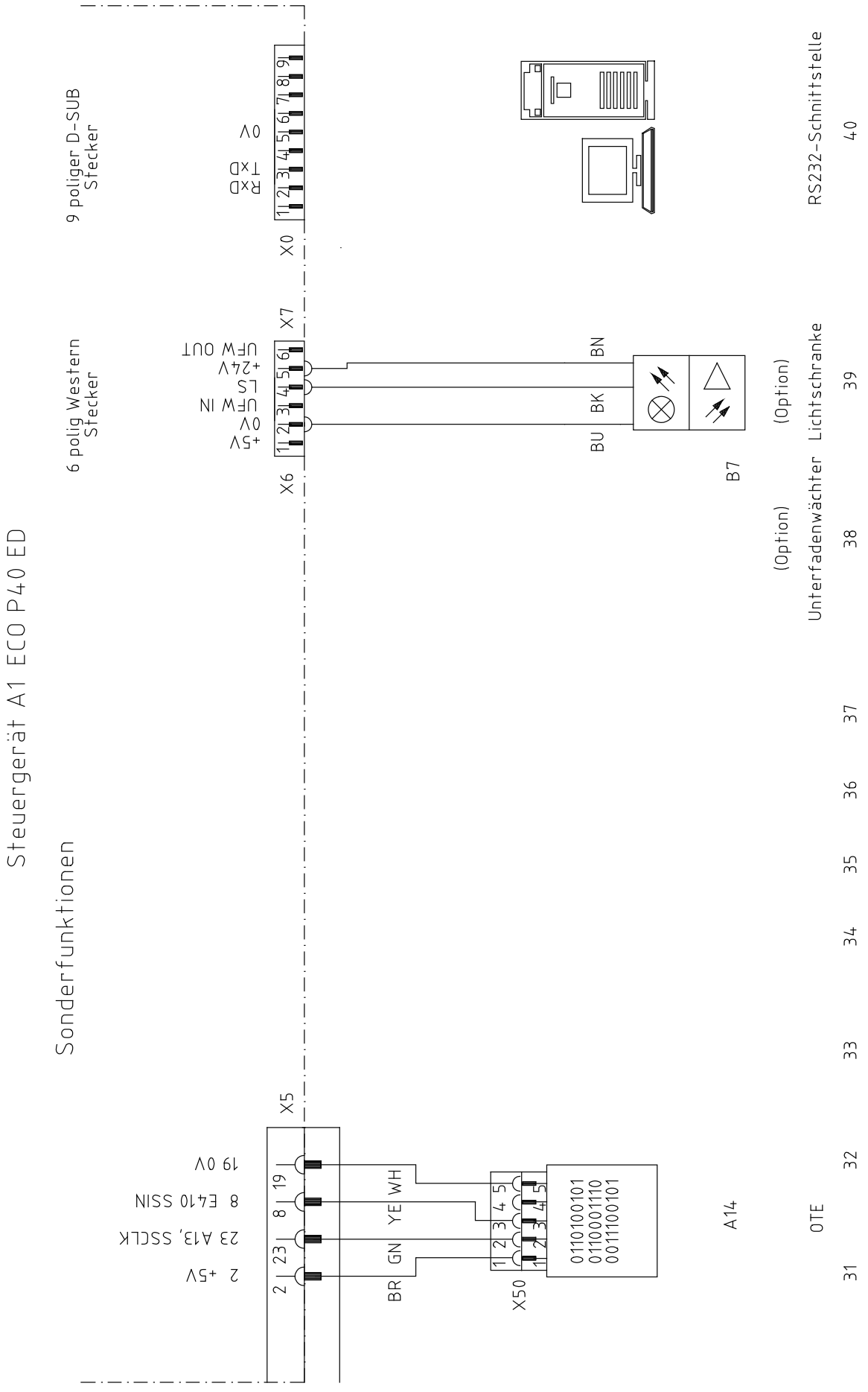
Steuergerät A1 ECO P40 ED
Sonderfunktionen
9 poliger D-SUB Stecker
RxD
TxD
0V
X0
6 polig Western Stecker
+5V
0V
UFW IN
LS
+24V
UFW OUT
X6
X7
BU
BK
BN
B7
RS232-Schnittstelle
(Option)
Lichtschranke
(Option)
Unterfadenwächter
X5
2 +5V
23 A13, SSCLK
8 E410 SSIN
19 0V
BR
GN
YE
WH
X50
0110100101
0110001110
0011100101
A14
OTE
31
32
33
34
35
36
37
38
39
40

PFAFF® Industrial



Europäische Union
Wachstum durch Innovation – EFRE




PFAFF Industriesysteme
und Maschinen AG

Hans-Geiger-Str. 12 - IG Nord
D-67661 Kaiserslautern

Phone: +49-6301 3205 - 0
Fax: +49-6301 3205 1386
E-mail: info@pfaff-industrial.com

**Hotlines:**

| | |
|---|---|
| Technical service: | +49-175/2243-101 |
| Application consultance: | +49-175/2243-102 |
| Spare-parts hotline: | +49-175/2243-103 |

Printed in Germany

© PFAFF Industriesysteme und Maschinen AG 2009, PFAFF is the exclusive trademark of VSM Group AB.PFAFF Industriesysteme und Maschinen AG is an authorized licensee of the PFAFF trademark.