PFAFF® Industrial

8303-040, -041, -042

INSTRUCTION MANUAL

This instruction manual applies to machines from the following serial numbers onwards:
2 628 774 →

296-12-18 768/002
Betriebsanleitung engl. 06.09



This Instruction Manual is valid for all models and subclasses listed in the chapter "Specifications ".

The reprinting, copying or translation of PFAFF Instruction Manuals, whether in whole or in part, is only permitted with our previous authorization and with written reference to the source.

PFAFF Industriesysteme
und Maschinen AG

Hans-Geiger-Str. 12 - IG Nord
D-67661 Kaiserslautern

Contents ..... Chapter - Page

1	Safety	1 - 1
1.01	Regulations	1 - 1
1.02	General notes on safety	1 - 1
1.03	Safety symbols	1 - 2
1.04	Important points for the user	1 - 2
1.05	Operating and technical personnel	1 - 3
1.05.01	Operating personnel	1 - 3
1.05.02	Technical personnel	1 - 3
1.06	Danger warning	1 - 4
2	Proper use	2 - 1
3	Specifications	3 - 1
4	Disposal of the machine	4 - 1
5	Transport, packing and storage	5 - 1
5.01	Transport to the customer's premises	5 - 1
5.02	Transport within the customer's premises	5 - 1
5.03	Disposal of packing	5 - 1
5.04	Storage	5 - 1
6	Explanation of the symbols	6 - 1
7	Controls	7 - 1
7.01	Summary of the controls	7 - 1
7.02	Main switch	7 - 2
7.03	Air shut-off valve	7 - 2
7.04	Regulator for the sealing tape feed motion and sealing speed	7 - 3
7.05	Regulator for the hot air pressure and the feed roller pressure	7 - 3
7.06	Sealing tape feed key	7 - 4
7.07	Sealing temperature control panel	7 - 4
7.08	Machine head keys and pedals	7 - 5
7.09	Potentiometer for the hot air nozzle swivel function	7 - 6
8	Installation and commissioning	8 - 1
8.01	Installation	8 - 1
8.01.01	Adjusting the table height	8 - 1
8.01.02	Fitting the sealing tape reel holder	8 - 2
8.01.03	Lampe anschließen	8 - 2
8.01.04	Connecting the pedals and the power supply	8 - 3
8.02	Commissioning	8 - 4
8.03	Switching the machine on / off	8 - 5

Contents

Contents ..... Chapter - Page

9 Setting up ..... 9 - 1
9.01 Inserting the sealing tape ..... 9 - 1
9.01.01 Adapting the sealing tape reel holder to the sealing tape reel ..... 9 - 1
9.01.02 Adjusting the sealing tape brake ..... 9 - 1
9.01.03 Inserting the sealing tape / adjusting the sealing tape width ..... 9 - 2
9.02 Adjusting the penetration depth ..... 9 - 3
9.03 Adjusting the sealing tape feed stroke ..... 9 - 3
9.04 Adjusting the swivel function of the hot air nozzle ..... 9 - 4
9.05 Adjusting the hot air pressure and the feed roller pressure ..... 9 - 4
9.06 Adjusting the sealing temperature and the sealing speed ..... 9 - 5

10 Heat sealing ..... 10 - 1
10.01 Heat-sealing principle ..... 10 - 1
10.02 Carrying out a sealing operation ..... 10 - 2
10.03 Malfunctions ..... 10 - 4

11 Care and maintenance ..... 11 - 1
11.01 Clean hot-air nozzle ..... 11 - 1
11.03 Emptying the water container of the air filter / cleaning the filter ..... 11 - 2
11.02 Checking / adjusting the air pressure ..... 11 - 2
11.04 Lubricating the drive chains ..... 11 - 3

12 Adjustment ..... 12 - 1
12.01 Notes on adjustment ..... 12 - 1
12.02 Tools, gauges and other accessories ..... 12 - 1
12.03 Height and lateral adjustment of the hot air nozzle ..... 12 - 2
12.04 Clearance between the hot air nozzle and the feed rollers ..... 12 - 3
12.05 Setting the angle of the hot air nozzle ..... 12 - 4
12.06 End stop of the hot air nozzle swivel unit ..... 12 - 5
12.07 Changing the heating cartridge ..... 12 - 6
12.08 Changing the temperature sensor ..... 12 - 7
12.09 Tensioning the drive chains ..... 12 - 9
12.10 Tensioning the toothed belt ..... 12 - 10
12.11 Changing the feed rollers ..... 12 - 10
12.12 Tape cutting device ..... 12 - 11
12.12.01 Knife ..... 12 - 11
12.12.02 Air jet setting ..... 12 - 12
12.13 Checking the fuses ..... 12 - 13

13 Circuit diagram ..... 13 - 1

1 Safety

1.01 Regulations

This machine was built in accordance with the European regulations listed in the conformity and manufacturer's declarations.
In addition to this instruction manual, also observe all generally accepted statutory and other regulations and legal requirements - including those of the country in which the machine will be operated and all valid environmental-protection regulations. Regionally applicable regulations of the social insurance society for occupational accidents or other supervisory organisations are to be strictly adhered to!

1.02 General notes on safety

- This machine may only be operated by adequately trained operators and only after the instruction manual has been completely read and understood !
- The danger and safety instructions on the machine itself are to be followed!
- The machine may only be used for the purpose for which it was intended and must not be operated without its safety devices. Observe all relevant safety regulations!
- When replacing the feed rollers or the hot wedge, when leaving the workplace unattended and during servicing or repairs, the machine must be switched off at the mains switch and the plug pulled!
- Daily servicing work may be carried out only by appropriately trained personnel!
- Repairs and special maintenance work may be carried out only by technicians or persons with appropriate training!
- Work on the electrical equipment may be carried out only by qualified electricians!
- Work is not permitted on live parts and equipment! Exceptions to this are contained in the regulations EN 50110.
- Modifications and alterations to the machine may only be carried out under observance of all the relevant safety regulations!
- Only spare parts which have been approved by us are to be used for repairs! We expressly point out that any replacement parts or accessories not supplied by us have not been tested and approved by us. The installation and/or use of any such products can lead to negative changes in the structural characteristics of the machine. We shall not be liable for any damage which may be caused by non-original parts.

1.03 Safety symbols



Danger!
Special points to observe.



Danger of hands being crushed!



Danger of burns from hot surface!



Danger from electric voltage!



Danger of injury for operating and specialist personnel!

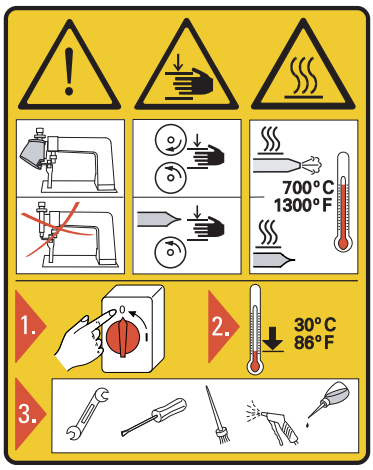

Caution

Do not operate without finger guard and safety devices. Turn off the main switch and let the machine cool down before any setting up, maintenance or cleaning work!

1.04 Important points for the user

- This instruction manual is a component part of the machine and must be available to operating personnel at all times.
  The instruction manual must be read before commissioning the machine.
- The operating and technical personnel are to be instructed as to the machine's safety mechanisms and with regard to safe working methods.
- It is the duty of the owner to operate the machine only when it is in perfect running order.
- The owner is obliged to ensure that none of the safety mechanisms are removed from the machine or deactivated.
- When processing PVC, PTFE and similar materials, the user must ensure that the maximum permissible level of toxic fumes is not exceeded.
- The user must make sure there is no high-frequency welding equipment being operated in direct proximity to the machine that exceeds the EMC limit values according to EN 60204-31 for the machine.

For further information please refer to the sales agency responsible.

1.05 Operating and specialist personnel

1.05.01 Operating personnel

Operating personnel are persons responsible for the setting-up, operating and cleaning of the machine as well as for dealing with faults arising in the sewing area.

The operating personnel is obliged to observe the following points and must:

- Always observe the Notes on Safety in the Instruction Manual!
- Never use any working methods which could impair safe work on the machine!
- Not wear loose-fitting clothing or jewellery such as chains or rings!
- Help to ensure that only authorised persons have access to the potentially dangerous area around the machine!
- Always immediately report to the person responsible any changes in the machine which may limit its safe use!

1.05.02 Specialist personnel

Specialist personnel are persons with special training in the fields of electrics, electronics and mechanics. They are responsible for the lubrication, maintenance, repair and adjustment of the machine.

The specialist personnel is obliged to observe the following points and must:

- Always observe the Notes on Safety in the Instruction Manual!
- Switch off the main switch before carrying out adjustments or repairs and ensure that it cannot be switched on again unintentionally!
- Never work on parts or devices which are still connected to the power supply! Exceptions are listed in the regulations EN 50110.
- Replace the protective covers after all repairs or maintenance work!

1.06 Danger warning

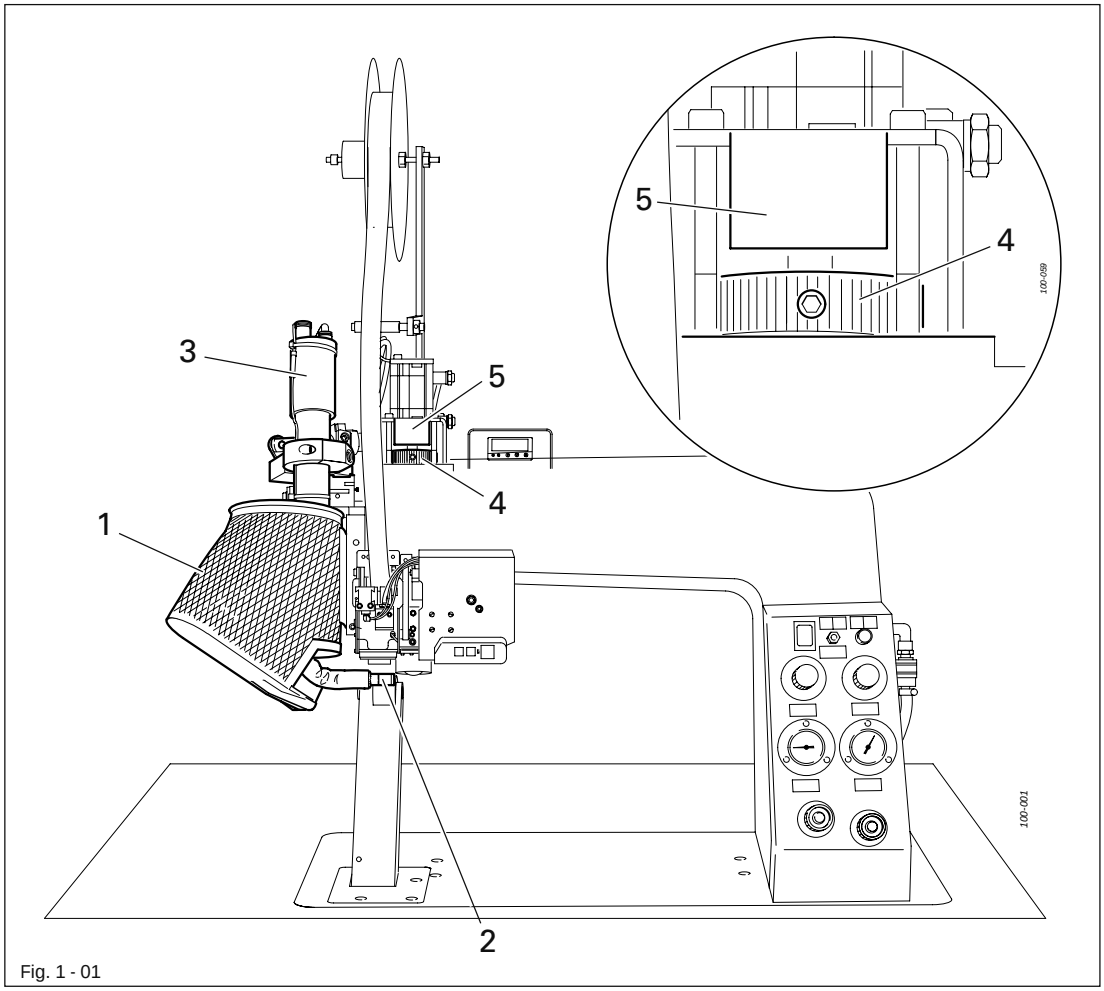

Fig. 1 - 01

Do not operate the machine without protective cover 1!
Danger of burns if hot air nozzle 2 is touched when disengaged!

Do not place hands in the swivel range of hot air nozzle 2 and swivel unit 3!
Danger of crushing during engaging and disengaging motions!

Do not place hands between adjustment wheel 4 and protective cover 5!
Danger of crushing when the feed roller is raised!

2 Proper use

The PFAFF 8303-040 is a hot-air sealing machine with front off-set post and 25 mm wide feed rollers.
The PFAFF 8303-041 is a hot-air sealing machine with front off-set post and 28 mm wide feed rollers.
The PFAFF 8303-042 is a hot-air sealing machine with rear off-set post and 25 mm wide feed rollers.

The purpose of the machines is to heat-seal seams on waterproof and breathable membrane sheeting of all types, using a heat-sealing tape.



Any and all uses of this machine which have not been approved of by the manufacturer are considered to be inappropriate! The manufacturer cannot be held liable for any damage caused by inappropriate use of the machine! Appropriate use of the machine presupposes the observance of all operational, adjustment, maintenance and repair measures required by the manufacturer!

3 Specifications ▲

Dimensions and weight:
Length: ..... ca. 1240 mm
Width: ..... ca. 600 mm
Height: ..... ca. 1730 mm

Weight: ..... ca. 62 kg

Mains voltage set for: ..... 230 V ± 10%, 50/60 Hz, 1 phase

Power consumption: ..... ca. 3300 W
Heating capacity: ..... 3000 W
Fuse protection: ..... 2 x 16A, inert

Operating air pressure ..... 6 bar
Air consumption ..... 60 – 120 l/min.

Sealing temperature: ..... 20ºC to ca. 650ºC, infinitely variable
Sealing tape width: ..... up to 26 mm
Sealing speed: ..... 1 – 10 m/min.

Noise data:
Noise emission level at workplace: ..... < 70 dB(A)■
(Noise measurement in accordance with DIN 45 635-48)

▲ Subject to alteration

■ K_{pA} = 2,5 dB

4 Disposal of the machine

- The proper disposal of the machine is the responsibility of the customer.
- The materials used on the machine are steel, aluminium, brass and various plastics. The electrical equipment consists of plastics and copper.
- The machine is to be disposed of in accordance with the locally valid environmental protection regulations.



Special care is to be taken that parts soiled with lubricants are disposed of separately in accordance with the locally valid environmental protection regulations.

5 Transport, packing and storage

5.01 Transport to the customer's premises

The machines are delivered completely packed.

5.02 Transport within the customer's premises

The manufacturer bears no liability for transport within the customer's premises.

5.03 Disposal of packing

The packing of this machine consists of paper, cardboard, fusible fabric and wood. Proper disposal of the packing is the responsibility of the customer.

5.04 Storage

If not in use, the machine can be stored for up to six months as it is. During this time it should be protected against dust and dampness.
If the machine is stored for longer periods, its parts, especially moving parts, must be protected against corrosion, e.g. by a film of oil.

6 Explanation of the symbols

In this Instruction Manual, tasks to be carried out and important information are drawn to your attention by symbols. The symbols have the following meanings:



Note, information



Cleaning, care



Lubrication

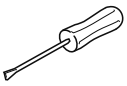

Servicing, repairing, adjustment, maintenance
(only to be carried out by specialist personnel)

7 Controls

7.01 Summary of the controls

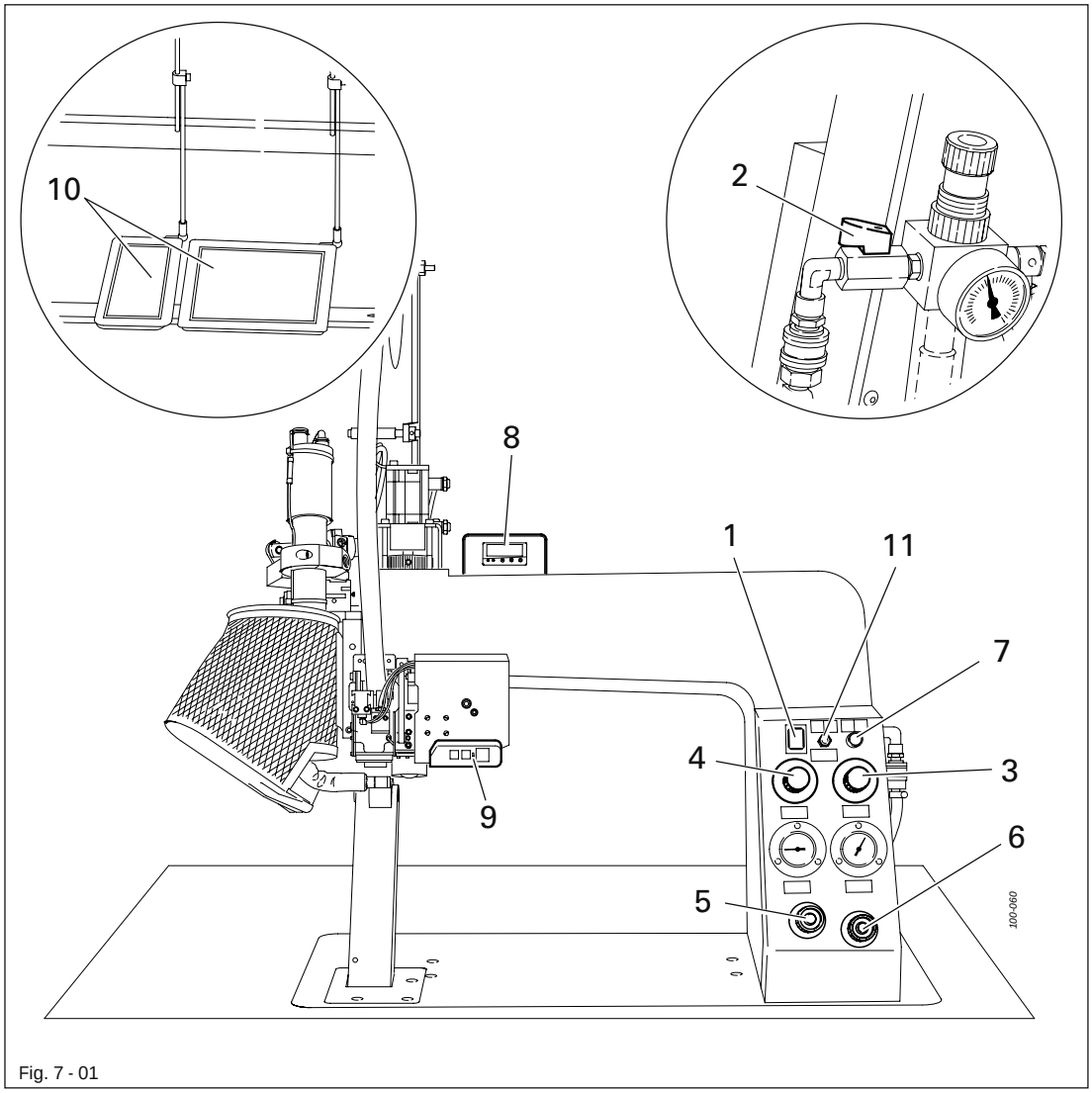

Fig. 7 - 01

1 Main switch, see Chapter 7.02

2 Air cut-off valve, see Chapter 7.03

3 Regulator for sealing tape feed motion, see Chapter 7.04

4 Regulator for sealing speed, see Chapter 7.04

5 Regulator for the hot air pressure, see Chapter 7.05

6 Regulator for the feed roller pressure, see Chapter 7.05

7 Sealing tape feed key, see Chapter 7.06

8 Sealing temperature control panel, see Chapter 7.07

9 Machine head keys, see Chapter 7.08

10 Pedals, see Chapter 7.08

11 Potentiometer for the hot air nozzle swivel function, see Chapter 7.09

7.02 Main switch

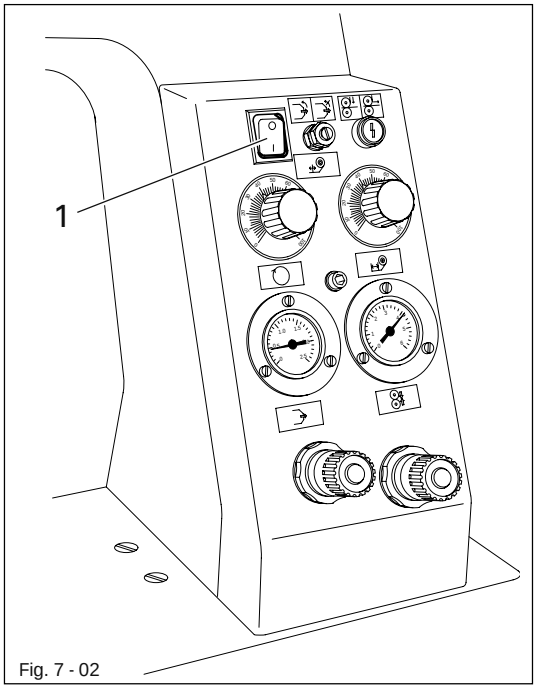

Fig. 7 - 02

- The machine is switched on or off by pressing main switch 1.

Position "0" : Machine is switched off
Position "1" : Machine is switched on



When switching the machine on or off, please observe the notes in Chapter 8.03 Switching the machine on and off!

7.03 Air shut-off valve

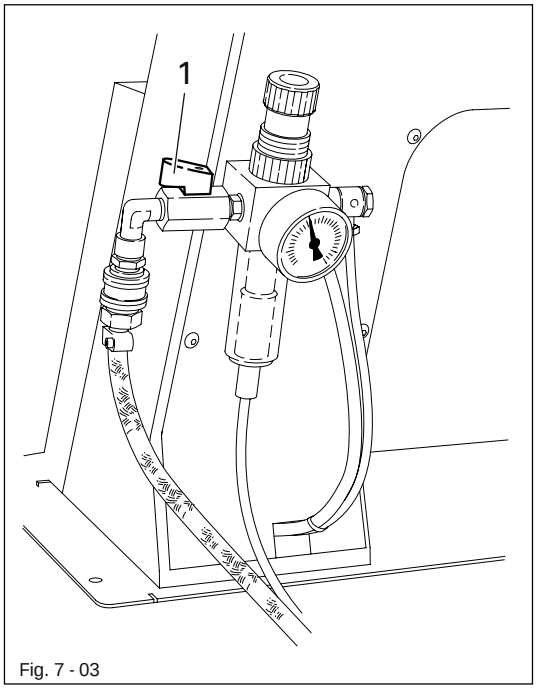

Fig. 7 - 03

- By turning air shut-off valve 1, the compressed air supply is shut off or opened.



Before shutting off the air supply, please observe the notes in Chapter 8.03 Switching the machine on and off !

7.04 Regulator for the sealing tape feed motion and sealing speed

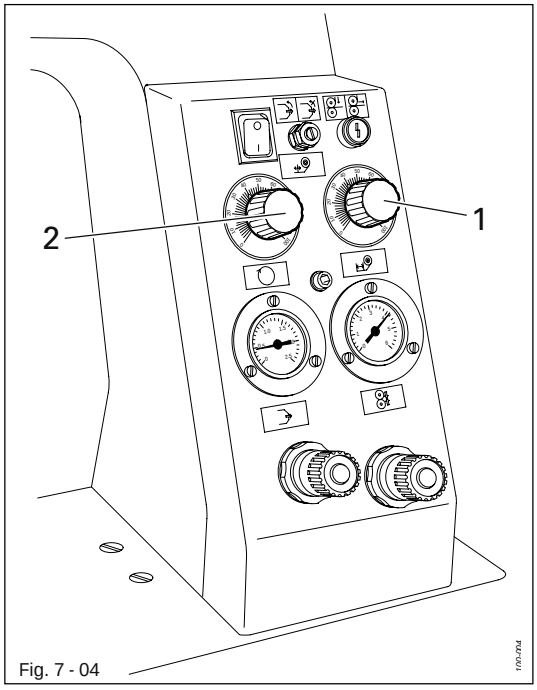

Fig. 7 - 04

- The sealing tape feed motion is set with regulator 1.
- The sealing speed is set with regulator 2.

7.05 Regulator for the hot air pressure and the feed roller pressure

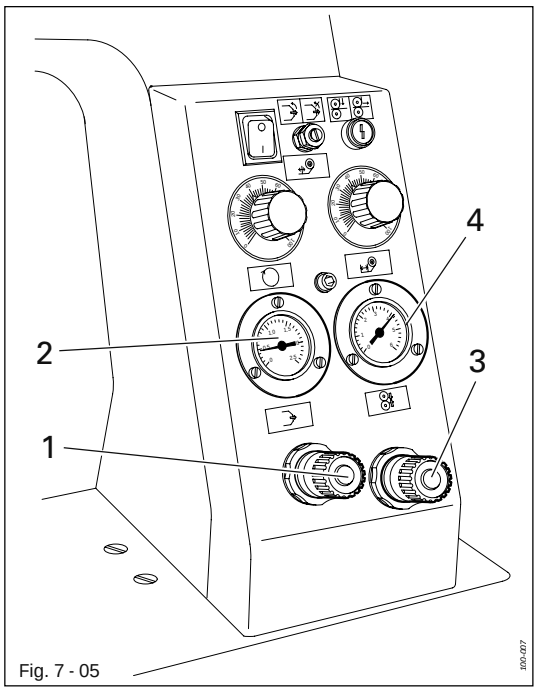

Fig. 7 - 05

- The hot air pressure is set by pulling out and turning regulator 1.
- The hot air pressure level can be read on gauge 2.
- The feed roller pressure is set by pulling out and turning regulator 3.
- The feed roller pressure level can be read on gauge 4.

7.06 Sealing tape feed key

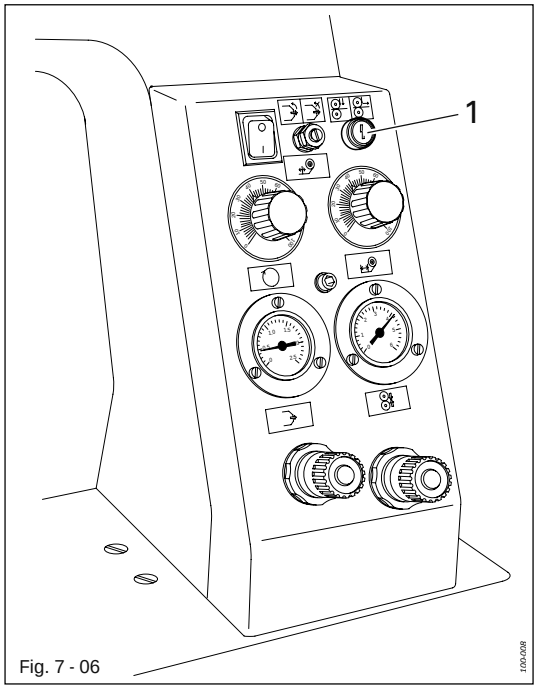

Fig. 7 - 06

- The sealing tape feed function (e.g. for threading the sealing tape) is switched on by pressing key 1.

To set off the function, the top feed roller must be raised by selecting the appropriate mode or by using the pedal function, see Chapter 7.08 Machine head keys and pedals.

7.07 Sealing temperature control panel

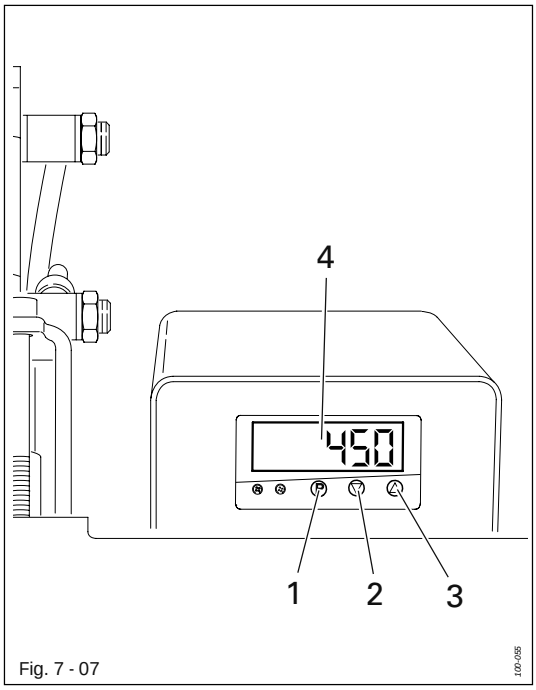

Fig. 7 - 07

- By pressing key 1 twice, the sealing temperature can be reduced with key 2 or increased with key 3 (the letters "SP" appear in front of the temperature on the display)

During adjustment the set temperature is shown and changed in display 4. After adjustment the actual temperature of the hot air nozzle appears again on the display automatically.

7.08 Machine head keys and pedals

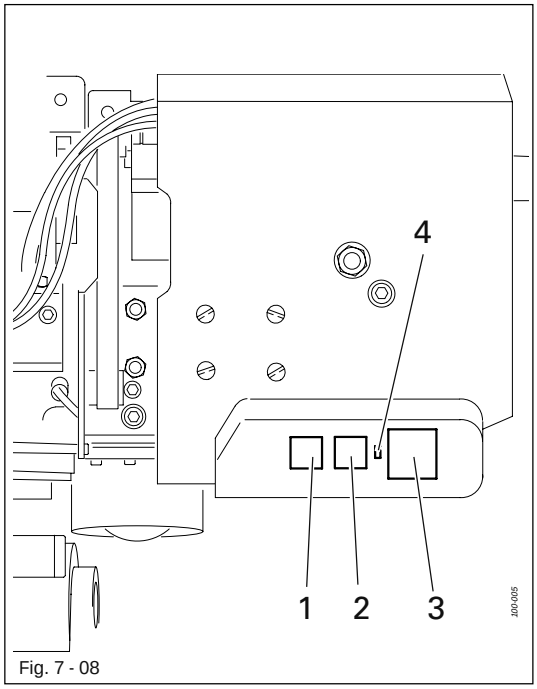

Fig. 7 - 08

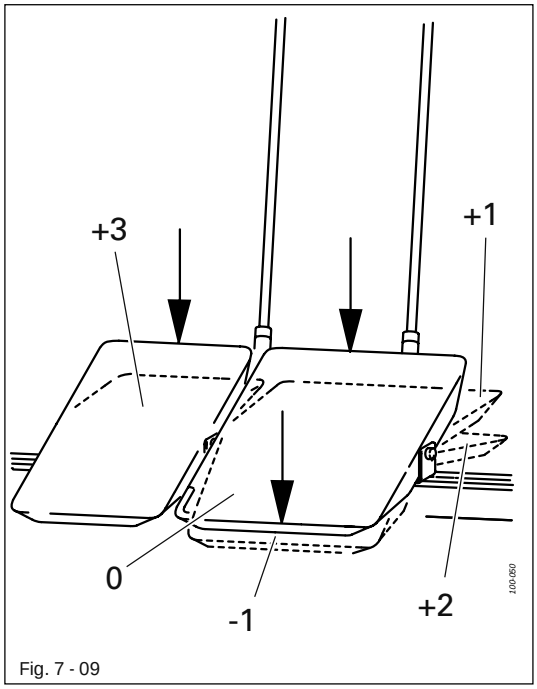

Fig. 7 - 09

After the machine has been switched on, the top feed roller must be lowered with the pedal setting "+1", before the functions of keys 1 and 3 can be selected.

- By pressing key 1 the "press" function is switched on or off. When the function is switched on, diode 4 flashes slowly. This function is used for the subsequent bonding of the sealing seam without the application of a new sealing tape.
- If key 2 is pressed a choice is made between the "feed roller raised" (diode 4 is on) and "feed roller lowered" (diode 4 is off) modes.
- If key 3 is pressed, the "feed roller in reverse" mode is switched on or off. If a fault occurs, diode 4 flashes quickly.

Summary of the pedal functions

Pedal setting	Key 1 on, (diode 4 flashes slowly)	Key 2 on, (diode 4 is on)	Key 2 is off, (diode 4 is off)	Key 3 on, (diode 4 is off)
"-1"	Feed roller raised	Feed roller raised	Feed roller raised	Feed rollers turn in reverse
"0"	Feed roller raised or lowered	Feed roller raised	Feed roller lowered	-
"+1"	Feed roller lowered	Feed roller lowered	-	-
"+2"	Feed rollers start	Sealing starts	Sealing starts	-
"+3"	Engage heating nozzle	Cut sealing tape	Cut sealing tape	-

7.09 Potentiometer for the hot air nozzle swivel function

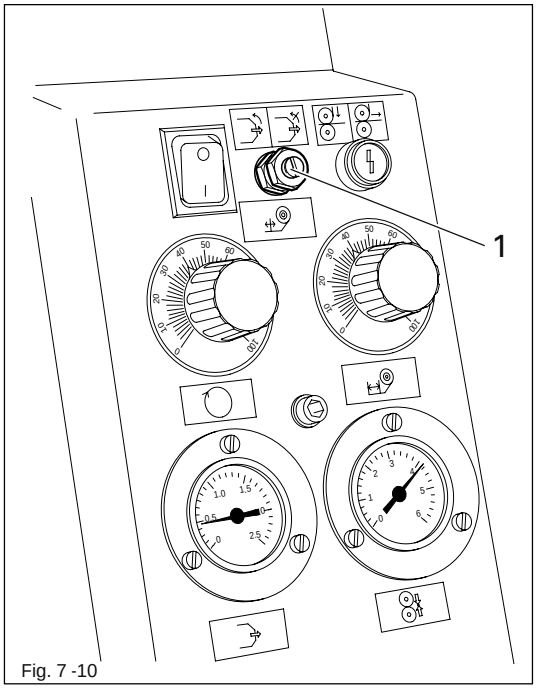

Fig. 7 -10

- Set the swivel function of the hot air nozzle by turning screw 1.

Turn to the left
The hot air nozzle disengages simultaneously with the selection of the "cut sealing tape" function.

Turn to the right
The hot air nozzle does not disengage until the pedal is released after the sealing tape has been cut.

Centre position
By turning the key to the right or left, the time delay between cutting the sealing tape and disengaging the hot air nozzle can be set.

8 Installation and commissioning

The machine must only be installed and commissioned by qualified personnel!
All relevant safety regulations must be observed!.

8.01 Installation

Suitable connections for power and compressed air, an even and firm floor surface and sufficient lighting must be provided for at the installation site.

8.01.01 Adjusting the table height

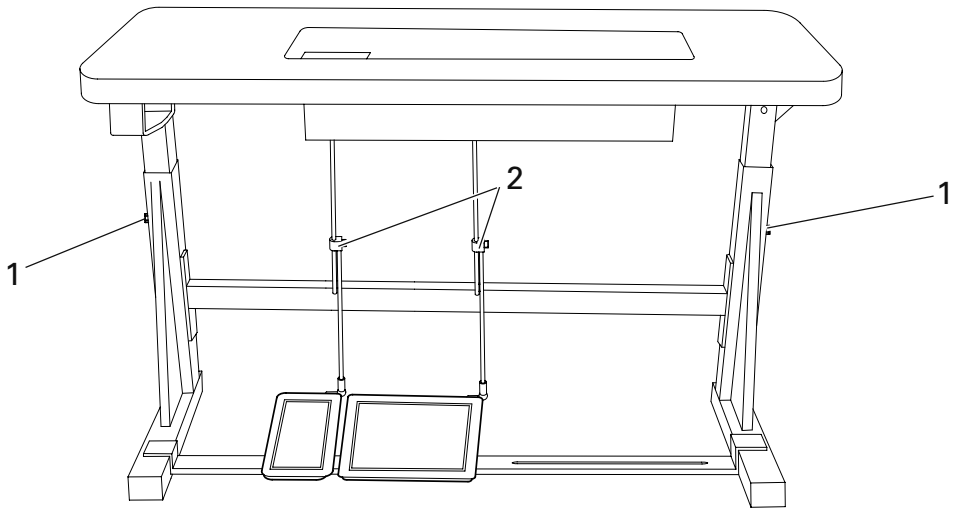

Fig. 8 - 01

- Loosen screws 1 and 2 and set the table at the required height.
- Tighten screws 1 firmly.
- Set the pedals as required and tighten screws 2.

8.01.02 Fitting the sealing tape reel holder

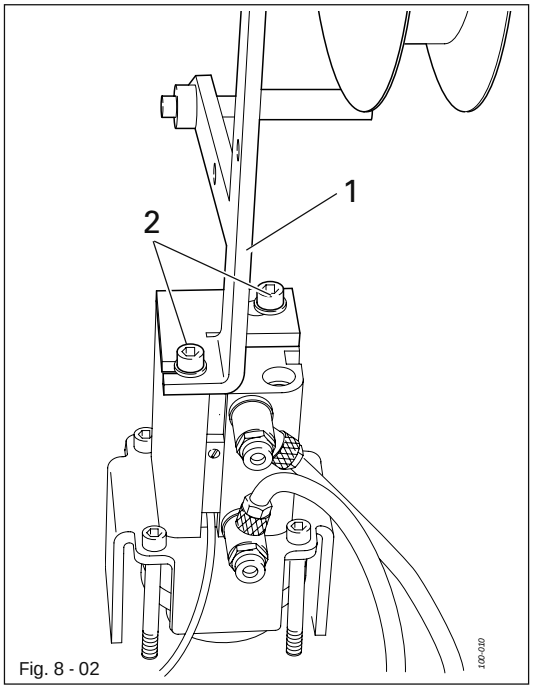

Fig. 8 - 02

- Fasten sealing tape reel holder 1 with screws 2.

8.01.03 Lampe anschließen

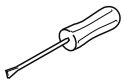

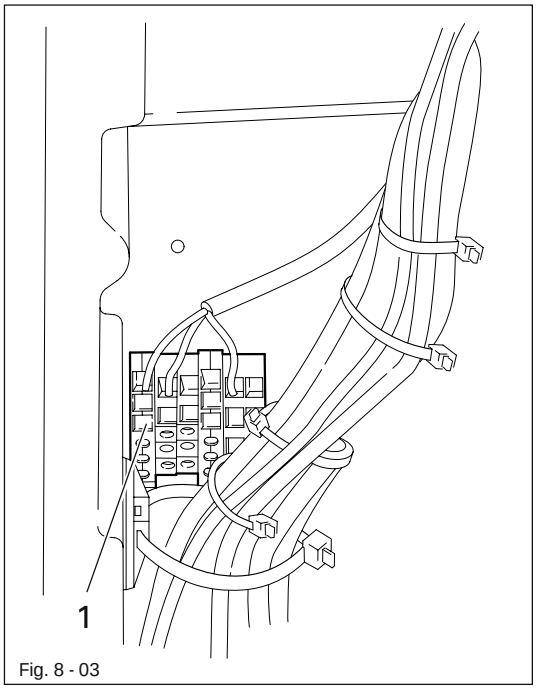

Fig. 8 - 03



Disconnect the mains plug!



Danger from electric voltage!



The lamp must be connected by qualified personnel only!

- Remove the cover on the rear of the machine.
- A lamp can be connected to the machine's power supply at terminal 1.
- Replace the cover on the rear of the machine.

8.01.04 Connecting the pedals and the power supply

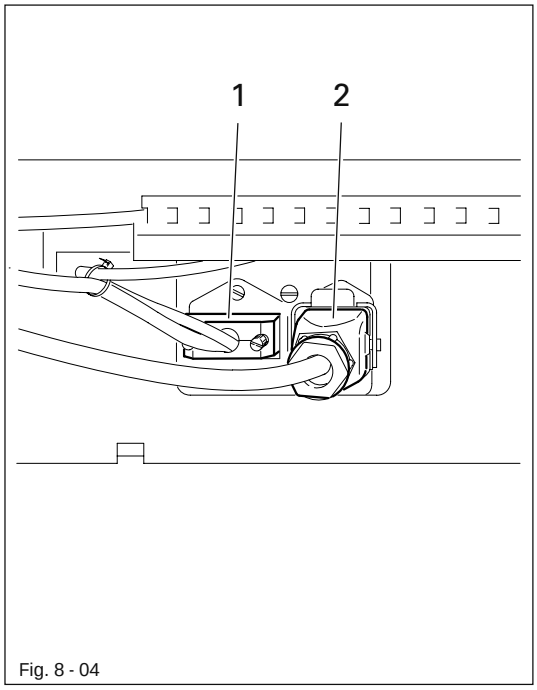

Fig. 8 - 04

- Insert plug 1 (pedals) and 2 (power supply) below the table top at the rear of the machine.

8.02 Commissioning

The machine must only be commissioned by qualified personnel. All relevant safety regulations must be observed.

- Check the machine, especially the electric leads, for any damage.
- Clean the machine thoroughly, also see Chapter 11 Care and maintenance.
- Connect the machine to the electricity supply and have specialists check, whether the machine can be operated with the available mains voltage and whether it is connected properly.

If there are any deviations, do not operate the machine under any circumstances.

The machine may only be connected to an earthed socket!

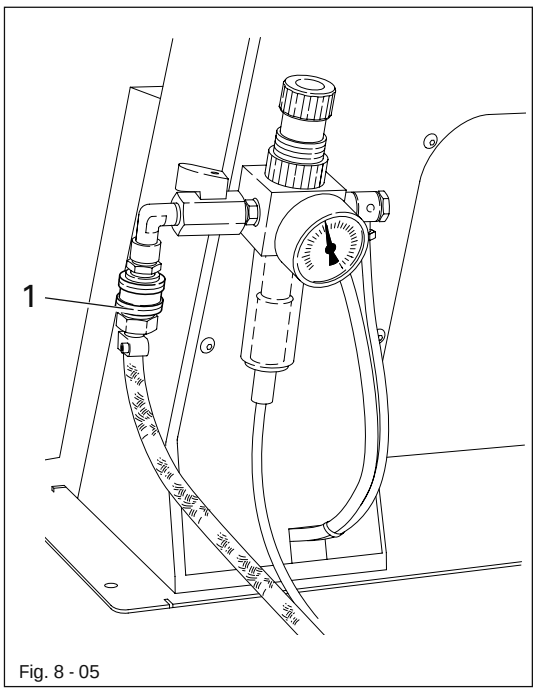

Fig. 8 - 05

- Attach the compressed air tube to coupling 1. The gauge should display a pressure of 6 bar. If this is not the case, adjust it to this level, see Chapter 11.02 Checking / adjusting the air pressure.

The air must be completely free of oil and dry. The compressed air quality influences the service life of the heating cartridge in the air heater. If the air is very damp, a compressed air low-temperature drier with preliminary filter and secondary microfilter must be installed in front of the sealing machine.

8.03 Switching the machine on / off

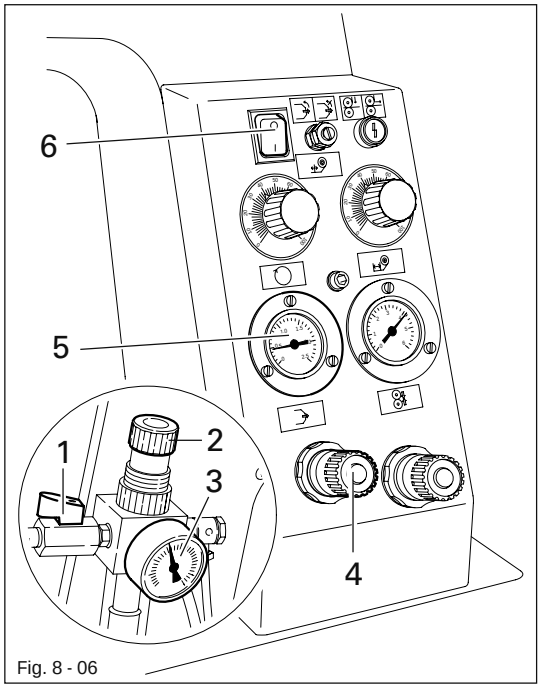

Fig. 8 - 06

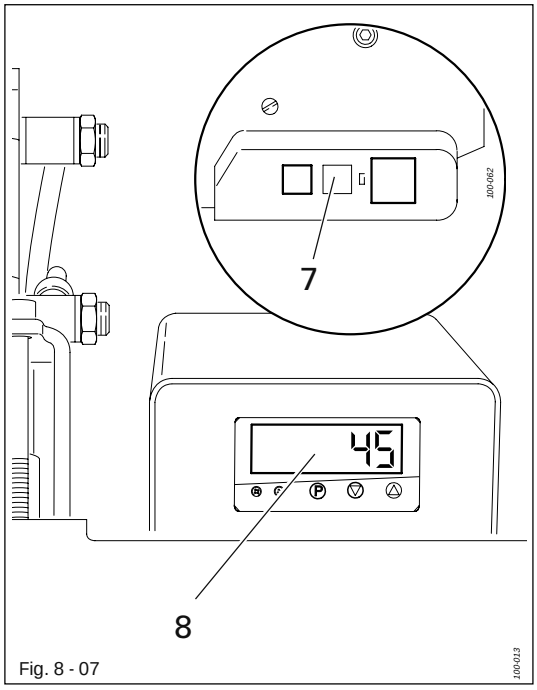

Fig. 8 - 07

Work steps for switching on the machine:

- Turn on the air tap 1.
- Pull up regulator 2 and turn it until an air pressure of 6 bar is displayed on gauge 3.
- Pull out regulator 4 and turn it until the hot air pressure on gauge 5 is at least 0.3 bar.
- Turn the main switch 6 to position "I".

The hot air pressure must not fall below 0.2 bar!
If the hot air pressure is too low, there is a risk of the heating element fusing. For this reason the heating is switched off automatically if the hot air pressure is too low.

The machine functions, such as e.g. tape threading etc., are not activated until the large pedal has been operated (pedal setting "+1").

Work steps for switching off the machine:

- Press keys 7 and at the same time bring the large pedal into position "-1". The sealing temperature is reduced.
- Wait until the value shown on display 8 sinks below 50°C.
- Turn off air tap 1.
- Turn the main switch 6 to position "0".

Before turning off the compressed air at air tap 1, wait until the sealing temperature has sunk below 50°C ! If this point is not observed, the heating element can fuse!

9 Setting up

All setting up work may only be carried out by appropriately trained personnel! Unless stated otherwise, the machine must be switched off for all setting up work!

9.01 Inserting the sealing tape

9.01.01 Adapting the sealing tape reel holder to the sealing tape reel

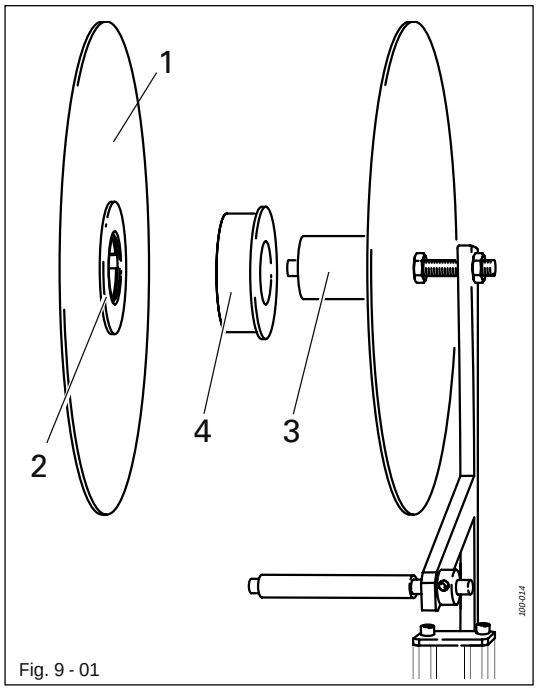

Fig. 9 - 01

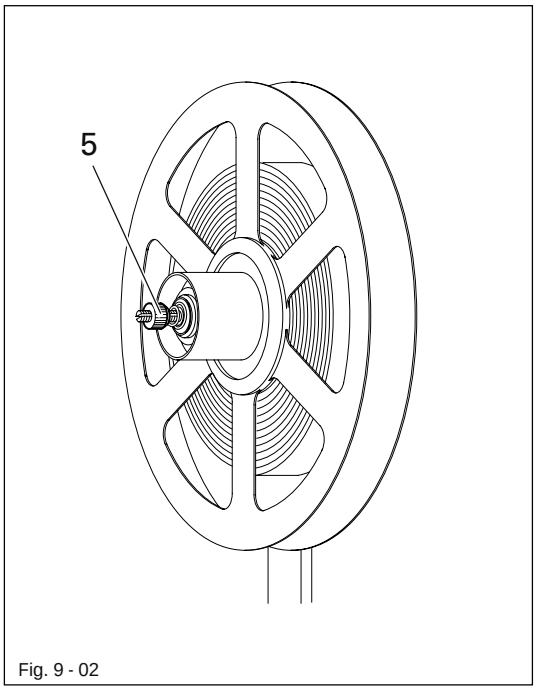

Fig. 9 - 02

- The sealing tape real holder must be adapted to the inner diameter of the sealing tape reel:
  For small inner diameters turn the front disk 1, so that the small disk 2 is positioned opposite holder 3. The sealing tape reel can be fitted to the holder directly.
- For large inner diameters turn the front disk 1, so that the large disk 2 is positioned opposite holder 3. Slide fitting 4 onto holder 3 and push the sealing tape reel onto it.

When the sealing tape unwinds it should not touch the inner wall of the sealing tape reel holder.

9.01.02 Adjusting the sealing tape brake

- Adjust the sealing tape brake with nut 5 so that the sealing tape reel cannot continue moving, but the sealing tape can be drawn off rapidly.

9.01.03 Inserting the sealing tape / adjusting the sealing tape width

Requirement
The sealing tape should run in the centre of the feed rollers and be guided in a narrow channel but still run easily through the guide.

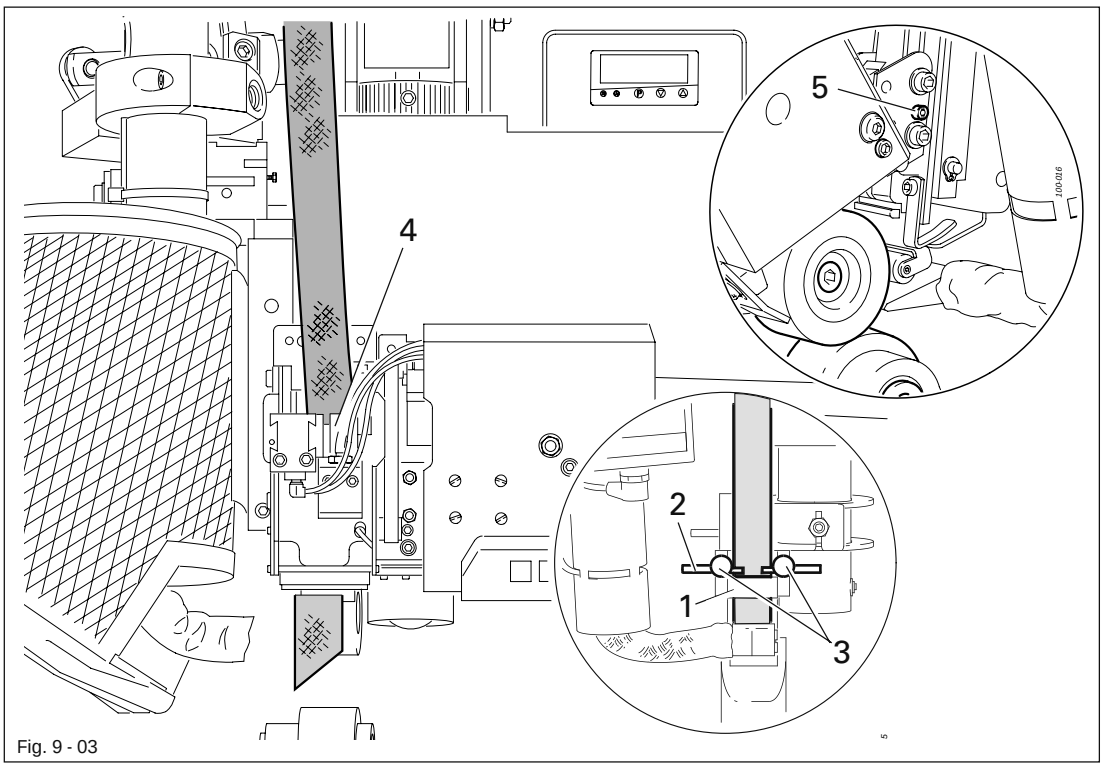

Fig. 9 - 03



Switch off the machine and let it cool down!
Danger of burns on contact with the hot air nozzle!

Machines without sealing tape trimmer

- Cut the sealing tape at a slant for easier insertion.
- Insert the sealing tape into guide 1 and pull it through up to the feed rollers.
- Adjust guide pins 2 (screws 3) in accordance with the requirement.

Machines with sealing tape trimmer

- Cut the sealing tape at a slant and insert it as far as possible into guide 4.
- Switch on the machine and operate the sealing tape feed key, until the sealing tape becomes visible, see Chapter 7.06 Sealing tape feed key.
- Trigger off a cutting operation, see Chapter 7.08 Machine head keys and pedals.
- Remove the protective cover and adjust the guide with screw 5 in accordance with the requirement.
- Switch off the machine and attach the protective cover.



If the sealing tape is pulled in at a crooked angle or if it gets caught in the sealing tape trimmer, switch off the machine and draw the sealing tape through with tweezers.
Danger of injury when the machine is switched on!

9.02 Adjusting the penetration depth

The feed roller clearance depends on the thickness of the material to be sealed. The clearance is adjusted correctly, when one ply of the workpiece fits just between the feed rollers when the top feed roller is lowered.

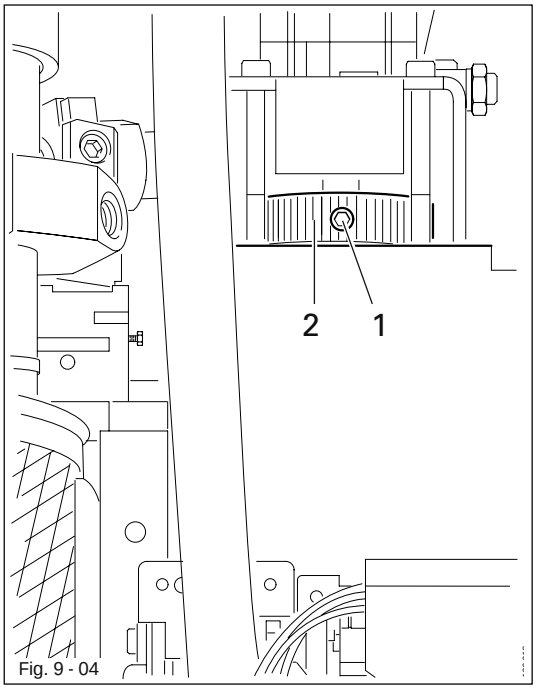

Fig. 9 - 04

- Loosen accessible screws 1.
- Adjust the feed roller clearance with adjustment ring 2.
- Tighten accessible screws 1.

If the feed roller pressure is reduced, it is easier to adjust the adjustment ring 2, see Chapter 7.05 Regulator for the hot air pressure and the feed roller pressure.

Do not place hands between adjustment wheel 4 and protective cover 5! Danger of crushing when the feed roller is raised!

9.03 Adjusting the sealing tape feed stroke

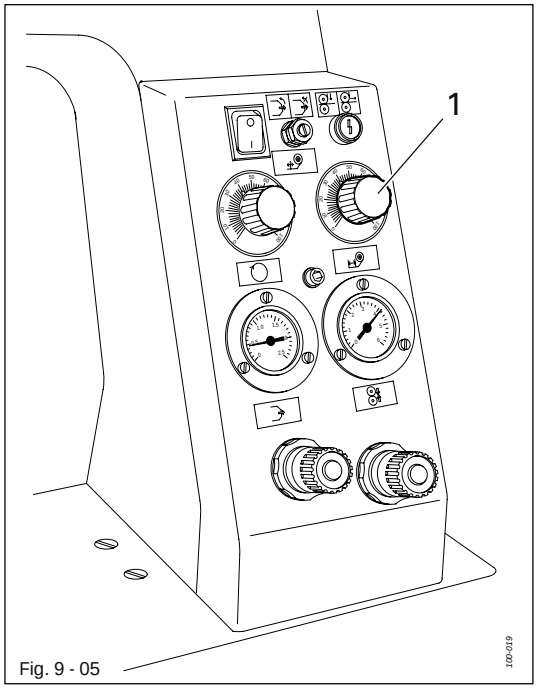

Fig. 9 - 05

- With regulator 1 it is possible to adjust the sealing tape so that a reliable beginning of the sealing seam is guaranteed.

9.04 Adjusting the swivel function of the hot air nozzle

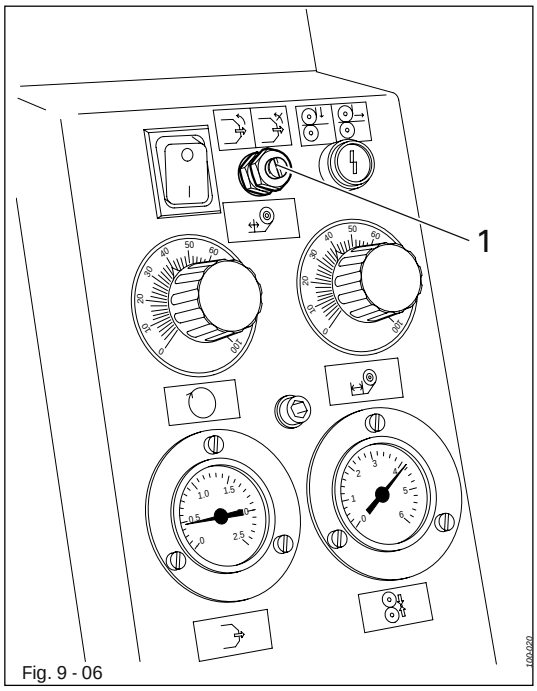

Fig. 9 - 06

- Adjust the swivel function of the hot air nozzle with screw 1, see Chapter 7.09 Potentiometer for the hot air nozzle swivel function.

9.05 Adjusting the hot air pressure and the feed roller pressure

To change the feed roller and hot air pressure, first of all lower the appropriate pressure to below the required level and then raise it to the required level. The optimum settings for the hot air and feed roller pressure depend on the material and must be established with test seams.

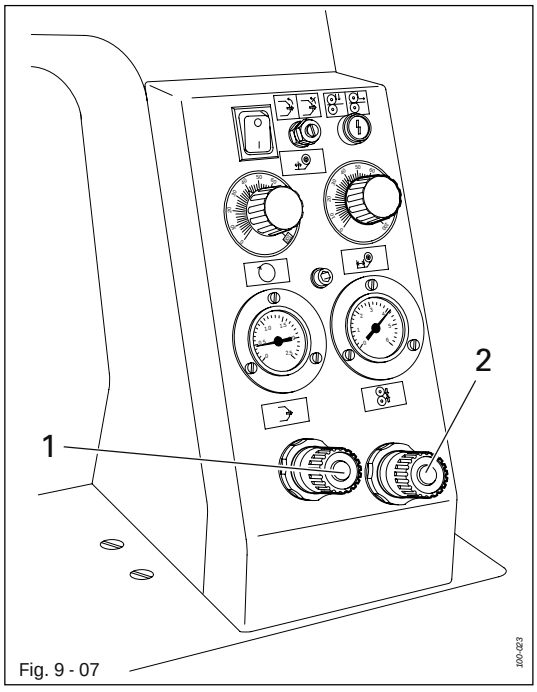

Fig. 9 - 07

- Switch on the machine, see Chapter 8.03 Switching the machine on/off.
- Set the sealing temperature at "0", see Chapter 7.07 Sealing temperature control panel.
- Set the hot air pressure (min. 0.2 bar!) with regulator 1, see Chapter 7.05 Regulator for the hot air pressure and the feed roller pressure.
- Set the feed roller pressure (max. 6 bar) with regulator 2, see Chapter 7.05 Regulator for the hot air pressure and the feed roller pressure.

9.06 Adjusting the sealing temperature and the sealing speed

All machine settings are always dependent on the workpiece. The optimum settings for sealing temperature and sealing speed can established by sewing a test seam.

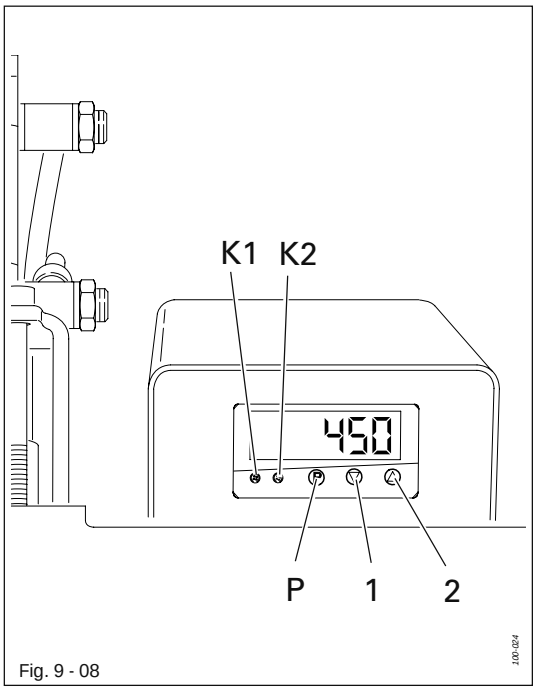

Fig. 9 - 08

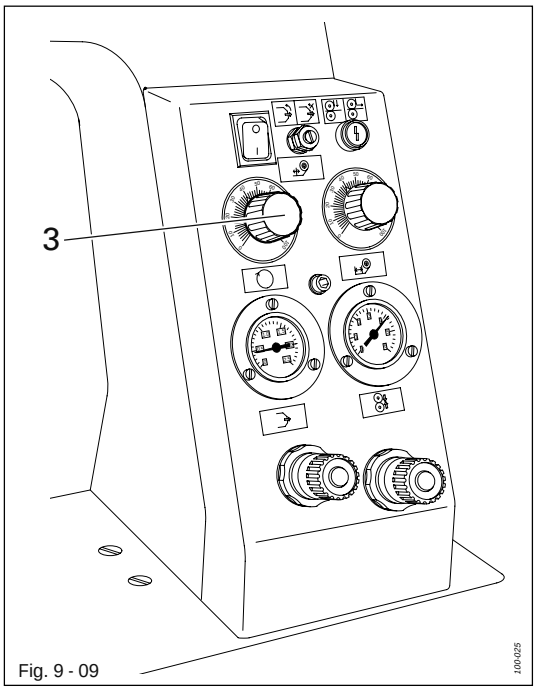

Fig. 9 - 09

- Switch on the machine, see Chapter 8.03 Switching the machine on/off.
- Press the P key twice (the letters "SP" appear in front of the temperature display).
- Reduce the sealing temperature by pressing key 1, or increase it (max. 650 ºC) by pressing key 2.
  During the adjustment, the desired sealing temperature level is displayed, shortly after the adjustment the actual temperature of the hot air nozzle automatically appears on the display again.

The LED K2 lights up, when energy is being supplied to the hot air nozzle.

- Adjust the sealing speed by turning regulator 3 (min. 1 m/min).

10 Heat sealing



The machine must only be operated by appropriately trained personnel! The operating staff must also make sure that only authorized persons are in the danger area of the machine!

10.01 Heat-sealing principle

In order to achieve optimum heat-sealing, certain conditions concerning the workpiece and the machine settings have to be fulfilled.

The heat-sealing tape must be:

- heat-sealable
- be suitable for use on the machine with regard to thickness and properties

In the seam area the material to be heat-sealed must be clean and free from parting agents such as e.g. oil or silicone.

The basic requirements on the heat-sealing machine are:

- the correct working temperature,
- the correct setting of the hot-air pressure,
- correct selection of the feed rollers,
- optimum pressure of the feed rollers on the workpiece,
- correct distance between the feed rollers and
- correct sealing speed.



All settings of this machine are always dependent on the type of material being heat-sealed.

Errors which may occur during heat-sealing:

● Hot-air temperature too high:	heat-sealing tape and workpiece (membrane) can burn.
● Hot air temperature too low:	Complete sealing of the sewn seam is not possible. Fusing temperature for sealing tape not reached.
● Sealing tape not completely bonded:	The seam sewn is not properly sealed. (Check the symmetrical and parallel alignment of the feed rollers, hot air nozzle and sealing tape with each other).

10.02 Carrying out a sealing operation

The machine must have been mounted and checked in accordance with Chapter 8 Mounting and Commissioning.

- Adjust the machine to the materials being used, see Chapter 9 Setting up.

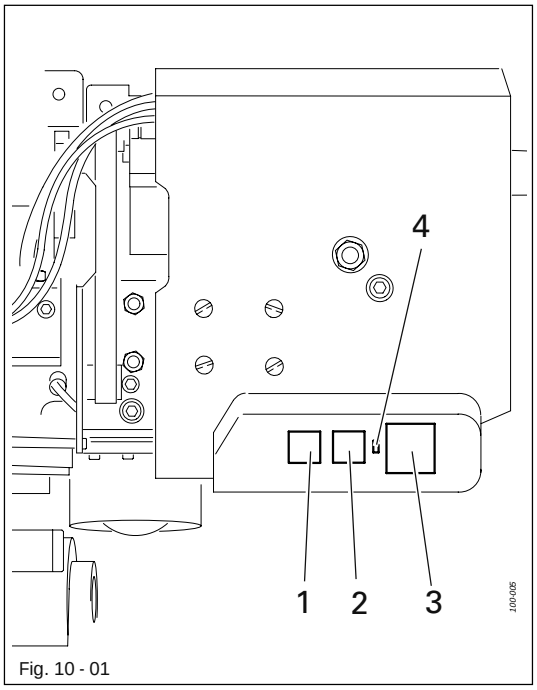

Fig. 10 - 01

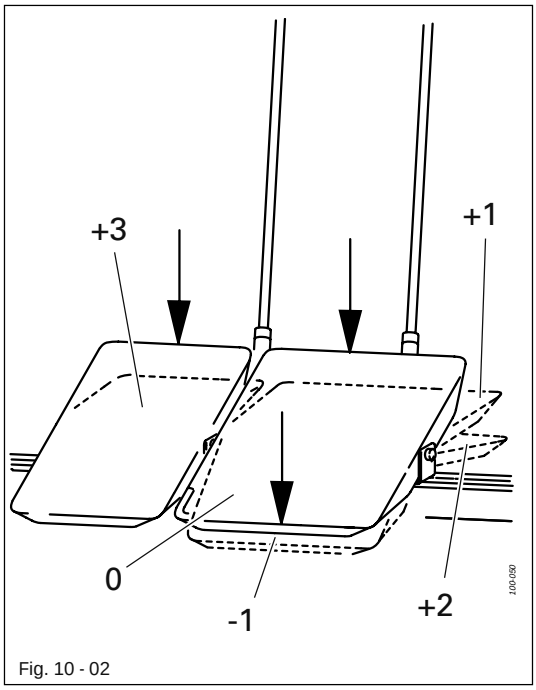

Fig. 10 - 02

Depending on the pre-selection made with keys 1 to 3, different operating sequences, listed below, apply for the sealing operation, see Chapter 7.08 Keys on the machine head and pedals.

"Pressing" function

This function is used for the subsequent bonding of a sealed seam without the application of a new sealing tape (the sealing tape feed function is switched off). When this function is switched on, diode 4 flashes slowly.

- Lower the feed roller with pedal setting "+1" (only after the machine has been switched on).
- Switch on the "press" function with key 1.
  The sealing tape is cut and not fed.
- Place the material to be pressed between the feed rollers.
- Fix the material with pedal setting "+1" – lower the feed roller.
- Start the feed rollers with pedal setting "+2". The feed speed depends on the pedal setting. During the pressing operation the material must be guided by hand.
- If necessary engage the hot air nozzle with pedal setting "+3" – hot pressing. In this case the feed speed corresponds to the set sealing speed.

"Feed roller raised" mode

If this function is switched on, the feed roller is raised when the pedals are in their basic position (pedal setting "0") and diode 4 lights up.

- Lower the feed roller with pedal setting "+1" (only after the machine has been switched on).
- Switch on the "feed roller raised" mode with key 2.
- Place the material to be sealed between the feed rollers.
- Fix the material with pedal setting "+1" – lower the feed roller.
- Start the sealing operation with pedal setting "+2".
  The hot air nozzle is engaged and the transport rollers start with a time delay.
  During the sealing operation the material must be guided by hand.
- To interrupt the sealing operation (e.g. to change the position) switch back to pedal setting "+1".
  The hot air nozzle disengages and the transport rollers move back a short distance.
- Trigger off the sealing tape trimming operation ca. 5 cm before the end of the seam with pedal setting "+3" (only on machines with sealing tape trimmer).



If a sealing seam has to be pressed, key 1 should be pressed shortly before the end of the sealing seam, in order to avoid insertion of the sealing tape before pressing.

"Feed roller lowered" mode

If the "feed roller raised" mode is switched off, the feed roller is lowered when the pedals are in their basic position (pedal setting "0"). Diode 4 is off.

- Raise the feed roller with pedal setting "-1".
- Place the material to be sealed between the feed rollers.
- Fix the material by releasing the pedals (basic position "0") – lower the feed roller.
- Start the sealing operation with pedal setting "+2".
  The hot air nozzle is engaged and the transport rollers start with a time delay.
  During the sealing operation the material must be guided by hand.
- To interrupt the sealing operation (e.g. to change the position) release the pedals (basic postion "0").
  The hot air nozzle disengages and the transport rollers move back a short distance.
- Trigger off the sealing tape trimming operation ca. 5 cm before the end of the seam with pedal setting "+3" (only on machines with sealing tape trimmer).

"Feed rollers in reverse" mode

This mode makes it possible to reverse the feed rollers in order to remove a tangled sealing tape from the feed rollers.

- Raise the feed roller with pedal setting "-1" (only in the "feed roller lowered" mode).In the "feed roller raised" mode, the feed roller is raised with pedal setting "0".
- Switch on the "feed rollers in reverse" mode with key 3.

10.03 Malfunctions

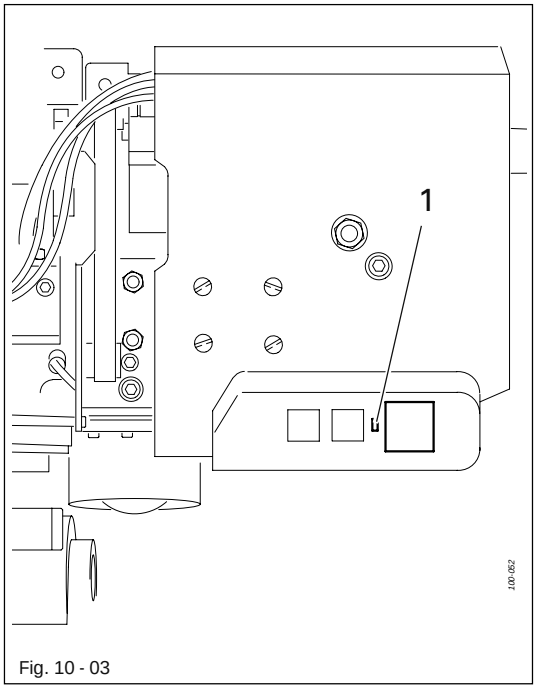

Fig. 10 - 03

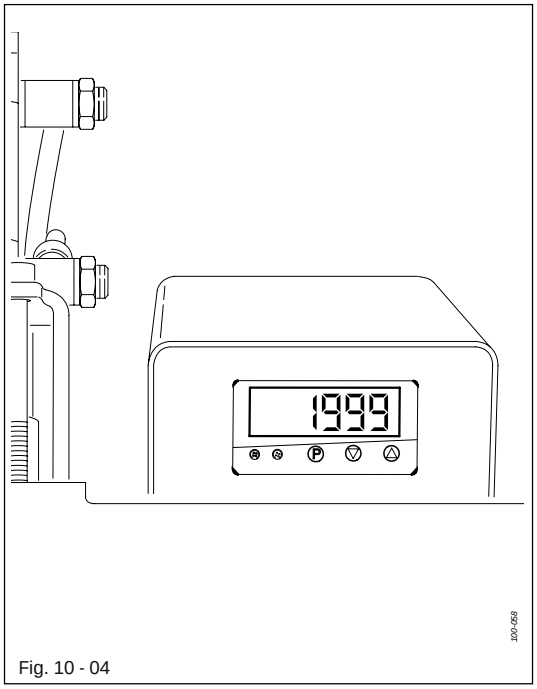

Fig. 10 - 04

If malfunctions occur during the sealing sequence, e.g. if the hot air pressure is too low (< 0.2 bar), diode 1 flashes rapidly.

- Eliminate the cause of the malfunction.
- Acknowledge the malfunction by switching the machine off and then on again.

Error messages on the display

Display	Remedy
1999	Change the temperature sensor, see Chapter 12.08 Changing the temperature sensor.

11 Care and maintenance

Clean hot-air nozzle	as required
Check air pressure	daily, before use
Clean water bowl of air filter/regulator	daily, before use
Change top feed roller	as required
Lubricate drive chains	as required

11.01 Clean hot-air nozzle



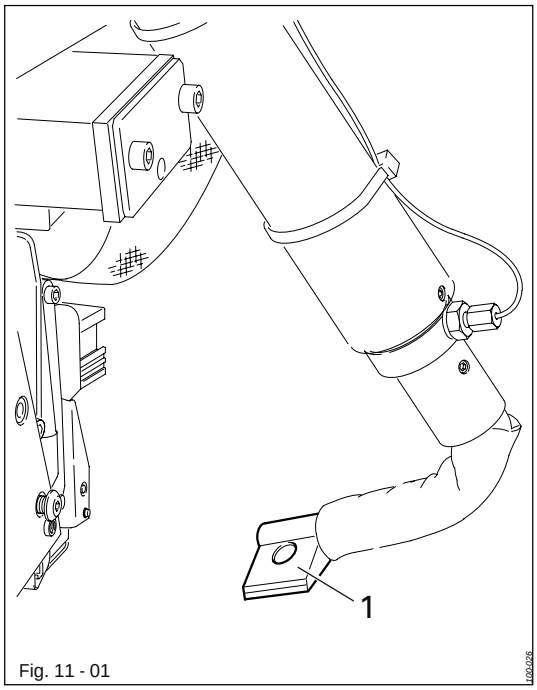

Fig. 11 - 01



Switch the machine off and let it cool down!
Danger of burns if the hot-air nozzle is touched!

- Before each use remove any residues from the air slot of hot-air nozzle 1.

11.02 Checking / adjusting the air pressure

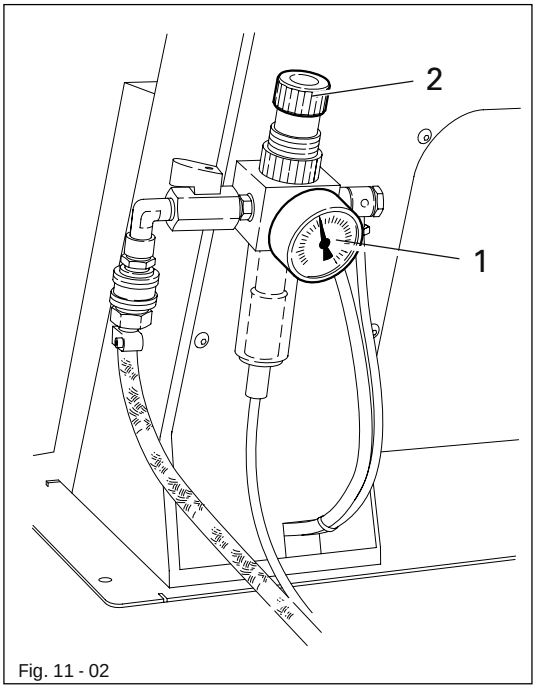

Fig. 11 - 02

- Before each use, check the air pressure on gauge 1.
- The gauge 1 must display a pressure of 6 bar.
- If necessary, alter the pressure to this level.
- To do so, lift button 2 and turn it so that the gauge shows a pressure of 6 bar.

11.03 Emptying the water container of the air filter / cleaning the filter



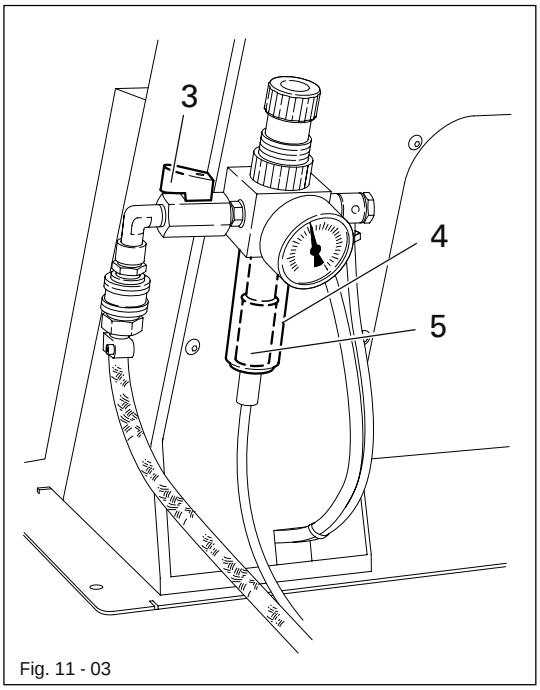

Fig. 11 - 03

Emptying water container 4:

- Switch off the machine, see Chapter 8.03 Switching the machine on / off.
- Water container 4 empties automatically when the air cut-off valve 3 is closed.

Cleaning filter 5:

- Unscrew water container 4.
- Remove filter 5 and clean it with compressed air or isopropyl alcohol (part number 95-665 735-91).
- Screw filter 5 back into place and attach water container 4.

11.04 Lubricating the drive chains

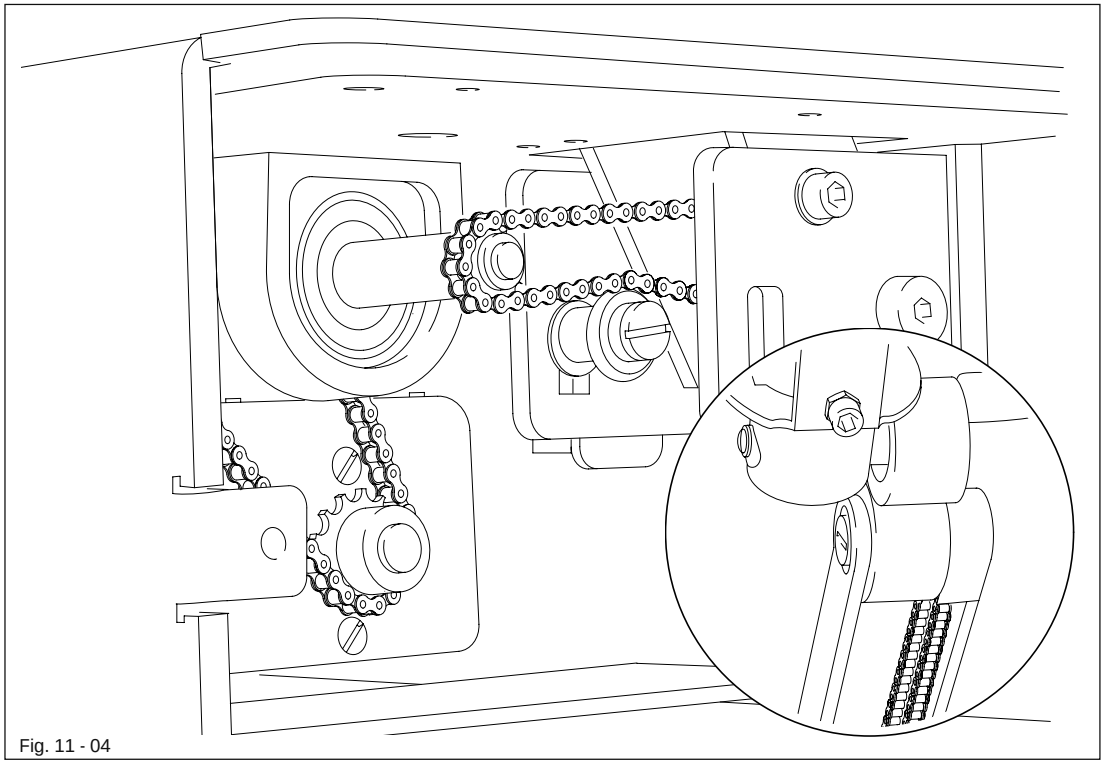

Fig. 11 - 04

- Lubricate all drive chains as required.
- Switch off the machine, see Chapter 8.03 Switching the machine on / off.
- Remove the machine covers and lubricate the accessible chain parts.
- Switch on the machine and let it run a little further.
- Switch off the machine and lubricate the remaining part of the chains.

The intervals for lubrication depend on working conditions (dampness, soiling etc.).

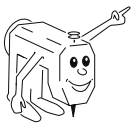

We recommend PFAFF chain lubricant, order no. 280-1-120 106.

12 Adjustment

12.01 Notes on adjustment

All following adjustments are based on a fully assembled machine and may only be carried out by expert staff trained for this purpose.
Machine covers, which have to be removed and replaced to carry out checks and adjustments, are not mentioned in the text.
The order of the following chapters corresponds to the most logical work sequence for machines which have to be completely adjusted. If only specific individual work steps are carried out, both the preceding and following chapters must be observed.
Screws, nuts indicated in brackets ( ) are fastenings for machine parts, which must be loosened before adjustment and tightened again afterwards.



Unless stated otherwise, during all adjustment work the machine must be disconnected from the electric and pneumatic power supply!
Danger of injury if the machine is started accidentally!



Before all adjustment work switch the machine off and let it cool down!
Danger of burns if the hot-air nozzle is touched!

12.02 Tools, gauges and other accessories

- 1 set of screwdrivers with blade widths from 2 to 10 mm
- 1 set of open-ended wrenches with opening sizes from 7 to 13 mm
- 1 set of allen keys from 1.5 to 6 mm

12.03 Height and lateral adjustment of the hot air nozzle

Requirement

1. In the direction of sewing the engaged hot air nozzle 5 should be centred to feed roller 6.
2. The height adjustment of the hot air nozzle 5 depends on the material and can be set between 5 – 12 mm, see enlarged illustration in Fig. 12.01.

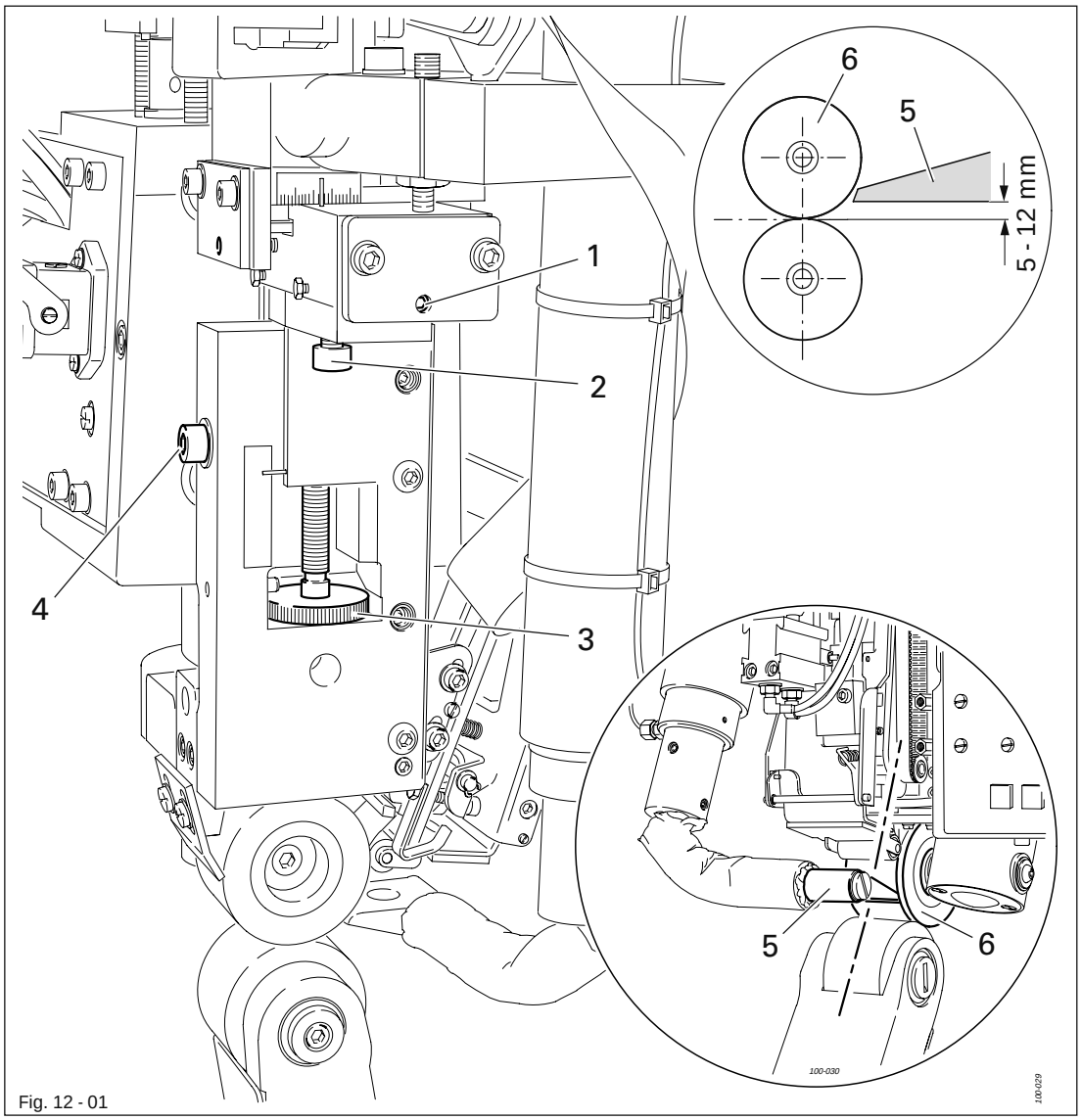

Fig. 12 - 01

- Turn adjustment screw 1 (screw 2) in accordance with requirement 1.
- Turn adjustment screw 3 (screw 4) in accordance with requirement 2.

12.04 Clearance between the hot air nozzle and the feed rollers

Requirement
There should be a clearance of 1 – 2 mm between the hot air nozzle 3 and the top feed roller 4.

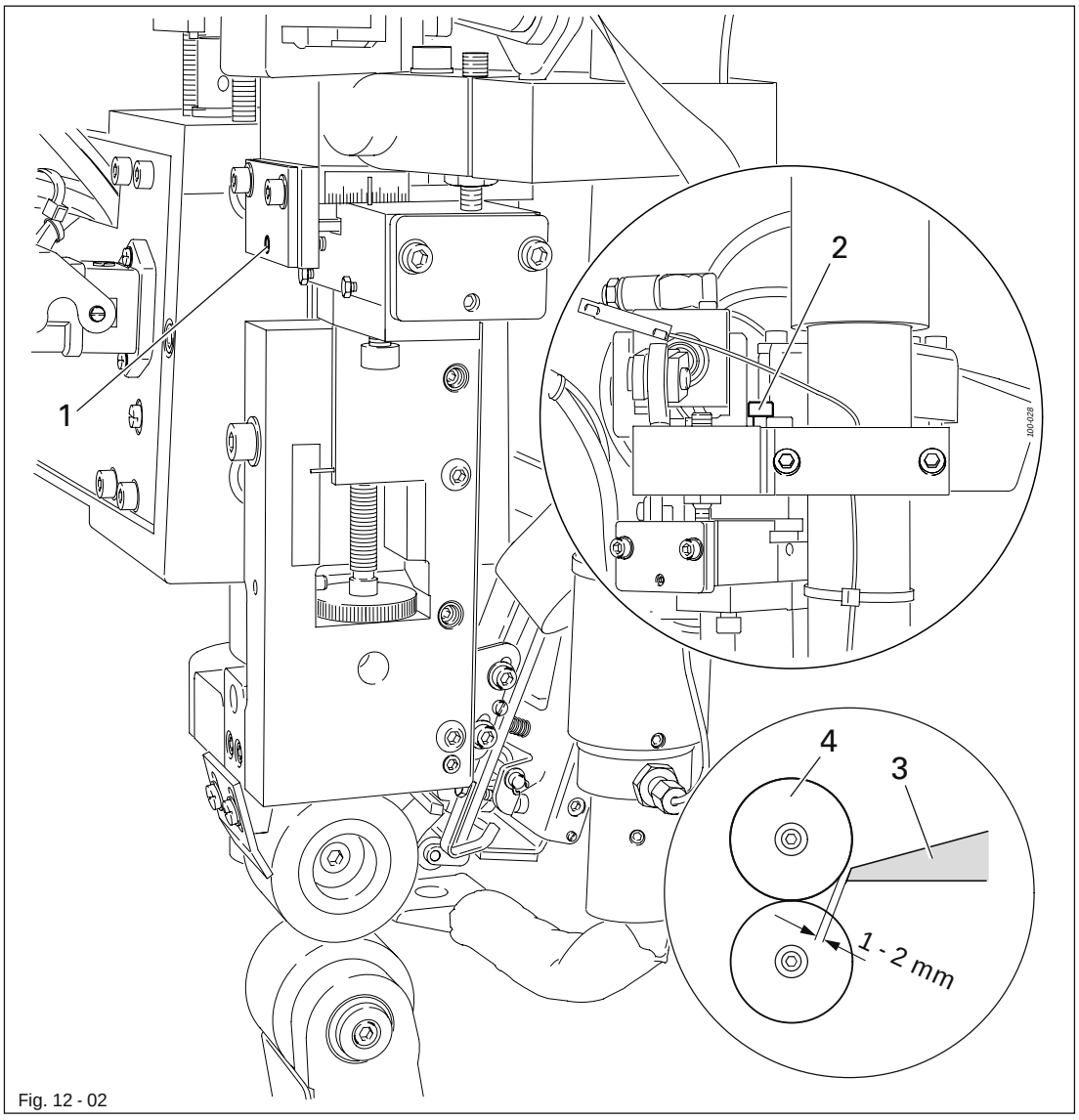

Fig. 12 - 02

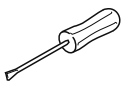

- Turn adjustment screw 1 (screw 2) in accordance with the requirement.

12.05 Setting the angle of the hot air nozzle

Requirement
The hot air nozzle 1 should be positioned as shown in the enlarged illustration in Fig. 12.01.

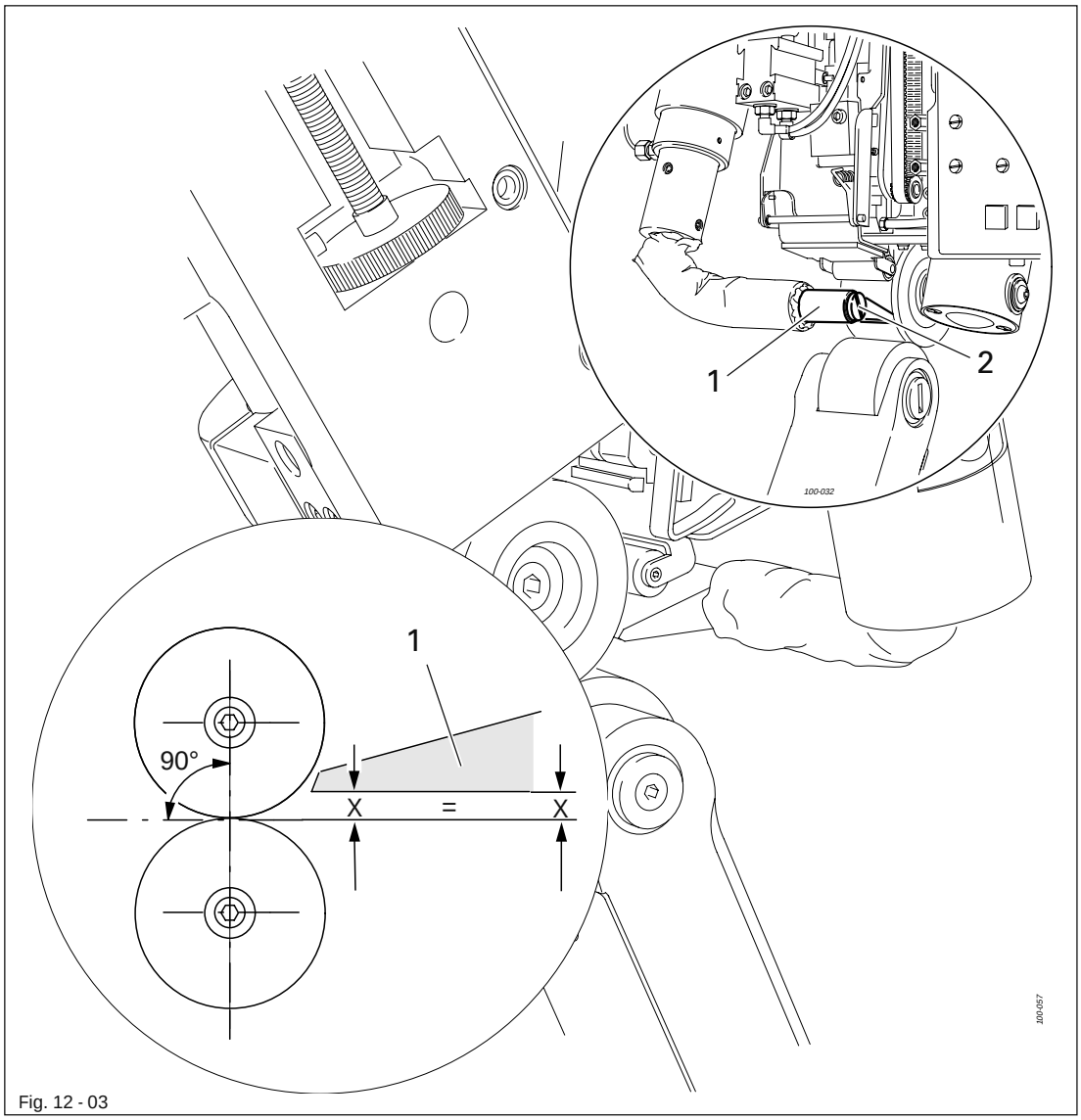

Fig. 12 - 03

- Adjust the hot air nozzle 1 (screw 2) in accordance with the requirement.
- Check the height of the hot air nozzle, see Chapter 12.03 Height and lateral adjustment of the hot air nozzle.

12.06 End stop of the hot air nozzle swivel unit

Requirement
The engaged hot air nozzle 3 should be parallel to the feed rollers.

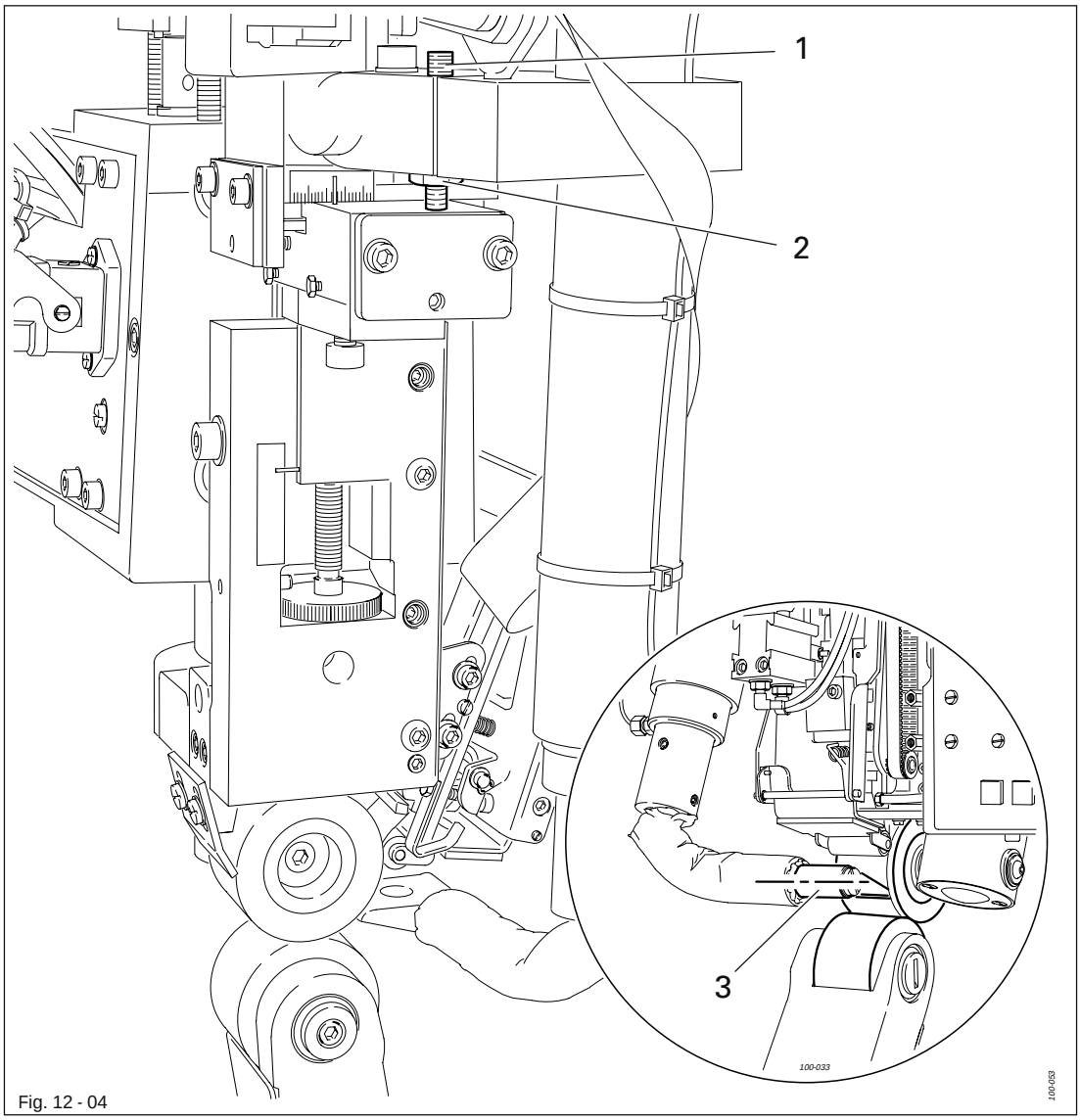

Fig. 12 - 04

- Adjust screw 1 (nut 2) in accordance with the requirement.

12.07 Changing the heating cartridge

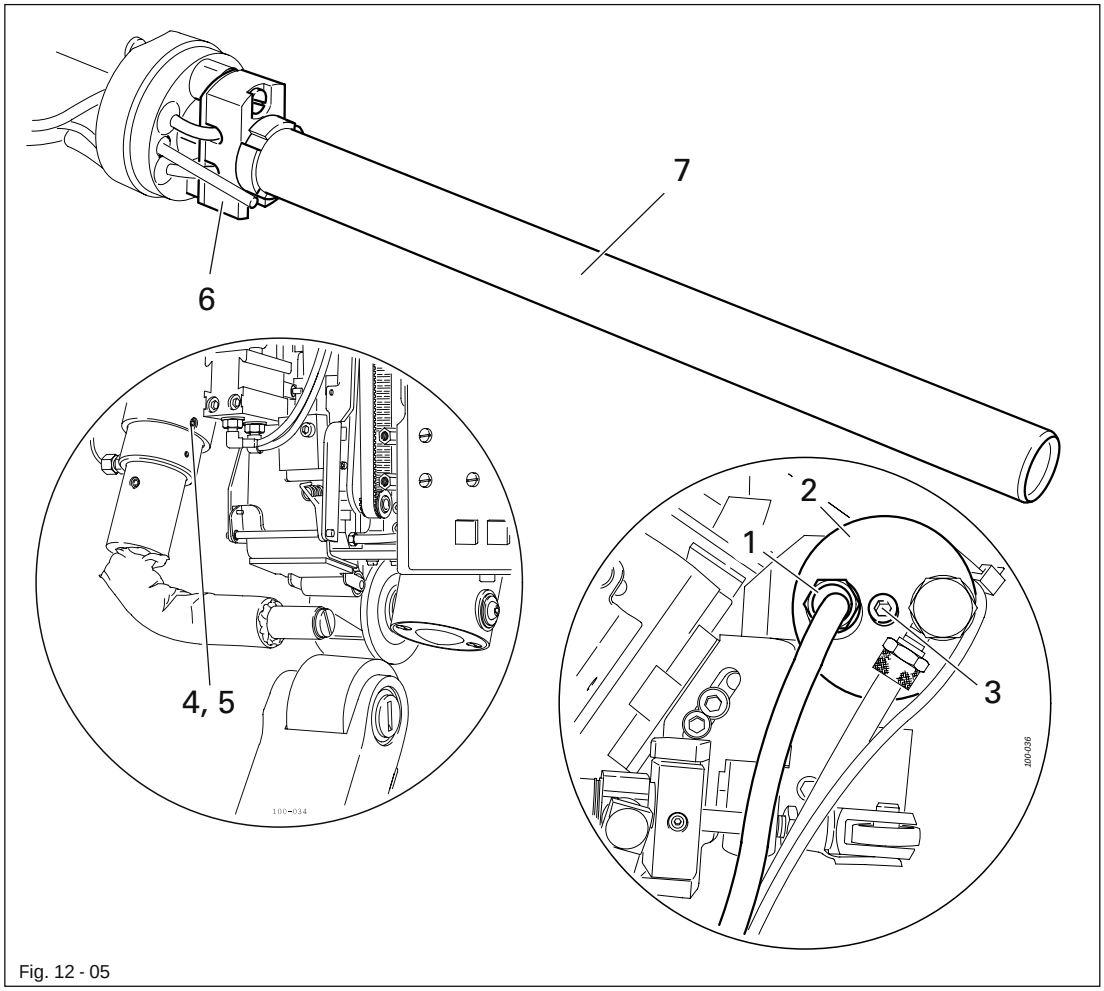

Fig. 12 - 05



Wait until the heating element has cooled down! Danger of burns!



Disconnect the mains plug!



Danger from electric voltage!

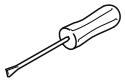

- Loosen the cable screw 1.
- Remove cap 2 (screw 3).
- Remove screw 4 and loosen screw 5 (underneath).
- Pull out socket 6 together with the heating cartridge 7.
- Remove heating cartridge 7 from socket 6.
- Installation takes place in the reverse order, taking care that screw 5 must only be tightened slightly (max. 1 Nm).

12.08 Changing the temperature sensor

Requirement
The temperature sensor 5 should be inserted as far as possible into the hot air tube.

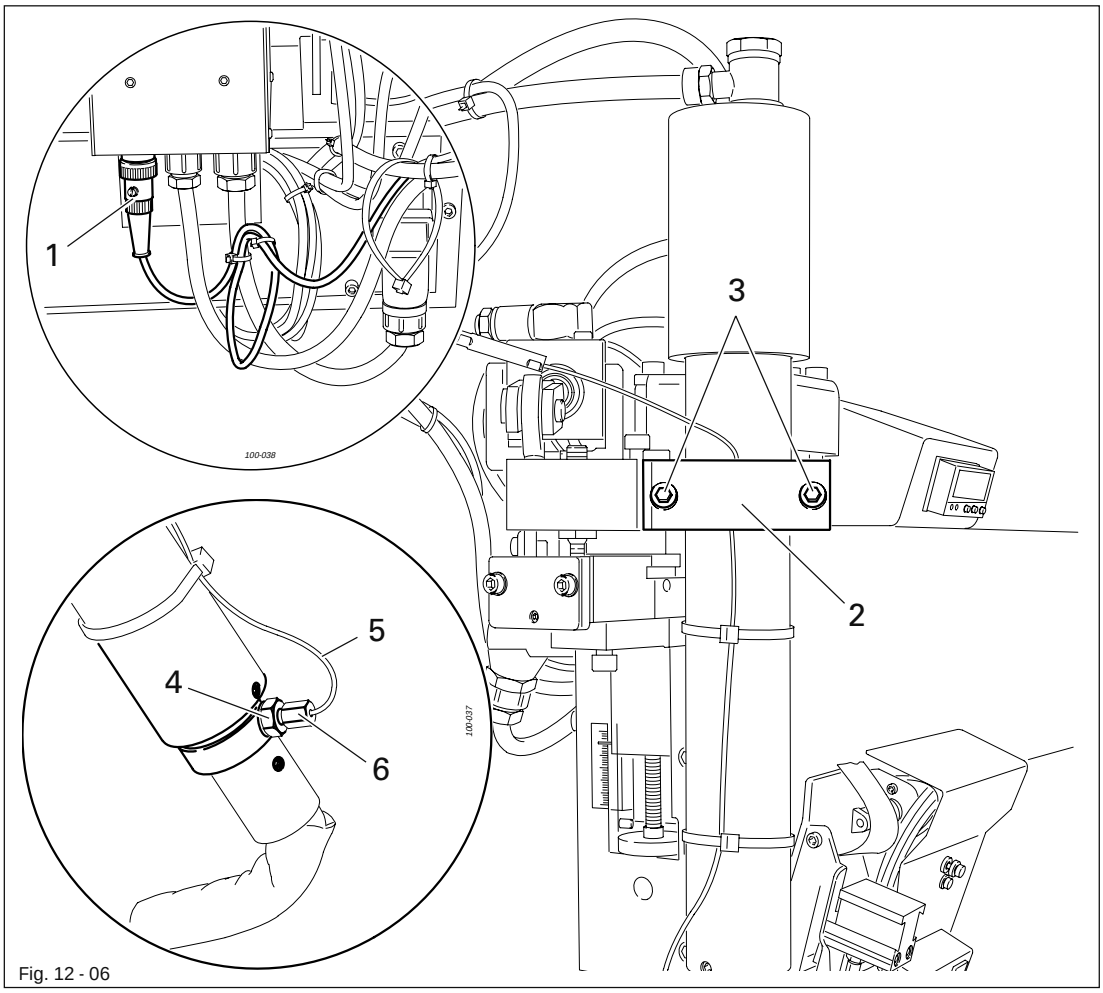

Fig. 12 - 06

Wait until the heating element has cooled down! Danger of burns!

Disconnect the mains plug!

Danger from electric voltage!

- Pull out plug 1 (blue cable).
- Remove half liner 2 (screws 3).
- Remove nut 4 together with temperature sensor 5.
- Screw on new temperature sensor 5 together with new nut 4.

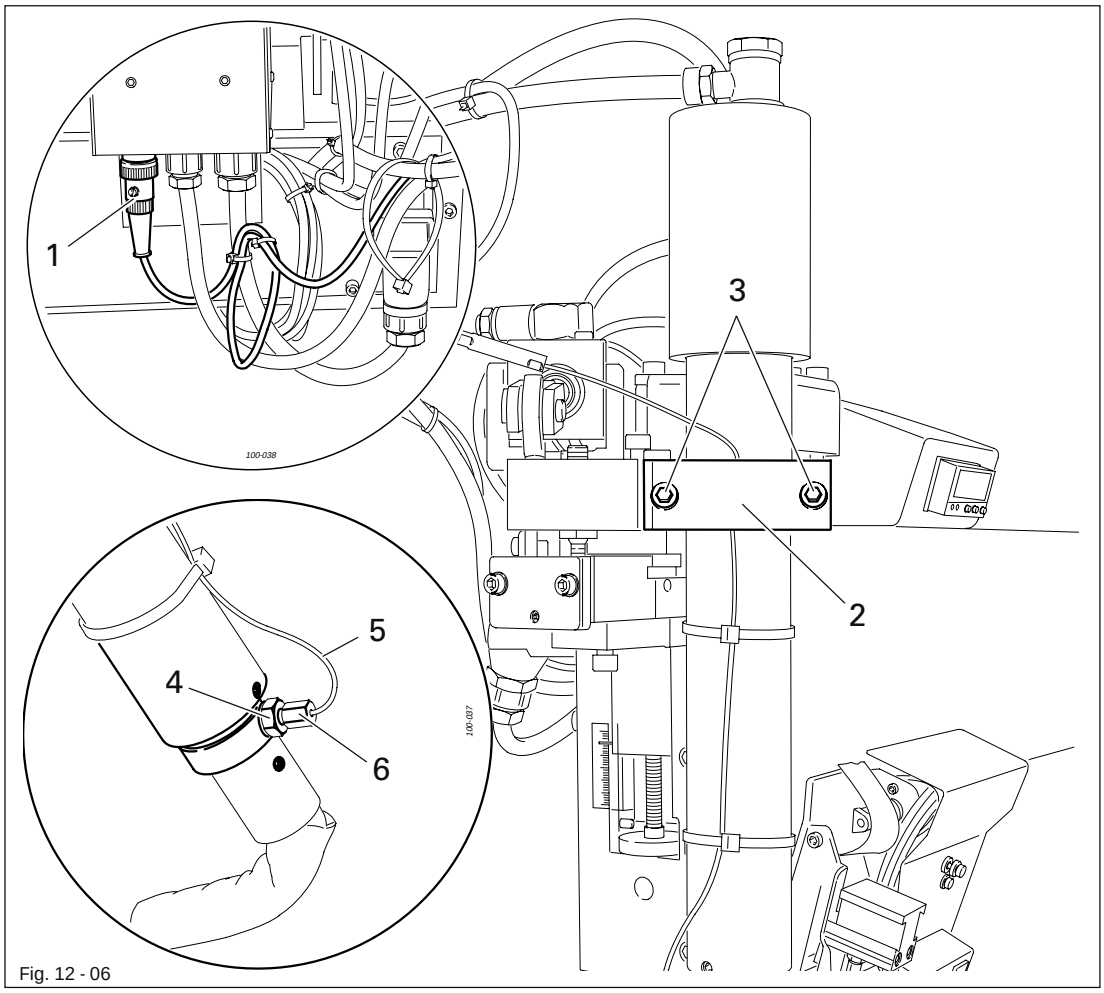

Fig. 12 - 06

- Push temperature sensor 5 as far as possible into the hot air tube and fix it in this position by tightening nut 6.
- Installation continues in the reverse order.
- Adjustments in accordance with Chapter 12.03 Height and lateral adjustment of the hot air nozzle and Chapter 12.04 Clearance between the hot air nozzle and the feed rollers.

12.09 Tensioning the drive chains

The drive chains to the feed rollers should be tensioned, if the feed rollers have too much backlash.

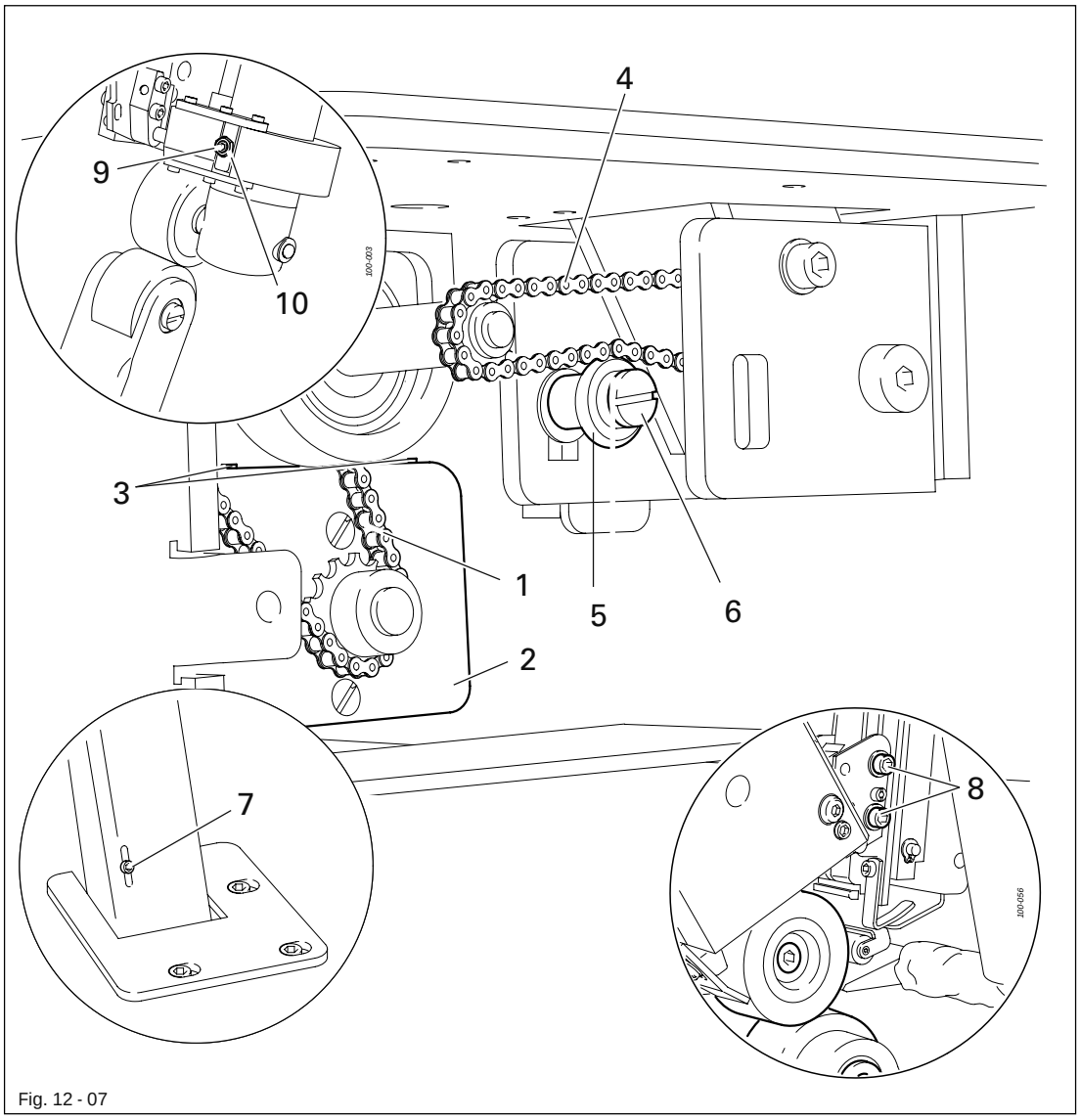

Fig. 12 - 07

- Tension bottom drive chain 1 by shifting motor mounting plate 2 (screws 3)
- Tension top drive chain 4 by shifting the chain adjuster 5 (screw 6).
- Tension drive chain in the lower post by turning screw 7.
- Remove sealing tape trimmer (screws 8).
- Tighten the drive chain of the top feed roller by turning screw 9 (nut 10).
- Attach sealing tape trimmer.

12.10 Tensioning the toothed belt

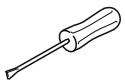

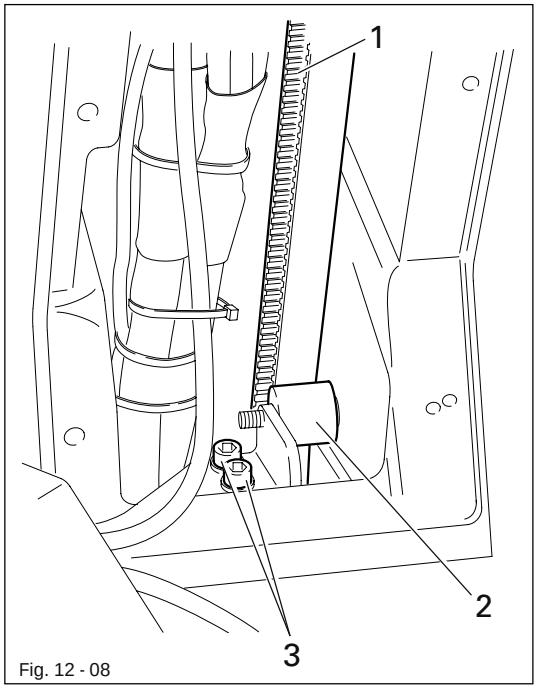

Fig. 12 - 08

- Tension toothed belt 1 by pressing roller 2 (screws 3).

12.11 Changing the feed rollers

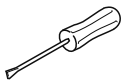

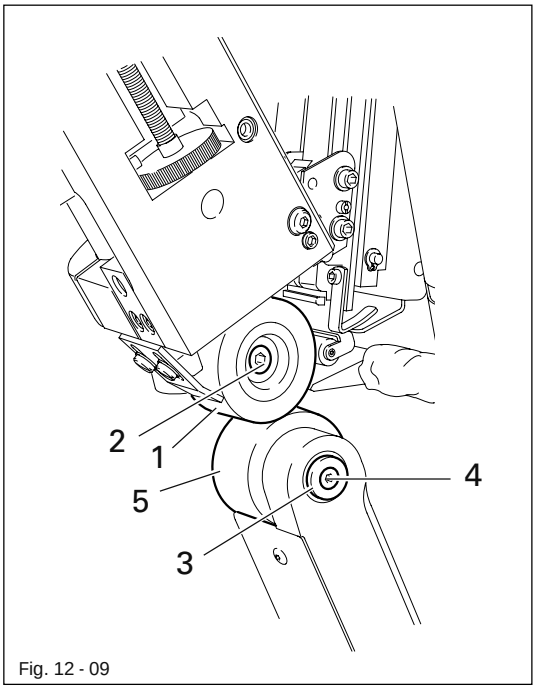

Fig. 12 - 09



Allow the hot-air nozzle to cool down!
Danger of burns!

- Change top feed roller 1 (screw 2).
- Remove disc 3 (screw 4) and knock off shaft towards the right.
- Change bottom feed roller 5 .

12.12 Tape cutting device

12.12.01 Knife

Requirement
Knife 1 should move easily and cut reliably.

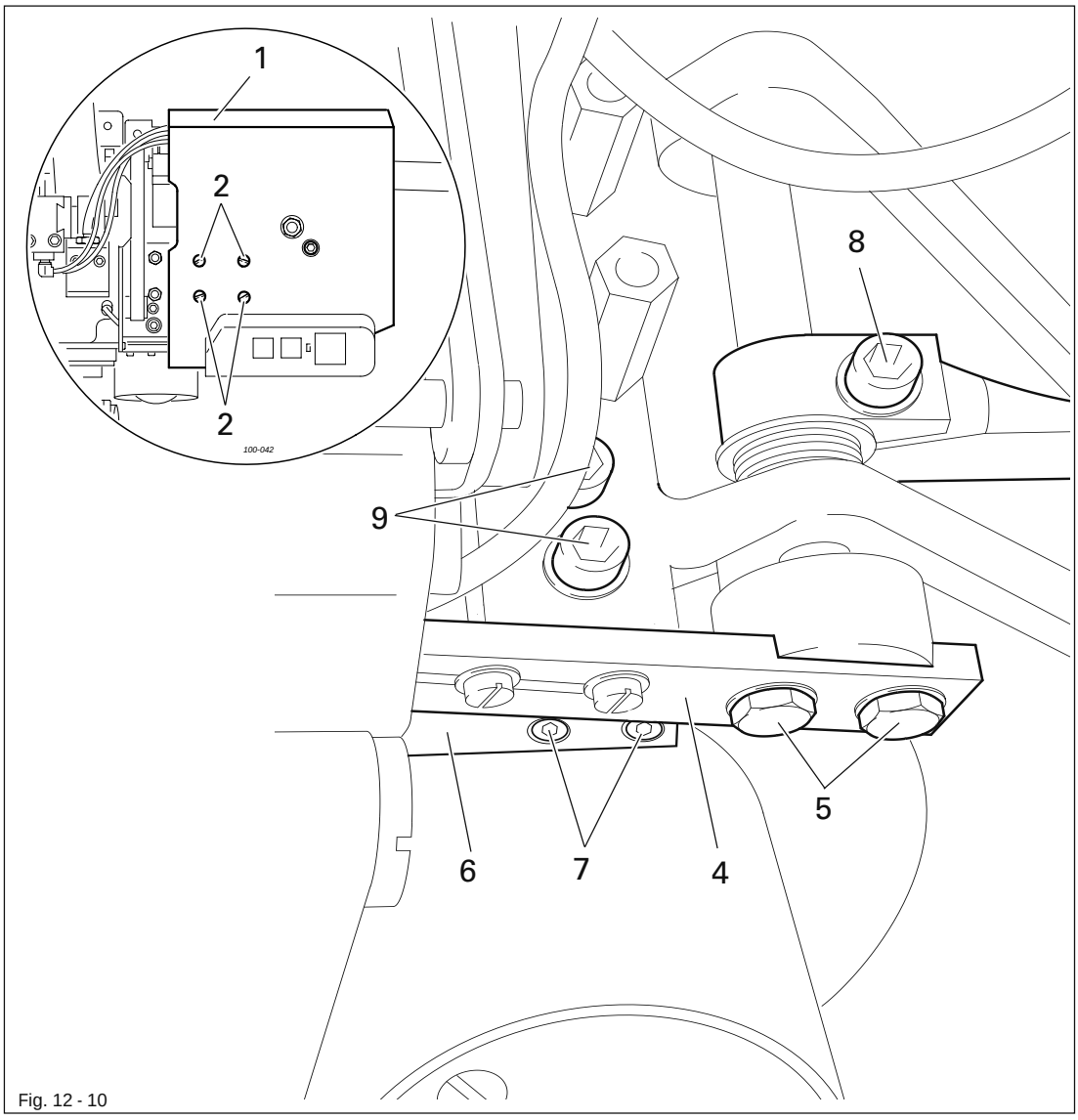

Fig. 12 - 10

- Remove cover 1 (screws 2 and 3).
- Remove loose knife 4 (screws 5) and counter knife 6 (screws 7).
- Screw on new knife.
- Adjust the knife pressure (screw 8) and cutting angle (screws 9) in accordance with the requirement.
- Carry out a cutting test.
- Screw on cover 1.

12.12.02 Air jet setting

Requirement

1. During insertion the tape must not roll itself up.
2. After cutting the tape must be pressed against the top feed roller by the air current.

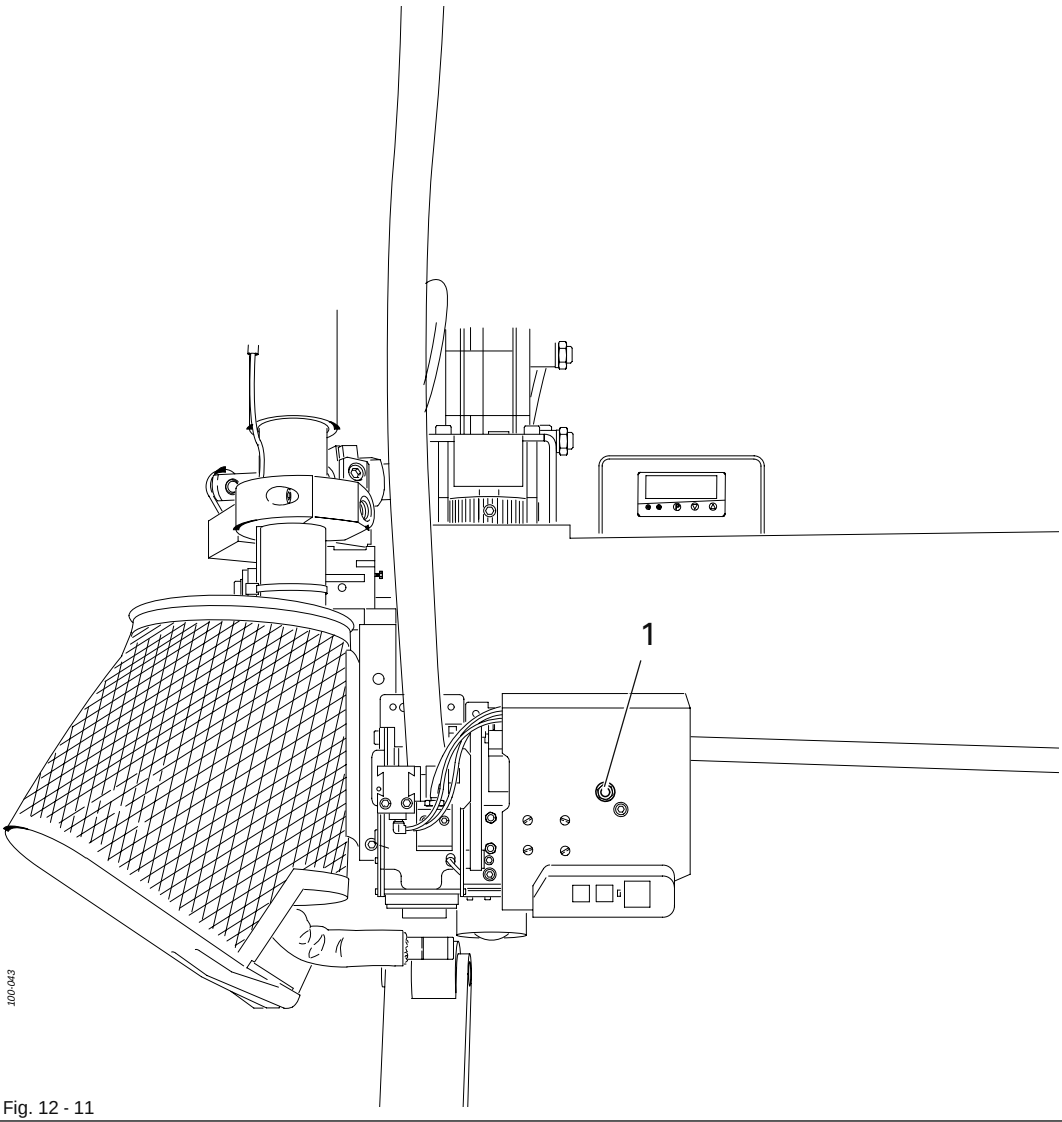

Fig. 12 - 11

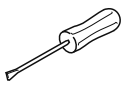

- Adjust the throttle 1 in accordance with the requirement.

12.13 Checking the fuses

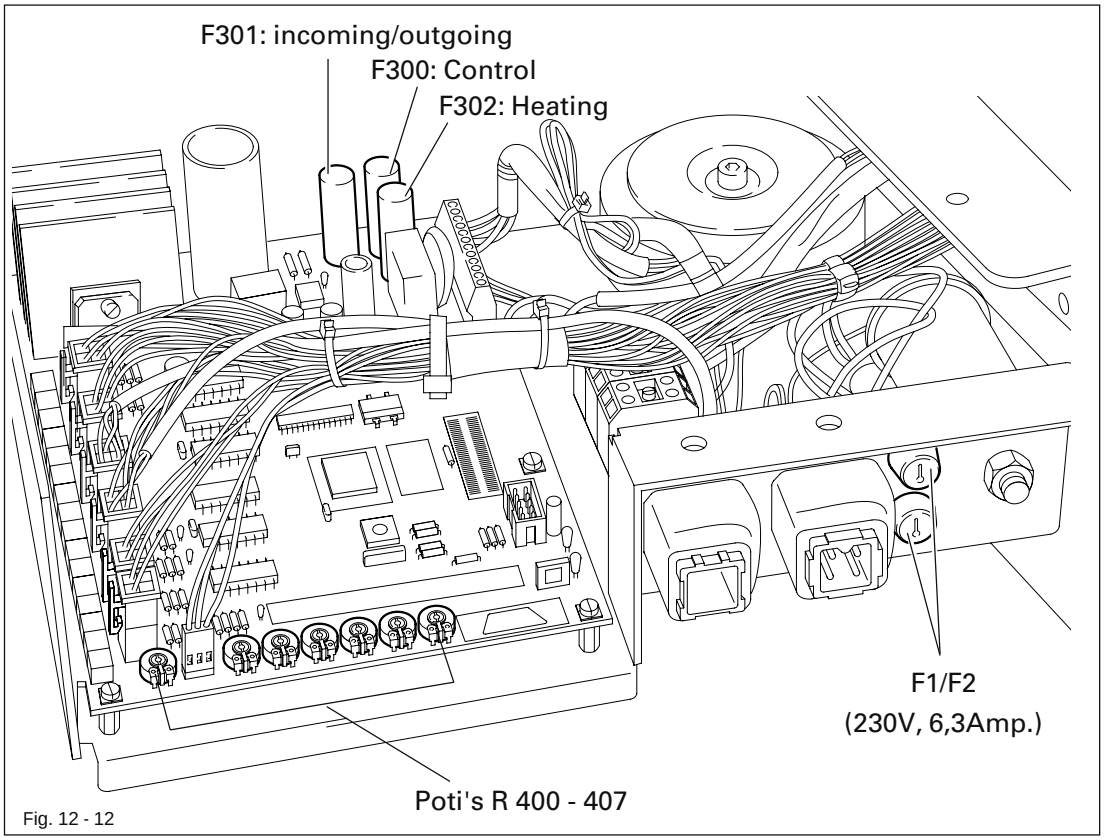

Fig. 12 - 12

The purpose of the fuses is to provide protection against major damage in case of a short-circuit or overload.

Disconnect the mains plug!

Danger from electric voltage!

Before switching the machine on again, first eliminate the cause of the fault!

- Change fuses F1/F2, F300, F301 or F302 as required.
- To change the fuses, pull out the fuse box on the right side of the machine base.
- When pushing the fuse box back into position, make sure that no wires are trapped.

Poti	Function
R400	Time: Hot air engaged/feed roller on
R401	Time: Drive, tape dispenser off
R402	Time: Feed roller lowered
R403	
R404	Time: Feed roller reverse off (foot switch pos. 2 free)
R405	Time: Feed roller raised/tape feed on
R3	Time: +/- Correction for disengaging hot air after cutting tape
R407	Time: Hot air disengaged/feed roller reverse on

13 Circuit diagram

Reference list for the circuit diagram

A1	Printed circuit board M-DX-8A
B0	Temperature sensor
B1	Lower feed roller 2nd stage
B2	Tape reel on
E1	Air heater
K300	Air heater on
M1	Feed roller drive motor
M2	Tape reel drive motor
M3	Tape position drive motor
N1	Temperature control device
R1	Speed feed roller forwards
R2	Time: Tape length
R3	Time: ± correction for hot air
	Automatic disengaging after tape trimming
R4	Engage feed roller / air heater
R400	Time: Air heater engaged -> feed roller on
R401	Time: Drive unit tape dispenser off
R402	Time: Feed roller lowered -> engage air heater
R404	Time: Feed roller in reverse off Foot Switch 2nd position free
R405	Time: Feed roller raised -> tape feed motion on
S3	P – air pressure > 0.2 bar
S4	Tape knife on
S5	Feed roller in reverse
S6	Press
S7	Lock raise feed roller
S8	Feed tape
V1	Permanent light -> S7/B1 activated or R1=0
	Tact ratio 1:1-> P air pressure < 0.2 bar
	Tact ratio 1:3 -> S6 activated
Y1	Feed roller lowered
Y2	Disengage air heater
Y3	Tape knife on
Y4	Tape clamp closed
Y5	Feed roller lowered 2nd stage

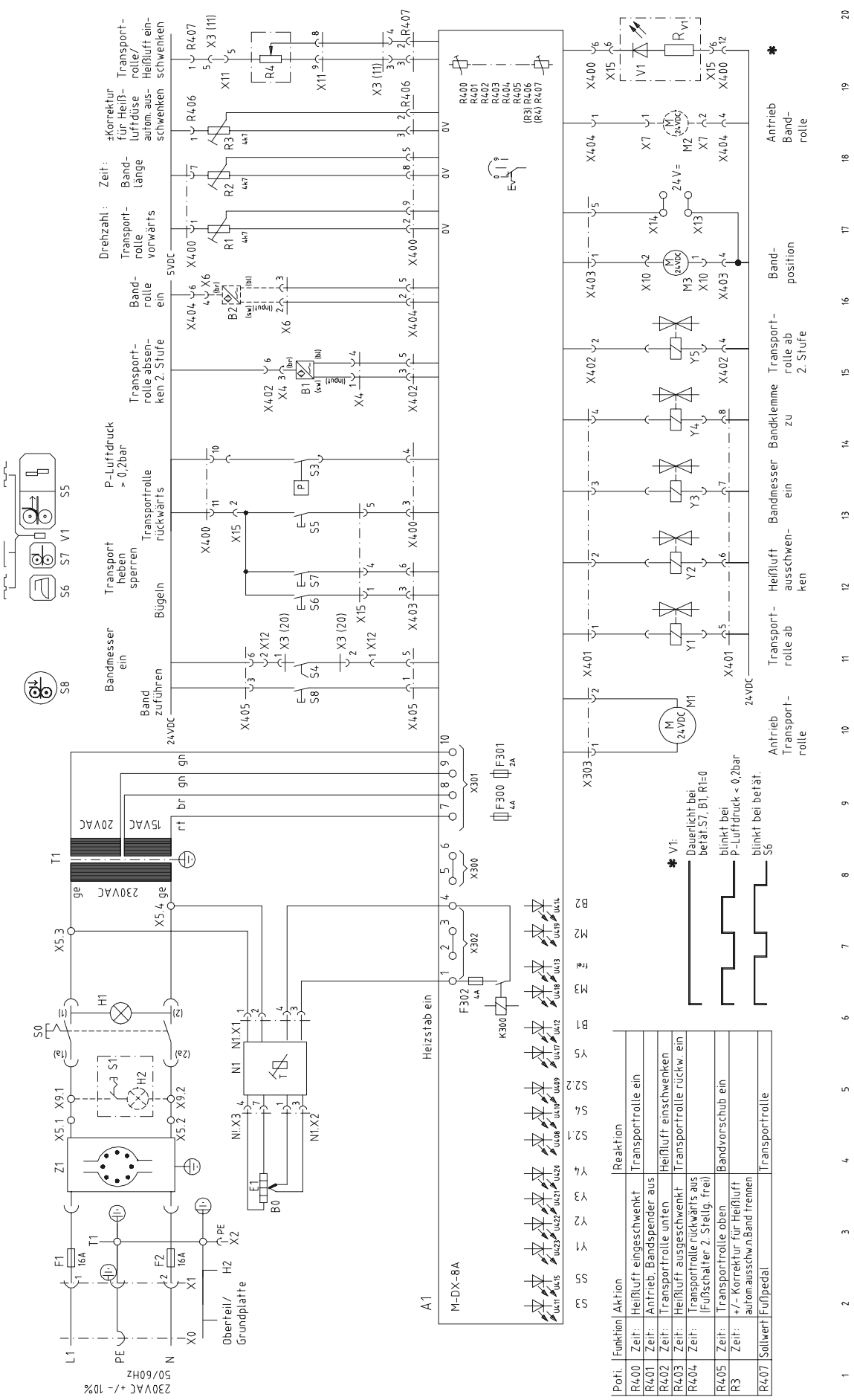

Poti.	Funktion	Aktion	Reaktion
R400	Zeit:	Heißluft eingeschwenkt	Transportrolle ein
R401	Zeit:	Antrieb, Bandspender aus	
R402	Zeit:	Transportrolle unten	Heißluft einschwenken
R403	Zeit:	Heißluft ausgeschwenkt	Transportrolle rückw. ein
R404	Zeit:	Transportrolle rückwärts aus (Fußschalter 2. Stellg. frei)	
R405	Zeit:	Transportrolle oben	Bandvorschub ein
R3	Zeit:	+/- Korrektur für Heißluft autom.ausschw.n.Band trennen	
R407	Sollwert	Fußpedal	Transportrolle

PFAFF® Industrial



Europäische Union
Wachstum durch Innovation – EFRE



PFAFF Industriesysteme
und Maschinen AG

Hans-Geiger-Str. 12 - IG Nord
D-67661 Kaiserslautern

Phone: +49-6301 3205 - 0
Fax: +49-6301 3205 1386
E-mail: info@pfaff-industrial.com

Hotlines:

Technical service:	+49-175/2243-101
Application consultance:	+49-175/2243-102
Spare-parts hotline:	+49-175/2243-103

Printed in Germany

© PFAFF Industriesysteme und Maschinen AG 2009, PFAFF is the exclusive trademark of VSM Group AB.PFAFF Industriesysteme und Maschinen AG is an authorized licensee of the PFAFF trademark.