PFAFF® Industrial

8304-020

INSTRUCTION MANUAL

This instruction manual applies to machines from the following serial numbers onwards:
11 031 →

296-12-18 418/002
Betriebsanleitung engl. 06.09

The reprinting, copying or translation of PFAFF Instruction Manuals, whether in whole or in part, is only permitted with our previous authorization and with written reference to the source.

PFAFF Industriesysteme
und Maschinen AG

Hans-Geiger-Str. 12 - IG Nord
D-67661 Kaiserslautern

Contents ..... Chapter - Page

1	**Safety**	**1 - 1**
1.01	Regulations	1 - 1
1.02	General notes on safety	1 - 1
1.03	Safety symbols	1 - 2
1.04	Important points for the user	1 - 2
1.05	Operating and technical personnel	1 - 3
1.05.01	Operating personnel	1 - 3
1.05.02	Technical personnel	1 - 3
1.06	Danger warning	1 - 4
2	**Proper use**	**2 - 1**
3	**Specifications**	**3 - 1**
4	**Disposal of the machine**	**4 - 1**
5	**Transport, packing and storage**	**5 - 1**
5.01	Transport to the customer's premises	5 - 1
5.02	Transport within the customer's premises	5 - 1
5.03	Disposal of packing	5 - 1
5.04	Storage	5 - 1
6	**Explanation of the symbols**	**6 - 1**
7	**Controls**	**7 - 1**
7.01	Main switch	7 - 1
7.02	Foot switch	7 - 1
7.03	Locking foot switch (optional)	7 - 2
7.04	Temperature regulator / fault indicator	7 - 2
7.05	Status display of temperature control	7 - 3
7.06	Regulator for drive roller start delay	7 - 3
7.07	Regulator for heat-sealing speed	7 - 4
7.08	Selection switch for operational modes	7 - 4
7.09	Regulator for hot-air pressure (only on machines with hot-air)	7 - 5
7.10	Regulator for feed roller pressure	7 - 5

Contents

	Contents ..... Chapter - Page	
8	**Installation and commissioning**	**8 - 1**
8.01	Installation	8 - 1
8.01.01	Adjusting the table height	8 - 1
8.01.02	Connecting the compressed air	8 - 2
8.02	Commissioning	8 - 2
8.03	Switching the machine on/off	8 - 3
9	**Setting up**	**9 - 1**
9.01	Inserting the sealing tape	9 - 1
9.01.01	Adjusting the tape reel bracket to the size of the tape reel	9 - 1
9.01.02	Adjusting the tape width and the tape brake	9 - 2
9.02	Adjusting the penetration depth	9 - 3
9.03	Feed rollers and hot-air pressure, heat-sealing temperature and speed	9 - 3
10	**Heat sealing**	**10 - 1**
10.01	Heat-sealing principle	10 - 1
10.02	Heat-sealing process	10 - 1
11	**Care and maintenance**	**11 - 1**
11.01	Cleaning	11 - 1
11.01.01	Machines with hot wedge	11 - 1
11.01.02	Machines with hot-air nozzle	11 - 1
11.02	Check the air pressure	11 - 2
11.03	Draining the water bowl of the air filter/regulator/cleaning the filter	11 - 2
11.04	Draining the water bowl of the fine filter/changing the fine filter	11 - 3
11.05	Lubricating the drive chains	11 - 4

Contents ..... Chapter - Page

12	**Adjustment**	**12 - 1**
12.01	Notes on adjustment	12 - 1
12.02	Tools, gauges and other equipment	12 - 1
12.03	Hot-air nozzle	12 - 2
12.03.01	Side and angle alignment of the hot-airnozzle	12 - 2
12.03.02	Height adjustment and distance of the hot-air nozzle from the feed rollers	12 - 3
12.04	Adjusting the hot wedge	12 - 4
12.04.01	Hot wedge crosswise to feed direction	12 - 4
12.04.02	Height adjustment of the hot wedge	12 - 5
12.04.03	Distance of the hot wedge to and its contact pressure on the feed rollers	12 - 6
12.04.04	Grinding the hot wedge	12 - 7
12.05	Changing the heating cartridge	12 - 8
12.06	Changing the temperature probe	12 - 9
12.07	Drive chains	12 - 6
12.07.01	Tensioning the main drive chains	12 - 10
12.07.02	Tensioning drive chain in bottom post and to top feed roller	12 - 11
12.08	Fuses	12 - 12
13	**Circuit diagrams**	**13 - 1**

1 Safety

1.01 Regulations

This machine was built in accordance with the European regulations listed in the conformity and manufacturer's declarations.
In addition to this instruction manual, also observe all generally accepted statutory and other regulations and legal requirements - including those of the country in which the machine will be operated and all valid environmental-protection regulations. Regionally applicable regulations of the social insurance society for occupational accidents or other supervisory organisations are to be strictly adhered to!

1.02 General notes on safety

- This machine may only be operated by adequately trained operators and only after the instruction manual has been completely read and understood !
- The danger and safety instructions on the machine itself are to be followed!
- The machine may only be used for the purpose for which it was intended and must not be operated without its safety devices. Observe all relevant safety regulations!
- When replacing the feed rollers or the hot wedge, when leaving the workplace unattended and during servicing or repairs, the machine must be switched off at the mains switch and the plug pulled!
- Daily servicing work may be carried out only by appropriately trained personnel!
- Repairs and special maintenance work may be carried out only by technicians or persons with appropriate training!
- Work on the electrical equipment may be carried out only by qualified electricians!
- Work is not permitted on live parts and equipment! Exceptions to this are contained in the regulations EN 50110.
- Modifications and alterations to the machine may only be carried out under observance of all the relevant safety regulations!
- Only spare parts which have been approved by us are to be used for repairs! We expressly point out that any replacement parts or accessories not supplied by us have not been tested and approved by us. The installation and/or use of any such products can lead to negative changes in the structural characteristics of the machine. We shall not be liable for any damage which may be caused by non-original parts.

1.03 Safety symbols

Danger!
Special points to observe.

Danger of hands being crushed!

Danger of burns from hot surface!

Danger from electric voltage!

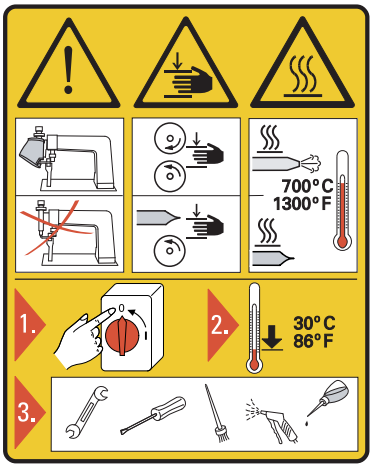

Caution

Do not operate without finger guard and safety devices. Turn off the main switch and let the machine cool down before any setting up, maintenance or cleaning work!

1.04 Important points for the user

- This instruction manual is a component part of the machine and must be available to operating personnel at all times.
  The instruction manual must be read before commissioning the machine.
- The operating and technical personnel are to be instructed as to the machine's safety mechanisms and with regard to safe working methods.
- It is the duty of the owner to operate the machine only when it is in perfect running order.
- The owner is obliged to ensure that none of the safety mechanisms are removed from the machine or deactivated.
- When processing PVC, PTFE and similar materials, the user must ensure that the maximum permissible level of toxic fumes is not exceeded.
- The user must make sure there is no high-frequency welding equipment being operated in direct proximity to the machine that exceeds the EMC limit values according to EN 60204-31 for the machine.

For further information please refer to the sales agency responsible.

1.05 Operating and technical personnel

1.05.01 Operating personnel

Operating personnel are persons responsible for setting up, operating and cleaning the machine as well as for eliminating any faults which may occur.

Operating personnel must observe the following:

- Always comply with the notes on safety in the instruction manual!
- Never adopt a working method which could have an adverse effect on the level of safety in using the machine!
- Never wear loose-fitting clothing or jewelry such as chains or rings!
- Ensure that only authorized persons have access to the danger zone around the machine.
- Always report any changes in the machine, which may limit its safety, to the immediately!

1.05.02 Technical personnel

Technical personnel are persons with special training in the fields of electrical/electronics engineering and mechanics. They are responsible for the lubrication, maintenance and repair of the machine.

Technical personnel must observe the following:

- always comply with the notes on safety in the instruction manual!
- switch the machine off at the main switch before carrying out servicing or repair work!
- never work on live parts and equipment! Exceptions are contained in the regulations EN 50110.
- replace the protective coverings after all repairs or maintenance work.

1.06 Danger warning

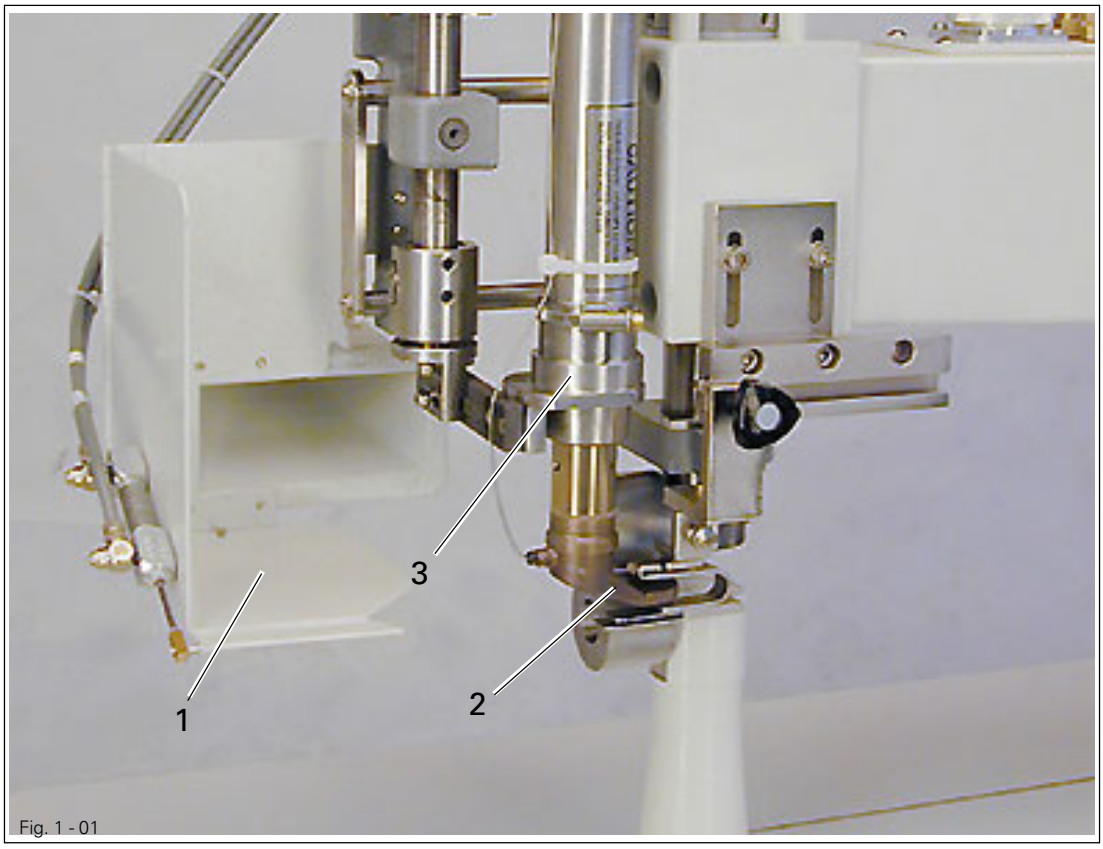

Fig. 1 - 01



Do not operate the machine without the protective cover **1** !
Danger of burns if the heating element **2** is touched!



Do not put your fingers between protective cover **1** and swivel unit **3**!
Danger of crushing when swivel unit **3** is swung in and out of place!

2 Proper use

The PFAFF 8304-020 is a heat-sealing machine with straight post, available both as the hot-air or hot wedge model.

The purpose of the machines is to heat-seal flexible thermoplastic materials such as e.g. protective covers, PVC-clothing, insulating and filter tubes, small tarpaulins and small tents, motorbike seats etc.



Any and all uses of this machine which have not been approved of by the manufacturer are considered to be inappropriate! The manufacturer cannot be held liable for any damage caused by inappropriate use of the machine! Appropriate use of the machine presupposes the observance of all operational, adjustment, maintenance and repair measures required by the manufacturer!

3 Specifications ▲

Dimensions and weight:
Length: ..... approx. 1265 mm
Breadth: ..... approx. 600 mm
Height: (without tape reel bracket) ..... approx. 1450 mm

Weight: ..... approx. 110 kg

Mains voltage
set for: ..... 230 V± 10%, 50/60 Hz, single-phase

Power input (hot wedge model): ..... approx. 1200 W
Power input (hot-air model): ..... approx. 3500 W

Max. heating capacity (hot wedge model): ..... 1000 W
Max. heating capacity (hot-air model): ..... 3300 W

Mains fuse protection: 16A

Working air pressure ..... 5 bar

Air consumption (hot wedge model): ..... 30 l/min.
Air consumption (hot-air model): ..... 60 – 120l/min.

Hot air pressure (only for hot-air model): ..... min. 0.3 bar
Max. heat-sealing speed: ..... 10 m/min.

Max. heat-sealing temperature(hot wedge model): ..... max. 450°C
Max. heat-sealing temperature(hot air model): ..... max. 650°C

Heat-sealing tape width: ..... up to 25 mm

▲ Subject to alteration

4 Disposal of the machine

- The proper disposal of the machine is the responsibility of the customer.
- The materials used on the machine are steel, aluminium, brass and various plastics. The electrical equipment consists of plastics and copper.
- The machine is to be disposed of in accordance with the locally valid environmental protection regulations.



Special care is to be taken that parts soiled with lubricants are disposed of separately in accordance with the locally valid environmental protection regulations.

5 Transport, packing and storage

5.01 Transport to the customer's premises

Within Germany the machine is delivered without packing. Machines for export are packed.

5.02 Transport within the customer's premises

The manufacturer bears no liability for transport within the customer's premises.

5.03 Disposal of packing

The packing of this machine consists of paper, cardboard, fusible fabric and wood. Proper disposal of the packing is the responsibility of the customer.

5.04 Storage

If not in use, the machine can be stored for up to six months as it is. During this time it should be protected against dust and dampness.
If the machine is stored for longer periods, its parts, especially moving parts, must be protected against corrosion, e.g. by a film of oil.

6 Explanation of the symbols

In this Instruction Manual, tasks to be carried out and important information are drawn to your attention by symbols. The symbols have the following meanings:



Note, information



Cleaning, care



Lubrication

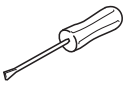

Servicing, repairing, adjustment, maintenance
(only to be carried out by specialist personnel)

7 Controls

7.01 Main switch

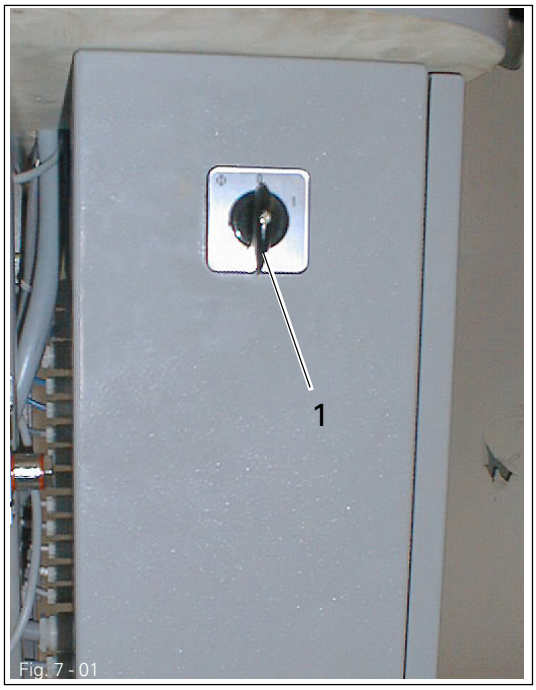

Fig. 7 - 01

- The machine is switched on or off by turning main switch **1**.

Position " **0** " : Machine is switched off

Position " **I** " : Machine is switched on



When switching off the machine, please observe the notes in **Chapter 8.03 Switching the machine on and off!**

7.02 Foot switch

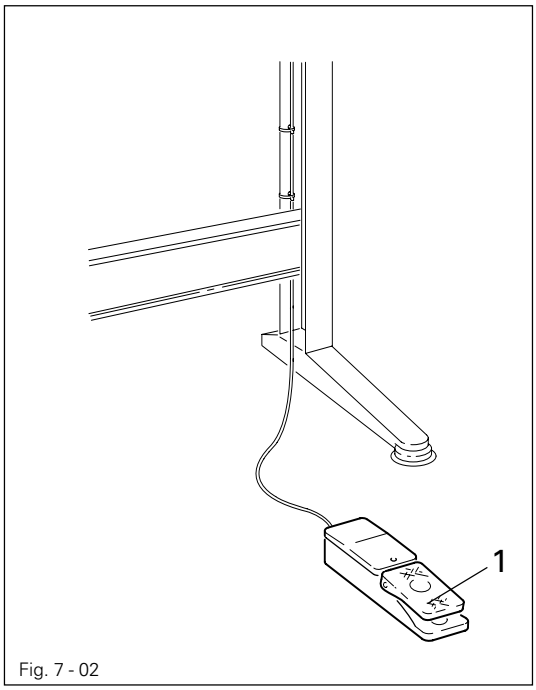

Fig. 7 - 02

- Following functions are triggered by foot switch **1.**

Position 1: Positioning the workpiece (top feed roller is lowered)

Position 2: Starting the heat-sealing process (the heating element is swung into position/feed rollers are started)



The functions triggered by pedal **1** differ according to the operational mode of the machine (see **Chapter 7.08 Operational modes-selection switch**).

7.03 Locking foot switch (optional)

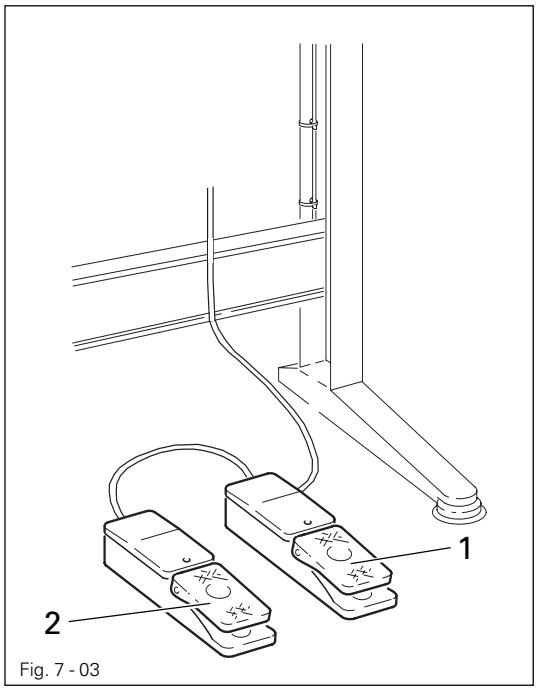

Fig. 7 - 03

- Following functions are triggered by foot switch **1** and **2**.

Switch 1: Positioning the workpiece (top feed roller is lowered)

Switch 2: Starting the heat-sealing process (the heating element is swung into position/feed rollers are started)

The functions triggered by pedal **1** differ according to the operational mode of the machine (see **Chapter 7.08 Operational modes-selection switch**).

7.04 Temperature regulator / fault indicator



Fig. 7 - 04

- The temperature can be set with the buttons **1**.
- Display **2** shows the required value and display **3** the actual value.
- When the following faults occur, fault indicator **4** lights up:

- Fault on temperature regulator or sensor.
- Overheating of the heating cartridge.
- hot-air pressure too low.

When a fault has occurred:

- Eliminate the fault.
- Acknowledge elimination of fault by pressing fault indicator button (lamp off).

7.05 Status display of temperature control



Fig. 7 - 05

- Depending on the status of the temperature control, diodes **1** - **6** light up.

Diode 1 lights up when the actual temperature deviates from the required temperature by +/-50°C.

Diode 2 lights up, if the temperature exceeds 650°C, or if the sensor breaks.

Diode 3 - no function

Diode 4 - no function

Diode 5 lights up as soon as the heating is switched on.

Diode 6 lights up when the machine is heated.

7.06 Regulator for drive roller start delay



Fig. 7 - 06

- On regulator **1** the time can be set, when the drive roller is activated after the heating element has been swung into position.

7.07 Regulator for heat-sealing speed



Fig. 7 - 07

- The heat-sealing speed is set with regulator **1**.
- Regulator **2** has no function.

7.08 Selection switch for operational modes



Fig. 7 - 08

- The operational modes of the machine can be set with the selection switch **1** by means of four switch settings. The functions are triggered by two switch positions on the pedal, or, if there are two pedals, by pedal **1** and **2**.

1 = heat-sealing
- Position 1/pedal 1 - top feed roller is lowered
- Position 2/pedal 2 - heating element swings into position, feed rollers run forwards

2 = Test run 1
- Position 1/pedal 1 - top feed roller is lowered
- Position 2/pedal 2 - heating element swings into position

3 = Test run 2
- Position 1/pedal 1 - top feed roller is lowered
- Position 2/pedal 2 - feed rollers run forwards

4 = Reverse
- Position 1/pedal 1 - top feed roller is lowered
- Position 2/pedal 2 - heating element swings into position, feed rollers run backwards

7.09 Regulator for hot-air pressure (only on machines with hot-air)



Fig. 7 - 09

- The hot-air pressure is adjusted by turning regulator **1**.
- The hot-air pressure level can be read from pressure gauge **2**.

The hot-air pressure must not drop below 0.2 bar!
If the hot-air pressure is too low, there is a risk of the heating element burning out. The heating therefore switches off automatically when the hot-air pressure is too low.

7.10 Regulator for feed roller pressure



Fig. 7 - 10

- The feed roller pressure is adjusted by pulling out and turning regulator **1**.
- The pressure level can be read from pressure gauge **2**.

8 Installation and commissioning

The machine must only be installed and commissioned by qualified personnel!
All relevant safety regulations must be observed!.

8.01 Installation

Suitable connections for power and compressed air, an even and firm floor surface and sufficient lighting must be provided for at the installation site.

8.01.01 Adjusting the table height



Fig. 8 - 01

1 Loosen screws **1** and set the table at the required height.
1 Tighten screws **1** firmly again.

8.01.02 Connecting the compressed air

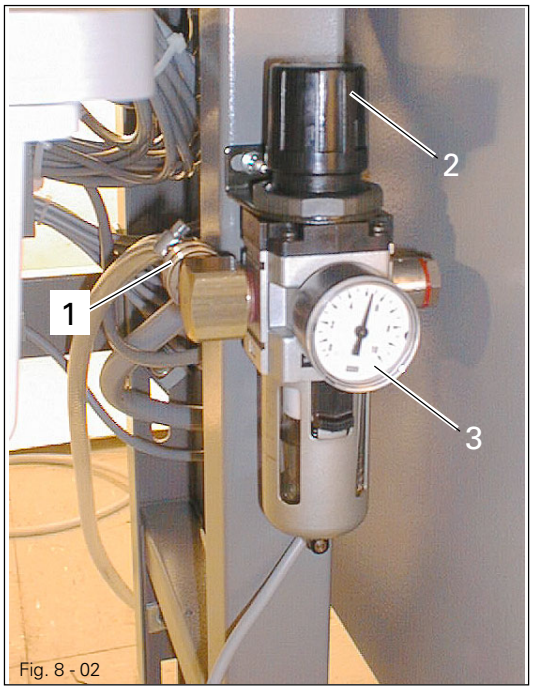

Fig. 8 - 02

- Connect the compressed air hose to coupling **1**.
- Pull regulator **2** up and turn it until gauge **3** shows an air pressure of **6 bar**.

The air must be completely oil-free and dry.
The compressed air quality influences the service life of the heating cartridge in the air heater. If the air is very damp, a compressed air cold drier with preliminary filter and secondary fine filter must be installed in front of the heat-sealing machine

8.02 Commissioning

The machine must only be commissioned by qualified personnel. All relevant safety regulations must be observed.

1 Check the machine, especially its electrical leads, for any damage.
1 Have qualified personnel check that the machine can be operated with the local mains voltage and that it is correctly connected.
If anything is not correct, do not start the machine **under any circumstances**!

8.03 Switching the machine on/off

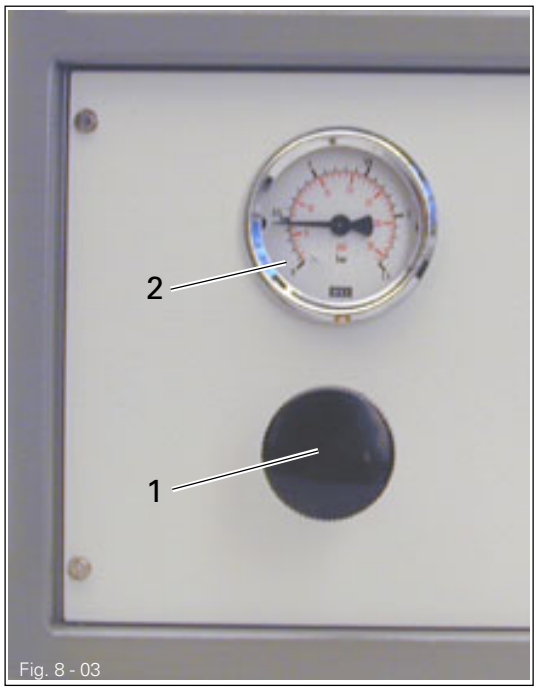

Fig. 8 - 03

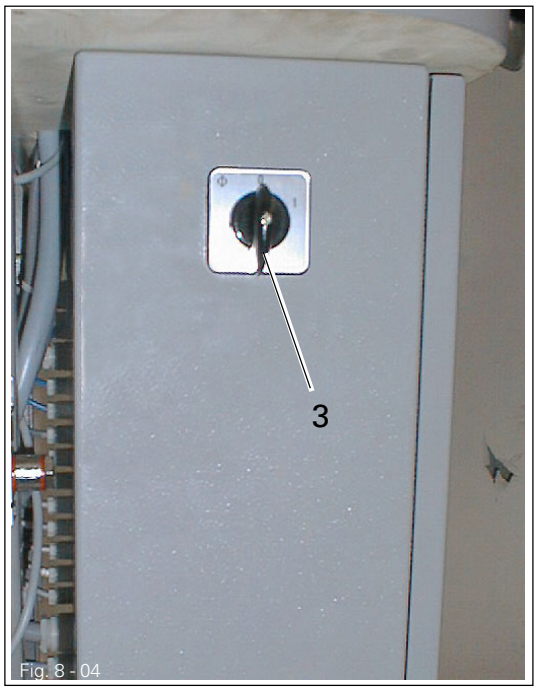

Fig. 8 - 04

- Set main switch **3** at position "1".
- In addition, on machines with hot air, turn regulator **1**, until the hot air pressure shown on gauge **2**, is at least **0.2 bar**.

The hot-air pressure must not drop below **0.2 bar**!
If the hot-air pressure is too low, there is a risk of the heating rod burning out. The heating therefore switches off automatically when the hot-air pressure is too low.

9 Setting up

All setting-up work must only be carried out by appropriately trained personnel!For all setting.-up work , the machine must be switched off.

9.01 Inserting the sealing tape

9.01.01 Adjusting the tape reel bracket to the size of the tape reel

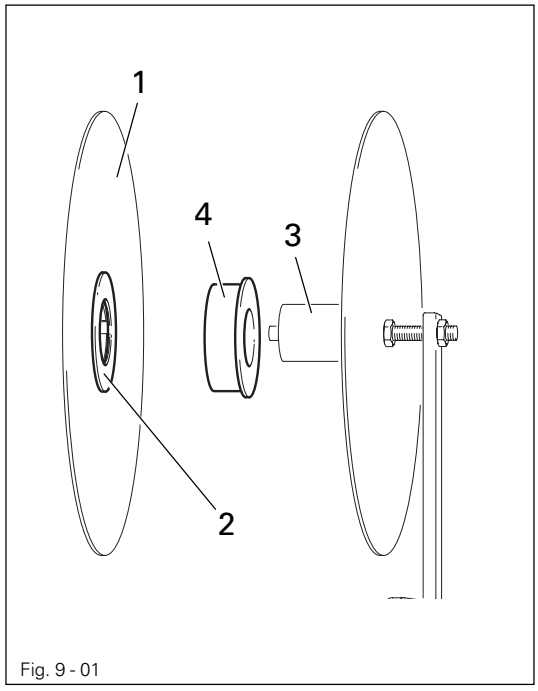

Fig. 9 - 01

- The tape reel bracket must be adjusted to the inner diameter of the tape reel: For small inner diameters, turn the front disc **1**, so that the **small** disc **2** is positioned opposite bracket **3.** The tape reel can be fitted directly onto the bracket.
- For large inner diameters, turn the front disc **1,** so that the **large** disc **2** is positioned opposite bracket **3**. Slide attachment **4** onto bracket **3** and fit the tape reel onto it.

When rolling off the reel, the sealing tape must not touch the inner wall of the tape reel bracket.

9.01.02 Adjusting the tape width and the tape brake

Requirement
The sealing tape should
1. run in the centre of the feed rollers.
2. be fed tightly but still run easily through the guide section.
3. not be slack.

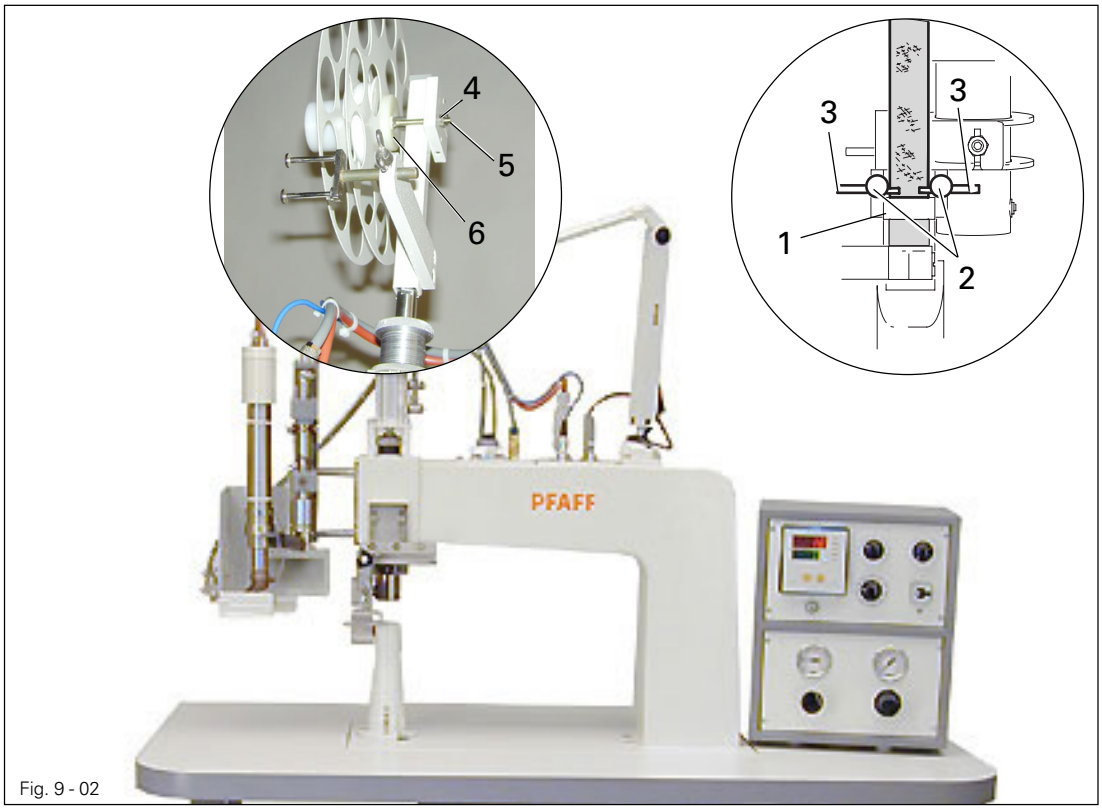

Fig. 9 - 02



Switch the machine off and let it cool down!
Danger of burns if the heating element is touched!

- Cut heat-sealing tape at a slant so that it is easier to insert.
- Insert the tape into guide **1** and pull it through up to the feed rollers.
- Loosen screw **2** and adjust guide pins **3** according to **requirement 1** and **2**.
- Loosen nut **4** and adjust the tape brake **6** with screw **5** according to **requirement 3**.

9.02 Adjusting the penetration depth

The feed roller clearance depends on the thickness of the material to be sealed. The clearance is adjusted correctly, when one ply of the workpiece fits just between the feed rollers with the top feed roller lowered.

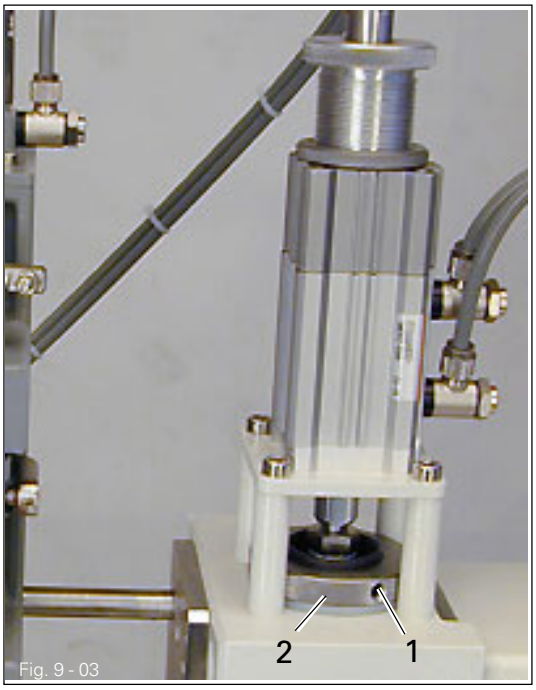

Fig. 9 - 03

Switch off the machine!
Danger of crushing between the housing and adjustment ring **1**.

- Loosen the three screws **1**.
- Adjust the feed roller clearance with adjusting ring **2**.
- Tighten screws **1**.

If necessary, reduce the pressure of the feed rollers to facilitate the adjustment of ring **2**.

9.03 Feed rollers and hot-air pressure, heat-sealing temperature and speed



Fig. 9 - 04



Fig. 9 - 05

- Switch the machine on.

Before changing the feed roller and hot air pressure, the pressure on the appropriate regulator must first be set at "0". The required pressure can then be set.

Hot-air pressure (only for machines with hot air):

- Set the hot-air pressure on regulator **1** according to the material of the workpiece (at least **0.3 bar**).

Before switching the main switch on, make sure that the hot air pressure is above **0.2 bar**!
If the hot air pressureis too low, the heating switches off automatically.

Feed roller pressure:

- Set the feed roller pressure (see Chapter 7.10) according to the material of the workpiece (**max. 5 bar**).

Heat-sealing temperature:

- Set the heat-sealing temperature on buttons **2** according to the material of the workpiece
  - hot wedge model max. **550°C**
  - hot air model max. **650°C**.
- Display **3** shows the required temperature and display **4** the actual temperature.

Heat-sealing speed

- Set the heat-sealing speed (see Chapter. 7.07) according to the material of the workpiece (**max. 10 m/min.**).

10 Heat sealing



The machine must only be operated by appropriately trained personnel! The operating staff must also make sure that only authorized persons are in the danger area of the machine!

10.01 Heat-sealing principle

In order to achieve optimum heat-sealing, certain conditions concerning the workpiece and the machine settings must be fulfilled.

The material must be:

- heat-sealable
- be suitable for use on the machine with regard to thickness and properties

In the seam area, the material to be heat-sealed must be clean and free from parting agents such as e.g. oil or silicone.

The basic requirements on the heat-sealing machine are:

- the correct working temperature of the hot-wedge or the correct hot air temperature;
- the correct setting of the hot-air pressure on machines with hot-air nozzle
- the correct setting of the hot wedge to the roller gap on machines with hot wedge
- correct selection of the feed rollers (silicone or steel)
- optimum pressure of the feed rollers on the workpiece
- correct distance between the feed rollers (penetration depth adjustment) and
- correct sealing speed.



All settings of this heat-sealing machine always depend on the type of material being heat-sealed and the ambient temperature. Due to the influence of individual operating parameters on each other, optimum settings can only be determined through test sealings.

10.02 Heat-sealing process

- Select the correct machine setting for each material (see **Chapter 9 Setting up)**
- Place the workpiece between the feed rollers.
- Fix the material using the foot switch .
  -Position 1 on machines with one foot switch
  -Foot switch 1 on machines with two foot switches
- Using the foot switch, move the heating element into position and start the feed rollers.
  -Position 2 on machines with one foot switch
  -Foot switch 2 on machines with two foot switches
- During the heat-sealing process the material must be fed manually.
- Interruption of the heat-sealing process (e.g. to change the position) the feed rollers move slightly in the reverse direction
  -Switching back the foot switch to position 1 (on machines with one foot switch)
  -Engage foot switch 1 again (on machines with two foot switches)

11 Care and maintenance

Clean hot wedge	as required
Clean hot-air nozzle	as required
Grind hot wedge	as required, usually one a week
Control the air pressure	daily, before use
Clean water bowl of air filter/regulator	daily, before use
Clean water bowl of fine filter	daily, before use
Change fine filter	once a year
Lubricate drive chains	as required

11.01 Cleaning

11.01.01 Machines with hot wedge



Switch off the machine and let it cool down!
Danger of burns if the hot wedge is touched!



- Before each use remove any burnt residues from the top and bottom side of the hot wedge with a soft, brass wire brush.

11.01.02 Machines with hot-air nozzle



Switch off the machine and let it cool down!
Danger of burns if the hot-air nozzle is touched!



- Remove any residues from the air slot of hot-air nozzle as required.

11.02 Check the air pressure

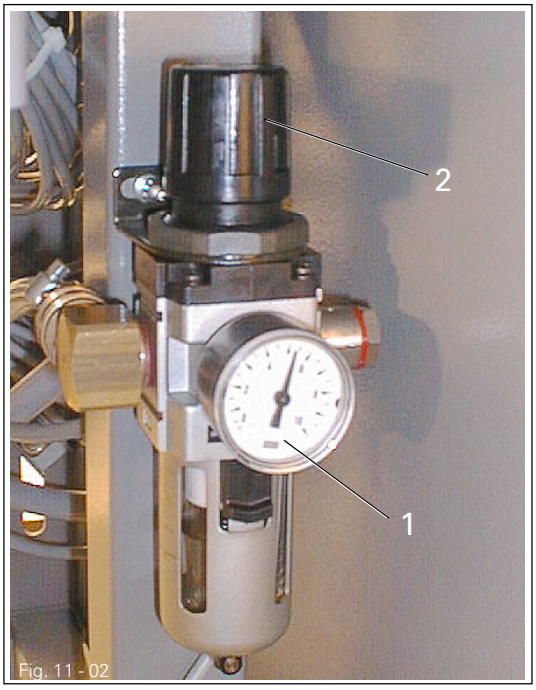

- Before each use check the air pressure on gauge **1**.
- Gauge **1** must show a pressure of **6 bar**.
- Adjust this setting if necessary.
- To do so, pull knob **2** up and turn it until the gauge shows a pressure of **6 bar**.

11.03 Draining the water bowl of the air filter/regulator/cleaning the filter

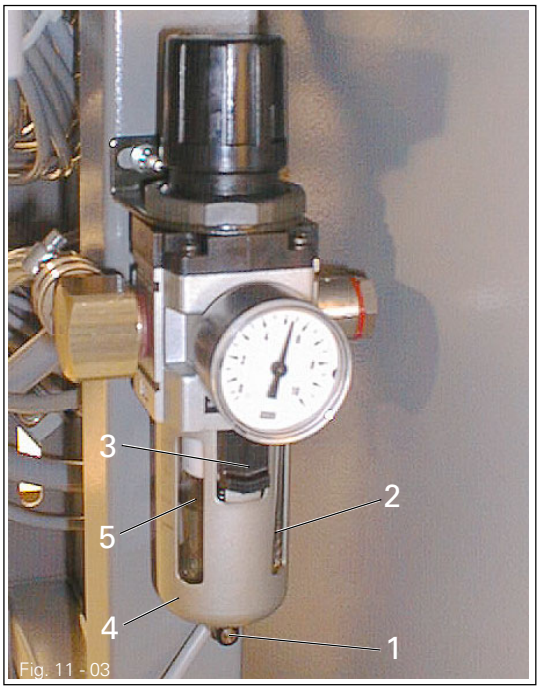

Switch off the machine!
Remove the compressed air tube from the air filter/regulator.

Draining the water bowl:

- Open drain plug **1** and drain water into water bowl **2**.

Cleaning the filter:

- Pull down catch **3** and unscrew sleeve **4**.
- Remove water bowl **2**.
- Unscrew filter **5** and clean with compressed air or with isopropyl-alcohol (order no. 95-665 735-91).
- Replace filter **5**, insert water bowl **2** and screw on sleeve **4**.

11.04 Draining the water bowl of the fine filter/changing the fine filter

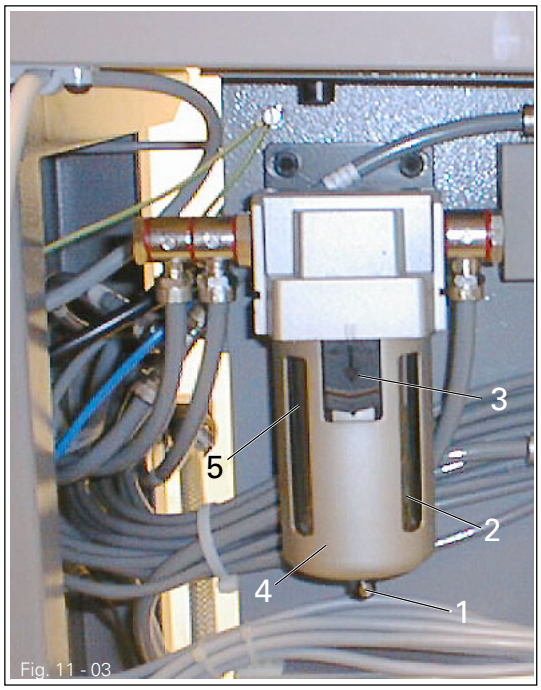

Fig. 11 - 03

Switch off the machine!
Remove the compressed air tube from the air filter/regulator.

Draining the water bowl:

- Open drain plug **1** and drain water into water bowl **2**.

Changing the filter

- Pull down catch **3** and unscrew sleeve **4**.
- Unscrew filter **5** and insert a new filter.
- Replace filter **5**, insert water bowl **2** and screw on sleeve **4**.

11.05 Lubricating the drive chains

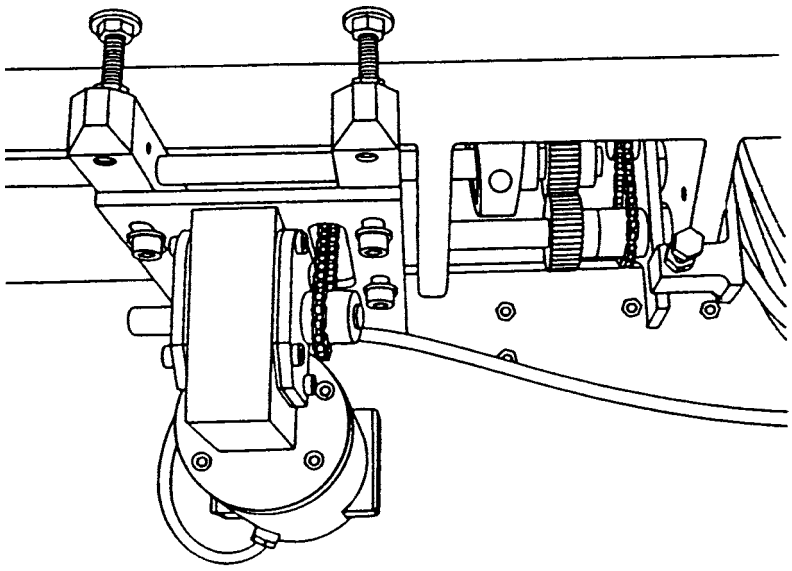

Fig. 11 - 05



- Lubricate all drive chains as required.
- Switch off the machine. Remove the machine covers and lubricate the accessible part of the chains.
- Switch on the machine and let it run a little further.
- Switch off the machine and lubricate the remaining part of the chains.



The intervals for lubrication depend on working conditions (dampness, soiling etc.).



Only use sodium bicarbonate grease with a dripping point of 150°C and a fulling penetration of 375 – 405 mm /10 at 25°C.

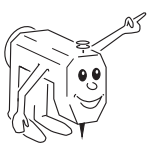

We recommend PFAFF chain lubricant, order no. 280-1-120 243.

12 Adjustment

12.01 Notes on adjustment

All adjustments in this manual are based on a fully assembled machine and may only be carried out by expert staff trained for this purpose.
Machine covers, which have to be removed and replaced to carry out checks and adjustments, are not mentioned in the text.
Screws, nuts indicated in brackets ( ) are fastenings for machine parts, which must be loosened before adjustment and tightened again afterwards.



Before all adjustment work switch the machine off and let it cool down!
Danger of burns if the heating element is touched!

12.02 Tools, gauges and other equipment

- 1 set of screwdrivers with blade widths from 2 to 10 mm
- 1 set of spanners/wrenches from 7 to 13 mm across flats
- 1 set of allen keys from 1.5 to 6 mm

12.03 Hot-air nozzle (only on machines with hot-air nozzle)

12.03.01 Side and angle alignment of the hot-air nozzle

Requirement

1. When hot-air nozzle **5** has been swung into place, it should be positioned in the centre of the feed roller **6** in feed direction.
2. When viewed from the rear, the front edge of the hot-air nozzle **5** should be paralell to the axis of feed rollers **6**.

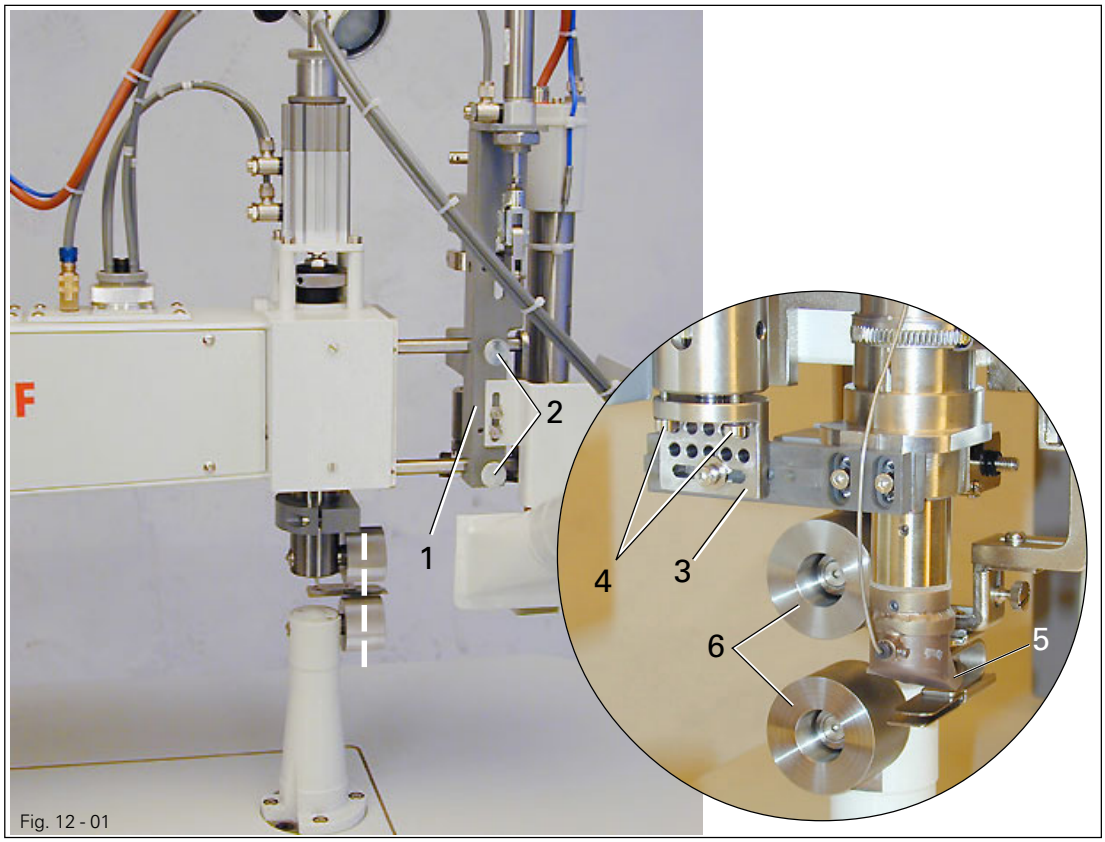

Fig. 12 - 01

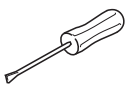

- Adjust bracket **1** (screws **2**) according to **requirement 1**.
- Adjust bracket **3** (screw **4**) according to **requirement 2**.

12.03.02 Height adjustment and distance of the hot-air nozzle from the feed rollers

Requirement

1. The height adjustment of hot-air nozzle **5** is dependent on the material and can be set over a range of **0 – 10 mm** (see magnifying glass).
2. There must be distance of approx. **1-2 mm** between hot-air nozzle **5** and the work-piece.

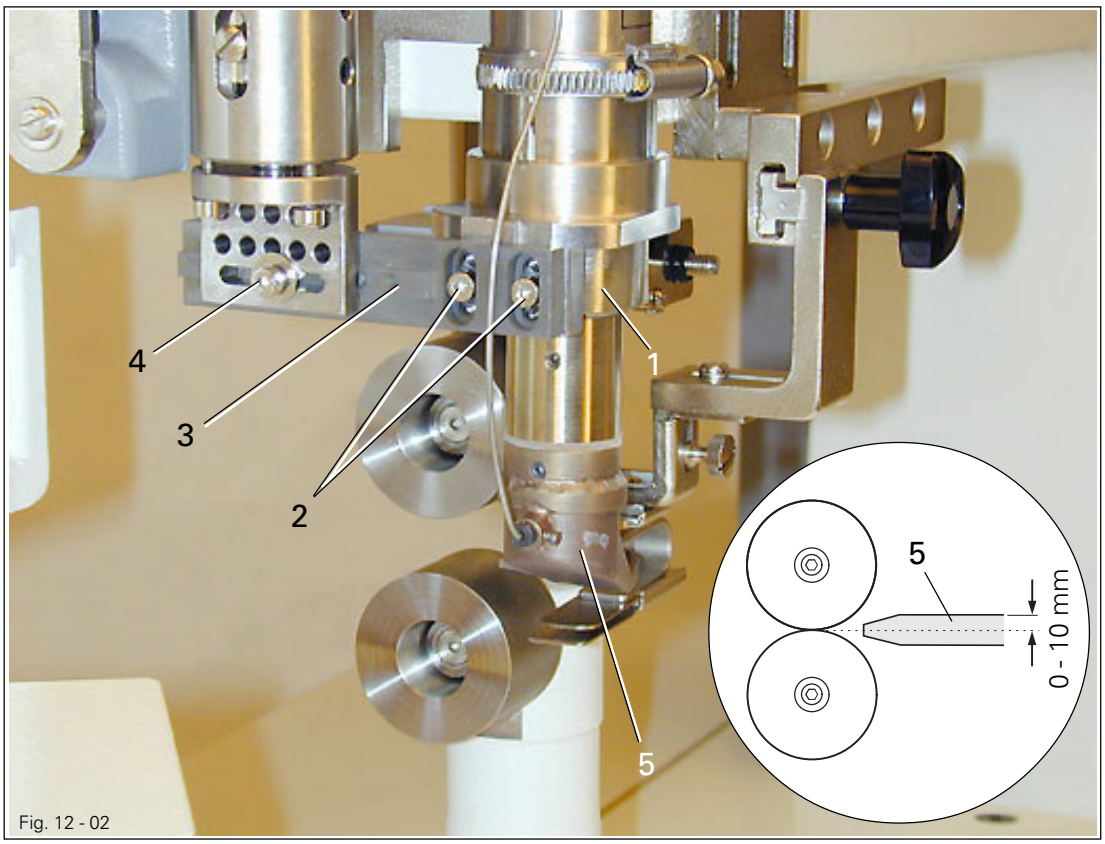

Fig. 12 - 02

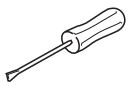

- Adjust heating element **1** (screws **2**) according to **requirement 1**.
- Adjust bracket **3** (screw **4**) according to **requirement 2**.

12.04 **Adjusting the hot wedge** (only on machines with hot wedge)

12.04.01 Hot wedge crosswise to feed direction

Requirement
In the direction of feed the hot wedge **5** should be positioned in the centre of the feed rollers **6**.

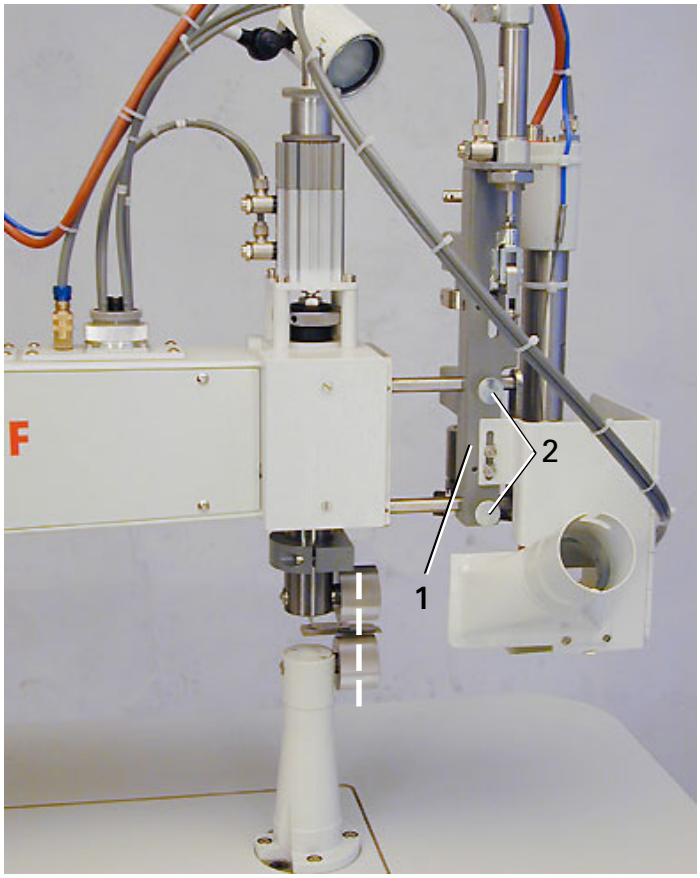

Fig. 12 - 03

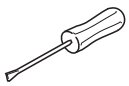

- Adjust bracket **1** (screws **2**) according to the **requirement**.

12.04.02 Height adjustment of the hot wedge

Requirement

1. When the hot wedge has been swung into position, the tip of hot wedge **7** should be positioned a distance above the bottom feed roller equivalent to the thickness of the workpiece.
2. Hinges **5** should be in a horizontal position.

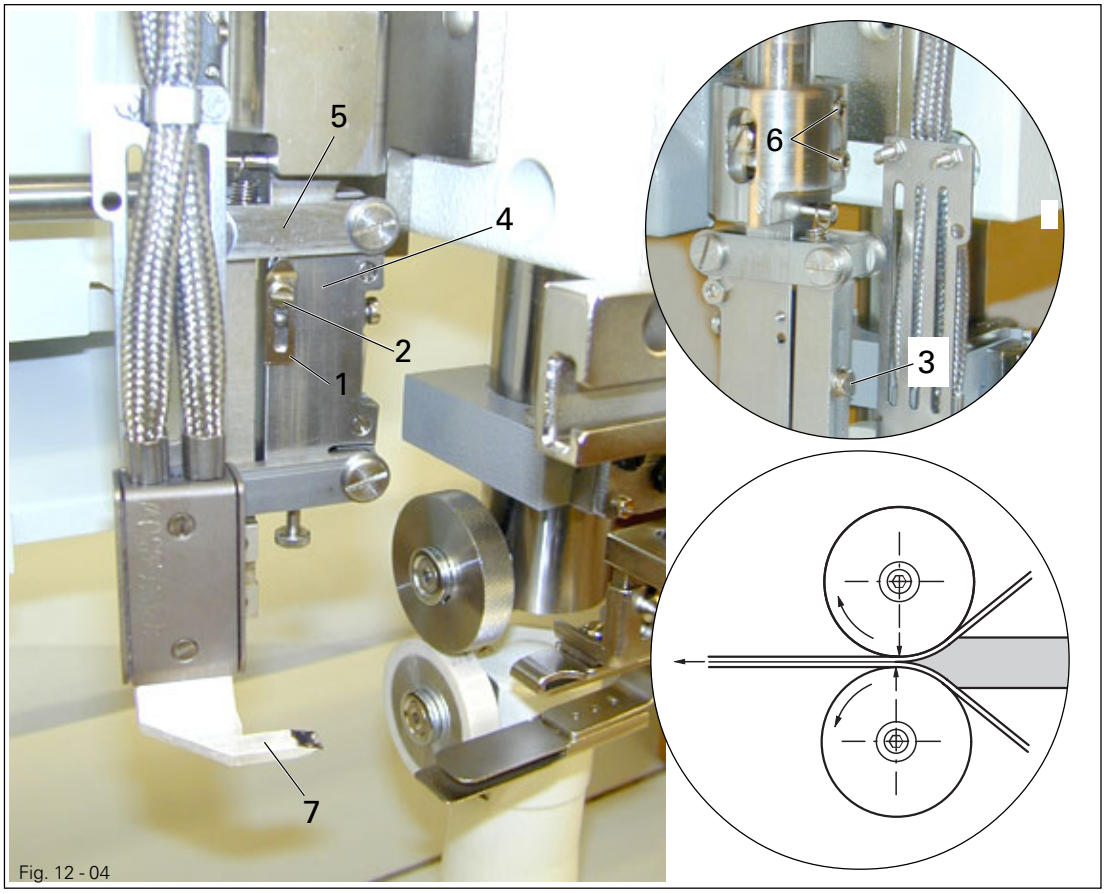

Fig. 12 - 04

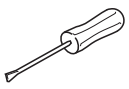

- Adjust stop **1** (screw **2**) according to **requirement 1**.
- Loosen screw **3** and adjust tension spring in heat-sealing part **4**, so that hinge **5** just rests lightly on stop **1.**
- Adjust hinge **5** (screws **6**) according to **requirement 2**.

12.04.03 Distance of the hot wedge to and its contact pressure on the feed rollers

Requirement

1. The hot wedge should rest on the workpiece.
2. The contact pressure of the hot wedge should be set, so that a good seam quality is guaranteed and the hot wedge cannot move back on cross seams.

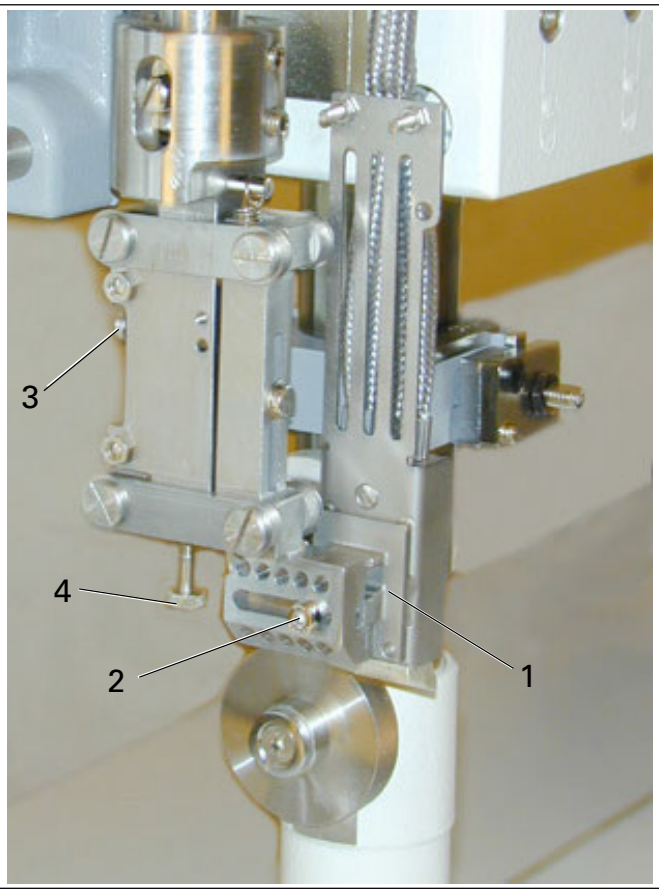

Fig. 12 - 05

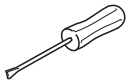

- Adjust bracket **1** (screw **2**) according to **requirement 1** (preliminary adjustment).
- Carry out precise adjustment on screw **3** according to **requirement 1**.
- Adjust the reverse movement of the hot wedge with adjusting screw **4** according to **requirement 2**.

12.04.04 Grinding the hot wedge

Grinding of the hot wedge is only required, if the hot wedge is deformed by wear or corrosion, or if a new hot wedge has been installed.

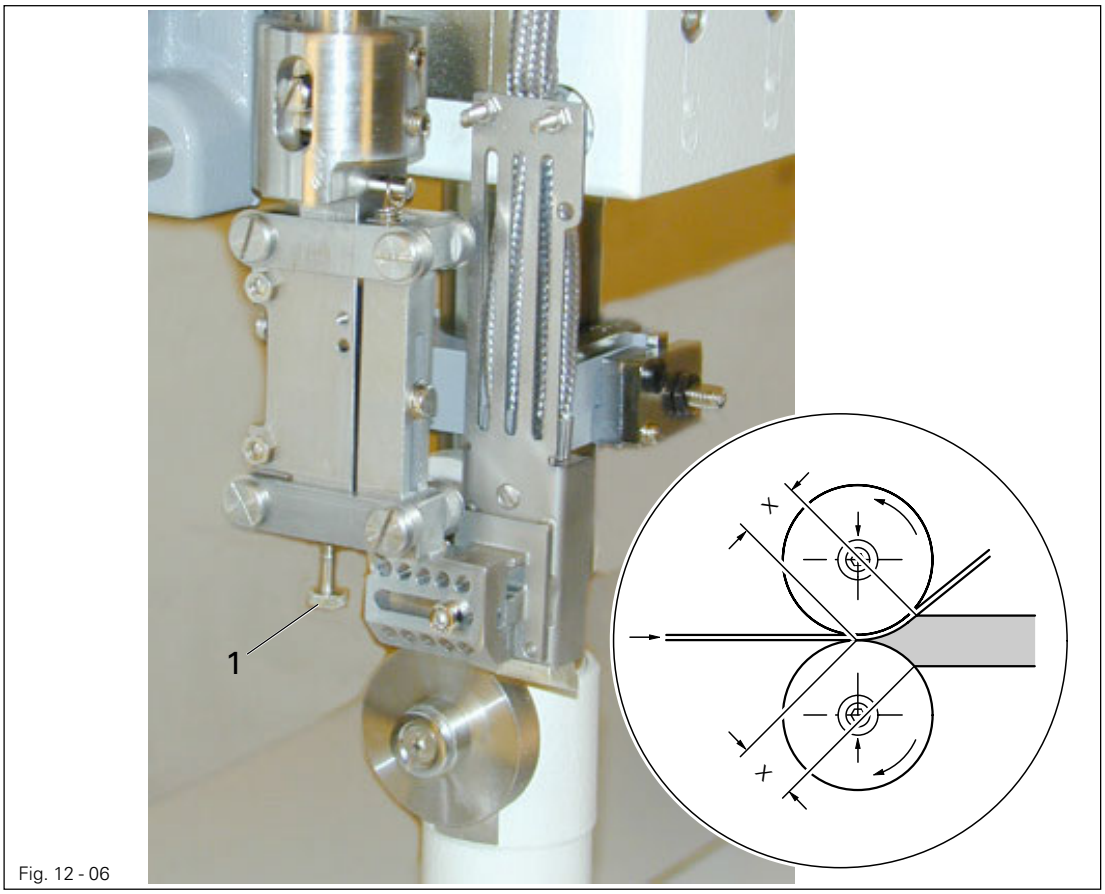

Fig. 12 - 06

- Set heat-sealing temperature at "0".

Allow the hot wedge to cool down!
Danger of burns if the hot wedge is touched!

- Switch the machine on.
- Mount smooth feed rollers.
- Set the operational mode to **Reverse.**
- Insert screw **1** as far as possible.
- Place emery strip (grain 100) between the feed rollers and lower feed roller.

Do not place fingers between the feed rollers!
Danger of crushing if fingers are caught between the running feed rollers!

- Swing hot wedge into position and start the feed rollers.
- Guide the emery strip by hand and work both sides of the hot wedge, until this has been adapted to the shape of the feed rollers, and the measurement "x" is the same at the top and the bottom.
- Check the setting of the hot wedge and adjust it if necessary (see **Chapter 12.04**).

12.05 Change heating cartridge (only on machines with hot-air nozzle)

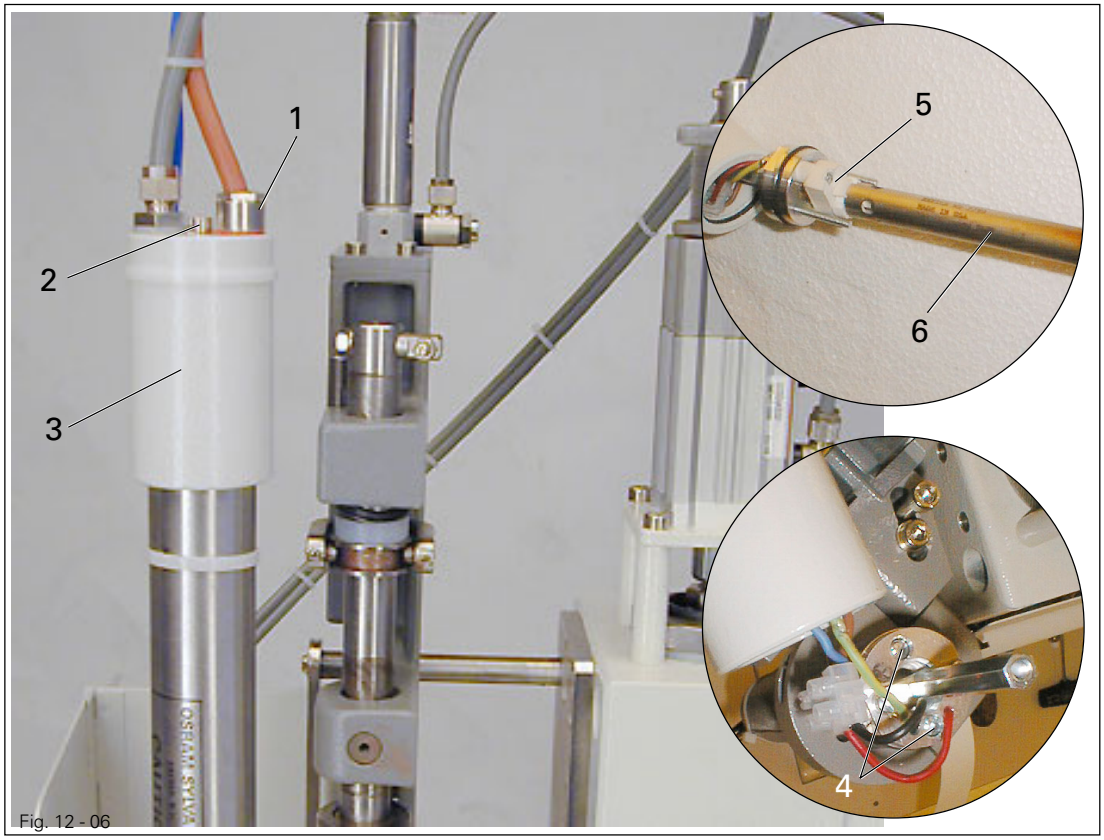

Fig. 12 - 06

Wait until the heating element has cooled down! Danger of burns!

Disconnect the mains plug!

Danger from electric voltage!

- Loosen screw-on cable connection **1**.
- Remove screw **2** and take off cap **3**.
- Loosen screws **4** and pull out holder **5** of heating cartridge **6**.
- Remove heating cartridge **6** from holder **5**.
- Replace in reverse order.

12.06 Change temperature probe (only on machines with hot-air nozzle)

Requirement
The tip of temperature probe **3** must be positioned in the centre of hot-air tube **4.**

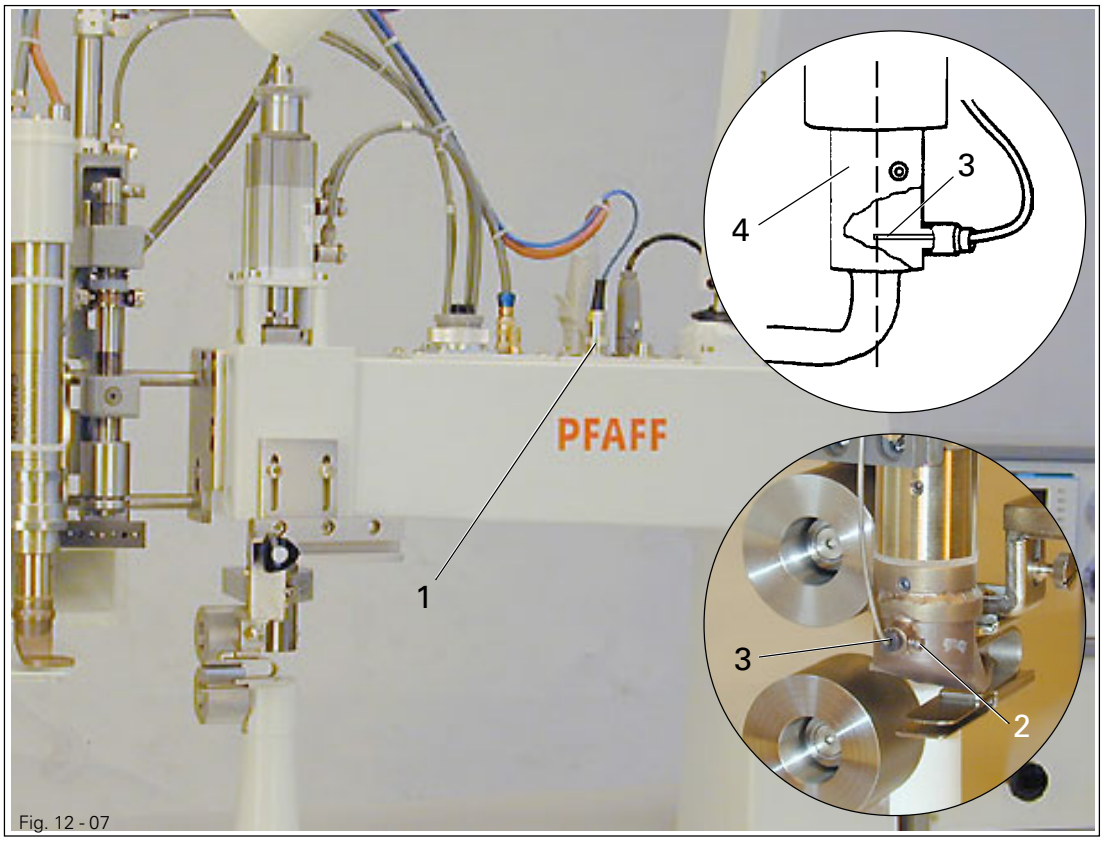

Fig. 12 - 07

Wait until the heating element has cooled down! Danger of burns!

Disconnect the mains plug!

Danger from electric voltage!

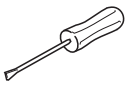

- Pull out plug **1.**
- Loosen screws **2** and withdraw temperature probe **3**.
- Installation in reverse order, observing the **requirement**.

12.07 Drive chains

12.07.01 Tensioning the main drive chains

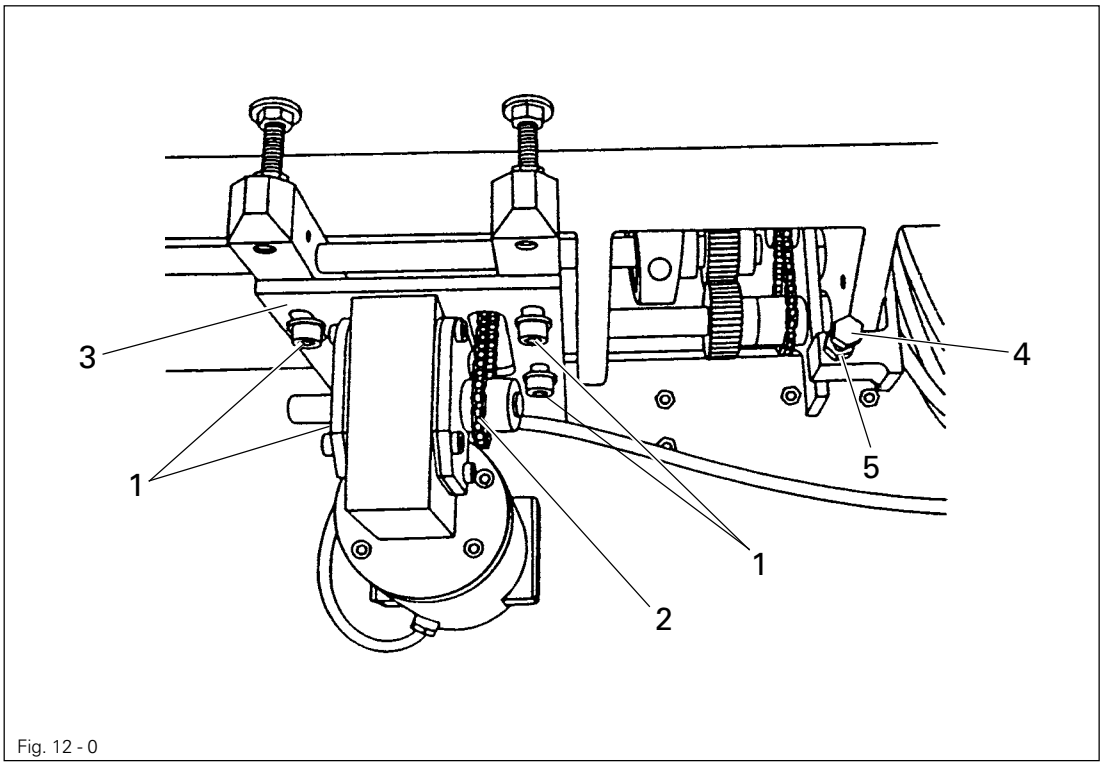

Fig. 12 - 0

Switch off the machine!

- Loosen screws 1.
- Tension bottom drive chain 2 by shifting the mounting plate 3.
- Tension top drive chain with adjusting screw 4 (bolt 5).

12.07.02 Tensioning drive chain in bottom post and to top feed roller



Fig. 12 - 07

Switch off the machine!

- Tension drive chain in post with adjusting screw **1** (nut **2**).
- Tension drive chain of top feed roller with adjusting screw **3** (nut **4**).

12.08 Fuses

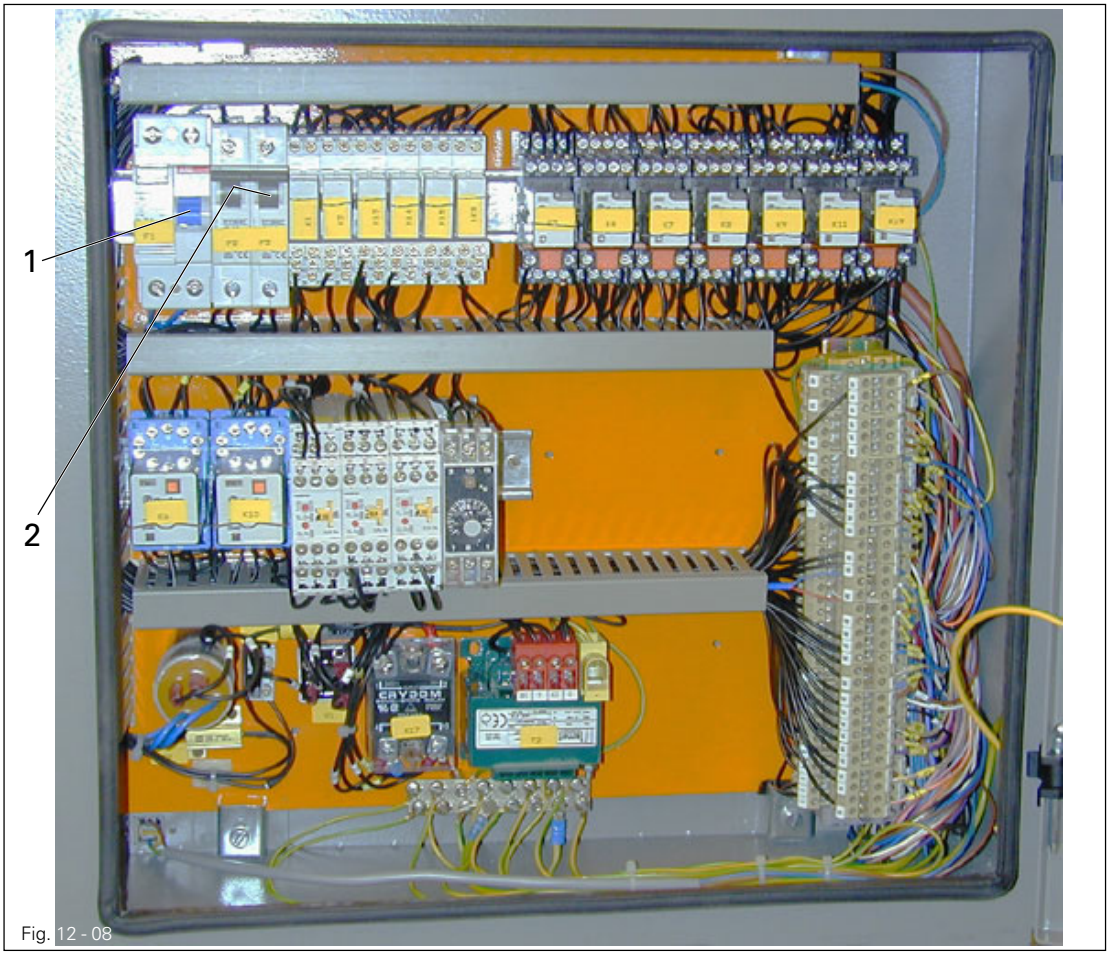

Fig. 12 - 08

The purpose of the fuses is to provide protection against major damage in case of a short-circuit or overload.

Disconnect the mains plug!

Danger from electric voltage!

Before switching the machine on again, first eliminate the cause of the fault!

1 = residual current operated device

2 = main fuse

Reference list for the circuit diagrams

A1	Temperature control device
B1	Temperature sensor
E1	Air heater
E2	Machine lamp
F1	Leakage current circuit breaker
F5	Pressure monitor
H1	Fault signal B1 broken sensor or temperature > 600º C
K1-K3	Pre-selection of operating modes
K4	Restart inhibitor after voltage loss with activated S3
K5	Roller drive start delay
K6, K7	Roller drive M1 preparation for forwards motion
K8, 1K8	Roller drive M1 preparation for reverse motion
K9	Delay between forwards OFF and reverse ON
K10, K11	Roller drive M1 reverse ON
K12	Roller drive M1 reverse OFF
K13, K14	Cut-off by broken sensor or excess temperature fault signal H1
K15	Start lock
K17	Heating current power switch
K22	Tape feed motion operating delay
K23	Tape feed motion motor OFF
M1	Roller drive motor
M2	Extraction device motor (optional)
S1	Mains switch
S2	Pre-selection operating mode
S3	Foot switch
S4	Drive roller raised
X1	Mains plug
Y1	Pneumatics main valve
Y2	Roller lowered – low pressure
Y3	Ventilation off
Y4	Roller lowered – high pressure
Y5	Engage air heater
Y6	Tape knife on
Y7	Tape feed roller off
Z1	Network filter

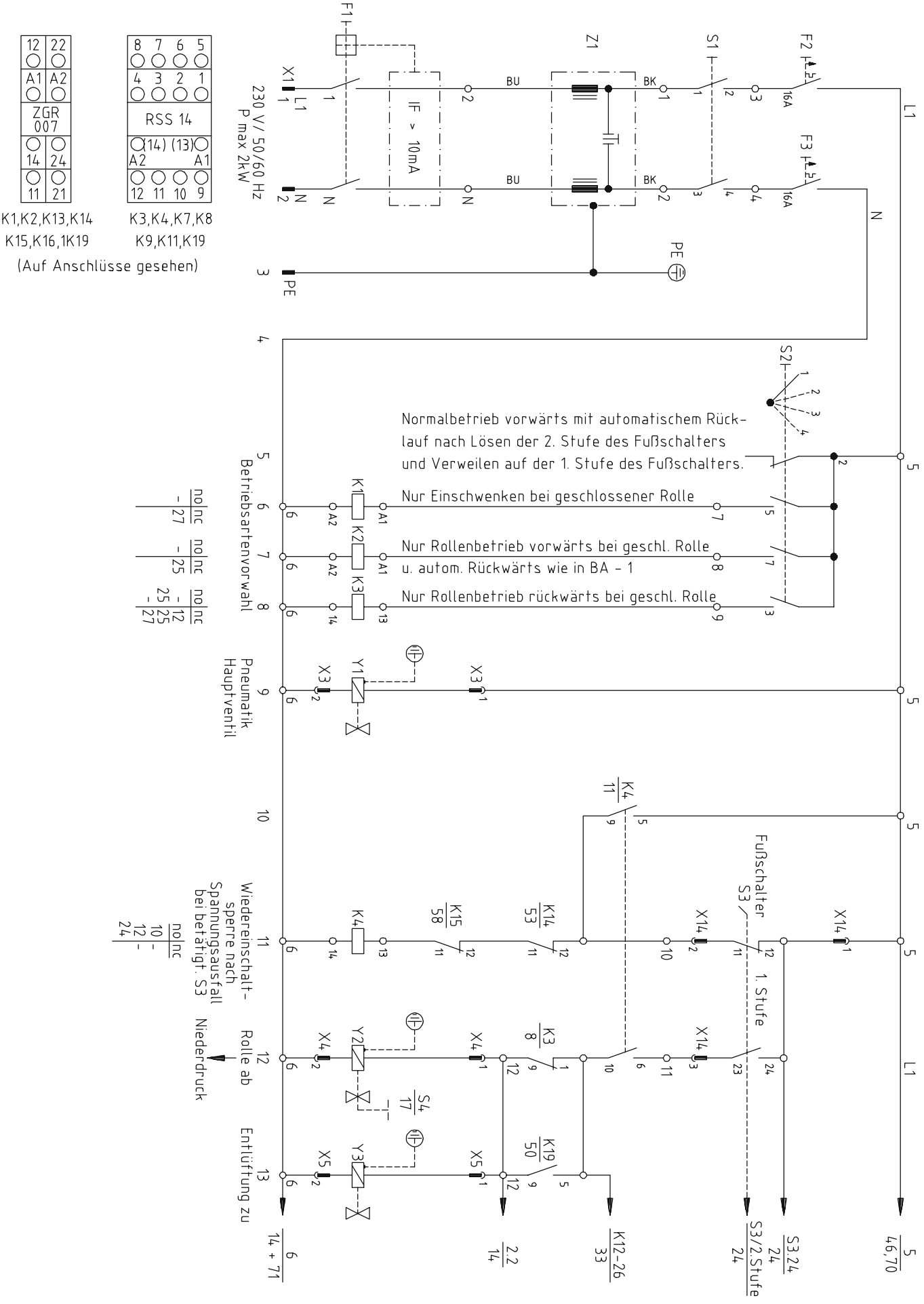
12 22
A1 A2
ZGR 007
14 24
11 21
K1,K2,K13,K14
K15,K16,1K19
8 7 6 5
4 3 2 1
RSS 14
(14) (13)
A2 A1
12 11 10 9
K3,K4,K7,K8
K9,K11,K19
(Auf Anschlüsse gesehen)
F1
X1
L1
N
PE
230 V / 50/60 Hz
P max 2kW
IF > 10mA
Z1
BU
BK
S1
F2
F3
16A
S2
Normalbetrieb vorwärts mit automatischem Rücklauf nach Lösen der 2. Stufe des Fußschalters und Verweilen auf der 1. Stufe des Fußschalters.
Nur Einschwenken bei geschlossener Rolle
Nur Rollenbetrieb vorwärts bei geschl. Rolle u. autom. Rückwärts wie in BA - 1
Nur Rollenbetrieb rückwärts bei geschl. Rolle
Betriebsartenvorwahl
K1
K2
K3
no nc
- 27
- 25
25 - 12
25 25
27 -
Pneumatik Hauptventil
Y1
X3
Wiedereinschaltsperre nach Spannungsausfall bei betätigt. S3
K4
no nc
10 -
12 -
24 -
Fußschalter S3
1. Stufe
K15 58
K14 53
X14
Rolle ab
Niederdruck
Y2
X4
S4 17
K3 8
Entlüftung zu
Y3
X5
K19 50
6 14 + 71
2.2 14
K12-26 33
S3.24 24
S3/2.Stufe 24
5 46,70

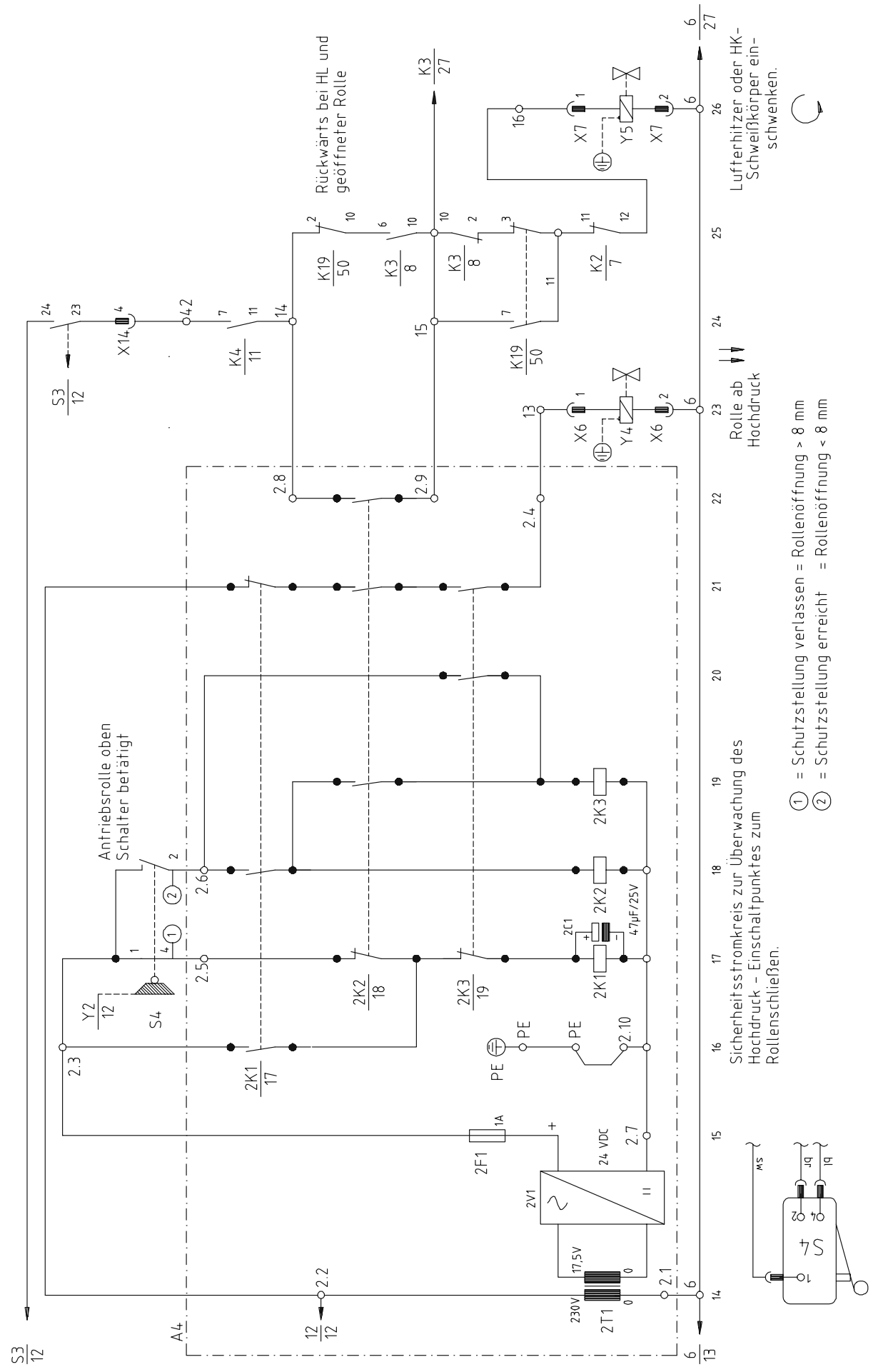
Rückwärts bei HL und geöffneter Rolle
Lufterhitzer oder HK-Schweißkörper einschwenken.
Rolle ab Hochdruck
Antriebsrolle oben Schalter betätigt
Sicherheitsstromkreis zur Überwachung des Hochdruck - Einschaltpunktes zum Rollenschließen.
① = Schutzstellung verlassen = Rollenöffnung > 8 mm
② = Schutzstellung erreicht = Rollenöffnung < 8 mm
S3 12
X14
K4 11
K19 50
K3 8
K2 7
K3 27
X7
Y5
X6
Y4
2.8
2.9
2.4
2.6
2.5
2.3
2.2
2.1
2.7
2.10
2K1 17
2K2 18
2K3 19
2K1
2K2
2K3
2C1
47µF/25V
Y2 12
S4
PE
2F1
1A
24 VDC
2V1
17,5V
230V
2T1
A4
12 12
6 13
6 27
sw
br
bl

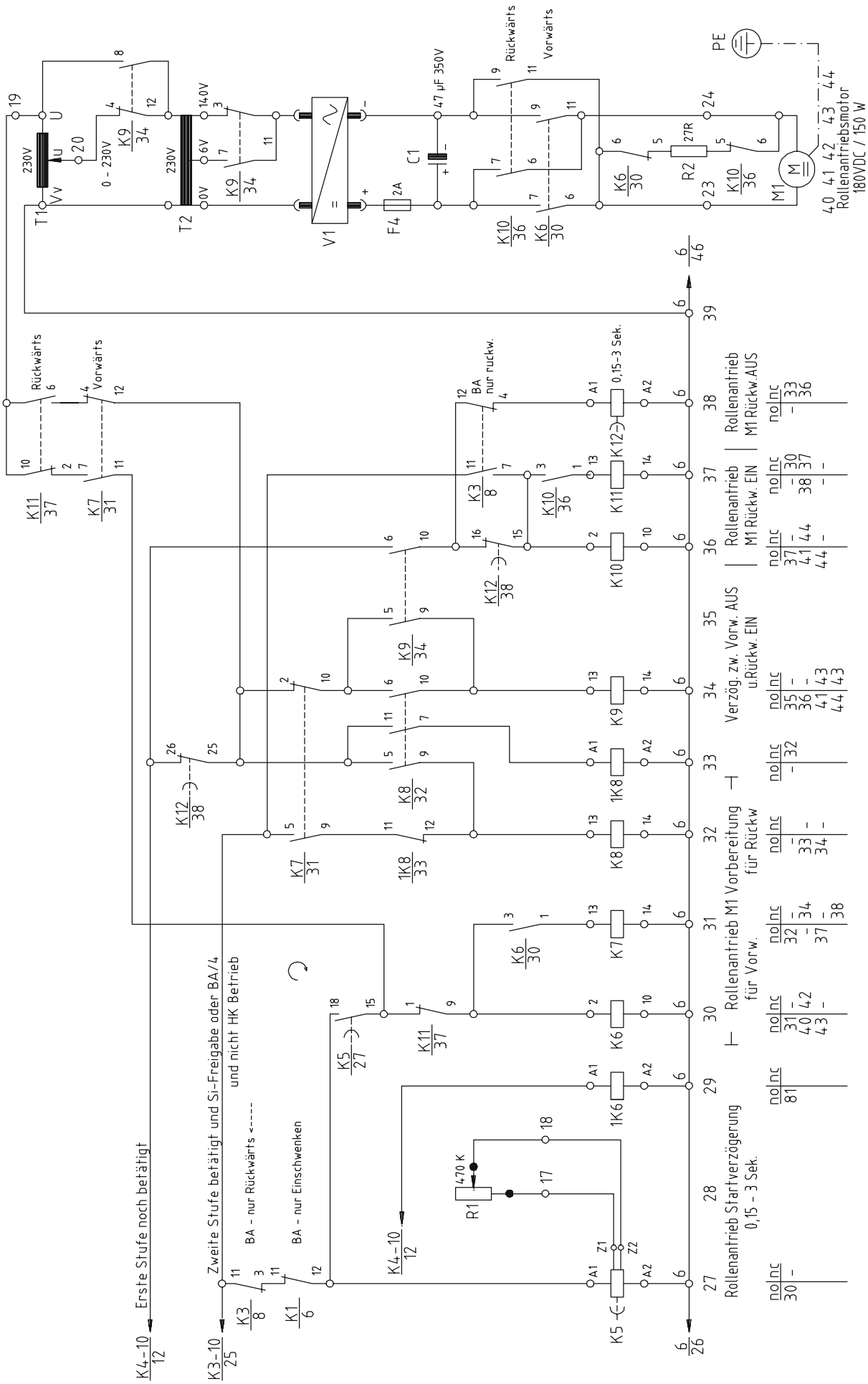
Rollenantriebsmotor
180VDC / 150 W
Rückwärts
Vorwärts
47 µF 350V
0 - 230V
230V
140V
6V
0V
Erste Stufe noch betätigt
Zweite Stufe betätigt und Si-Freigabe oder BA/4
und nicht HK Betrieb
BA - nur Rückwärts <----
BA - nur Einschwenken
BA
nur ruckw.
0,15-3 Sek.
Rollenantrieb Startverzögerung
0,15 - 3 Sek.
Rollenantrieb M1 Vorbereitung
für Vorw.
für Rückw
Verzög. zw. Vorw. AUS
u.Rückw. EIN
Rollenantrieb
M1 Rückw. EIN
Rollenantrieb
M1 Rückw.AUS

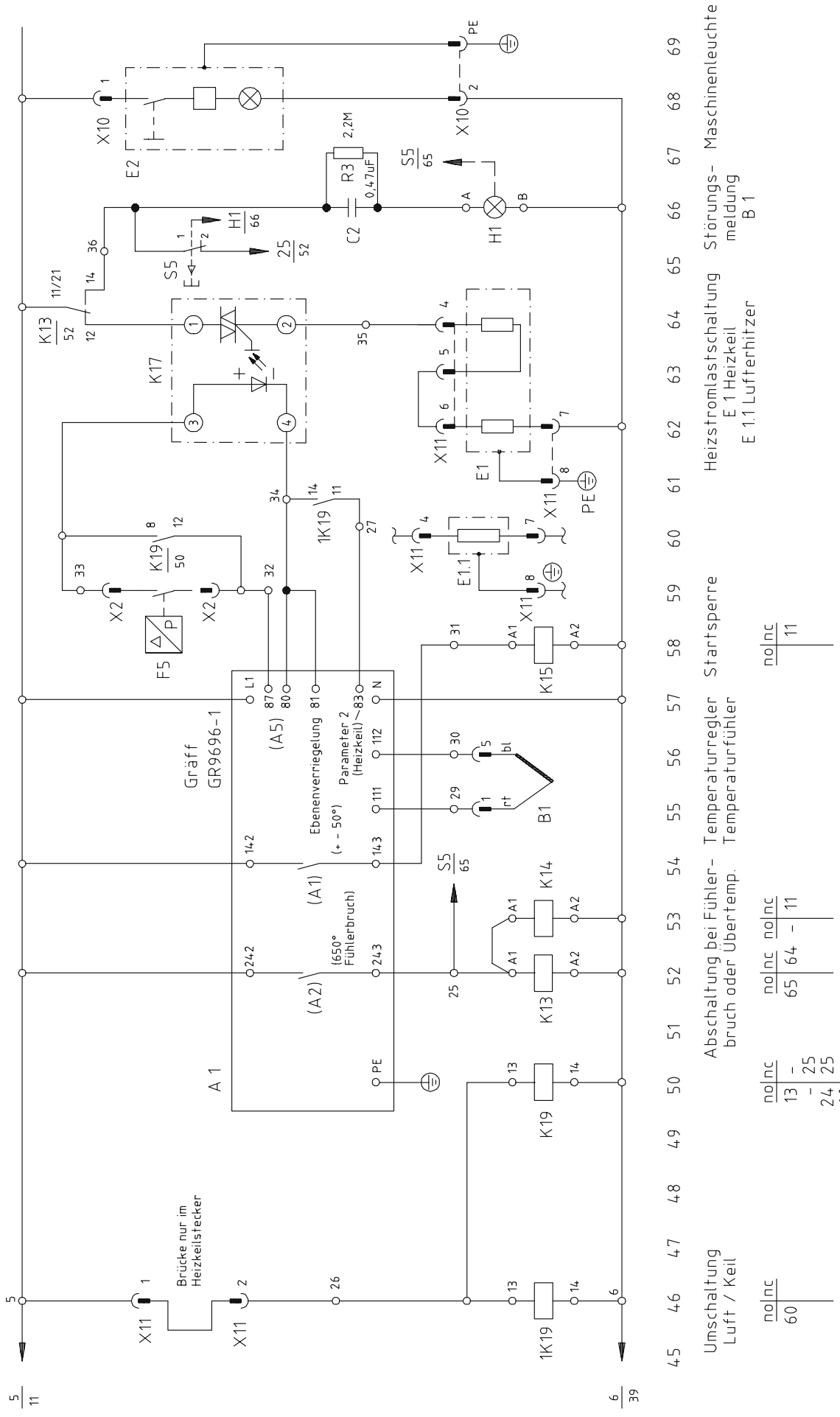
Gräff
GR9696-1
A 1
(A5)
(A1)
(A2)
Ebenenverriegelung
Parameter 2 (Heizkeil)
(+ - 50°)
(650° Fühlerbruch)
Brücke nur im Heizkeilstecker
Heizstromlastschaltung Störungs- Maschinenleuchte
E 1 Heizkeil
E 1.1 Lufterhitzer
B 1
Temperaturregler Startsperre
Temperaturfühler
Abschaltung bei Fühler- Temperaturregler
bruch oder Übertemp. Temperaturfühler
Umschaltung
Luft / Keil

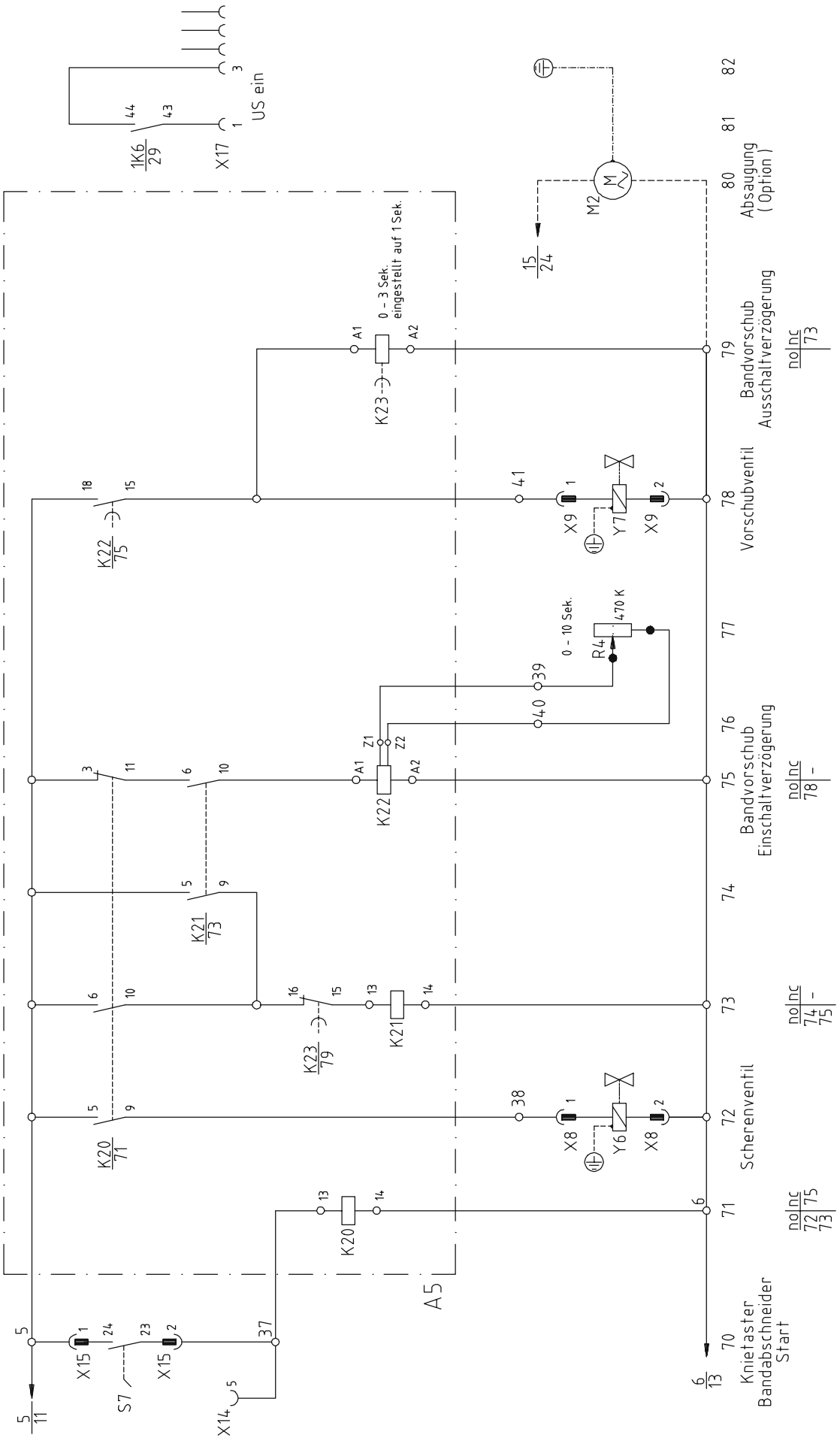
US ein
1K6/29
X17
M2
Absaugung (Option)
15/24
0 - 3 Sek. eingestellt auf 1 Sek.
K23
Bandvorschub Ausschaltverzögerung
no nc 73
K22/75
X9
Y7
Vorschubventil
0 - 10 Sek.
R4
470 K
Bandvorschub Einschaltverzögerung
no nc 78 -
K22
K21/73
K23/79
K21
no nc 74 75 -
K20/71
X8
Y6
Scherenventil
no nc 72 73 75
K20
A5
Knietaster Bandabschneider Start
X15
S7
X14
5/11
6/13

PFAFF® Industrial



Europäische Union
Wachstum durch Innovation – EFRE



PFAFF Industriesysteme
und Maschinen AG

Hans-Geiger-Str. 12 - IG Nord
D-67661 Kaiserslautern

Phone: +49-6301 3205 - 0
Fax: +49-6301 3205 1386
E-mail: info@pfaff-industrial.com

Hotlines:

Technical service:	+49-175/2243-101
Application consultance:	+49-175/2243-102
Spare-parts hotline:	+49-175/2243-103

Printed in Germany

© PFAFF Industriesysteme und Maschinen AG 2009, PFAFF is the exclusive trademark of VSM Group AB.PFAFF Industriesysteme und Maschinen AG is an authorized licensee of the PFAFF trademark.