PFAFF® Industrial

# 8309-023 -026

## INSTRUCTION MANUAL

This instruction manual applies to machines from the following serial numbers onwards:
# 2 624 180 →

296-12-18 571/002
Betriebsanleitung engl. 06.09



This Instruction Manual is valid for all models and subclasses listed in the chapter "Specifications ".

The reprinting, copying or translation of PFAFF Instruction Manuals, whether in whole or in part, is only permitted with our previous authorization and with written reference to the source.

PFAFF Industriesysteme
und Maschinen AG

Hans-Geiger-Str. 12 - IG Nord
D-67661 Kaiserslautern

Contents ..... Chapter - Page


| | | |
|---|---|---|
| 1 | **Safety** | 1 - 1 |
| 1.01 | Directives | 1 - 1 |
| 1.02 | General notes on safety | 1 - 1 |
| 1.03 | Safety symbols | 1 - 2 |
| 1.04 | Important notes for the user | 1 - 2 |
| 1.05 | Operating and technical staff | 1 - 3 |
| 1.05.01 | Operating staff | 1 - 3 |
| 1.05.02 | Technical staff | 1 - 3 |
| 1.06 | Danger warnings | 1 - 4 |
| 2 | **Proper use** | 2 - 1 |
| 3 | **Specifications** | 3 - 1 |
| 4 | **Machine disposal** | 4 - 1 |
| 5 | **Transportation, packing and storage** | 5 - 1 |
| 5.01 | Transportation to customer's premises | 5 - 1 |
| 5.02 | Transportation inside customer's premises | 5 - 1 |
| 5.03 | Disposal of packing materials | 5 - 1 |
| 5.04 | Storage | 5 - 1 |
| 6 | **Explanation of symbols** | 6 - 1 |
| 7 | **Controls** | 7 - 1 |
| 7.01 | On-off switch | 7 - 1 |
| 7.02 | Air valve | 7 - 1 |
| 7.03 | Foot switch for raising / lowering the feed rollers | 7 - 2 |
| 7.04 | Foot switch for starting the feed rollers | 7 - 2 |
| 7.05 | Foot switch for engaging and disengaging the heating element | 7 - 3 |
| 7.06 | Knee switch / foot switch for mobile drive (only for the PFAFF 8309-026) | 7 - 3 |
| 7.07 | Temperature regulator | 7 - 4 |
| 7.08 | Status display of temperature control | 7 - 4 |
| 7.09 | Regulator for the heat-sealing speeds | 7 - 5 |
| 7.10 | Reset switch / horn | 7 - 5 |
| 7.11 | Switch for heating capacity (only for machines with hot wedge) | 7 - 6 |
| 7.12 | Switch for the operating direction | 7 - 6 |
| 7.13 | Switch for the mobile machine drive ( only for PFAFF 8309-026 ) | 7 - 7 |
| 7.14 | Switch for the automatic operation of the heating element | 7 - 7 |
| 7.15 | Adjusting screw for limiting the penetration depth | 7 - 8 |
| 7.16 | Regulator for the feed roller pressure and the hot air pressure | 7 - 8 |
| 8 | **Installation and commissioning** | 8 - 1 |
| 8.01 | Installation | 8 - 1 |
| 8.02 | Commissioning | 8 - 2 |
| 8.03 | Switching the machine on / off | 8 - 2 |
| 8.03.01 | Switching machine with hot wedge on / off | 8 - 2 |
| 8.03.02 | Switching machine with hot-air nozzle on / off | 8 - 3 |

Contents ..... Chapter - Page


| | | |
|---|---|---|
| 9 | Setting up | 9 - 1 |
| 9.01 | Adjusting the hot wedge (only for machines with hot wedge) | 9 - 1 |
| 9.01.01 | Lateral and angle positioning of the hot wedge | 9 - 1 |
| 9.01.02 | Setting the height of the hot wedge | 9 - 2 |
| 9.01.03 | Clearance and pressure of the hot wedge on the feed rollers | 9 - 3 |
| 9.02 | Setting the hot-air nozzle (only for machines with hot-air nozzle) | 9 - 4 |
| 9.02.01 | Lateral and angle positioning of the hot-air nozzle | 9 - 4 |
| 9.02.02 | Setting the height of the hot-air nozzle | 9 - 5 |
| 9.02.03 | Distance of the hot-air nozzle to the feed rollers | 9 - 6 |
| 9.03 | Setting the penetration depth | 9 - 7 |
| 9.04 | Switching the automatic heating element on / off | 9 - 7 |
| 9.05 | Setting the heat-sealing temperature and speed | 9 - 7 |
| 9.06 | Setting the hot air pressure and heat-sealing pressure | 9 - 8 |
| 10 | Heat sealing | 10 - 1 |
| 10.01 | Heat-sealing principle | 10 - 1 |
| 10.02 | Heat-sealing procedure | 10 - 2 |
| 10.02.01 | Heat-sealing without automatic heating element | 10 - 2 |
| 10.02.02 | Heat-sealing with automatic heating element | 10 - 2 |
| 11 | Care and maintenance | 11 - 1 |
| 11.01 | Maintenance table | 11 - 1 |
| 11.02 | Cleaning | 11 - 1 |
| 11.02.01 | Machines with hot wedge | 11 - 1 |
| 11.02.02 | Machines with hot air nozzle | 11 - 1 |
| 11.03 | Checking / setting air pressure | 11 - 2 |
| 11.04 | Emptying/cleaning water container of the air filter / regulator | 11 - 2 |
| 11.05 | Checking fuses | 11 - 3 |
| 11.06 | Drive chains | 11 - 4 |
| 11.06.01 | Tightening drive chains | 11 - 4 |
| 11.06.02 | Greasing drive chains | 11 - 5 |
| 11.07 | Cleaning filter for finest particles (only for machines with hot-air nozzle) | 11 - 5 |
| 11.08 | Changing top feed roller | 11 - 6 |
| 11.09 | Changing bottom feed roller | 11 - 6 |
| 11.10 | Changing heating cartridge (only for machines with hot-air nozzle) | 11 - 7 |
| 11.11 | Changing temperature sensor | 11 - 8 |
| 11.12 | Changing hot wedge (only for machines with hot wedge) | 11 - 9 |
| 11.13 | Changing the hot-air nozzle (only for machines with hot-air nozzle) | 11 - 9 |
| 11.14 | Grinding in the hot wedge (only for machines with hot wedge) | 11 - 10 |
| 11.15 | Adjusting safety coupling (only for PFAFF 8309-026) | 11 - 11 |
| 11.16 | Adjusting brake (only for PFAFF 8309-026) | 11 - 11 |
| 12 | Circuit diagrams | 12 - 1 |

# 1 Safety

## 1.01 Directives

This machine is constructed in accordance with the European regulations indicated in the conformity and manufacturer's declarations.
In addition to this instruction manual, please also observe all generally accepted, statutory and other legal requirements, including those of the user's country, and the applicable pollution control regulations! The valid regulations of the regional social insurance society for occupational accidents or other supervisory authorities are to be strictly adhered to!

## 1.02 General notes on safety

- The machine must only be operated by adequately trained operators and only when the instruction manual has been fully read and understood!
- All notices on safety and the instruction manual of the motor manufacturer are to be read before the machine is put into operation!
- All notes on the machine concerning danger and safety must be observed!
- The machine must be used for the purpose for which it is intended and must not be operated without its safety devices; all regulations relevant to safety must be adhered to.
- When changing the feed rollers, the hot wedge or the hot-air nozzle, when the workplace is left unattended and during maintenance or repair work, the machine must be switched off at the mains and protective measures taken to prevent it being switched on again!
- Daily maintenance work must only be carried out by appropriately trained persons!
- Repairs and special maintenance work must only be carried out by qualified technical staff or persons with appropriate training!
- During maintenance or repairs on the pneumatic system the machine must be disconnected from the compressed air supply! The only exception to this is when adjustments or function checks are carried out by appropriately trained technical staff!
- Work on the electrical equipment must only be carried out by technical staff who are qualified to do so!
- Work on parts or equipment connected to the power supply is not permitted! The only exceptions to this are specified in regulations EN 50110.
- Conversion or modification of the machine must only be carried out under observation of all relevant safety regulations!
- Only spare parts which have been approved by us are to be used for repairs! We draw special attention to the fact that spare parts and accessories not supplied by us have not been subjected to testing nor approval by us. Fitting and/or use of any such parts may cause negative changes to the design characteristics of the machine. We shall not accept any liability for damage caused by the use of non-original parts.

## 1.03 Safety symbols



Danger!
Special points to observe.



Danger of hands being crushed!



Danger of burns from hot surface!



Danger from electric voltage!

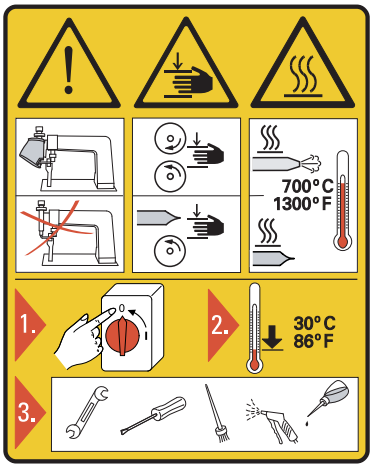


### Caution

Do not operate without finger guard and safety devices. Turn off the main switch and let the machine cool down before any setting up, maintenance or cleaning work!

## 1.04 Important notes for the user

- This instruction manual belongs to the equipment of the machine and must be available to the operating staff at all times.
  This instruction manual must be read before the machine is operated for the first time.
- Both operating and technical staff must be instructed on the safety devices of the machine and on safe working methods.
- It is the duty of the user to operate the machine in perfect running order only.
- The user must ensure that none of the safety devices are removed nor put out of working order.
- The user must ensure that only authorized persons operate and work on the machine.
- If the maximum limit for the emission of hazardous fumes is exceeded during processing PVC, PTFE and similar materials, the user must have an efficient extraction system installed.
- The user must make sure there is no high-frequency welding equipment being operated in direct proximity to the machine that exceeds the EMC limit values according to EN 60204-31 for the machine.

For further information please refer to your PFAFF agency.

## 1.05 Operating and technical staff

### 1.05.01 Operating staff

Operating staff are the persons responsible for setting up, operating and cleaning the machine and for removing any disturbances in the sewing area.

The operating staff is obliged to observe the following points, and must:

- always observe the notes on safety in this instruction manual!
- avoid using any working methods which adversely affect the safety of the machine!
- avoid wearing loose-fitting clothing or jewelry such as necklaces or rings!
- also ensure that only authorized persons are allowed near the danger area of the machine!
- immediately report to the user any changes to the machine that may affect its safety!

### 1.05.02 Technical staff

Technical staff are persons who have been trained in electrical engineering, electronics and mechanical engineering. They are responsible for lubricating, servicing and repairing the machine.

The technical staff is obliged to observe the following points, and must:

- always observe the notes on safety in this instruction manual!
- switch off the on/off switch before carrying out any maintenance and repair work on the machine!
- never work on parts or equipment still connected to the power supply! Exceptions to this are only permissible according to regulations EN 50110.
- replace all safety covers after maintenance and repair work!

## 1.06 Danger warnings

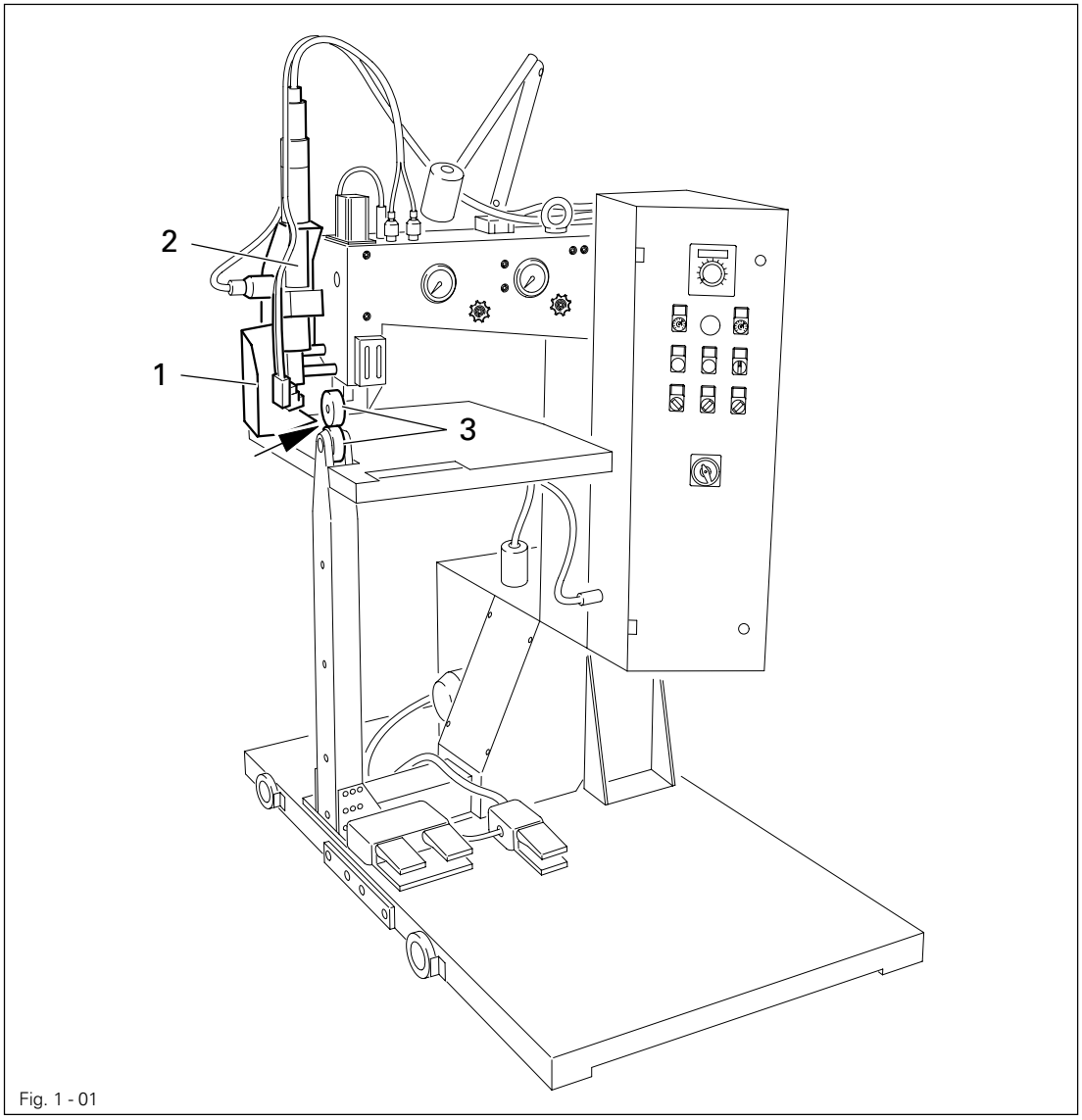


Fig. 1 - 01



Do not operate the machine without protective cover **1**!
Danger of burns if the hot-air nozzle or the hot wedge are touched!



Do not put your hand between protective cover **1** and swivel unit (see arrow)!
Danger of crushing when the swivel unit **2** is engaged or disengaged!



Do not touch moving feed rollers **3**!
Danger of fingers being crushed!



For the **PFAFF 8309-026** the space between the tracks must be even!
Provide barriers for persons in the track area!
Danger of crushing by the moving machine!

## 2 Proper use

The PFAFF 8309-023 is a stationary heat-sealing appliance with a self-drive mechanism for the sealing process and is equipped with a hot-air nozzle or hot wedge.
The PFAFF 8309-026 is a mobile heat-sealing appliance with a self-drive mechanism for the sealing process and is equipped with a hot-air nozzle or hot wedge.
Both machines are used for sealing technical textiles and sheets of suitable plastics (flexible thermoplastics).



Any use of these machines which is not approved by the manufacturer shall be considered as improper use! The manufacturer shall not be liable for any damage arising out of improper use! Proper use shall also be considered to include compliance with the operation, adjustment, service and repair measures specified by the manufacturer!

## 3 Specifications ▲

Length:
PFAFF 8309-023 ..... 900 mm
PFAFF 8309-026 ..... 1510 mm

Width: ..... 1260 mm
Height: ..... 1600 mm

Weight:
PFAFF 8309-023 ..... approximately 385 kg
PFAFF 8309-026 ..... approximately 425 kg

Power consumption:
Machine with hot-air nozzle: ..... max. 3500 W
Machine with hot wedge: ..... max.1500 W

Heating capacity:
Machine with hot-air nozzle: ..... 1900 ( 3000 ) W
Machine with hot wedge: ..... 500 ( 1000 ) W

Mains fuse: ..... 16 A, inert
Power supply: ..... 230 V / 50 Hz

Sealing temperature:
Machine with hot-air nozzle: ..... max. 610 °C
Machine with hot wedge: ..... max. 450 °C

Sealing speed: ..... max. 10 m/min.
Pressure of sealing roller: ..... max. 500 N
Diameter of sealing roller: ..... 65.1 mm
Seam width: ..... 15, 20, 30, 40 mm
Hem width: ..... 60, 80, 100, 120 mm

Clearance width (to edge of feed roller) ..... approximately 560 mm

Air consumption:
Machine with hot-air nozzle: ..... approximately 250 l/h
Machine with hot wedge: ..... approximately 40 l/h

▲ Subject to technical alterations

# 4 Disposal of machine

- Proper disposal of the machine is the responsibility of the customer.
- The materials used for the machine are steel, aluminium, brass and various plastic materials.
  The electrical equipment consists of plastic materials and copper.
- The machine is to be disposed of according to the locally valid pollution control regulations.



Care must be taken that parts soiled with lubricants are disposed of separately according to the locally valid pollution control regulations!

# 5 Transportation, packing and storage

## 5.01 Transportation to the customer's premises

Within the Federal Republic of Germany the machine is delivered without packing.
Machines intended for export are packed.

## 5.02 Transportation inside the customer's premises

The manufacturer cannot be made liable for transportation inside the customer's premises nor to other operating locations.



Only for the PFAFF 8309-026
During transportation take care to avoid damage to the drive pinion!
Apply transit support, see Chapter 8.01 Installation.

## 5.03 Disposal of packing materials

The packing materials of these machines consist of paper, cardboard, VDE fibre and wood.
Proper disposal of the packing materials is the responsibility of the customer.

## 5.04 Storage

If the machine is not in use, it can be stored for up to 6 months. It should be protected against dust and moisture.
If the machine is stored for longer periods, the individual parts, especially the surfaces of moving parts, must be protected against corrosion, e.g. by a film of oil.

## 6 Explanation of symbols

In this instruction manual, work to be carried out or important information is accentuated by symbols. These symbols have the following meanings:



Note, information



Cleaning, care



Lubrication

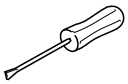

Maintenance, repairs, adjustment, service work
(only to be carried out by technical staff)

# 7 Controls

## 7.01 On-off switch

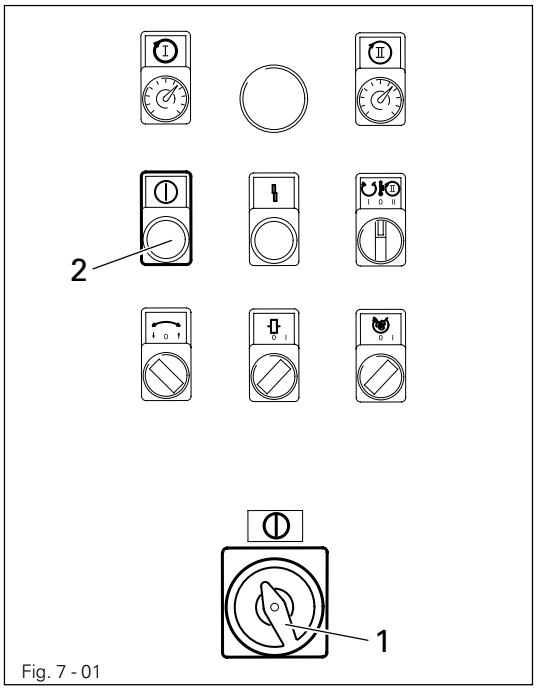

Fig. 7 - 01

- By turning the on/off **1** switch the machine is switched on or off.

  Position **0**: Machine is switched off

  Position **I**: Machine is switched on

When switching the machine off, please observe the notes in **Chapter 8.03 Switching the machine on / off**!

When the machine is switched on, lamp **2** lights up.

## 7.02 Air valve

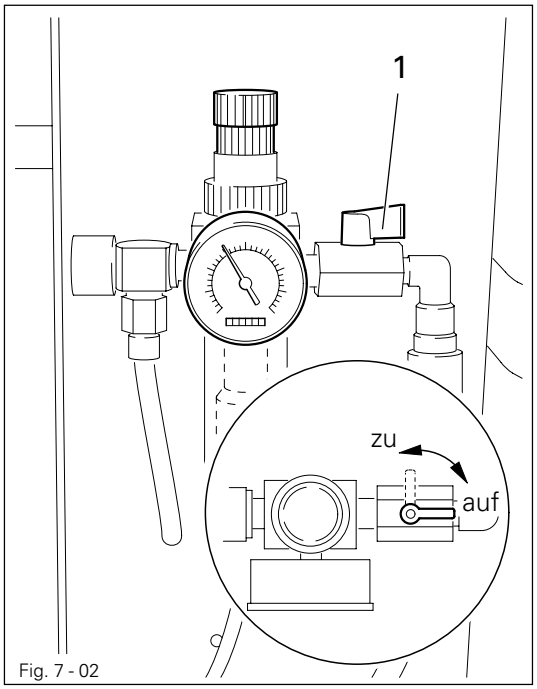

Fig. 7 - 02

- The compressed air supply is shut off or opened by turning air valve **1**.

Before shutting off the air supply, please observe the notes in **Chapter 8.03 Switching the machine on / off**!

## 7.03 Foot switch for raising / lowering the feed rollers

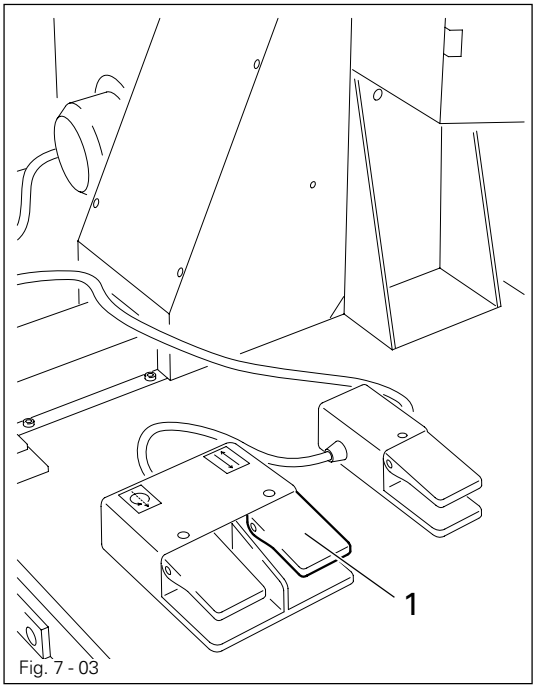

Fig. 7 - 03

- When the foot switch **1** is pressed down, the top feed roller is raised until the foot switch is released again.

## 7.04 Foot switch for starting the feed rollers

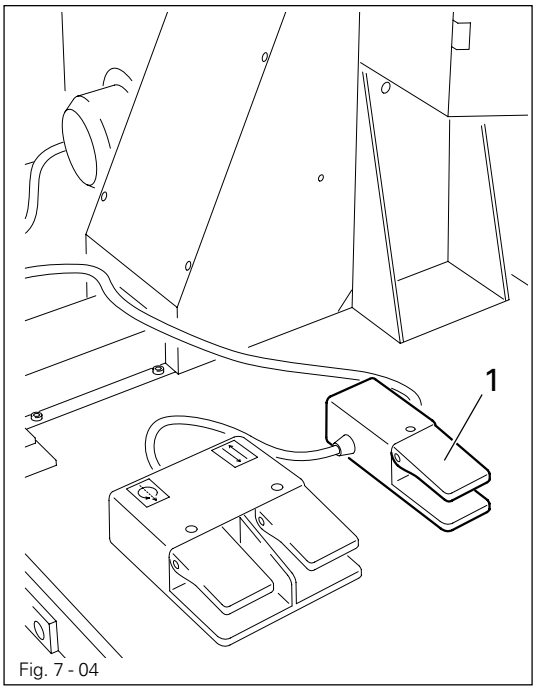

Fig. 7 - 04

- After pressing down the two-stage foot switch **1**, the feed rollers are started.

Stage **1**: sealing speed 1
Stage **2**: sealing speed 2

- The feed rollers remain in operation as long as the foot switch **1** is pressed down.

Depending on the pre-setting, the heating element is automatically swung into position when the feed rollers are started. See **Chapter 7.14 Switch for automatic operation of the heating element**.

For setting the sealing speed, see **Chapter 7.09 Regulator for sealing speed**.

## 7.05 Foot switch for engaging and disengaging the heating element

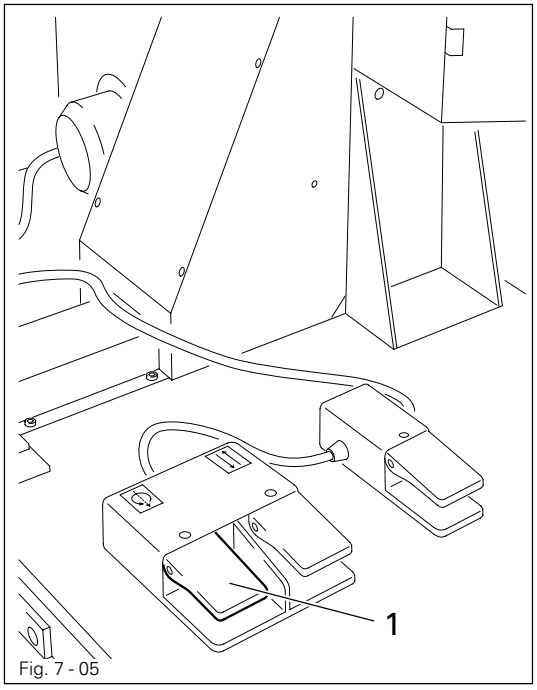

Fig. 7 - 05

- The heating element can be engaged or disengaged by pressing down foot switch **1**.

The function of the foot switch **1** is dependent on the selected pre-setting, see **Chapter 7.14 Switch for automatic operation of the heating element**.

## 7.06 Knee switch / foot switch for mobile drive (only for the PFAFF 8309-026)

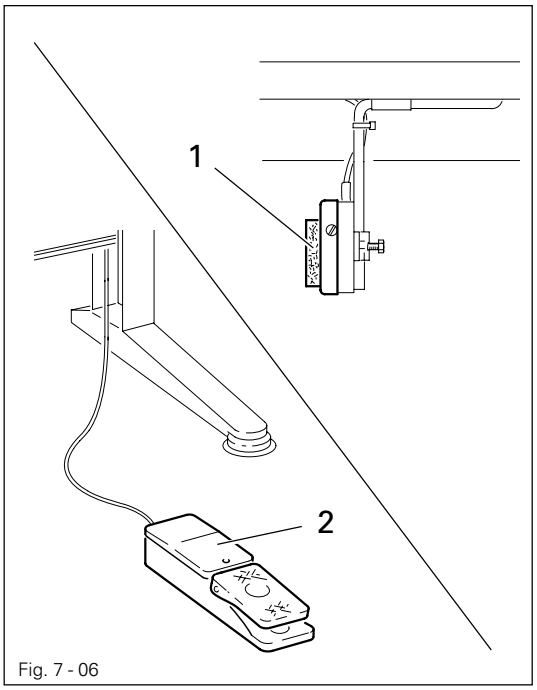

Fig. 7 - 06

- When the knee switch **1** is operated, the mobile machine unit stops, while the feed rollers continue to move.

As an alternative to the knee switch **1**, the foot switch **2** can be delivered with the same function (e.g. for machines without a table).

## 7.07 Temperature regulator

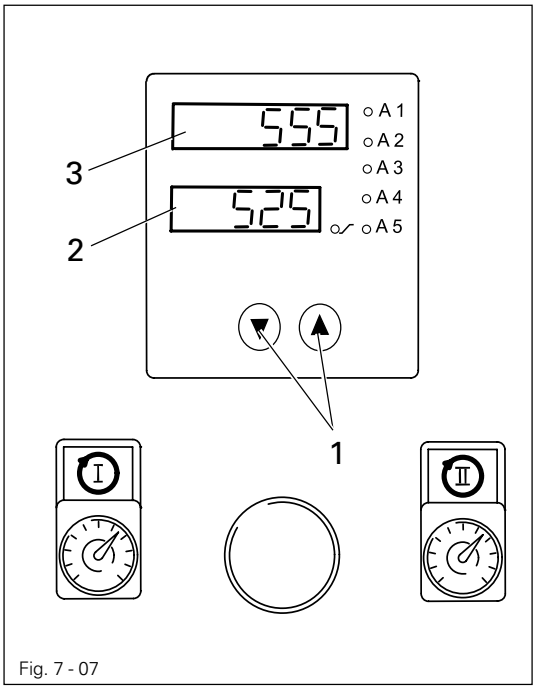


Fig. 7 - 07

- The temperature can be set with the buttons **1**.
- Display **2** shows the required value and display **3** the actual value.

## 7.08 Status display of temperature control

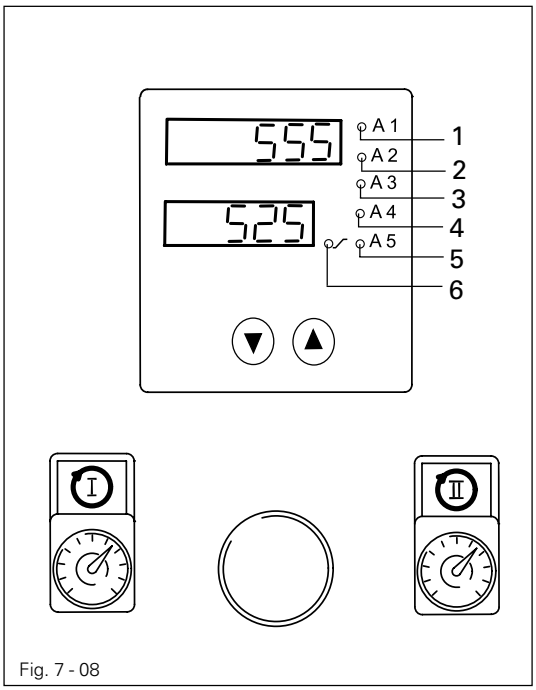


Fig. 7 - 08

- Depending on the status of the temperature control, diodes **1 - 6** light up.

**Diode 1** lights up when the actual temperature deviates from the required temperature by +/-50°C.

**Diode 2** lights up, if the temperature exceeds 650°C, or if the sensor breaks.

**Diode 3** - no function

**Diode 4** - no function

**Diode 5** lights up as soon as the heating is switched on.

**Diode 6** lights up when the machine is heated.

## 7.09 Regulator for the heat-sealing speeds

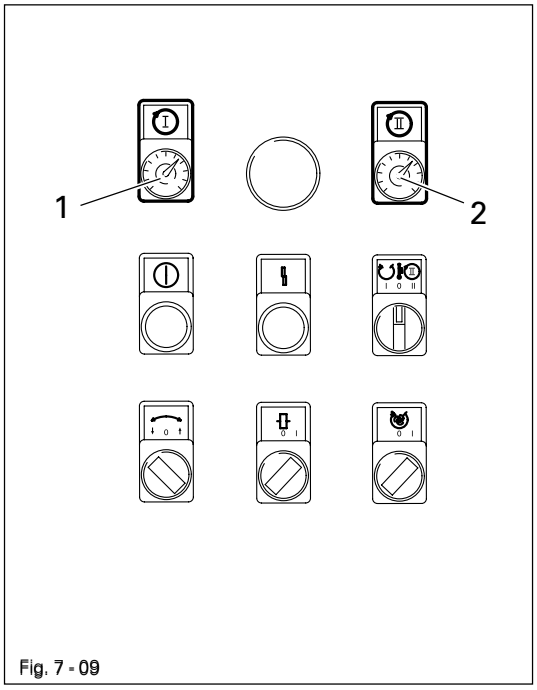


Fig. 7 - 09

- By turning regulator **1** the first speed level of the heat-sealing equipment is set.
- By turning regulator **2** the second speed level of the heat-sealing equipment is set.

The heat-sealing speeds can be set as required within the range **0 - 10 m/min**.

## 7.10 Reset switch / horn

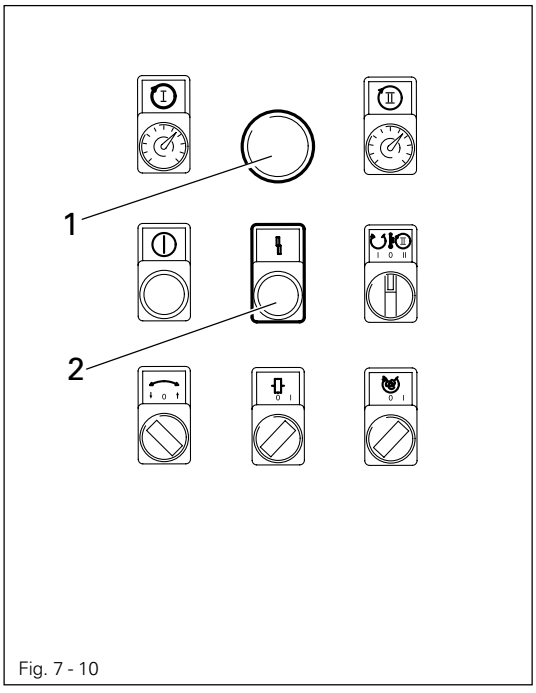


Fig. 7 - 10

If one of the following malfunctions occurs, the horn **1** sends out a signal and the lamp in the reset button **2** lights up:

- Malfunction of the temperature sensor (e.g. sensor has broken)
- Over-heating of the hot wedge or of the heating cartridge
- The difference between the selected and the actual temperature is greater than 60°C (heat-welding temperature is not reached)

When a malfunction occurs:

- correct the malfunction.
- quit the malfunction signal by pressing the reset button **2** (lamp goes off).

## 7.11 Switch for heating capacity (only for machines with hot wedge)

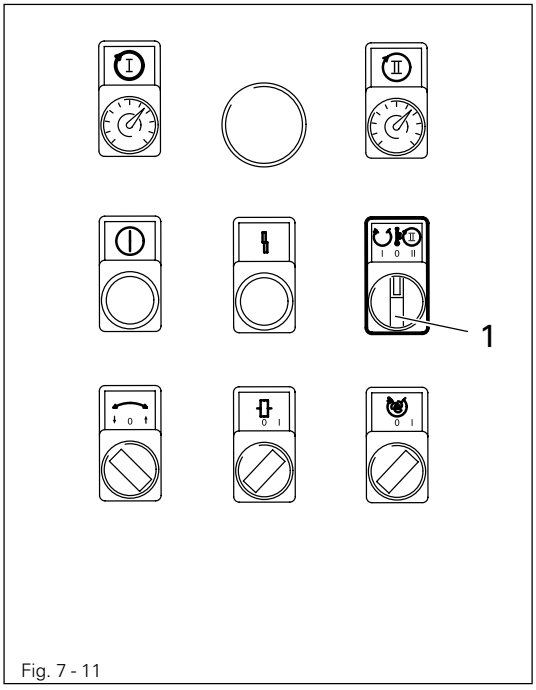


Fig. 7 - 11

- By turning the switch **1** the heating capacity can be set at three levels.

Level 0: **Reduced heating capacity** in the entire working area

Level I: **Standard operation**
Reduced heating capacity when the hot wedge is disengaged, full heating capacity when the hot wedge is engaged.

Level II: **Speed-controlled heating capacity**
At the first heat-sealing speed level, the heating capacity is reduced. When the machine is switched over to the second speed level, the full heating capacity is in operation.

## 7.12 Switch for the operating direction

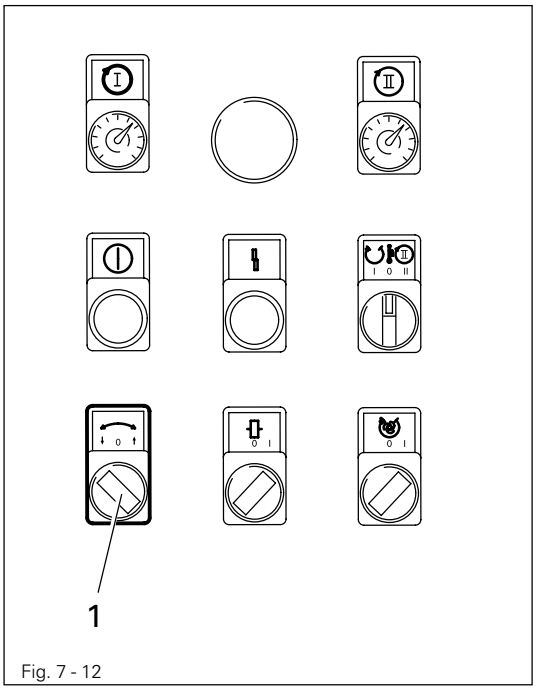


Fig. 7 - 12

- By turning the switch **1**, you can select the direction of the feed rollers.

Switch **1** lights up when set at "reverse".

## 7.13 Switch for the mobile machine drive ( only for PFAFF 8309-026 )

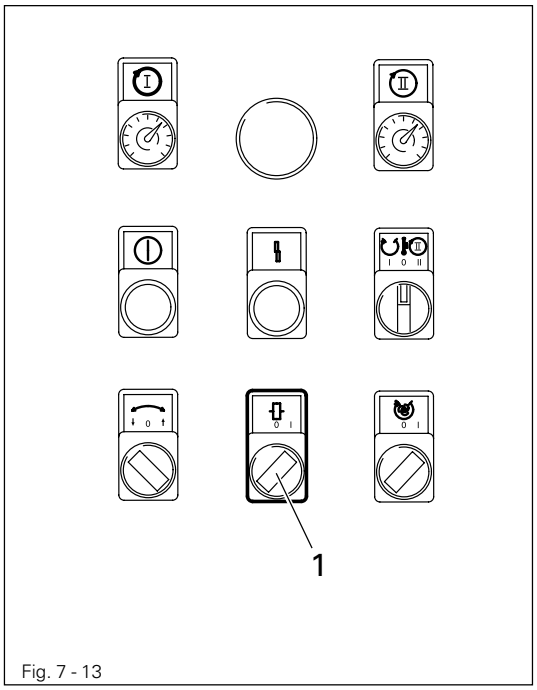


Fig. 7 - 13

- By turning the switch **1**, you can switch the mobile machine drive on or off.

When the mobile machine drive is switched on, switch **1** lights up.

## 7.14 Switch for the automatic operation of the heating element

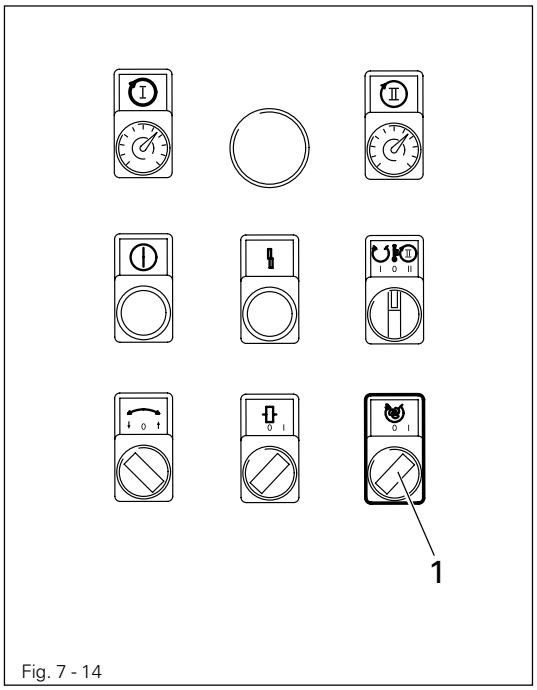


Fig. 7 - 14

- By turning switch **1**, the automatic operation of the heating element can be switched on or off.

Position 0: **Automatic operation off**
The heating element is swung into and out of position with the use of the foot switch, see **Chapter 7.05 Foot switch for engaging and disengaging the heating element**.

Position 1: **Automatic operation on**
The heating element is engaged automatically when the feed rollers start, and can be disengaged at any time during operation by operating the foot switch, see **Chapter 7.05 Foot switch for engaging and disengaging the heating element**.

## 7.15 Adjusting screw for limiting the penetration depth

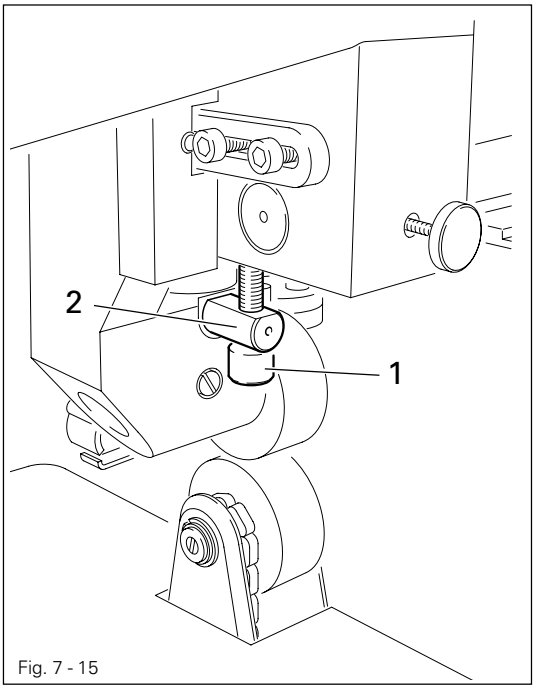

Fig. 7 - 15

Do not raise or lower the feed rollers during adjustment! Danger of crushing between screw **1** and stop **2**!

- By turning the screw **1**, you can adjust the distance between the lowered feed rollers (limiting the penetration depth).

## 7.16 Regulator for the feed roller pressure and the hot air pressure

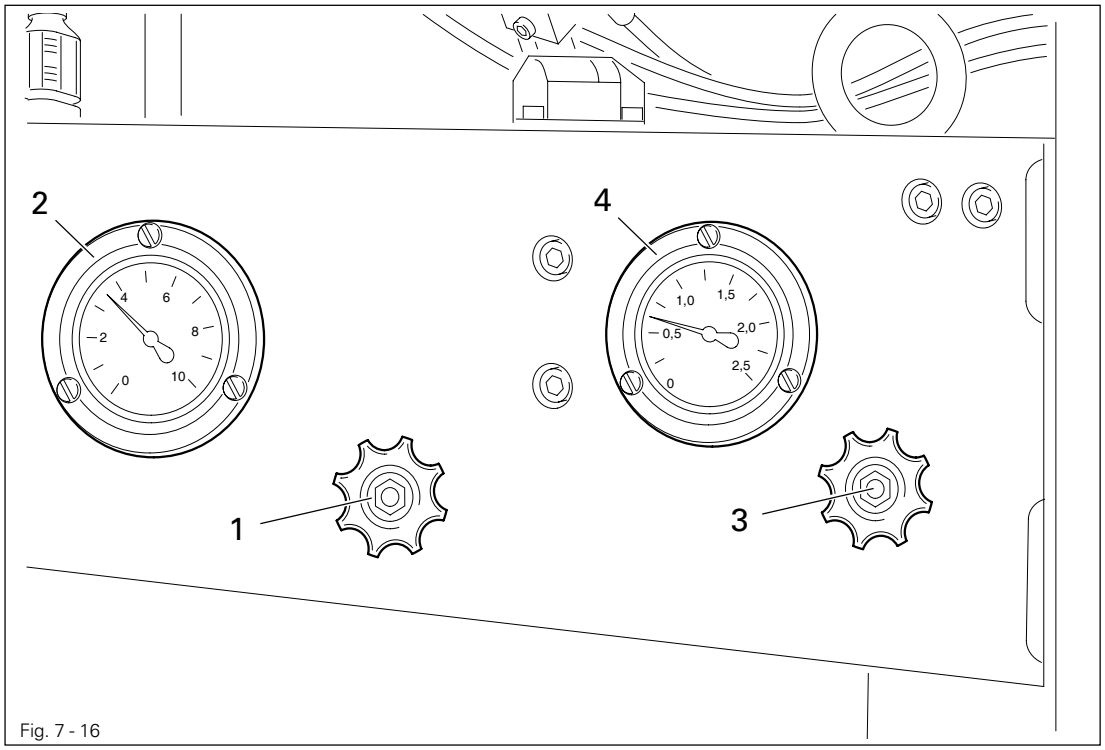

Fig. 7 - 16

- By turning the hand wheel **1**, you can adjust the feed roller pressure.
- The feed roller pressure can be read from the gauge **2**.

Only for machines with hot-air nozzle:

- By turning the hand wheel **3**, you can adjust the hot air pressure.
- The hot air pressure can be read from the gauge **4**.

# 8 Installation and commissioning

After the machine has been unpacked, check it for any damages caused during transportation. If there are any damages, please notify the transport company and your local PFAFF agency.

The machine must only be installed and commissioned by qualified personnel. All relevant safety regulations must be strictly adhered to!

## 8.01 Installation

It must be ensured that suitable connections for electricity and compressed air, a level and firm standing surface and adequate lighting are available at the place of installation.

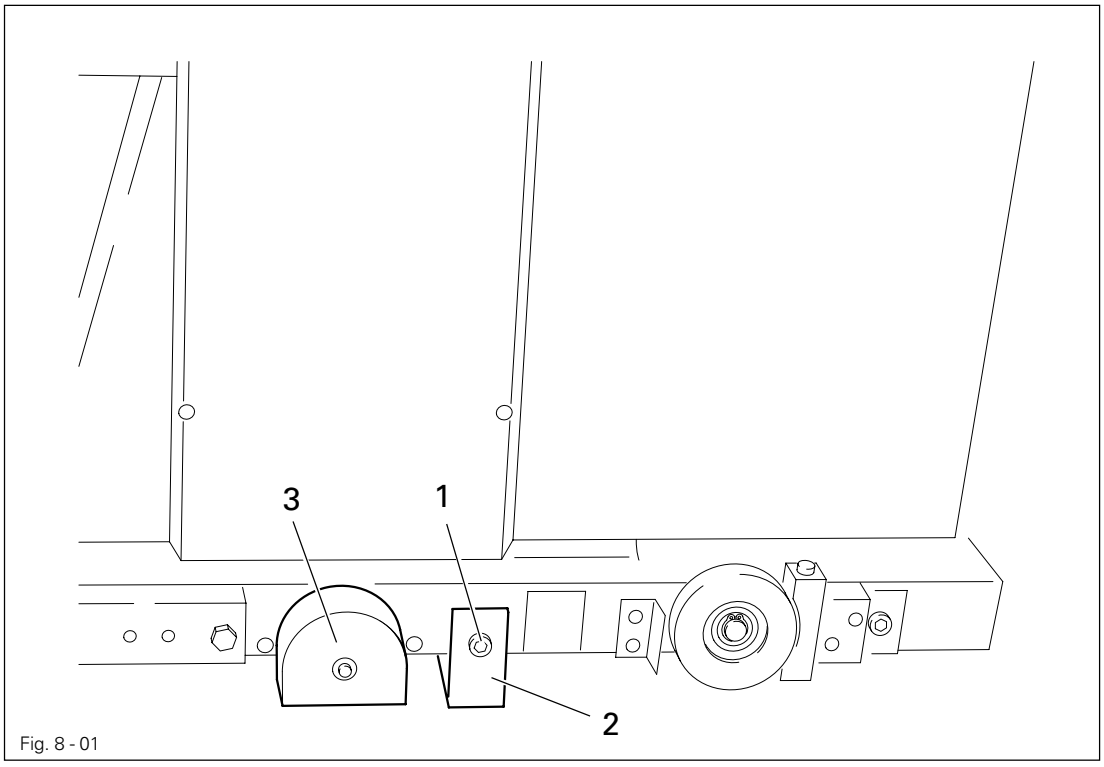

Fig. 8 - 01

Only for the PFAFF 8309-026:

The PFAFF 8309-026 may only be set down on the track system or on two square timbers!

- Loosen screw 1.
- Remove the transit support 2.

The transit support 2 protects the mobile drive unit from damage.

## 8.02 Commissioning

The machine may only be commissioned by qualified personnel. All relevant safety regulations must be strictly adhered to!

- Check the machine, in particular the electrical wiring, for any damage.
- Clean the machine thoroughly **(see Chapter 11 Care and Maintenance)**.
- Have qualified staff check, whether the machine can be used with the available power supply, and whether it is correctly connected.
  Never set the machine into operation if there is any discrepancy!

## 8.03 Switching the machine on / off

### 8.03.01 Switching the machine with a hot wedge on / off

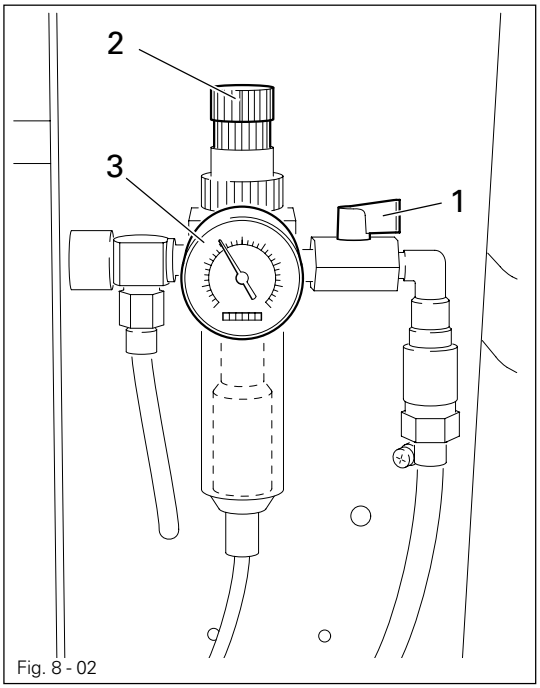

Fig. 8 - 02

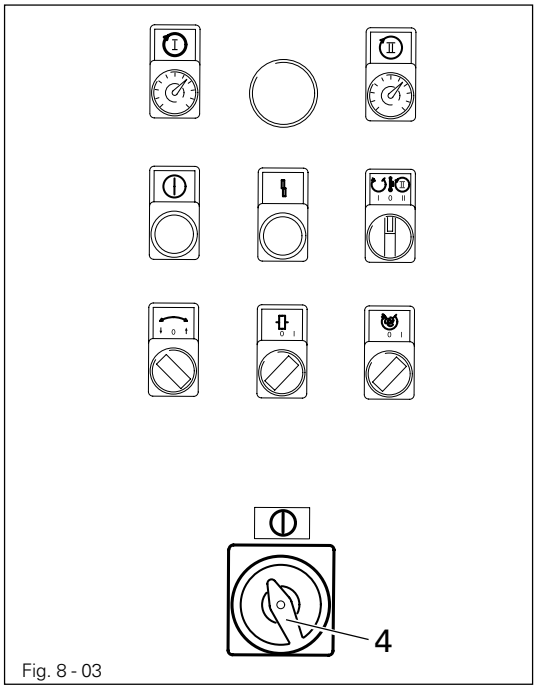

Fig. 8 - 03

Switch the machine on:

- Open the air valve **1**.
- Turn the regulator **2**, until an air pressure of **6 bar** is displayed on the gauge **3**.
- Set the on/off switch **4** to position **"I"**.

Switch the machine off:

- Close the air valve **1**.
- Set the on/off switch **4** to position **"0"**.

## 8.03.02 Switching the machine with a hot-air nozzle on / off

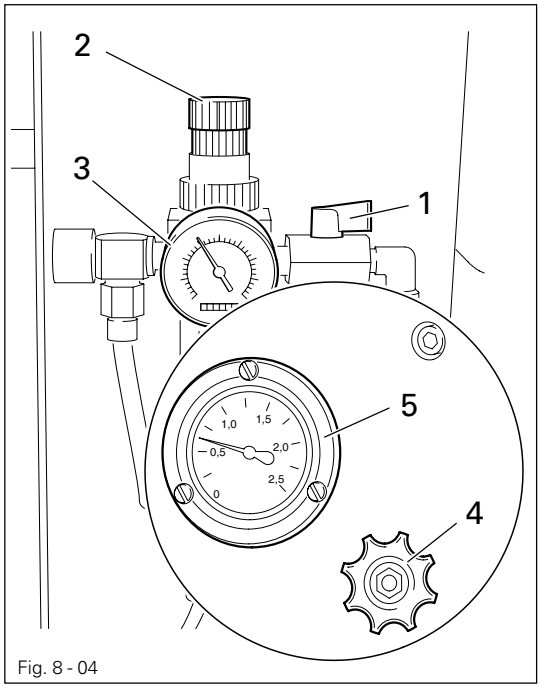

Fig. 8 - 04

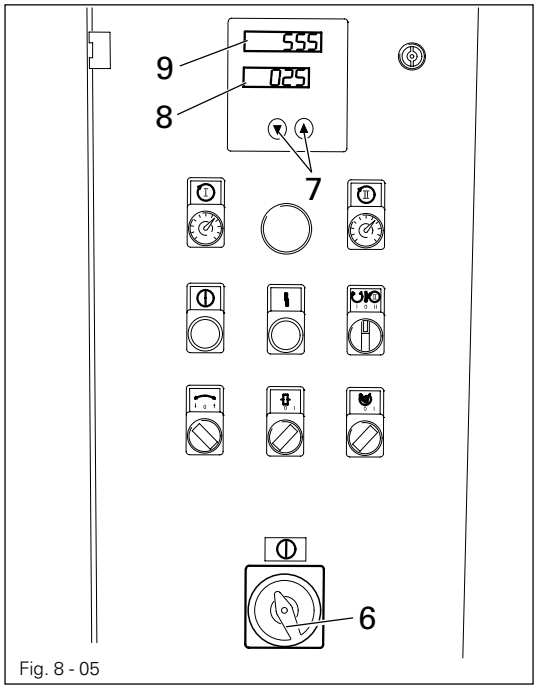

Fig. 8 - 05

Switch the machine on:

- Open the air valve **1**.
- Turn the regulator **2**, until an air pressure of **6 bar** is displayed on the gauge **3**.
- Turn the regulator **4** until the hot air pressure on the gauge **5** reaches at least **0.5 bar**.
- Set the on/off switch **6** to position **"I"**.

The hot air pressure must not sink below **0.5 bar**!
If the hot air pressure sinks below this level, there is a risk of the heating element melting! If the hot air pressue is too low, the heating system and the machine switch off automatically.

Switch the machine off:

Before turning off the air pressure at the air valve **1**, wait until the heat-sealing temperature has dropped below **100 °C**!
Otherwise the heating element can melt!

- By pressing key **7** preselect a temperature of 25° (display **7** on screen).
- Wait until the temperature indicator in display **8** has dropped below **100°C**.
- Close the air valve **1**.
- Set the on/off switch **6** to position **"0"**.

# 9 Setting up

All setting up work must only be carried out by personnel with the necessary training! Unless there are other instructions, the machine must be switched off for all setting up work and measures taken to ensure that the machine is not switched on again!

## 9.01 Adjusting the hot wedge (only for machines with hot wedge)

### 9.01.01 Lateral and angle positioning of the hot wedge

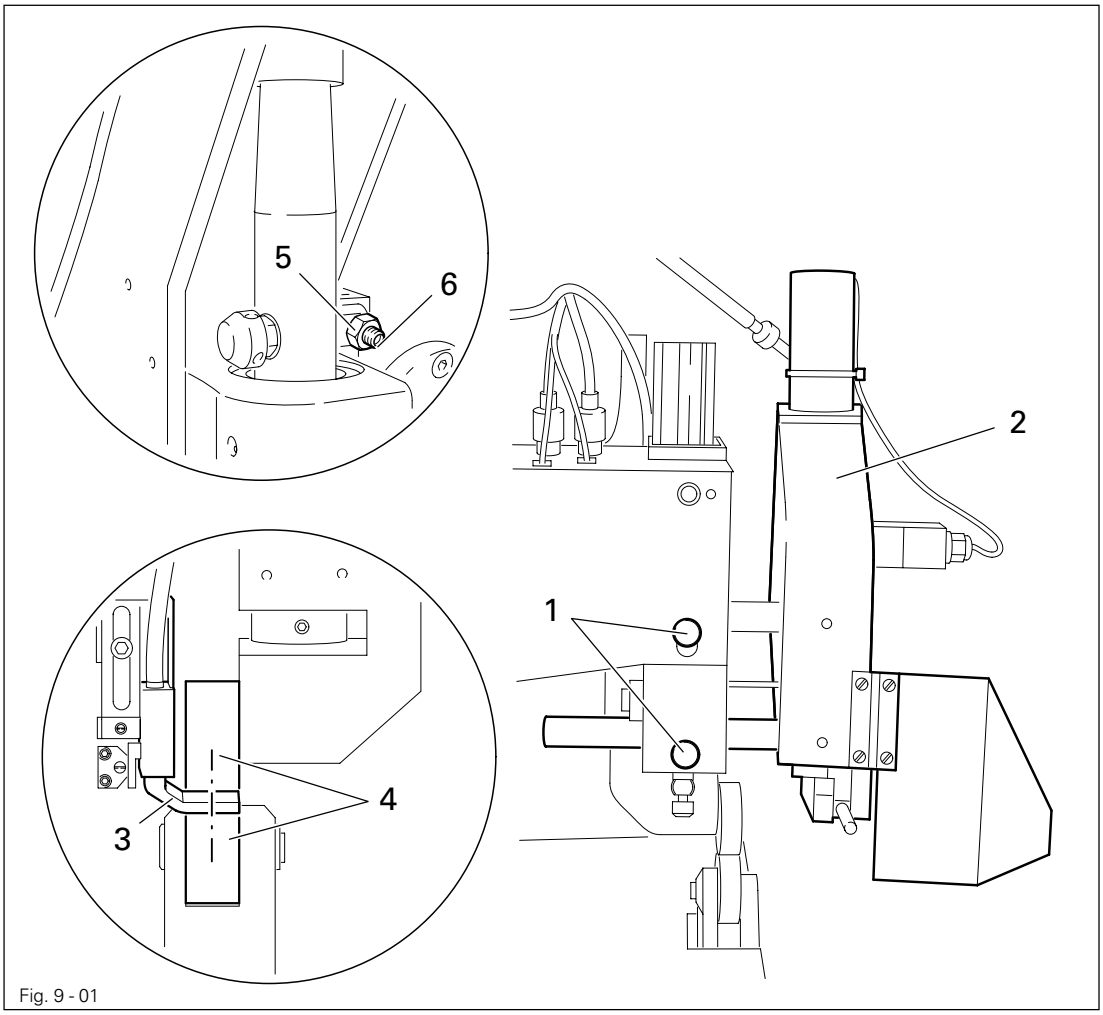


Fig. 9 - 01

Lateral positioning

- Loosen screw **1**.
- Move the entire swivel unit **2** to position the engaged hot wedge **3** so that it is centred with the feed rollers **4**.
- Tighten screw **1**.

Angle positioning

- Loosen nut **5**.
- Turn screw **6** to position the front edge of the hot wedge **3** parallel to the axes of the feed rollers **4**.
- Tighten nut **5**.
- Recheck the lateral position.

## 9.01.02 Height adjustment of the hot wedge

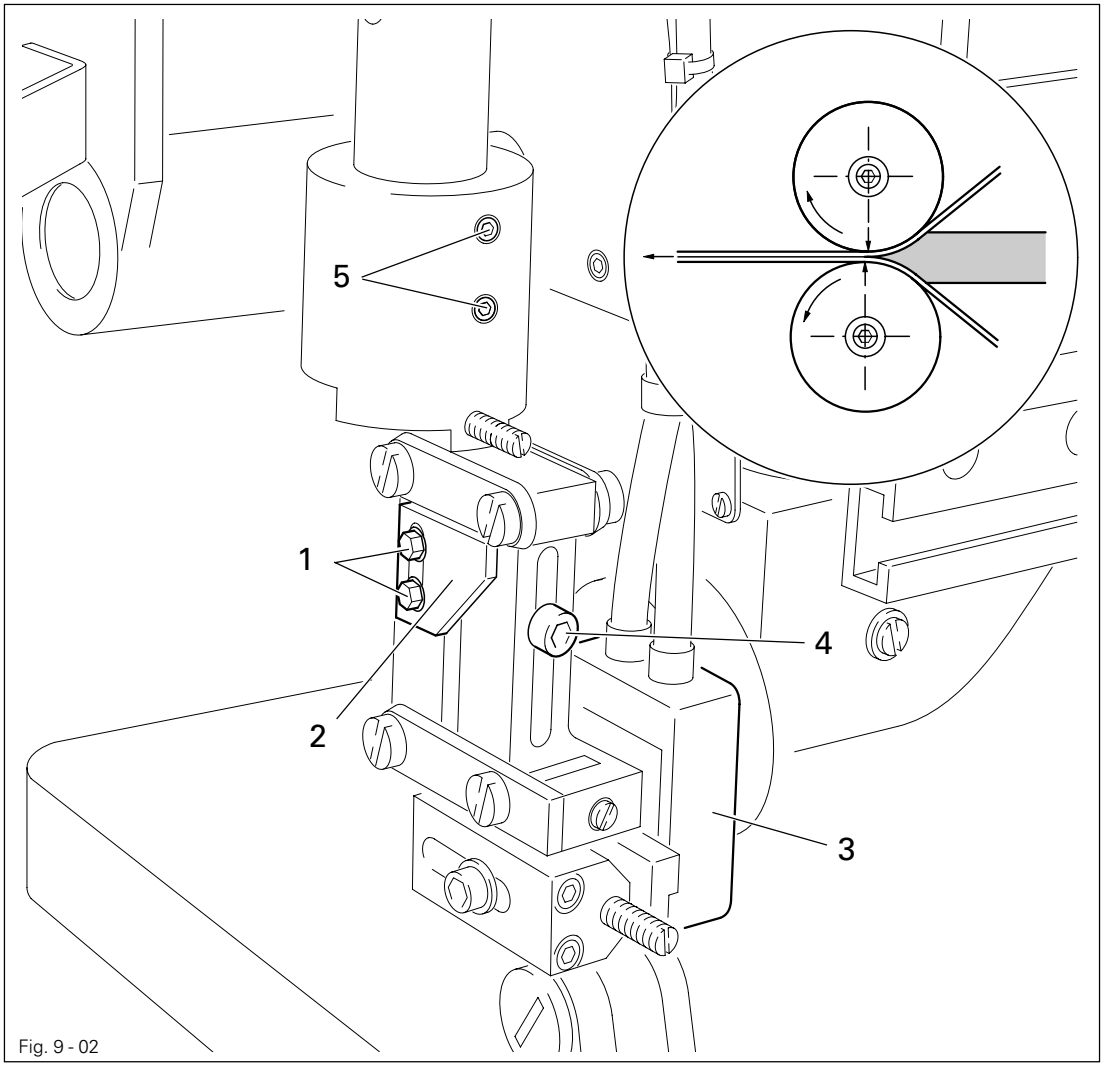


Fig. 9 - 02

Switch the machine off and let it cool down!
Danger of burns if the hot wedge is touched!

In the heat-sealing position, the tip of the spring-mounted hot wedge **3** should be a distance above the bottom feed roller corresponding to the thickness of the material to be sealed.

- Loosen screw **1** and adjust stop **2** so that the hot wedge **3**, when disengaged, is about **2 mm** below the sealing position.
- Loosen screw **4** and adjust pull-spring so that the sealing body rests with only light pressure against stop **2**.
- Loosen screws **5** and re-position the entire suspension unit, until the hinges are in a horizontal position.
- Tighten screws **5**.

## 9.01.03 Clearance and pressure of the hot wedge on the feed rollers

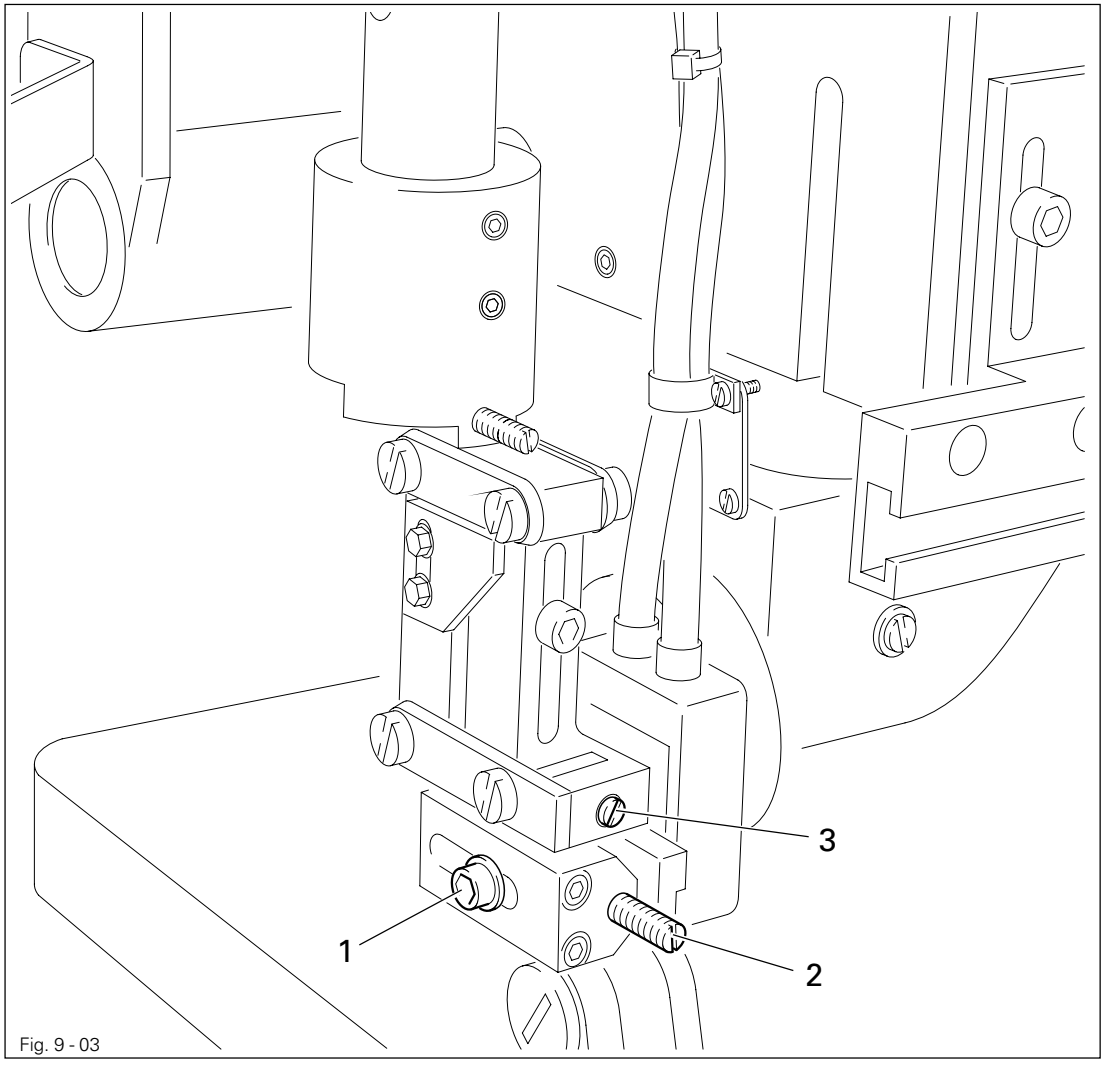

Fig. 9 - 03



Switch the machine off and let it cool down!
Danger of burns if the hot wedge is touched!



The hot wedge is pendulum-mounted to counteract irregularities, e.g. seam intersections, in the workpiece.

- Loosen screw **1**.
- Turn screw **2** until the hot wedge touches the workpiece.
- Tighten screw **1**.
- By turning screw **3**, adjust the pressure of the hot wedge to the best position for achieving a good seam quality when heat-sealing, still allowing the hot wedge to move backwards at seam intersections.



The right pressure setting can be determined with the aid of test seams.

## 9.02 Adjusting the hot-air nozzle (only for machines with hot-air nozzle)

### 9.02.01 Lateral and angle positioning of the hot-air nozzle

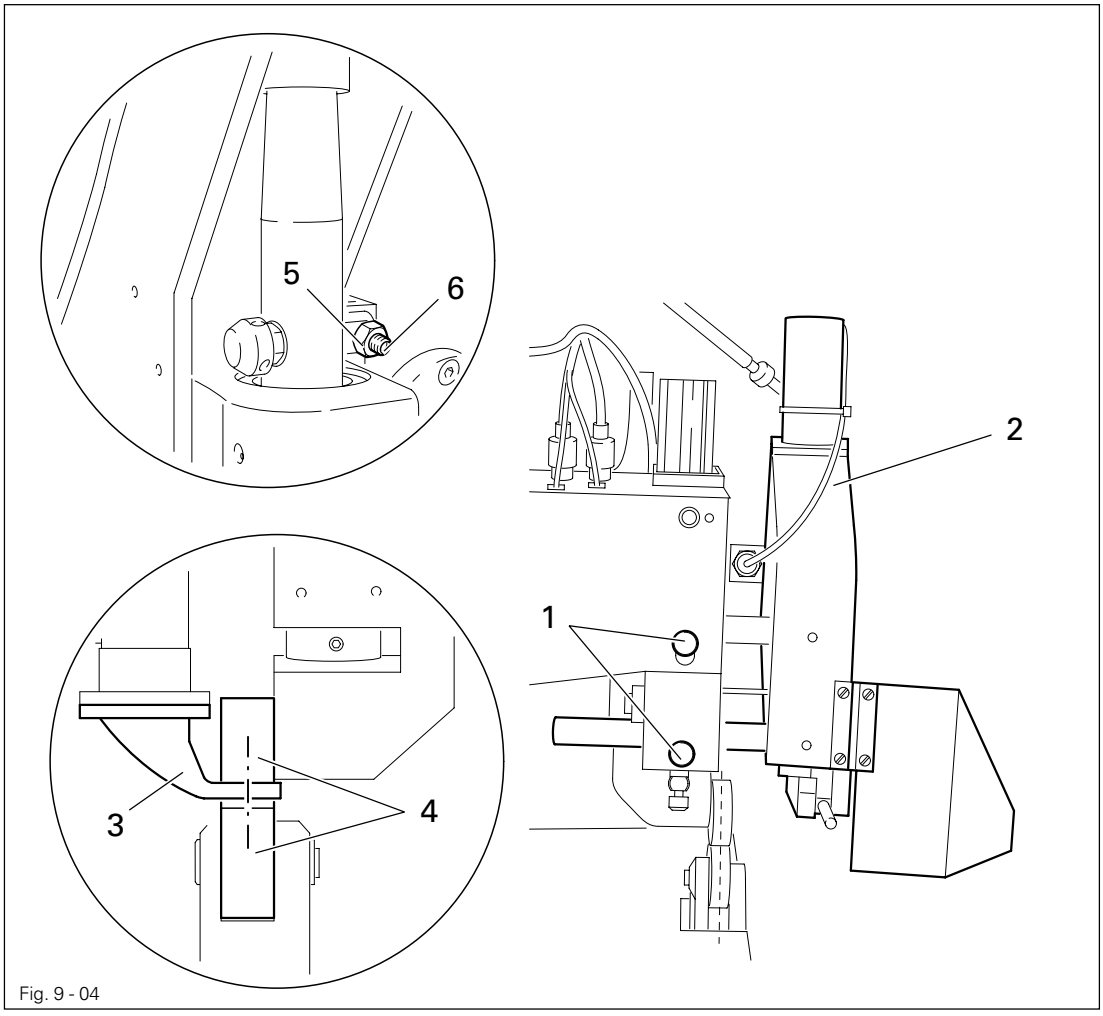


Fig. 9 - 04

Lateral positioning

- Loosen screw **1**.
- Move the entire swivel unit **2** to position the engaged hot-air nozzle **3** so that it is centered with the feed rollers **4**.
- Tighten screw **1**.

Angle positioning

- Loosen nut **5**.
- Turn screw **6** to position the front edge of the hot-air nozzle **3**, viewed from above, parallel to the axes of the feed rollers **4**.
- Tighten nut **5**.
- Recheck the lateral position.

## 9.02.02 Height adjustment of the hot-air nozzle

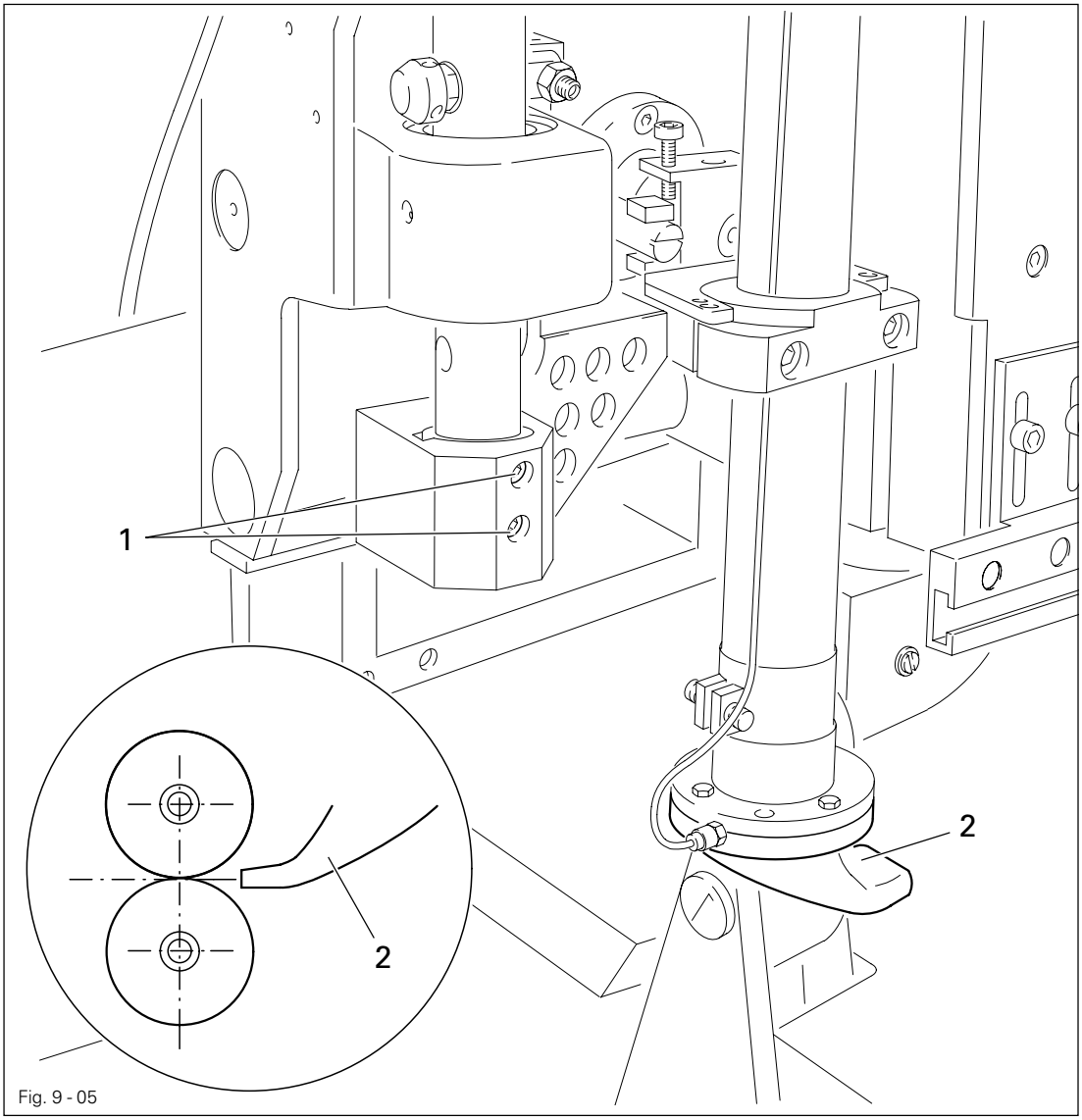


Fig. 9 - 05

Do not put your hand near the hot-air nozzle!
Danger of burns if the hot-air nozzle is touched!

As the position of the hot-air nozzle can change during heating up, the adjustment should be carried out when the machine is at operating temperature.

- Loosen screw **1**.
- Re-position the entire suspension unit, until the hot-air nozzle **2** is level with the gap between the feed rollers.
- Tighten screw **1**.

9.02.03 Distance of the hot-air nozzle to the feed rollers

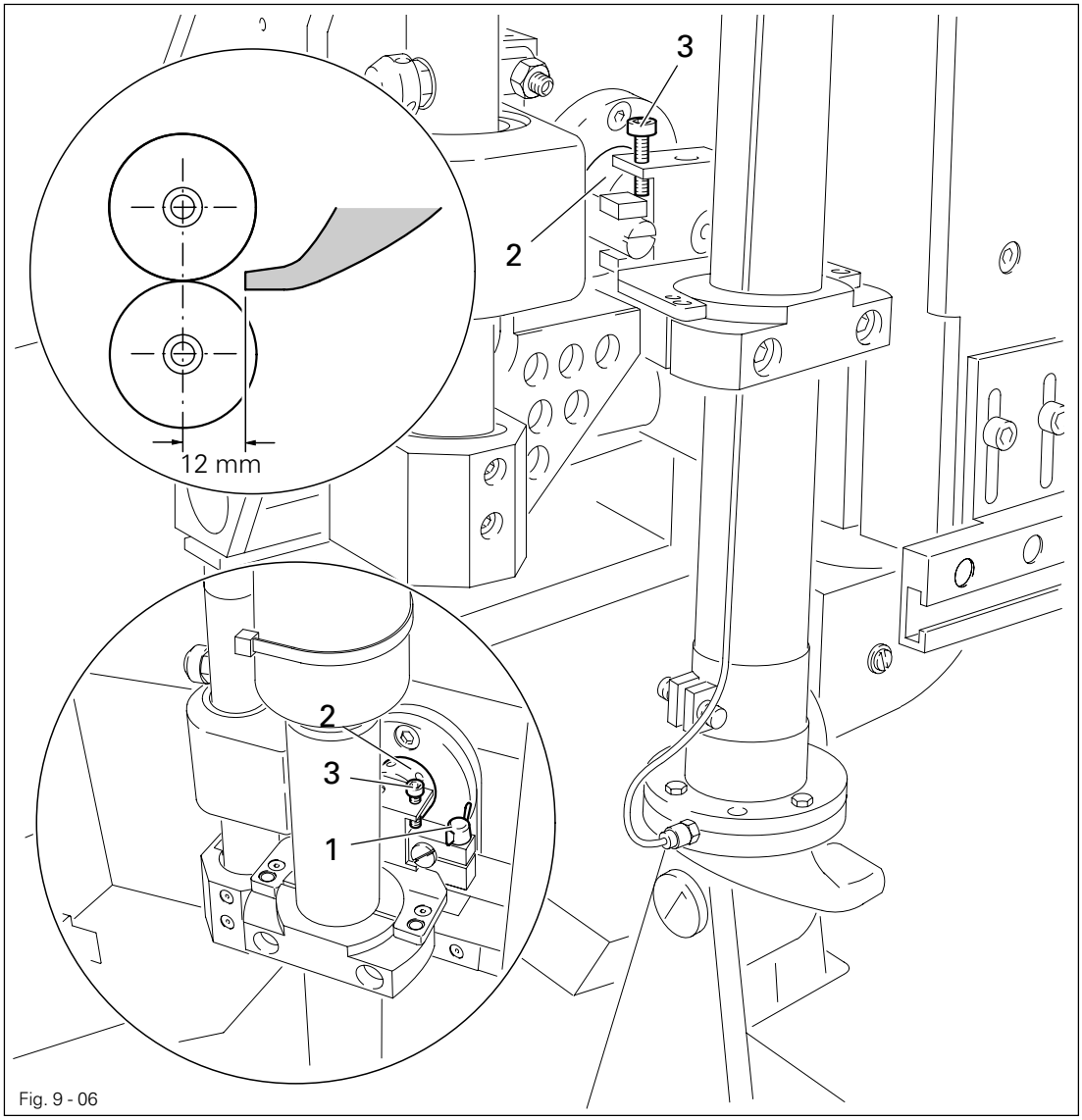


Fig. 9 - 06



Switch the machine off and let it cool down!
Danger of burns if the hot-air nozzle is touched!

- Loosen wing nut **1**.
- Turn milled nut **2** until the front edge of the hot-air nozzle is about **12 mm** in front of the feed roller axes.
- Tighten wing nut **1**.
- Turn screw **3** to position the front edge of the hot-air nozzle parallel to the feed roller axes.

## 9.03 Setting the penetration depth

The penetration depth is dependent on the thickness of the material to be sealed. The distance between the feed rollers is set correctly, if it is just possible to pull out one layer of the sealing material between the feed rollers, when the top feed roller has been lowered.

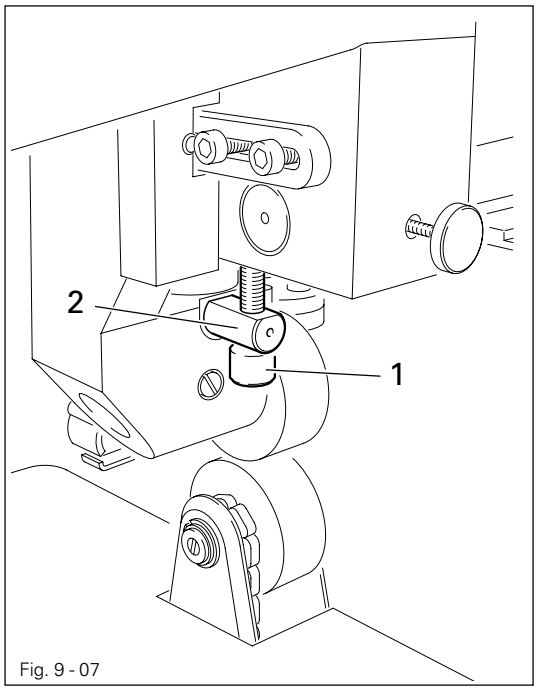

Fig. 9 - 07

During adjustment work do not raise or lower the feed roller! Danger of crushing between screw **1** and stop **2**!

- Set the penetration depth by turning screw **1**.

## 9.04 Switching the automatic heating element on / off

- Depending on the required work sequence, switch the automatic operation of the heating element on or off (see **Chapter 7.14 Switch for automatic operation of the heating element** and **Chapter 10 Heat sealing)**.

## 9.05 Setting the heat-sealing temperature and speed

- Switch the machine on.

Adjusting the sealing temperature

- Adjust the temperature according to the material to be sealed.
- The temperature of the hot air or of the hot wedge is displayed in °C. (see **Chapter 7.07 Regulator for the heat-sealing temperature.**)

Adjusting the sealing speed

- Adjust the speeds for both speed levels according to the material to be sealed. (see **Chapter 7.09 Regulator for the heat-sealing speeds**).

## 9.06 Setting the hot air pressure and heat-sealing pressure

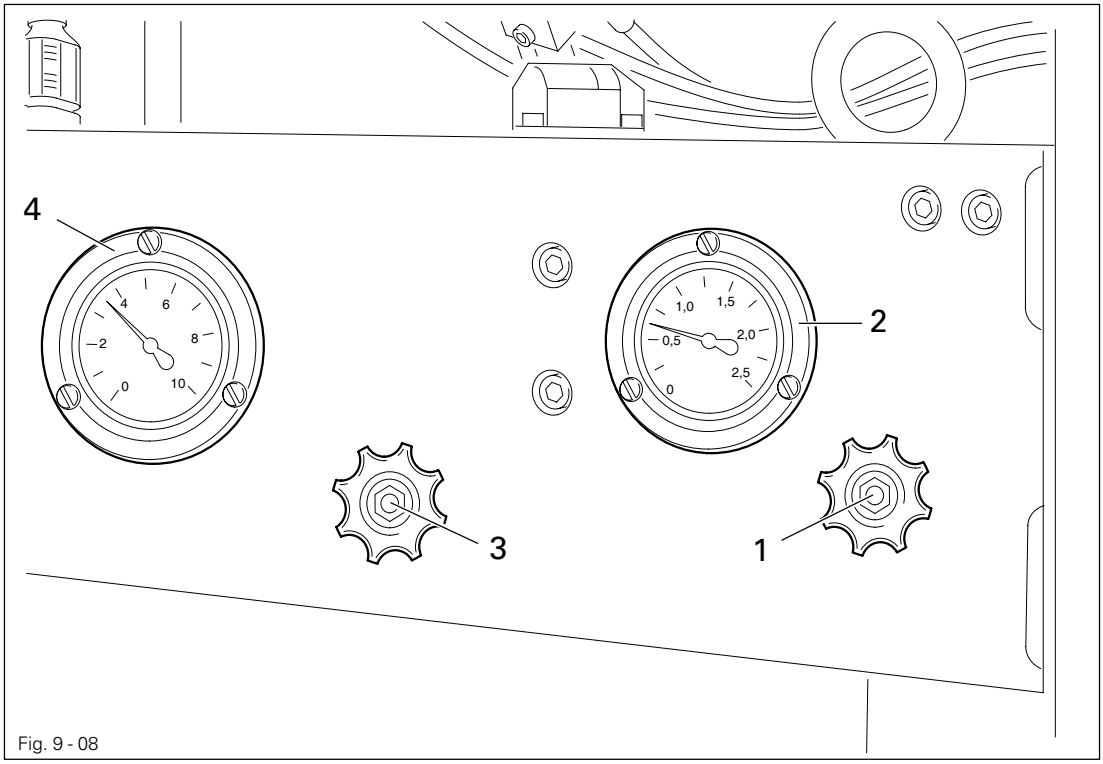


Fig. 9 - 08

- Switch the machine on.

Setting the hot air pressure (only for machines with a hot-air nozzle)

- Set the hot air pressure with hand wheel **1** taking the sealing material, sealing speed and seam width into consideration.
- To set the hot air pressure, always turn the hand wheel **1** until it is completely closed and then turn it in a clockwise direction until the required pressure is displayed on gauge **2**.



Before switching on the on/off switch make sure that the air pressure of the sealing unit is more than **0.5 bar**!
If the hot air pressure is lower than this level, the heating element can be destroyed! If the hot air pressure is too low the heating system is switched off automatically.

Setting the sealing pressure

- Depending on the sealing material, set the sealing pressure by turning the hand wheel **3**.
- The sealing pressure can be read from the gauge **4**.

# 10 Heat-sealing



The machine may only be operated by personnel with the necessary training! The operating staff is responsible for making sure that only authorized persons are in the danger zone of the machine!

## 10.01 Heat-sealing principle

To achieve the best possible sealing results, certain requirements must be fulfilled concerning the material and the machine setting.

The material used must be:

- suitable for heat-sealing,
- suitable for processing on the machine from the point of view of thickness and properties.

The seam area of the material used must be clean.

The basic requirements for the heat-sealing equipment are:

- correct operating temperature of the hot wedge or the correct hot-air temperature;
- correct setting of the hot-air pressure, for machines with hot-air nozzle
- correct positioning of the hot wedge to the roller gap, for machines with hot wedge;
- correct selection of the feed rollers (silicon or steel);
- optimum pressure of the feed rollers on the sealing material;
- correct distance between the feed rollers (penetration depth adjustment) and
- correct sealing speed.



All the settings of the heat-sealing device are always dependent on the material used and the ambient temperature. As the individual operating parameters influence each other, it is only possible to determine the best possible settings by carrying out test sealings.

## 10.02 Heat-sealing procedure



Only for the PFAFF 8309-026
To prevent any folds forming in the material during the heat-sealing procedure, the mobile drive of the machine can be stopped by operating the knee switch (see **Chapter 7.06 Knee switch**).

### 10.02.01 Heat-sealing without automatic heating element

- Prepare the machine in accordance with the materials and switch off the automatic heating element (**see Chapter 9 Preparation**).
- Switch the machine on (see **Chapter 8.03 Switching the machine on/off**).
- Raise the feed roller (see **Chapter 7.03 Foot switch for raising/lowering feed roller**).
- Place the material for heat-sealing between the feed rollers and lower the feed roller.
- Start the feed rollers and at the same time swing the heating element into position (see **Chapter 7.04 Foot switch for starting the feed rollers** and **7.05 Foot switch for engaging/disengaging the heating element**)
- Disengage the heating element at the end of the seam.
- Stop the feed rollers.



In the case of machines with a hot wedge, the heating element should be swung out of position before the end of the sealing seam, to prevent the hot wedge being caught between the feed rollers at the end of the sealing seam!

### 10.02.02 Heat-sealing with automatic heating element

- Prepare the machine in accordance with the materials and switch on the automatic heating element (see **Chapter 9 Setting up**).
- Switch the machine on (see **Chapter 8.03 Switching the machine on/off**).
- Raise the feed roller (see **Chapter 7.03 Foot switch for raising/lowering feed roller**).
- Place the material for heat-sealing between the feed rollers and lower the feed roller.
- Start the feed rollers (see **Chapter 7.04 Foot switch for starting the feed rollers**). The heating element is engaged automatically.
- At the end of the seam, stop the feed rollers. The heating element is disengaged automatically.



In the case of machines with a hot wedge, the heating element should be swung out of position manually before the end of the sealing seam by operating the foot switch (see **7.05 Foot switch for engaging/disengaging heat element**), to prevent the hot wedge being caught between the feed rollers at the end of the sealing seam!

# 11 Care and maintenance

## 11.01 Maintenance table

| | |
|---|---|
| Clean hot wedge | daily, before each use |
| Clean hot-air nozzle | as required, normally once a week |
| Grind in hot wedge | as required, normally once a week |
| Clean air filter / regulator | as required |
| Clean filter for finest particles (only for machines with hot-air nozzle) | as required |
| Change feed rollers | as required |
| Tighten drive chains | as required |
| Grease drive chains | as required |

## 11.02 Cleaning

### 11.02.01 Machines with hot wedge



Switch the machine off and let it cool down!
Danger of burns if the hot wedge is touched!



- Before each use remove any burnt remains from the top and base of the hot wedge with a soft brass-wire brush.

### 11.02.02 Machines with hot-air nozzle



Switch the machine off and let it cool down!
Danger of burns if the hot-air nozzle is touched!



- Free the opening of the hot-air nozzle from the remains of the heat-sealing material as required.

## 11.03 Checking/adjusting the air pressure

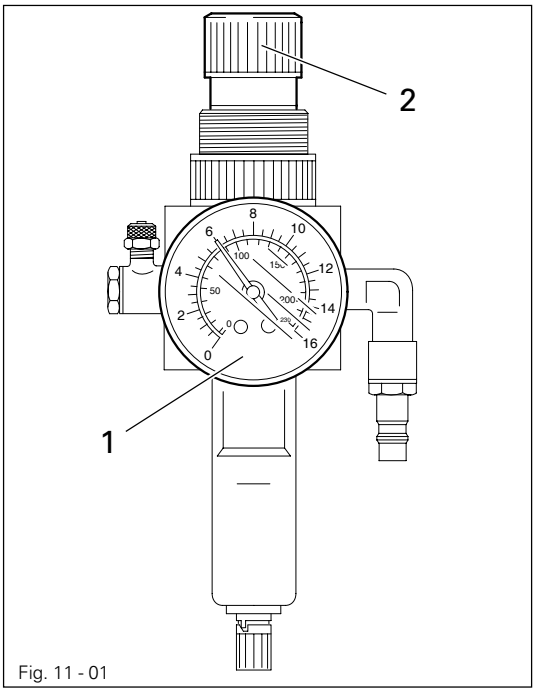

Fig. 11 - 01

- Before operating the machine, always check the air pressure on gauge **1**.
- Gauge **1** must show a pressure of **6 bar**.
- If necessary adjust to this level.
  To do so, pull up knob **2** and turn it until the correct pressure level is reached.

## 11.04 Emptying/cleaning water container of the air filter / regulator



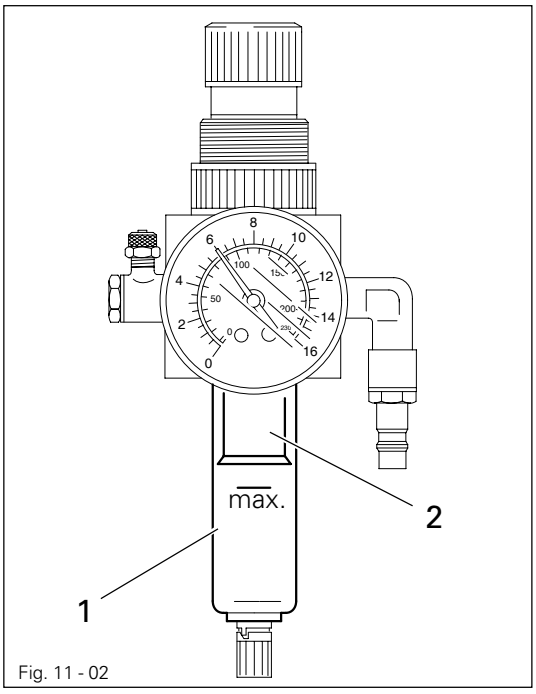

Fig. 11 - 02



Switch the machine off.
Remove the compressed air hose from the air filter.

### Emptying the water container

- The water container **1** empties itself automatically when the compressed air hose is removed from the air filter / regulator.

### Cleaning the filter

- Unscrew water container **1** and remove filter **2**.
- Clean the filter with compressed air.
- Screw filter **2** and water container **1** back into place.

## 11.05 Checking fuses

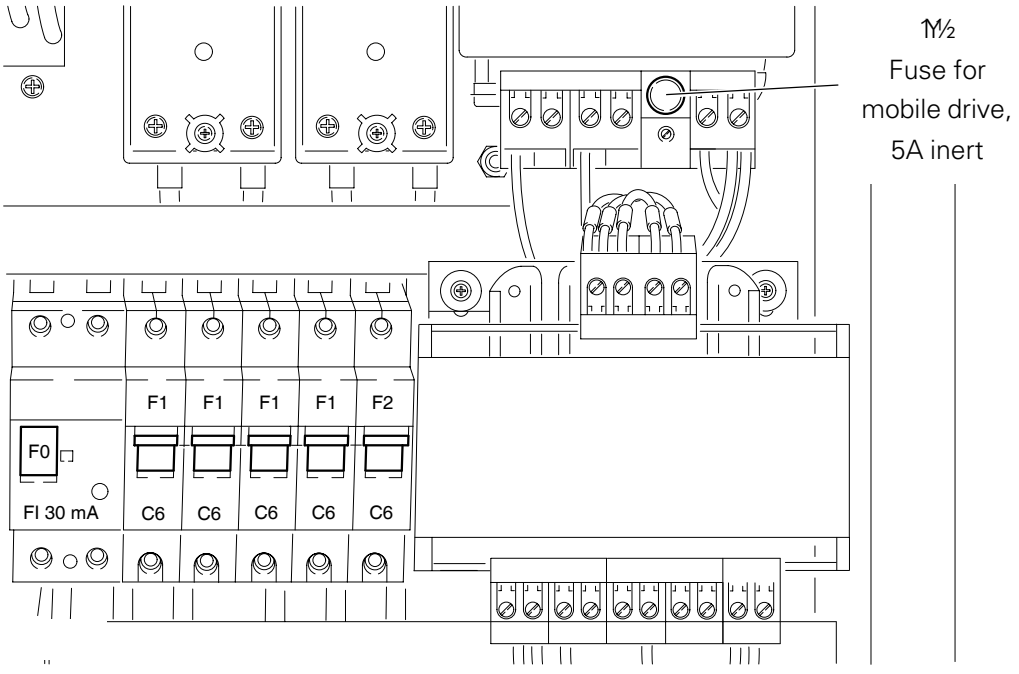


Fig. 11 - 03

The fuses have the purpose of preventing further damage if there is a short-circuit or overload.

Before switching the machine back on, the cause of the disturbance must be remedied!

Disconnect the mains plug!

Danger from electric voltage!

- Open the switch cabinet.
- Check the fuses and reset them if necessary, after the fault has been remedied.
- Close the switch cabinet.

## 11.06 Drive chains

### 11.06.01 Tightening the drive chains

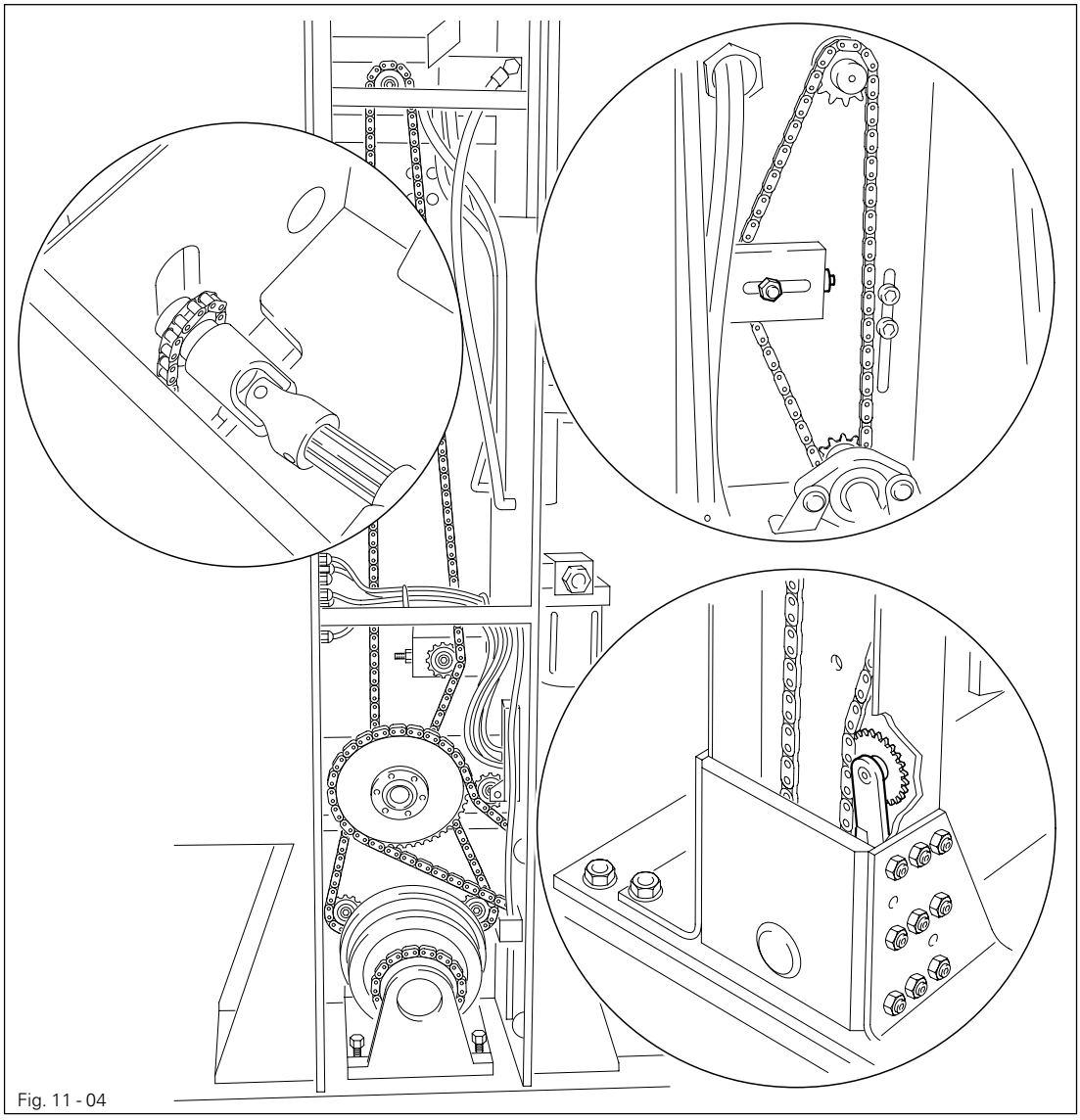

Fig. 11 - 04

Switch the machine off!

- Unscrew the chain guards.
- Tighten all the drive chains using the corresponding tensioning fixtures as required.

The drive chains of the feed rollers should be tightened, when the backlash on the feed rollers is too great.

## 11.06.02 Greasing the drive chains



- Grease the drive chains as required.

The greasing frequency depends on the operating conditions (moisture, amount of dust etc.).

Only use sodium grease with a dripping point of 150 °C and a rolling pressure of 375 - 405 mm / 10 at 25 °C.

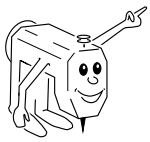

We recommend PFAFF chain grease
Order-No. 280-1-120 243.

## 11.07 Cleaning filter for finest particles (only for machines with hot-air nozzle)



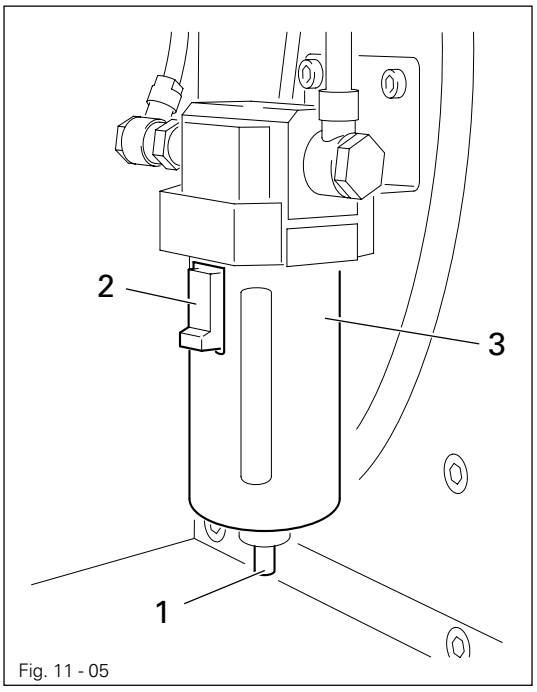

Fig. 11 - 05

Switch the machine off!
Turn off the compressed air!

- Release the remaining air and condensation by pressing the red button **1**.
- Press down switch-key **2**, twist container **3** in an anti-clockwise direction and remove it.
- Unscrew the filter for finest particles and clean or change it.
- Installation in the reverse order.

Do not fill oil into container **3**!

## 11.08 Changing top feed roller

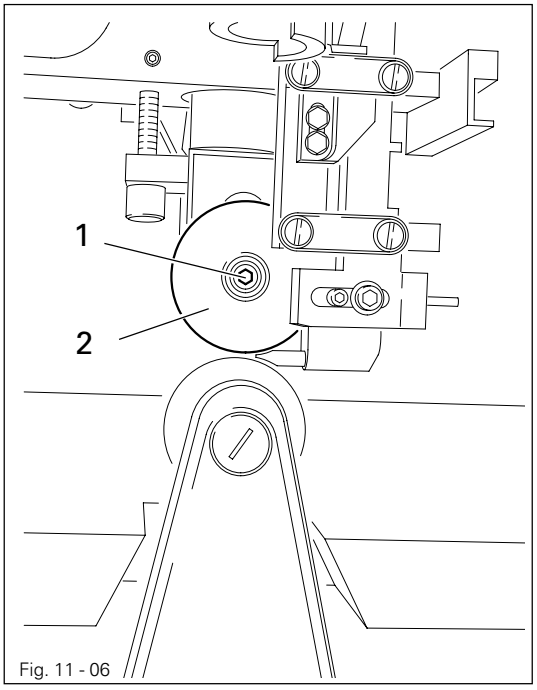

Fig. 11 - 06

Switch the machine off and let it cool down!
Danger of burns if the hot wedge or the hot-air nozzle is touched!

- Remove screw **1**.
- Remove feed roller **2** from the shaft and change it.
- Tighten screw **1**.

## 11.09 Changing bottom feed roller

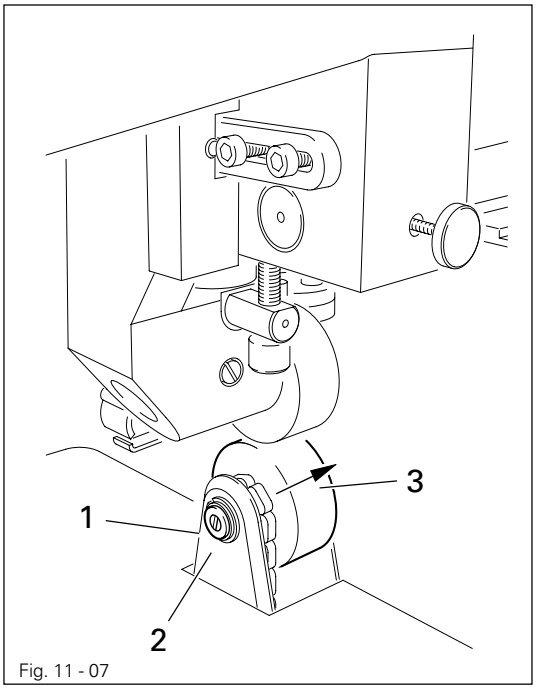

Fig. 11 - 07

Switch the machine off and let it cool down!
Danger of burns if the hot wedge or the hot-air nozzle is touched!

- Remove screw **1**.
- Remove washer **2**.
- Push out the shaft in the direction of the arrow, remove feed roller **3** and change it.
- Installation in the reverse order.

## 11.10 Changing the heating cartridge (only for machines with hot-air nozzle)

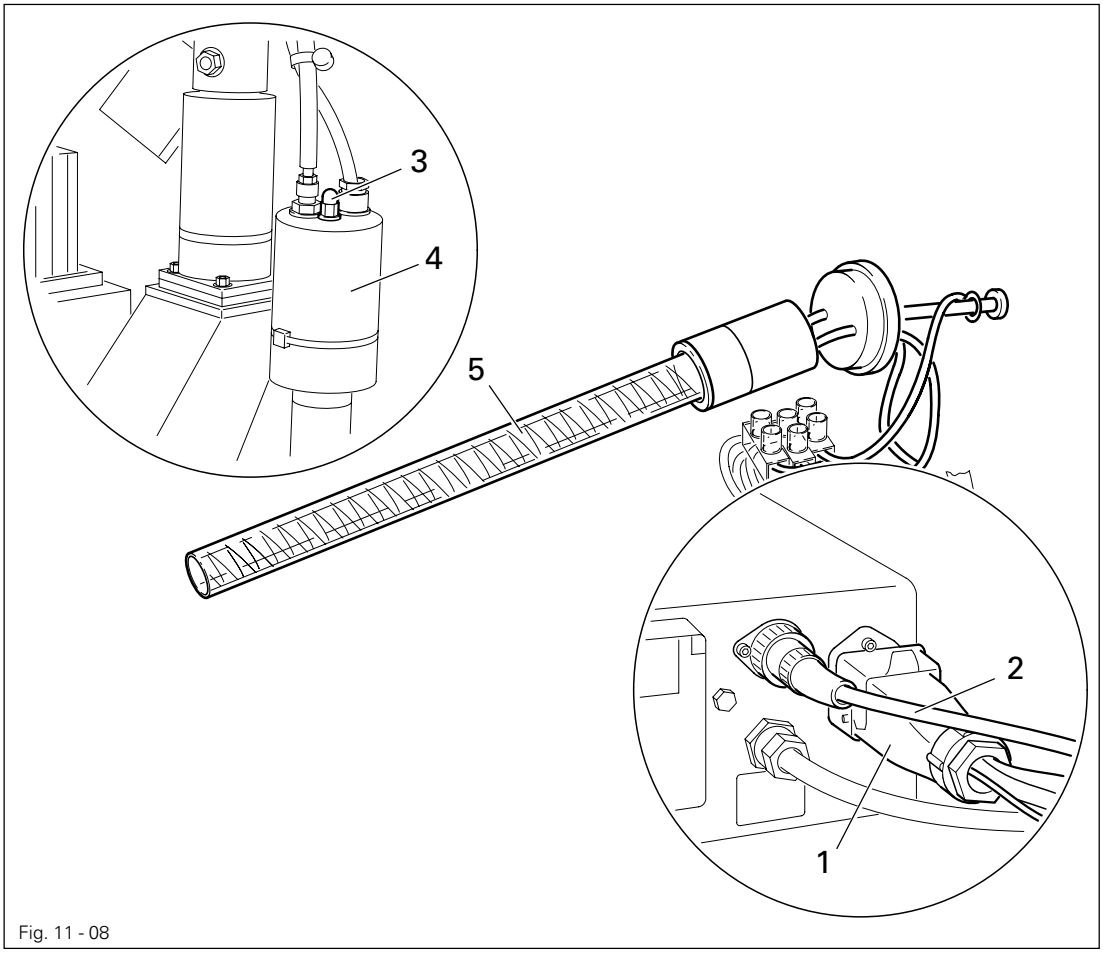


Fig. 11 - 08



Disconnect the mains plug!



Danger from electric voltage!



Wait until the hot-air nozzle has cooled down! Danger of burns!

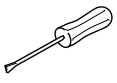

- Remove air hose.
- Remove plugs **1** and **2** on the back of the appliance.
- Unscrew screw **3** and remove cover **4**.
- Extract heating cartridge **5** from the tube, disconnect and change it.
- Connect new heating cartridge and place it in the tube.
- Replace the cover **4** and fix it in place with screw **3**.
- Insert plugs **1** and **2**.
- Replace air hose.

## 11.11 Changing the temperature sensor

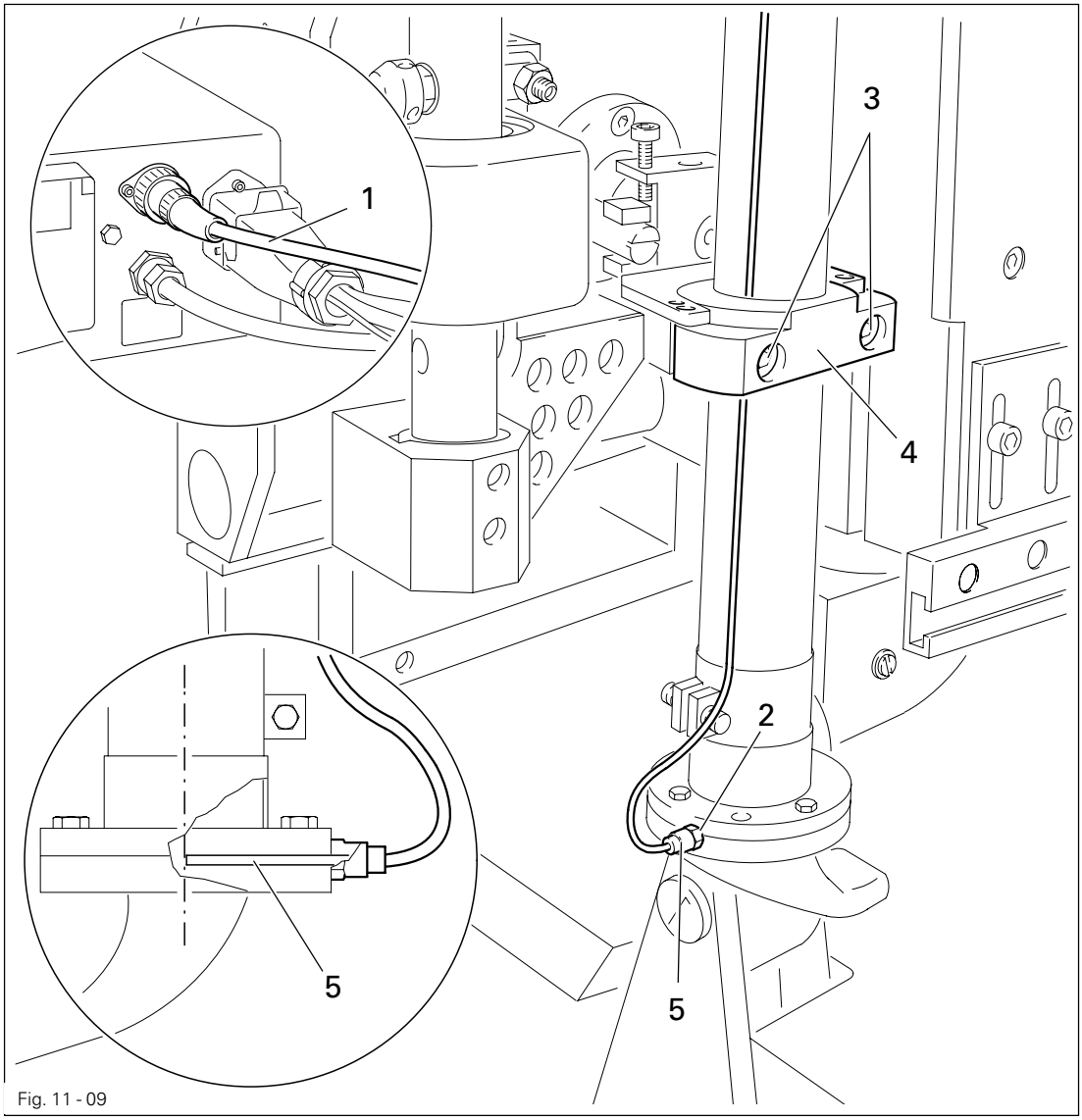


Fig. 11 - 09

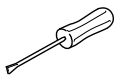

- Remove plug **1**.
- Remove cable clip.
- Loosen screw **2**.
- Unscrew screws **3** and remove shell **4**.
- Remove temperature sensor **5**.
- Install new temperature sensor in such a way that the tip of the sensor is in the centre of the hot-air nozzle and tighten screw **2**.
- Install the cable of the temperature sensor so that it runs along the groove of the shell **4** and connect it to the cable clips.
- Screw on shell **4** with the screws **3**.
- Insert plug **1**.

## 11.12 Changing hot wedge (only for machines with hot wedge)

If the heating cartridges are defective or if the hot wedge is very worn, and optimum sealing results cannot be achieved by re-adjustment, the hot wedge must be replaced.

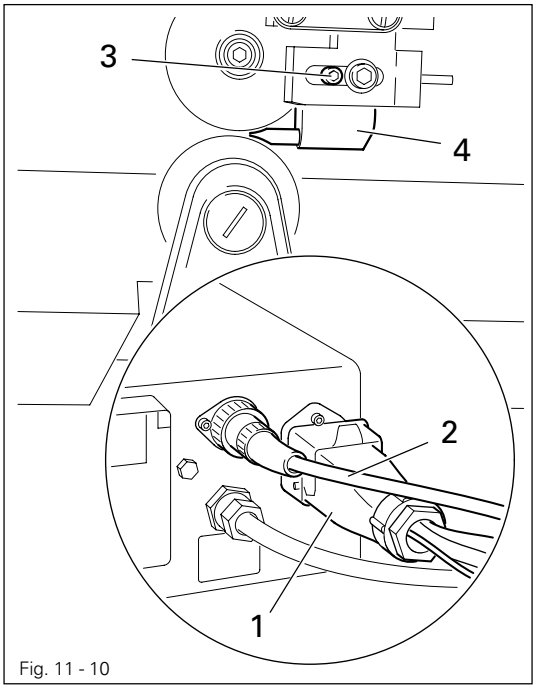

Fig. 11 - 10

Switch the machine off and let it cool down!
Danger of burns if the hot wedge is touched!

- Remove lines **1** and **2**.
- Loosen screw **3**.
- Remove hot wedge **4** from its holder.
- Place new hot wedge into position and install it with screw **3** at the same distance to the feed rollers as before.
- Connect lines **1** and **2**.

When a new hot wedge has been installed, this has to be ground in.

## 11.13 Changing the hot-air nozzle (only for machines with hot-air nozzle)

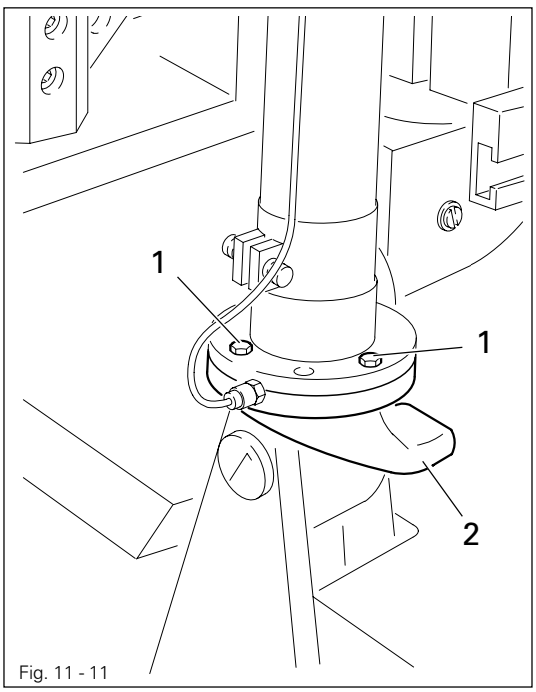

Fig. 11 - 11

Switch the machine off and let it cool down!
Danger of burns if the hot-air nozzle is touched!

- Unscrew screws **1** (**4** screws).
- Remove hot-air nozzle **2** and replace with required hot-air nozzle.
- Tighten screws **1**.
- Adjust hot-air nozzle (see **Chapter 9.02**).

## 11.14 Grinding in the hot wedge (only for machines with hot wedge)

The hot wedge must only be ground in, if it has become deformed by wear or corrosion, or if a new hot wedge has been installed.

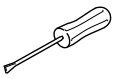

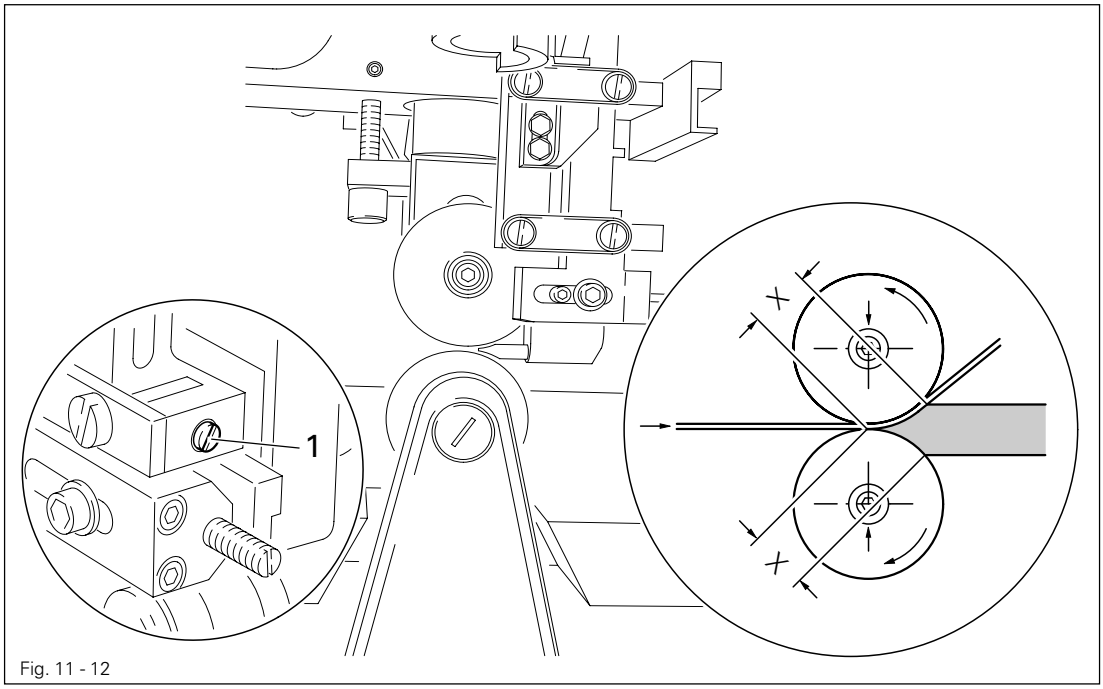


Fig. 11 - 12

- Set the sealing temperature at "0".



Let the hot wedge cool down!
Danger of burns if the hot wedge is touched!

- Switch the machine on.
- If necessary, switch the mobile drive off.
- Mount smooth feed rollers.
- Set the running direction to „reverse".
- Check the setting of the hot wedge and readjust if necessary (see **Chapter 9.01**)
- Insert screw **1** as far as possible.
- Place emery band (grain 100) between the feed rollers and lower the feed roller.



Do not place fingers between the feed rollers!
Danger of crushing if the fingers are caught while the feed rollers are running!

- Swing hot wedge into position and start the feed rollers.
- Guide the emery band by hand and grind both sides of the hot wedge, until its shape is adapted to the feed rollers, and the measurement "x" is the same at the top and at the bottom.
- Adjust the distance of the hot wedge to the feed rollers (see **Chapter 9.01.03**).

## 11.15 Adjust safety coupling (only for PFAFF 8309-026)

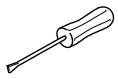

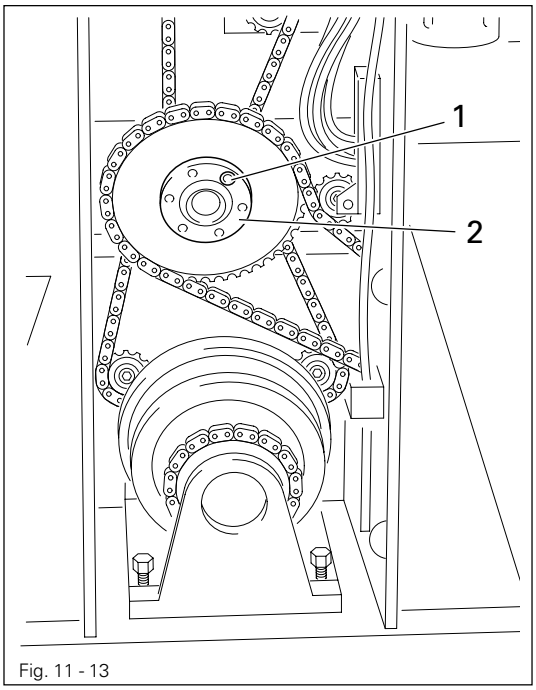


Fig. 11 - 13

- Loosen screw **1**.
- Adjust ring **2**, so that the safety coupling grips during normal operation, but the machine stops immediately at obstacles.

## 11.16 Adjust brake (only for PFAFF 8309-026)

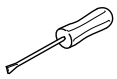

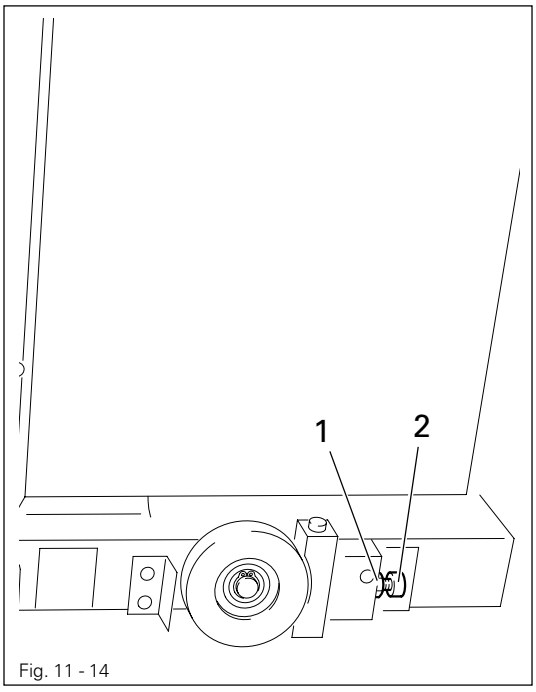


Fig. 11 - 14

- Loosen nut **1**.
- Turn screw **2** so that the machine does not continue to run automatically, when the mobile drive is stopped.

## Reference list for the circuit diagrams

| | |
|---|---|
| Q0 | Main switch |
| F0 | Leakage current circuit breaker |
| F1/1 | Main fuse |
| F1/2 | Fuse heating unit |
| F2 | Control voltage fuse |
| 1H1 | Machine lamp |
| 1M3 | Machine compressor |
| 1M2 | Extraction unit |
| 1M1 | Drive motor |
| 1Y1 | Drive motor brake |
| 1Y2 | Engagement unit valve |
| 1Y3 | Roller up valve |
| 1Y1/2 | Mobile drive clutch (mobile version) |
| T2 | Control voltage transformer |
| T1/G1 | Clutch power supply unit (mobile version) |
| ZM1 | Radio interference filter |
| AM1 | Frequency converter |
| R1/1 | Speed potentiometer stage 1 |
| R1/2 | Speed potentiometer stage 2 |
| H0 | Control lamp main switch on |
| H1 | Control lamp direction pre-selection |
| H1/2 | Control lamp clutch (mobile version) |
| H3 | Control lamp malfunction |
| H5 | Control lamp automatic |
| H6 | Horn malfunction |
| S1 | Switch direction pre-selection |
| S3 | Reset button malfunction |
| S4 | Switch second heating stage |
| S5 | Switch automatic |
| S1/2 | Mobile drive clutch (mobile version) |
| 1F1 | Pressure monitor |
| 1S2/1 | Switch hot wedge engaged |
| 1S1/1 | Foot switch stage 1 / 2 |
| 1S2 | Foot switch engage hot wedge |
| 1S3 | Foot switch roller up |
| 1S1/2 | Switch shutdown device (mobile version) |
| B1 | Temperature sensor |
| AR1 | Temperature control unit |
| E1 / E2 | Heating element |
| K2/1 K2/2 | Solid state relays |
| KT1 | Time relay drive unit start delay |
| KT2 | Time relay slow-down time extraction unit |

PFAFF 8309-023

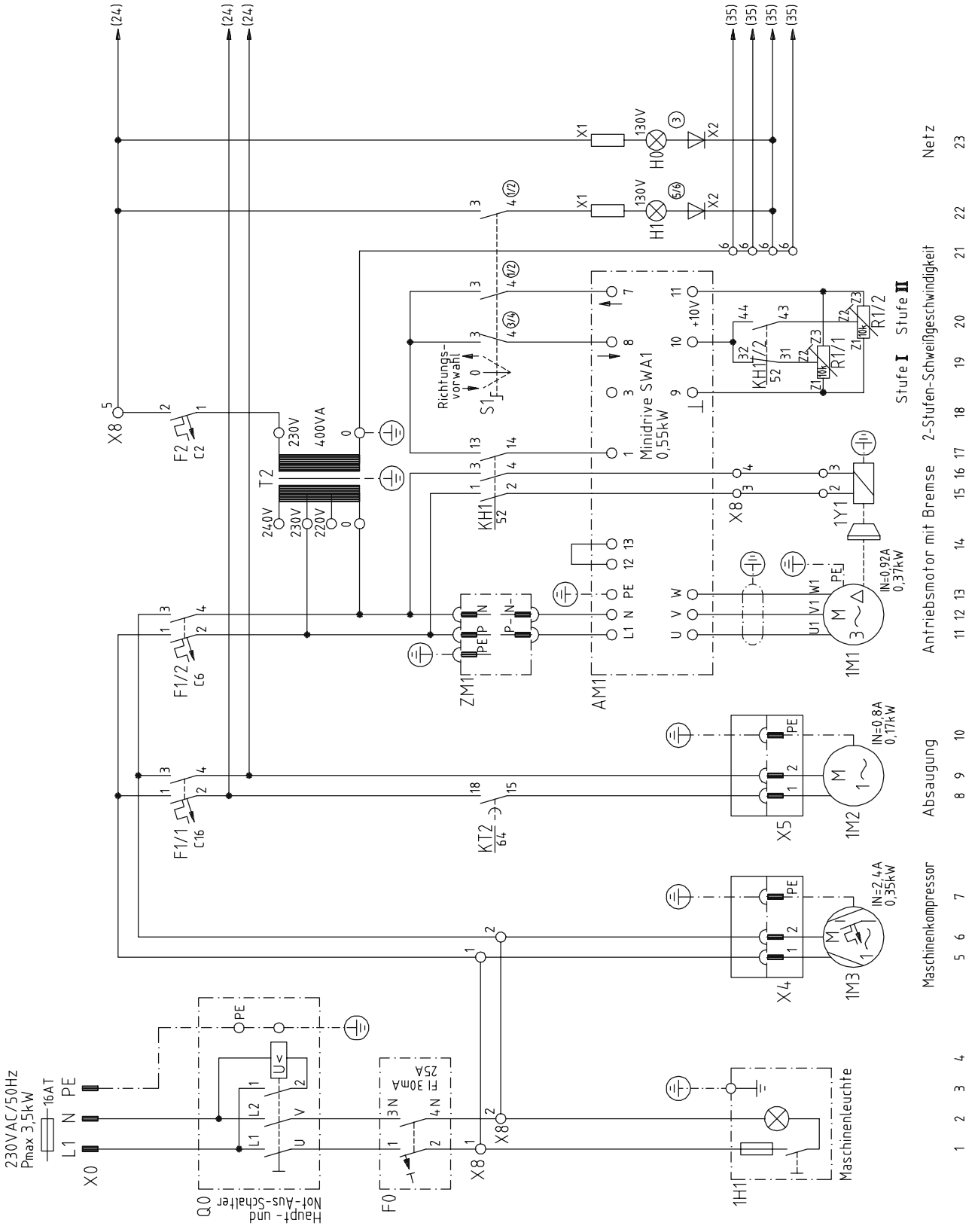

PFAFF 8309-023

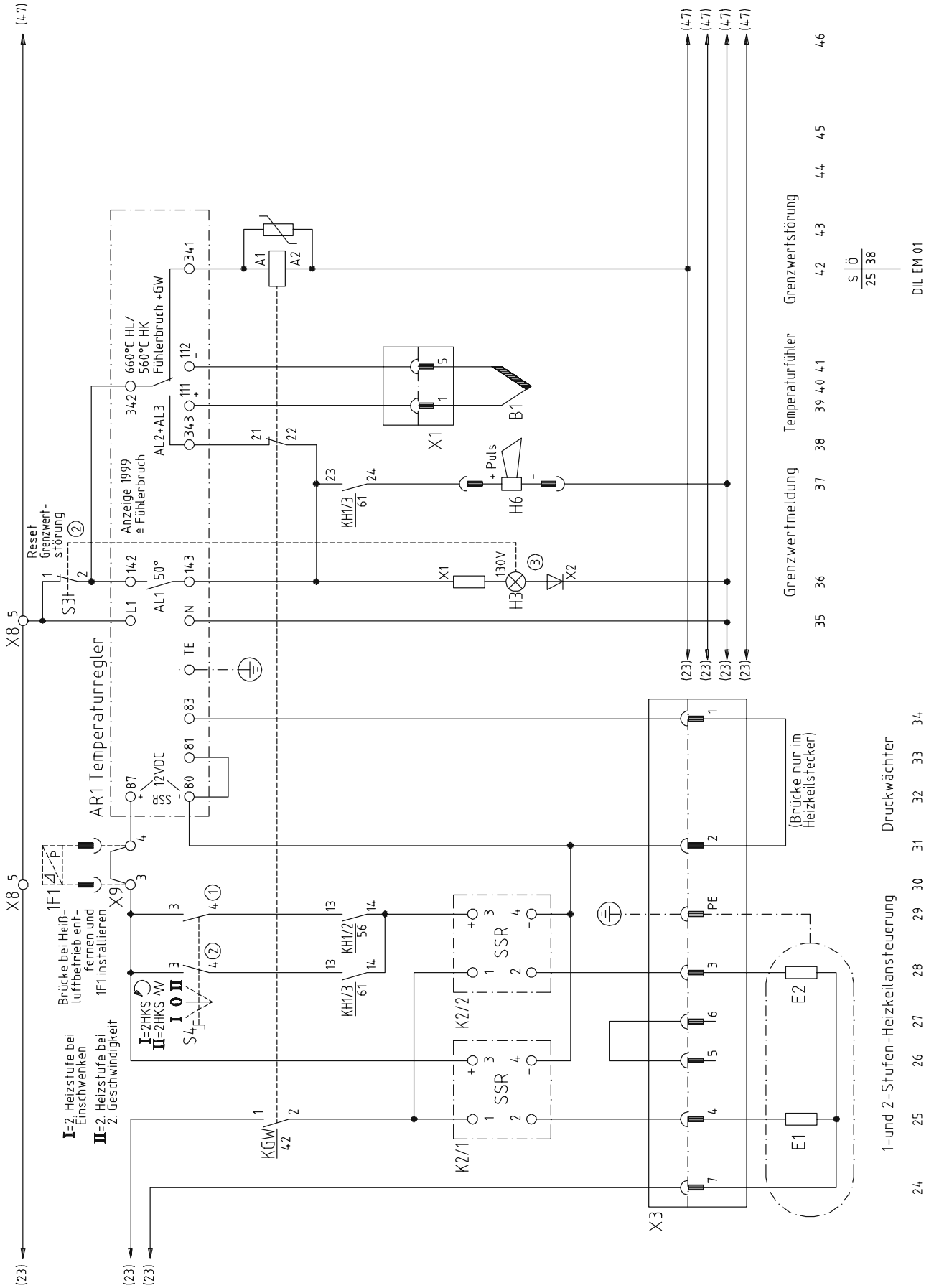

PFAFF 8309-023

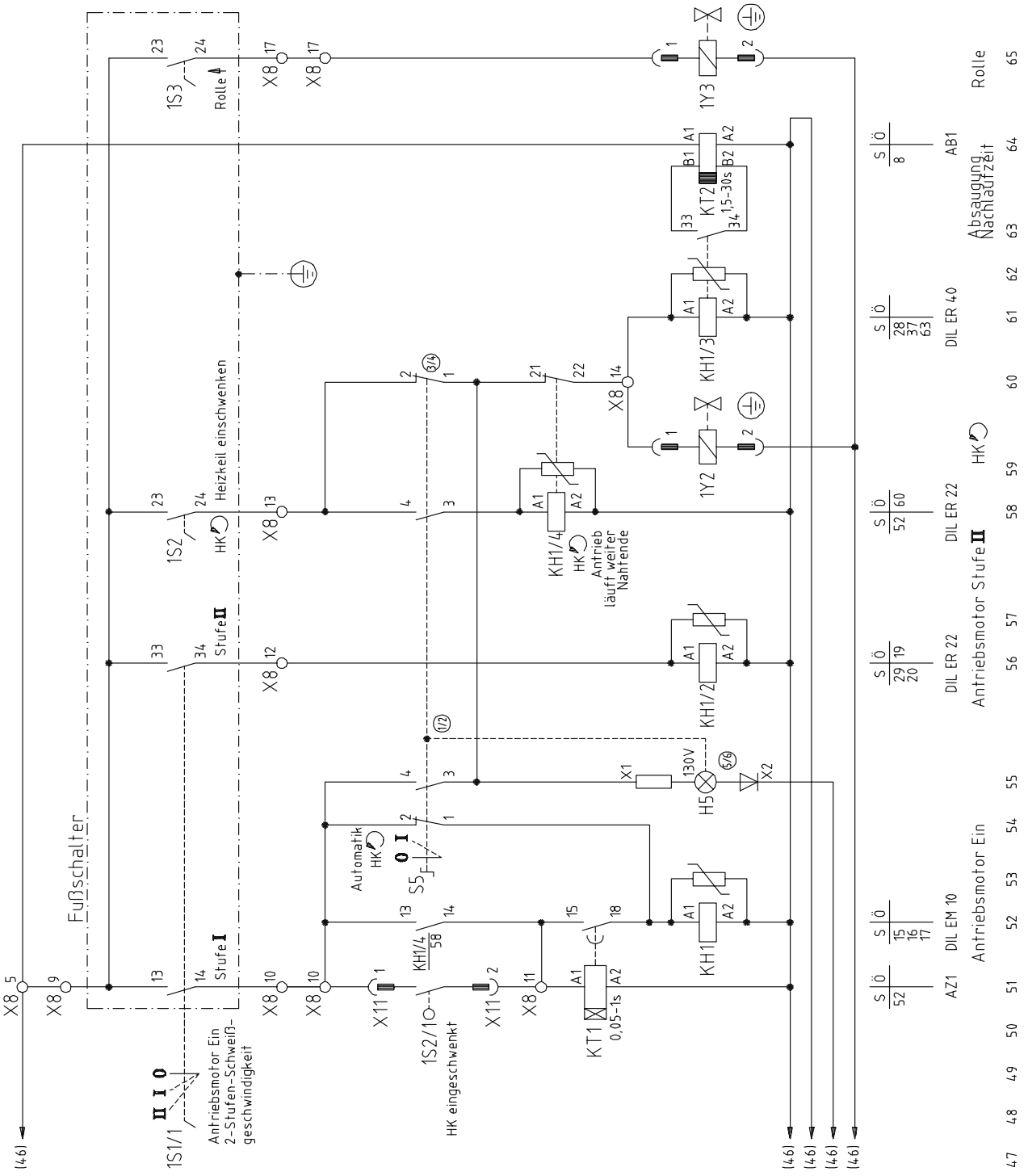

PFAFF 8309-026

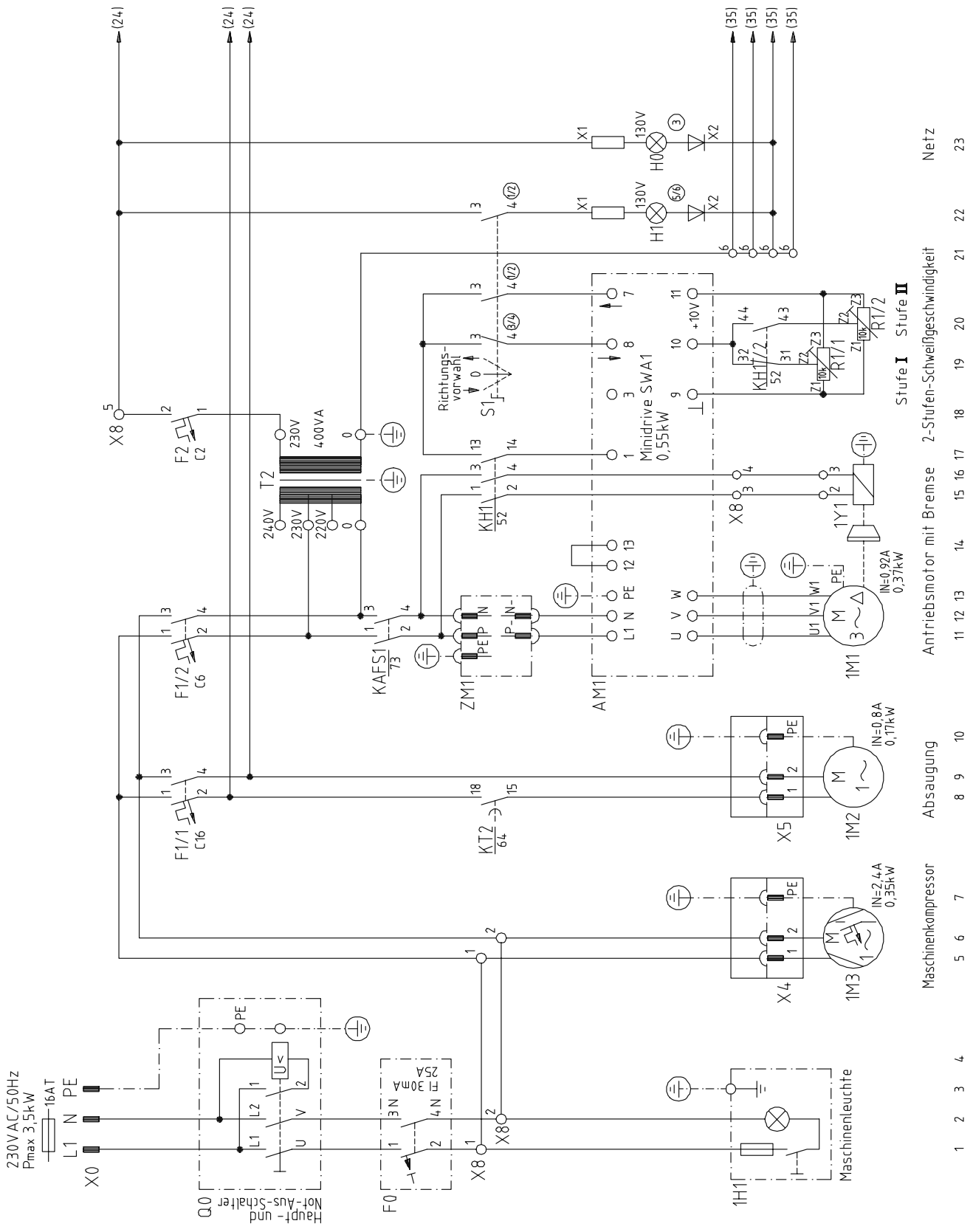

PFAFF 8309-026

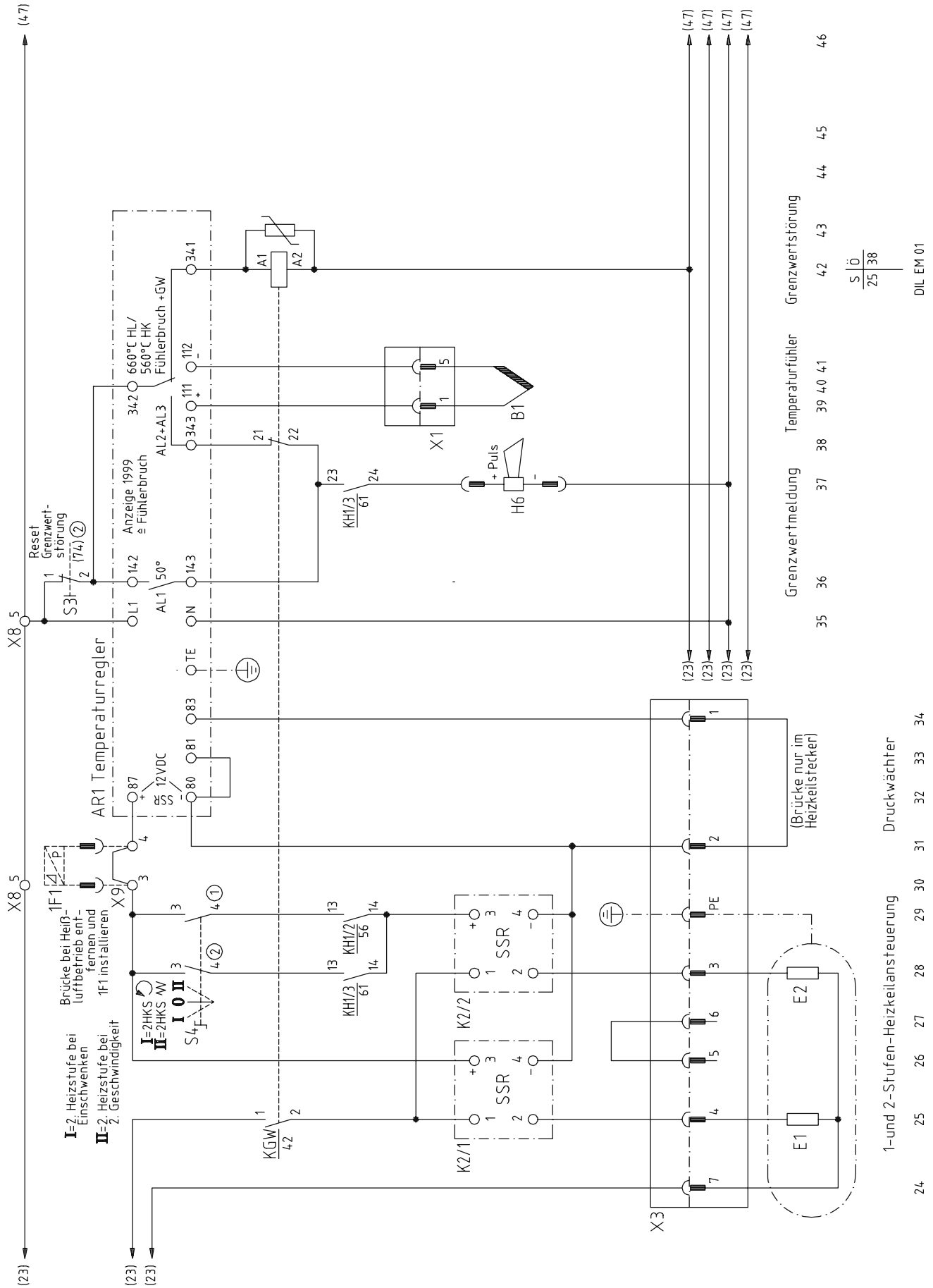

PFAFF 8309-026

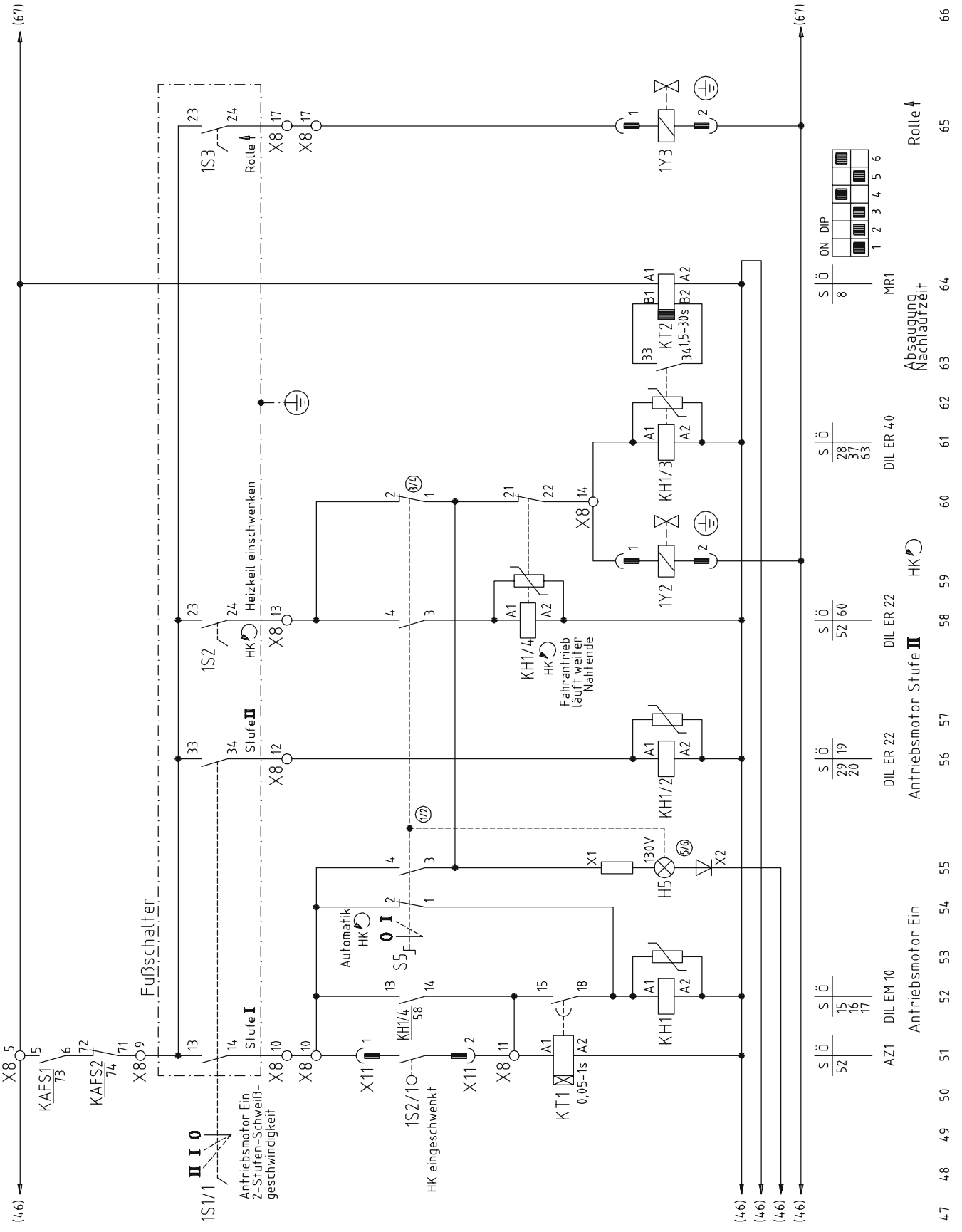

PFAFF 8309-026

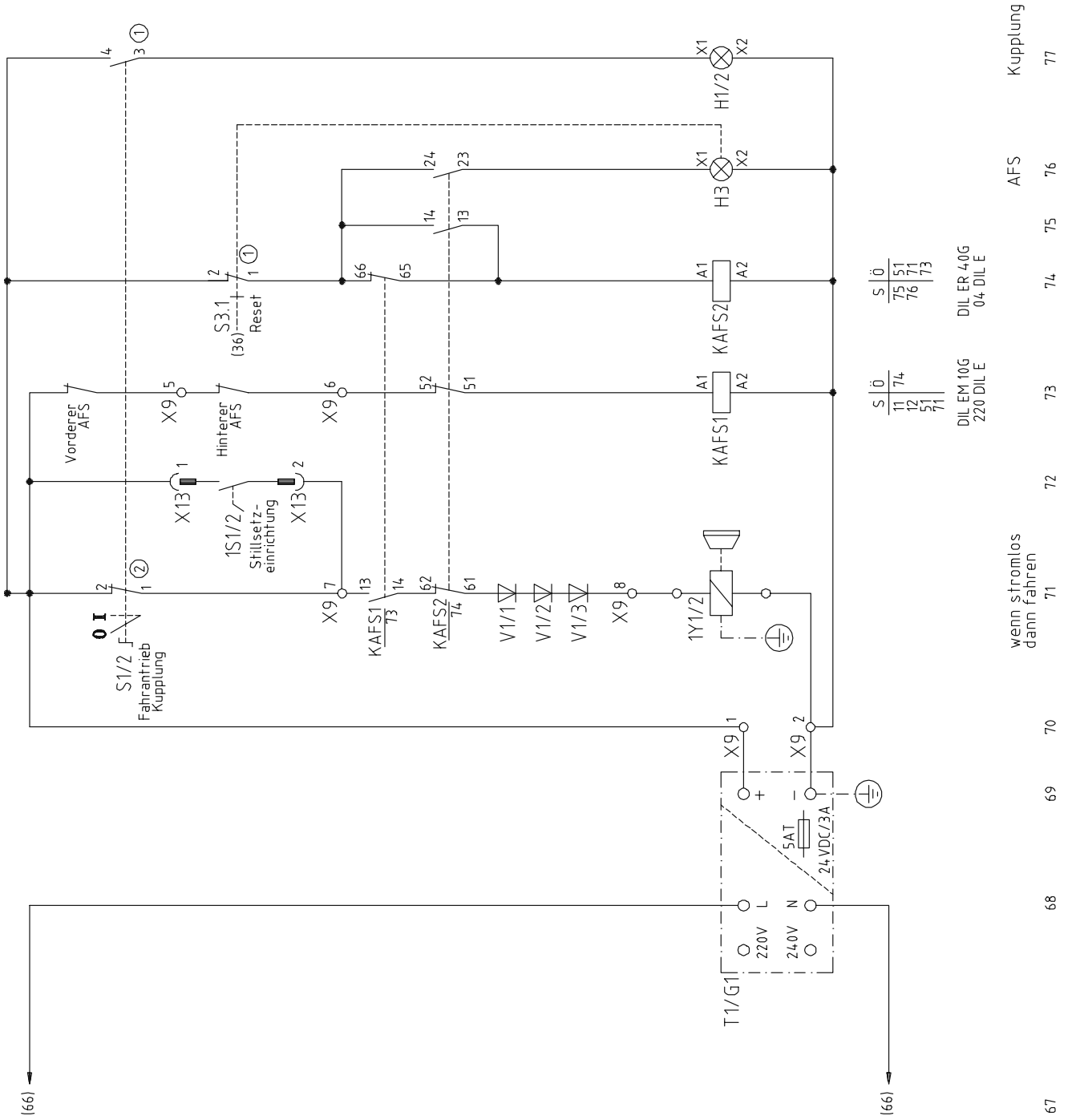

PFAFF® Industrial



Europäische Union
Wachstum durch Innovation – EFRE




PFAFF Industriesysteme
und Maschinen AG

Hans-Geiger-Str. 12 - IG Nord
D-67661 Kaiserslautern

Phone: +49-6301 3205 - 0
Fax: +49-6301 3205 1386
E-mail: info@pfaff-industrial.com

**Hotlines:**

| | |
|---|---|
| Technical service: | +49-175/2243-101 |
| Application consultance: | +49-175/2243-102 |
| Spare-parts hotline: | +49-175/2243-103 |

Printed in Germany

© PFAFF Industriesysteme und Maschinen AG 2009, PFAFF is the exclusive trademark of VSM Group AB.PFAFF Industriesysteme und Maschinen AG is an authorized licensee of the PFAFF trademark.