PFAFF® Industrial

8320 -010 -020

INSTRUCTION MANUAL

This instruction manual applies to machines from software version **0332/010** and serial number **2 708 363** onwards

296-12-18 585/002
Betriebsanleitung engl. 04.12



This Instruction Manual is valid for all models and subclasses listed in the chapter "Specifications".

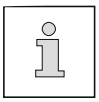

The parts list for the machines can be downloaded free of charge from the internet address
www.pfaff-industrial.com/pfaff/de/service/downloads.
As an alternative to the internet download the adjustment manual can also be ordered in book form under part no.296-12-18 585.

The reprinting, copying or translation of PFAFF Instruction Manuals, whether in whole or in part, is only permitted with our previous authorization and with written reference to the source.

PFAFF Industriesysteme
und Maschinen AG

Hans-Geiger-Str. 12 - IG Nord
D-67661 Kaiserslautern

Contents ..... Page

1	**Safety**	6
1.01	Directives	6
1.02	General notes on safety	6
1.03	Safety symbols	7
1.04	Important notes for the user	7
1.05	Operating and technical staff	8
1.05.01	Operating staff	8
1.05.02	Technical staff	8
1.06	Danger	9
2	**Proper use**	10
3	**Specifications**	11
3.01	Machine variants	12
4	**Disposal of Machine**	14
5	**Transportation, packing and storage**	15
5.01	Transportation to customer's premises	15
5.02	Transportation inside the customer's premises	15
5.03	Disposal of packing materials	15
5.04	Storage	15
6	**Explanation of symbols**	16
7	**Controls**	17
7.01	Summary of controls	17
7.02	Main switch	18
7.03	Pedal	18
7.04	Foot switch (optional)	19
7.05	Triple foot switch (optional)	19
7.06	Adjustment wheel for the roller clearance	20
7.07	Control panel	21
8	**Installation and commissioning**	22
8.01	Installation	22
8.02	Commissioning	23
8.03	Switching the machine on/off	24
8.04	Selecting the language and units	25
9	**Preparation**	26
9.01	Adjusting the feed roller clearance	26
9.02	Selecting the production type:	27
9.03	Entering the sealing parameters (Manual Heat Sealing)	29
9.03.01	Entering the sealing temperature	31
9.03.02	Entering the sealing speed	32
9.03.03	Stipulating the hot wedge type (only on the PFAFF 8320-010)	34
9.03.04	Adjusting the contact pressure of the hot wedge (only on the PFAFF 8320-010)	34
9.03.05	Stipulating the nozzle type and hot air volume (only on the PFAFF 8320-020)	35
9.03.06	Entering the roller pressure	36

Contents ..... Page

9.04 Adjusting the control panel 37

10 Heat sealing 38
10.01 Heat sealing principle 38
10.02 Manual heat sealing 39
10.03 Creating/editing a heat sealing program 41
10.03.01 Notepad 42
10.03.02 Basic functions for the program input 43
10.03.03 Sealing parameters 44
10.03.04 Functions for switching to other zones 45
10.03.05 Entering further sealing parameters 46
10.03.06 Concluding programming 47
10.03.07 Example of how to enter a sealing program 48
10.04 Programmed heat sealing with individual programs 52
10.05 Creating/processing sequences 53
10.06 Programmed heat sealing with sequences 54
10.07 Error messages 56

11 Input 57
11.01 Summary of the functions in the input mode 57
11.02 Program management 59
11.03 Further settings 61
11.03.01 Feed roller parameters 63
11.03.02 Rights of access 64
11.04 Installation and commissioning 66
11.04.01 8320-010 (Hot wedge sealing machine) 66
11.04.02 8320-020 (Hot air sealing machine) 68
11.05 Advanced programming 70
11.05.01 Manual datasets (recipes) 70
11.05.02 Stop with light barrier 73
11.05.03 Start with light barrier 73
11.05.04 Connecting the external puller 95-256 400-90 with DC motor 74

12 Care and Maintenance 76
12.01 Servicing and maintenance intervals 76
12.02 Cleaning 76
12.03 Checking/adjusting the air pressure 77
12.04 Cleaning the air filter of the air-filter/lubricator 77
12.05 Grinding the hot wedge (only on the PFAFF 8390-010) 78

13 Adjustment 79
13.01 Notes on adjustment 79
13.02 Tools, gauges and other accessories 79
13.03 Changing the feed rollers 80
13.04 Adjusting the feed rollers 81
13.05 Swinging the post into position 82
13.06 Changing the hot wedge (only on the PFAFF 8320-010)) 83

Contents .....Page

13.07	Adjusting the hot wedge on the PFAFF 8320-010	84
13.07.01	Positioning the hot wedge crosswise to the feed direction	84
13.07.02	Adjusting the height and counter-balancing the weight of the hot wedge	85
13.07.03	Hot wedge to feed roller clearance and contact pressure	86
13.08	Adjusting the hot air nozzle on the PFAFF 8320-020	87
13.08.01	Lateral adjustment and setting the angle of the hot air nozzle	87
13.08.02	Adjusting the height and feed roller clearance of the hot air nozzle	88
13.09	Changing the heating cartridge (only on the PFAFF 8320-020)	89
13.10	Changing the temperature sensor (only on the PFAFF 8320-020))	90
13.11	Protective switch and boot key	91
13.12	Service menu	92
13.12.01	Machine configuration	93
13.12.02	Loading/updating the operating program with SD-Card	95
13.13	Description of the error numbers	97
13.13.01	General errors	97
13.13.02	Temperature control error	98
13.13.03	DC-motors error (Feed rollers)	99
13.14	List of outputs and inputs	100
13.14.01	Digital Outputs	100
13.14.02	Digital Inputs	100
13.14.03	Analog Outputs	101
13.14.04	Analog Inputs	101
13.15	Parameter settings	102
13.15.01	Selection and changing parameters	102
13.15.02	List of parameters	103
14	**Circuit diagrams**	**104**
15	**Pneumatic-circuit diagrams**	**109**

1 Safety

1.01 Directives

This machine is constructed in accordance with the European regulations indicated in the conformity and manufacturer's declarations.
In addition to this instruction manual, please also observe all generally accepted, statutory and other legal requirements, including those of the user's country, and the applicable pollution control regulations! The valid regulations of the regional social insurance society for occupational accidents or other supervisory authorities are to be strictly adhered to!

1.02 General notes on safety

- The machine may only be operated by adequately trained operators and only after these have read the appropriate Instruction Manual!
- The danger and safety instructions attached to the machine must be followed!
- The machine may only be used for the purpose intended and may not be operated without its safety devices. All relevant safety regulations must be adhered to.
- When changing the feed rollers or the hot air nozzle, when leaving the machine unattended or during maintenance work, the machine must be disconnected from the power supply by operating the main switch or by pulling out the plug!
- The daily maintenance work may only be carried out by appropriately trained personnel!
- During repair and maintenance work on pneumatic devices the machine must be disconnected from the pneumatic supply system! The only exceptions permitted are during adjustment work and function tests carried out by appropriately trained personnel!
- Repairs and special maintenance work may only be carried out by qualified service staff or appropriately trained personnel!
- Work on electrical equipment may only be carried out by appropriately trained personnel!
- Work is not permitted on parts and equipment which are connected to the power supply! Exceptions to this rule are found in the regulations EN 50110.
- Modifications and alterations to the machine may only be carried out under observance of all the relevant safety operations!
- Only spare parts which have been approved by us are to be used for repairs! We draw special attention to the fact that spare parts and accessories not supplied by us have not been subjected to testing nor approval by us. Fitting and/or use of any such parts may cause negative changes to the design characteristics of the machine. We shall not accept any liability for damage caused by the use of non-original parts.

1.03 Safety symbols



Danger!
Special points to observe.



Danger of hands being crushed!



Danger of burns from hot surface!



Danger from electric voltage!

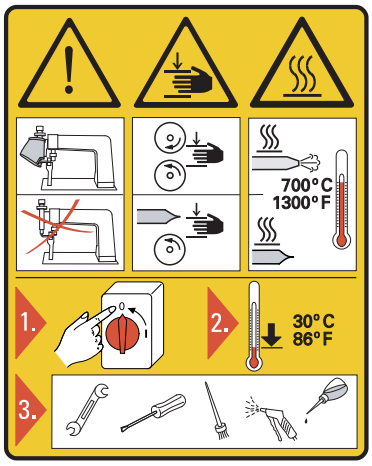

Caution

Do not operate without finger guard and safety devices.

Turn off the main switch and let the **machine cool down** before any setting up, maintenance or cleaning work!

1.04 Important notes for the user

- This instruction manual belongs to the equipment of the machine and must be available to the operating staff at all times.
- This instruction manual must be read before the machine is operated for the first time.
- Both operating and technical staff must be instructed on the safety devices of the machine and on safe working methods.
- It is the duty of the user to operate the machine in perfect running order only.
- The user must ensure that none of the safety devices are removed nor put out of working order.
- The user must ensure that only authorized persons operate and work on the machine.
- The user must make sure there is no high-frequency welding equipment being operated in direct proximity to the machine that exceeds the EMC limit values according to **EN 60204-31** for the machine.

For further information please refer to your PFAFF agency.

1.05 Operating and technical staff

1.05.01 Operating staff

Operating staff are the persons responsible for setting up, operating and cleaning the machine and for removing any disturbances in the sewing area.

The operating staff is obliged to observe the following points, and must:

- always observe the notes on safety in this instruction manual!
- avoid using any working methods which adversely affect the safety of the machine!
- avoid wearing loose-fitting clothing or jewelry such as necklaces or rings!
- also ensure that only authorized persons are allowed near the danger area of the machine!
- immediately report to the user any changes to the machine that may affect its safety!

1.05.02 Technical staff

Technical staff are persons who have been trained in electrical engineering, electronics and mechanical engineering. They are responsible for lubricating, servicing and repairing the machine.

The technical staff is obliged to observe the following points, and must:

- always observe the notes on safety in this instruction manual!
- switch off the on/off switch before carrying out any maintenance and repair work on the machine!
- never work on parts or equipment still connected to the power supply! Exceptions to this are only permissible according to regulations EN 50110.
- replace all safety covers after maintenance and repair work!

1.06 Danger

When the machine is in operation, a work area of **1** m must be kept free in front of and behind the machine, so that access to the machine is possible at all times without difficulty.

If toxic vapours occur during processing, use extractor!
Danger to health if the toxic vapours are inhaled!

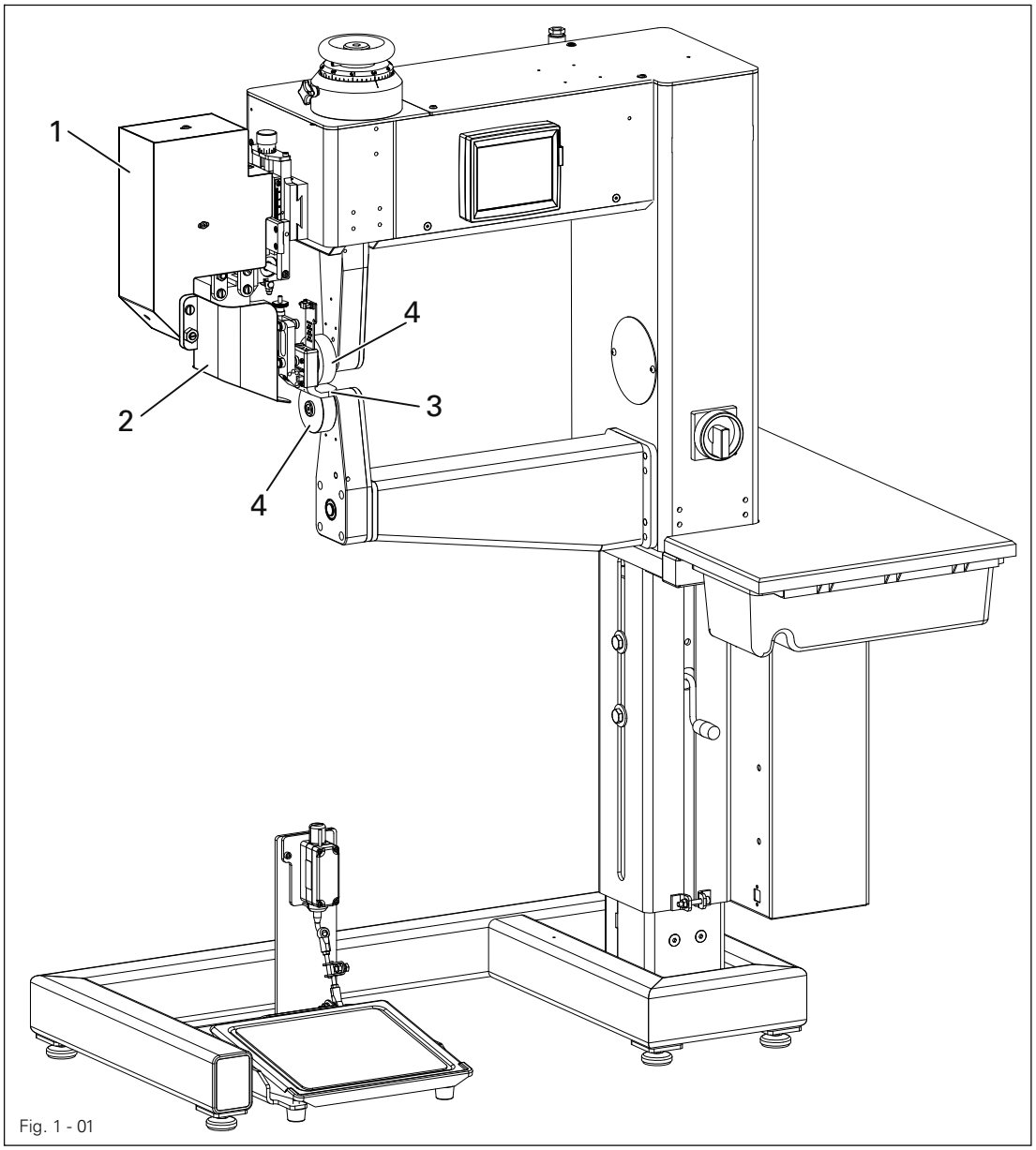

Fig. 1 - 01

Do not operate the machine without protective cover **1** and only operate the machine with protective cover **2** folded down. Danger of crushing when the heating element **3** is engaged and disengaged, as well as a danger of burns if touched!

During operation do not place hands near the feed rollers **4**!
Danger of crushing if the fingers are drawn between the rollers!

2 Proper use

The PFAFF 8320-010 is a hot-wedge sealing machine with swivel post.
The PFAFF 8320-020 is a hot-air sealing machine with swivel post.

The machines are used to seal flexible thermoplastic materials such as e.g. covers, PVC clothing, insulating and filter tubes, small tarpaulins and tents, motorcycle seats etc.



Any and all uses of this machine which have not been approved of by the manufacturer are considered to be inappropriate! The manufacturer cannot be held liable for any damage caused by the inappropriate use of the machine! The appropriate use of the machine includes the observance of all operational, adjustment, maintenance and repair measures required by the manufacturer!

3 Specifications▲

Dimensions and weight:
Length: ..... ca. 1100 mm
Width: ..... ca. 620 mm
Height: ..... ca. 1400 mm
Clearance width: ..... ca. 480 mm
Clearance between rollers: ..... ca. 20 mm

Net weight: ..... ca. 140 kg

Mains voltage set for: ..... 230 V ± 10%, 50/60 Hz, 1 phase
Leakage current ..... ≤ 5 mA◆

Power input
8320-010 (hot-wedge version): ..... ca. 1500 W
8320-020 (hot-air version): ..... ca. 3500 W

Heating capacity
8320-010 (hot-wedge version): ..... ca. 1500 W
8320-020 (hot-air version): ..... ca. 3300 W

Fuse: ..... 16 A

Working air pressure: ..... min. 5 bar

Air consumption
8320-010 (hot-wedge version): ..... 30 l/min
8320-020 (hot-air version): ..... 30 – 150 l/min

Sealing speed: ..... max. 10 m/min.*

Noise data:
Emission sound level at the workplace: ..... L_{pA}<70 dB(A)■
(Noise measurement in acc. with DIN 45 635-48-A-1, ISO 11204, ISO 3744, ISO 4871)

Ambient temperature
85% rel. humidity (condensation not permitted): ..... 5 – 40°C

Sealing temperature
8320-010 (hot-wedge version): ..... max. 500°C
8320-020 (hot-air version): ..... max. 650°C

▲ Subject to alterations

◆ Due to the use of network filters there is a nominal leakage current of ≤ 5 mA.

* Depending on the equipment, up to 30 m/min

■ K_{pA} = 2,5 dB

3.01 Machine variants

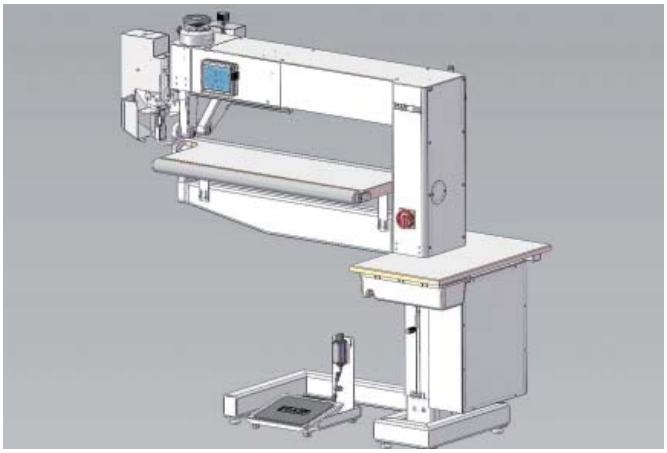

PFAFF 8310-111
PFAFF 8320-121

Long-arm version with table, track rollers and puller

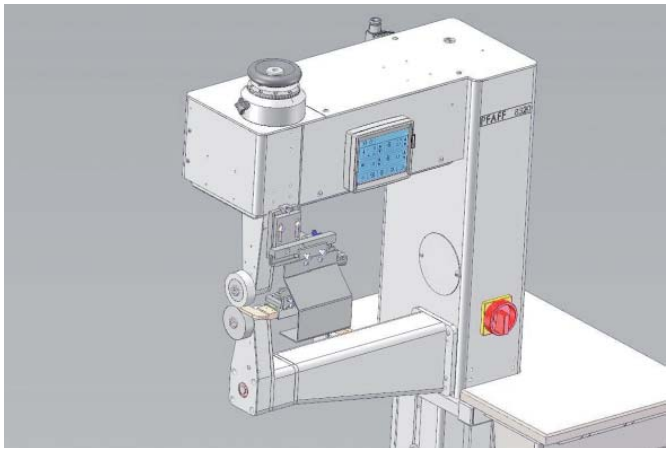

PFAFF 8310-011
PFAFF 8320-021

Standard machine housing, vertical post, swinging unit from the right

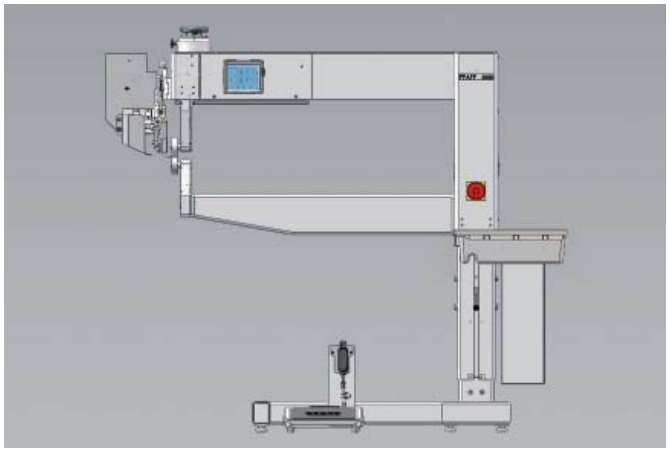

PFAFF 8310-111
PFAFF 8320-121

Long-arm version, vertical post

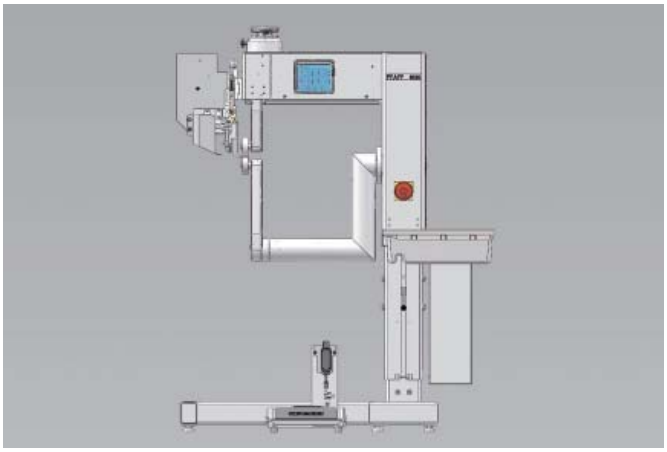

PFAFF 8310-010
PFAFF 8320-020

Standard machine housing, swivel post

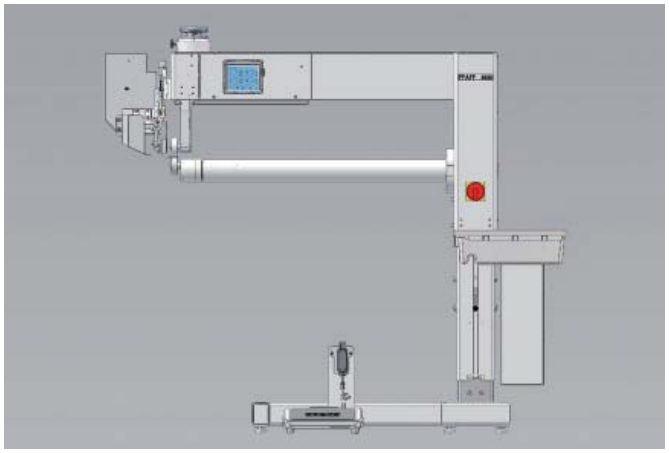

PFAFF 8310-112
PFAFF 8320-122

Long-arm version, cylinder post

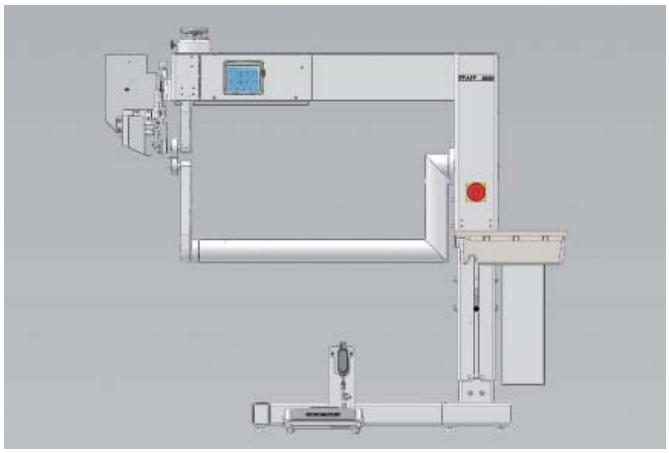

PFAFF 8310-110
PFAFF 8320-120

Long-arm version, swivel post

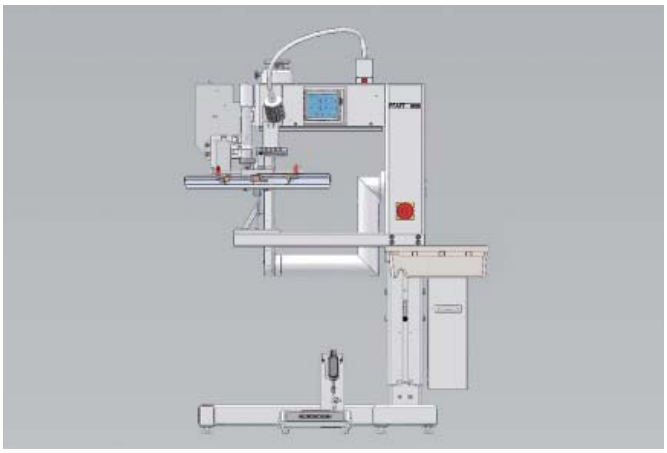

PFAFF 8310-061
PFAFF 8320-061

Standard machine housing for filter tube production (hot-air)

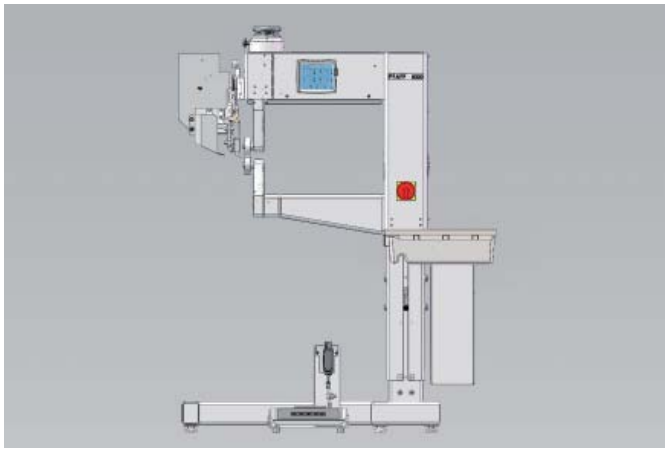

PFAFF 8310-011
PFAFF 8320-021

Standard machine housing, vertical post

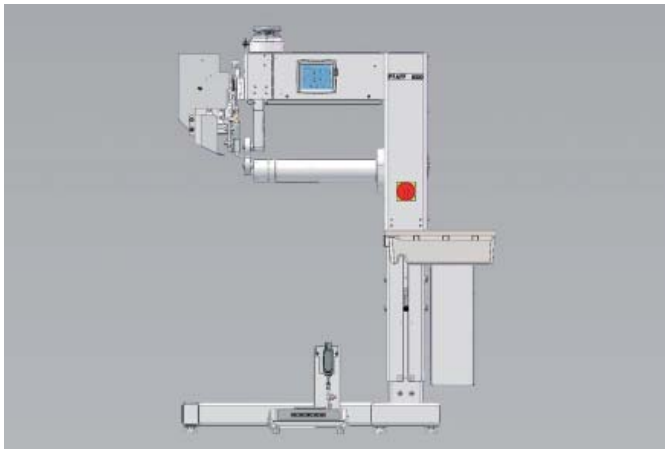

PFAFF 8310-012
PFAFF 8320-022

Standard machine housing, cylinder post

4 Disposal of Machine

- Proper disposal of the machine is the responsibility of the customer.
- The materials used for the machine are steel, aluminium, brass and various plastic materials. The electrical equipment comprises plastic materials and copper.
- The machine is to be disposed of according to the locally valid pollution control regulations; if necessary, a specialist ist to be commissioned.



Care must be taken that parts soiled with lubricants are disposed of separately according to the locally valid pollution control regulations!

5 Transportation, packing and storage

5.01 Transportation to customer‘s premises

The machines are delivered completely packed.

5.02 Transportation inside the customer‘s premises

The manufacturer cannot be made liable for transportation inside the customer‘s premises nor to other operating locations. It must be ensured that the machines are only transported in an upright position.

5.03 Disposal of packing materials

The packing materials of this machine comprise paper, cardboard and VCE fibre. Proper disposal of the packing material is the responsibility of the customer.

5.04 Storage

If the machine is not in use, it can be stored as it is for a period of up to six months, but It should be protected against dust and moisture.
If the machine is stored for longer periods, the individual parts, especially the surfaces of moving parts, must be protected against corrosion, e.g. by a film of oil.

6 Explanation of symbols

In this instruction manual, work to be carried out or important information is accentuated by symbols. These symbols have the following meanings:



Note, information



Cleaning, care



Lubrication

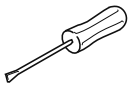

Maintenance, repairs, adjustment, service work
(only to be carried out by technical staff)

7 Controls

7.01 Summary of controls

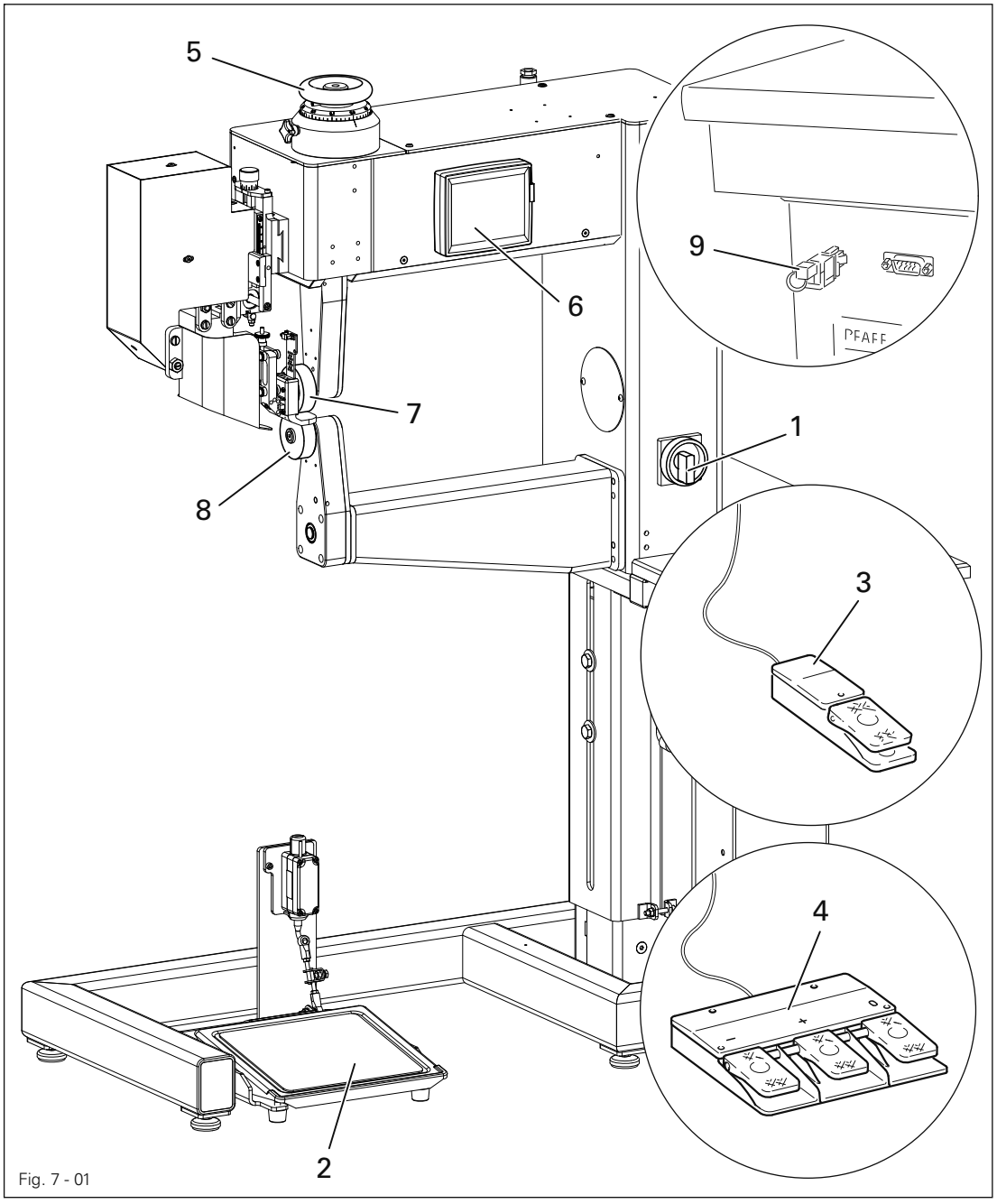

Fig. 7 - 01

1 Main switch, see Chapter **7.02**
2 Pedal, see Chapter **7.03**
3 Foot switch (available as an option), see Chapter **7.04**
4 **Triple** foot switch (available as an option), see Chapter **7.05**
5 Adjustment wheel for roller clearance, see Chapter **7.06**
6 Control panel, see Chapter **7.08**
7 Top feed roller
8 Bottom feed roller
9 Key-switch, see Chapter **11.03.02** Rights of access

7.02 Main switch

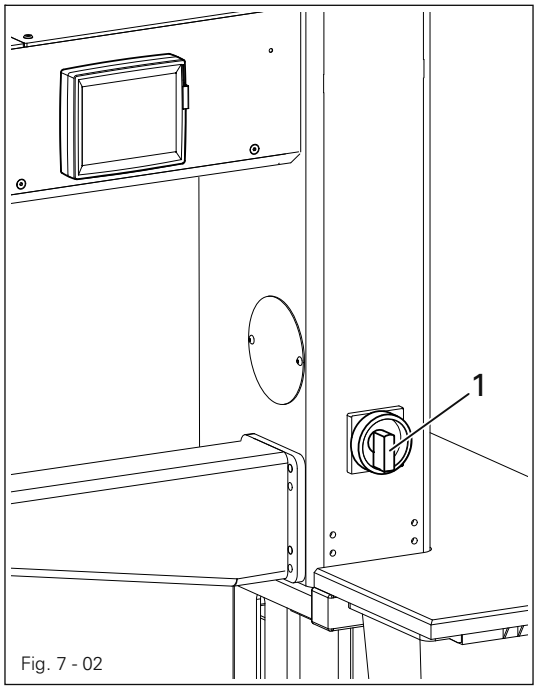

Fig. 7 - 02

- The machine is switched on or off by turning main switch **1**.

Position "**0**" : Machine is switched off
Position "**1**" : Machine is switched on

When switching the machine on or off, please observe the notes in Chapter **8.03 Switching the machine on and off**!

7.03 Pedal

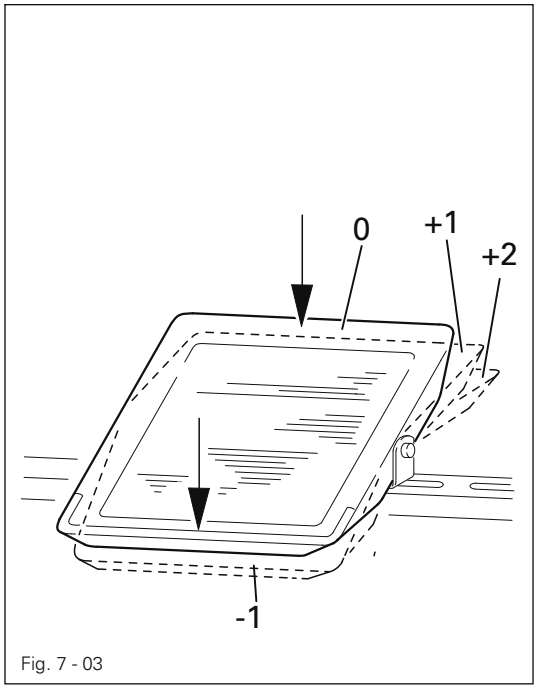

Fig. 7 - 03

The function method of the pedal depends on the selected pedal mode (level or flip-flop mode), see **Chapter 11.03 Further settings**

Sealing / level mode
0 = Rest position / Stop sealing process
+1 = Lower top feed roller
+2 = Engage heating element / Sealing start
-1 = Interrupt sealing process / Raise top feed roller

Sealing / flip-flop mode
0 = Rest position
+1 = Lower top feed roller
+2 = Start / Stop sealing
-1 = Interrupt sealing process / Raise top feed roller

7.04 Foot switch (optional)

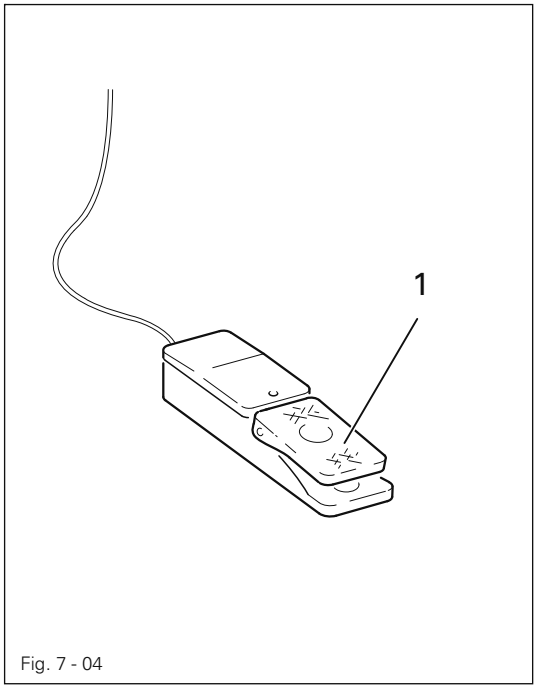

Fig. 7 - 04

- Move to the next sealing section in the programmed sealing operation by pressing foot switch 1.

Alternatively, a knee switch can be ordered for this function.

7.05 Triple foot switch (optional)

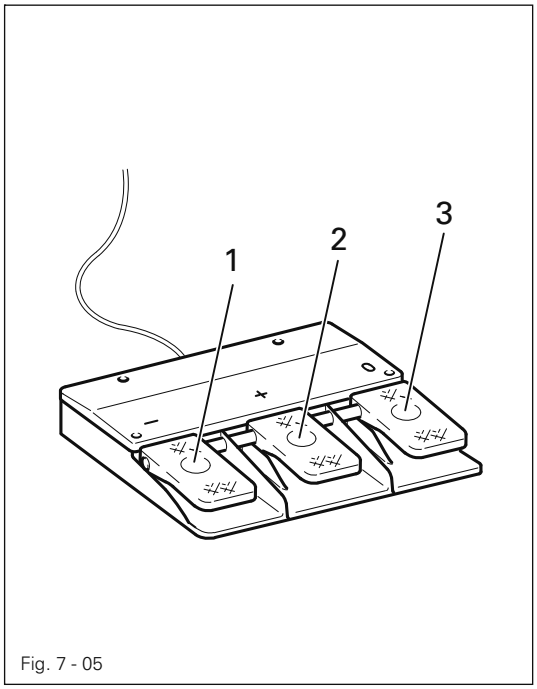

Fig. 7 - 05

- If the foot switches 1 to 3 are pressed, the value for the speed difference between the top and bottom feed roller is changed step by step or reset.

1 = Reduce speed of top feed roller step by step
2 = Increase speed of top feed roller step by step.
3 = Reset speed difference between the top and bottom feed rollers.

The speed difference between top and bottom feed rollers is shown in % on the control panel.

7.06 Adjustment wheel for the roller clearance

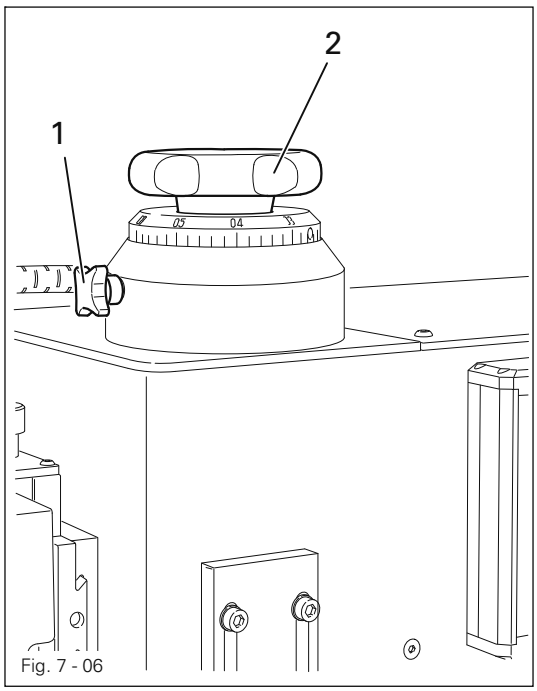

Fig. 7 - 06

- After loosening clamp screw **1**, the clearance between the top and bottom feed rollers is changed by turning adjustment wheel **2**.
  The clearance can be read on the scale.

7.07 Control panel

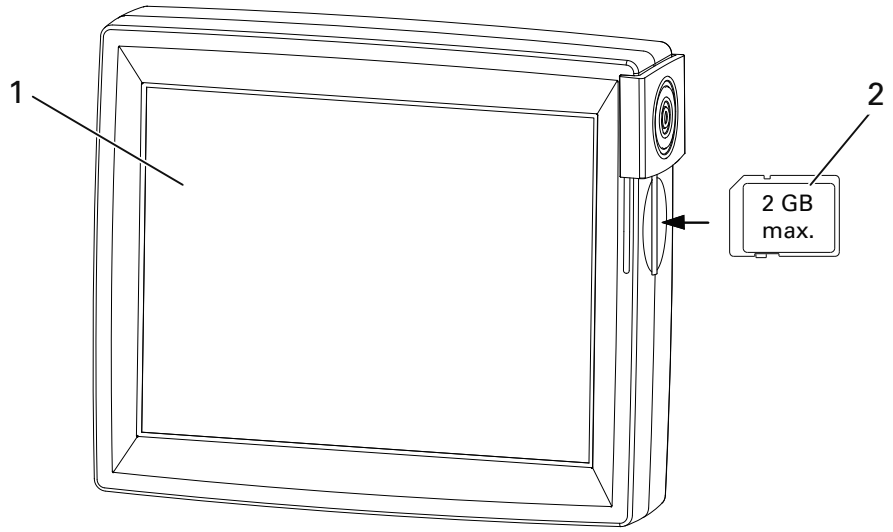

Fig. 7 - 07

The current operating conditions are displayed on control panel **1**. Operation takes place in a constant dialogue between the control unit and the operator. For this purpose, depending on the operating condition of the machine, different symbols and/or texts are displayed. If the symbols or texts are framed, these show functions which can be selected by pressing the appropriate position on the monitor. By pressing the corresponding function this is carried out or switched on or off immediately, or a further menu appears, e.g. for entering a value. Activated functions are shown with inverted symbols. Unframed symbols or texts are only used for display purposes and cannot be selected by pressing.
To read welding programs or install machine software, use the sd-card **2** in the control panel.

Description of the functions

Normal symbol = function switched off (inactive)

Inverted symbol = function switched on (active)

8 Installation and commissioning

After the machine has been unpacked, check it for any damages caused during transportation. If there are any damages, please notify the transport company and your local PFAFF agency.

The machine must only be installed and commissioned by qualified personnel. All relevant safety regulations must be strictly adhered to!

8.01 Installation

Suitable connections for electricity and compressed air must be available at the machine's location (see **Chapter 3 Specifications**).

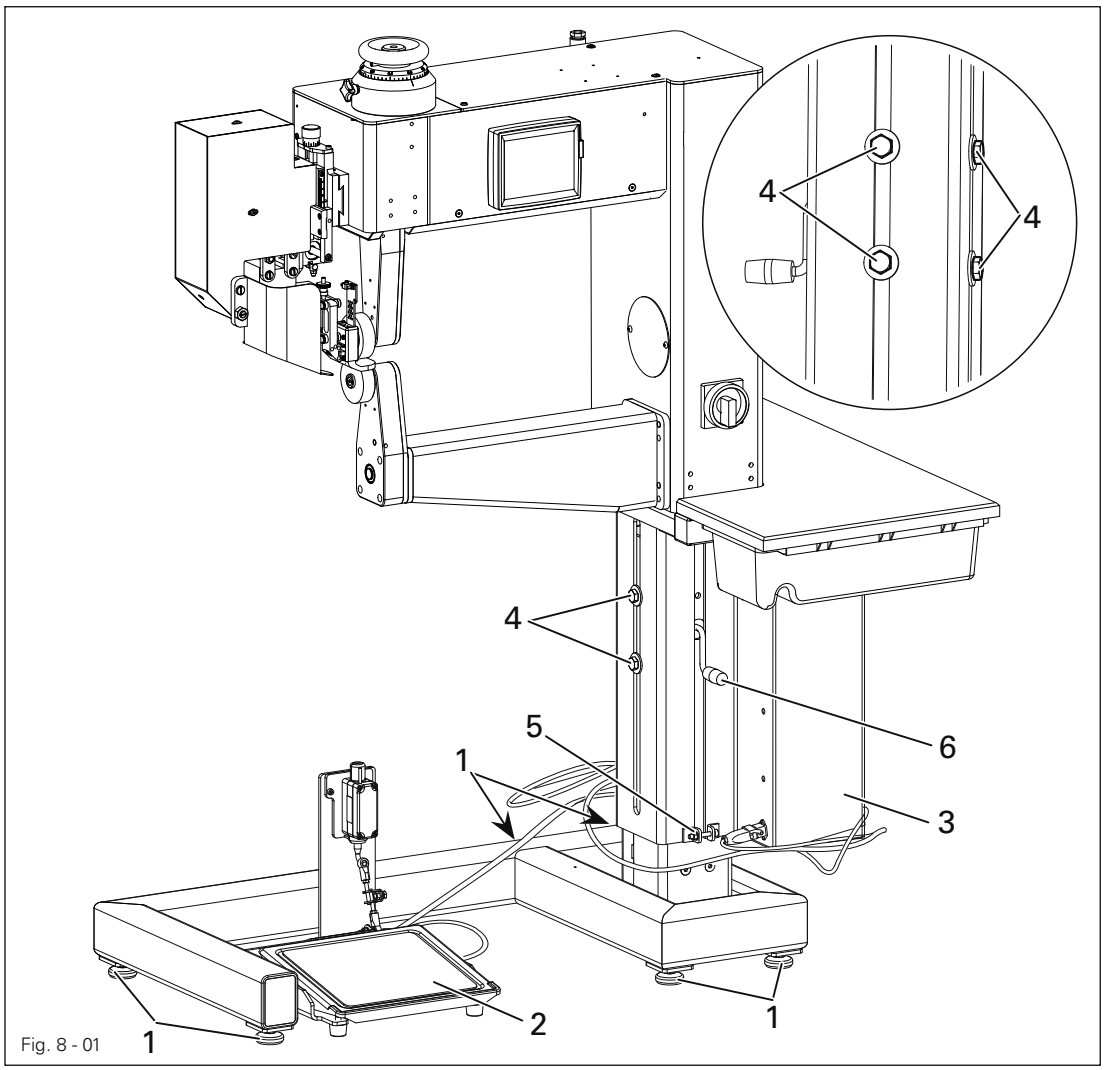

Fig. 8 - 01

- Slide the machine from the transport pallet.
- Level the machine horizontally by turning the feet **1**.
- Connect the plugs from pedal **2** and any existing foot switches to the control box.
- Loosen screws **4** and **5** and adjust the height of the machine by turning crank **6**.
- Well tighten screws **4** and **5** again.

8.02 Commissioning

- Examine the machine, in particular the electric leads, for any damage.
- Clean the machine thoroughly, also see **Chapter 12 Maintenance**.
- Connect the machine to the electrical network and have specialists examine, whether the machine can be operated with the available voltage and whether it is properly connected.



Do not operate the machine if there is any discrepancy!



The machine may only be connected to an earthed socket!

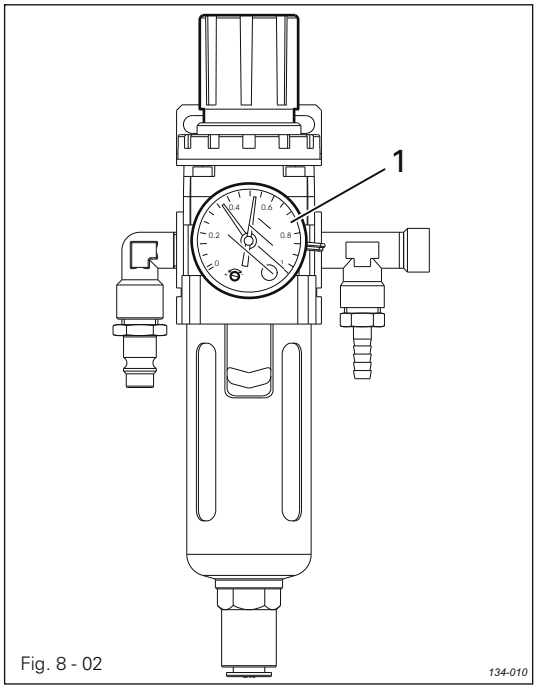

Fig. 8 - 02

- Connect the machine to the compressed air system. A pressure of **6 bar** should be displayed on the manometer. If necessary, set this value, see **Chapter 12.02 Checking / adjusting the air pressure.**

8.03 Switching the machine on/off

- To switch on the machine, turn the main switch to the "I" position, see Chapter 7.02 Main switch.

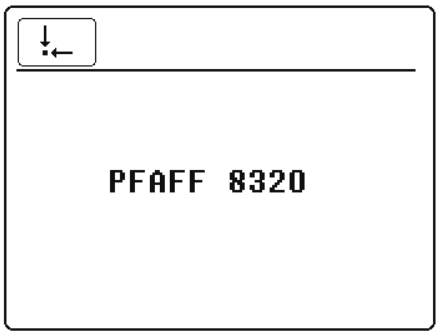

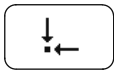

- After the boot operation of the control unit, call up the "basic position" function.

PFAFF 8320-010

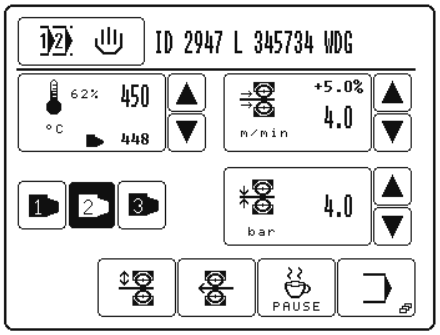

PFAFF 8320-020

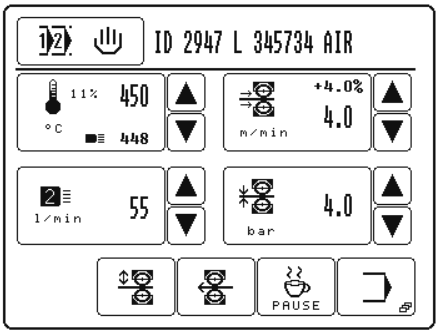



- To switch off the machine, call up the "pause" function and wait until the blast air switches off automatically (approx. 1 - 2 min).

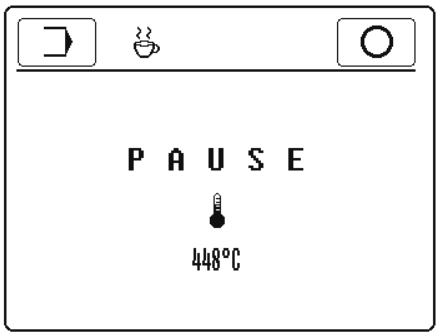



Danger of damage to the heating cartridge!
The hot air temperature must not exceed 100°C when switched off!
Before switching off the compressed air system, wait until the blast air switches off automatically!

- Turn the main switch to the "0" position, see Chapter 7.02 Main switch.

8.04 Selecting the language and units

- Switch on the machine.



- Call up the input menu.

PFAFF 8320-010

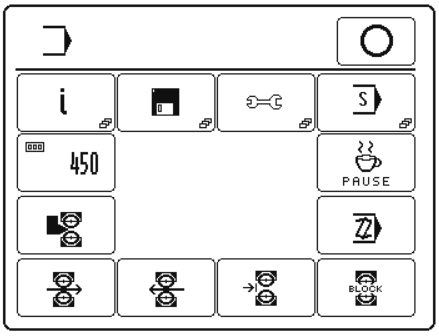

PFAFF 8320-020

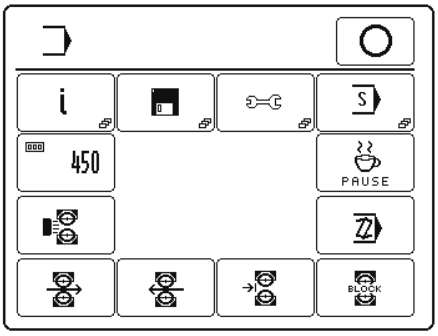

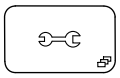

- Call up the settings menu.

PFAFF 8320-010

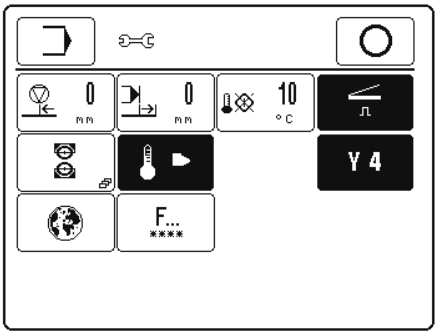

PFAFF 8320-020

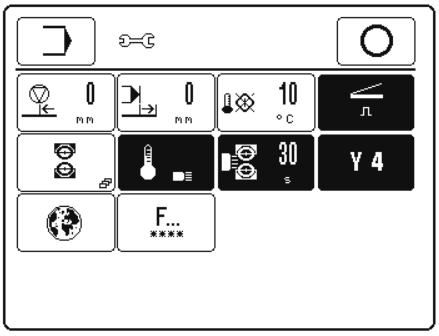



- Call up the "language setting" menu.

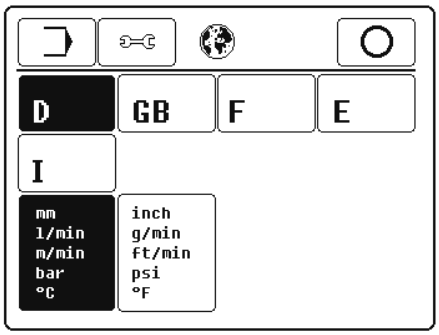

- Select the appropriate language and units.

9 Preparation

All regulations and notes in this Service Manual must be observed!
Special attention must be paid to the safety regulations!

All setting-up work must only be carried out by personnel with the appropriate training!

9.01 Adjusting the feed roller clearance

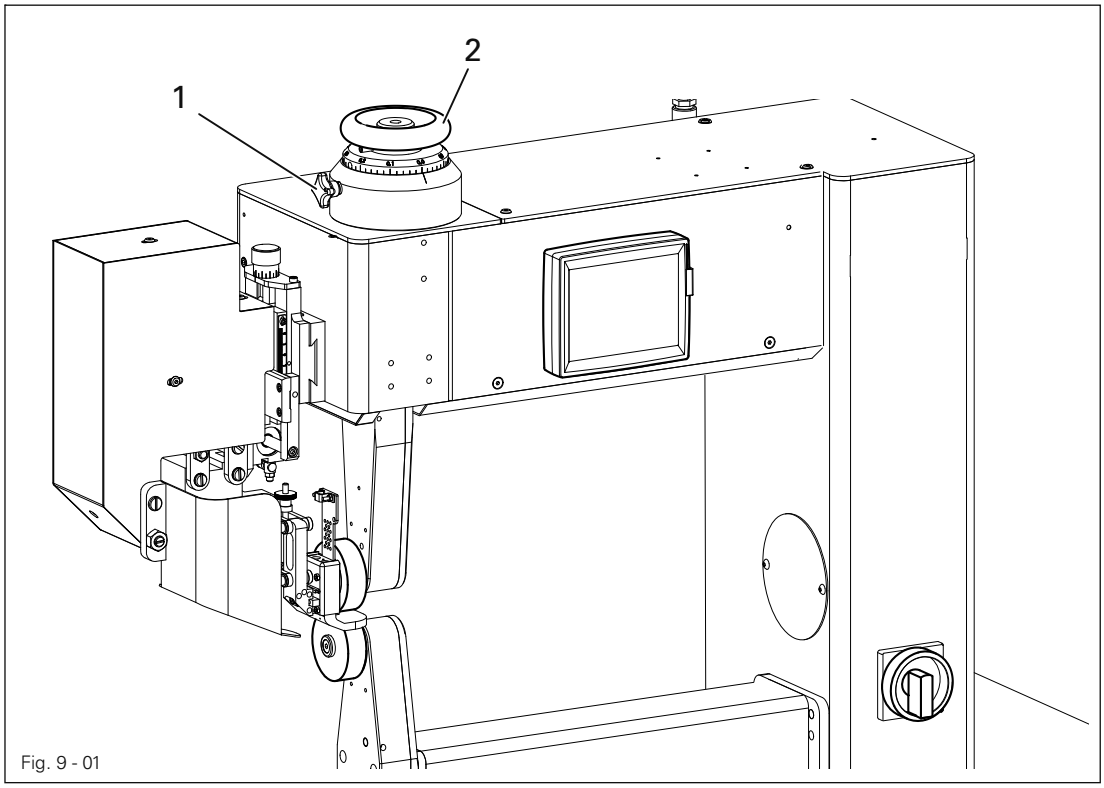

Fig. 9 - 01

- Switch on the machine.
- Lower the top feed roller.
- Loosen clamp screw 1.
- Adjust the clearance between the rollers with adjustment wheel 2 depending on the workpiece and sealing method, see Chapter 7.06 Adjustment wheel for roller clearance.
- Tighten clamp screw 1.

9.02 Selecting the production type:

The **program selection** function is used to choose between the types of production
- Manual heat sealing (**Chapter 10.02**)
- Programmed heat sealing with individual programs (**Chapter 10.04**) and
- Programmed heat sealing with sequences (**Chapters 10.06**).

The types of production listed above, particularly their functions, are explained in more detail in **Chapter 10 Heat sealing.**

- Switch on the machine.

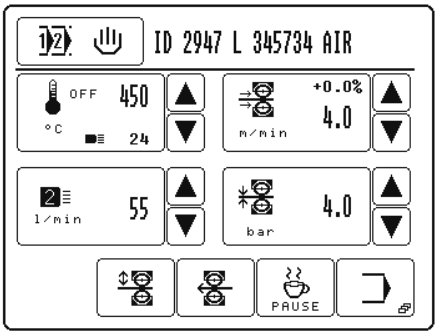

- Call up program selection.

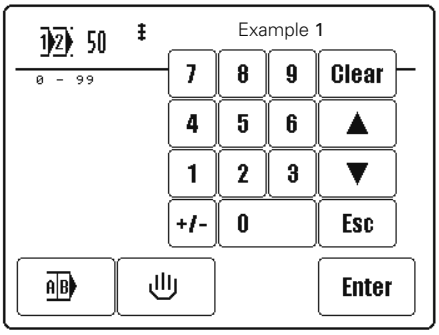

- Call up manual heat sealing, the production type, "Manual Heat Sealing" is activated.

or

- Select the desired program number.
  (Selection can also be made by entering the program number on the figure panel directly.)

Enter

- Confirm selection and quit selection menu, die production type "Programmed Heat Sealing with individual program" is activated.

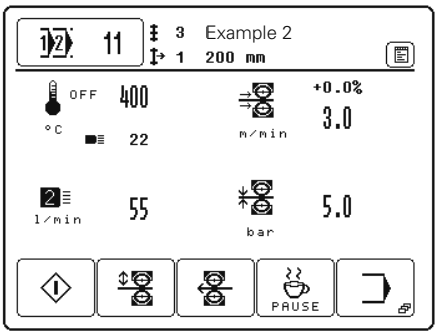

or

A B

- Call up sequence selection.

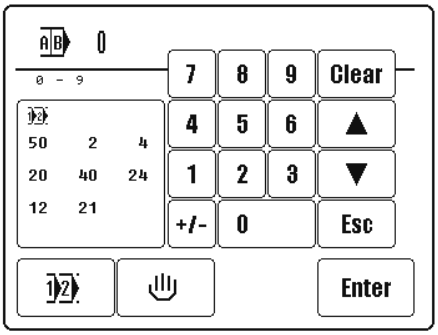

▲
▼

- Select desired sequence number.
  (Selection can also be made by entering the sequence number on the figure panel directly.)

Enter

- Confirm selection and quit selection menu, die production type "Programmed Heat Sealing with sequence program" is activated.

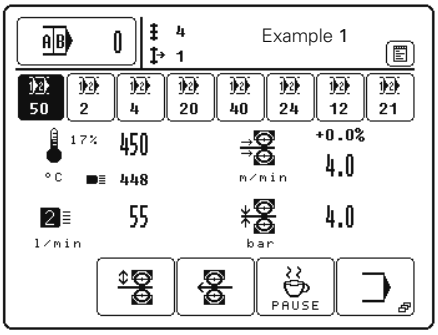

9.03 Entering the sealing parameters (Manual Heat Sealing)

- Switch on the machine.



- Call up program selection.



- Call up manual heat sealing.

PFAFF 8320-010

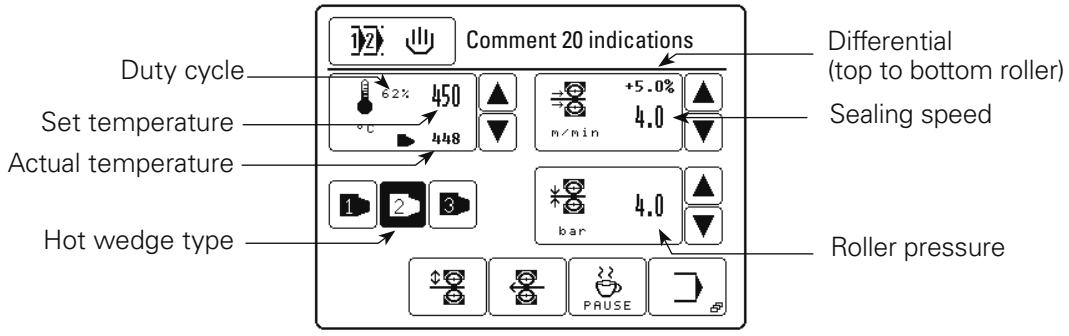

PFAFF 8320-020

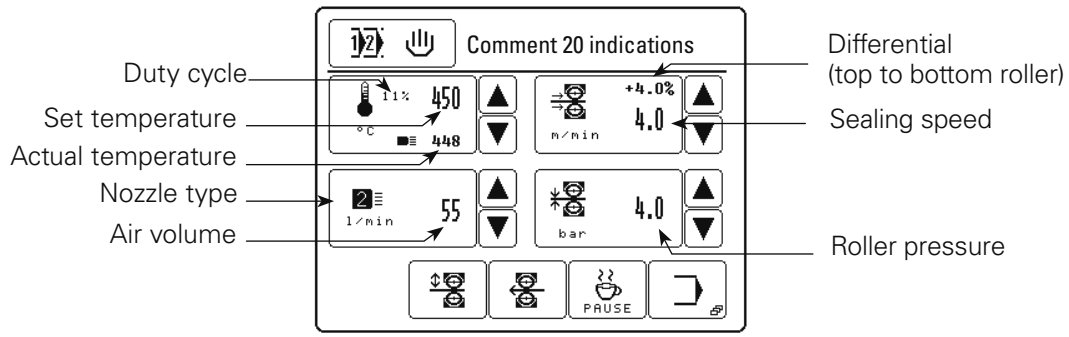

After selecting "Manual Heat Sealing", also see **Chapter 9.02 Selecting the production type**:, following values can be entered depending on the sealing method:

- Sealing temperature
  In addition to the set sealing temperature, the value for the parameter (off = heating off) appears in the appropriate symbol as well as the actual sealing temperature.
- Sealing speed
  In addition to the sealing speed, the value for the difference in speed in % between the top and bottom feed rollers appears in the appropriate symbol.
- Type of heating wedge or heating nozzle with hot air volume
- Roller pressure

The values can be entered directly by pressing the appropriate key symbol.



In Programmed Heat Sealing the direct input of sealing parameters is not possible. The alteration must be made in the appropriate sealing program, see **Chapter 10.03** Creating/altering a heat sealing program.



After switching the machine on, after the "pause" function or after detection of an error, the heating element is switched off (parameter "OFF"). After changing the sealing temperature, pressing the "start" function or after operating the pedal, the heating element is switched on again.

9.03.01 Entering the sealing temperature

PFAFF 8320-010

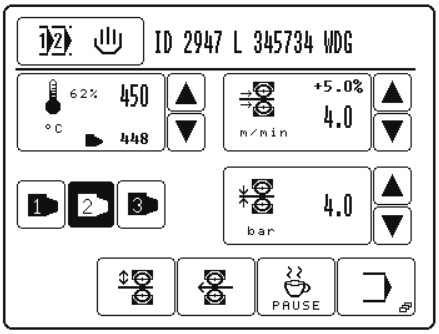

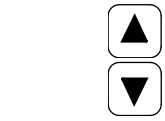

- Increase or reduce the value for the sealing temperature directly.

or

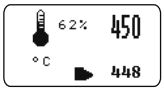

- Call up the figure panel to enter the sealing temperature.

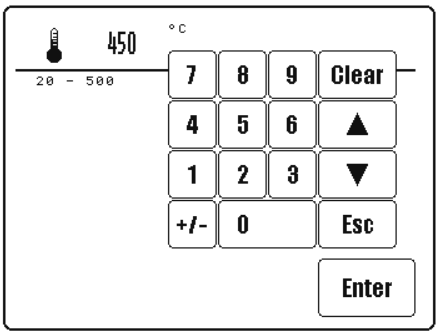

1 — **9**

- Enter the value for the sealing temperature within the permitted range.

Enter

- Conclude the input, permissible values will be taken over.

Description of further functions

Clear

Clear

- When this function key is pressed, the value is set at "0".

▲ **▼**

Arrow keys

- When these function keys are pressed, the value is increased or reduced.

Esc

Esc

When this function key is pressed, the input is cancelled without the value entered being ta

9.03.02 Entering the sealing speed

PFAFF 8320-020

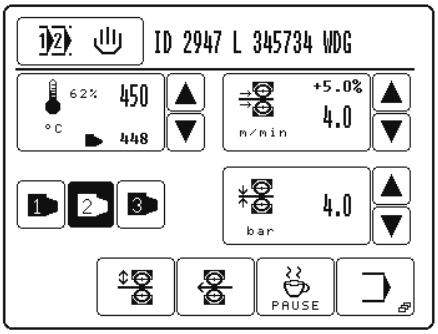

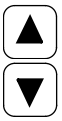

- Increase or reduce the value for the sealing speed directly.

or

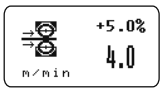

- Call up the figure panel to enter the sealing speed.

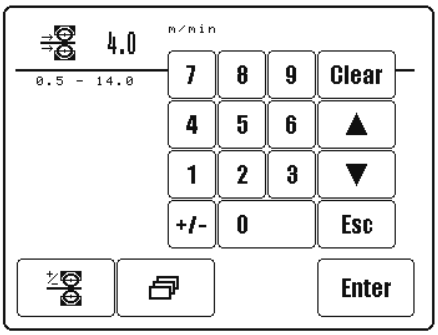

1 — 9

- Enter the value for the speed difference within the permitted range.

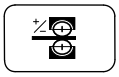

- If necessary call up the figure panel to enter the speed difference between the top and bottom feed roller.

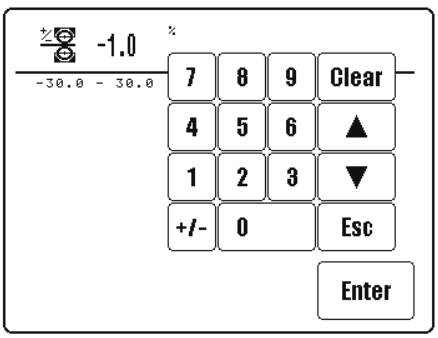

1 — 9

- Enter the value for the speed difference within the permitted range.
  The speed difference results from the change in speed of the top feed roller, which rotates either more quickly or more slowly than the bottom feed roller. The value for the speed difference depends on the material and application.

- Further sealing parameters

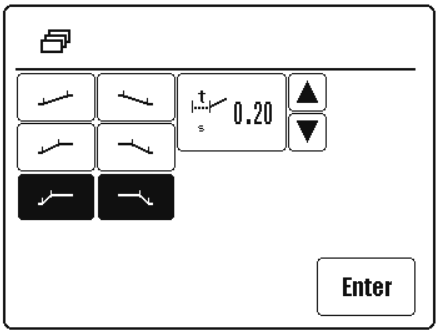

- Select acceleration and brake profile of the feed rollers, dependent on the material for sealing. Each of the profiles selected is displayed as an inverse symbol. A flat ramp stands for slight acceleration of the feed rollers. The selection of a steep ramp means high acceleration.

- Increase or reduce the start delay for the feed rollers directly.

or

- Call up the figure panel to enter the start delay.

1 — 9 Enter the start delay depending on the material being processed.

Enter

- Conclude the input, permissible values will be taken over

The start delay function is used to stipulate the amount of time which should pass between the engaging of the heating element and the start of the feed rollers.

9.03.03 Stipulating the hot wedge type (only on the PFAFF 8320-010)

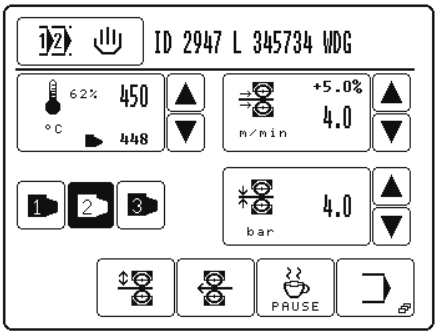



- Select the hot wedge type in accordance with the width of the hot wedge installed. The symbol for the selected hot wedge type appears as an inverse symbol.

Hot wedge type	Hot wedge version
1	Heating cartridge with **integrated** temperature sensor and **fast** control response (width 7 mm, 9 mm and 12 mm, 360 W)
2	Heating cartridge with **external** temperature sensor and **medium** control response (width 15 mm, 20 mm and 30 mm, 500 or 1000 W)
3	Heating cartridge with **external** temperature sensor and **slow control** response (width 7 mm, 9 mm and 12 mm, 360 W) (width > 30 mm, 1000 W)

9.03.04 Adjusting the contact pressure of the hot wedge (only on the PFAFF 8320-010)

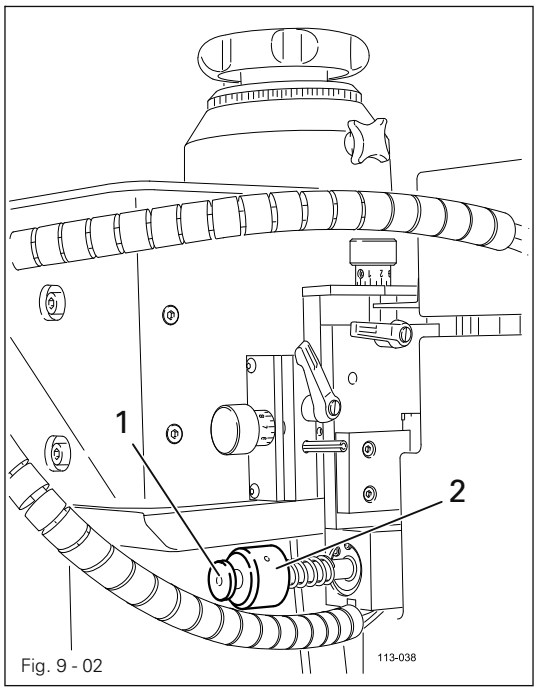

Fig. 9 - 02

- Loosen the locknut **1**.
- Adjust the pressure by turning the nut **2** in accordance with the sealing operation, also see **Chapter 13.06.02 Hot wedge pressure on and clearance to the feed rollers.**
- Tighten locknut **1**.

9.03.05 Stipulating the nozzle type and hot air volume (only on the PFAFF 8320-020)

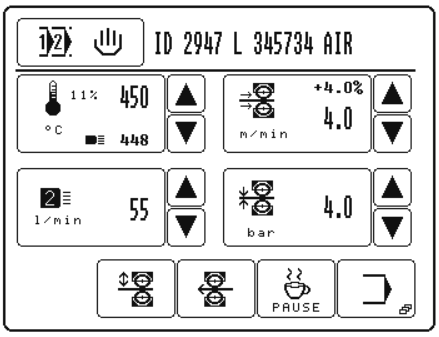

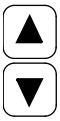

- Increase or reduce the hot air volume directly

or



- Call up input menu to enter hot air volume.

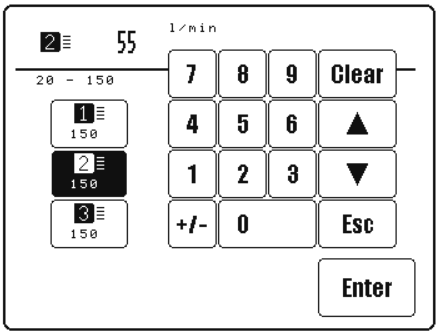



- Select the nozzle type in accordance with the width of the nozzle installed.
  The symbol for the selected nozzle type appears as an inverse symbol.

Nozzle type	Width of nozzle
1	< 10 mm
2	10 mm - 30 mm
3	> 30 mm

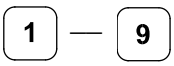

- Using the number block, enter the value for the hot air volume within the permitted range.



- Conclude the input, permissible values will be taken over.

Description of further functions



Clear

- When this function key is pressed, the value is set at "0".



Arrow keys

- When these function keys are pressed, the value is increased or reduced.



Esc

When this function key is pressed, the input is cancelled without the value entered being taken over.

9.03.06 Entering the roller pressure

PFAFF 8320-010

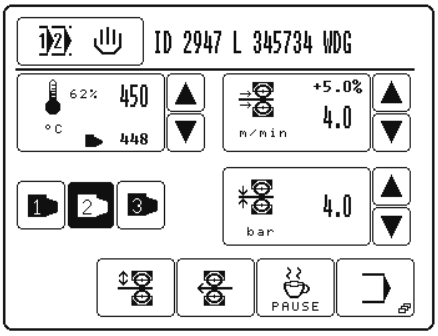

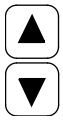

- Increase or reduce the roller pressure directly.

or



- Call up the number panel to enter the roller pressure.

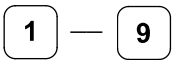

- Enter the roller pressure within the permitted range



- Conclude the input, permissible values will be taken over.



Roller pressure can be capped for specific application cases (see chapter **11.03**.01)

9.04 Adjusting the control panel

- Switch on the machine.



- Call up the input mode.

PFAFF 8320-010

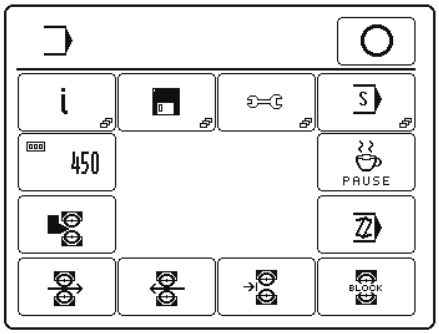

PFAFF 8320-020

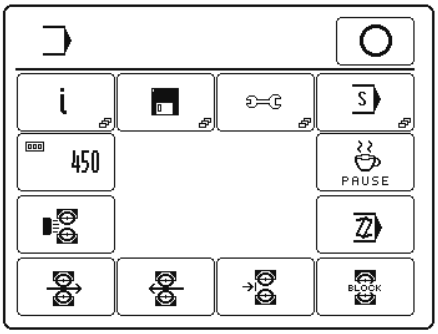

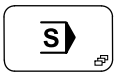

- Select the service menu.

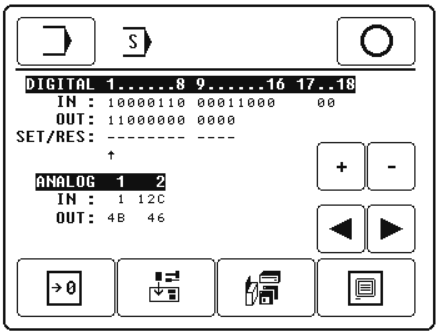

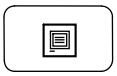

- Select control panel functions.

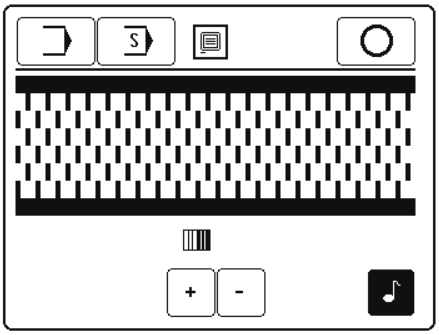



- Switch the key tone off or on.

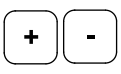

- Change the display contrast. (Function only on the control panel BDF T1).



Never reduce the display contrast to the extent, that the display can no longer be read!

10 Heat sealing



The machine may only be operated by properly instructed personnel. The operating personnel must make sure that only authorised persons are in the danger zone of the machine.

In particular for production, in addition to the input menu (see Chapter 11 Input), the „heat sealing“ mode is available, in which, irrespective of the program selected and the machine status, all functions and settings relevant for the sealing operation are shown on the display. With the program selection function, following production types can be selected in the "heat sealing" mode, see Chapter 9.02 Selecting the production type:



Manual heat sealing, see Chapter 10.02

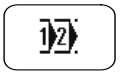

Programmed heat sealing with individual programs, see Chapter 10.04



Programmed heat sealing with sequences, see Chapter 10.06

10.01 Heat sealing principle

To achieve optimum sealing results, certain conditions must be fulfilled with regard to material and machine setting.

The material must:
- be heat-sealable, and
- suitable for being processed by the machine with regard to thickness and structure.

In the seam area, the material to be heat sealed must be clean and free from separating agents, such as e.g. oil or silicone.

The basic conditions depending on the sealing device are:
- correct working temperature of the hot wedge or hot air temperature (sealing temperature);
- correct contact pressure of the hot wedge and the correct position of the hot air nozzle;
- correct setting for the hot air volume;
- correct choice of feed rollers (silicone or steel);
- optimum pressure of the feed rollers on the material being sealed (roller pressure);
- correct distance between the feed rollers and
- correct sealing speed (feed stroke).



All the settings of the heat-sealing device are principally dependent on the material being sealed and the ambient temperature. Due to the influence of the individual operating parameter on each other, it is only possible to determine the optimum setting values by carrying out test sealing operations.

10.02 Manual heat sealing

In the "Manual heat sealing" mode, all relevant parameters for the sealing operation can be entered or altered directly, see **Chapter 9.02 Selecting the production type**.



- Select "manual heat sealing", see **Chapter 9.02 Selecting the production type**

PFAFF 8320-010

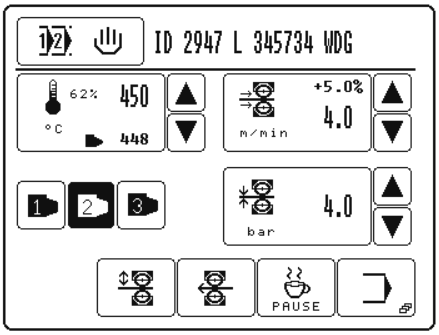

PFAFF 8320-020

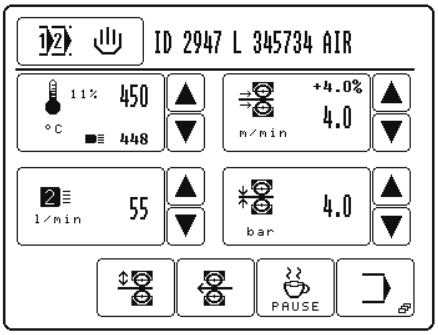

Description of the functions

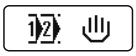

Selecting a program
This function opens the menu for entering the program number or for selecting the production type, see **Chapter 9.02 Selecting the production type**

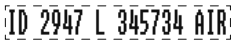

Comment Field
This function opens the menu to allow the input of a comment (max. **20** chars.), e.g. material assignment for the selected welding parameters.



Heat sealing temperature
These functions are used to alter the heat sealing temperature, see **Chapter 9.03.01 Entering the sealing temperature.**

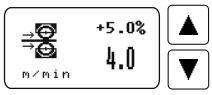

Feed stroke (sealing speed)
These functions are used to alter the feed stroke or to open the menu for entering the feed stroke difference, the brake and acceleration profiles and the start delay for the feed rollers, see **Chapter 9.03.02 Entering the sealing speed.**



Hot wedge type (only on the PFAFF **8320-010**)
These functions are used to stipulate the hot wedge type, see **Chapter 9.03.03 Stipulating the hot wedge type…** The selected function appears inverse.



Nozzle type / hot air volume (only on the PFAFF **8320-020**)
These functions are used to alter the hot air volume or to open the menu for stipulating the nozzle type, see **Chapter 9.03.05 Stipulating the nozzle type and hot air volume …**



Roller pressure
These functions are used to alter the roller pressure, see **Chapter 9.03.06 Entering the roller pressure.**



Start
(This function appears when the top feed roller is lowered.)
With this function the sealing start is called up, analog to the pedal function "+2", also see Chapter 7.04 Pedal.



Feed roller up/down
With this function the top feed roller, depending on its position, can be raised or lowered, analog to the pedal functions "-1" and "+1", also see Chapter 7.04 Pedal.



Feed rollers in reverse
This function makes it possible to call up the reverse running function of the feed rollers.



Break
This function is used to switch off the temperature control of the heating element.
The heating element cools down.



Input menu
This function is used to call up the "input" mode, see Chapter 11 Input.



Stop
(This function appears during the sealing operation.)
This function is used to stop the sealing operation, analog to pedal function "-1", also see Chapter 7.04 Pedal.

During the sealing process, the machine is operated by pedal and foot switch, see Chapter 7 Controls.

10.03 Creating/editing a heat sealing program

Up to **100** sealing programs (**0** – **99**) each with up to **20** sealing zones can be filed and managed in the machine memory.



- Call up the input menu.

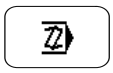

- With the "programming" function from the input menu it is possible to enter the programming function for sealing programs. A number block for entering the desired program number appears.

Creating a new program

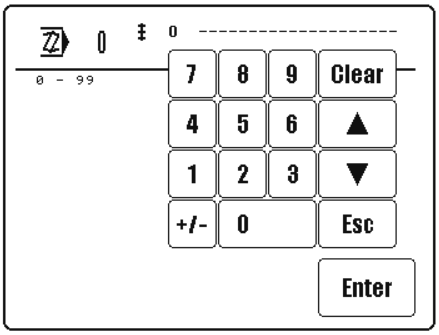

Altering a program

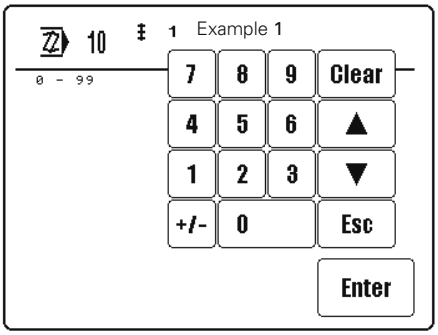

If no program is filed in the memory under the program number selected, the current sealing parameter of the manual heat sealing function will be taken over and a new program created.
As an alternative to the creation of a new program, the program number of an existing program (e.g. **10**) can be selected, and this program can be changed or copied to create a new program. In the case of existing programs, the number of zones and possibly a comment are displayed next to the program number in the headline.

1 **0**

- Enter the program number, e.g. "**10**".

Enter

- Confirm selection.

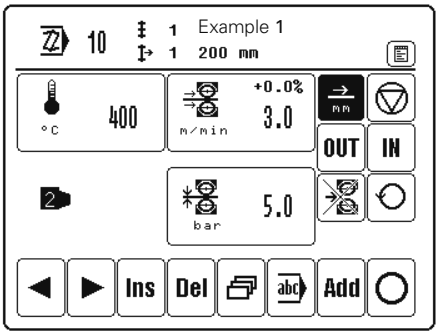

The first zone of the selected program is displayed on the screen with functions for entering sealing parameters, notes, switching to the next zone, as well as basic functions for the program input. For further descriptions of the functions see Chapter **10.03.07 Example for sealing program input.**

10.03.01 Notepad

When creating a sealing program, this function is used to enter data about the sealing tools for the program. The data serves as information for the operator and can be called up in the programmed sealing mode.

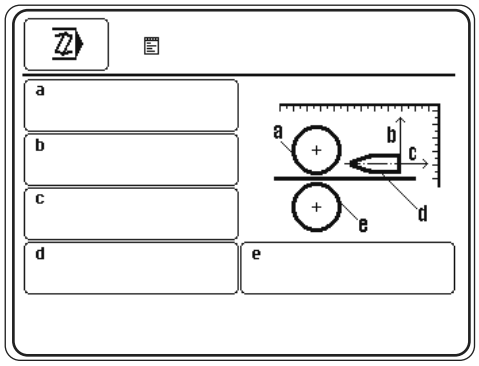

- Press the relevant key panels to enter the data.

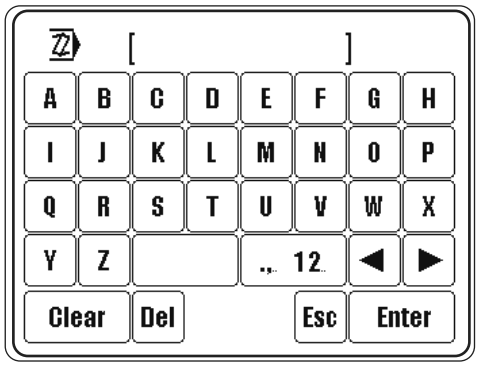

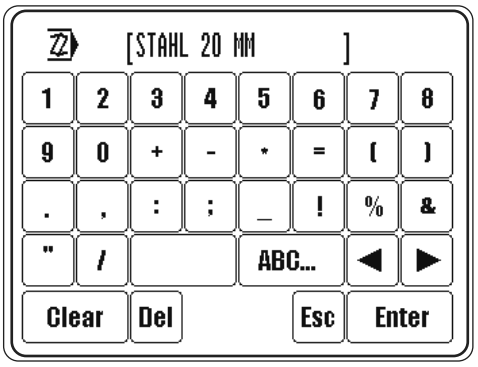

- Enter the relevant data.

Enter

- Conclude the input

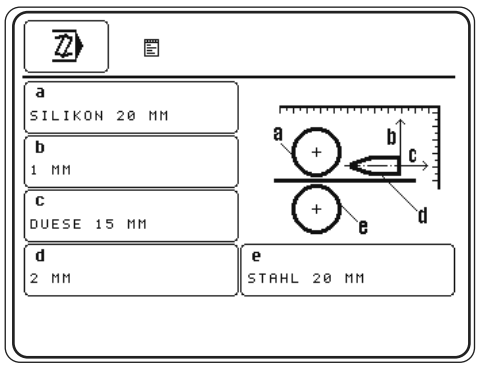

10.03.02 Basic functions for the program input

The following functions are used to enter the basic information for the currently selected program. In addition to functions for navigating in the different zones and functions for inserting and deleting zones, depending on the zone displayed, functions can be called up for entering further parameters and comments as well as for concluding the program input.

- Call up the appropriate functions to process or conclude the program.

Description of the functions

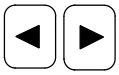

Selecting a zone
These functions are used to switch forwards and backwards to other zones in the current program.



Insert
This function inserts a new zone at the current location. The data of the current zone are copied for the new zone and the following zones are moved one place back.



Delete
This function deletes the current zone.



Further sealing parameters
(This function only appears in the first zone.)
This function opens a menu for entering further sealing parameters, for example, nozzle or hot wedge type, see also Chapter **10.03.05 Further sealing parameters.**



Comment
(This function only appears in the first zone.)
With this function, when entering a note, see Chapter **10.03.01** Notepad, the analog entry of a comment about the current program is possible. The comment is displayed as information about the appropriate program in the program selection and program management functions.



Add
(This function only appears in the last zone.)
This function is used to copy the data of the current zone and add it as a new zone.



Conclude programming
This function concludes the programming, see Chapter **10.03.06** Concluding the programming.

10.03.03 Sealing parameters

- Enter sealing parameters for each zone as described in Chapter **9.03 Entering sealing parameters** (manual heat sealing).

Description of the functions

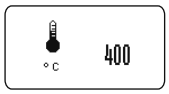

Heat sealing temperature
This function is used to alter the heat sealing temperature, see Chapter **9.03.01 Entering the sealing temperature.**

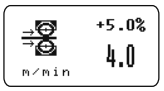

Feed stroke (sealing speed)
This function is used to open the menu for entering the feed stroke difference, the brake and acceleration profiles and the start delay for the feed rollers, see Chapter **9.03.02** Entering the sealing speed.



Roller pressure
This function is used to alter the roller pressure, see Chapter **9.03.04 Entering the roller pressure**.



Hot air volume (nur bei der PFAFF **8320-020**
This function is used to alter the hot air volume.

10.03.04 Functions for switching to other zones

In addition to the sealing parameters, further functions can be allocated to each zone, which serve to enable the automatic switch to other zones and a more exact setting of the sealing operation sequence.

- Select appropriate functions for each zone, activated functions are displayed as inverse symbols on the screen.

Description of the functions



Programmed section
This function is used to determine the length of the current zone. The value in millimetres is entered on the appropriate number block. When this function is activated, the machine switches to the next sealing zone after processing the entered section.



Loop program command
When this function is switched on a loop is programmed into the program sequence.

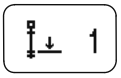

Entering the return target position
Here, the number of a previous zone can be entered.

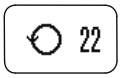

Entering the number of loop iterations 0 - 99
Input "**0**" = the loop runs endlessly

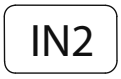

Interrupt the loop with a high level (24V) on free input IN2 (X8/PIN3)



Zone forwarding with foot switch **1** at Stop (see chapter **7.04**) skips the loop command



Programmed output
When this function is switched on, the current zone takes on an output switch function. Two outputs can be stipulated with the appropriate menu. The sealing parameters entered for this zone are not taken into account.



Programmed input
When this function is switched on, the machine does not switch to another zone until an appropriate input signal is given or not given. The two different inputs can be set up with the appropriate menu.



Sealing on/off
When this function is switched on, the current zone takes on a switching function. The sealing operation is switched off or on and the machine moves to the next zone. For the following zones, the sealing remains switched off or on until the setting is changed again.



Programmed Stop
Activating this function will transform the current range to a stop function. The welding stop is executed and a transfer to the next range occurs. The welding parameters entered for that range will not be applied.

10.03.05 Entering further sealing parameters

Further sealing parameters can be entered either

- from the manual resp. dynamic sealing mode in conjunction with the sealing speed input or
- when creating programs in conjunction with the input of the first zone.

Input while creating programs with PFAFF 8320-010

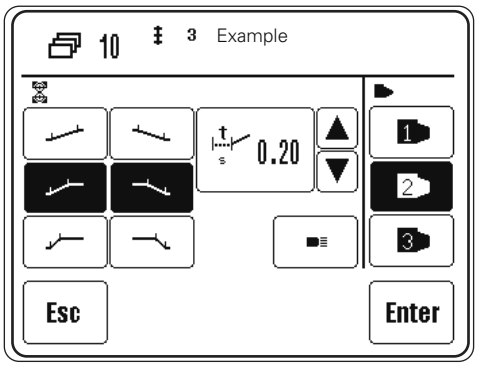

Input while creating programs with PFAFF 8320-020

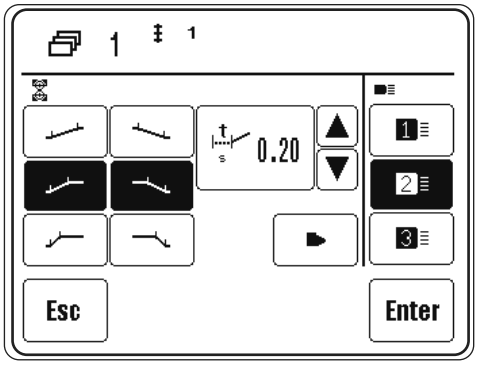

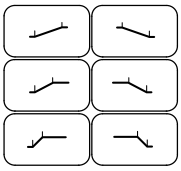

- Select acceleration and brake profile of the feed rollers, dependent on the material for sealing. Each of the profiles selected is displayed as an inverse symbol. A flat ramp stands for slight acceleration of the feed rollers. The selection of a steep ramp means high acceleration.

If the sealing result is unsatisfactory, the alteration of the acceleration or brake profile can lead to an improvement.
The values of the different acceleration and brake profiles can be stipulated in the input mode, see Chapter 11.03.01 **Feed roller parameters.**

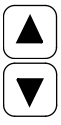

- Increase or reduce the start delay for the feed rollers directly.

or

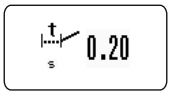

- Call up the figure panel to enter the start delay.

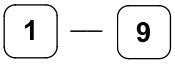

Enter the start delay depending on the material being processed.



- Conclude the input, permissible values will be taken over

The start delay function is used to stipulate the amount of time which should pass between the engaging of the heating element and the start of the feed rollers.

Further functions are available for creating programs:

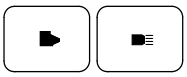

- Select the sealing tool by switching between heating wedge and hot air nozzle. This makes it possible e.g. to also create programs for hot air machines on hot wedge machines.



- Select the nozzle type in accordance with the width of the nozzle installed, see **Chapter 9.03.05 Stipulating the nozzle type and hot air volume …**

or

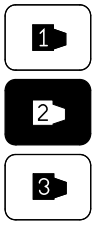

- Select the hot wedge type in accordance with the width of the hot wedge installed, see **Chapter 9.03.03 Stipulating the hot wedge type …**

10.03.06 Concluding programming



Once all the details for the programming have been entered, the programming can be concluded by pressing the appropriate function key.

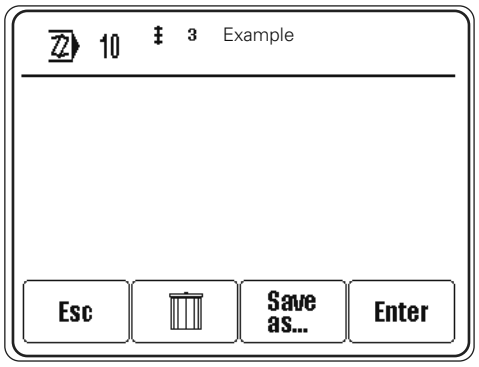

Description of the functions

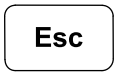

Esc
The input is interrupted and the machine moves back to the initial state of the programming function.

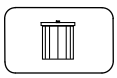

Discard alterations
All program alterations are cancelled.

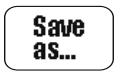

Save as...
If this function key is pressed, the number panel opens to enter any program number.



Enter
All program alterations are saved under the current program number.

10.03.07 Example of how to enter a sealing program

The following example should be filed under program number "10" with the comment "example 1", and consists of three seam zones:

1. Seam zone 1 with switch to another zone after 200 mm seam length
- 2. Seam zone with reduced welding speed and speed difference between the upper and lower transport roller and with zone forwarding after 100 mm
- 3. Seam zone back to original welding speed without speed difference between transport rollers and with zone forwarding after 400 mm



- Switch on the machine.

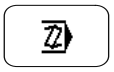

- Call up the programming function..

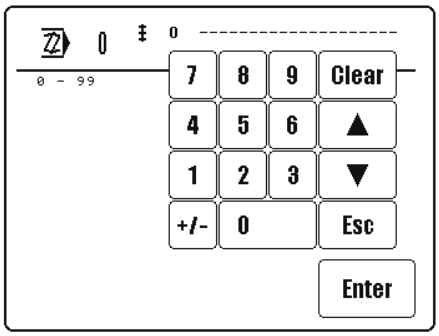

1 **0**

- Enter program number "10".

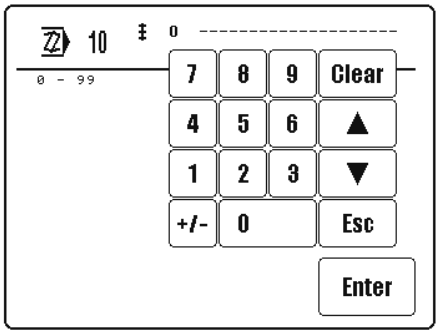

Enter

- Confirm input.
  The sealing parameters from the manual sewing mode are taken over for seam zone 1.

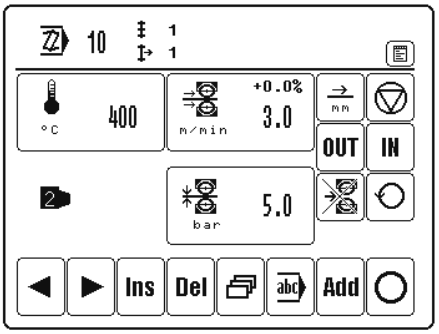

abc

- Call up comment input.

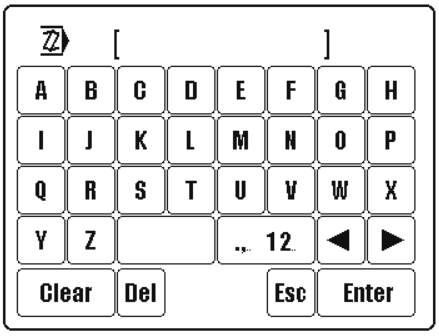

- Enter the term "example" with the appropriate symbols.

... 12

- Change to number input.

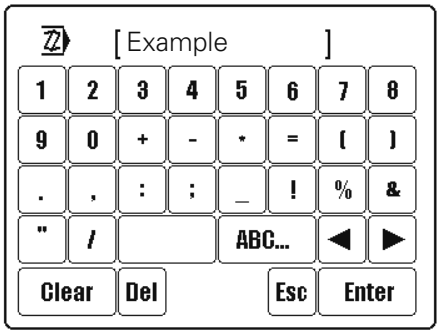

- Enter number "**1**" with the appropriate symbol.

Enter

- Conclude the comment input.

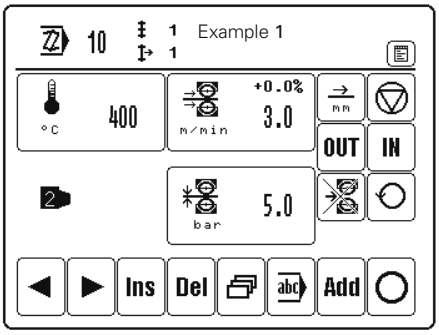

mm

- Activate the switch to another zone using the seam length.

- Enter the value "**200**" as seam length with the number panel.

Enter

- Conclude the activated function for switching to another zone.

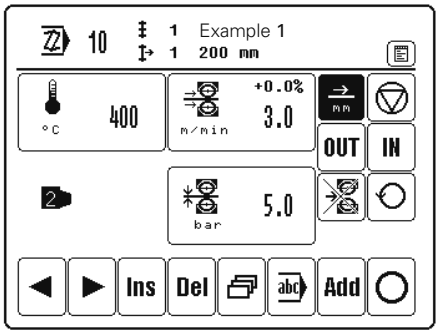

ADD ● Add seam zone **2**.

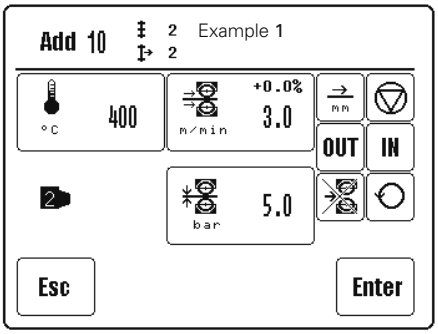

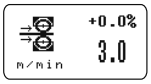

● Change the values for sealing speed and speed difference.



● Activate the switch to another zone with the value "**100**" as seam length.

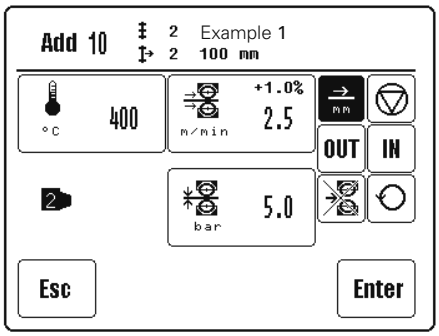

Enter ● Conclude the input of seam zone **2**.

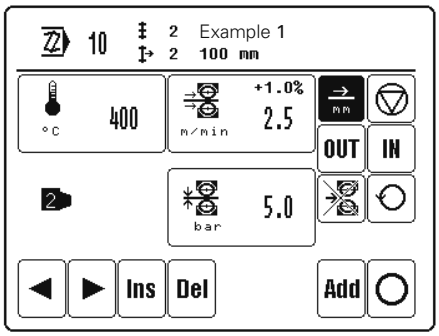

ADD ● Add seam zone 3.

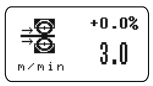

● Reset the values for sealing speed and speed difference.

mm ● Activate the switch to another zone with the value "400" as seam length.

Enter ● Conclude the input of seam zone 3.

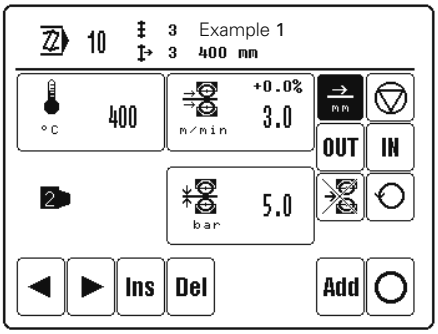

○ ● Conclude programming.

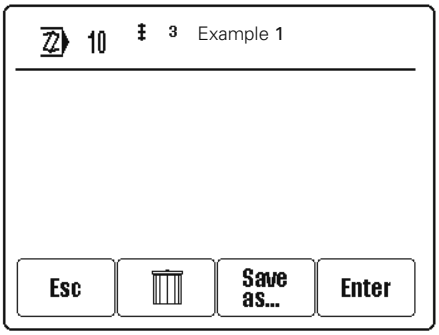

Enter ● Reconfirm the sealing program input.
The programmed sealing function is called up to process the created sealing program.

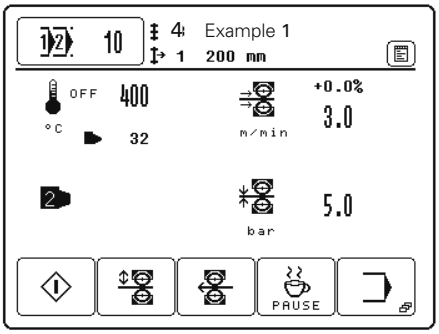

The entered program is automatically activated.

10.04 Programmed heat sealing with individual programs

In the headline, in addition to the program number of the selected program, the number of zones, the current zone and the comment for the program are displayed. For the current zone all heat-sealing parameters are displayed. The heat-sealing parameters have been stipulated during programming and cannot be processed without changing the program.



- Select the desired program, see **Chapter 9.02 Selecting the production type**.

PFAFF 8320-010

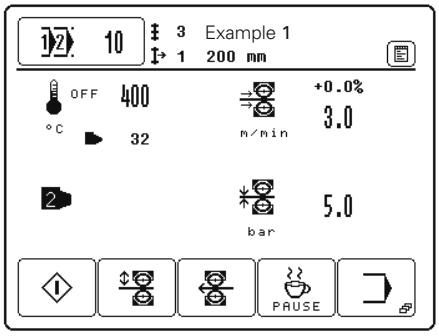

PFAFF 8320-020

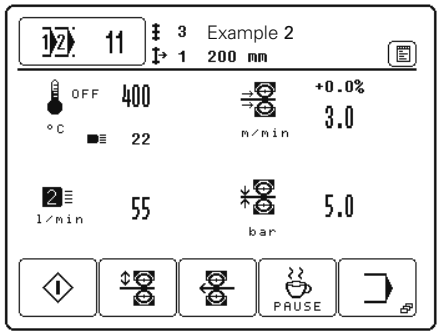

Description of the functions

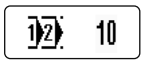

Program selection
The function opens the menu for entering the program number or for choosing the production type, see **Chapter 9.02 Selecting the production type**.



Notepad
This function opens the notepad with program details about the heat-sealing tools to be used.



Start
(This function appears, when the top feed roller is lowered.)
This function is used to call up the sealing start, analog to pedal function "+2", also see **Chapter 7.03 Pedal**.



Feed roller up/down
This function is use to raise or lower the top feed roller, depending on its position, analog to the pedal functions "-1" and "+1", also, see **Chapter 7.03 Pedal**



Feed rollers in reverse
This function can be used to call up the reverse running function of the feed rollers



Break
This function is used to switch off the temperature control of the heating element. The heating element cools down.



Input menu
This function is used to call up the "Input" mode, see **Chapter 11 Input**.



Stop
(This function appears during the heat-sealing operation.)
This function is used to stop the heat-sealing operation, analog to pedal function "-1", also see **Chapter 7.03 Pedal**

10.05 Creating/processing sequences

In sequences up to 8 heat sealing programs are combined in any order whatever and filed under a sequence number. A total of up to 10 sequence programs can be filed in the machine's memory.



- To enter sequence programming, first of all call up the Program selection function.



- Call up the Sequence selection function and select the desired sequence number.

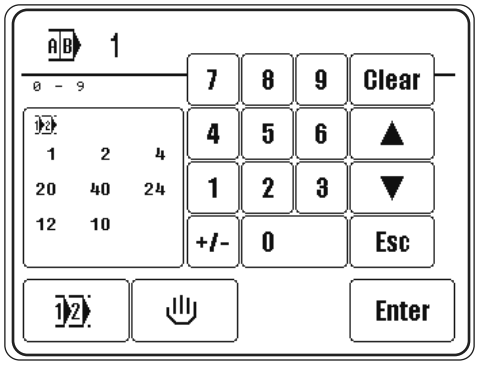

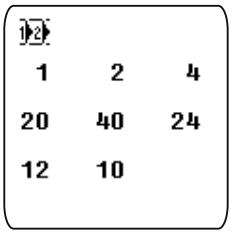

- Call up sequence programming.
  The cursor in the window shows which program is being deleted or at which point a new program is being inserted.

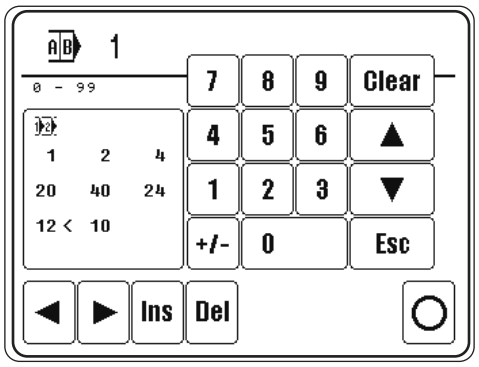

Description of the functions

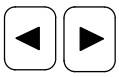

Arrow keys
These functions are used to move the cursor.



Insert
This function inserts or adds a program to the sequence at the place marked.



Delete
This function deletes the marked program from the sequence.



Conclude programming
This function concludes the sequence programming.

10.06 Programmed heat sealing with sequences

In the headline, in addition to the sequence number of the selected sequence, the number of zones, the current zone and the comment for the current program are displayed. For the current zone all heat-sealing parameters are displayed. The heat-sealing parameters have been stipulated during programming and cannot be processed without changing the program. In addition, in the case of heat sealing with sequence programs, the individual programs belonging to the sequence are displayed, and the current program is shown here as an inverse symbol.



- Select the desired sequence, see **Chapter 9.02 Selecting the production type**.

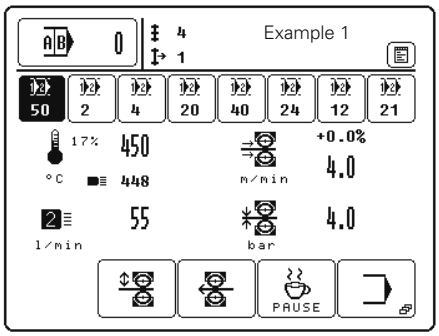

Description of the functions



Program selection
The function opens the menu for entering the program number or for choosing the production type, see **Chapter 9.02 Selecting the production type**.



Notepad
This function opens the notepad with program details about the heat-sealing tools to be used.



Heat sealing program
Press this function to select the appropriate heat sealing program.



Start
(This function appears, when the top feed roller is lowered.)
This function is used to call up the sealing start, analog to pedal function "+2", also see **Chapter 7.03 Pedal**.



Feed roller up/down
This function is use to raise or lower the top feed roller, depending on its position, analog to the pedal functions "-1" and "+1", also, see **Chapter 7.03 Pedal**



Feed rollers in reverse
This function can be used to call up the reverse running function of the feed rollers.



Break
This function is used to switch off the temperature control of the heating element. The heating element cools down.



Input menu
This function is used to call up the "Input" mode, see **Chapter 11 Input**.



Stop

(This function appears during the heat-sealing operation.)

This function is used to stop the heat-sealing operation, analog to pedal function "-1", also see Chapter 7.03 Pedal.

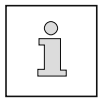

Sequence programs are run as follows depending on the parameter setting 'Sequence continue':

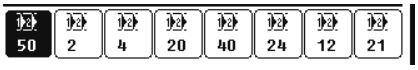

Sequence continue = 1

The programs are executed in sequence according to the sequence displayed. The currently executing program is shown inversely.
The sequence can be restarted at any point by pressing one of the program buttons.

Sequence continue = 0

The selected program remains selected and is shown inversely. A different program can be selected at any time by pressing one of the program buttons (quick key selection).

10.07 Error messages

In case of a malfunction, an error code appears on the display. An error message may be caused by incorrect handling, faults on the machine or by overload conditions.
For the explanation of the error code, see Chapter 13.13 Explanation of the error numbers.

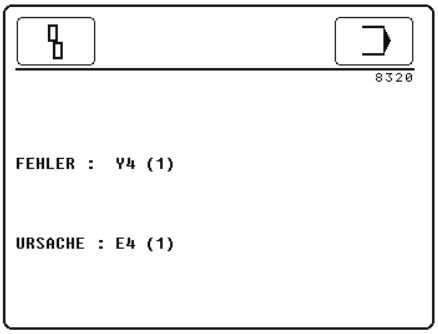

- Eliminate the error..



- Acknowledge the elimination of the error.

or



- Call up the input menu to eliminate the error with the service functions.

11 Input

Contained in the input mode are the functions for displaying information, for program management, for machine adjustment and configuration (incl. choice of country and access rights), as well as for supporting service and adjustment work.

11.01 Summary of the functions in the input mode

- Switch on the machine.



- Call up the input mode

PFAFF 8320-010

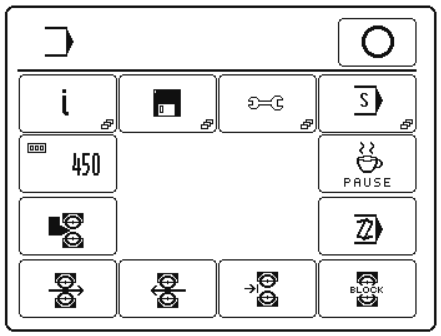

PFAFF 8320-020

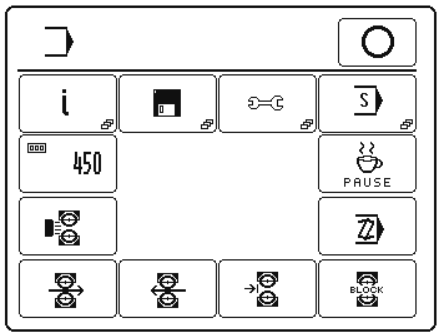

Description of the functions



Heat sealing mode
This function is used to change to the heat sealing mode.



Info
This function opens a menu to display the following information:
- Current software status of the machine
- Current firmware status of the machine
- Current firmware status of the control panel
- Regulation degree of the temperature control unit
- Number of operating hours (can be reset with the **Clear** function)
- Number of production hours (can be reset with the **Clear** function)

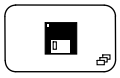

Program management
This function is used to manage the data from the machine memory and disks, see **Chapter 11.02 Program management.**

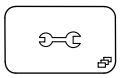

Further settings
This function is used to call up a menu for stipulating further machine settings, the choice of country and the access rights, see **Chapter 11.03 Further settings**.

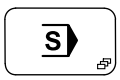

Service menu
This function is used to call up the menu for selecting various service functions, see **Chapter 13.11 Service menu.**

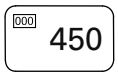

Daily piece counter
This function is used to call up the daily piece counter. The daily piece counter can be reset with the **Clear** function.

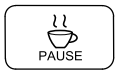

Break
This function is used to switch off the temperature control of the heating element. The heating element cools down.



Grinding the hot wedge (only on the PFAFF **8320-010**)
After this function has been called up, the hot wedge can be ground. The speed of the feed rollers can be altered in the menu displayed. The grinding operation is controlled with the pedal function, see **Chapter 12.05 Grinding the hot wedge…**

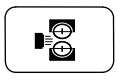

Pre-heating the feed rollers (only on the PFAFF **8320-020**)
This function is used to switch the manual pre-heating function of the feed rollers on or off. When the function is activated, a menu opens for entering the pre-heating time.



Programming
These functions are used to enter the Creating or Altering Heat-Sealing Programs, see Chapter **10.03** Creating/altering heat sealing programs.



Feed rollers forwards/backwards
This function makes it possible to turn the feed rollers forwards/backwards at a freely selectable speed. For this purpose a menu is opened with functions for selecting the speed of the feed rollers and rotational direction, as well as for stopping and starting the feed rollers.

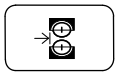

Positioning the heating element
With the use of this function, the heating element can be engaged manually to facilitate the positioning of the heating element to the feed rollers. A menu is opened with functions for carry out the engaging or disengaging operation.



Locking the feed rollers
This function is used to lock the feed rollers in order to facilitate a feed roller change. A menu is opened with a function for releasing the lock again.

11.02 Program management

The program management function is used to manage sealing programs as well as configuration and machine data. Files can be selected from the machine memory or from a disk and be copied or deleted.

- Switch on the machine.



- Call up the input mode.

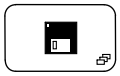

- Call up the program management function

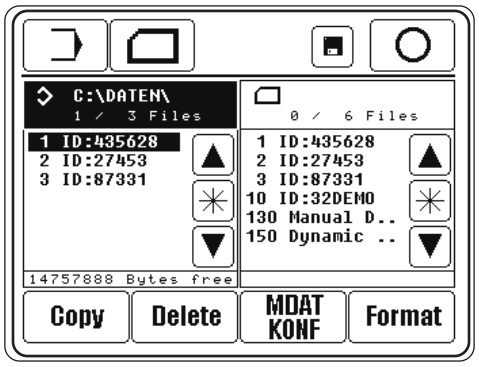



If the machine is equipped with a Floppy Disk drive, the operator can switch between Floppy and SD-Card with the button.

The directoryies of machine memory and SD-Card appear on the display:
- Left window: Machine memory ("C:\DATEN\" - is currently selected)
- Right window: SD-Card

The medium is selected by touching the appropriate field. The selected medium and the selected files are shown as inverse symbols:



Sealing programs are filed at a different level to that for the configuration and machine data, in order to avoid the configuration and machine data being processed by mistake.

Description of the functions



Input menu
This function is used to call up the input menu.



Refresh directoryies
This function is used to refresh the directoryies of machine memory and SD-Card.



Sealing mode
This function is used to change to the sealing mode.



Data selection
With these functions the desired files are marked in the current drive. Individual files are selected with the arrow keys. In combination with the Lock key (*) several files can be selected at one time with the arrow keys.



Copy
This function is used to copy the selected files from the current storage medium onto the second storage medium.

Delete

Delete

This function is used to delete the selected files.

MDAT KONF

MDAT/KONF

This function is used to call up the level for the configuration and machine data. The current settings and the machine configuration are stored in the files „MDAT8320“ and „KONF8320.BIN“. In this way the machine data can be copied on to a disk as a backup, or several machines with the same designation can be configured quickly by reading the machine data.

Format

Format

This function is used to format the floppy disk inserted. In case of SD-Card, a folder P8320 is created



In the course of the formatting operation, all data on the disk are deleted!
On SD-Card, only the contend of folder P8320 is deleted!

11.03 Further settings

The further settings are use for stipulating further machine settings, the choice of country and access rights.

- Switch on the machine.
- Call up the input mode.
- Call up the input menu for further settings.

PFAFF 8320-010

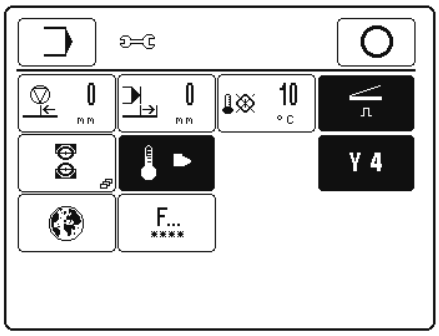

PFAFF 8320-020

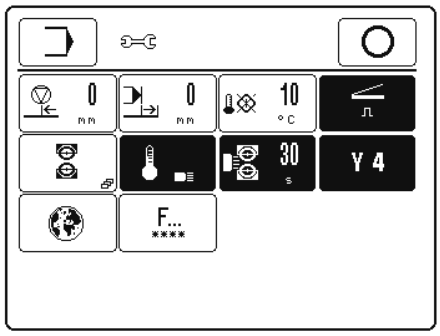

Description of the functions

Input menu
This function is used to call up the input menu.

Sealing mode
This function is used to change to the sealing mode.

Feed unit backwards after stop
This function is used to enter the distance which the feed unit should move back after a sealing stop.

Feed unit forwards at end
The function can be switched on or off. When the function is switched on, the distance, which the feed unit should continue moving after the end of sealing, can be entered.

Temperature window for sealing start
This function is used to enter the tolerance between the actual and the set temperature, within which a sealing start is possible. If the actual temperature is outside the tolerance , the sealing start is blocked.

Flip-flop mode (pedal)
This function is used to switch the flip-flop mode for the pedal function on or off:

- Function switched on (symbol shown inverse)
  The pedal function is only carried out as long as the pedal is held in the appropriate position.
- Function switched off
  The pedal function is carried out as soon as the pedal is brought into the appropriate position and remains active after the pedal has been released.

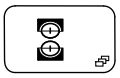

Feed roller parameters
This function opens a menu for entering the feed roller parameters, see Chapter 11.03.01 Feed roller parameters.

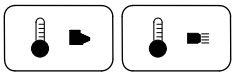

Automatic heat-up
This function switches the automatic heat-up function on or off. With the function activated, the heating element is slowly heated in a range between 20° and 120° to prevent damage to the element due to abrupt temperature change.



Pre-heating the feed rollers (only on the PFAFF 8320-020)
This function is used to switch the automatic pre-heating function of the feed rollers on or off. When the function is activated, a menu opens for entering the pre-heating time.



Country settings
This function opens a menu for setting the language and measuring units for each country., see Chapter 8.04 Selecting the language and units.

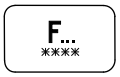

Right of access
This function calls up the menu for defining access rights, see Chapter 11.03.02 Rights of access.



Swivel sequence of the heating element
This function is used to switch the "Y4" valve for engaging and disengaging the heating element on or off. The "Y4" valve controls the cylinder for moving the heating element backwards and forwards.

When the function is switched on (standard) the heating element is engaged and disengaged in two steps:
1. Engage or disengage heating element crosswise to the feed rollers.
2. Engage or disengage heating element in the sealing direction.

When the function is switched off, step 2 is not carried out, the heating element is always in the forward position.

11.03.01 Feed roller parameters

In this menu the relevant parameters for the feed rollers are preset.

- Switch on the machine.



- Enter the input mode.

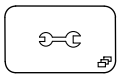

- Call up further settings.

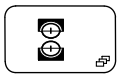

- Call up the menu for entering the feed roller parameters.

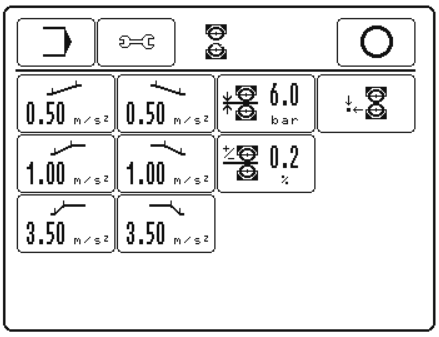

Description of the functions



Input menu
This function is used to change from the initial state to the input mode.



Further settings
This function calls up the menu for entering further settings again.



Sealing mode
This function is used to change to the sealing mode.

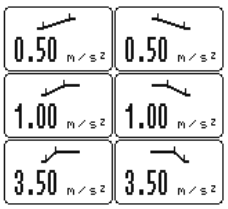

Acceleration and brake profiles
This function is used to enter the values for the corresponding acceleration or brake profiles.



Feed roller pressure limit
This function is used to enter the maximum permissible value for the feed roller pressure.

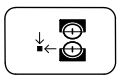

Basic position of the top feed roller
This function is used to select the basic position of the top feed roller. The basic position of the feed roller can be raised or lowered.

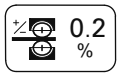

Feed difference inkrement
This function is used to enter the inkrement of the feed difference,
see chapter. **7.05 Triple foot switch**.

11.03.02 Rights of access

The functions, which can be called up with the control panel, are classified by code numbers and can be protected from unauthorised access. For this purpose, the control unit differentiates between 3 user groups (user 1, 2 and 3), all of which can be assigned a corresponding PIN. If a function is selected, for which the user does not have an authorisation, the user is requested to enter a PIN. After the appropriate PIN has been entered, the selected function is carried out. In addition to the 3 user groups, the control unit also recognises the so-called „super user", who, equipped with a key-switch, has access to all functions and who is authorised to stipulate the rights of access.

- Enter the key-switch and switch on the machine.



- Call up the input menu.

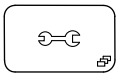

- Call up further settings.

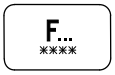

- Call up the menu for entering rights of access.

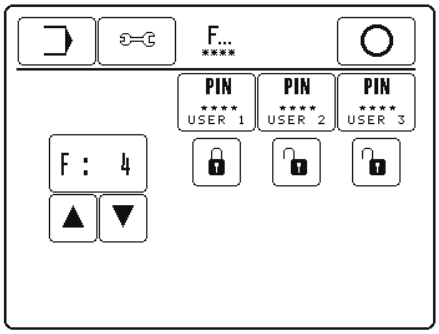

Description of the functions



Input menu
This function is used to change from the initial state to the input mode.



Further settings
This function calls up the menu for entering further settings again.



Sealing mode
This function is used to change to the sealing mode.



Entering the PIN
With this function an individual PIN for each user can be stipulated.

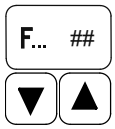

Function selection
These functions are used to select the code number for the function to be locked or released.



Locking/releasing
These functions are used to lock or release the function for the appropriate user.

Allocation of the code numbers

Code number	Function	Symbol
F...0	Program - selection	
F...1	Creating/editing welding program	
F...2	Input mode	
F...3	Further settings	
F...4	Transport roller parameter	
F...5	Transport reverse to stop	
F...6	Transport forward to end	
F...7	Temperature window for welding start	
F...8	Flip-flop mode (treadle)	
F...9	Preheat transport rollers	
F...10	Automatic preheating	
F...11	free	
F...12	Country setting	
F...13	Lock/release functions	
F...14	Program management	
F...15	Service	
F...16	Carry out a cold start	
F...17	Machine configuration	
F...18	Load software	
F...19	Reset daily piece counter	
F...20	Reset operating hours meter	
F...20	Reset production hours meter	
F...22	Control panel functions	

11.04 Installation and commissioning

11.04.01 8320-010 (Hot wedge sealing machine)

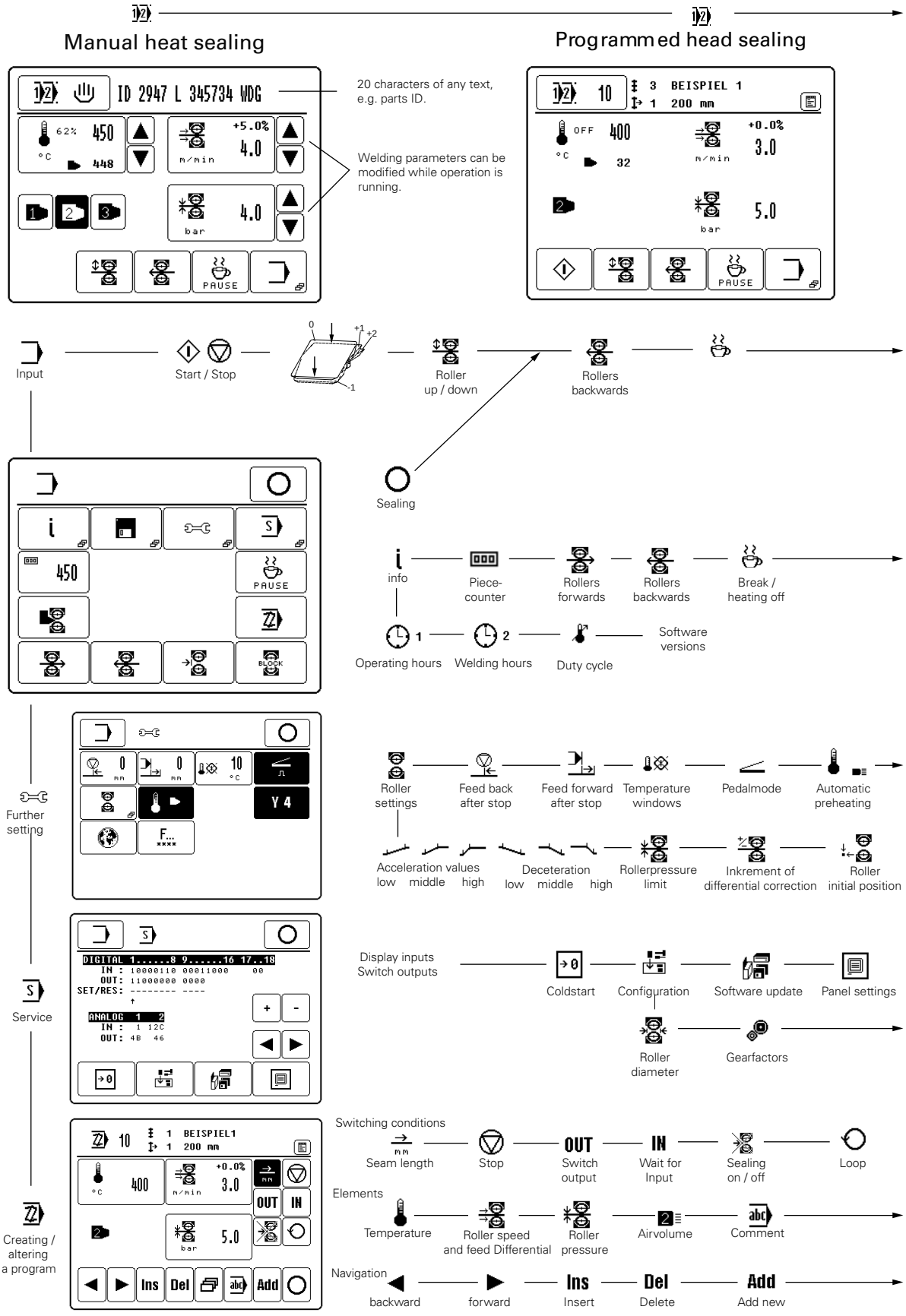

Progr. sealing with Sequences

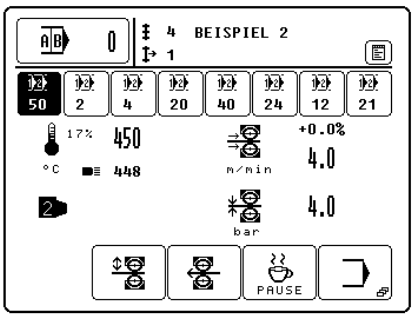

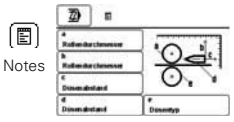

Notes



Program selection



Sequences

load manual 130 .. 149

store manual 130 .. 149

select manual sealing

(If enebled with parameter Enable Manprog = 1)

Temperature

Wedge type

Rollerpressure

Rollerspeed

Wedge type small middle large

Feed difference

Parameters of manual sealing exist separately.
Parameters of programmed sealing and programmed sealing with sequences are entered in „Creating/altering a program".

Further parameter

Acceleration values low middle high

Deceleration low middle high

Staring delay

Grind hot wedge

Reposition of the wedge

Block rollers

Program managment

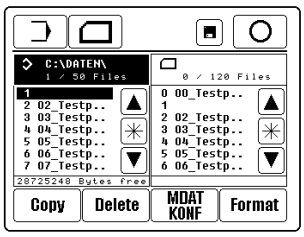

Y4

Y4 activated: wedge travels forward/back
Y4 deactivated: wedge remains in forward position

Local settings

D, GB, F, E, I — Language

F... ****

Rights of access

mm, inch... °C, °F — Units

Further parameters

Parameter	Values [init]	Function
Sequence continue	0,[1]	1: Sequence programs are forwarded 0: Sequence programs as quick key selection
Enable Manprog	[0],1	1: manual datasets can be stored and loaded back as program 130..149 0: the function is disabled
VQLIM	+/-2400	Do not change value 500
Powertest	[0],1	1: display of power input at hot wedge 0: function deactivated
Stop with IN1	[0],1	1: digital Stop signal at input IN1 0: IN1 as zone forwarding condition in programs
Start with In2	[0],1	1: digital Start signal at input IN2 0: IN2 as zone forwarding condition in programs
Enable Puller	[0],1	1: Additional puller activating 0: No additional puller installed
LinkRollerPuller	[0],1	1: Puller follows the movement of upper roller 0: Puller is lifted or lowered with the puller button (Only visible with active puller)

Notes

Further parameters

Acceleration values low middle high

Deceleration low middle high

Staring delay

Wedge type small middle large

Conclude

Discard

Enter — Save Program

Save as... — Program save as...

Esc — backward

11.04.02 8320-020 (Hot air sealing machine)

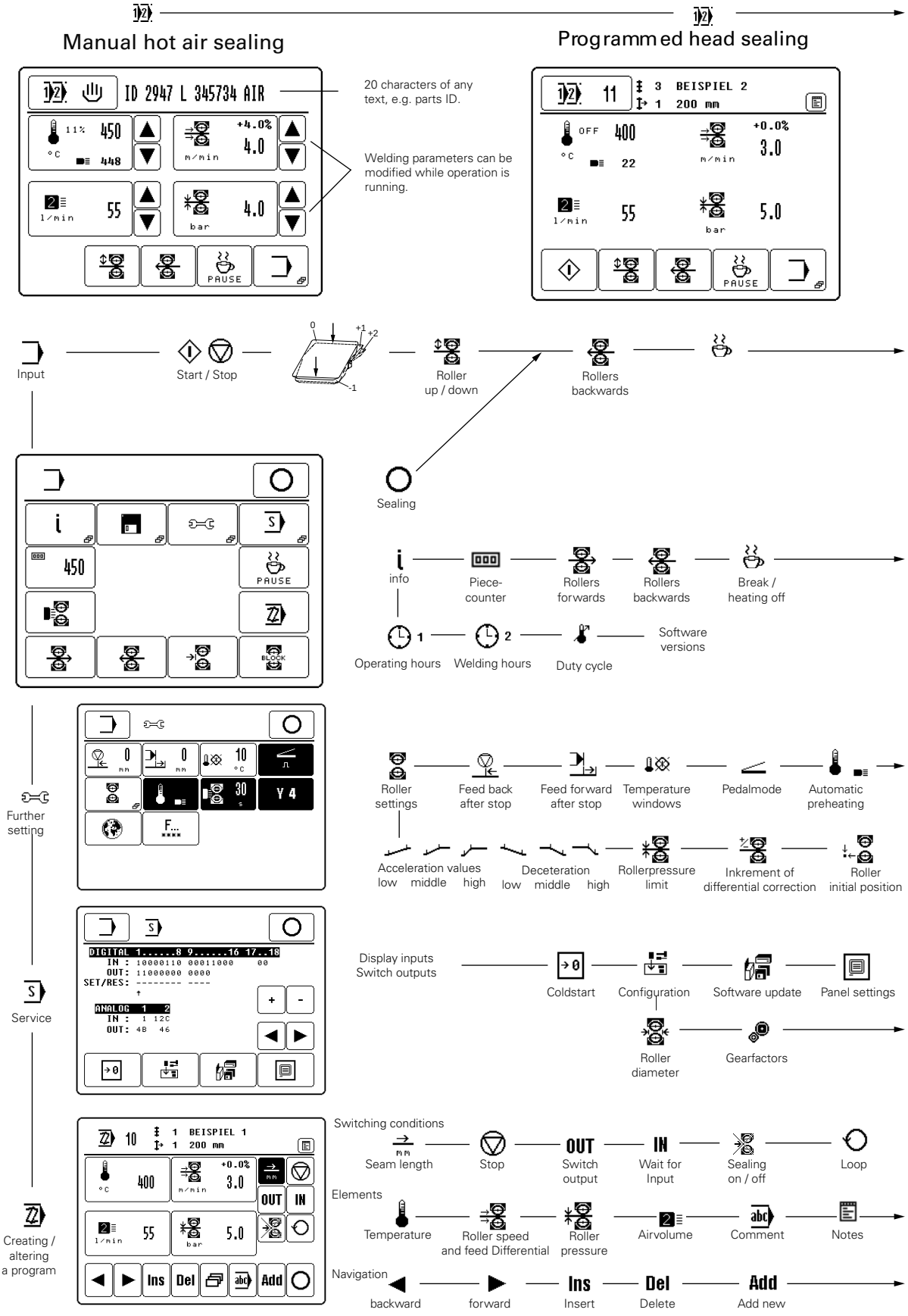

Progr. sealing with Sequences

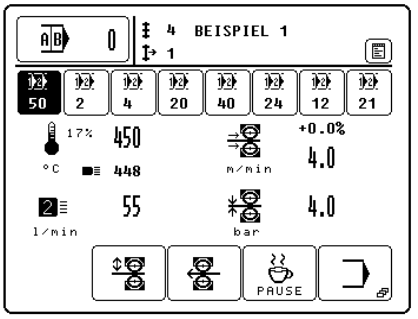

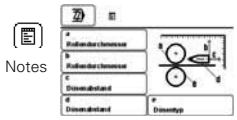
Notes



Program selection



Sequences

load manual 130 .. 149

store manual 130 .. 149

select manual sealing

(If enebled with parameter Enable Manprog = 1)

Parameters of manual sealing exist separately.
Parameters of programmed sealing and programmed sealing with sequences are entered in „Creating/altering a program".

Temperature

Airvolume / nozzle type

Nozzle typ

Rollerpressure

Rollerspeed

Feed difference

Further parameter

Acceleration values low middle high

Deceleration low middle high

Staring delay

Preheat rollers

Positioning the nozzle

Block rollers

Program managment

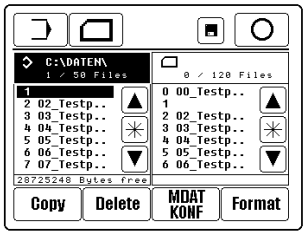

Copy Delete Machine data / configuration Format

Preheat rollers

Y4

Y4 activated: Nozzle travels forward/back
Y4 deactivated: Nozzle remains in forward position

Local settings

D, GB, F, E, I — Language

mm, inch... °C, °F — Units

F... **** Rights of access

Parameter	Values [init]	Function
Sequence continue	0,[1]	1: Sequence programs are forwarded 0: Sequence programs as quick key selection
Enable Manprog	[0],1	1: manual datasets can be stored and loaded back as program 130..149 0: the function is disabled
VQLIM +/-2400		Do not change value 500
Stop with IN1	[0],1	1: digital Stop signal at input IN1 0: IN1 as zone forwarding condition in programs
Start with In2	[0],1	1: digital Start signal at input IN2 0: IN2 as zone forwarding condition in programs
Temp sensors	[1],2	Numer of temperature sensors
Flow control [0],1		1: Air volume monitoring 0: function deactivated
Enable Puller [0],1		1: Additional puller activating 0: No additional puller installed
LinkRollerPuller	[0],1	1: Puller follows the movement of upper roller 0: Puller is lifted or lowered with the puller button (Only visible with active puller)

Further parameters

Further parameters

Acceleration values low middle high

Deceleration low middle high

Staring delay

Nozzel typ

Conclude

Discard

Enter Save Program

Save as... Program save as...

Esc backward

11.05 Advanced programming

11.05.01 Manual datasets (recipes)

The welding parameters for manual welding can be stored in the machine memory as recipes. They are formally stored as programs in the number range 130 .. 149, and can be read back from the machine memory as well. Recipes can also be copied from the machine memory to an SD card and back (see chap. 11.02 Program Administration)

The function is activated via the parameter Enable Manprog = 1 (chap. 13.15.)

PFAFF 8320-010

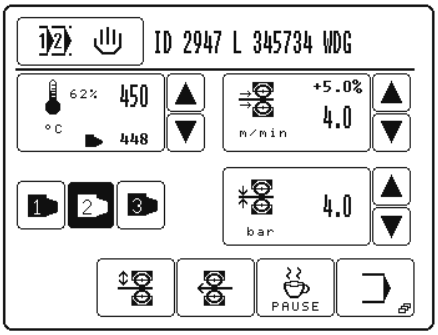

PFAFF 8320-020

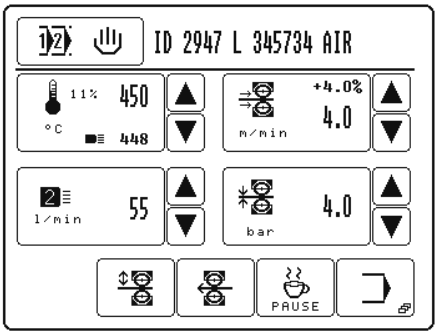

Recipes are created by way of an input of welding parameters and a description in the comment field.

Storing manual datasets (recipes)

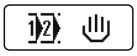

- Call up program number selection.

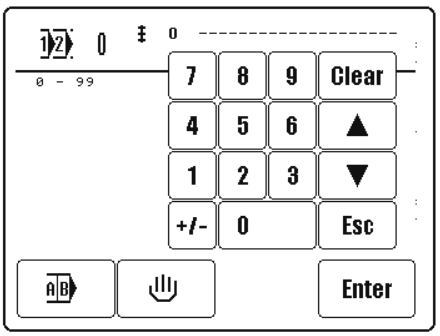



- Call up manual input menu.

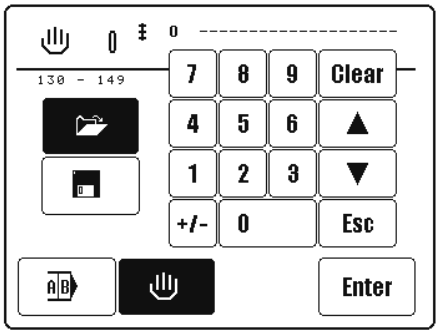

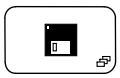

- Call up Save.

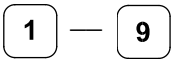

- Enter the desired program number in the range 130 - 149.

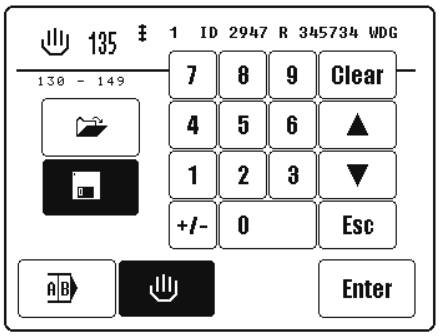

Dataset 135 (recipe) exists already - may be overwritten

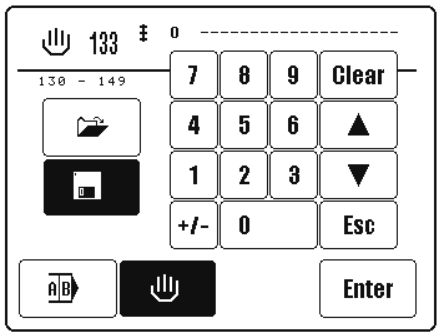

Dataset 133 (recipe) is new



- Save input (overwrite).



- Back to manual welding without saving.

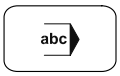

- Back to selection of individual programs or sequence selection.

Loading manual datasets (recipes) from the machine memory

- Call up program number selection.

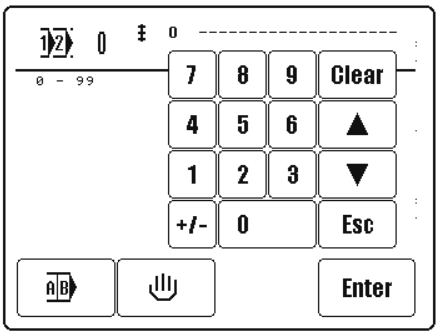

- Call up manual input menu.

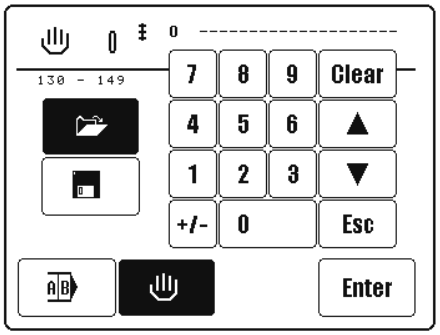

1 — **9**

- Enter the desired program number for an existing dataset (recipe) in the range **130** - **149**.

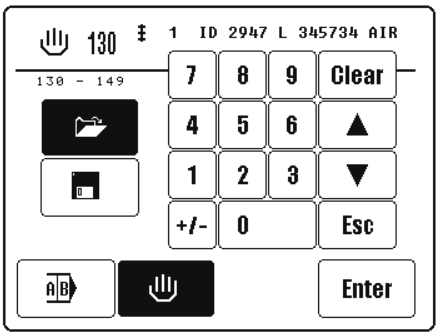

Enter

- Load dataset (recipe).

- Back to manual welding without loading.

- Back to selection of individual programs or sequence selection.

11.05.02 Stop with light barrier

This function is activated via the parameter **Stop with IN1 = 1** (see chap. **13.15.**)
A light barrier will be connected to the programmable input **IN1 (X8/2)**.
The activated light barrier will then terminate the welding process.



Once the function has been activated, **IN1** can no longer be used for zone forwarding in programs.

11.05.03 Start with light barrier

This function is activated via the parameter **Start with IN2 = 1** (see chap. **13.15.**)
A light barrier will be connected to the programmable input **IN2** (X**8/3**).
The activated light barrier will then start the welding process.



Once the function has been activated, **IN2** can no longer be used for zone forwarding in programs.

11.05.04 Connecting the external puller 95-256 400-90 with DC motor

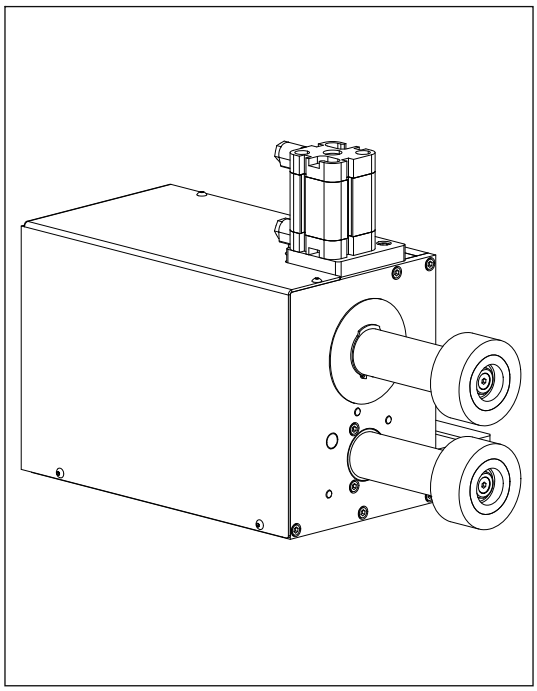

- PFAFF **8320** can optionally be equipped with a puller.
- This puller is also retrofittable.
- An optional closing or lifting cylinder must be connected via an additional valve to **X12/3** (+24V) and **X12/4** (GND).

If the puller is retrofitted, controller **PCS2002** will have to be modified. A **0.2 ohm** SMD resistor (e.g. a jumper) must be soldered over the adjacent Sense resistors **R82** and **R38**.

This task must only be carried out by authorised specialist personnel.

A modified controller can be ordered under the Item No. **71-750 002-62**. (the order must contain the note "**to be used with puller**")

- The puller is activated via the parameter **Enable puller = 1**.
  The puller button will then be displayed at the top right of various screen pages.

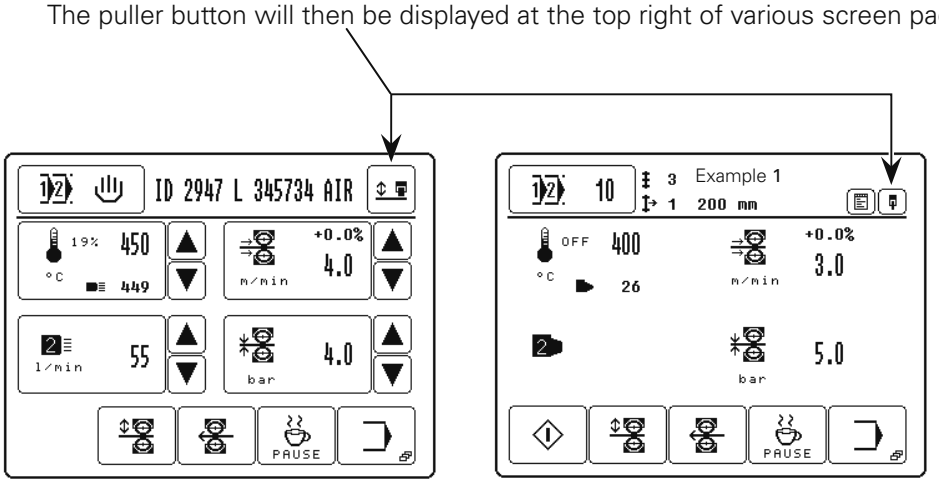

- The puller is activated ( ) and deactivated ( ) via the puller button.
- The optional closing cylinder closes the puller rollers when the puller is activated.

The puller will be opened or closed in parallel with the welding rollers when parameter **LinkRollerPuller = 1.**



- Pushing and holding the puller button (longer than 5 seconds) will open the input menu for entering the puller differential.

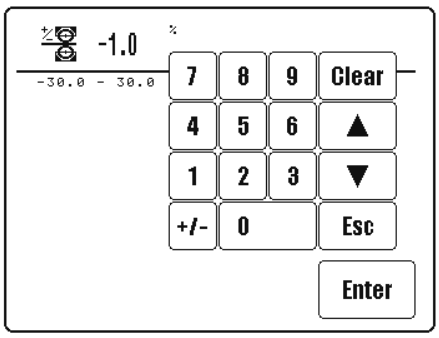

1 — 9

- Enter a speed deviation of the puller in percent for the welding machine feed.

12 Care and Maintenance

12.01 Servicing and maintenance intervals

Cleaning the whole machine	weekly
Cleaning the hot wedge	as required
Cleaning the hot air nozzle	as required
Grind the hot wedge	as required
Clean air filter of air-filter/lubricator	when required
Check/adjust air pressure	daily, before use

12.02 Cleaning



Switch off the machine and let it cool down!
Danger of burns if the heating element is touched!



- Before each start up remove any residues on the top or bottom side of the heating wedge with a soft wire brush.
  or
- Clear the opening of the hot air nozzle from sealing residues as required.

12.03 Checking/adjusting the air pressure

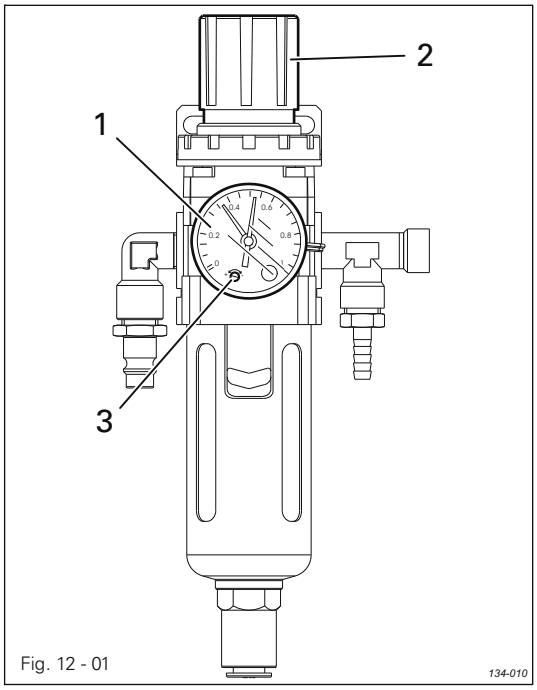

Fig. 12 - 01

- Before operating the machine, always check the air pressure on gauge1.
- Gauge **1** must show a pressure of 6 bar.
- If necessary adjust to this reading.
- To do so, pull knob **2** upwards and turn it so that the gauge shows a pressure of **6** bar.

Configuration of the pressure controller:

- Turn screw **3** until the green arrow points to **4.5** bar.
  The machine is automatically switched off if a pressure of < **4.5** bar is reached, and can be automatically reactivated, once pressure reaches a value > **5.0** bar.

12.04 Cleaning the air filter of the air-filter/lubricator



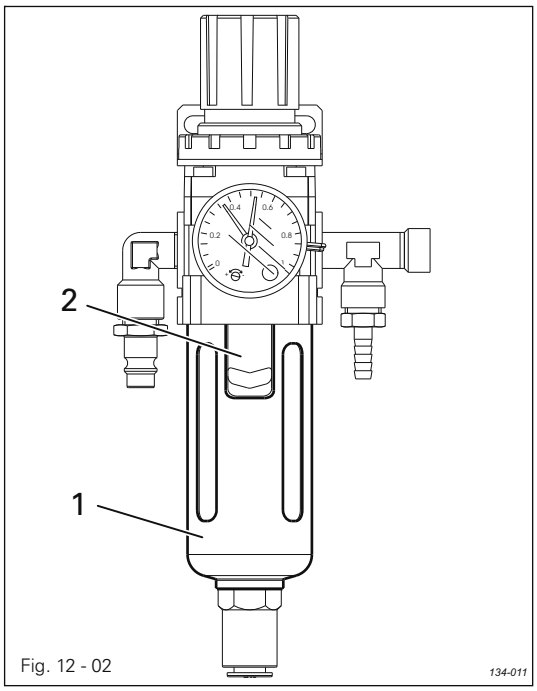

Fig. 12 - 02



Switch the machine off!
Disconnect the air hose at the air-filter/lubricator.

To drain water bowl **1**:

- Water bowl **1** drains itself automatically when the compressed-air hose is disconnected from the air-filter/lubricator.

Cleaning filter **2**:

- Unscrew water bowl **1**.
- Take out filter **2**.
- Clean filter **2** with compressed air or isopropyl alcohol (part No. **95-665 735-91**).
- Screw in filter **2** and screw on water bowl **1**.

12.05 Grinding the hot wedge (only on the PFAFF 8390-010)

It is only necessary to grind the hot wedge if it is deformed due to wear or corrosion (when processing PVC in a single shift operation, about once a week) or when a new hot wedge has been installed.

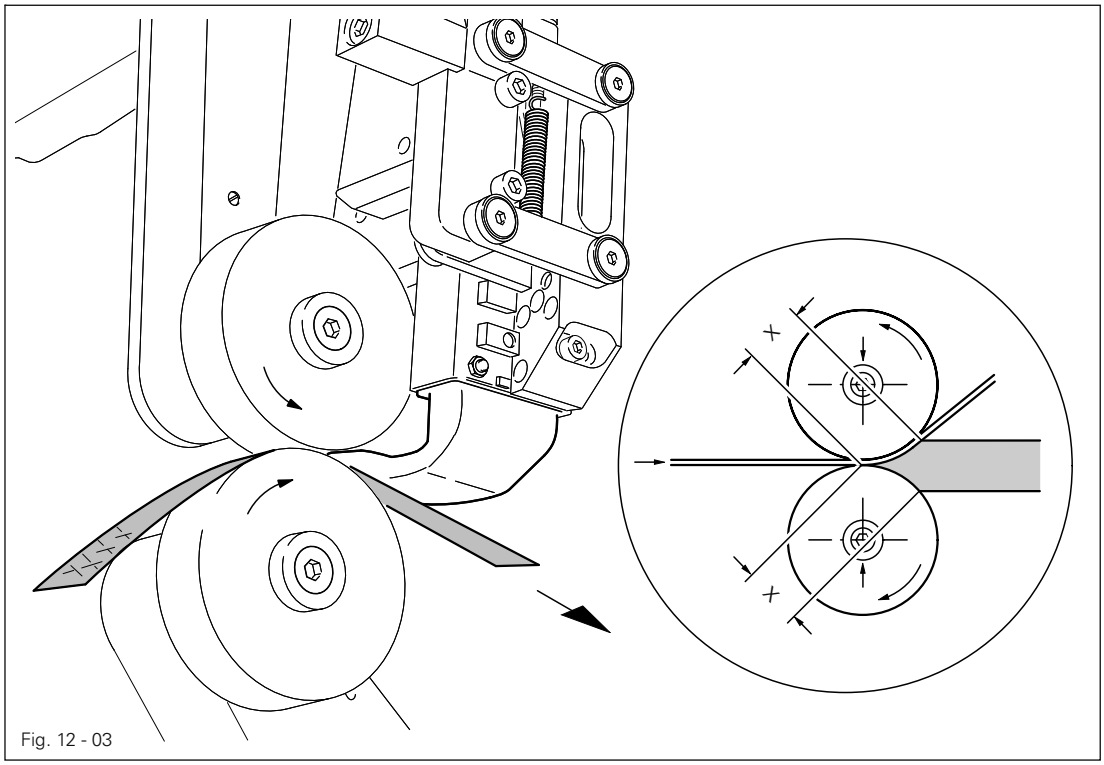

Fig. 12 - 03

- Switch on the machine and set the sealing temperature at its minimum value.

Let the hot wedge cool down!
Danger of burns if the hot wedge is touched!

- Fit the smooth feed rollers, see **Chapter 13.03 Changing the feed rollers.**
- Call up the input menu.
- Call up the Grinding the hot wedge function and, if necessary, adjust the feed speed.
- Place sandpaper (grain size **100**) between the feed rollers and lower the top feed roller with the pedal function.

Do not place fingers between the feed rollers!
Danger of crushing if the fingers are caught between the running feed rollers!

- Engage the hot wedge with the pedal function and start the feed rollers.
- Guide the sandpaper by hand and work both sides of the hot wedge until its shape fits the feed rollers and the measurement "x" is the same size at the top and bottom.
- Check the setting of the hot wedge and correct it if necessary, see **Chapter 13.06 Adjusting the hot wedge.**

13 Adjustment

13.01 Notes on adjustment

All following adjustments are based on a fully assembled machine and may only be carried out by expert staff trained for this purpose.
Machine covers, which have to be removed and replaced to carry out checks and adjustments, are not mentioned in the text.
The order of the following chapters corresponds to the most logical work sequence for machines which have to be completely adjusted. If only specific individual work steps are carried out, both the preceding and following chapters must be observed.
Screws, nuts indicated in brackets ( ) are fastenings for machine parts, which must be loosened before adjustment and tightened again afterwards.



Unless stated otherwise, during all adjustment work the machine must be disconnected from the electric and pneumatic power supply!
Danger of injury if the machine is started accidentally!



Before all adjustment work switch the machine off and let it cool down!
Danger of burns if the hot-air nozzle is touched!

13.02 Tools, gauges and other accessories

- 1 set of screwdrivers with blade widths from 2 to 10 mm
- 1 set of open-ended wrenches with opening sizes from 7 to 17 mm
- 1 set of allen keys from 1.5 to 6 mm
- 1 wire brush

13.03 Changing the feed rollers

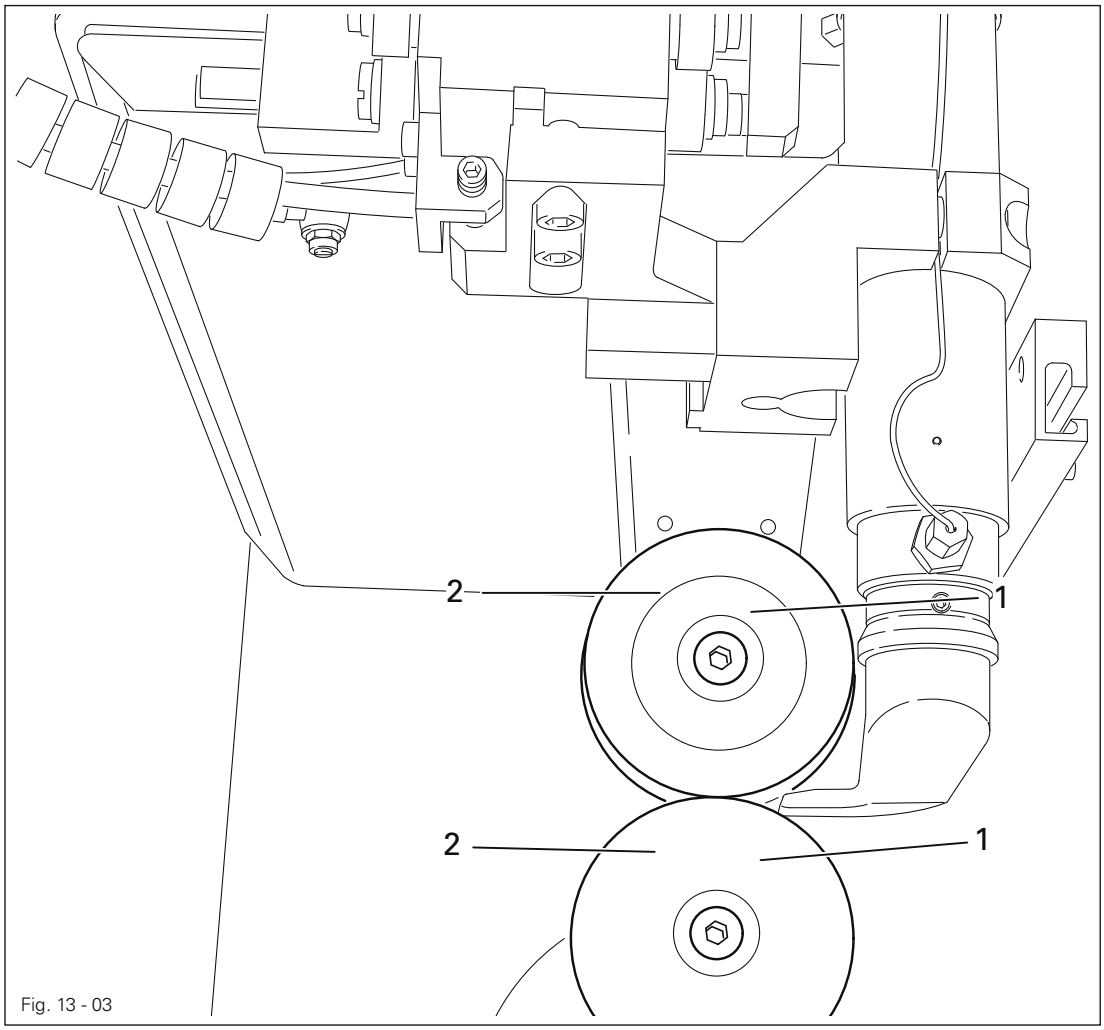

Fig. 13 - 03

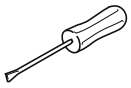

- Switch on the machine and set the sealing temperature at its minimum value.



Let the heating element cool down!
Danger of burns if the heating element is touched!



- Call up the input menu.



- Lock the feed rollers.

- Change feed rollers 1 (screws 2).



If there is a difference between the diameters of the old and new feed rollers, the machine must be re-configured, see **Chapter 13.12.01 Machine configuration.**

- Check the position of the feed rollers and correct it if necessary, see **Chapter 13.04 Adjusting the feed rollers.**
- Switch off the machine.

13.04 Adjusting the feed rollers

Requirement
The feed rollers 7 should be centred and parallel to each other.

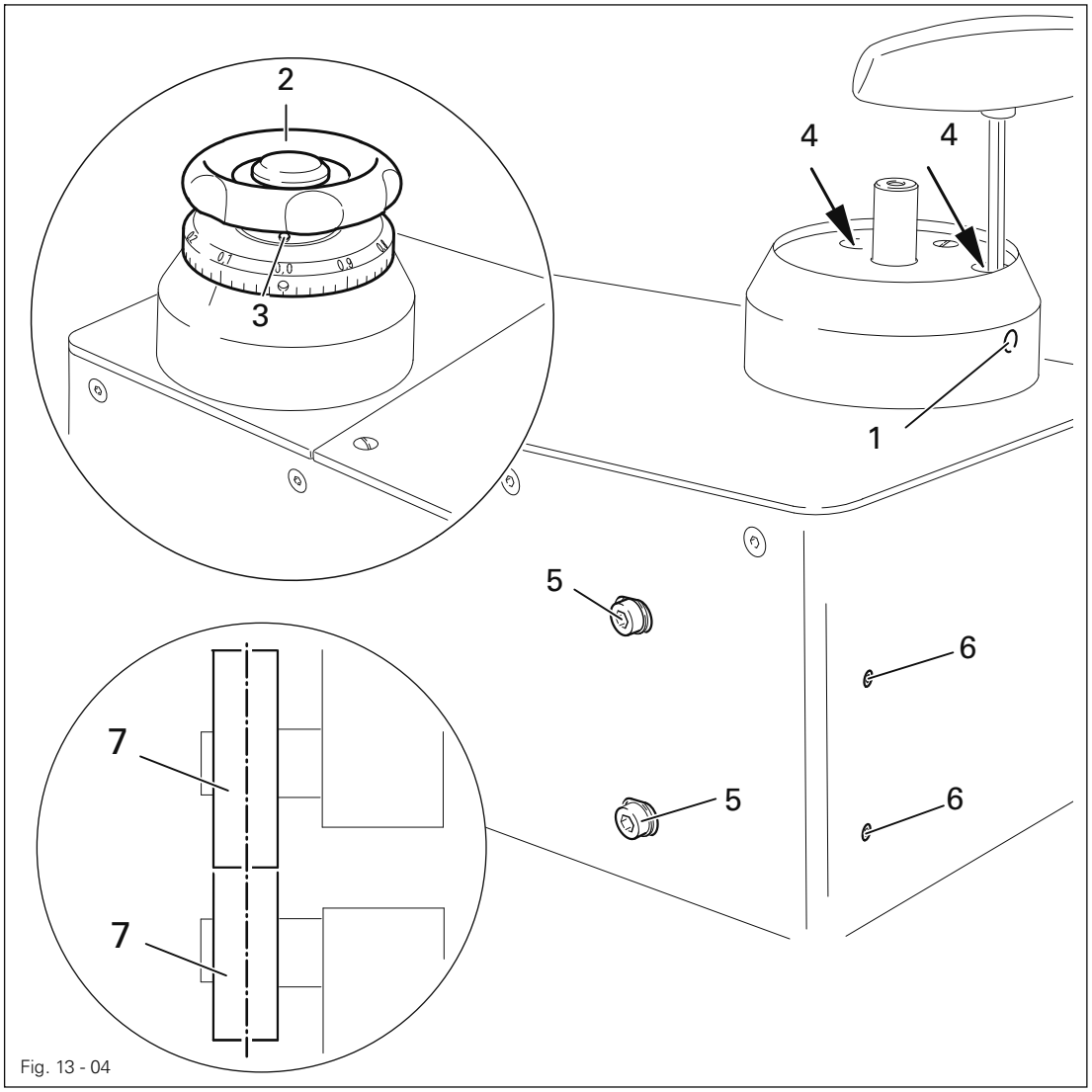

Fig. 13 - 04

- Tighten screw 1.
- Remove adjustment wheel 2 (screw 3).
- Using an Allen key (width 5), loosen the two screws 4 on the bearing of the top feed roller (accessible through holes in the case).
- Loosen screws 5 and adjust screws 6 in accordance with the **requirement.**
- Tighten screws 4 and 5.
- Fit adjustment wheel 2 (screw 3) and loosen screw 1.
- Check the roller clearance, see **Chapter 9.01 Adjusting the feed roller clearance**.

13.05 Swinging the post into position

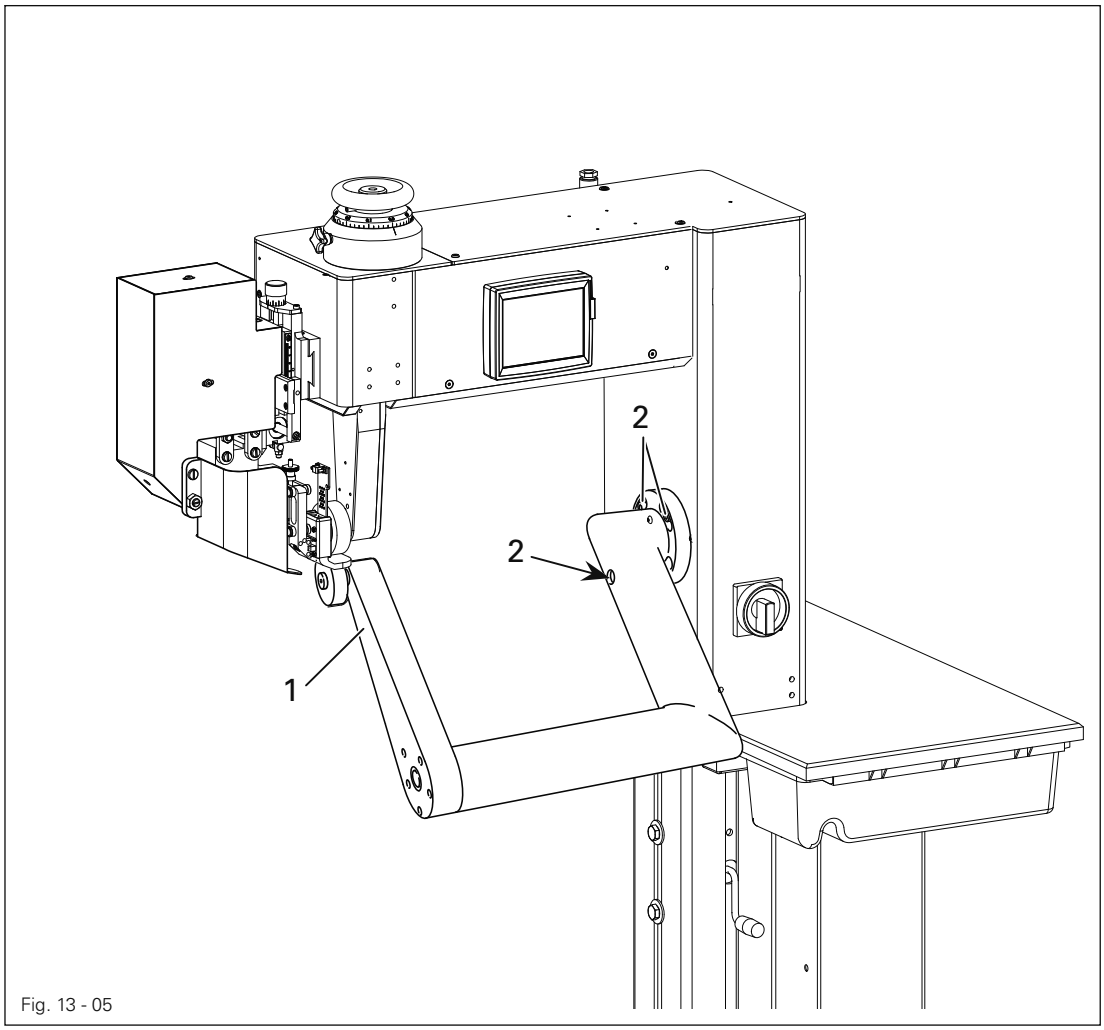

Fig. 13 - 05

- Swing post **1** (four screws **2**) into the required position.
- Check the setting of the feed rollers, see Chapter **13.04 Adjusting the feed rollers**.
- Check the setting of the heating element, see Chapter **13.07 Adjusting the hot wedge** on the **PFAFF 8320-010** or Chapter **13.08 Adjusting the hot air nozzle** on the **PFAFF 8320-020**.

13.06 Changing the hot wedge (only on the PFAFF 8320-010))

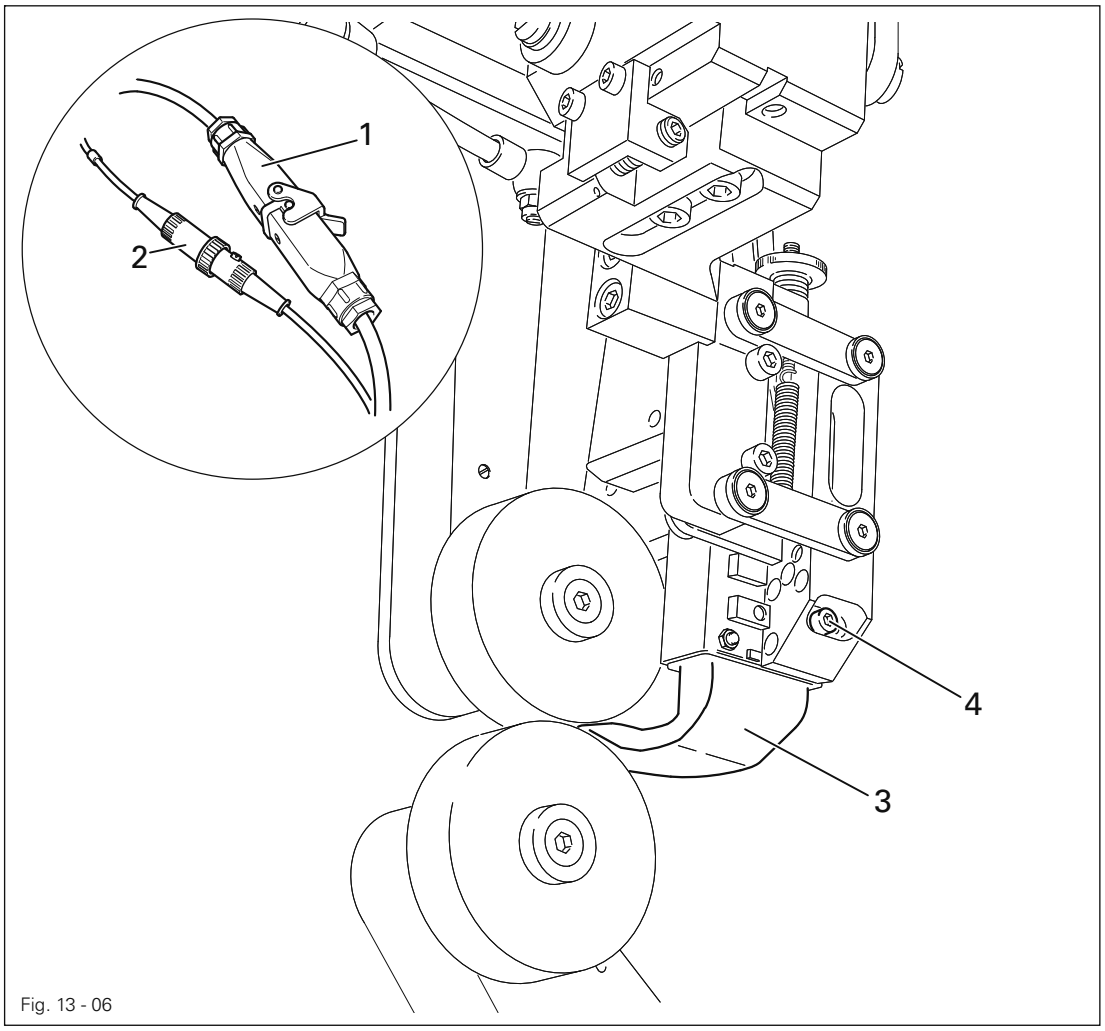

Fig. 13 - 06



Let the heating element cool down!
Danger of burns if the heating element is touched!

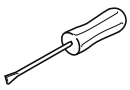

- Disconnect plug connections 1 and 2.
- Change hot wedge 3 (screws 4).
- Reconnect plug connections 1 and 2.
- Adjust the hot wedge, see **Chapter 13.07 Adjusting the hot wedge on the PFAFF 8320-010.**
- Grind the hot wedge, see **Chapter 12.05 Grinding the hot wedge.**

13.07 Adjusting the hot wedge on the PFAFF 8320-010

13.07.01 Positioning the hot wedge crosswise to the feed direction

Requirement
In the feed direction the hot wedge **3** should be centred to the feed rollers.

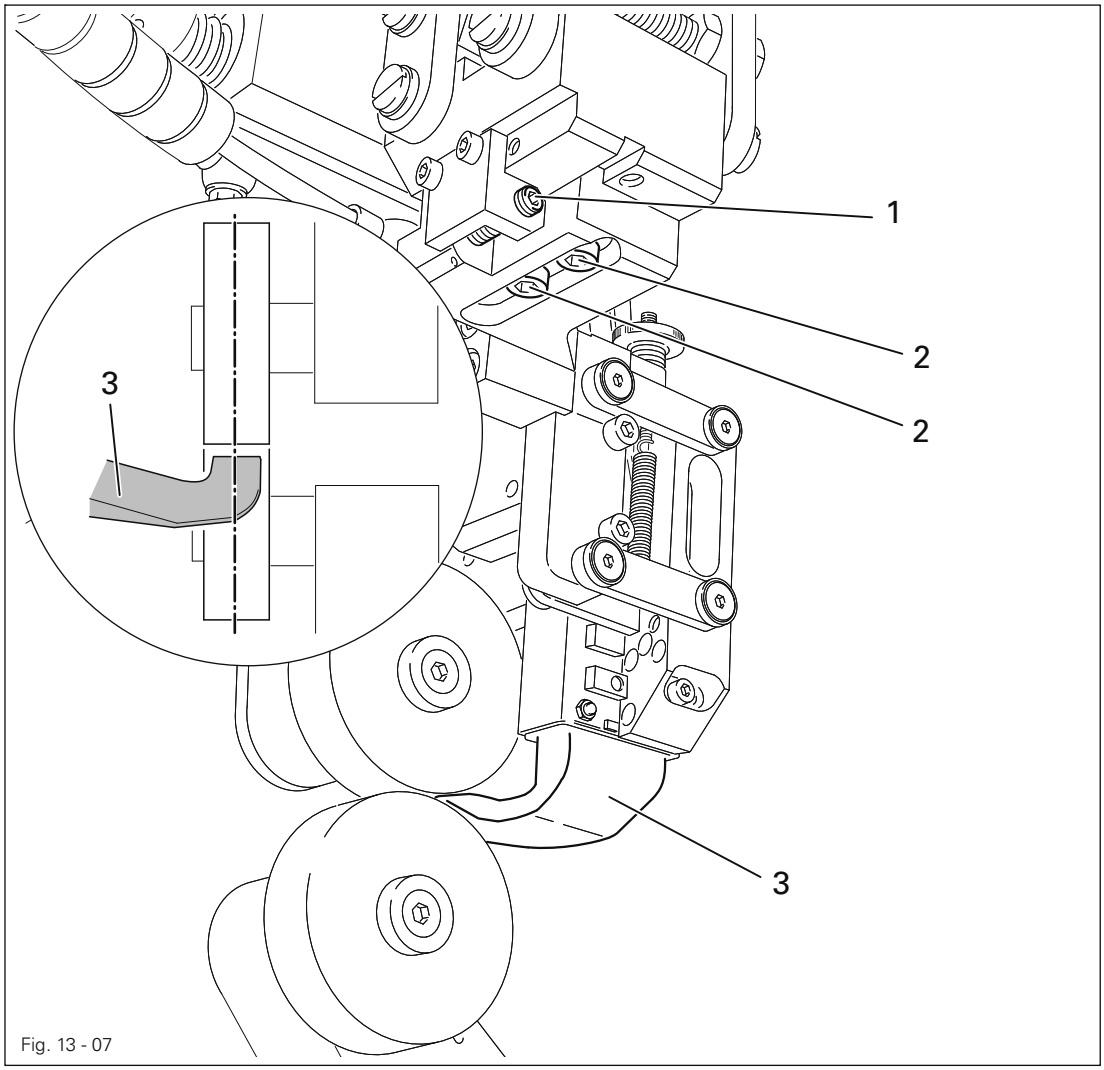

Fig. 13 - 07

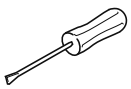

- Switch on the machine and set the sealing temperature at its minimum value.



Let the heating element cool down!
Danger of burns if the heating element is touched!



- Call up the input menu.

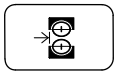

- Position the heating element.

- Adjust screw **1** (screws **2**) in accordance with the **requirement**.
- Switch off the machine.

13.07.02 Adjusting the height and counter-balancing the weight of the hot wedge

Requirement

1. When the hot wedge is engaged, the tip of the hot wedge **4 should have a clearance to the bottom feed roller corresponding to the thickness of the workpiece.**
2. **Spring 5** should have so much tension, that the hot wedge **4** remains in the centre position.

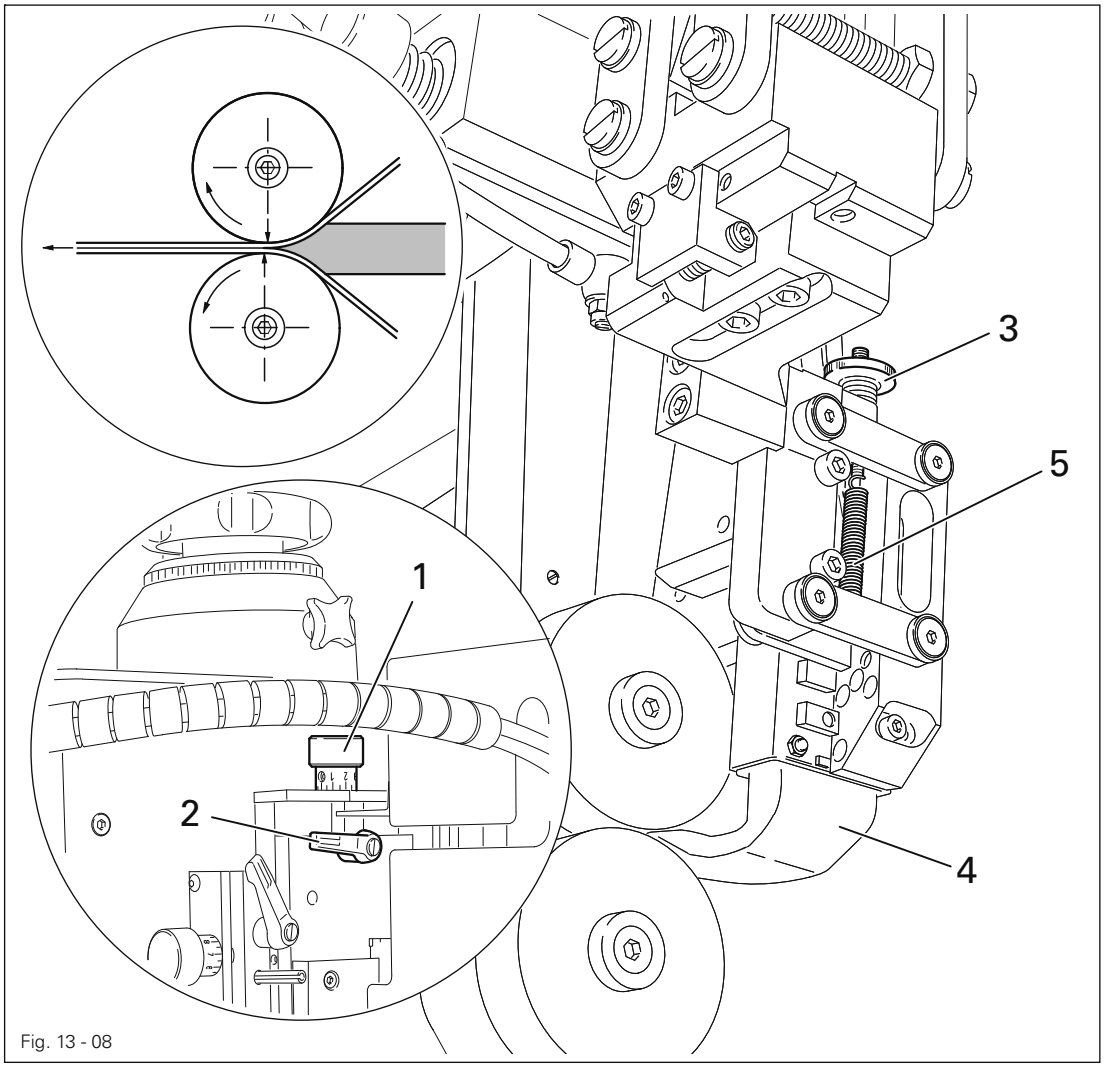

Fig. 13 - 08

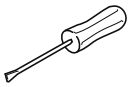

- Switch on the machine and set the sealing temperature at its minimum value.



Let the heating element cool down!
Danger of burns if the heating element is touched!



- Call up the input menu.

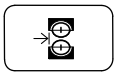

- Position the heating element.

- Adjust screw **1** (clamp screw **2**) in accordance with **requirement 1**.
- Adjust screw **3** in accordance with **requirement 2**.
- Switch off the machine

13.07.03 Hot wedge to feed roller clearance and contact pressure

Requirement

1. The hot wedge should be touching the workpiece.
2. The contact pressure of the hot wedge should be set so that a good seam quality is guaranteed, and so that the hot wedge cannot move backwards when sealing cross seams.

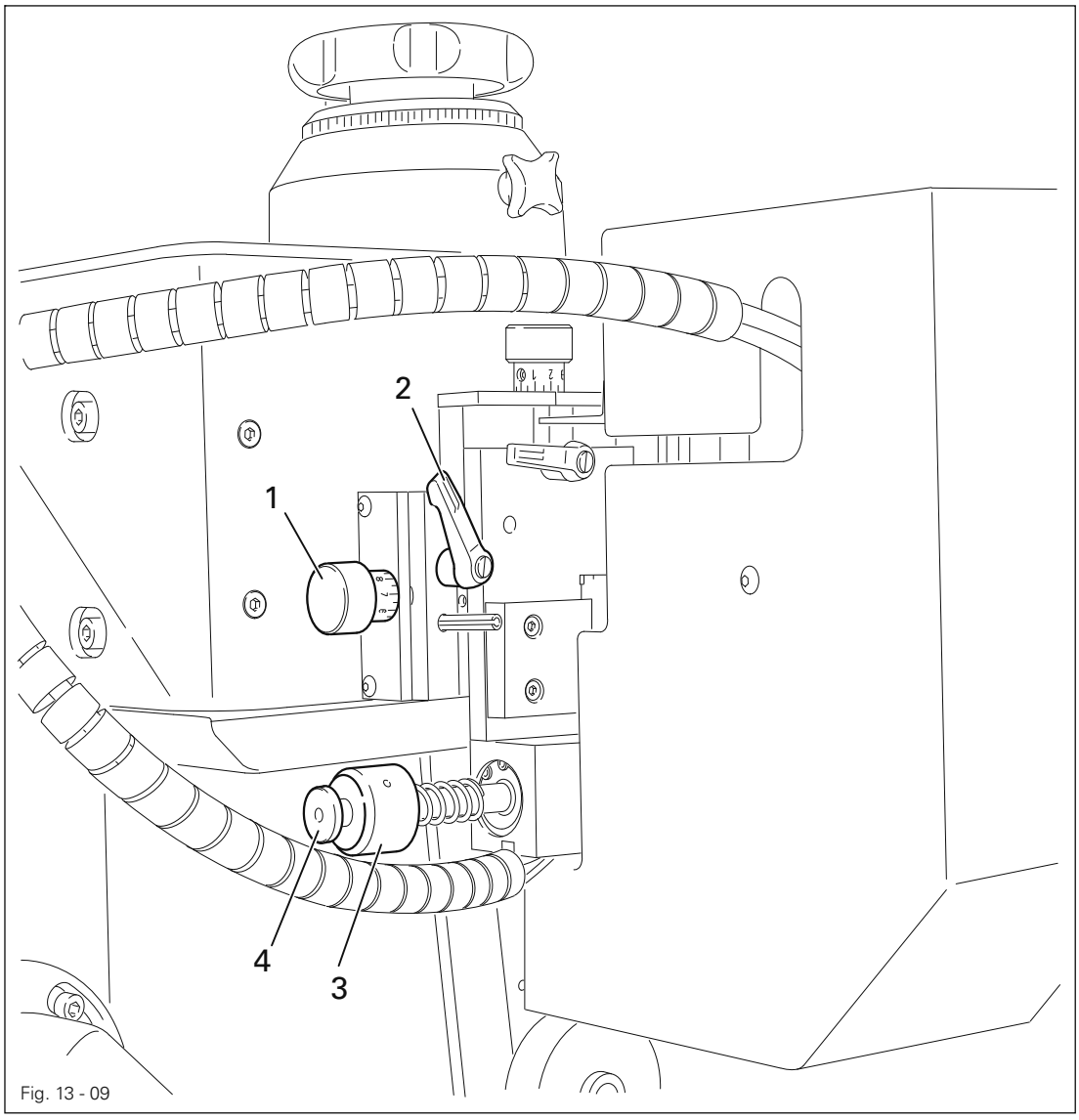

Fig. 13 - 09

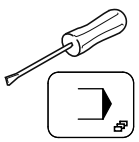

- Switch on the machine and set the sealing temperature at its minimum value.

- Call up the input menu.

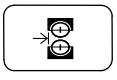

- Position the heating element
- Adjust screw **1** (clamp screw **2**) in accordance with **requirement 1**.
- Adjust screw **3** (lock screw **4**) in accordance with **requirement 2**.
- Switch off the machine.

13.08 Adjusting the hot air nozzle on the PFAFF 8320-020

13.08.01 Lateral adjustment and setting the angle of the hot air nozzle

Requirement

1. When hot air nozzle 3 is engaged, in the feed direction it should be centred to the feed rollers.
2. The front edge of the hot air nozzle 3, as seen from the rear, should be positioned parallel to the axes of the feed rollers.

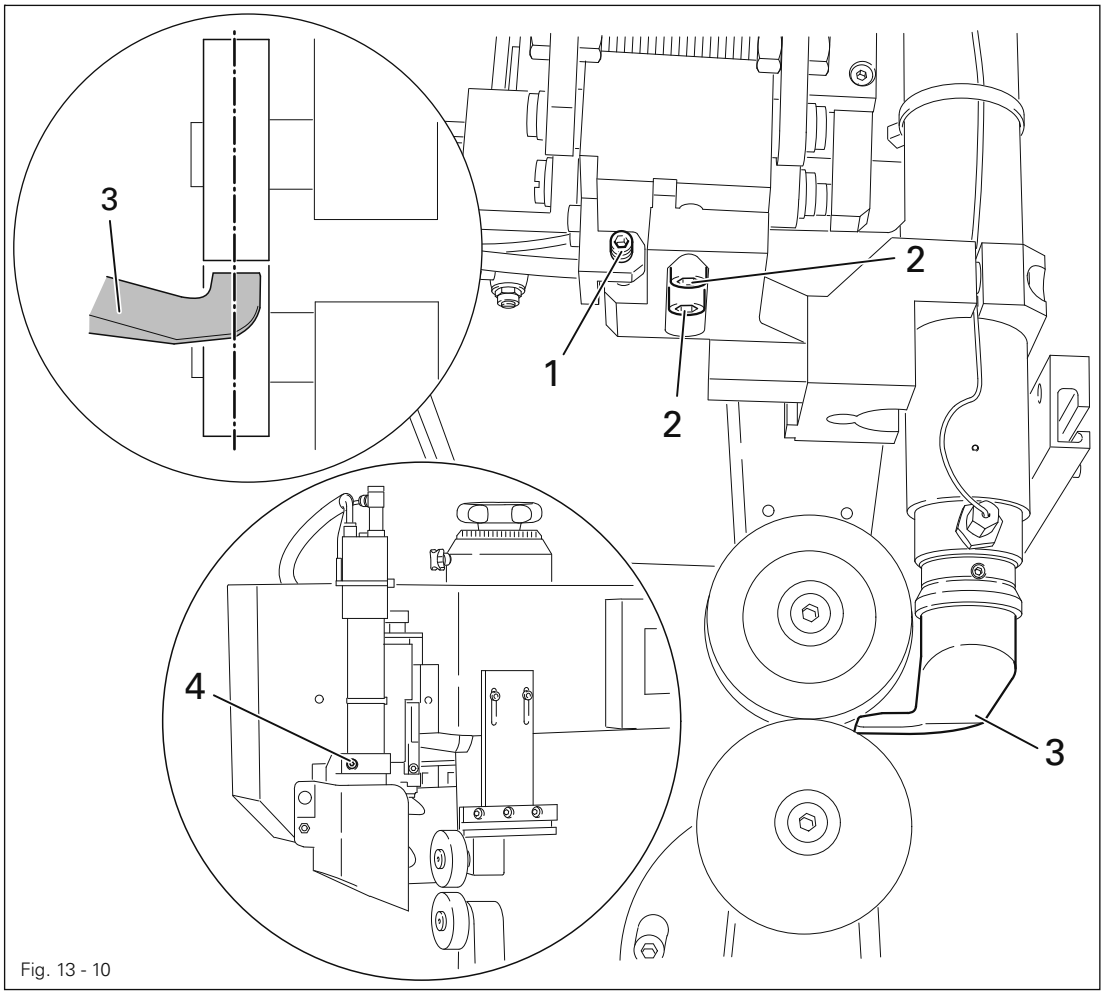

Fig. 13 - 10

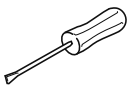

- Switch on the machine and set the sealing temperature at its minimum value.



Let the heating element cool down!
Danger of burns if the heating element is touched!



- Call up the input menu.

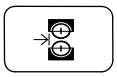

- Position the heating element
- Adjust screw 1 (screws 2) in accordance with **requirement 1**.
- Adjust hot air nozzle 3 (screw 4) in accordance with **requirement 2**.
- Switch off the machine.

13.08.02 Adjusting the height and feed roller clearance of the hot air nozzle

Requirement

1. The height adjustment of not air nozzle **5** depends on the material, and the standard setting is centred to the feed rollers.
2. There should be clearance of ca. **1 -2 mm** between hot air nozzle **5** and the workpiece.

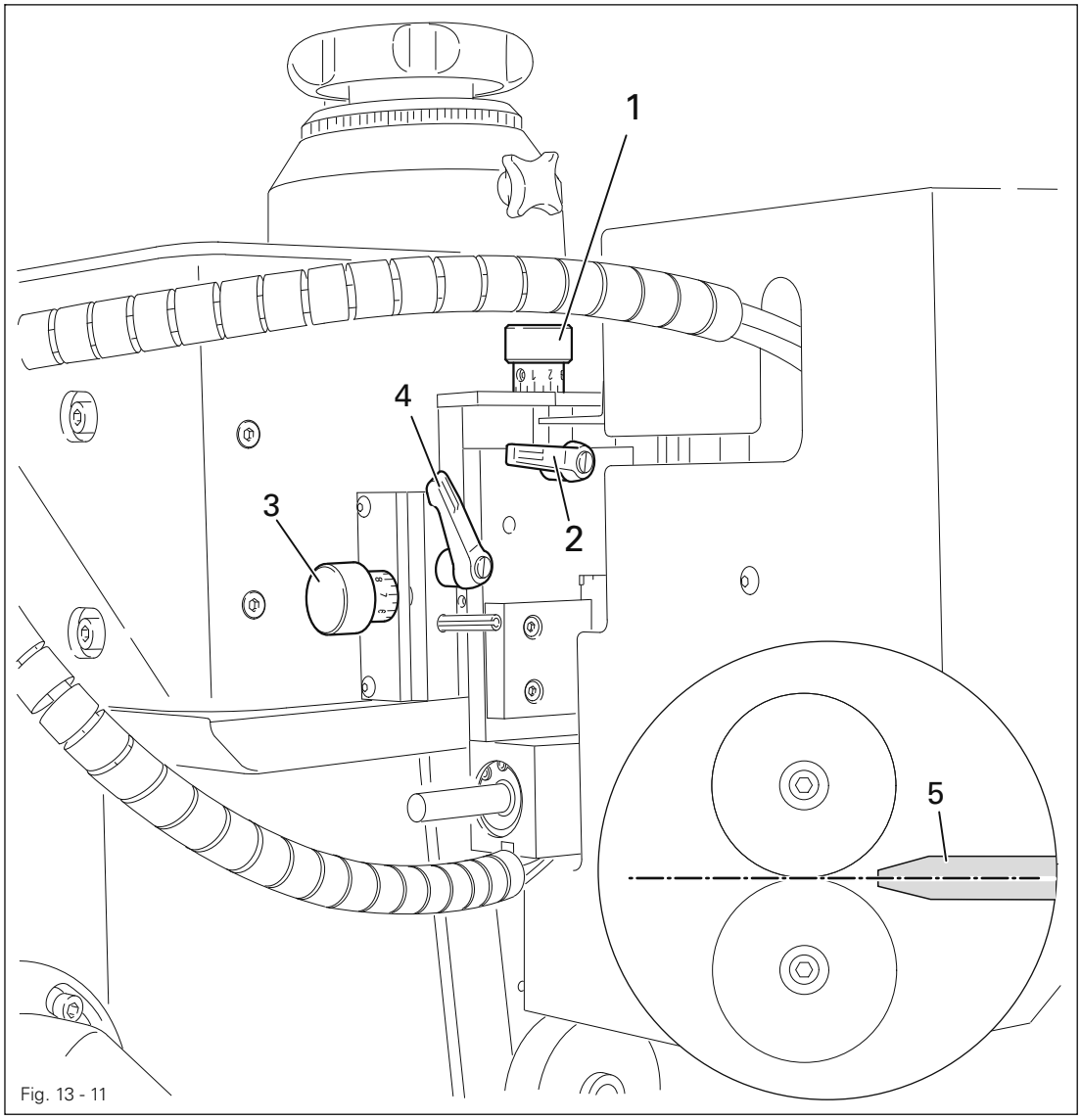

Fig. 13 - 11

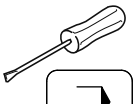

- Switch on the machine and set the sealing temperature to its minimum value.



- Call up the input menu.

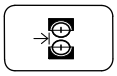

- Position the heating element.
- Adjust screw **1** (clamp screw **2**) in accordance with **requirement 1**.
- Adjust screw **3** (clamp screw **4**) in accordance with **requirement 2**.
- Switch off the machine.

13.09 Changing the heating cartridge (only on the PFAFF 8320-020)

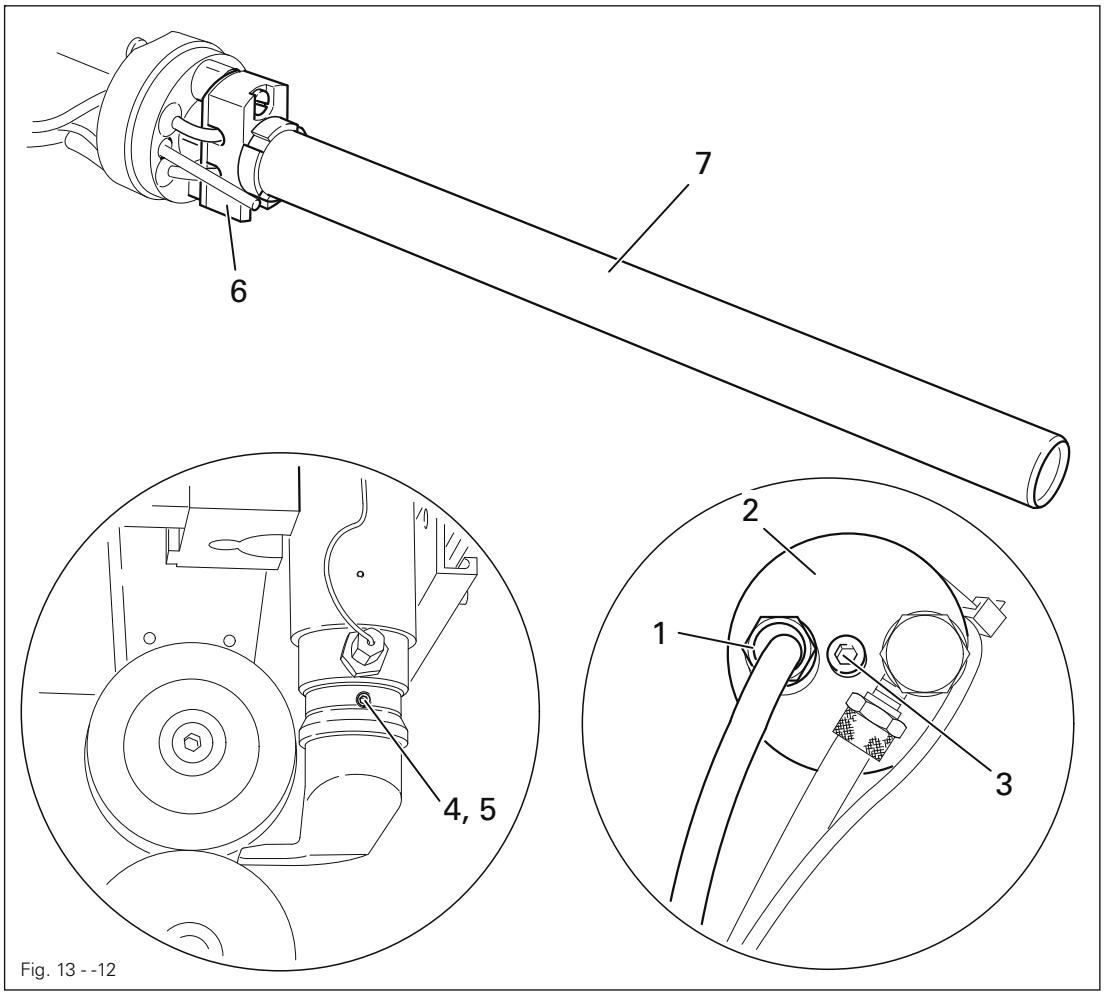

Fig. 13 - -12

Wait until the heating element has cooled down! Danger of burns!

Disconnect the mains plug!

Danger from electric voltage!

- Loosen the cable screw **1**.
- Remove cap **2** (screw **3**).
- Remove screw **4** and loosen screw **5** (underneath).
- Pull out socket **6** together with the heating cartridge **7**.
- Remove heating cartridge **7** from socket **6**.
- Installation takes place in the reverse order, taking care that screw **5** must only be tightened slightly (**max. 1 Nm**).

13.10 Changing the temperature sensor (only on the PFAFF 8320-020))

Requirement
The temperature sensor 5 should be inserted as far as possible into the hot air tube.

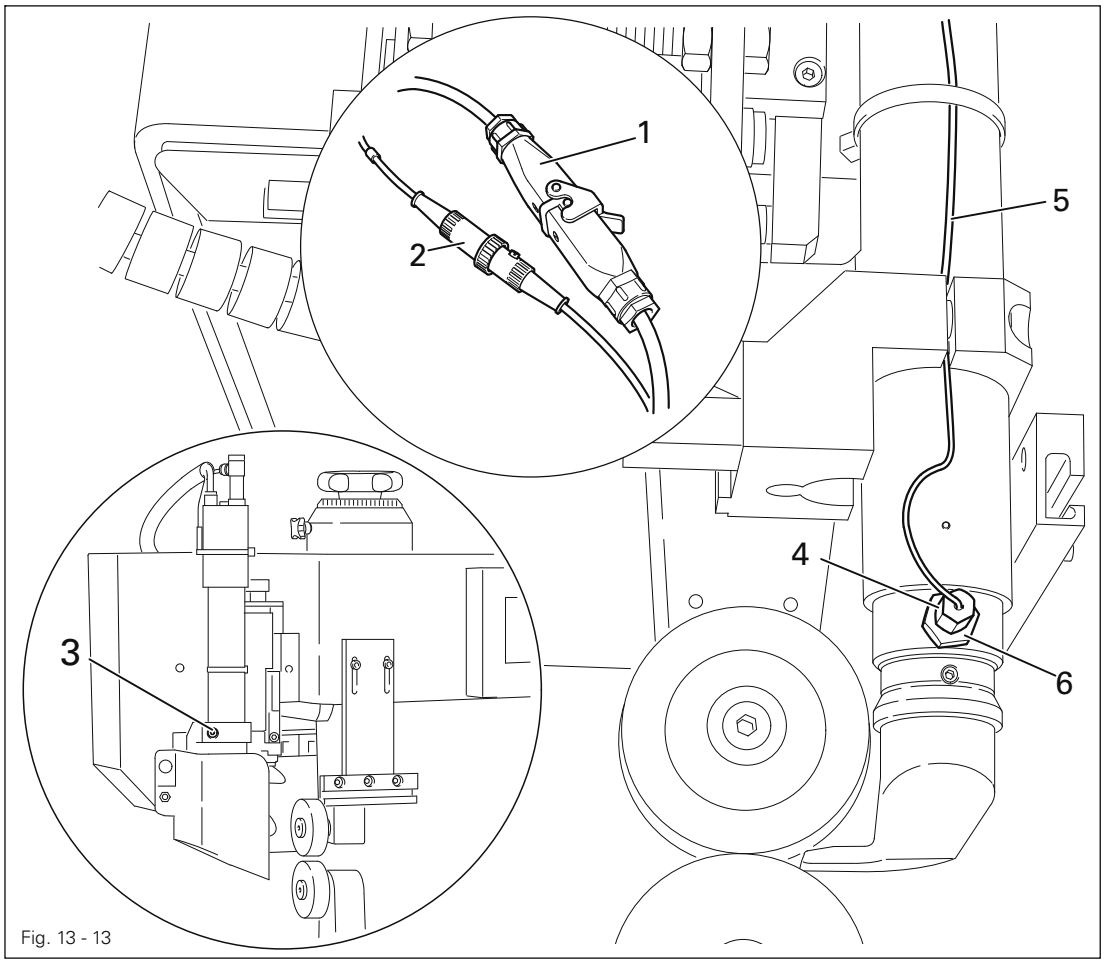

Fig. 13 - 13


Wait until the heating element has cooled down! Danger of burns!


Disconnect the mains plug!


Danger from electric voltage!

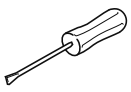

- Disconnect plug connections 1 and 2 and loosen screw 3.
- Remove nut 4 together with the temperature sensor 5.
- Attach the new temperature sensor 5 together with new nut 4.
- Slide temperature sensor 5 as far into the hot air tube as possible and fix it in this position by tightening nut 6.
- The rest of the installation takes place in the reverse order.
- Carry out adjustments as described in **Chapter 13.07.02 Adjusting the height and feed roller clearance of the hot air nozzle.**

13.11 Protective switch and boot key

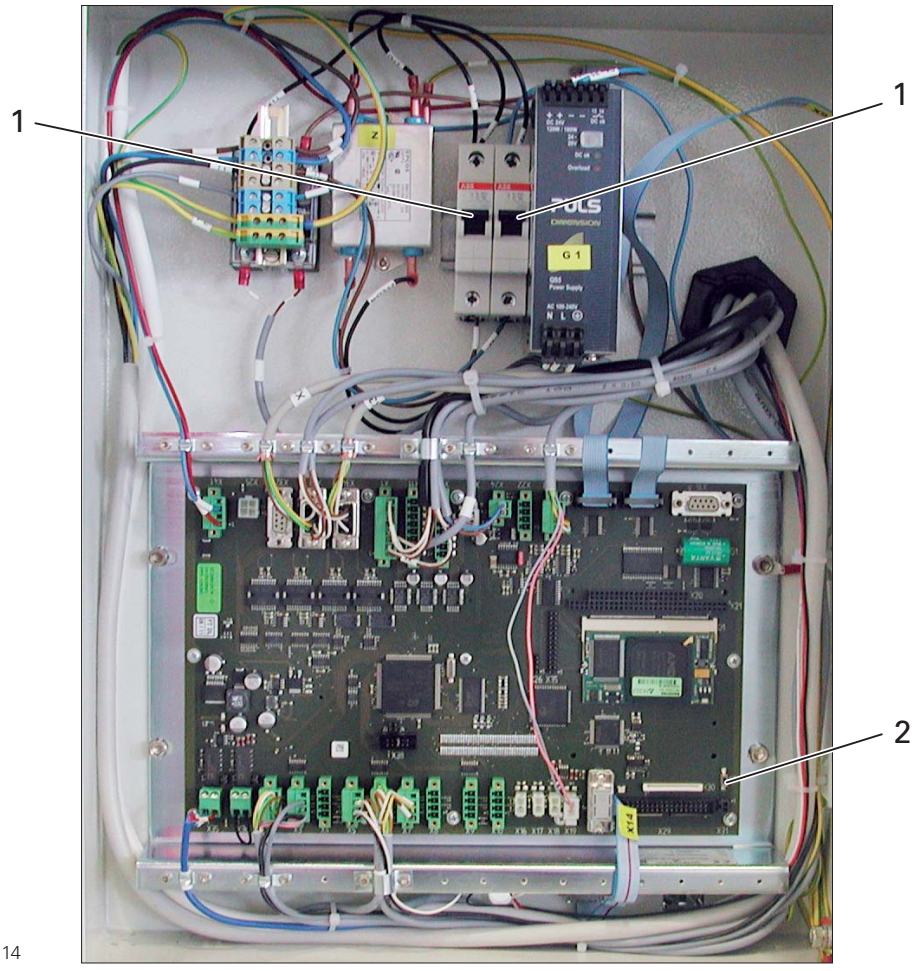

Fig. 13 - 14

The protective switch **1** serves as a protection against major damage in case of a short circuit or overload. The boot key **2** is used to boot-up the machine control unit, see **Chapter 13.11.02 Loading/updating the operating program.**

Disconnect the mains plug!

Danger from electric voltage!

Before switching the machine on again, first eliminate the cause of the fault!

- Eliminate the cause of the fault.
- Open the control box and reset protective switch **1**.
- Close the control box again.

13.12 Service menu

The status of the digital and analog inputs and outputs are displayed in the service menu. In addition it is also possible to call up functions for carrying out a cold start, for the machine configuration, for loading the operating program and for setting the control panel.

- Activate machine



- Call up the input menu.

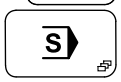

- Call up the service menu.

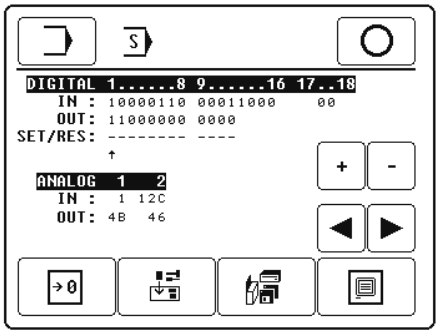

Explanation of the functions



Input menu
This function is used to change from the initial state to the input mode.



Heat sealing mode
This function is used to change to the heat sealing mode.

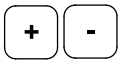

Plus/minus keys
These are used to set (+) or reset (-) the selected output.

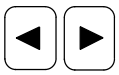

Arrow keys
These are used to select the desired outputs.

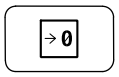

Cold start
This function is used to carry out a cold start.
After a cold start all machine parameters are set back to their original state.

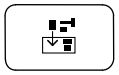

Machine configuration
This function calls up a menu for configuring the machine, see **Chapter 13.12.01 Machine configuration.**



Loading the operating program
This function is used to load the machine operating program, see **Chapter 13.12.02 Loading/updating the operating program.**



Control panel settings
This function is used to call up a menu for changing the display contrast and for switching the key tone on or off, see **Chapter 9.04 Setting the control panel.**.

13.12.01 Machine configuration

With the machine configuration function the machine control unit receives the necessary information about the attached components. If the machine components are changed, care must be taken to make the appropriate adjustment in the machine configuration.



- Switch on the machine and call up the input menu.

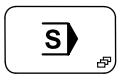

- Call up the service menu.

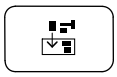

- Call up the menu for entering the machine configuration.

Machines without Puller

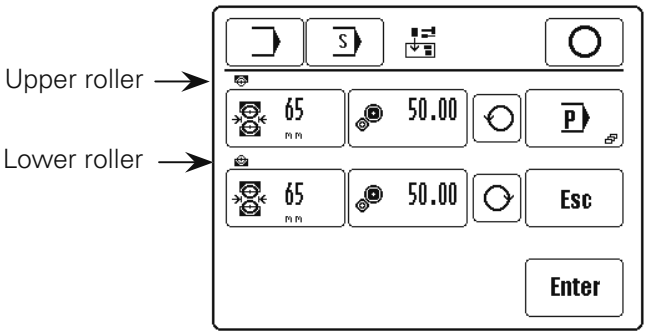

Machines with Puller

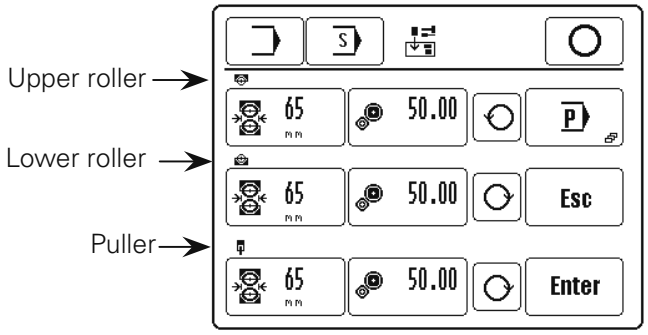

Explanation of the functions



Input menu
This function is used to change from the initial state to the input mode.



Service menu
This function is used to call up the service menu again.



Heat sealing mode
This function is used to change to the heat sealing mode.



Feed roller diameter
This function is used to enter the diameter of the feed rollers installed.



Top/bottom/carriage gear factor
These functions are used to enter the gear factor for the top and bottom roller drive

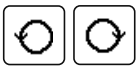

Rotational direction
This function is used to set the appropriate rotational direction of the drive.



Parameter menu
With this function, a menu appears for setting the machine parameters, see **Chapter 13.15 Parameter settings**.

Esc

Esc
The input is interrupted and the machine moves back to the initial state of the programming function.

Enter

Enter
All program changes are stored under the current program number.

13.12.02 Loading/updating the operating program with SD-Card

With the BDF - P1 panel, the software of the machine can be updated with a SD-Card. The factory software includes a bootmanager program to start the application program or to force an update.

After switch on the machine, the bootmanager checks and starts the application software. No user intervention is required.

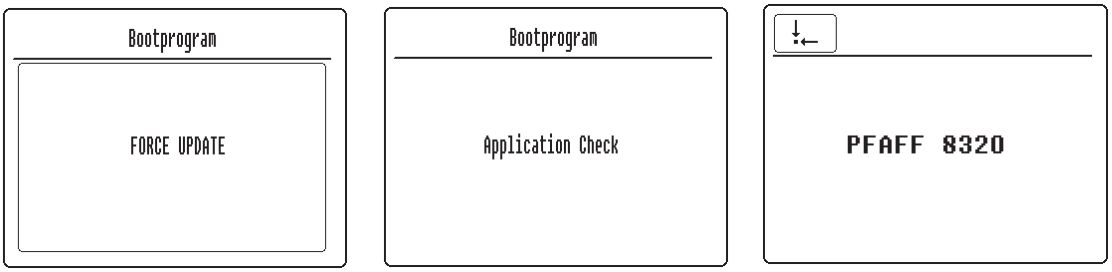

The button FORCE UPDATE must be pressed to update the operating system after switching on the machine (boot SD card inserted) and the initial screen is displayed.

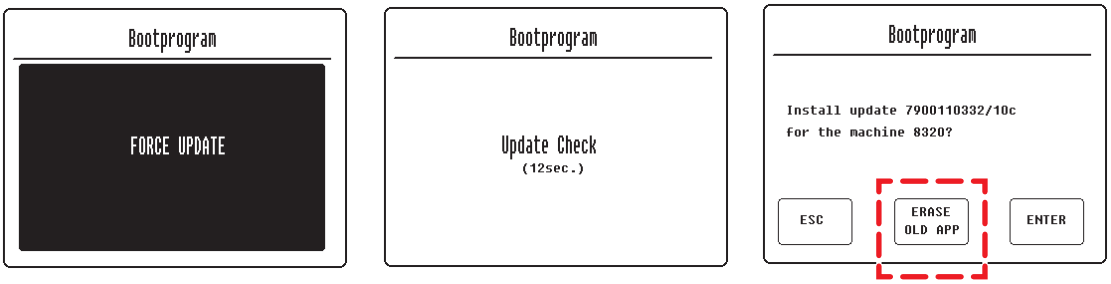

Esc Pushing the ESC key, skips the update function. The bootmanager checks and starts the old existing application software.

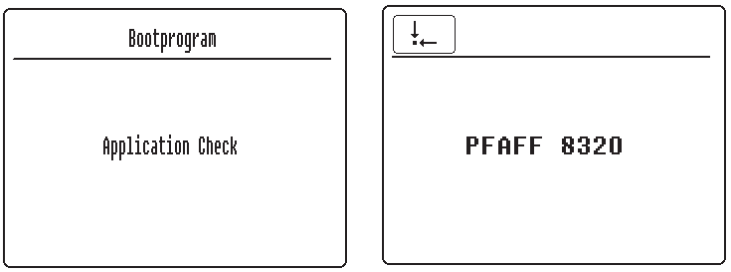

Enter Pushing the ENTER key starts the update function. First the bootmanager copies the files from SD-Card to the machine memory.

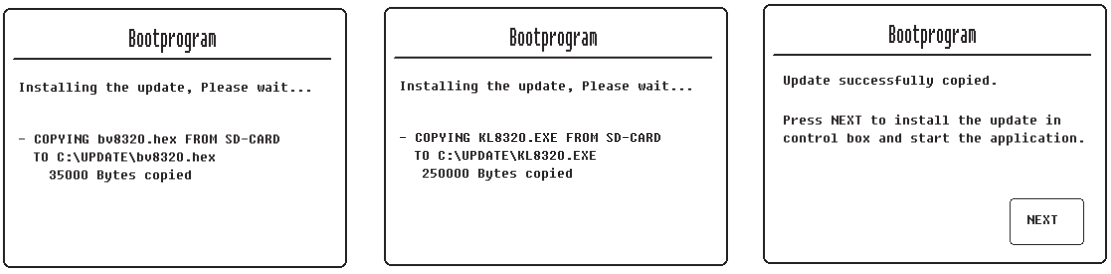

NEXT By pushing the NEXT key, the application software gets overwritten with the copied files.

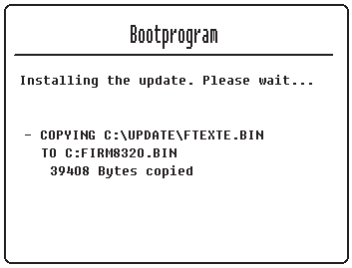

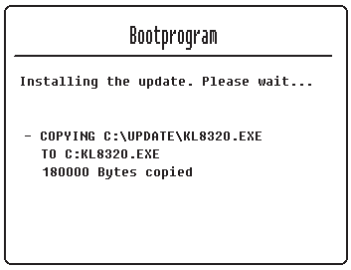

The memory is cleaned up and the bootmanager checks and starts the new application program.

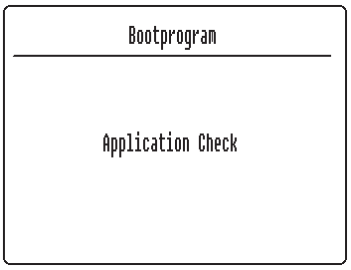

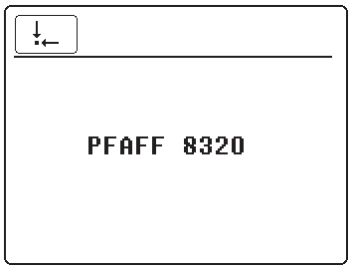



The function "ERASE OLD APP" is recommended for experienced users only!

If a software for another machinetype is loaded by mistake, these files can be erased with this function. The bootmanager queries each file before deleting.



You need a succsessful update to operate the machine again!

13.13 Description of the error numbers

13.13.01 General errors

Display	Description
ERROR: 3	Error in allocation EMS memory
ERROR: 4	C167 not reacting
ERROR: 5	Boot file (c167boot.bin) cannot be opened
ERROR: 6	Error in flash-programming
ERROR: 7	Error when opening a file
ERROR: 8	Battery
ERROR: 9	Firmware version conflict
ERROR : OPERATING DATA CHECK SUM (CARRY OUT COLD START)	Operating data check sum
NEW OPERATING SOFTWARE (CARRY OUT COLD START)	New operating software
COLD START CARRIED OUT	Cold start
ERROR: 101	C167-error
ERROR: 106	Error compressed air
ERROR: 107	Error air volume (when air volume sensor is activated)
ERROR: 110 #ERROR no. Motor	Error DC-motor 1
ERROR: 120 #ERROR no. Motor	Error DC-motor 2
ERROR: 130 #ERROR no. Motor	Error DC-motor 3 Puller (option)
ERROR: 140 #Error no. Temp. Control	Error temperature control unit
ERROR: 201	Res. speed for man. sealing outside permissible range
ERROR: 301	Program too large
ERROR: 302	Contradiction between progpar and progload
ERROR: 303	Flash read error or progr. Defect
ERROR: 304	Memory overlow
ERROR: 305	Invalid configuration
ERROR: 310	File not on source
ERROR: 311	Source reading error, file cannot be opened
ERROR: 312	Target write error, file cannot be opened
ERROR: 313	Source reading error
ERROR: 314	Target write error
ERROR: 315	File config cannot be opened
ERROR: 316	Error when opening MDAT-file
ERROR: 317	Write error in MDAT-filee
ERROR: 318	Machine data identification incorrect

Display	Description
ERROR: 319	Read error in MDAT-file
ERROR: 330 #Prog. No. #Zone No.	Program. speed > max. gear-controlled speed
ERROR: 331 #Prog. No.. #Zone No.	Programmed roller pressure > roller pressure limit
ERROR: 332 #Prog. No.. #Zone No.	Speed and differential outside permissible values
ERROR: 340 # Zone No.	Selected temperature too high
ERROR: 341 # Zone No.	Air volume does not match nozzle type
ERROR: 342 # Zone No.	Programmed sealing off not plausible
ERROR: 343 # Zone No.	Programmed output (OUT) not plausible
ERROR: 344 # Program No.	Program not for this machine, nozzle/wedge
PROGRAM XX NOT IN MEMORY	Program XX does not exist
ERROR: 401	Text file cannot be opened
ERROR: 402	Error in read text file
ERROR: 501	Error when opening file "pikto.hex" or "vorlagen. hex" disconnect error
ERROR: 502	No ACK from control panel Disconnect error

13.13.02 Temperature control error

Error number	Discription
0	No error
1	Thermoelement **1** disconnection (HW-alarm-bit)
2	Control circuit not reacting
3	Temperature window (alarm) exceeded
4	No temperature increase despite of controller full scale (heating cartridge defective or thermo element slipped from holder)

13.13.03 DC-motors error (Feed rollers)

Error number	Discription
0	No error
10	Incorrect command code
11	Invalid speed
12	Invalid acceleration
13	Start with dead motor
14	Set differential with master
15	Contouring error
16	Overload current
17	Over 5 V positioning voltage with standing motor (possible cause: Load moment (tension, surge, stationary rollers, if necessary too large differential tolerance)

13.14 List of outputs and inputs

13.14.01 Digital Outputs

HWTerm	SWTerm	Function	Remark
AUS 1 X1/1	Y1	Roller down (reduced pressure)	Valve
AUS 2 X1/3	Y2	Additional blowing	Valve
AUS 3 X1/5	Y3	Nozzle/wedge engaged	Valve
AUS 4 X1/7	Y4	Nozzle/wedge forwards	Valve
AUS 6 X11/3	OUT1	Programmable output 1	
AUS 7 X11/5	OUT2	Programmable output 2	
AUS 10 X12/3	Y5	Closing cylinder Puller (option)	Valve

13.14.02 Digital Inputs

HWTerm	SWTerm	Function
EIN 1 X2/2	E1	Roller lowered
EIN 2 X2/3	E3	Nozzle/wedge engaged
EIN 3 X3/2	E4	Nozzle/wedge forwards
EIN 4 X3/3	E10	Code input wedge/air
EIN 5 X4/2	E12	free
EIN 6 X4/3	E13	free
EIN 7 X5/2	E11	Pressure monitor
EIN 8 X5/3	E14	Knee switc
EIN 9 X6/2	E15	Increment differential
EIN 10 X6/3	E16	Decrement differential
EIN 11 X7/2	E17	Differential correction zero
EIN 12 X7/3	E18	Lock/release key-switch for functions
EIN 13 X8/2	IN1	Programmable input 1
EIN 14 X8/3	IN2	Programmable input 2

13.14.03 Analog Outputs

HWTerm	SWTerm	Function	Remark
Puller X32	DC-Motor 3	Puller (option)	DC Motor
Roller up X33	DC-Motor 2	Roller motor up (slave)	DC Motor
Roller down X34	DC-Motor 1	Roller motor down (master)	DC Motor
SSR_EIN X13	SSR-control	Heating capacity control unit	PWM
X24	LUFTOUT	Air volume control	prop. Valve
X23	RDRUCKOUT	Roller pressure set value	Pressure regulating valve

13.14.04 Analog Inputs

HWTerm	SWTerm	Function
AE4 X19/2	RDRUCKIN	Roller pressure regulator actual value control
Pedal X14/8	Pedal	Analog pedal
X35	Temp	Temperature sensor

13.15 Parameter settings

All changeable parameters are listed in the parameter list, see Chapter **13.15.02 List of parameters**. Parameter selection as well as changing the values is described below.

13.15.01 Selection and changing parameters



- Switch on the machine and call up the input menu.

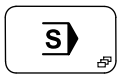

- Call up the service menu.

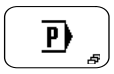

- Call up the Parameter menu.

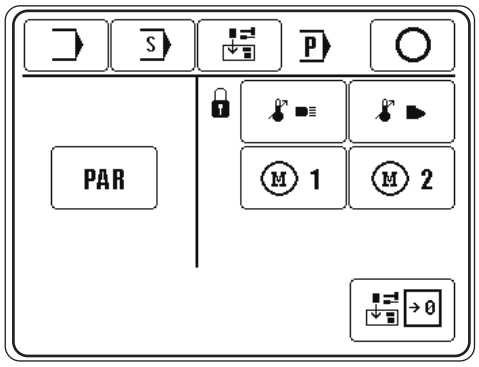



- Call up parameter entry.

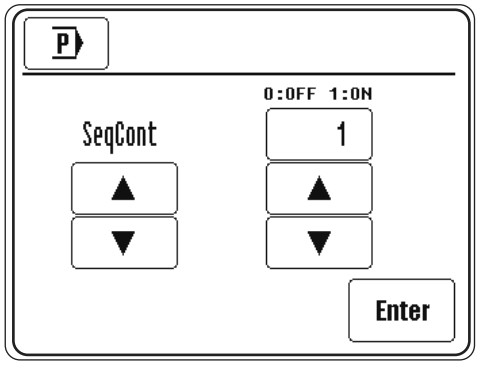



- Select parameter.

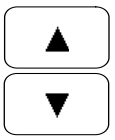

- Change the value of the selected parameter.



- Exit parameter entry.

13.15.02 List of parameters



Only appropriately trained personnel is authorized to alter the set values in the parameters!

Parameter	Discription	Setting range	Set value
Sequence continue	0: Process sequence program as quick key selection. 1: Sequence programs are automatically relayed.	0 - 1	1
Enable Manprog	0: Manual data records cannot be saved or loaded. 1: Manual data records can be saved and loaded as programs in area 130..149. (see chap. 11.05)	0 - 1	0
VQLIM	if positive: error #17 boundary stress if negative: max. stress at standstill	+/- 2400	500
Powertest	Only on the 8320-010 0: function deactivated 1: display of heating input at hot wedge	0 - 1	0
Stop with IN1	0: IN1 as zone forwarding condition in programs 1: digital Stop signal at input IN1	0 - 1	0
Start with IN2	0: IN2 as zone forwarding condition in programs 1: digital Start signal at input IN2	0 - 1	0
Temp sensors	Only on the 8320-020 Number of temperature sensors	1 -2	1
Flow control	0: function deactivated 1: Air volume monitoring	0 - 1	0
Enable Puller	Option 0: No additional puller installed 1: Additional puller activating	0 - 1	0
LinkRollerPuller	Only visible with active puller 0: Puller is lifted or lowered with puller button 1: Puller follows the movement of upper roller	0 - 1	0

14 Circuit diagrams

14.01 Reference list for the Circuit diagrams 95-211 948-95

A1	Control device PCS 2002
A2	Control panel (BDF T1 or P1)
A3	Floppy disk (option)
B1	Temperature sensor
B2	Pedal
M1	DC motor bottom roller
M2	DC motor top roller
M3	Puller motor (option)
E1	Bottom roller
E3	Nozzle/wedge engaged
E4	Front nozzle/wedge
E5	Hot air heating element
E6	Hot wedge heating element (1)
E7	Hot wedge heating element (2)
E10	Nozzle/wedge coding input
E11	Pressure controller
E14	Knee switch
E15	Increment differential
E16	Decrement differential
E17	Differential correction zero
E18	Key switch
AUS11	Monitorausgang Start / Stop
AUS12	Monitorausgang Fehler
IN1	Programmable input 1
IN2	Programmable input 2
F1	Fuse 16A L1
F2	Fuse 16A L2
G1	Power supply –24V, 5A
K1	Solid state relay
Q1	Main switch
Y1	Roller down
Y2	Additional blowing
Y3	Engage nozzle/wedge
Y4	Front nozzle/wedge
Y5	Closing cylinder puller (option)
Y50	Air volume
Y51	Roller pressure
Z1	Mains filter

14.02 Circuit diagrams 95-211 948-95

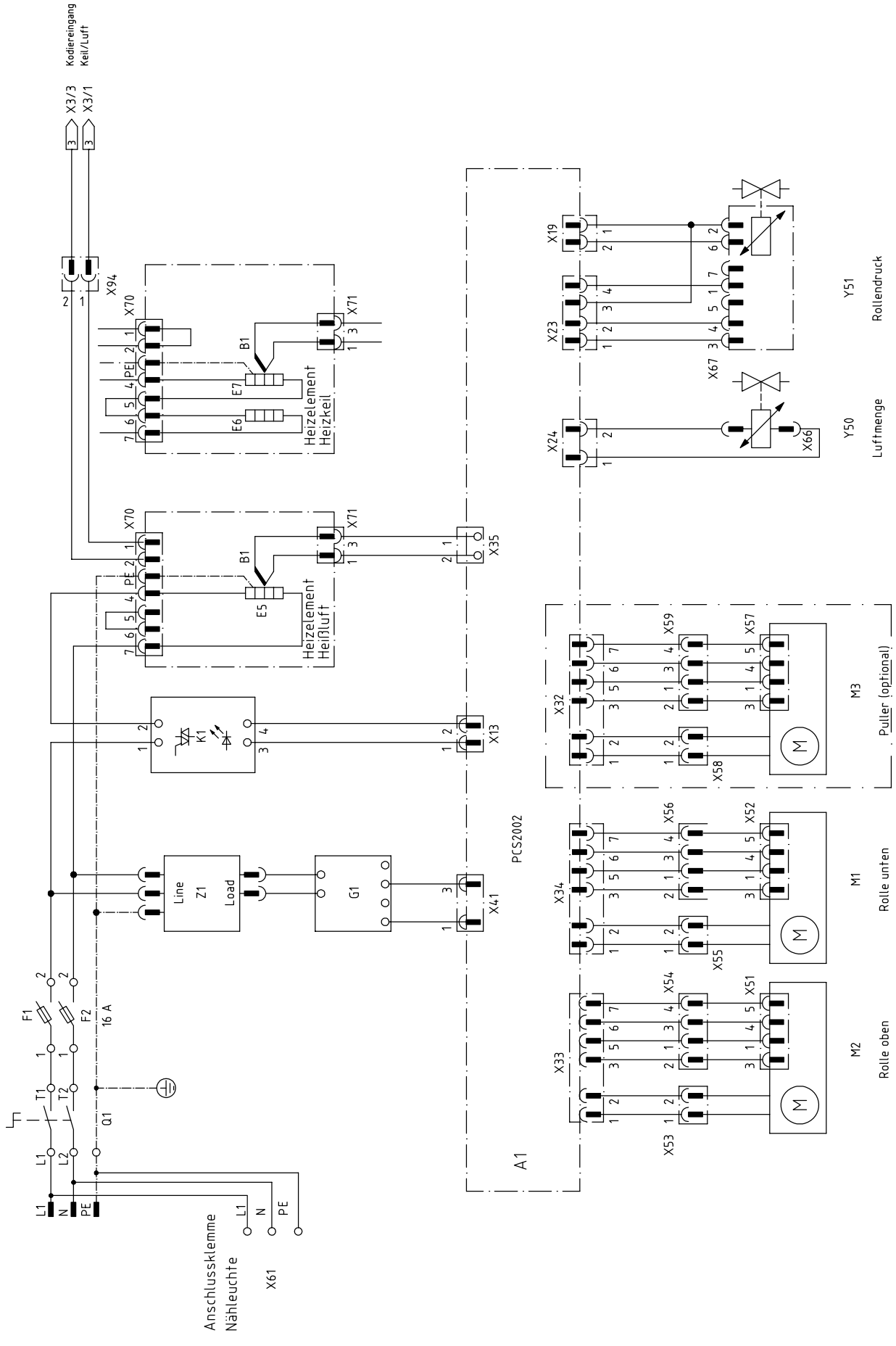

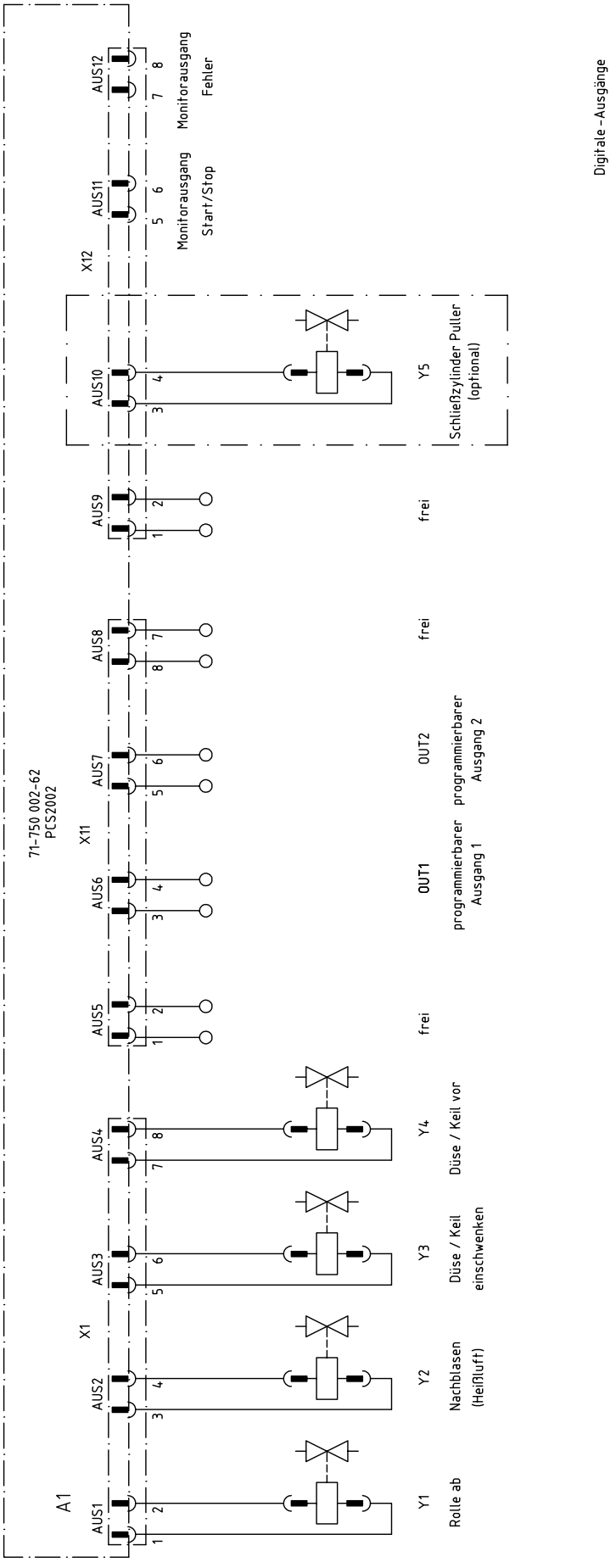
A1
71-750 002-62
PCS2002
X1
X11
X12
AUS1
AUS2
AUS3
AUS4
AUS5
AUS6
AUS7
AUS8
AUS9
AUS10
AUS11
AUS12
Y1
Rolle ab
Y2
Nachblasen
(Heißluft)
Y3
Düse / Keil
einschwenken
Y4
Düse / Keil vor
frei
OUT1
programmierbarer
Ausgang 1
OUT2
programmierbarer
Ausgang 2
frei
frei
Y5
Schließzylinder Puller
(optional)
Monitorausgang
Start/Stop
Monitorausgang
Fehler
Digitale - Ausgänge

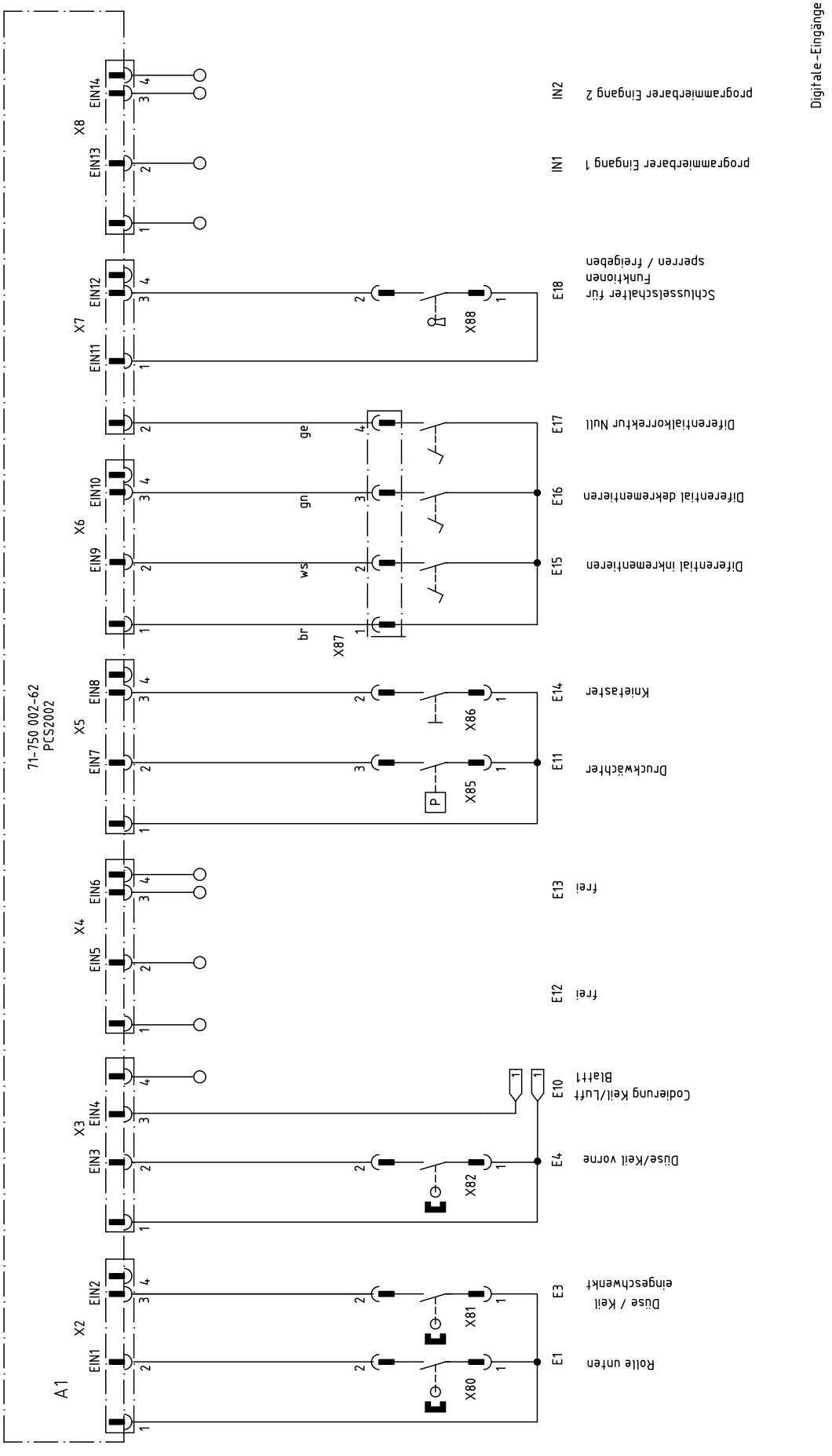
Digitale-Eingänge
IN2 programmierbarer Eingang 2
IN1 programmierbarer Eingang 1
E18 Schlüsselschalter für Funktionen sperren / freigeben
E17 Differentialkorrektur Null
E16 Differential dekrementieren
E15 Differential inkrementieren
E14 Kniefaster
E11 Druckwächter
E13 frei
E12 frei
E10 Codierung Keil/Luft Blatt1
E4 Düse/Keil vorne
E3 Düse / Keil eingeschwenkt
E1 Rolle unten
A1
71-750 002-62
PCS2002
X2 EIN1 EIN2
X3 EIN3 EIN4
X4 EIN5 EIN6
X5 EIN7 EIN8
X6 EIN9 EIN10
X7 EIN11 EIN12
X8 EIN13 EIN14
X80 X81 X82 X85 X86 X87 X88
br ws gn ge
P

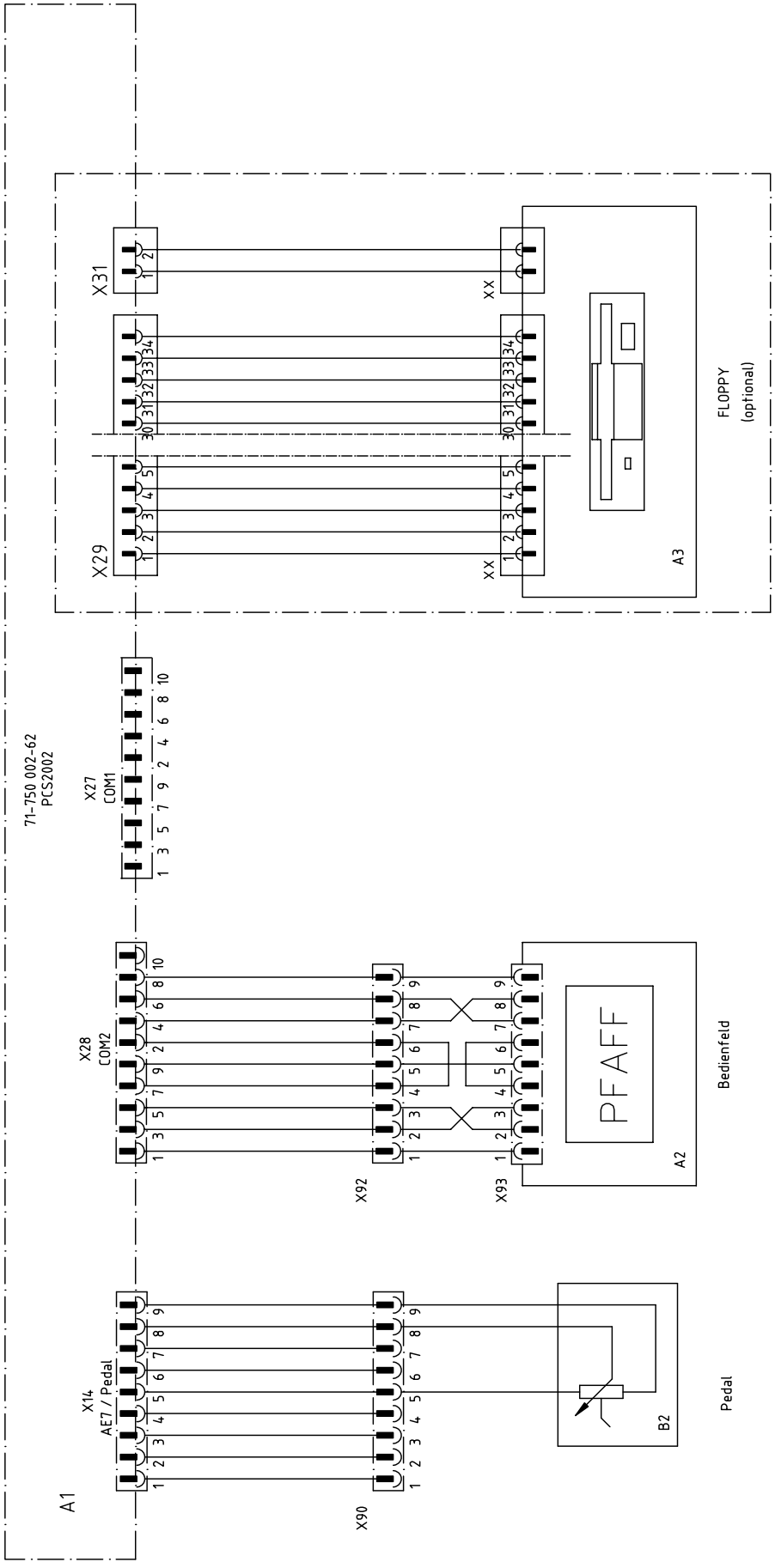
A1
71-750 002-62
PCS2002
X14
AE7 / Pedal
X27
COM1
X28
COM2
X29
X31
X90
X92
X93
XX
XX
A2
A3
B2
PFAFF
Bedienfeld
FLOPPY
(optional)
Pedal

15 Pneumatic-circuit diagrams

The pneumatics circuit diagram is shown with the machine in its basic position. Energy (air and electricity) is switched on. The components take on fixed conditions.

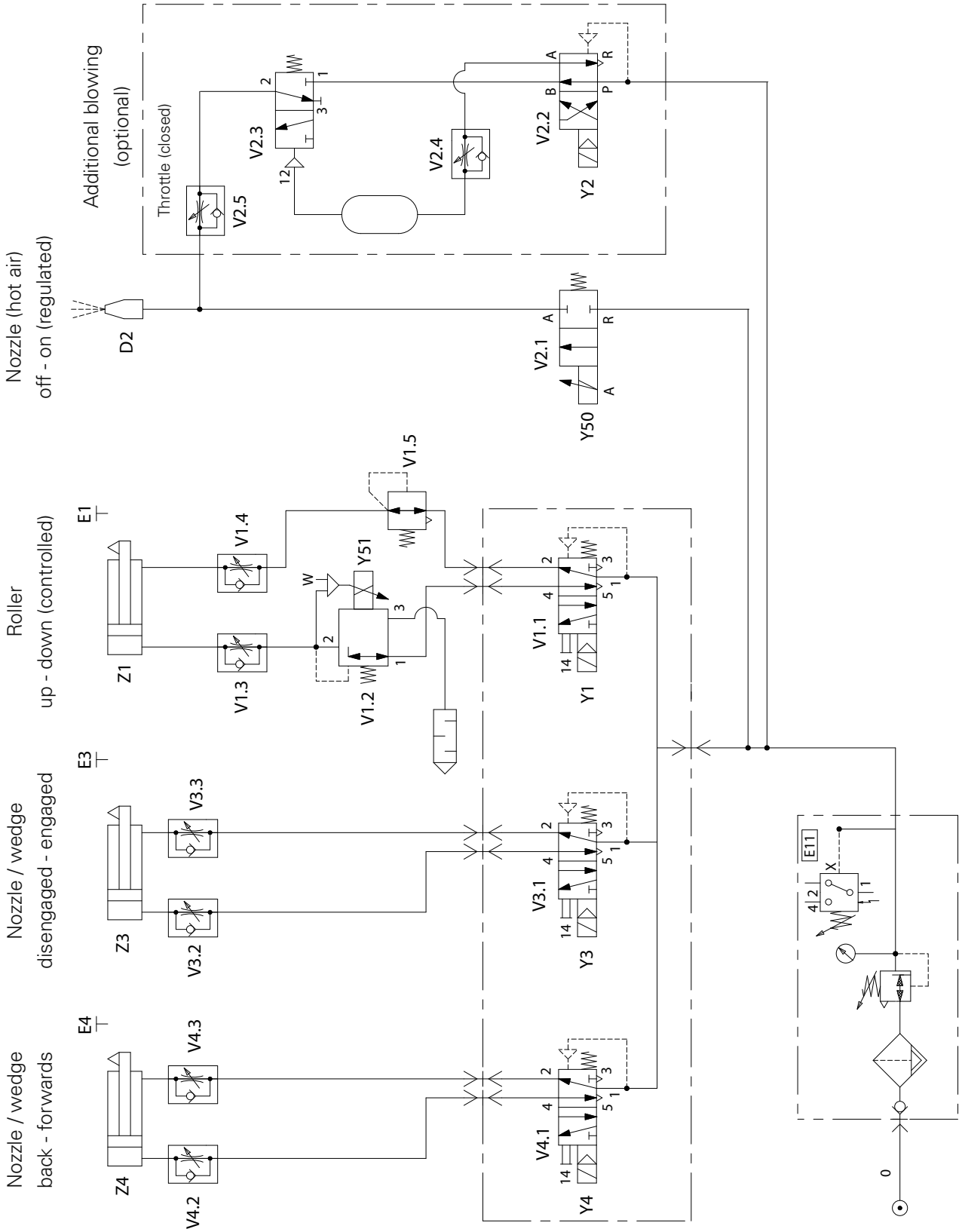

PFAFF® Industrial



Europäische Union
Wachstum durch Innovation – EFRE



PFAFF Industriesysteme
und Maschinen AG

Hans-Geiger-Str. 12 - IG Nord
D-67661 Kaiserslautern

Phone: +49-6301 3205 - 0
Fax: +49-6301 3205 1386
E-mail: info@pfaff-industrial.com

Hotlines:
Technical service: +49-175/2243-101
Application consultance: +49-175/2243-102
Spare-parts hotline: +49-175/2243-103

Printed in Germany

© PFAFF Industriesysteme und Maschinen AG 2009, PFAFF is the exclusive trademark of VSM Group AB.PFAFF Industriesysteme und Maschinen AG is an authorized licensee of the PFAFF trademark.