PFAFF® Industrial

8362-004 -045

INSTRUCTION MANUAL

This instruction manual applies to machines from the following serial numbers onwards:
15186 →

296-12-18 496/002
Betriebsanleitung engl. 06.09

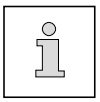

This Instruction Manual is valid for all models and subclasses listed in the chapter "Specifications ".

The reprinting, copying or translation of PFAFF Instruction Manuals, whether in whole or in part, is only permitted with our previous authorization and with written reference to the source.

PFAFF Industriesysteme
und Maschinen AG

Hans-Geiger-Str. 12 - IG Nord
D-67661 Kaiserslautern

Contents ..... Chapter - Page

1	Safety	1 - 1
1.01	Directives	1 - 1
1.02	General notes on safety	1 - 1
1.03	Safety symbols	1 - 2
1.04	Important points for the user	1 - 2
1.05	Operating and specialist personnel	1 - 2
1.05.01	Operating personnel	1 - 2
1.05.02	Specialist personnel	1 - 3
1.06	Danger	1 - 3
2	Proper use	2 - 1
3	Specifications	3 - 1
4	Disposal of the machine	4 - 1
5	Transport, packaging and storage	5 - 1
5.01	Transport to the customer	5 - 1
5.02	Transport within the customer's premises	5 - 1
5.03	Disposal of the packaging	5 - 1
5.04	Storage	5 - 1
6	Explanation of the symbols	6 - 1
7	Controls	7 - 1
7.01	Summary of the control elements	7 - 1
7.02	Mains switch	7 - 2
7.03	Controller for the heat-sealing temperature	7 - 2
7.04	Controller for the heat-sealing speed	7 - 3
7.05	Selection switch for the operating mode	7 - 3
7.06	Selection switch for the operating direction	7 - 4
7.07	Lever for engaging the hot wedge	7 - 4
7.08	Lever for lowering the feed roller	7 - 5
8	Commissioning the machine	8 - 1
8.01	Connecting the machine to the power supply	8 - 1
8.02	Switching the machine on/off	8 - 2
9	Preparation	9 - 1
9.01	Seal types	9 - 1
9.02	Replacing the feed rollers	9 - 2
9.03	Adjusting the feed-roller clearance	9 - 3
9.03.01	Adjusting the feed-roller clearance on the PFAFF 8362-004	9 - 3
9.03.02	Adjusting the feed-roller clearance on the PFAFF 8362-045	9 - 3
9.04	Adjusting the heat-sealing pressure	9 - 4
9.04.01	Adjusting the heat-sealing pressure on the PFAFF 8362-004	9 - 4

	Contents ..... Chapter - Page	
9.04.02	Adjusting the heat-sealing pressure on the PFAFF 8362-045	9 - 4
9.05	Adjusting the clearance between the heating wedge and the feed rollers	9 - 5
9.05.01	Adjusting the heating-wedge clearance on the PFAFF 8362-004	9 - 5
9.05.02	Adjusting the heating-wedge clearance on the PFAFF 8362-045	9 - 6
9.06	Adjusting the workpiece guides	9 - 7
9.06.01	Adjusting the upper rear workpiece guide	9 - 7
9.06.02	Adjusting the lower rear workpiece guide	9 - 8
9.06.03	Adjusting the front workpiece guides	9 - 8
9.07	Adjusting the heat-sealing speed / heat-sealing temperature	9 - 9
10	**Heat sealing**	**10 - 1**
10.01	The heat-sealing principle	10 - 1
10.02	Inserting the workpieces	10 - 2
10.03	Aligning the workpieces	10 - 3
10.04	Heat-sealing the workpieces	10 - 4
10.04.01	Guiding the machine manually	10 - 4
10.04.02	Heat-sealing with a guide	10 - 5
10.05	Stopping the machine	10 - 5
10.06	Testing the seal	10 - 6
10.06.01	Testing the seal strength	10 - 6
10.06.02	Testing the tightness of the seal	10 - 6
10.07	Malfunctions during the heat-sealing operation cycle	10 - 6
11	**Care and maintenance**	**11 - 1**
11.01	Checking the cable and plug connections	11 - 1
11.02	Cleaning the heating wedge	11 - 1
11.03	Replacing and grinding-in the heating wedge	11 - 2
11.03.01	Changing the hot wedge on the PFAFF 8362-004	11 - 2
11.03.02	Grinding in the hot wedge (only on the PFAFF 8362-004)	11 - 3
11.03.03	Replacing the heating wedge on the PFAFF 8362-045	11 - 4
11.04	Replacing the fuse	11 - 5
11.05	Lubricating the drive chains	11 - 6
11.06	Tensioning the drive chain of the lower feed-roller	11 - 6
11.07	Tensioning the drive chain of the upper feed-roller	11 - 7

1 Safety

1.01 Directives

This machine was built in accordance with the European regulations listed in the Conformity decalaration and Manufacturer's declaration

In addition to this Instruction manual, also observe all generally accepted, statutory and other regulations and legal requirements - also those of the country in which the machine will be operating - and all valid environmental-protection regulations!
The regionally valid regulations of the social insurance society for occupational accidents or other supervisory organisations are to be strictly adhered to!

1.02 General notes on safety

- This machine must only be operated by adequately trained operators and only after having completely read and understood the Instruction manual!
- The Danger and Safety instructions on the machine itself are to be followed!
- The machine must only be used for the purpose for which it is intended and must not be operated without its safety devices. Observe all relevant safety regulations!
- When replacing the feed rollers or the heating wedge, when leaving the workplace unattended, and during servicing, the machine must be disconnected from the mains by removing the plug from the electrical socket!
- Daily servicing work must only be carried out by appropriately trained persons!
- Repairs and special maintenance work must only be carried out by technicians or persons with appropriate training!
- Work on the electrical equipment must only be carried out by electricians or appropriately trained personnel!
- Work is not permitted on parts and equipment which are connected to the power supply! Exceptions to this are contained in the regulations EN 50110!
- Modifications and alterations to the machine must only be carried out under observance of all the relevant safety regulations!
- Only spare parts which have been approved by us are to be used for repairs! We expressly point out that any replacement parts or accessories which are not supplied by us, have not been tested and approved by us. The installation and/or use of any such products can lead to negative changes in the structural characteristics of the machine. We shall not be liable for any damage which may be caused by non-original parts!

1.03 Safety symbols



Danger!
Points to be observed.



Danger point!
Danger of injury to operating or specialist personnel!



Hot surface!
Danger of burns to operating or specialist personnel!



Electric voltage!
Danger to operating or specialist personnel from electric voltage!

1.04 Important points for the user

- This Instruction manual is a component part of the machine and must be available to the operating personnel at all times.
- The operating and specialist personnel are to be instructed as to the safety equipment of the machine and with regard to safe working methods.
- It is the duty of the operator to only operate the machine when it is in perfect running order.
- It is the obligation of the operator to ensure that none of the safety mechanisms are removed from the machine or deactivated.
- It is the obligation of the operator to ensure that only authorized persons operate and work on the machine.
- The user must make sure there is no high-frequency welding equipment being operated in direct proximity to the machine that exceeds the EMC limit values according to EN 60204-31 for the machine.

Further information can be obtained at the point of sale.

1.05 Operating and specialist personnel

1.05.01 Operating personnel

Operating personnel are persons responsible for the preparation, operating and cleaning of the machine as well as eliminating any faults arising.

The operating personnel are obliged to observe the following points and must:

- always observe the Notes on safety in the Instruction manual!
- never use any working methods which could limit the level of safety in using the machine!
- also ensure that only authorized persons have access to the potentially dangerous area around the machine!
- always immediately report to the person responsible any changes in the machine which may limit its safety!

1.05.02 Specialist personnel

Specialist personnel are persons with a specialist education in the fields of electrics, electronics and mechanics. They are responsible for the lubrication, maintenance, repair and adjustment of the machine.

The specialist personnel is obliged to observe the following points and must:

- always observe the Notes on safety in the Instruction manual!
- Remove the machine from the power supply by removing the plug from the electrical socket before carrying out adjustments or repairs and ensure that it cannot be switched on again unintentionally!
- never work on parts which are still connected to the power supply! Exceptions are contained in the regulations EN 50110.
- replace the protective coverings and close the electrical control box after all repairs or maintenance work!

1.06 Danger

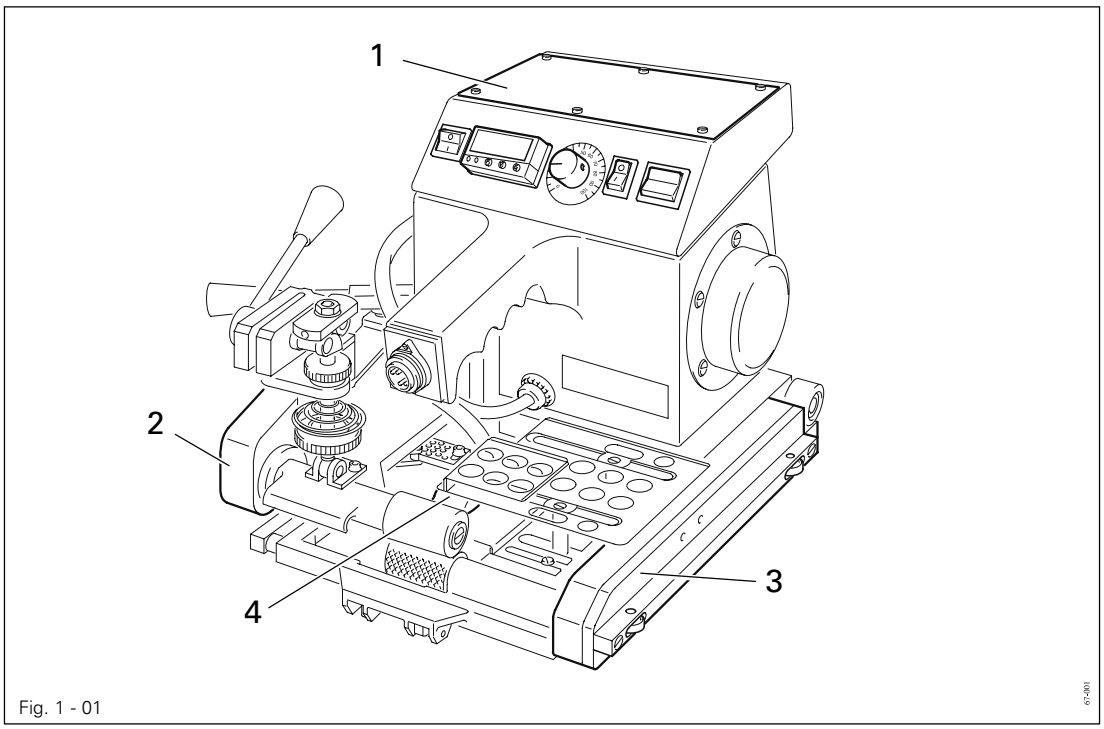

Fig. 1 - 01



Before opening the cover **1** always disconnect the plug from the mains!
Danger of injury from electric voltage!



Never operate the machine without chain guards **2** and **3**!
Danger of injury due to the rotating chain!



After use always let the machine cool down first!
Danger of burns from the hot surface of hot wedge **4**!

2 Proper use

The PFAFF 8362 is a heating-wedge manual heat-sealing machine with self-drive.

The machine manufactures overlapping heat-seals, with or without a test channel, on plastics suitable for this purpose (thermoplastics), such as truck awnings, pool covers, roof and building insulations etc.



The machine must not be operated outdoors!



Any and all uses of this machine which have not been approved of by the manufacturer are considered to be inappropriate! The manufacturer cannot be held liable for any damage caused by the inappropriate use of the machine! The appropriate use of the machine includes the observance of all operational, adjustment, maintenance and repair measures required by the manufacturer!

3 Specifications

Models:
8362-004 ..... Standard model
8362-045 ..... Higher heat-sealing performance compared to the standard model

Dimensions and weight:
Length: ..... approx. 400 mm
Width: ..... approx. 300 mm
Height: ..... approx. 260 mm

Weight: ..... approx. 9 kg

Power supply:
set for: ..... 230 V ± 10%, 50/60 Hz, 1 Phase
can be reconnected to: ..... 115 AC, L/N/PE

Power consumption:
8362-004 ..... 400 W
8362-045 ..... 500 W
Heating performance: ..... 400 W / 220 V
Motor: ..... 24V, 2,5 A regulated

Heat-sealing pressure: ..... 200 N

Heat-sealing temperature: ..... up to 500 °C infinitely adjustable

Max. heat-sealing speed: ..... 7.0 m/min.

Seal widths:
Overlapped seal without test channel: ..... 20 - 40 mm
Overlapped seal with test channel: ..... as required

Max. overlap of the workpieces: ..... 80 mm

Sealable materials: .....
- PVC
- PE - HD
- PE - LD
- EVA
- others

Type of foil: .....
- thermally sealable
- flexible

Sealable foil thicknesses *: ..... 0.3 - 2.5 mm

* Depending on material

4 Disposal of the machine

- The proper disposal of the machine is the responsibility of the customer.
- The materials used on the machine are steel, aluminium, brass and various plastics. The electrical equipment consists of plastics and copper.
- The machine is to be disposed of in accordance with the locally valid environmental protection regulations.



Special care is to be taken that parts soiled with lubricants be separately disposed of in accordance with the locally valid environmental protection regulations!

5 Transport packaging and storage

5.01 Transport to the customer's premises

Within Germany, the machine is delivered without packaging. Machines are packaged for export.

5.02 Transport within the customer's premises

The manufacturer carries no liability for transport within the customer's premises or to other locations where it is to be used.

5.03 Disposal of the packaging

The packaging of these machines consists of paper, cardboard and VCE fibre.
The proper disposal of the packaging is the responsibility of the customer.

5.04 Storage

The machine can be stored for up to 6 months if not in use. During this time it should be protected from dust and moisture.
For longer storage the individual parts of the machine, especially the moving parts, should be protected against corrosion e.g. by a film of oil.

6 Explanation of the symbols

In the following section of this Instruction manual, certain tasks or important pieces of information are accentuated by symbols. The symbols used have the following meanings:



Note, information



Clean, care



Lubrication, greasing, oiling

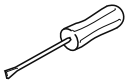

Servicing, repair, adjustment, maintenance

7 Controls

7.01 Summary of the control elements

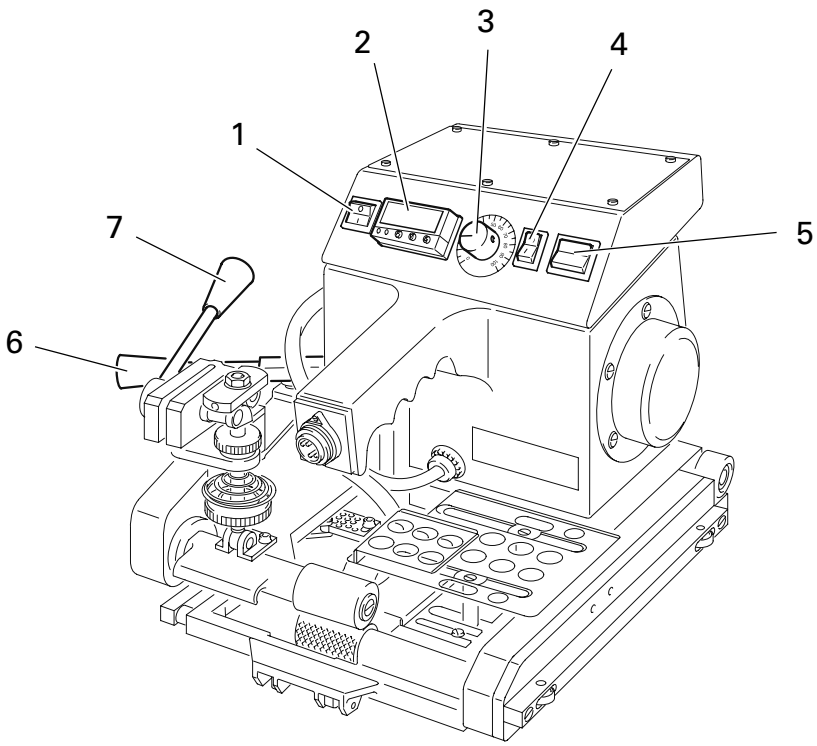

Fig. 7 - 01

1. Mains switch, see **Chapter 7.02**.
2. Microprocessor controller for the heat-sealing temperature, see **Chapter 7.03**.
3. Controller for the heat-sealing speed, see **Chapter 7.04**.
4. Selection switch for the operating mode, see **Chapter 7.05**.
5. Selection switch for the operating direction, see **Chapter 7.06**.
6. Lever for engaging the hot wedge, see **Chapter 7.07**.
7. Lever for lowering the top feed roller, see **Chapter 7.08**.

7.02 Mains switch

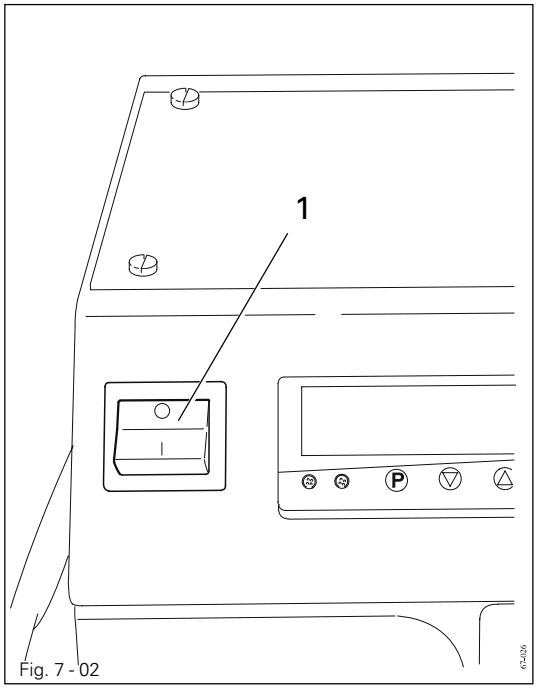

Fig. 7 - 02

By pressing the mains switch **1** the machine is switched on or off.

Position "**0**" : Machine is switched off
Position "**1**" : Machine is switched on

When switching off the machine, please observe the notes in **Chapter 8.02 Switching the machine on/ off!**

7.03 Controller for the heat-sealing temperature

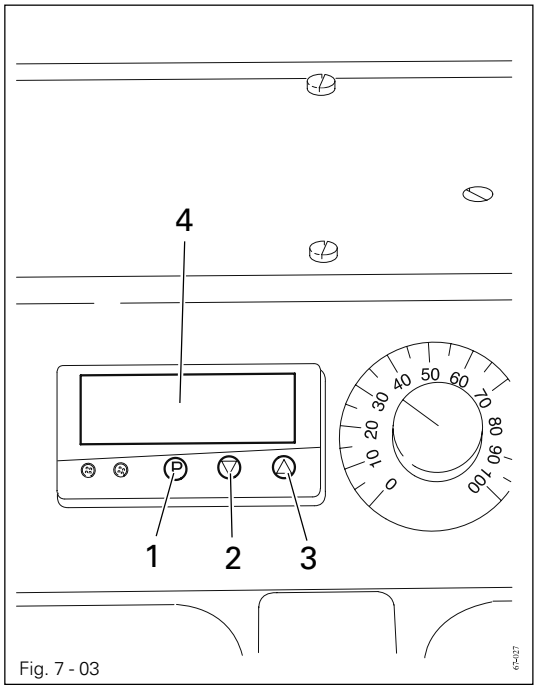

Fig. 7 - 03

After pressing button **1** the heat-sealing temperature can be reduced with button **2** or increased with button **3**.

The actual temperature of the hot wedge is shown on display **4**.

7.04 Controller for the heat-sealing speed

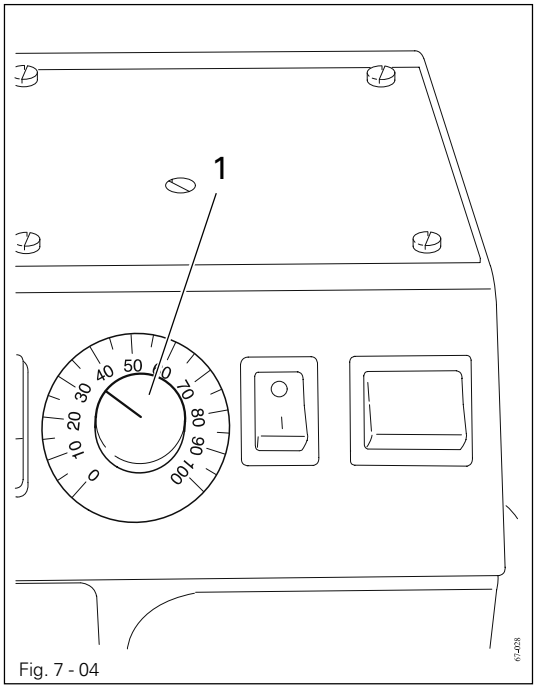

Fig. 7 - 04

- The heat-sealing speed can be altered by turning controller **1**.

7.05 Selection switch for the operating mode

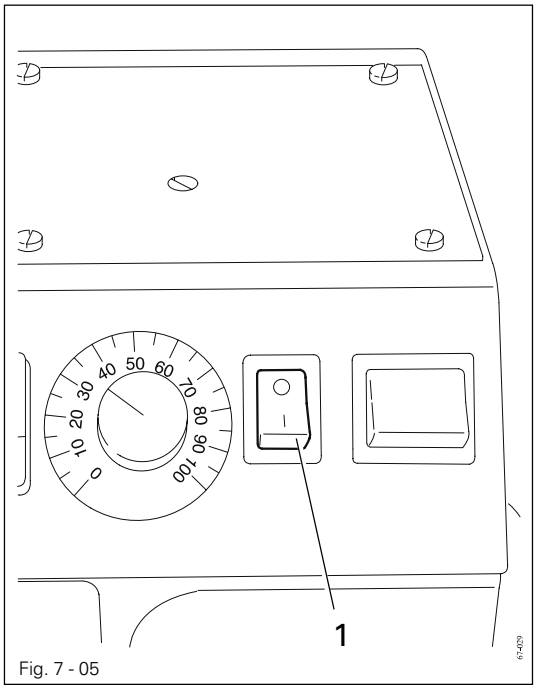

Fig. 7 - 05



The operating mode can be selected by pressing switch **1**.

Position "**0**": Feed rollers start after the hot wedge has been engaged

Position "**1**": Feed rollers run constantly

7.06 Selection switch for the operating direction

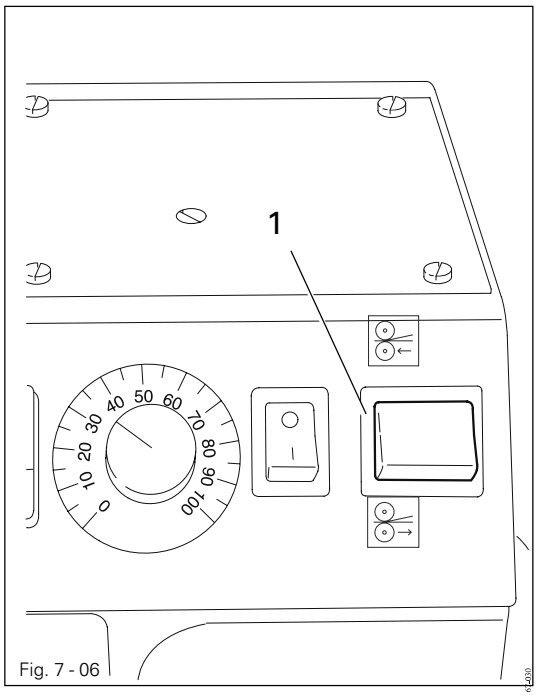

Fig. 7 - 06

- The operating direction of the feed rollers can be selected by pressing switch **1**.



Top position:
Feed rollers run forwards (for heat sealing)

Middle position:
Feed rollers are standing still



Bottom position:
Feed rollers run backwards (for grinding in the hot wedge)

7.07 Lever for engaging the hot wedge

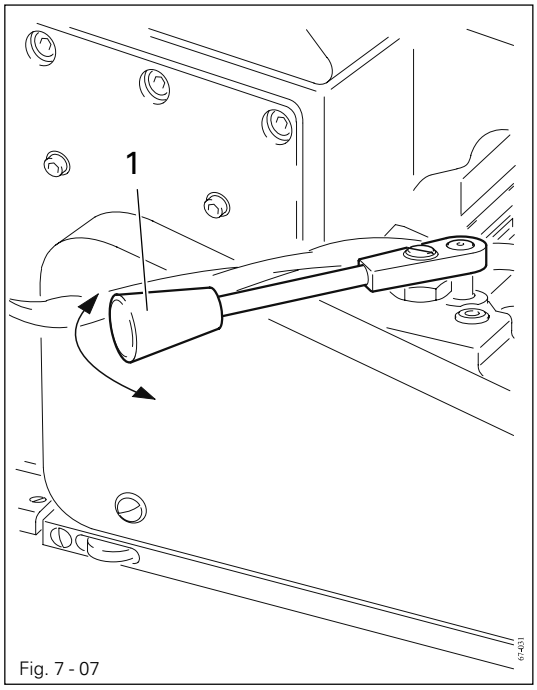

Fig. 7 - 07

- The hot wedge can be engaged and disengaged with lever **1.**



When disengaging the hot wedge, take care to see that lever **1** clicks into position.



The adjacent illustration shows the standard machine version (PFAFF 8362-004).

7.08 Lever for lowering the feed roller

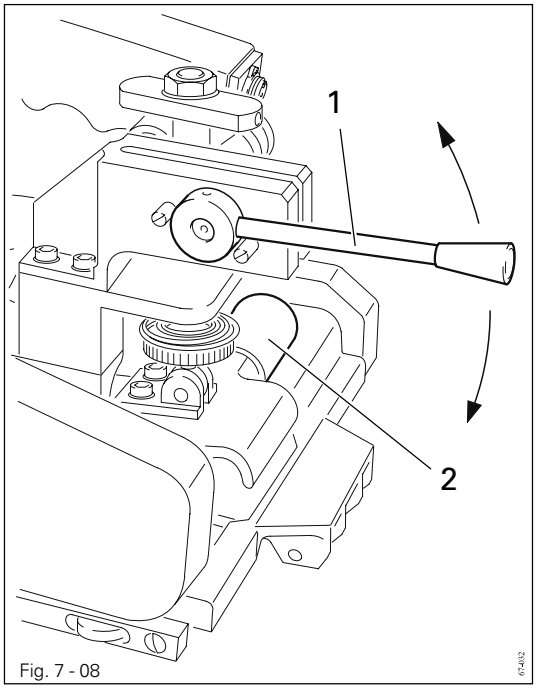

Fig. 7 - 08

- Lever **1** is used to lower and raise the top feed roller **2**.

The adjacent illustration shows the standard machine version (PFAFF 8362-004).

8 Commissioning the machine

This machine must only be commissioned by qualified specialists!
All relevant safety regulations are to be adhered to!

Before starting the machine for the first time, inspect the entire heat-sealing machine for transport damage. If damage is apparent, inform the transport company and your PFAFF agent.

8.01 Connecting the machine to the power supply

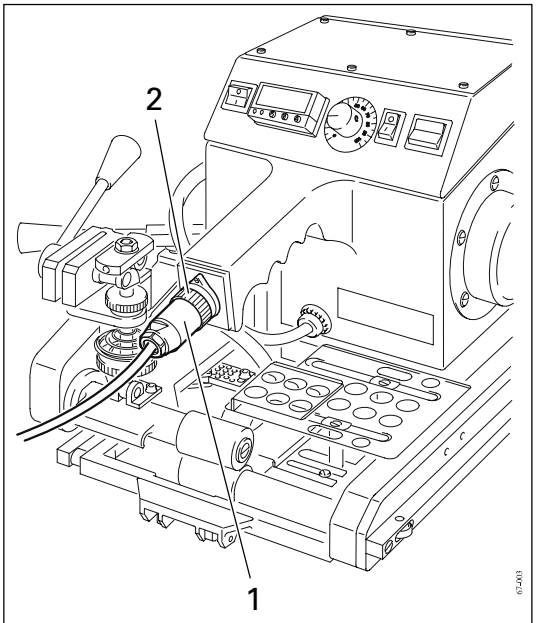

Fig. 8 - 01

- Check if the machine can be operated with available voltage (see **chapter 3 Specifications**).
- Insert plug **1** of the connection cord into the bushing of the machine and tighten coupling ring **2**.
- Plug the mains plug of the connecting cord into the main power supply.

8.02 Switching the machine on/off

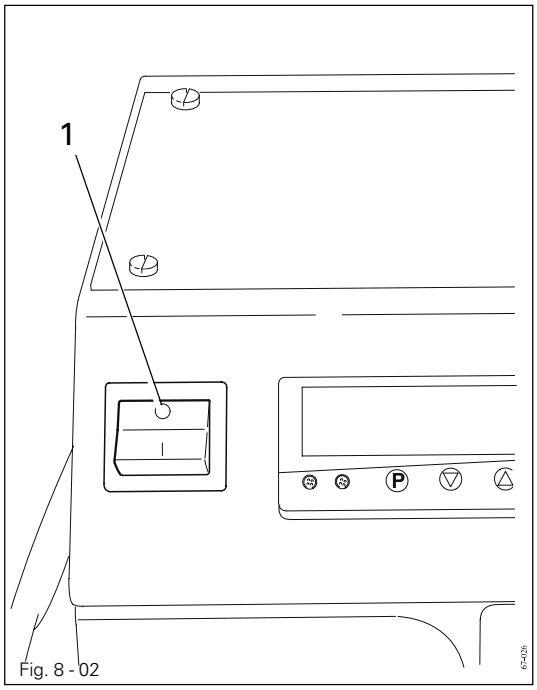

Fig. 8 - 02



To switch the machine on move switch **1** to position "**1**".

To switch the machine off move switch **1** to position "**0**".



Danger of burns from the hot wedge!
Immediately after the machine has been switched off, the hot wedge is still hot!

9 Preparation

All Preparation work must only be carried out by appropriately trained persons! The machine is to be separated from the power supply at the on/off switch or by pulling the plug out of the socket whenever carrying out preparation work!

Always allow the machine to cool down before all preparation work! Danger of burning!

9.01 Seal types

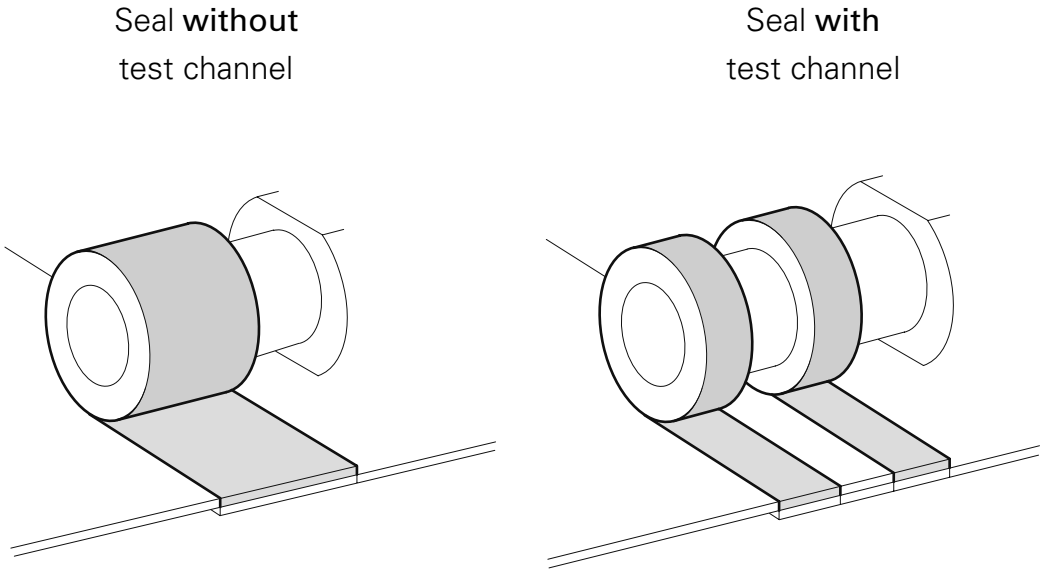

Fig. 9 - 01

On seals with a test channel, the density of the seal can be ascertained as described in **chapter 10.06.02 Testing the seal density**.

9.02 Replacing the feed rollers

The feed rollers must be changed in accordance with the material, the thickness of the foil and the type of seal desired.
The following chart serves as an orientation aid:

Foil material	Foil thickness	Lower feed-roller	Upper feed-roller
PVC (soft)	> 0.8 mm	Steel cross-knurled	Silicon
PE-LD	< 0.8 mm	Steel cross-knurled	Silicon
PE-LD	> 0.8 mm	Steel cross-knurled	Steel cross-knurled
PE-HD	< 0.8 mm	Steel cross-knurled	Silicon
PE-HD	> 0.8 mm	Steel cross-knurled	Steel cross-knurled

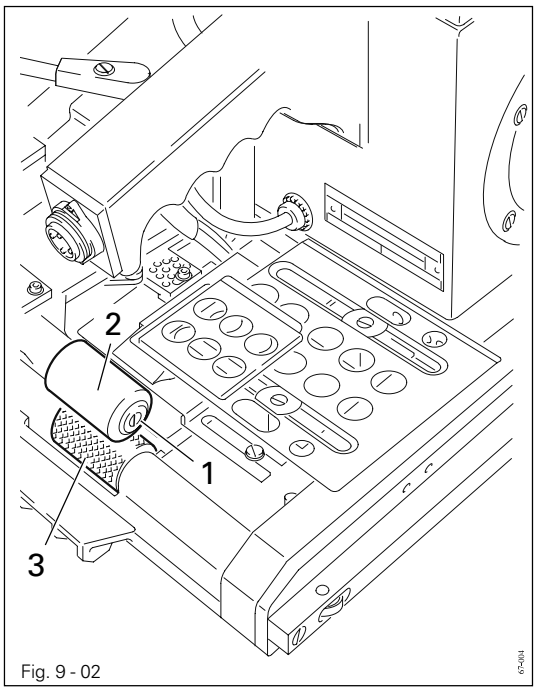

Fig. 9 - 02

If required:

- Loosen screw **1**.
- Replace the upper feed-roller **2** to suit the seal type as described in the above chart.
- Tighten screw **1**.

If required:

- Loosen the retaining screw of the lower feed-roller **3**.
- Replace lower feed-roller **3** in to suit the seal type.
- Tighten the retaining screw.

9.03 Adjusting the feed-roller clearance

The feed-roller clearance is dependent on the thickness of the material of the workpiece. The clearance is correct when one ply of the workpiece material can just be pulled out from between the feed rollers when the upper feed-roller is lowered.

9.03.01 Adjusting the feed-roller clearance on the PFAFF 8362-004

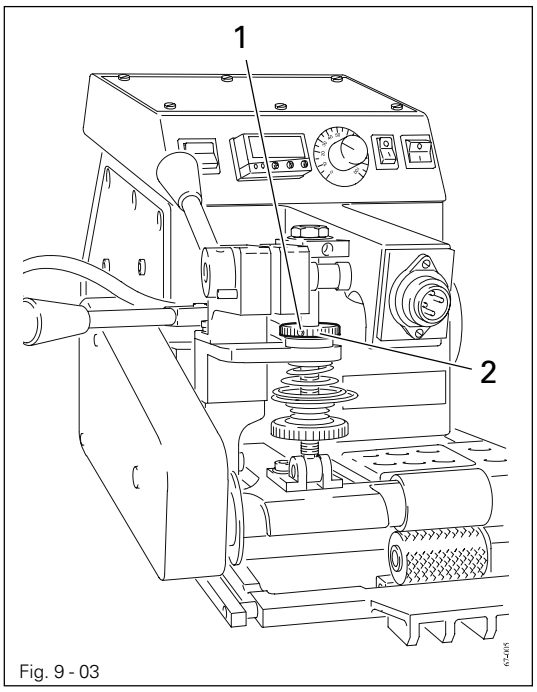

Fig. 9 - 03

Turn the machine off!
Wait until the heating wedge is cool! Danger of burning!

- Loosen threaded pin **1**.
- Adjust the feed rollers by turning the knurled disc **2**.
- Tighten threaded pin **1**.

9.03.02 Adjusting the feed-roller clearance on the PFAFF 8362-045

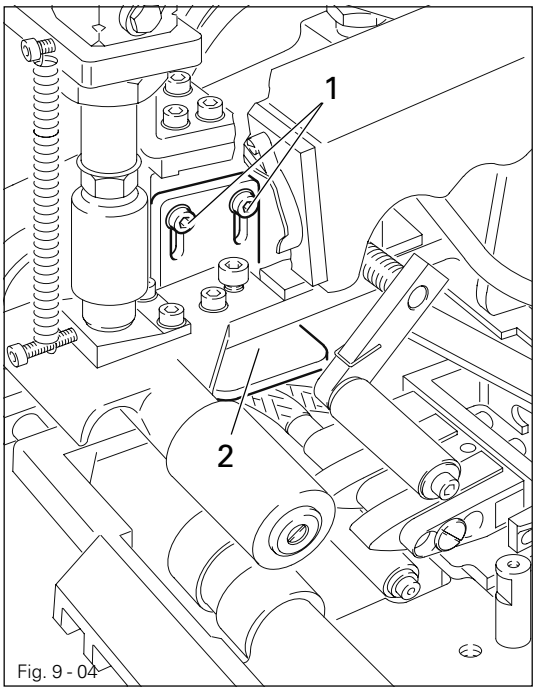

Fig. 9 - 04

Turn the machine off!
Wait until the heating wedge is cool! Danger of burning!

- Loosen screws **1**.
- Adjust the feed rollers by moving the stop bracket **2**.
- Tighten screws **1**.

9.04 Adjusting the heat-sealing pressure

The heat-sealing pressure must be set in such a way that the workpiece is reliably fed. The feed rollers may not, however, leave pressure marks in the material. Use a lower heat-sealing pressure for soft materials (e.g. PVC) than for hard materials (e.g. PE).

9.04.01 Adjusting the heat-sealing pressure on the PFAFF 8362-004

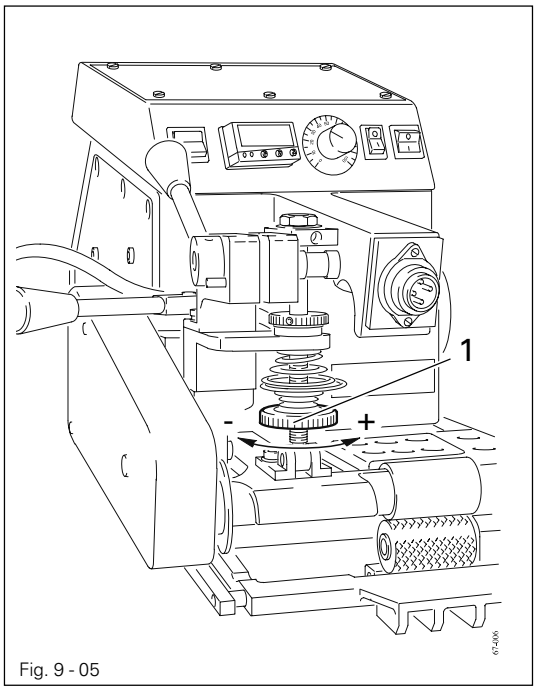

Fig. 9 - 05

Turn the machine off!
Wait until the heating wedge is cool! Danger of burning!

- Adjust the heat-sealing pressure by turning knurled disc **1**.

9.04.02 Adjusting the heat-sealing pressure on the PFAFF 8362-045

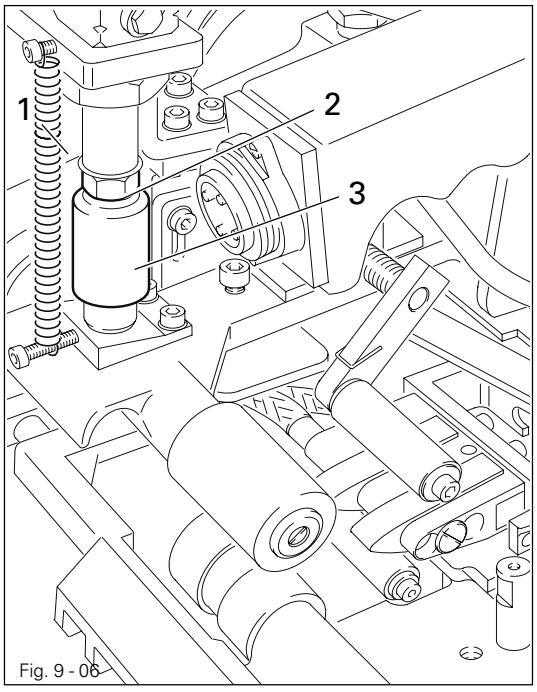

Fig. 9 - 06

Turn the machine off!
Wait until the heating wedge is cool! Danger of burning!

- Dismount spring **1**.
- Loosen nut **2**.
- Adjust the heat-sealing pressure by turning tapped bush **3**.
- Tighten nut **2**.
- Mount spring **1**.

9.05 Adjusting the clearance between the heating wedge and the feed rollers

With the heating wedge swung in and the feed roller lowered, there must be a clearance between the heating wedge and the feed rollers which corresponds to the thickness of the material.

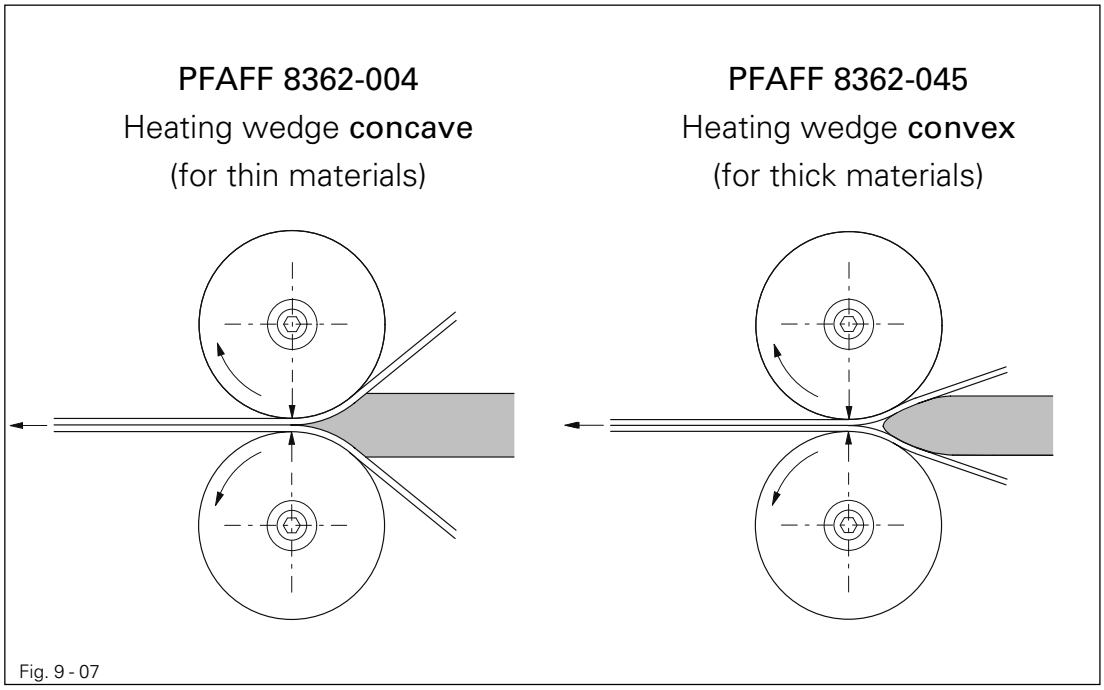

Fig. 9 - 07

9.05.01 Adjusting the heating-wedge clearance on the PFAFF 8362-004

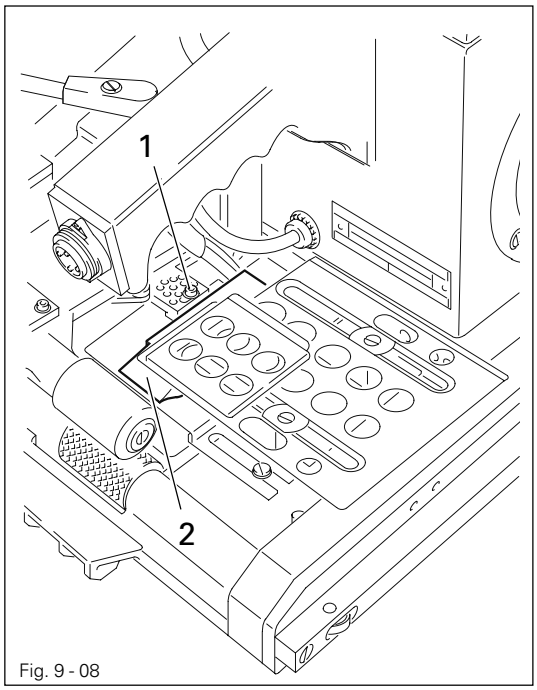

Fig. 9 - 08



Turn the machine off!
Wait until the heating wedge is cool! Danger of burning!

- Loosen screw **1**.
- Move the heating wedge **2** in accordance with the material thickness.
- Tighten screw **1**.

9.05.02 Adjusting the heating-wedge clearance on the PFAFF 8362-045

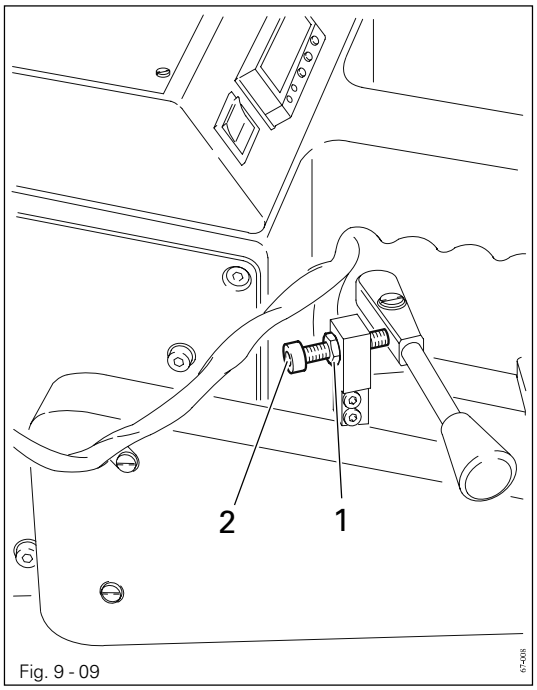

Fig. 9 - 09

- Loosen nut **1**.
- By turning stop screw **2**, adjust the heating-wedge clearance in accordance with the material thickness.
- Tighten nut **1**.

9.06 Adjusting the workpiece guides

The setting of the workpiece guides determines how much the workpieces overlap.
The width of the overlap can be the same size or larger than the seal width.

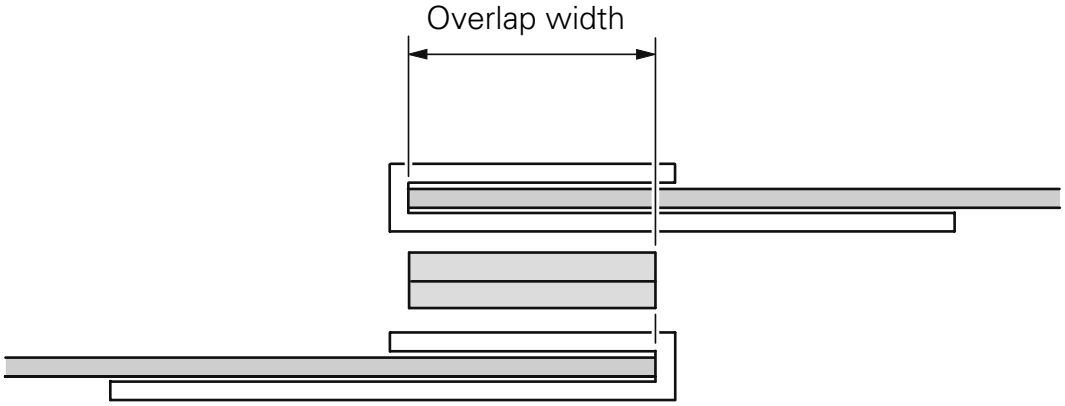

Fig. 9 - 10

9.06.01 Adjusting the upper rear workpiece guide

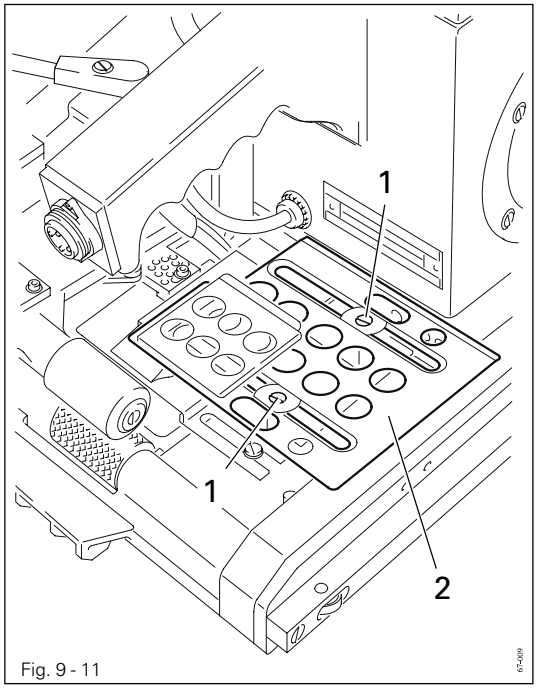

Fig. 9 - 11

Turn the machine off!
Wait until the heating wedge is cool! Danger of burning!

- Loosen screws **1**.
- Move workpiece guide **2** parallel to the direction of sealing.
- Tighten screws **1**.

9.06.02 Adjusting the lower rear workpiece guide

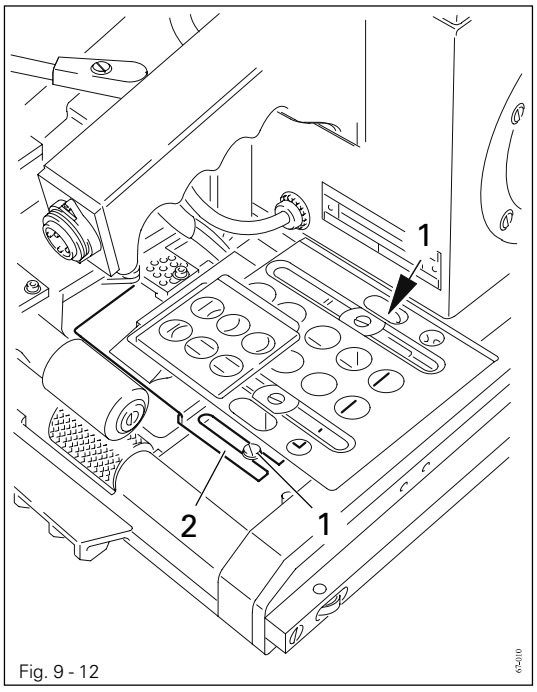

Fig. 9 - 12

Turn the machine off!
Wait until the heating wedge is cool! Danger of burning!

- Loosen screws **1** (2 screws).
- Move workpiece guide **2** parallel to the direction of sealing.
- Tighten screws **1**.

9.06.03 Adjusting the front workpiece guides

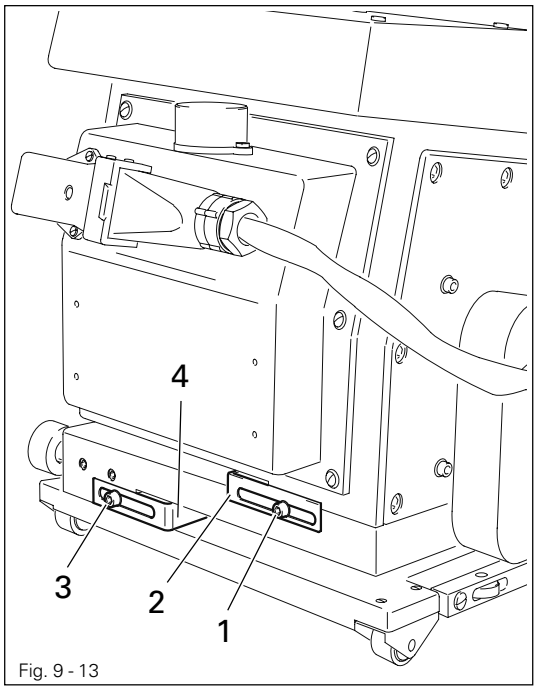

Fig. 9 - 13

Turn the machine off!

- Loosen screw **1**.
- Move workpiece guide **2** so that it is flush with the upper rear workpiece guide.
- Tighten screw **1**.
- Loosen screw **3**.
- Move guide **4** in such a way that it is flush with the lower rear workpiece guide.
- Tighten screw **3**.

9.07 Adjusting the heat-sealing temperature and speed

All machine settings are determined by the workpiece which is to be sealed. The perfect sealing temperature and speed are to be found by making a test seal.

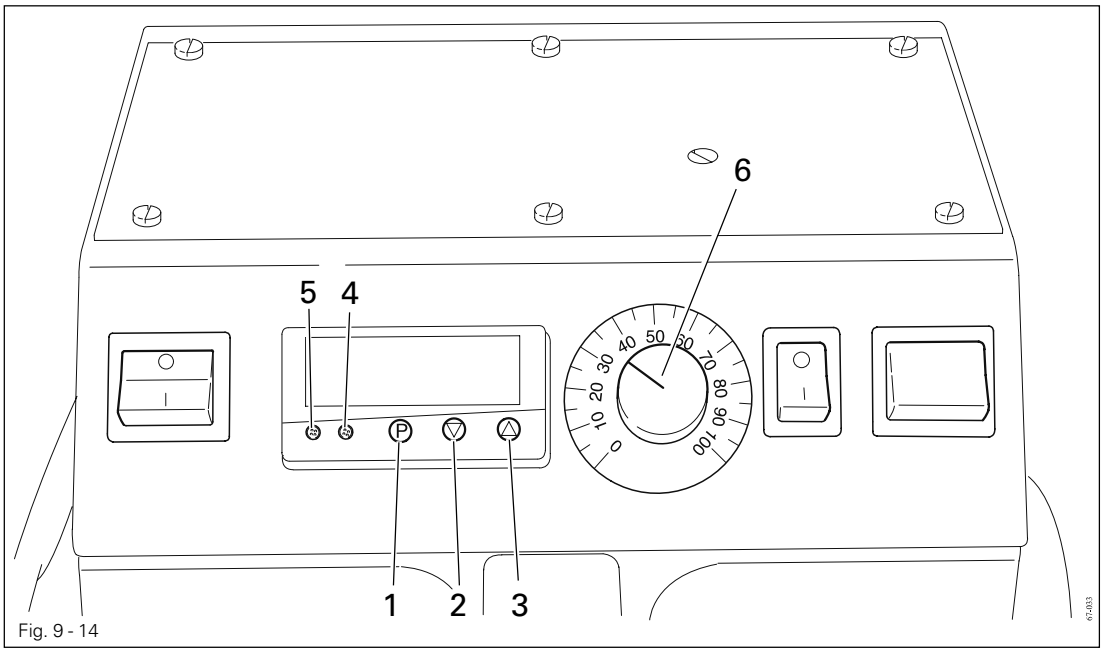

Fig. 9 - 14

- After pressing button **1** the heat-sealing temperature can be altered with keys **2** and **3**. The value set for the heat-sealing temperature appears on the display.
  Button **2**: Reduce the heat-sealing temperature
  Button **3**: Increase the heat-sealing temperature

- After the desired heat-sealing temperature has been entered, the actual temperature of the hot wedge appears on the display again.

The LED "K2" **4** lights up, when power is fed to the hot wedge. If the difference between the set heat-sealing temperature and the actual temperature of the hot wedge is too great, LED "K1" **5** lights up. If the hot wedge is engaged, a hooter sounds in addition.

- Adjust the heat-sealing speed by turning controller **6**.

10 Heat sealing

The machine must only be operated by appropriately trained personnel! The operating personnel is also responsible for ensuring that only authorized personnel are allowed into the area of potential danger around the machine!

10.01 The heat-sealing principle

The two workpieces which are to be connected are heated into a semi-liquid state in the area of the seal by being brought into contact with an electrically warmed heating wedge. The heated, semi-liquid material in the area of the seal is then pressed between the feed rollers and thus, sealed.

To achieve a perfect heat seal, certain prerequisites must be fulfilled with regard to the material and the machine settings.

The material to be processed must:

- be sealable (thermoplastic),
- have a thickness and characteristics which are suitable for processing with the machine,
- be clean in the area of the seal.

The basic prerequisites with regard to the heat-sealing machine are:

- form and position of the heating wedge
- correct working temperature of the workpiece
- selection of the correct feed rollers
- correct pressure of the feed rollers on the workpiece
- correct clearance between the feed rollers (penetration depth) and
- correct heat-sealing speed.

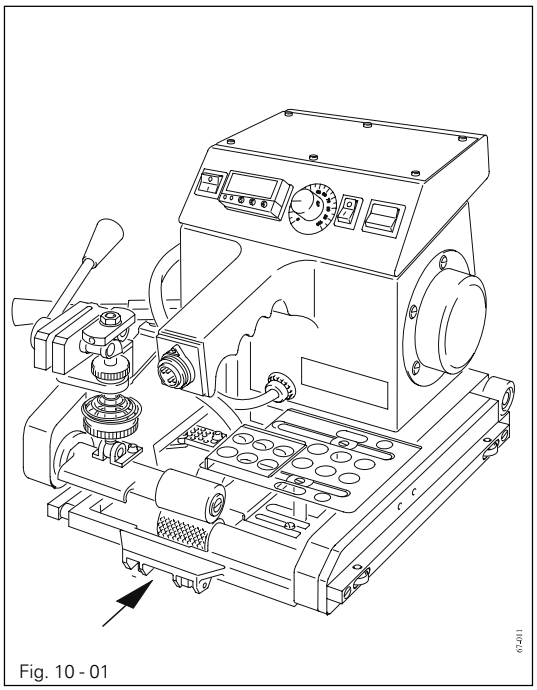

Fig. 10 - 01

All settings of the heat-sealing machine are dependent on the workpiece to be sealed. The perfect settings must be established by sealing a test seal.

When sealing, the roller on the back of the machine must be swung in (see arrow)!

10.02 Inserting the workpiece

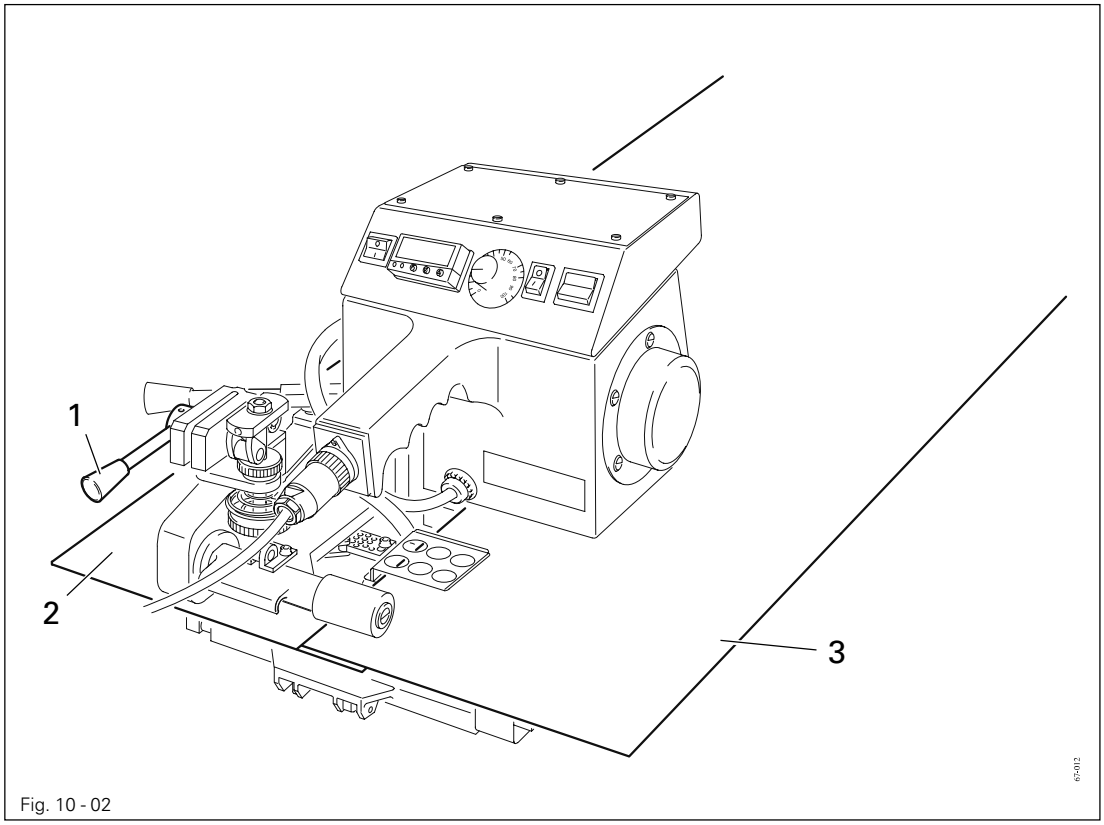

Fig. 10 - 02

- Raise top feed roller with lever **1.**
- Slide the lower workpiece **2** as far as it will go into the lower feed guide.
- Slide the upper workpiece **3** as far as it will go into the upper feed guide.
- Guide the beginning of the workpiece between the feed rollers.

10.03 Aligning the workpieces

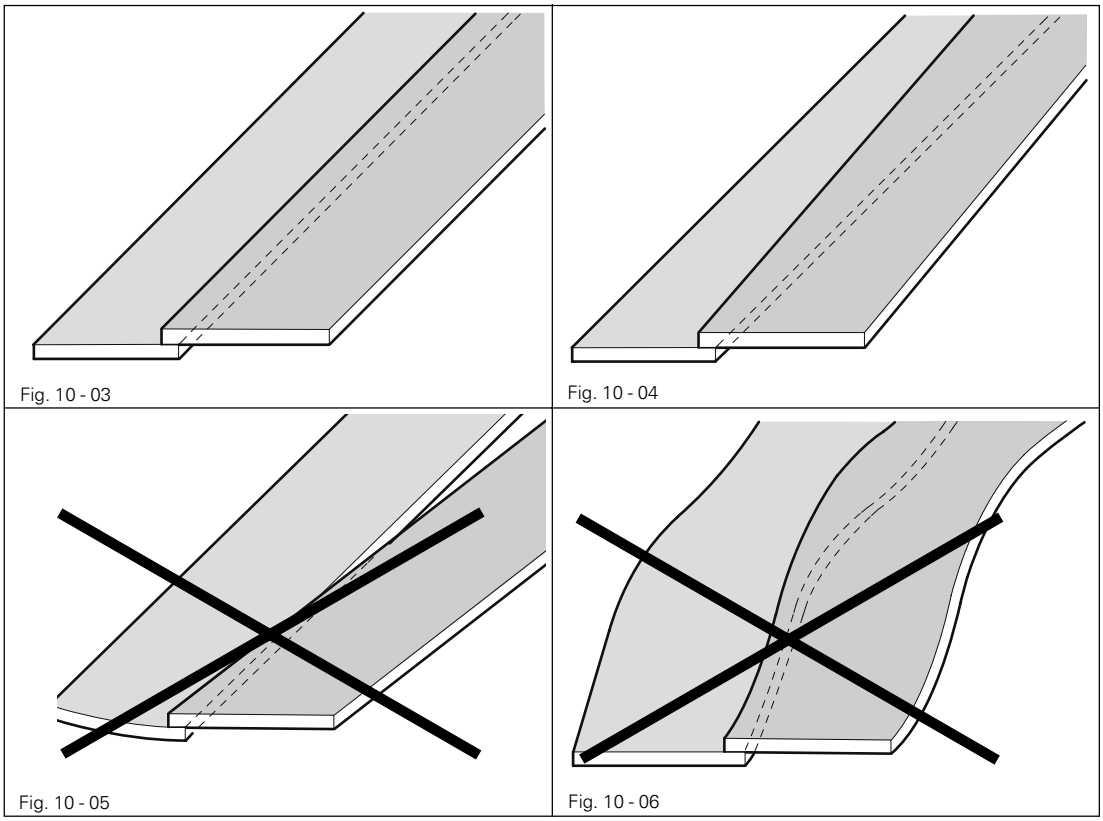

Fig. 10 - 03

Fig. 10 - 04

Fig. 10 - 05

Fig. 10 - 06

When aligning the workpieces on the sealing surface, take care to ensure that they overlap a little more than the overlap setting (**Fig. 10-03** and **Fig. 10-04**).
The position of the workpieces will then be corrected by the feed guides as the material is fed into the heat-sealing machine.

Widths of material, which are too far apart or which have too many ripples (see Fig. 10.05 and Fig. 10.06) cannot be properly joined by the workpiece guide units, so that they cannot be sealed properly.

10.04 Heat-sealing the workpieces

10.04.01 Guiding the machine manually

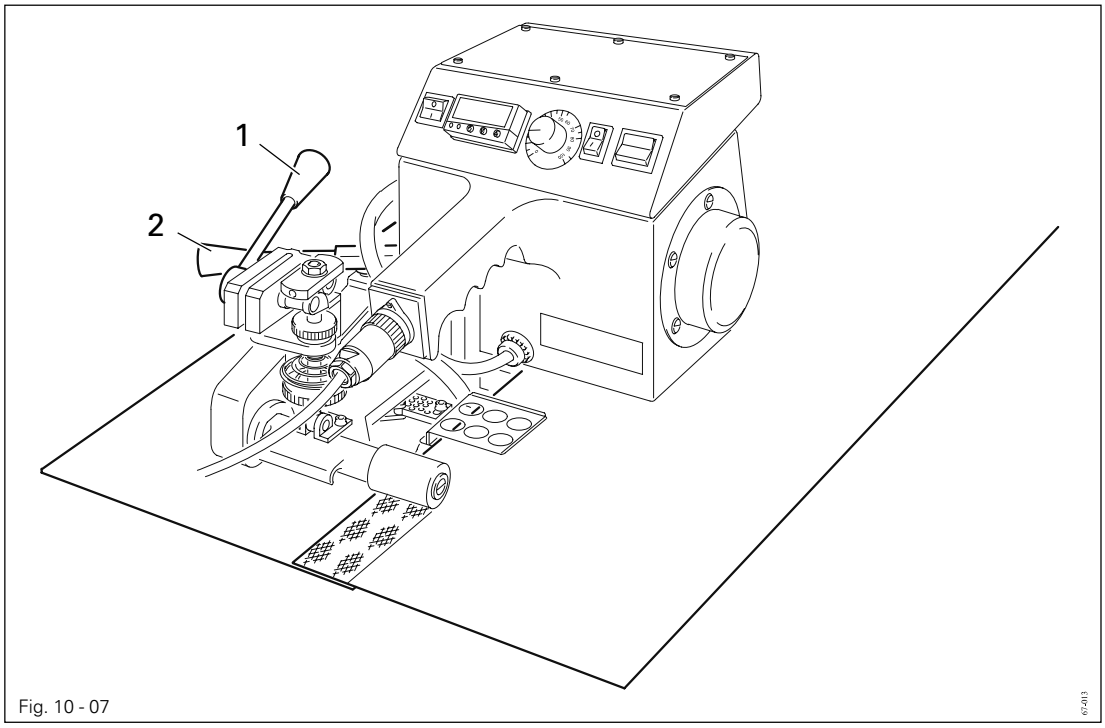

Fig. 10 - 07

- Connect the machine to the power supply (see **chapter 8.01 Connecting the machine to the power supply**).
- Set operating mode "**0**", see **Chapter 7.05 Selection switch for the operating mode**.

In operating mode "1" the feed rollers start as soon as the machine is switched on at the mains switch.

- Switch the machine on at the mains switch, see **Chapter 7.02 Mains switch**.
- Set the operating direction at forwards, see **Chapter 7.06 Selection switch for the operating direction.**
- Adjust the heat-sealing temperature and speed, see **Chapter 9.07 Adjusting the heat-sealing temperature and speed.**

To avoid damage to the material the following steps must be carried out in quick succession after the pre-selected heat-sealing temperature has been reached.

- Align and insert the material strips as described in the preceding chapters
- Lower the feed roller with lever **1**.
- Engage the hot wedge with lever **2** (the feed rollers start).

During the heat-sealing process the machine must always be operated by hand.

10.04.02 Heat-sealing with a guide

Roof battens, rectangular tubes etc. can be used to make a guide.

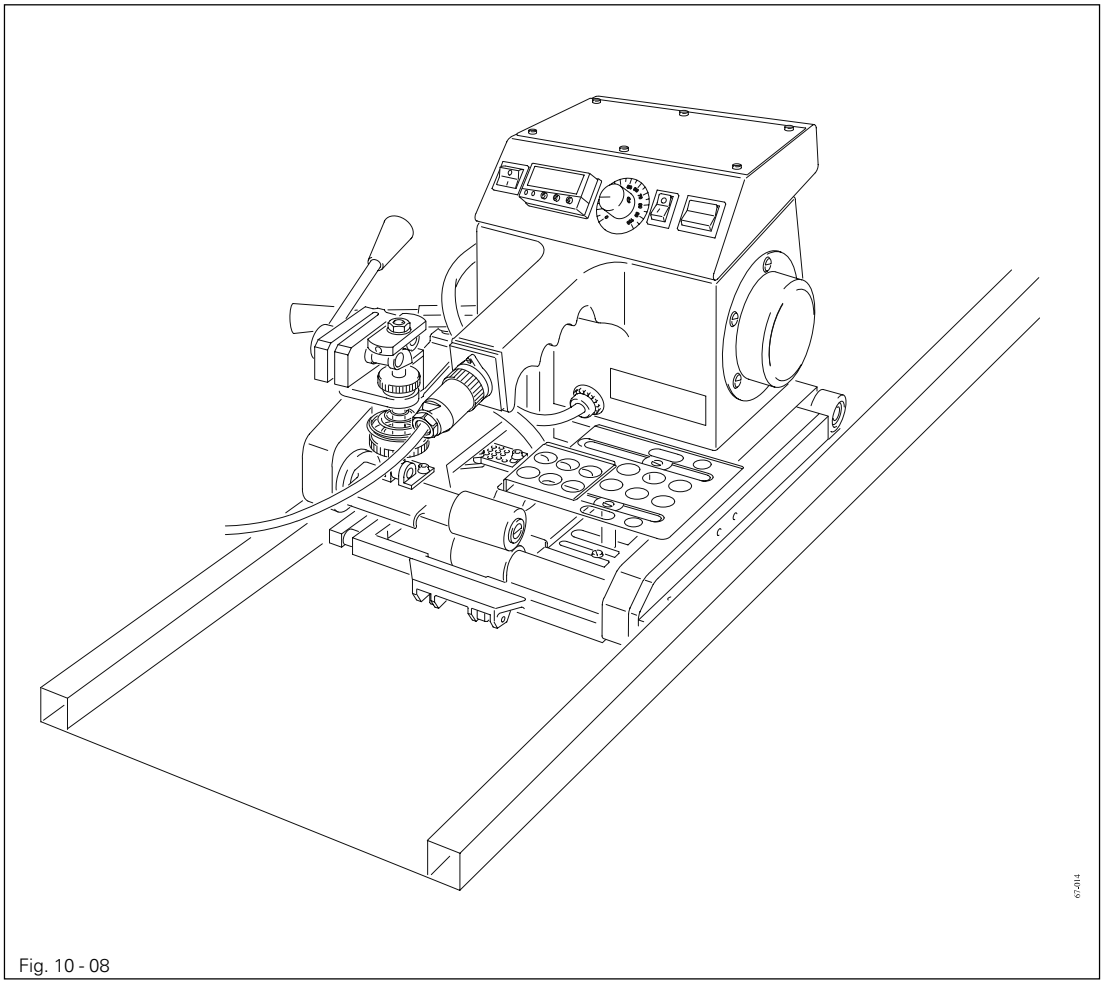

Fig. 10 - 08

10.05 Stopping the machine

- Disengage the hot wedge (the feed rollers stop), see **Chapter 7.07 Lever for engaging the hot wedge**.
- Raise the feed roller, see **Chapter 7.08 Lever for lowering the feed roller**.
- Switch off the machine at the mains switch, see **Chapter 7.02 Mains switch**.
- Pull out the mains switch and let the machine cool down.

10.06 Testing the seal

All tests are only to be carried out on cold seals.

10.06.01 Testing the seal strength

The seal strength (pull resistance) can only be established by a destructive test. This is done by way of a tearing test on the workpieces which can either be done manually or with a tension dynamometer (for finding out the seal strength more exactly).

10.06.02 Testing the tightness of the seal

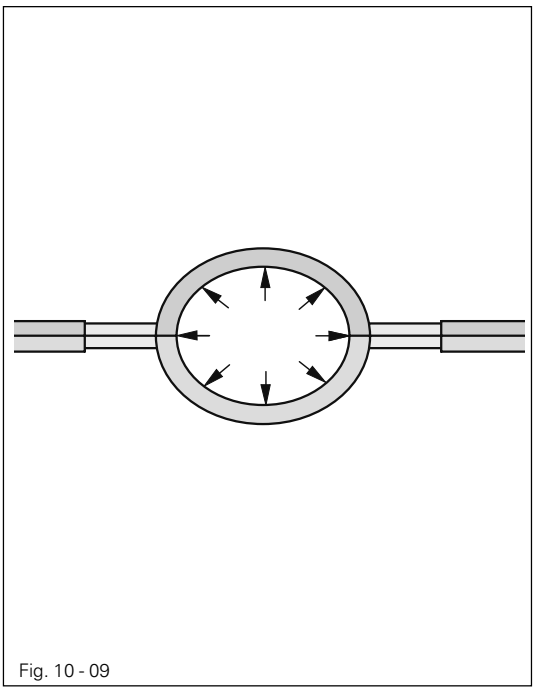

Fig. 10 - 09

The non-destructive test of seal tightness can be carried out on an overlapping seal with a test channel (see **chapter 9.01 Seal types**).

This test can be carried out on PE-HD foils with an air pressure of **2.5** to **5 bar** which is pumped into the test channel between the two seals.

The air pressure can drop up to **20%** in **10** minutes.

10.07 Malfunctions during the heat-sealing operation cycle

Malfunction	Cause/correction
Display "1999"	Broken sensor or line, change the hot wedge, see **Chapter 11.03 Changing and grinding the hot wedge.**
LED "K1" lights up Hooter signal	Difference between the pre-selected heat-sealing temperature and the actual temperature of the hot wedge is too great, wait until the hot wedge has heated up or cooled down sufficiently.

11 Care and maintenance

Check cable and plug connections	Daily before use
Clean the heating wedge	Daily before use
Replace the heating wedge	As required
Replace the feed rollers	As required
Lubricate drive chains	As required
Tension the drive chains	As required

11.01 Checking the cable and plug connections



Switch the machine off!
Remove the mains lead! Danger from electric voltage!

- Check cable and plug connections for damage every day before use.



Never operate a defective machine! Have the machine repaired by qualified specialist personnel!

11.02 Cleaning the heating wedge

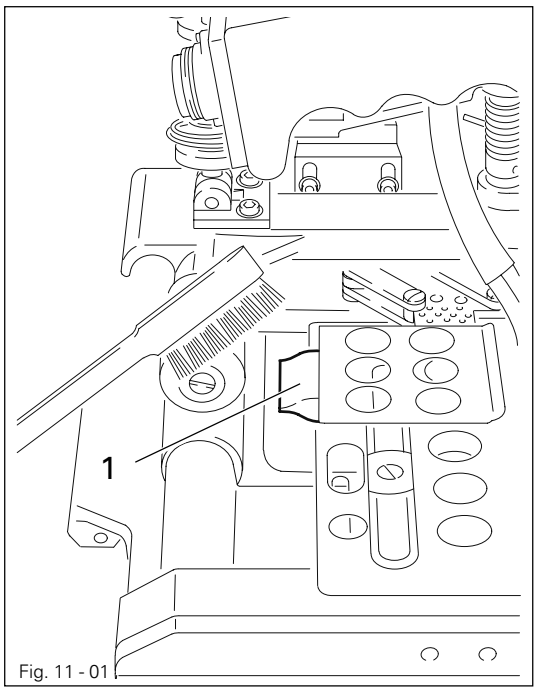

Fig. 11 - 01



Ensure that the machine is turned off and the heating wedge is cool!
Danger of burning!

- Before operating the machine, always remove the burn residue on the top and bottom of the heating wedge **1** with a soft wire brush.

11.03 Changing and grinding in the hot wedge

If the heating cartridges are defective or the hot wedge is very worn down and an optimum sealing result can no longer be achieved by adjustment, the hot wedge must be changed and, on the **PFAFF 8362-004**, ground in.

11.03.01 Changing the hot wedge on the PFAFF 8362-004

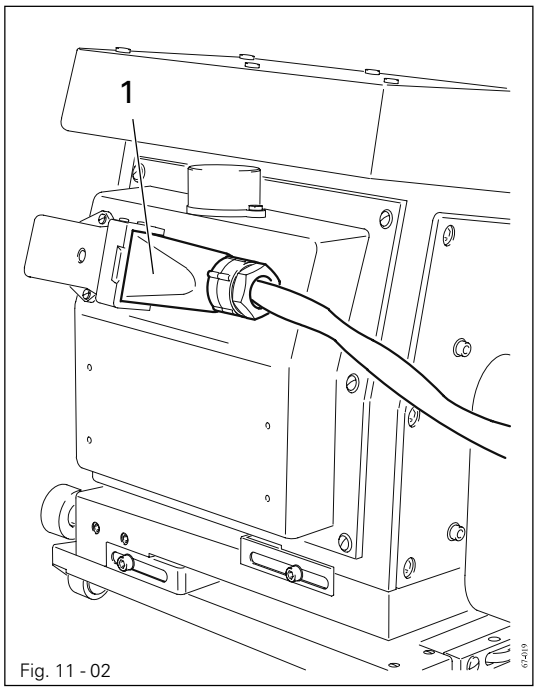

Fig. 11 - 02

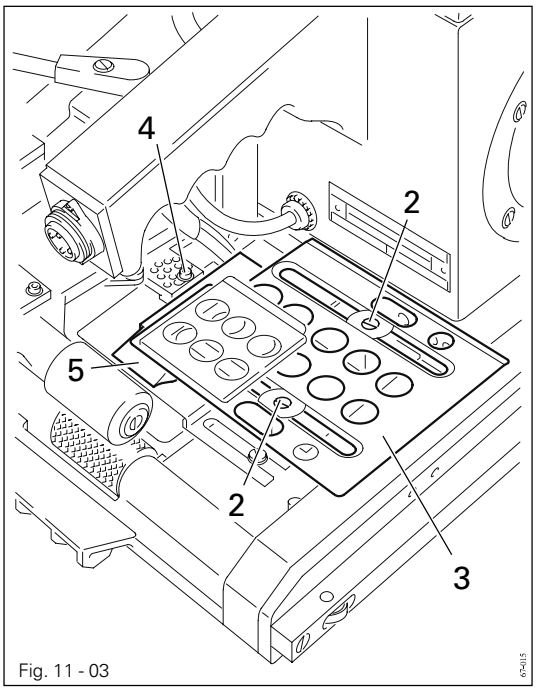

Fig. 11 - 03



Switch off the machine!
Let the hot wedge cool down! Danger of burns!

- Pull out switch **1** of the hot wedge.
- Unscrew screws **2**.
- Remove workpiece guide unit **3**.
- Unscrew screw **4**.
- Remove hot wedge **5**.
- To fit the new hot wedge **5** carry out the above work steps in reverse order.

11.03.02 Grinding in the hot wedge (only on the PFAFF 8362-004)

The tip of the hot wedge should match the shape of the feed hopper between the top and bottom feed roller.
During the heat-sealing operation the entire surface of the wedge tip must touch the workpiece.

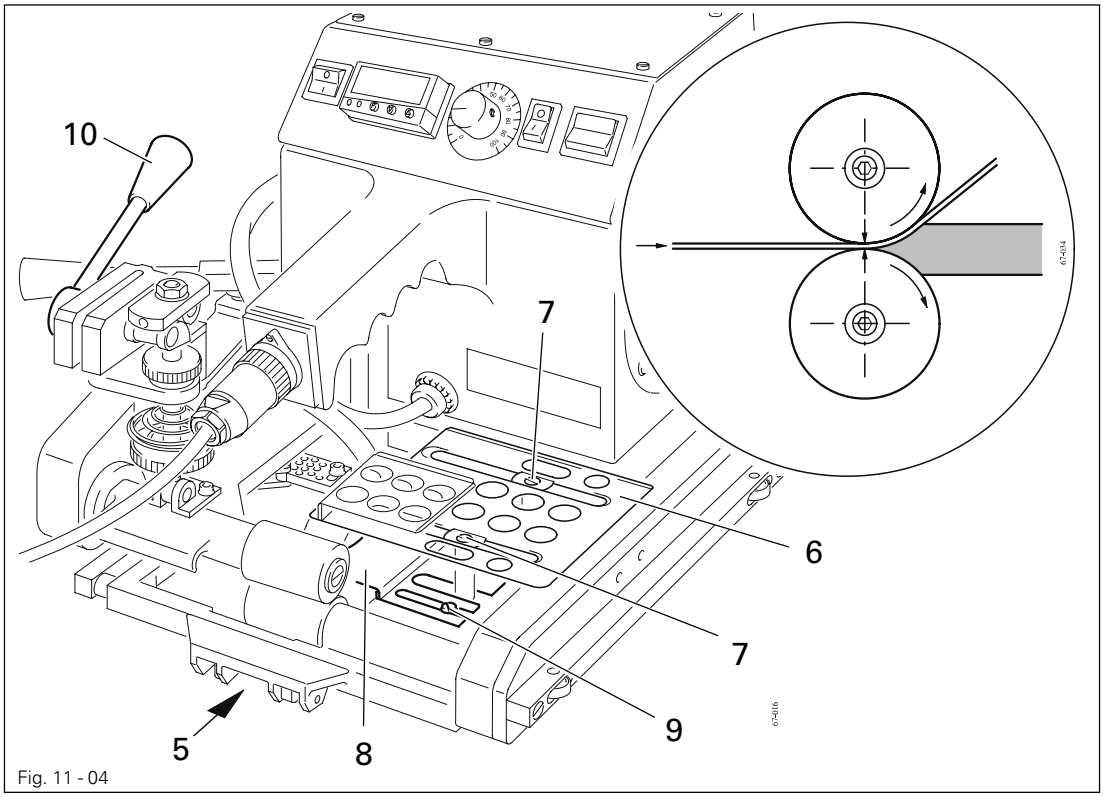

Fig. 11 - 04

- Fold down driving roller **5**.
- Adjust the heat-sealing temperature to "0" and the heat-sealing speed to "10", see **Chapter 9.07 Adjusting the heat-sealing temperature and speed.**
- Set the operating mode at "**0**", see **Chapter 7.05 Selection switch for the operating mode.**
- Unscrew the top workpiece guide unit **6** (screws **7**) and the bottom workpiece guide unit **8** (screws **9**).
- Fit the smooth feed rollers (steel).
- Plug the machine into the mains and switch on the mains switch.
- Set the operating direction at "reverse", see **Chapter 7.06 Selection switch for the operating direction.**
- Place the hot wedge directly on the rollers, see **Chapter 9.05 Clearance of the hot wedge ..**
- Insert emery belt (grain size 100) with the rough side facing the hot wedge (top side).
- Lower the top feed roller with lever **10**.
- Engage the hot wedge and let the emery belt run through.
- Repeat the procedure with the emery band facing the bottom side of the hot wedge.
- Grind the top and bottom side of the hot wedge alternately, until the entire surface of the hot wedge is touching the rollers.
- Re-adjust the hot wedge to the thickness of the workpiece, see **Chapter 9.05 Clearance of the hot wedge ..**
- Refit the workpiece guide units.

11.03.03 Replacing the heating wedge on the PFAFF 8362-045

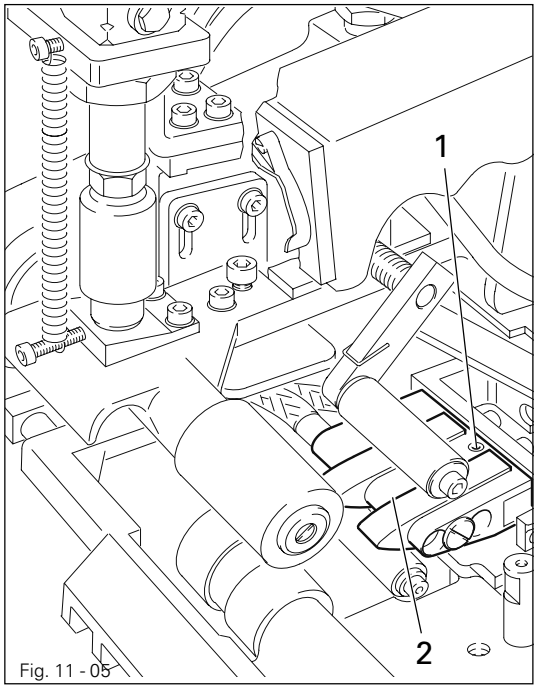

Fig. 11 - 05



Switch off the machine!
Allow heating wedge to cool!
Danger of burning!

- Knock pin **1** downwards out of its housing (dia. 2 mm).
- Pull out the plug of the heating wedge **2** on the front of the machine.
- Remove the cord of the heating wedge **2** from the chain cover (remove the plate in the chain cover).
- Pull heating wedge **2** sideways out of its mounting.
- To mount the new heating-wedge, carry out the above steps in reverse order.

11.04 Replacing the fuse

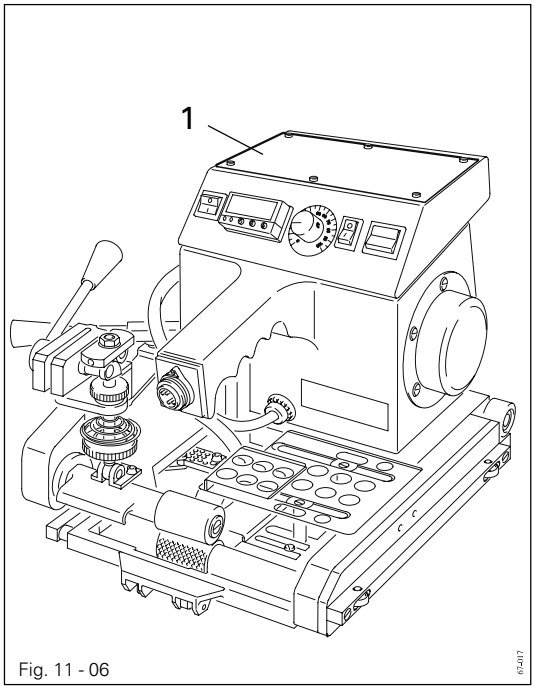

Fig. 11 - 06

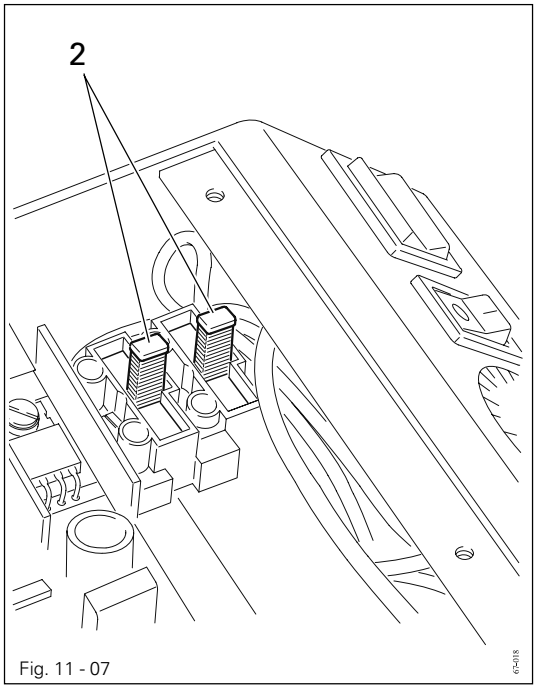

Fig. 11 - 07

The fuse protects the machine from serious damage in cases of overload or short circuit.

Switch off the machine!
Remove the mains lead! Danger from electric voltage!

- Remove cover **1**.
- Pull fuse holder **2** out of its mounting.
- Replace the defective fuse.
- Place fuse holder **2** into the mounting.
- Screw on cover **1**.

Ensure that the reason for the disturbance has been removed before turning the machine back on!

11.05 Lubricating the drive chains

How often the chains have to be oiled depends on the working conditions (moisture, amount of dirt etc.).

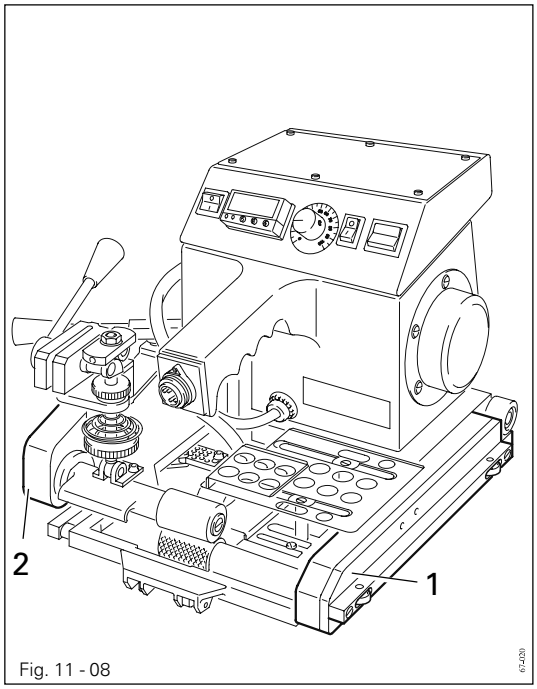

Fig. 11 - 08

Switch off the machine!

- Remove covers **1** and **2**.
- Lubricate both sides of the drive chains.
- Screw covers **1** and **2** back on.

Only use oil with viscosity class SAE 40 and a density of 1.06 g/cm³ at 20°C (in accordance with DIN 8195).

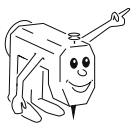

We recommend PFAFF chain oil Part no. 280-1-120 106.

11.06 Tensioning the drive chain of the lower feed-roller

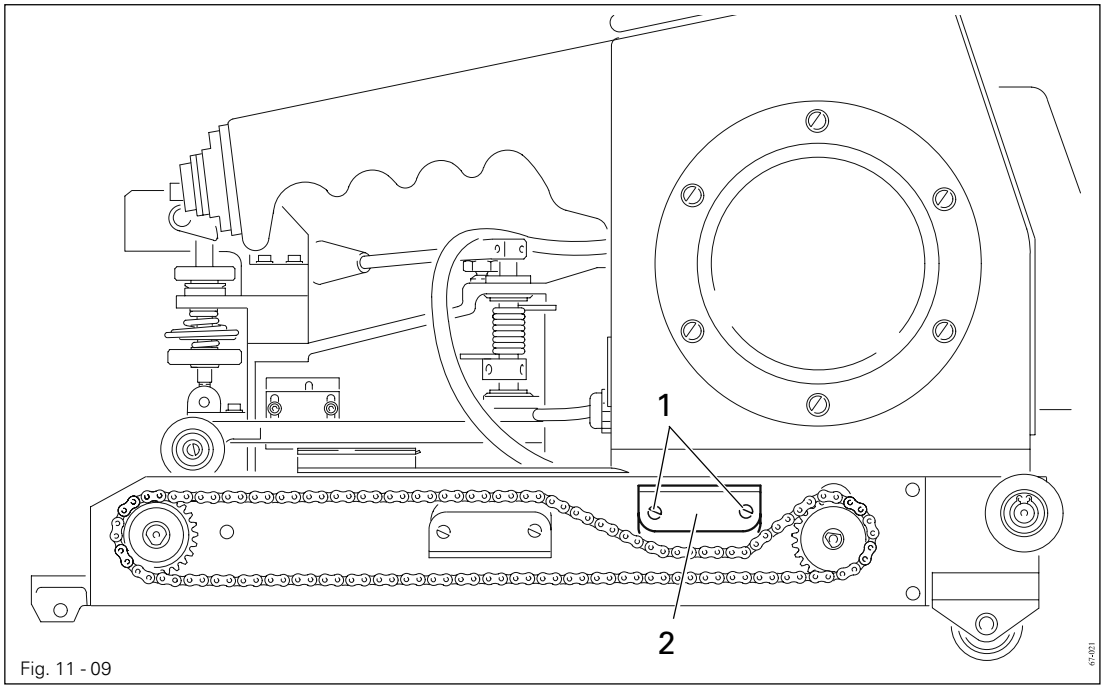

Fig. 11 - 09

- Remove the chain cover.
- Loosen screws **1** and move chain guide **2** in such a way that the drive chain can be pushed down about **5 mm**.
- Screw the chain cover back on.

11.07 Tensioning the drive chain of the upper feed-roller

The chain tensioner of this drive chain is maintenance free.

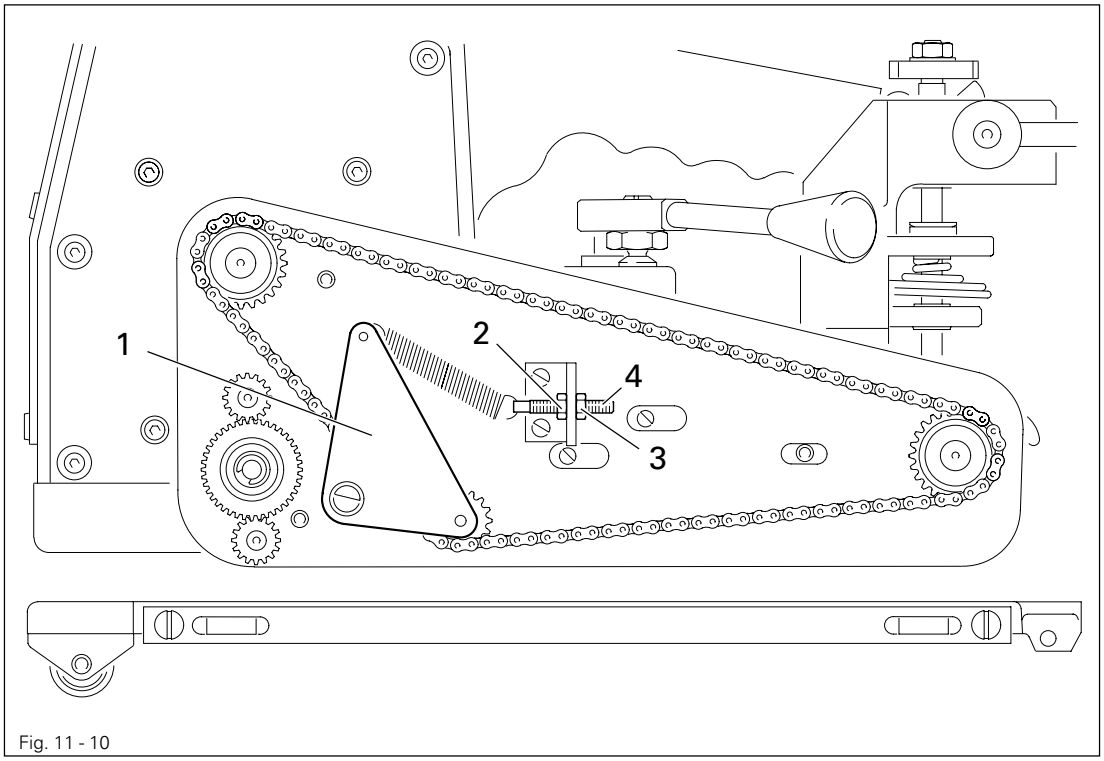

Fig. 11 - 10

- Should the slack of the chain become too large, the spring pre-tension of the chain tensioner 1 can be increased.

To do so:

- Remove the chain cover.
- Loosen nuts 2 and 3.
- Enlarge the spring tension by turning screw 4.
- Screw the chain guard back on.

Reference list for the circuit diagram

A1	Controller for heat-sealing temperature
A2	Power unit
A3	Motor board drive unit
M1	Drive unit
H1	Hooter
B1	Sensor (heating cartridge 1)
B2	Sensor (heating cartridge 2)
E1	Heating cartridge 1
E2	Heating cartridge 2
R1	Potentiometer (heat-sealing speed controller)
K1	Solid state relay
F1	Fuse
F2	Fuse
S1	Switch - mains
S2	Switch – operating mode drive unit
S3	Switch – hot wedge engaged
S4	Switch – operating direction drive unit
X1	Plug connection - mains
X2	Plug connection – heating cartridges and sensors
X10	Plug connection – heating cartridges
X11	Plug connection - sensors
X12	Plug connection - hooter
95-211 899-91	Adaptor 115 volt

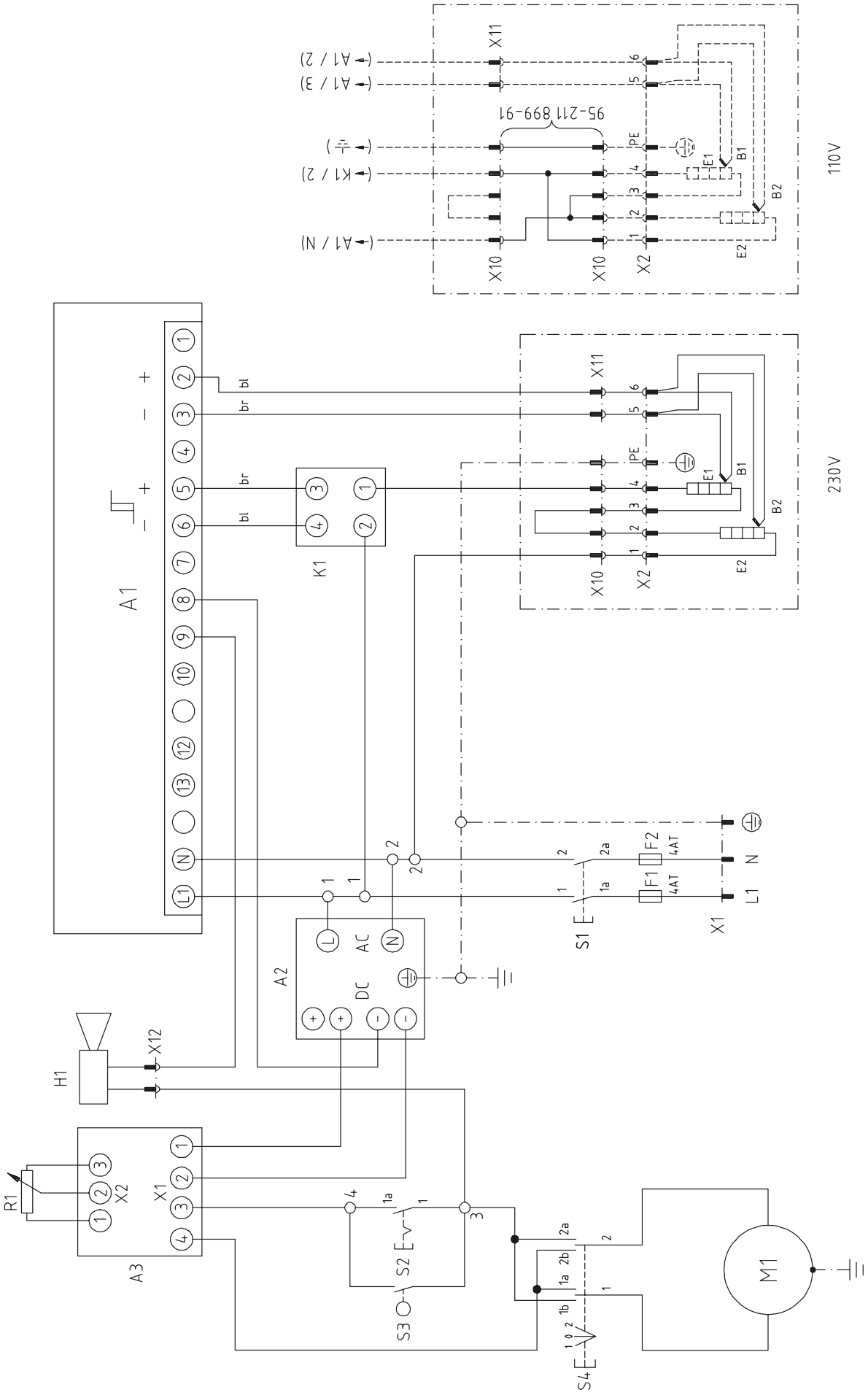
110V
230V
95-211 899-91
X11
X10
X2
PE
E1
B1
B2
E2
A1
K1
A2
AC
DC
H1
X12
R1
X1
X2
A3
S1
S2
S3
S4
F1
F2
4AT
L1
N
M1

PFAFF® Industrial



Europäische Union
Wachstum durch Innovation – EFRE



PFAFF Industriesysteme
und Maschinen AG

Hans-Geiger-Str. 12 - IG Nord
D-67661 Kaiserslautern

Phone: +49-6301 3205 - 0
Fax: +49-6301 3205 1386
E-mail: info@pfaff-industrial.com

Hotlines:

Technical service:	+49-175/2243-101
Application consultance:	+49-175/2243-102
Spare-parts hotline:	+49-175/2243-103

Printed in Germany

© PFAFF Industriesysteme und Maschinen AG 2009, PFAFF is the exclusive trademark of VSM Group AB.PFAFF Industriesysteme und Maschinen AG is an authorized licensee of the PFAFF trademark.