PFAFF® Industrial

918
938 U

ADJUSTMENT MANUAL

938
938 U

This Adjustment Manual is valid for machines from the following serial numbers onwards:
2 671 899 →

296-12-18 998/002
Justieranleitung engl. 06.12

The reprinting, copying or translation of PFAFF Service Manuals, whether in whole or in part, is only permitted with our previous authorization and with written reference to the source.

PFAFF Industriesysteme
und Maschinen AG

Hans-Geiger-Str. 12 - IG Nord
D-67661 Kaiserslautern

Contents ..... Page

1	**Adjustment**	**5**
1.01	Tools, gauges and other accessories for adjusting	5
1.02	Abbreviations	5
1.03	Explanation of the symbols	5
1.04	Check and adjustment aid	6
1.05	Adjusting the basic machine	7
1.05.01	Balancing weight	7
1.05.02	Centering the needle in the needle hole (in sewing direction)	8
1.05.03	Parallel guiding of the needle bar	9
1.05.04	Locking lever	10
1.05.05	Zero stitch and zigzag stitch scale	11
1.05.06	Centering the needle in the needle hole (crosswise to sewing direction)	12
1.05.07	Zigzag stitch width	13
1.05.08	Zigzag stitch movement (only on the 918 and 938)	14
1.05.09	Needle penetration symmetry - left, centre and right (only on the 918 and 938)	15
1.05.10	Multi-stitch movement (only on the 918U and 938U)	16
1.05.11	Zigzag movement (only on the 918U and 938U)	17
1.05.12	Target positioning sensor (only on the 918U and 938U)	18
1.05.13	Needle position adjustment lever	19
1.05.14	Zero position of the bottom feed dog (with closed gear box)	20
1.05.15	Zeroing the bottom feed (with open gearbox)	21
1.05.16	Feeding motion of the bottom feed dog	22
1.05.17	Lifting motion of the bottom feed dog	23
1.05.18	Drive belt in the gearbox housing	24
1.05.19	Hook bearing bracket	25
1.05.20	Hook lubrication	26
1.05.21	Pre-adjusting the needle height	27
1.05.22	Needle rise, hook-to-needle clearance and bobbin case positioning-finger	28
1.05.23	Final adjustment of the needle height	29
1.05.24	Bobbin case opener position	30
1.05.25	Bobbin case opener motion	31
1.05.26	Bottom feed dog height	32
1.05.27	Presser foot to needle plate clearance	33
1.05.28	Presser foot pressure	34
1.05.29	Needle thread tension release (on machines without -900/24)	35
1.05.30	Thread diverter pin	36
1.05.31	Limiting the knee lever stroke	37
1.05.32	Knee lever play	38
1.05.33	Bobbin winder	39

Contents ..... Page

1.06	Adjusting the underedge trimmer -771//05	40
1.06.01	Resting position of the knife	40
1.06.02	Knife height	41
1.06.03	Positioning of the knife	42
1.06.04	Knife drive switch	43
1.06.05	Workpiece guard	44
1.07	Adjusting the thread trimmer -900/24	45
1.07.01	Axial position of the control cam	45
1.07.02	Preliminary adjustment of the control cam	46
1.07.03	Position of the thread catcher and cutting test	47
1.07.04	Readjustment of the control cam	48
1.07.05	Needle thread tension release	49
2	Circuit diagrams	50

1 Adjustment



On the PFAFF 918 and 938 do not use a screw clamp on the needle bar! The special coating of the needle bar could be damaged.



Please observe all notes from Chapter 1 Safety of the instruction manual! In particular care must be taken to see that all protective devices are refitted properly after adjustment, see Chapter 1.06 Danger warnings of the instruction manual!
If not otherwise stated, the machine must be disconnected from the electrical power supply.
Danger of injury due to unintentional starting of the machine!

Notes on adjustment

All following adjustments are based on a fully assembled machine and may only be carried out by expert staff trained for this purpose. Machine covers, which have to be removed and replaced to carry out checks and adjustments, are not mentioned in the text.
The order of the following chapters corresponds to the most logical work sequence for machines which have to be completely adjusted. If only specific individual work steps are carried out, both the preceding and following chapters must be observed.
Screws, nuts indicated in brackets ( ) are fastenings for machine parts, which must be loosened before adjustment and tightened again afterwards.

1.01 Tools, gauges and other accessories for adjusting

- 1 set of screwdrivers with blade widths from 2 to 10 mm
- 1 set of wrenches with jaw widths from 7 to 14 mm
- 1 set of Allan keys from 1.5 to 6 mm
- 1 metal rule, (Part No. 08-880 218-00)
- Feed dog adjustment gauge, part no. 91-119 995-05
- 1 adjustment pin (5 mm dia.), Part No.. 13-030 341-05
- Hook bearing adjustment gauge, part no. 91-119 996-05

1.02 Abbreviations

TDC = top dead center
BDC = bottom dead center

1.03 Explanation of the symbols

In this adjustment manual, symbols emphasize operations to be carried out or important information. The symbols used have the following meaning:



Note, information

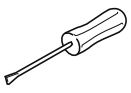

Service, repair, adjustment, maintenance

(work to be carried out by qualified staff only)

1.04 Check and adjustment aid

By blocking with holes **1** - **5** the required needle bar positions can be fixed exactly.

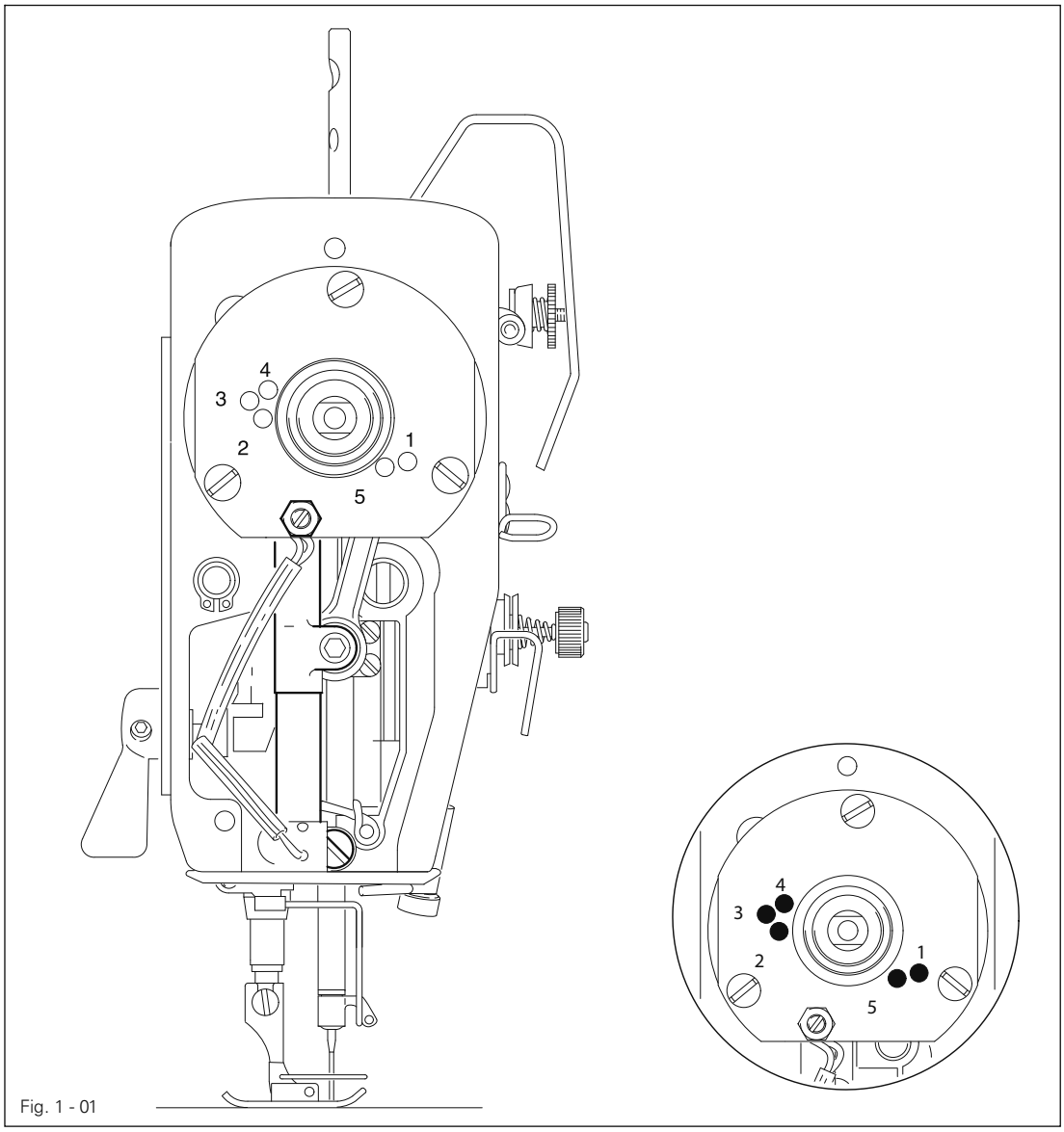

Fig. 1 - 01

- Turn the balance wheel until the needle bar has approximately reached the required position.
- Place the **5 mm** blocking pin in the appropriate hole and put pressure on it.
- Turn the balance wheel forwards and backwards a little until the blocking pin moves into the slot in the crank behind the bearing plate, thus blocking the machine.

Hole 1 = **2.0 mm** after the bottom dead center of the needle bar (2.0 past tdc)
Hole 2 = Top dead center of the needle bar (tdc)
Hole 3 = **0.25 mm** after the top dead center of the needle bar (0.25 past bdc)
Hole 4 = **1.0 mm** after the top dead center of the needle bar (1.0 **mm** past tdc)
Hole 5 = **4 mm** after the bottom dead center of the needle bar (4.0 past bdc)

1.05 Adjusting the basic machine

1.05.01 Balancing weight

Requirement
With the needle bar at bdc the largest eccentricity of the balancing weight **1** must be pointing upwards.

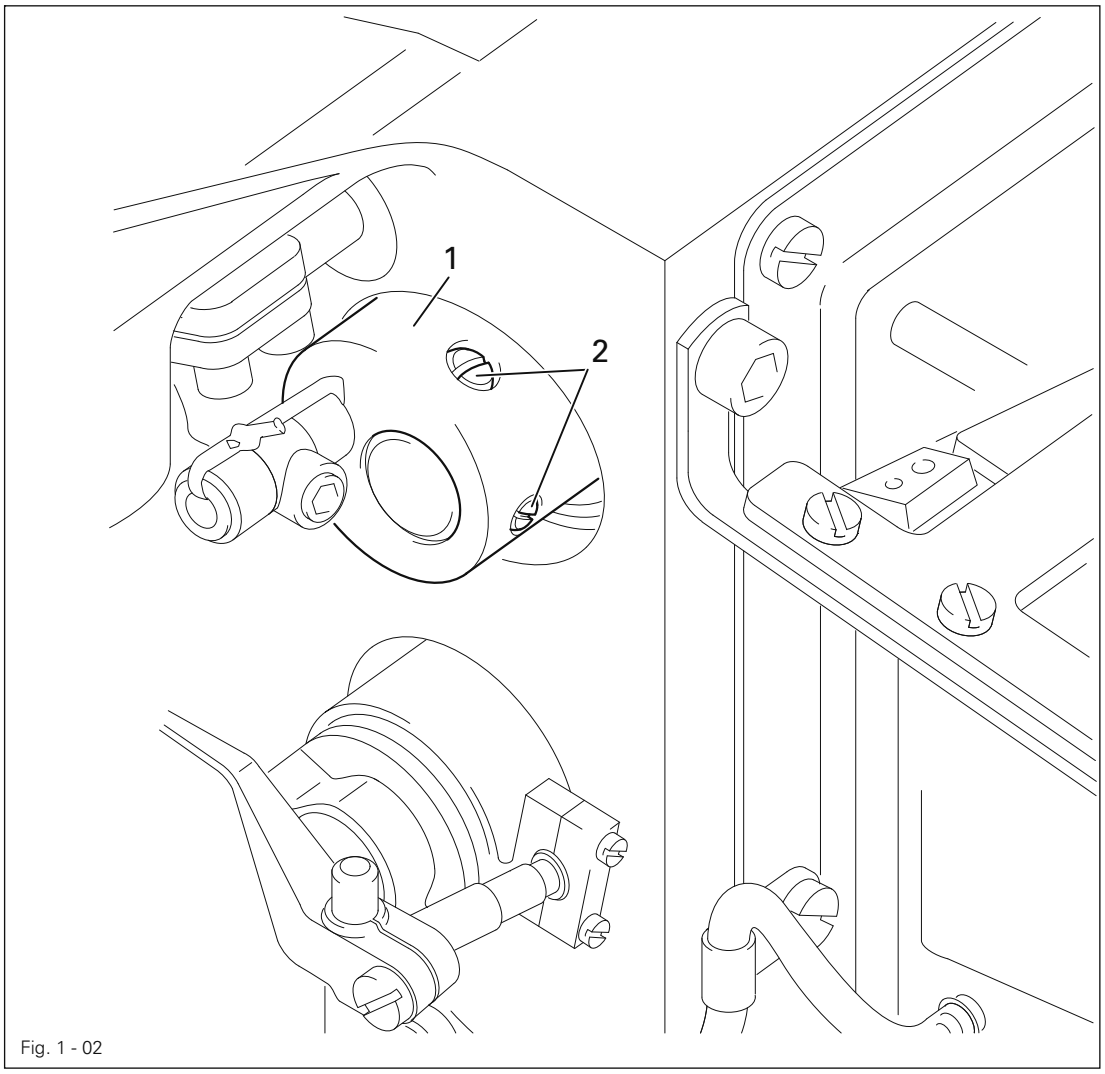

Fig. 1 - 02

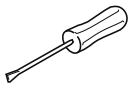

- Bring the needle bar to b.d.c.
- Adjust the balance weight **1** (screw **2**) in accordance with the **requirement**.

1.05.02 Centering the needle in the needle hole (in sewing direction)

Requirement
With the zigzag setting at "**0**" and the needle position set at "**middle**" the needle must enter the center of the needle hole as viewed in the direction of sewing.

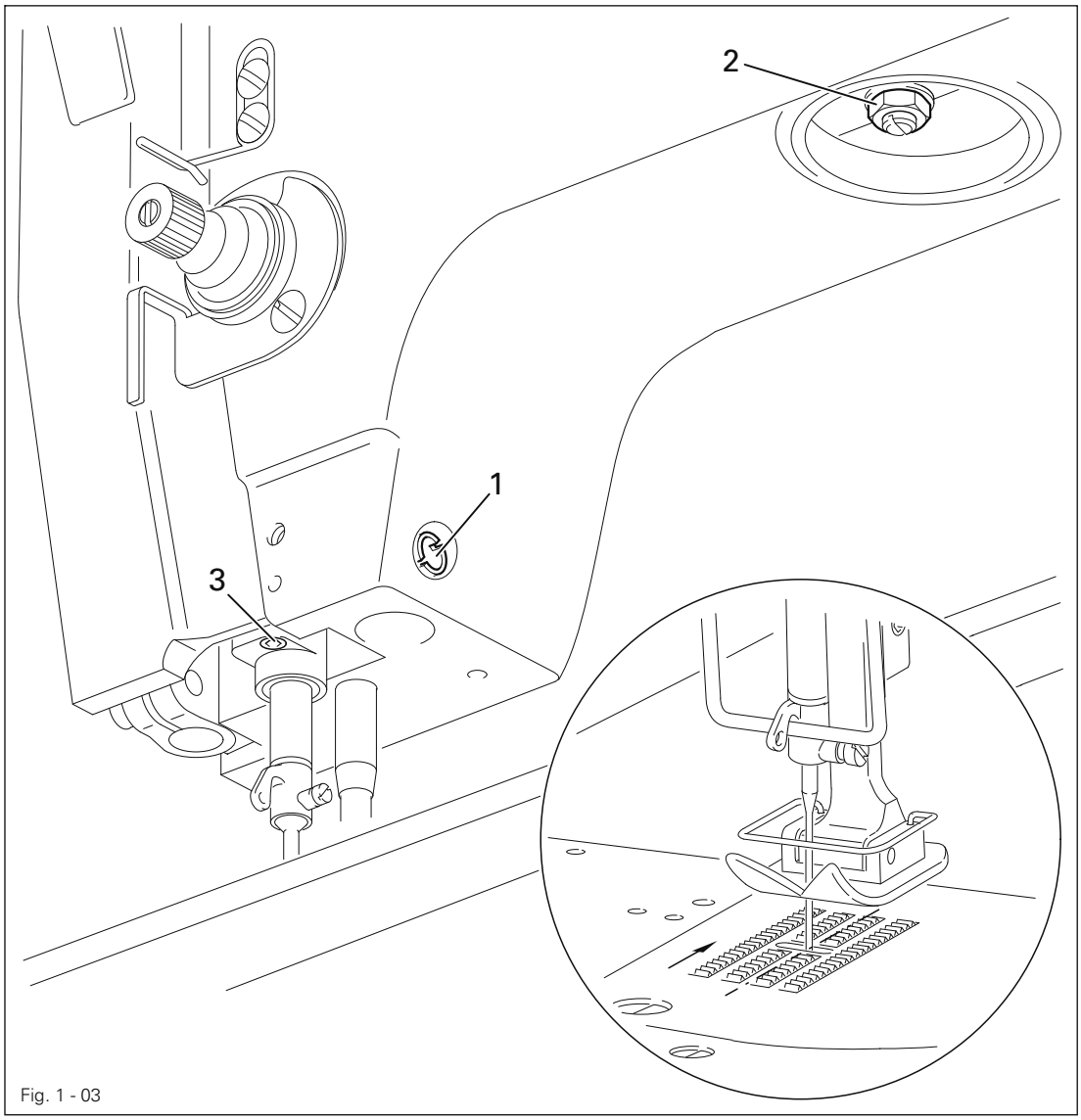

Fig. 1 - 03

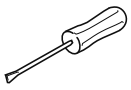

- Bring the needle bar to b.d.c.
- Adjust the eccentric pin **1** (nut **2** and screw **3)** in accordance with the **requirement**.

1.05.03 Parallel guiding of the needle bar

Requirement
Guide bar **5** must be parallel to the needle bar.

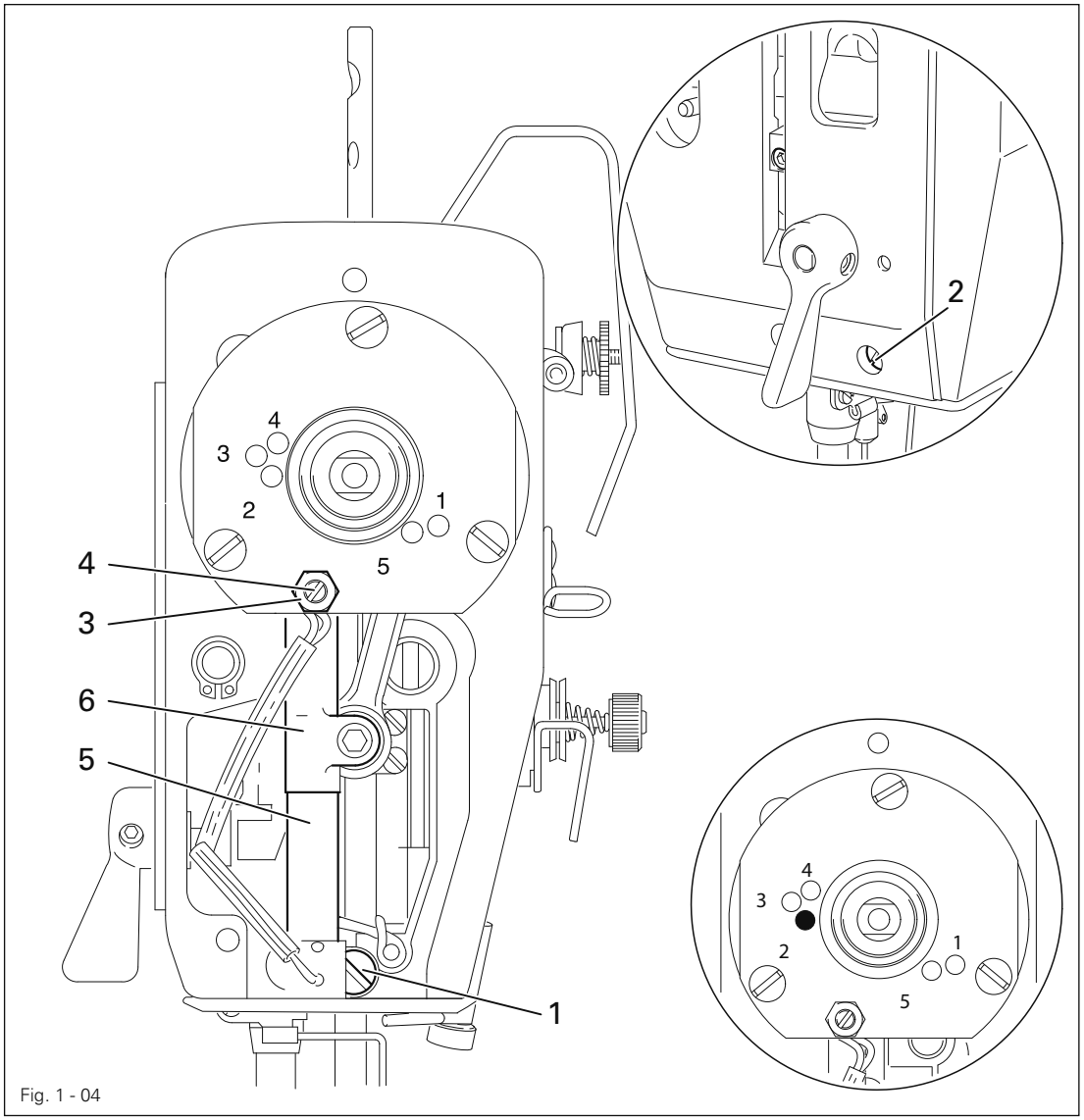

Fig. 1 - 04

- Bring the needle bar to tdc (hole **2**).
- Loosen screws **1**,**2** and nut **3**.
- The largest eccentricity of pin **4** must be facing downwards.
- Bring the groove on guide bar **5** into a position in which it rests against eccentric pin **4**, turn eccentric pin **4** in accordance with the **requirement** and tighten nut **3**.
- Push guide bar **5** downwards and then upwards as far as possible. Bushing **6** must not move laterally during this movement (readjust eccentric pin **4** if necessary).
- Move guide bar **5** until it rests against eccentric pin **4** and tighten screws **1** and **2**.

1.05.04 Locking lever

Requirement
The zigzag stitch adjustment lever **3** must be able to be locked in any position.

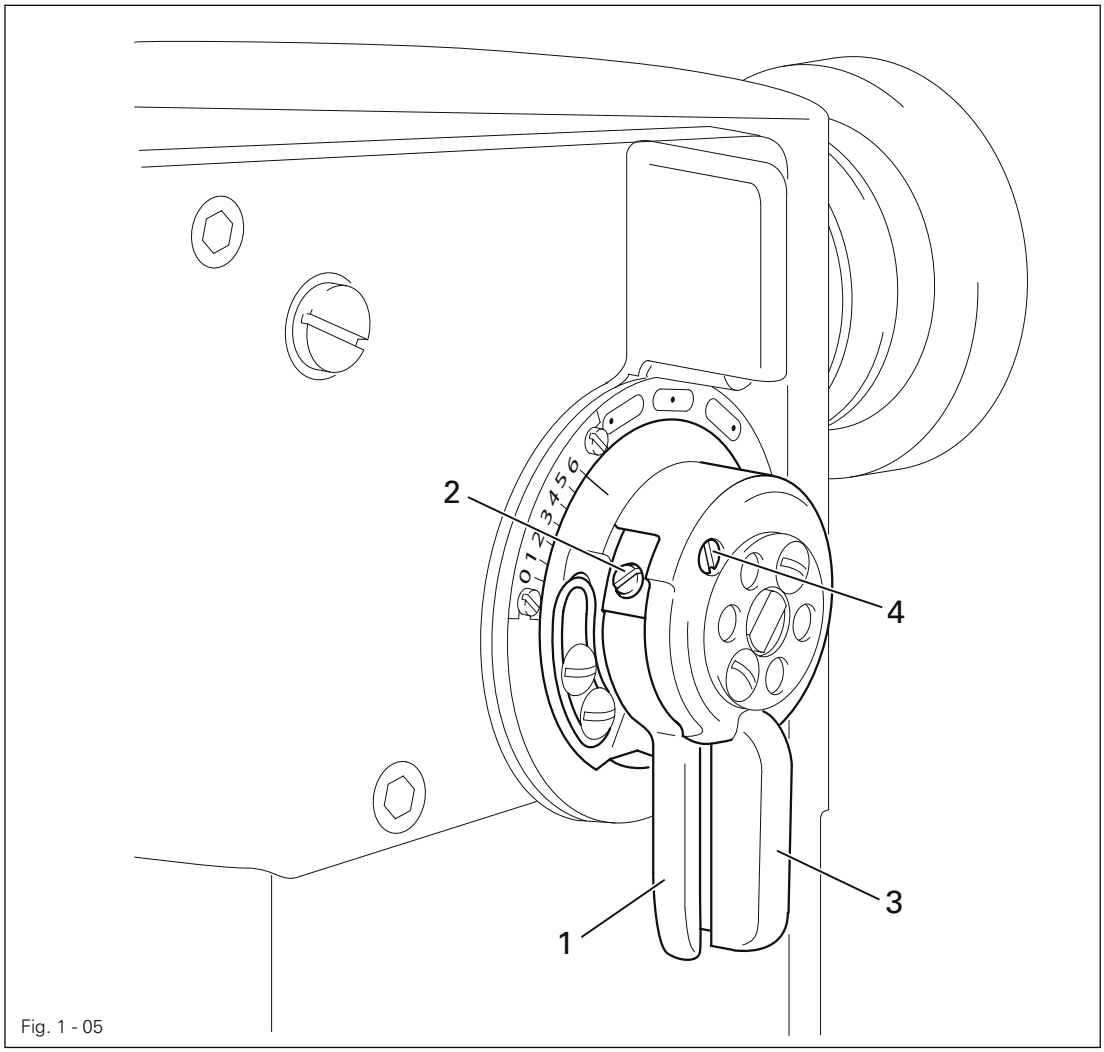

Fig. 1 - 05

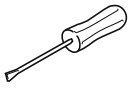

- Loosen screw **2.**
- Press locking lever **1** against the zigzag stitch adjustment lever **3.**
- Turn pivot pin **4** as far as possible to the left.
- Release locking lever **1.**
- Locking lever **1** must be parallel to the zigzag stitch adjustment lever **3.**
- Tighten screw **2.**

1.05.05 Zero stitch and zigzag stitch scale

Requirement

With the zigzag stitch set at "**0**":

1. the needle bar must not move laterally when the balancewheel is turned and
2. the marking "**0**" on scale **1** must be at marking **2.**

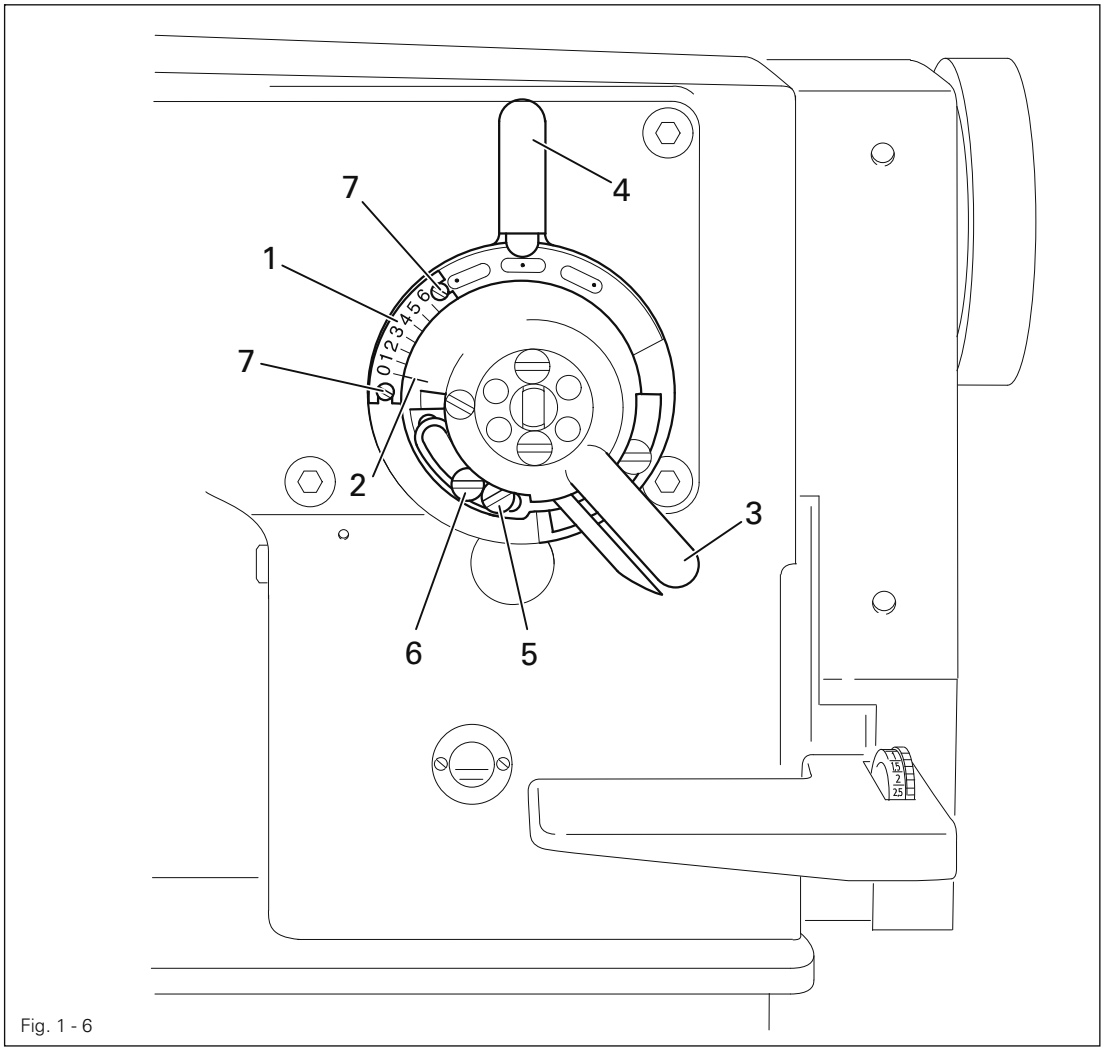

Fig. 1 - 6

- Set the needle position adjustment lever **4** to "**middle**" and loosen screws **5** and **6.**
- Run the machine slowly and turn the zigzag stitch adjustment lever **3** to the right until the needle bar no longer moves laterally.
- Turn the machine off. Move screw **5** to the right until it touches and then tighten it.
- Loosen screws **7** and move scale **1** in accordance with **requirement 2.**
- Tighten screws **7.**

Screw **6** remains loose for the following adjustment.

1.05.06 Centering the needle in the needle hole (crosswise to sewing direction)

Requirement
With the zigzag stitch set at "**0**" and the needle position setting at "**middle**" the needle must enter the center of the needle hole as seen across the direction of sewing.

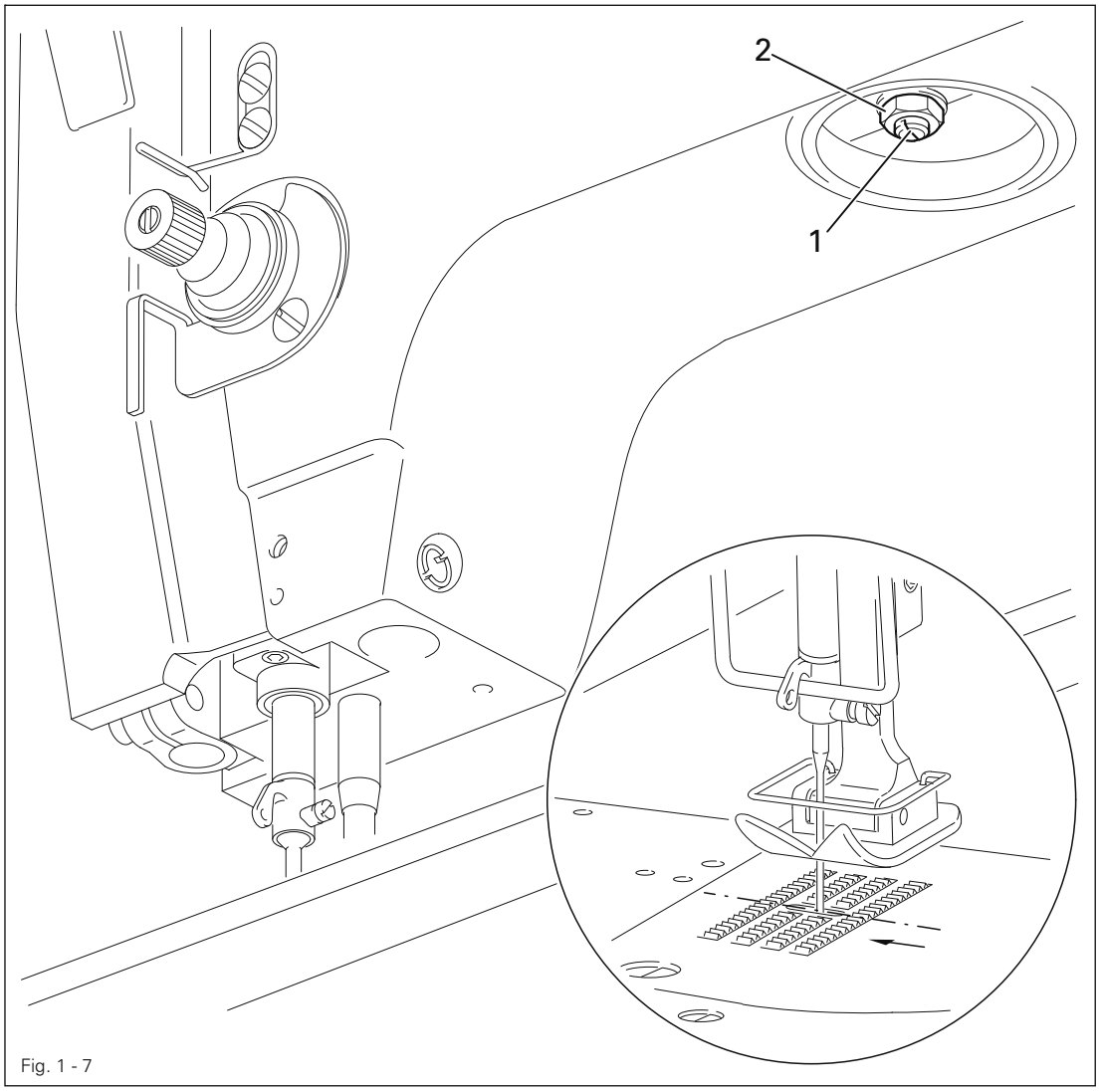

Fig. 1 - 7

- Adjust the eccentric pin **1** (nut **2)** in accordance with the **requirement**.

1.05.07 Zigzag stitch width

Requirement
At the largest zigzag stitch setting, marking **1** must be at the largest zigzag value on scale **2.**

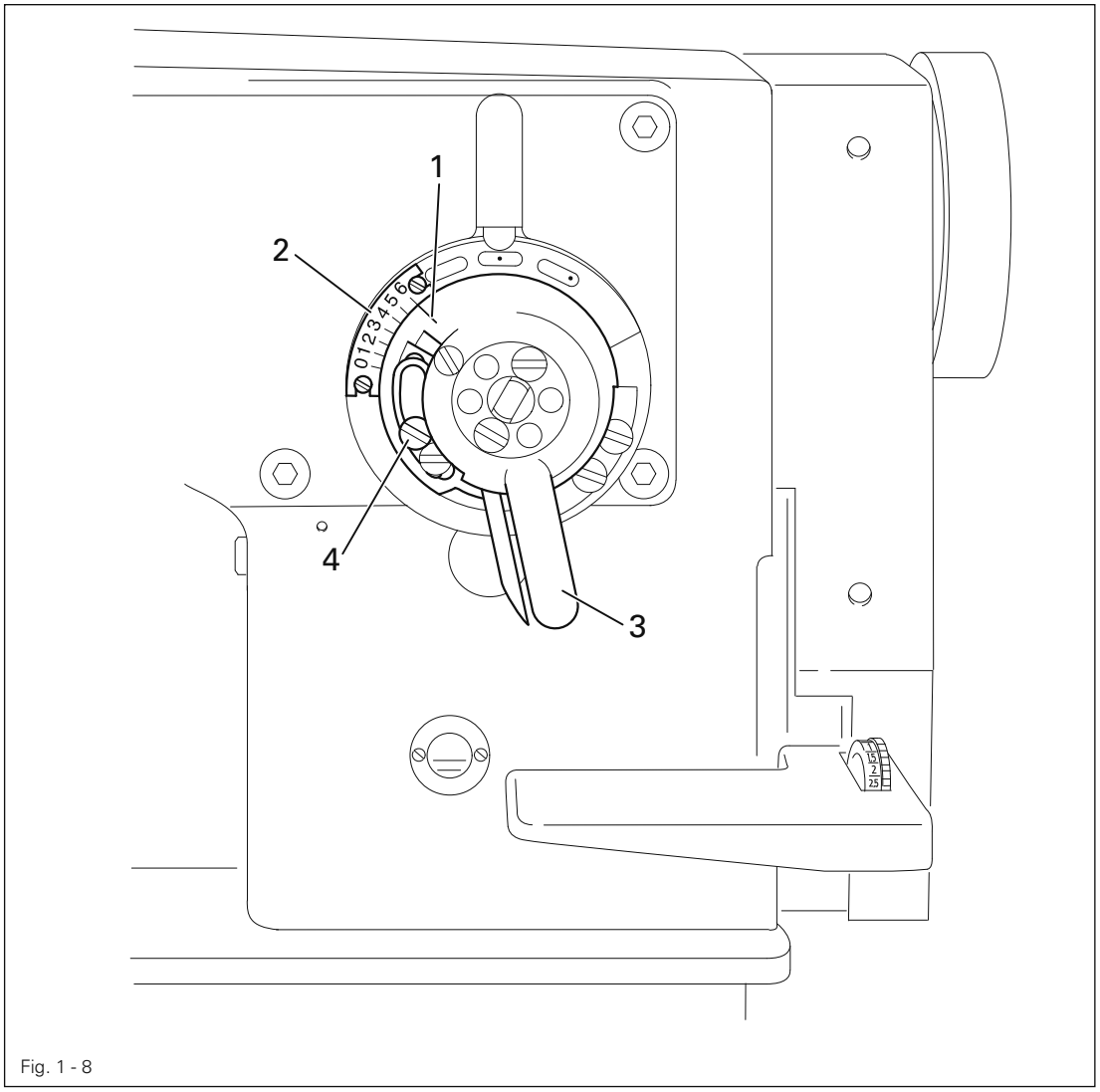

Fig. 1 - 8

- Turn the zigzag stitch adjustment lever **3** in accordance with the **requirement**.
- Move screw **4** upwards until it touches and then tighten it.

If the machine is equipped with a needle plate with a smaller hole than is marked on the scale, the zigzag limit must be set according to the needle hole width on the needle plate.

1.05.08 Zigzag stitch movement (only on the 918 and 938)

Requirement
When the needle bar, on the right of its throw, is positioned at t.d.c. (adjustment hole "**2**"), the needle bar should not move laterally when the zigzag stitch adjustment lever is moved to and fro.

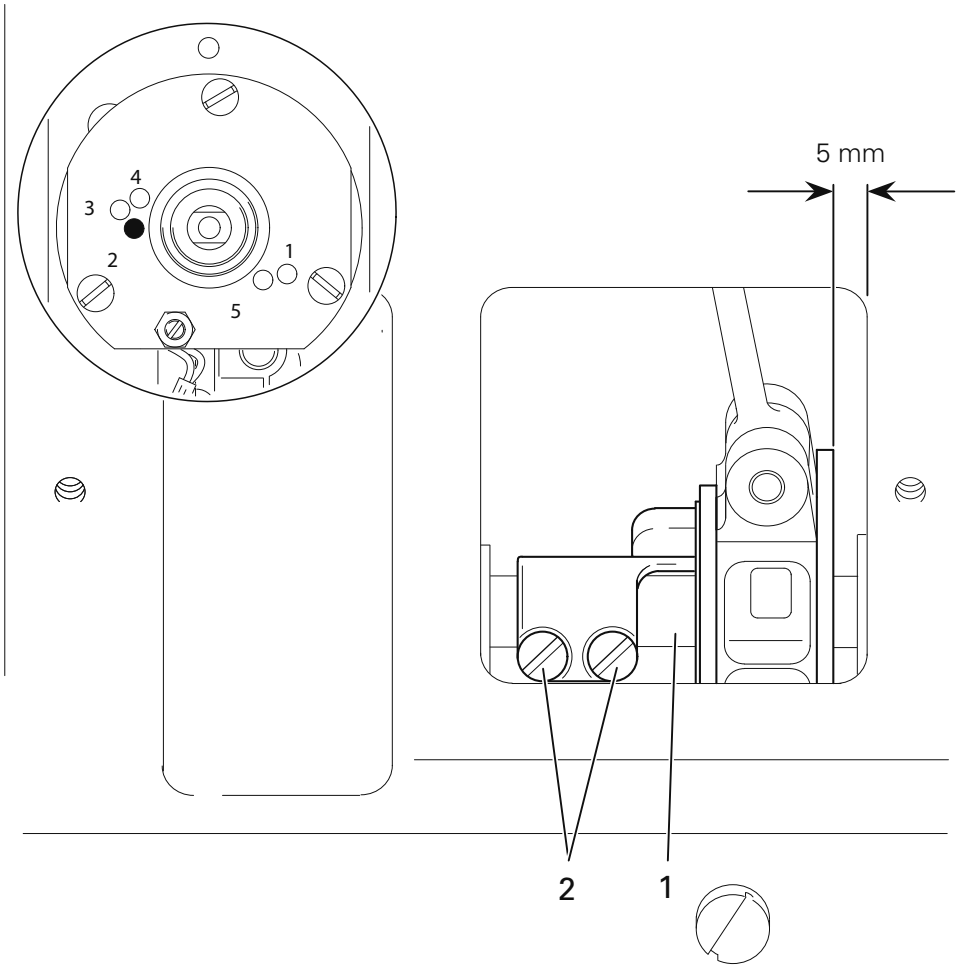

Fig. 1 - 9

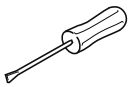

- Bring the needle bar, on the right of its throw, to t.d.c. and place the adjustment pin in hole "**2**" of the bearing plate (locking the machine).
- Turn the zigzag eccentric **1** (screws **2**) in accordance with the **requirement**. Make sure that he zigzag eccentric **1** is about **5 mm** away from the right inner side of the casting wall.
- Remove the adjustment pin from the bearing plate.

1.05.09 Needle penetration symmetry - left, centre and right (only on the 918 and 938)

Requirement
When the zigzag stitch is set at "**0**", the needle should penetrate in the centre of the needle hole. With the maximum zigzag stitch set, the needle should penetrate on the left and right at the same distance from the centre hole.

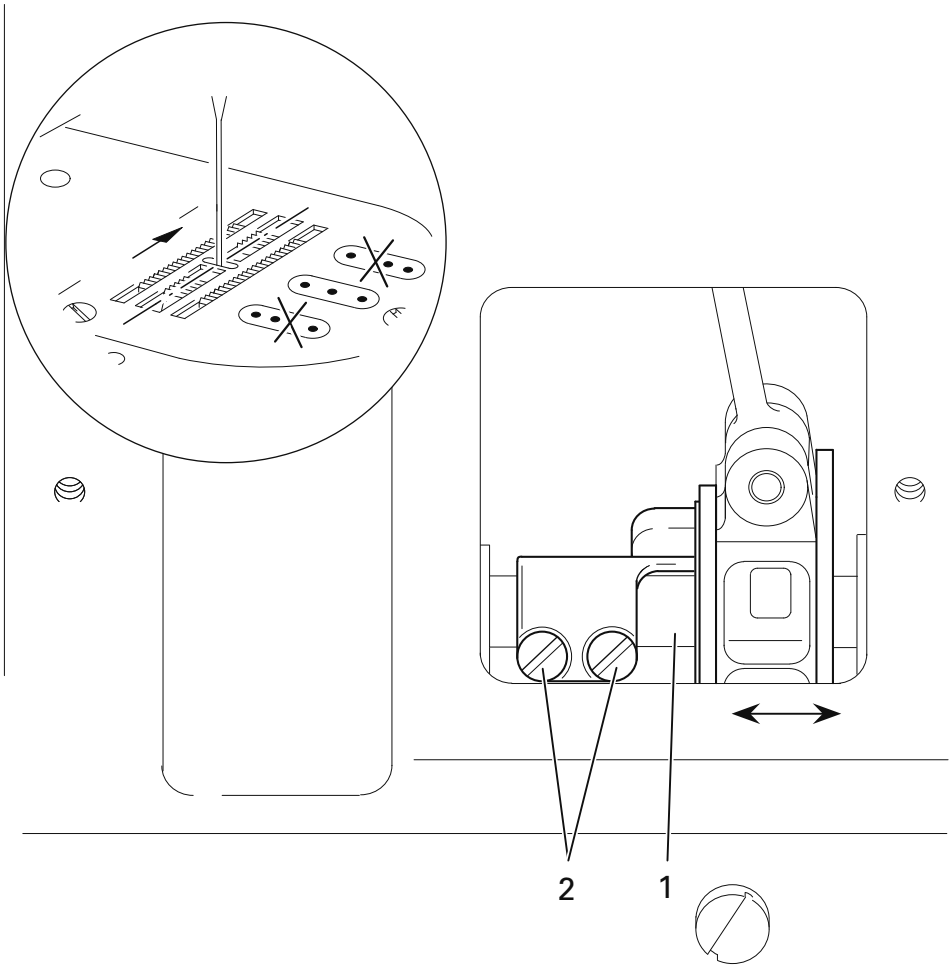

Fig. 1 - 9

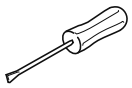

- Let the needle penetrate in the required zigzag settings using paper.
- Without twisting it adjust zigzag eccentric **1** (screws **2**) in accordance with the **requirement**.

1.05.10 Multi-stitch movement (only on the 918U and 938U)

Requirement

1. When the needle, at its b.d.c., penetrates on the right-hand side, the recess **5** on the control cam **3** should be positioned horizontally towards the rear.
2. The lateral movement of the needle bar should have been completed when the needle penetrates the workpiece (carry out a check with the largest zigzag setting).

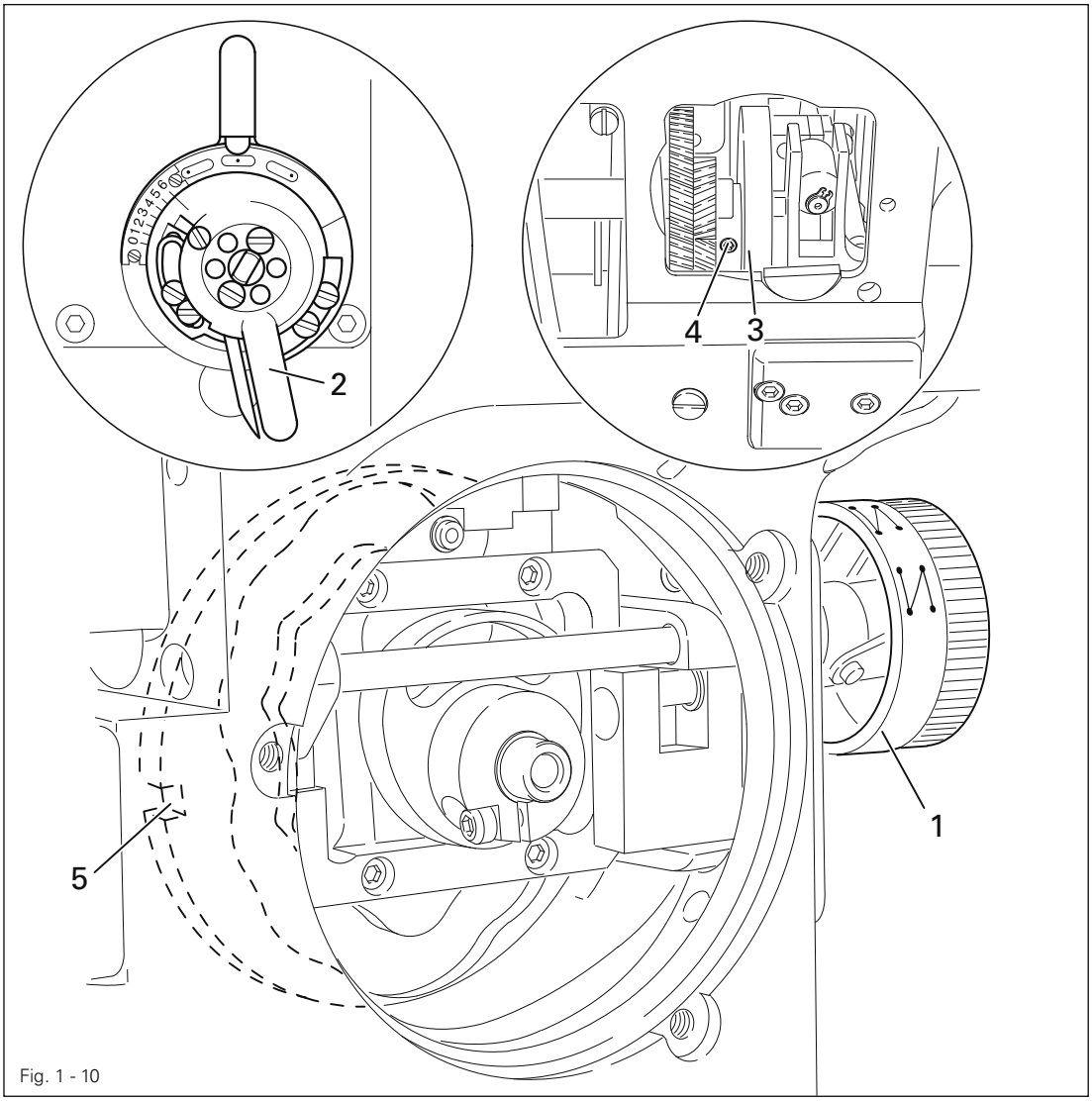

Fig. 1 - 10

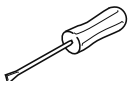

- Set the adjustment wheel **1** at multi-stitch.
- Set the zigzag stitch width lever **2** at "largest zigzag width".
- Adjust control cam **3** (screws **4)** in accordance with the **requirement**.

1.05.11 Zigzag movement (only on the 918U and 938U)

Requirement
When the needle bar, moving from its right b.d.c., reaches its t.d.c. (hole **2),** it should not carry out any lateral motion when the zigzag stitch width lever **4** is moved to and fro.

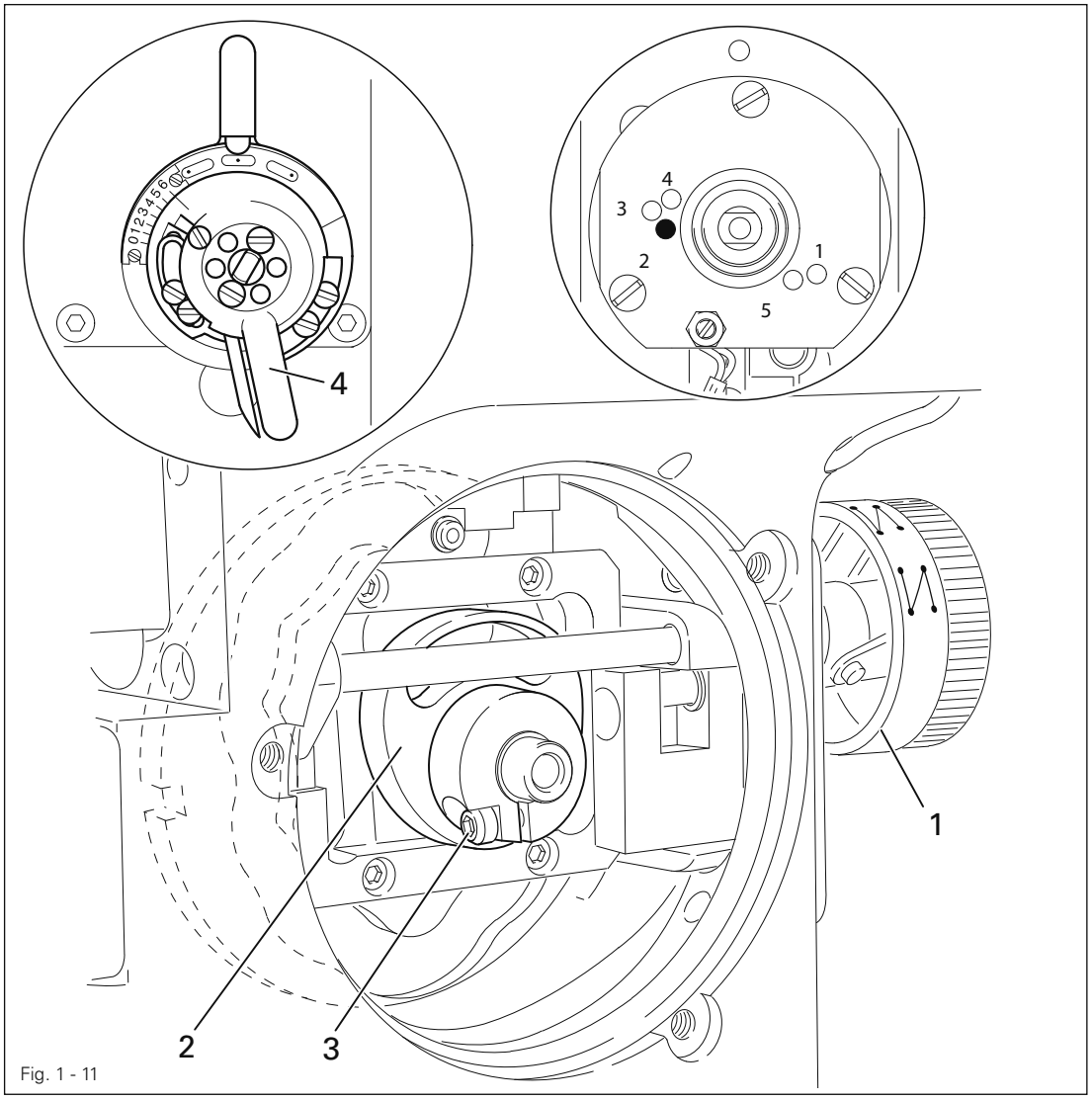

Fig. 1 - 11

- Set the adjustment wheel at zigzag.
- Adjust the zigzag eccentric **2** (screw **3)** in accordance with the **requirement**.

1.05.12 Target positioning sensor (only on the 918U and 938U)

Requirement
There should be a clearance of **0.2 – 0.3 mm** between sensor **1** and control cam **3.**

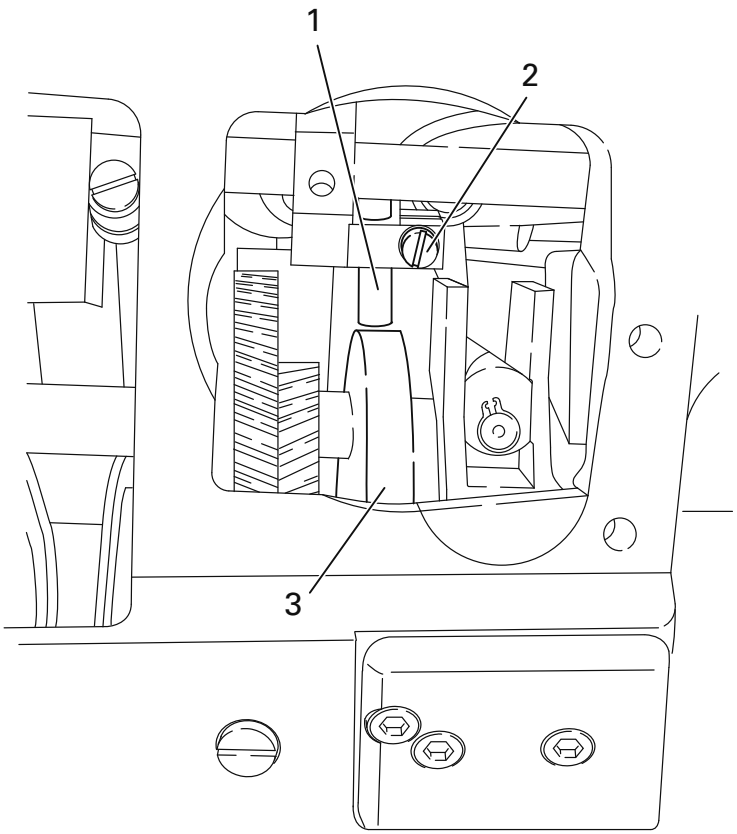

Fig. 1 - 12

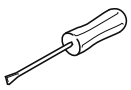

- Adjust sensor **1** (screws **2)** in accordance with the **requirement**.

1.05.13 Needle position adjustment lever

Requirement
The left and right throws of the needle must be the same size at the largest zigzag stitch setting and at the left or right needle position.

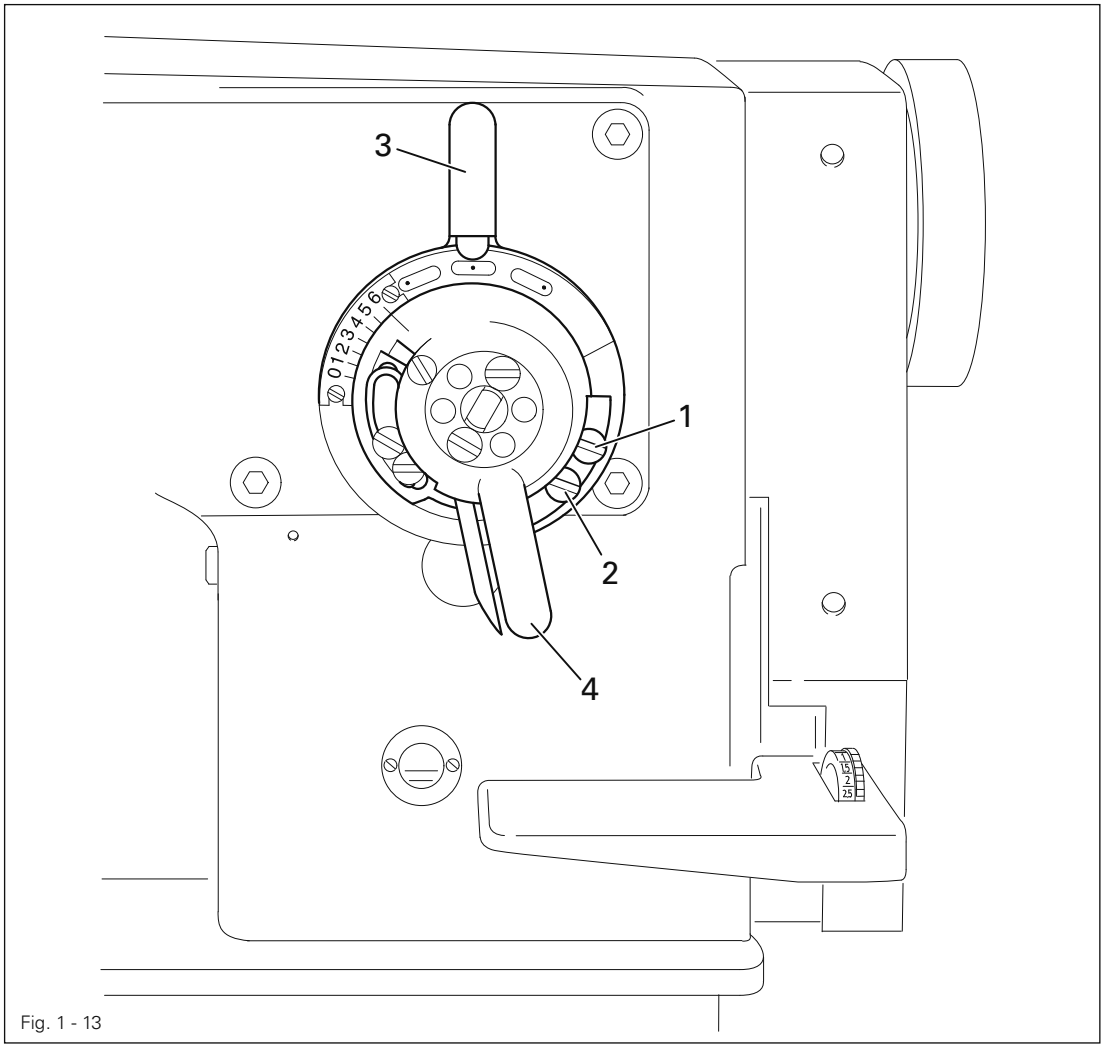

Fig. 1 - 13

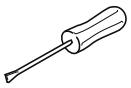

- Loosen screws **1** and **2.**
- Set the needle position adjustment lever **3** to "**middle**" and the zigzag stitch adjustment lever **4** at the largest zigzag stitch.
- Place a piece of paper underneath the presser foot and perforate it to the left and right with the needle.
- Set the zigzag stitch adjustment lever **4** at "**0**" and move the needle position adjustment lever **3** to the right/left until the needle is exactly over the perforations made in the last step.
- For the left needle-position bring screw **1** to a position where it touches and tighten it and for the right needle-position do the same with screw **2.**

1.05.14 Zero position of the bottom feed dog (with closed gear box)

Requirement
With the stitch length set at "**0**", the bottom feed dog should not carry out any feeding motion when the balance wheel is turned.

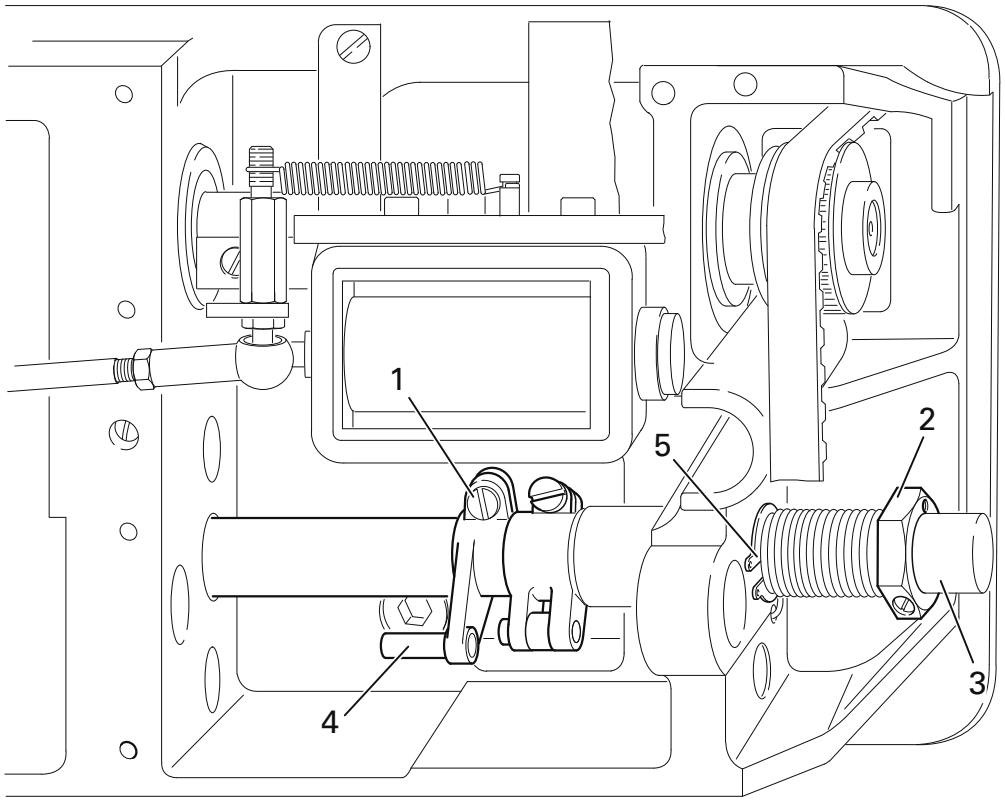

Fig. 1 - 14

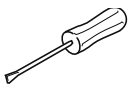

- Loosen screw **1.**
- Fit the fork wrench (SW **27**) to the spring clamp ring **2** using it to hold the regulating
- shaft **3.**
- While continually turning the balance wheel, adjust the fork wrench on the spring clamp ring **2** in accordance with the **requirement**.
- In this position move adjusting crank **4** and ring **5** against the metal frame and tighten screw **1.**
- Carry out a check in accordance with the **requirement**.

1.05.15 Zeroing the bottom feed (with open gearbox)

Requirement
With the stitch length set at "**0**" the bottom feed dog must not carry out any feeding motion when the balance wheel is turned.

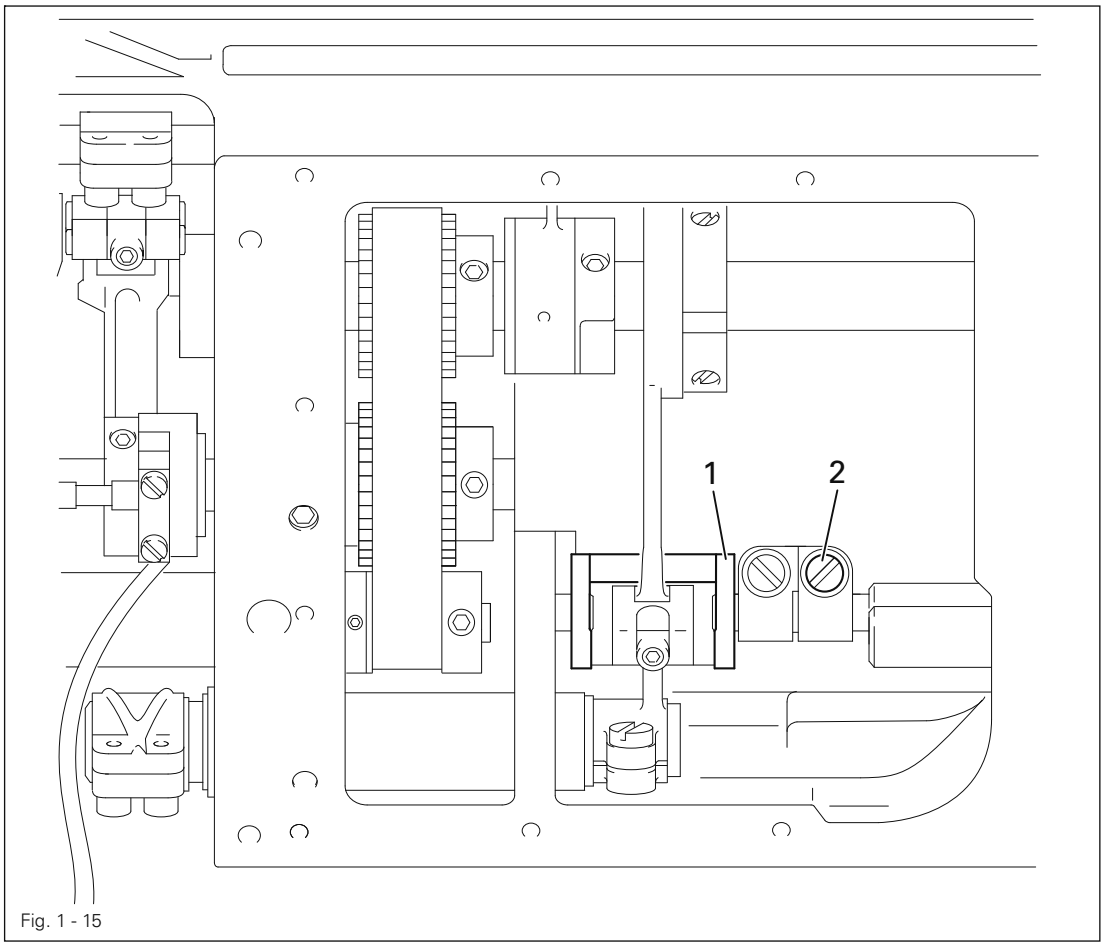

Fig. 1 - 15

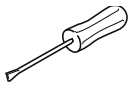

- Switch on the machine.
- While continuously turning the balance wheel, adjust reversing crank **1** (screw **2**) in accordance with the **requirement**.
- Switch off the machine.

1.05.16 Feeding motion of the bottom feed dog

Requirement
With the maximum stitch length set and the needle bar position **1.0** past tdc (hole **4),** the bottom feed dog must not move when the reverse feed lever is pressed.

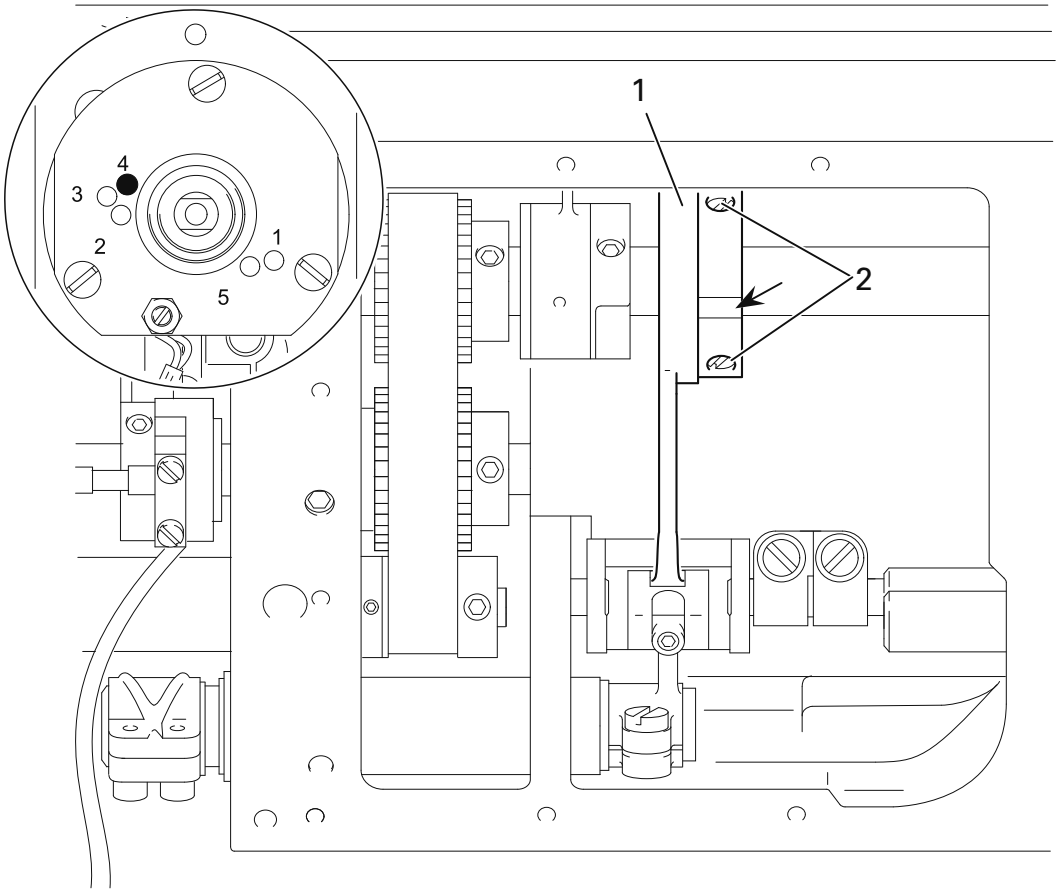

Fig. 1 - 16

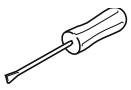

- While continuously operating the reverse feed control, adjust feeding eccentric **1** (screws **2)** in accordance with the **requirement** (the counter-sinking in feeding eccentric **1** must be visible).



An axial displacement of feeding eccentric **1** is not allowed.

1.05.17 Lifting motion of the bottom feed dog

Requirement
With the stitch length set at "**0**" and the needle bar position at **0.25 mm** past tdc (hole **3)** the bottom feed dog must be at its upper point of reversal.

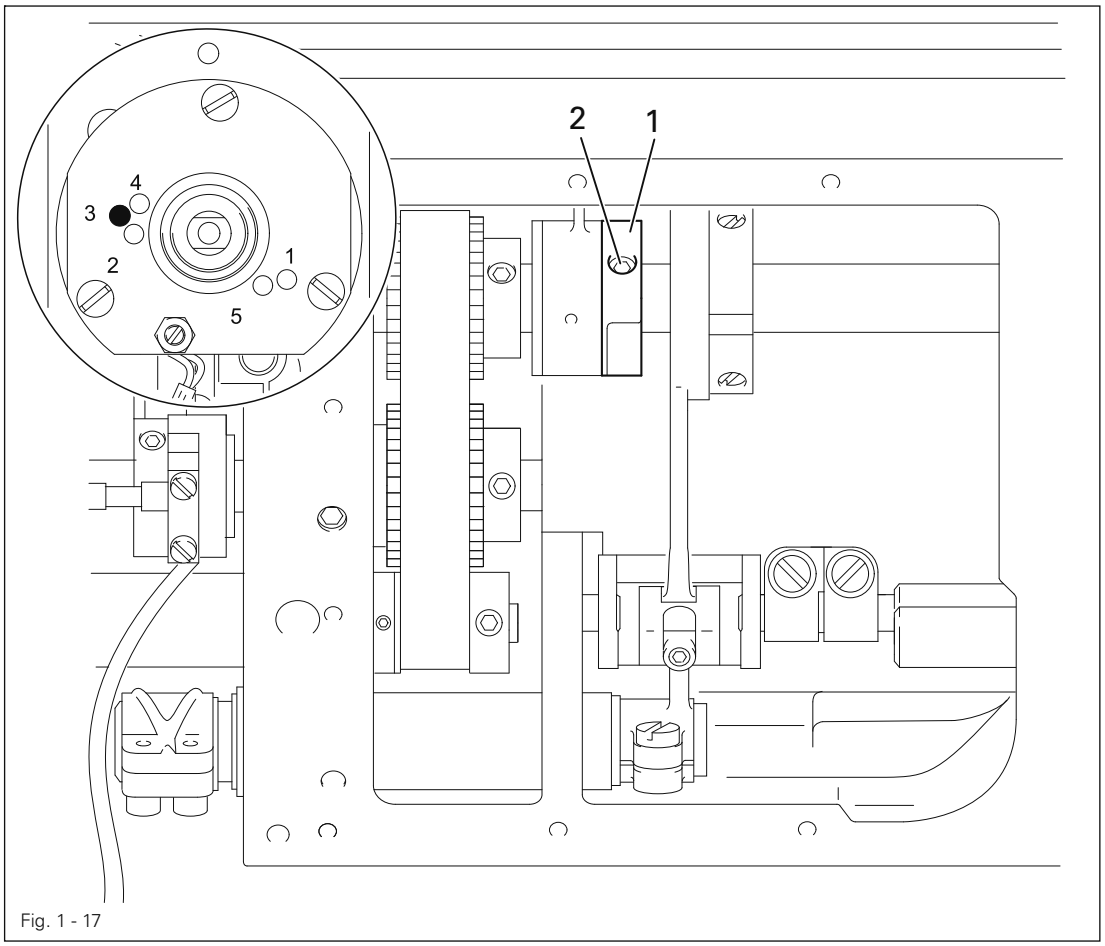

Fig. 1 - 17

- Adjust feed lifting eccentric **1** (screw **2)** in accordance with the **requirement**.

An axial displacement of feed lifting eccentric **1** is not allowed.

1.05.18 Drive belt in the gearbox housing

Requirement
Drive belt 4 must be tightened so that the machine runs freely and the belt sprockets do not have any noticeable play.

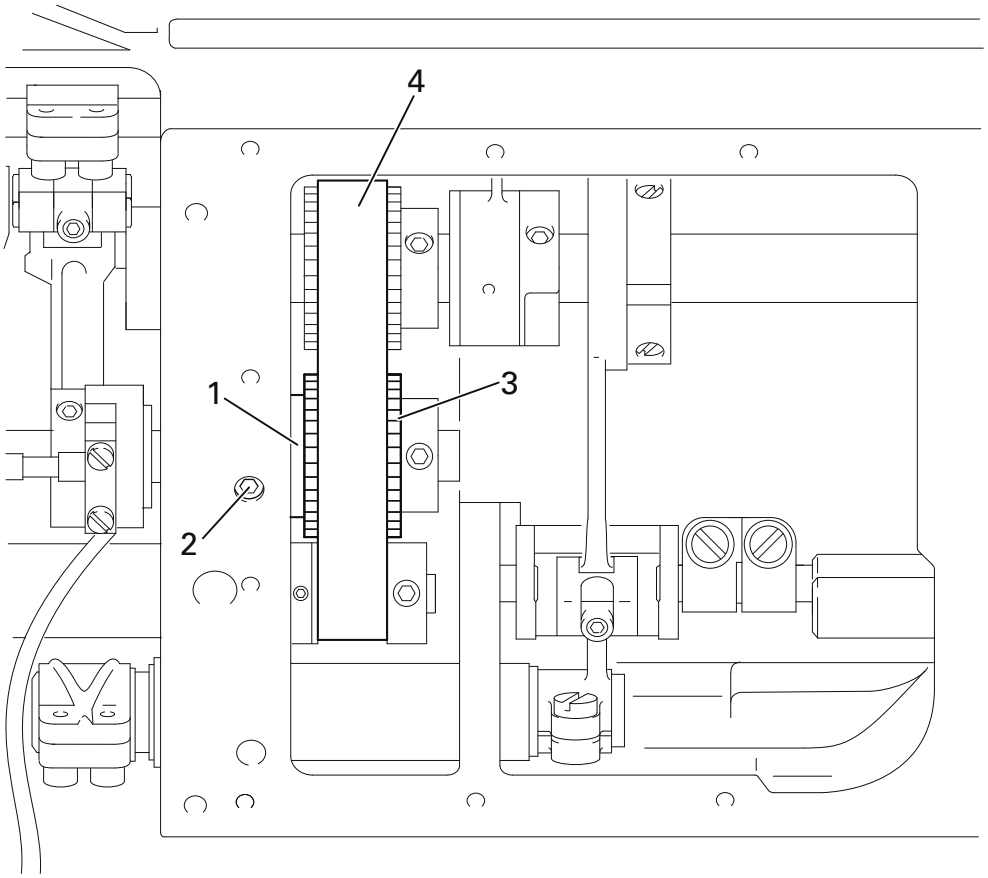

Fig. 1 - 18

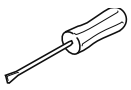

- Adjust eccentric bearing bush **1** (screw **2**) in accordance with the **requirement** and so that drive belt **4** is in the centre of bobbin opener drive wheel **3.**

1.05.19 Hook bearing bracket

Requirement
The hook shaft must be touching the hook bearing bracket adjustment gauge **1** at the top and the side.

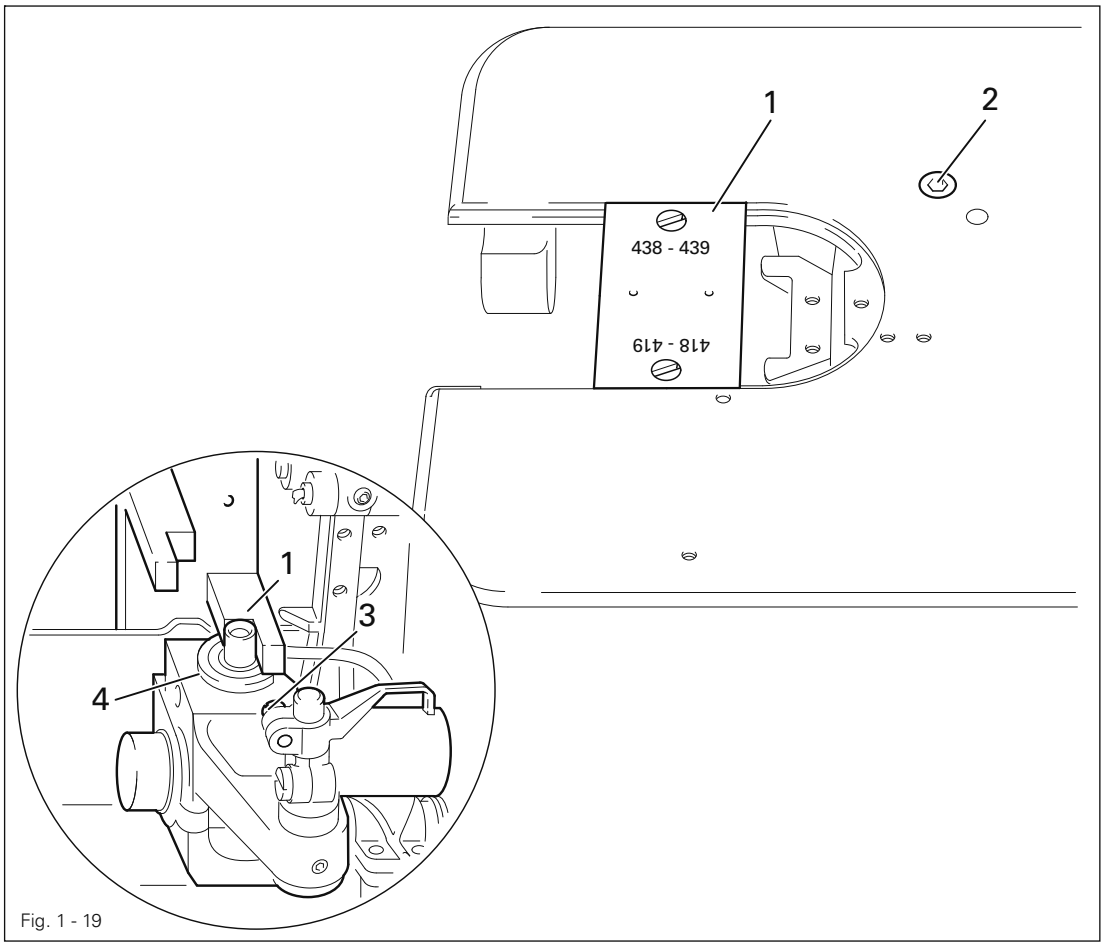

Fig. 1 - 19

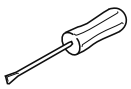

- Loosen screw **3.**
- Swing the bobbin case opener to the right and remove the hook.
- Loosen screw **2** and loosen the draw key underneath it by lightly tapping the head of
- the screw.
- Screw on the hook bearing bracket adjustment gauge.
- It must be possible to read the numbers "**438-439**" from the front.
- Move or turn hook bearing bracket **4** in accordance with the **requirement**.
- Tighten screw **2.**
- Adjust the bobbin case opener in accordance with subsection **1.05.24** Bobbin case opener position.

1.05.20 Hook lubrication

Requirement
When the machine is running at full speed, after about **10** seconds a fine oil streak should be visible on a strip of paper held over the needle plate cutout.

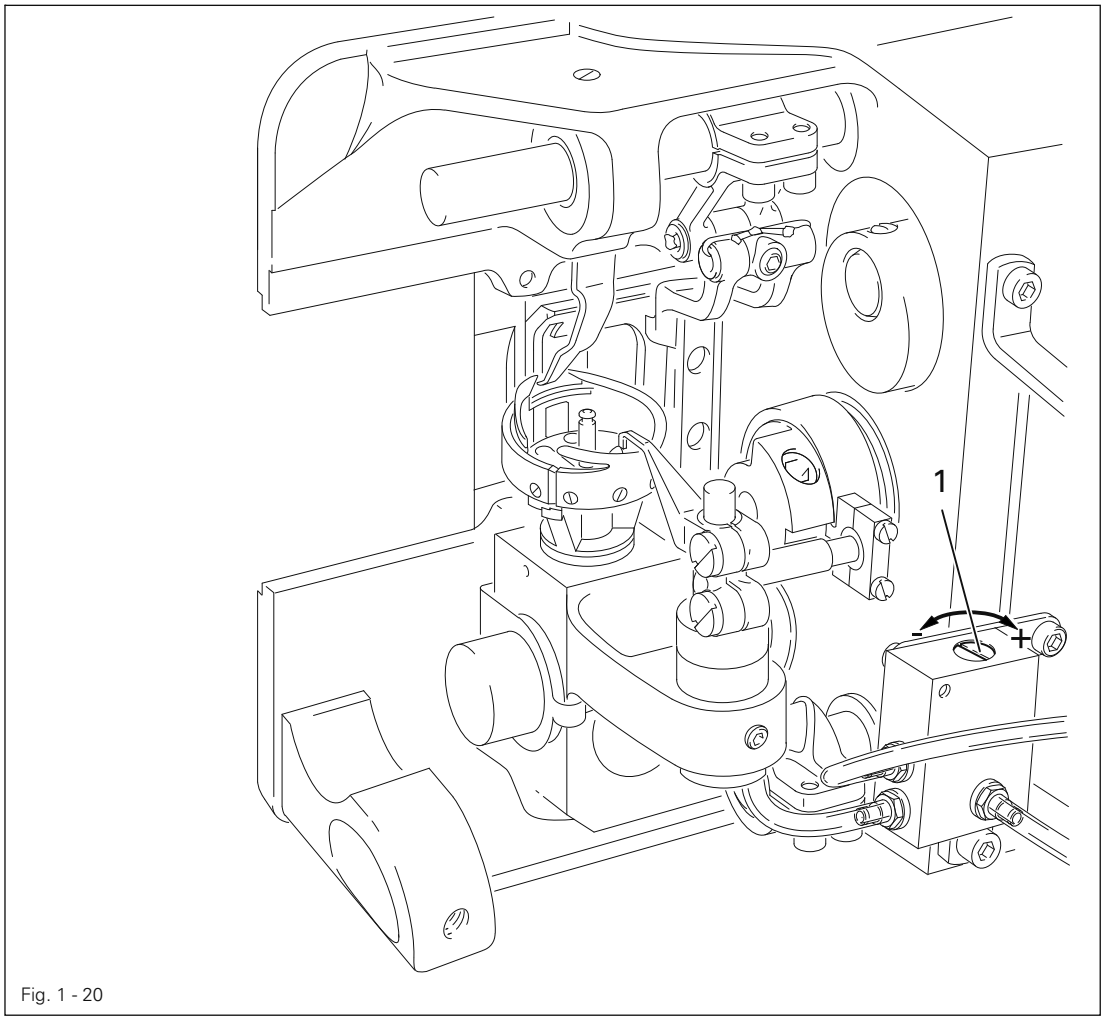

Fig. 1 - 20

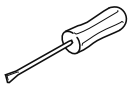

- Adjust screw **1** in accordance with the **requirement**.

1.05.21 Pre-adjusting the needle height

Requirement
With the needle bar at tdc (hole **2)** the distance between the point of the needle and the needle plate must be **19 mm**.

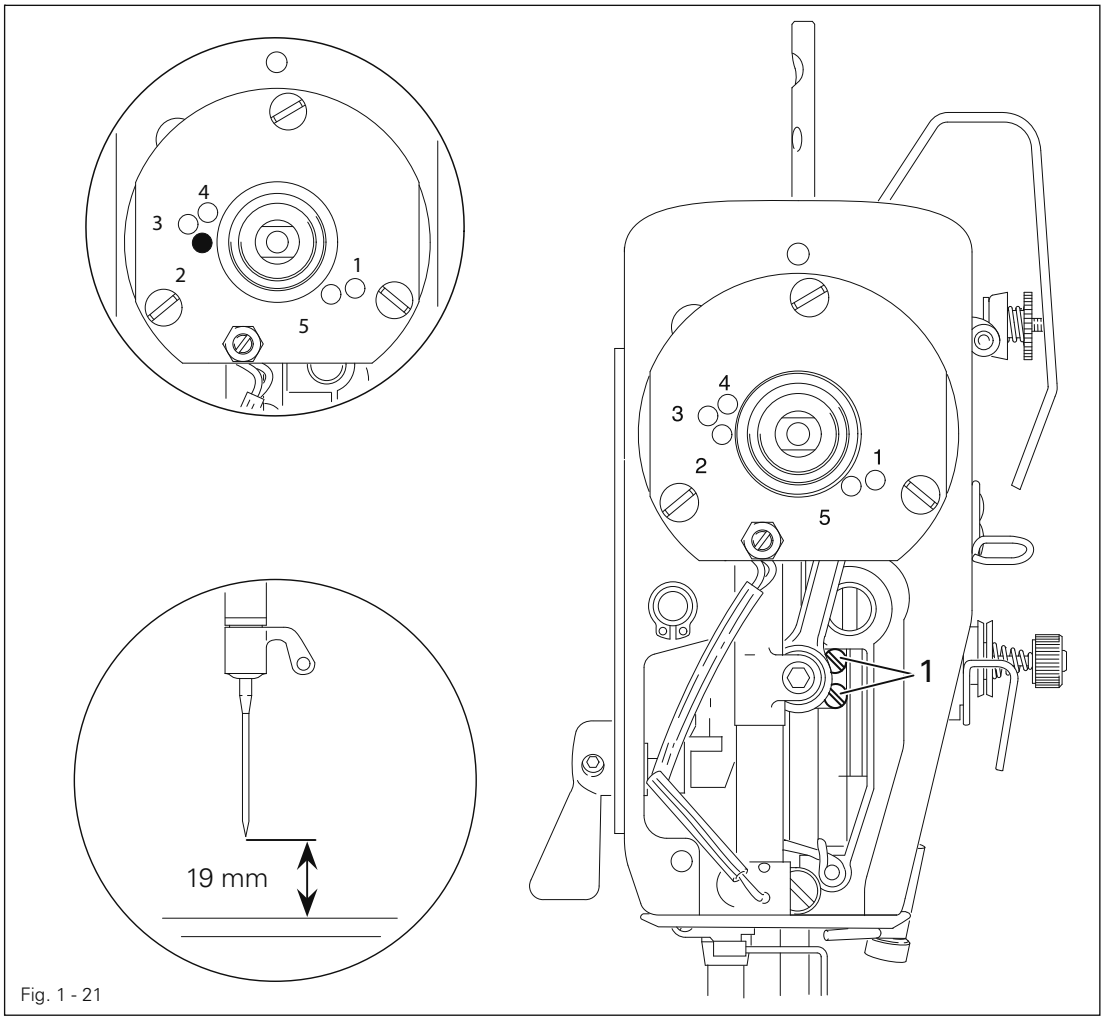

Fig. 1 - 21

- Without turning it, adjust the needle bar (screws **1)** in accordance with the **requirement**.

1.05.22 Needle rise, hook-to-needle clearance and bobbin case positioning-finger

Requirement

1. With the needle position set at "**middle**", the zigzag stitch setting at "**0**" and the needle bar position **2.0** past bdc (hole **1)** the hook point must be in the middle of the needle and the distance between the needle and the hook point must be **0.05** - **0.1 mm**.
2. The bobbin case positioning-finger must be fitted so that there is a clearance of **0.5 mm** between the bottom section of the bobbin case and the front edge of the bobbin case positioning-finger (see arrow).

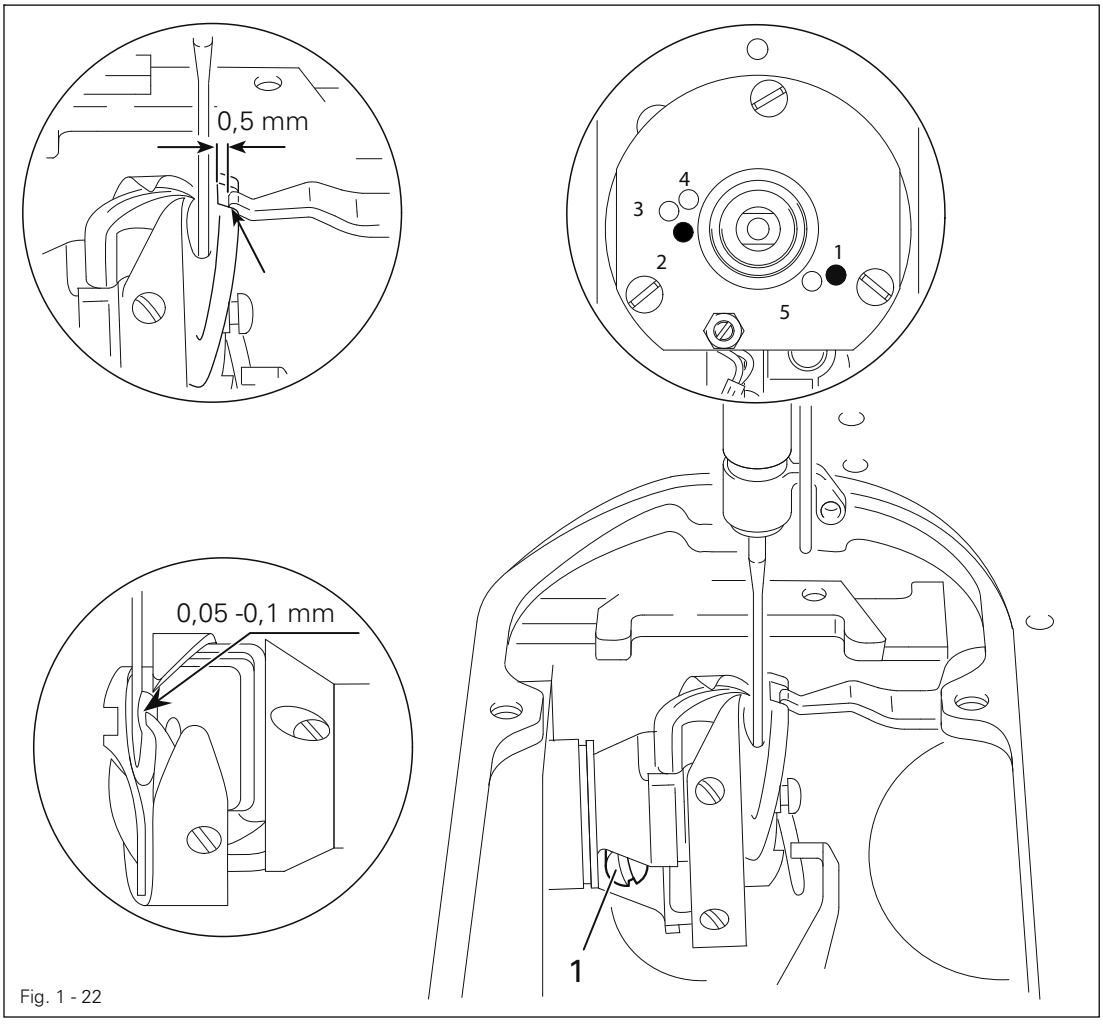

Fig. 1 - 22

- Adjust the hook (screw **1)** in accordance with **requirement 1.**
- Fit the bobbin case position stop in accordance with **requirement 2.**

1.05.23 Final adjustment of the needle height

Requirement
With the zigzag stitch set at "**0**", the needle position set at "**left**" and the hook point in the middle of the needle, the top edge of the needle eye must be **0.5 mm** underneath the hook point.

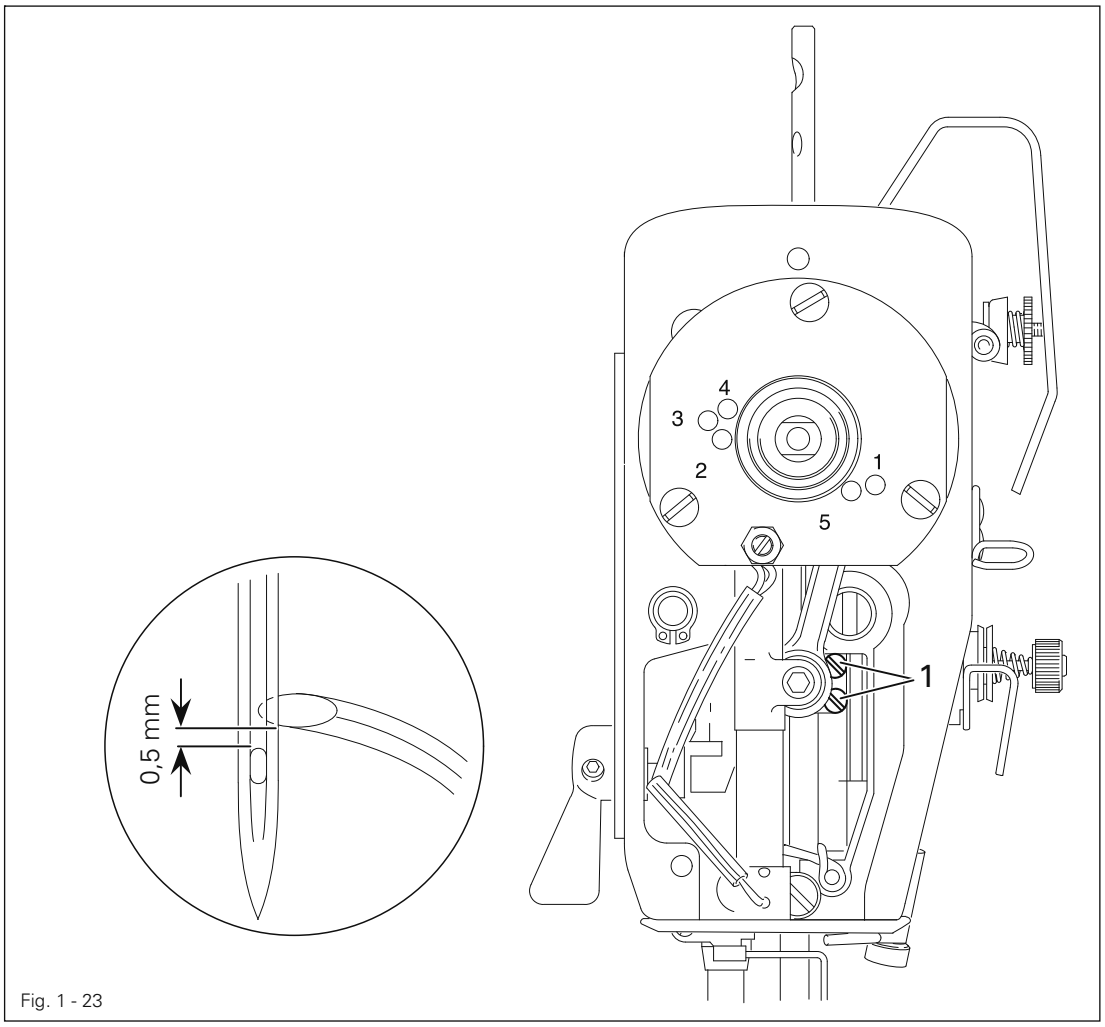

Fig. 1 - 23

- Without turning it, adjust the needle bar (screws **1)** in accordance with the **requirement**.

1.05.24 Bobbin case opener position

Requirement

1. There must be a clearance of **0.5 mm** between the top edge of the bobbin case opener and the inner edge of the bottom section of the bobbin case.
2. Between the bobbin case opener finger and the bottom section of the bobbin case opener there must be a clearance of **0.8 mm**.
3. At the left point of reversal of the bobbin case opener the bobbin case positioning-finger must be approx. **0.3 mm** from the right side of the groove in the bottom section of the bobbin case.

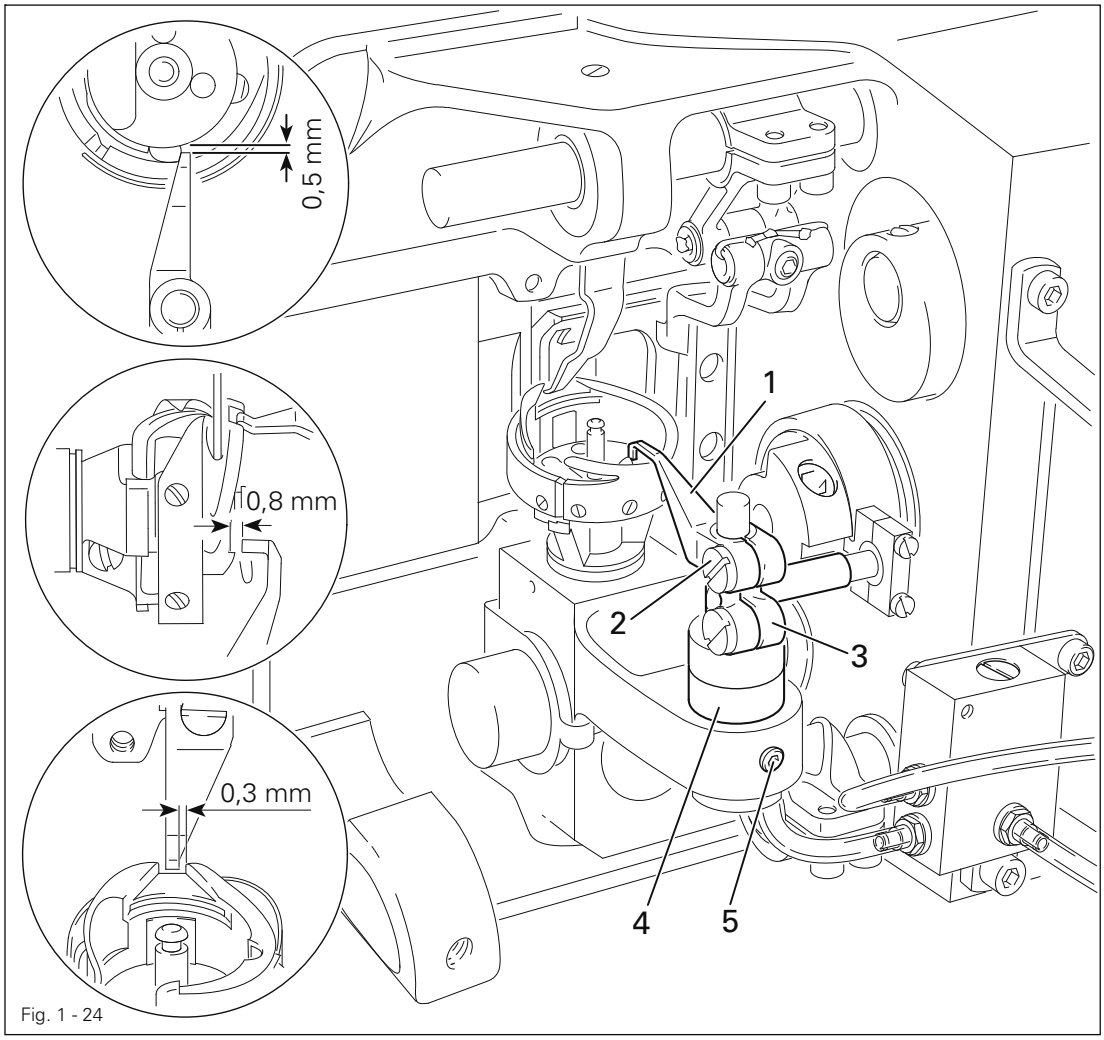

Fig. 1 - 24

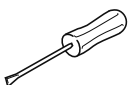

- Loosen screw **2.**
- Place bobbin opener **1** on the right side of the bobbin case base, press it against clamp crank **3** located underneath this and slightly tighten screw **2.**
- Adjust eccentric bearing bush **4** (screw **5)** in accordance with **requirement**s **1** and **2.**
- Adjust bobbin opener **1** in accordance with **requirement 3** and tighten screw **2,** taking care to see that bobbin opener **1** is touching clamp crank **3**

1.05.25 Bobbin case opener motion

Requirement
With the needle bar **2.0** past bdc (hole **1)** the bobbin case opener **3** must be at its right point of reversal.

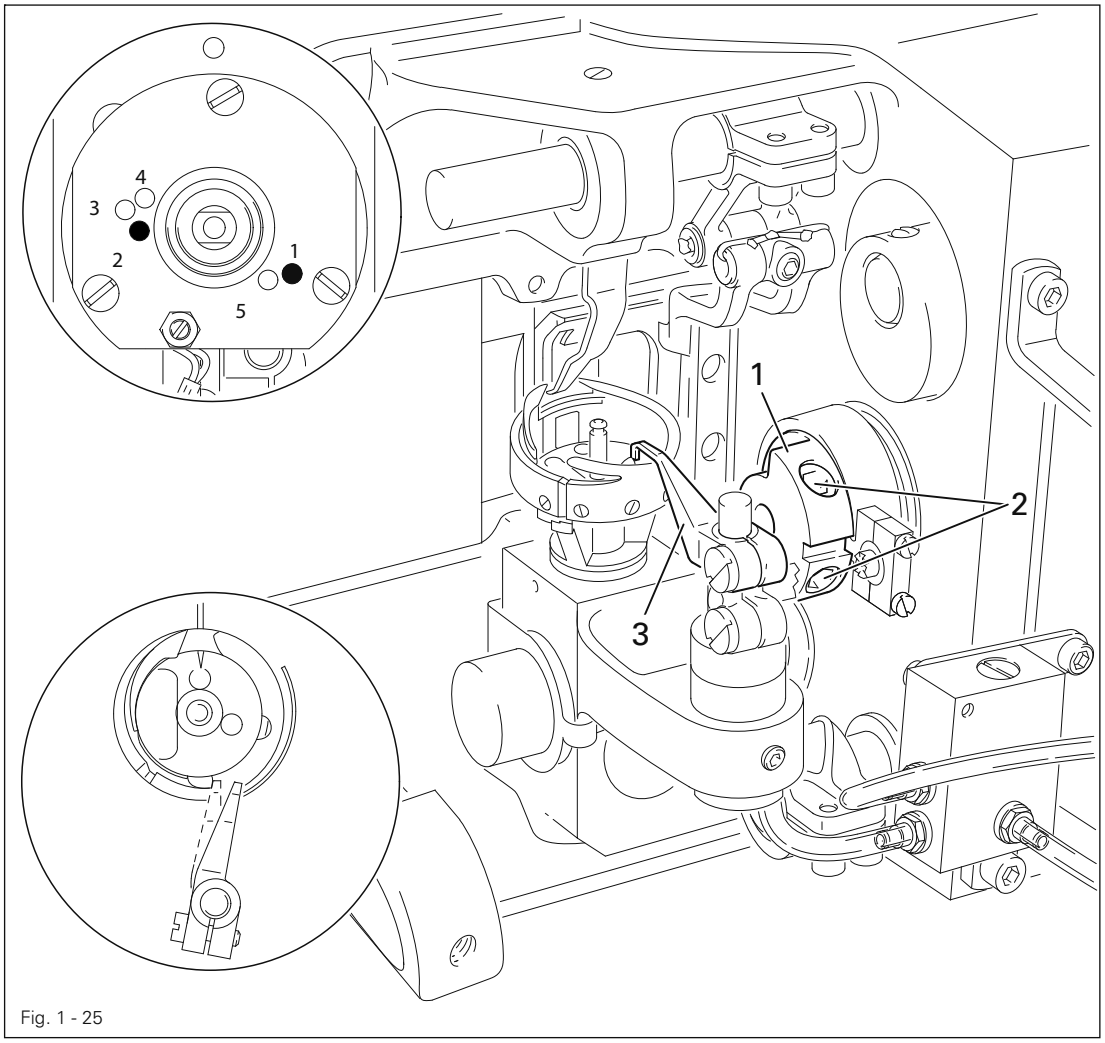

Fig. 1 - 25

- Adjust bobbin opener eccentric **1** (screws **2)** in accordance with the **requirement**.

1.05.26 Bottom feed dog height

Requirement
With the stitch length set at "**0**" and the needle bar position at **0.25** past tdc (hole **3)** the bottom feed dog must be in the middle of the needle plate cutout and be touching the feed dog height-adjustment gauge along its entire length.

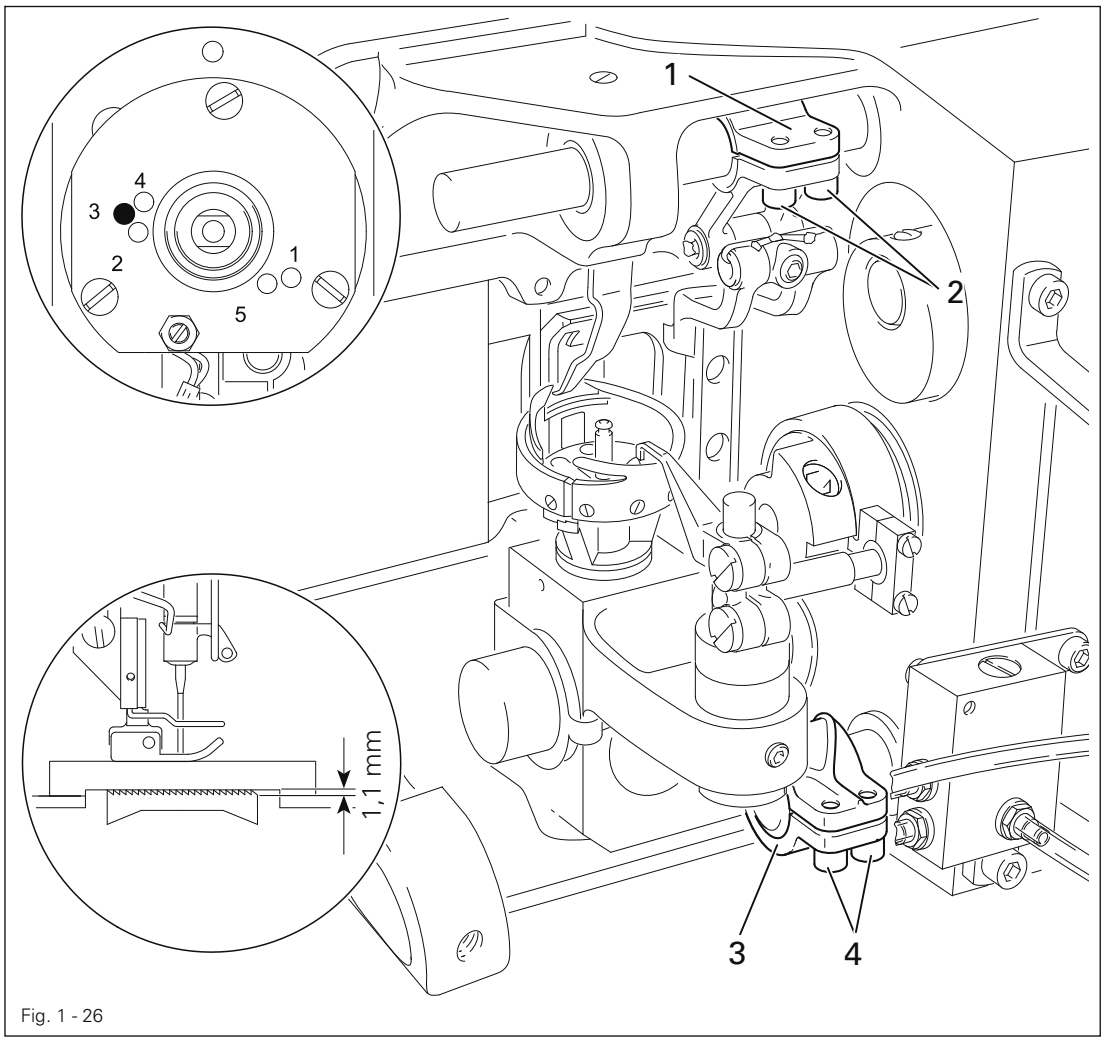

Fig. 1 - 26

- Position the feed dog adjustment gauge underneath the presser foot with the cutout facing downwards.
- Lower the presser foot onto it.
- Press the feed dog carrier up and position the feed dog in the middle of the needle plate cutout.
- Adjust lifting crank **1** (screws **2)** and clamp bushing **3** (screws **4)** in accordance with the **requirement**.

1.05.27 Presser foot to needle plate clearance

Requirement
When the hand lever is raised, the needle should penetrate exactly in the "needle hole centre" of the presser foot and the presser foot to needle plate clearance should be **7 mm**.

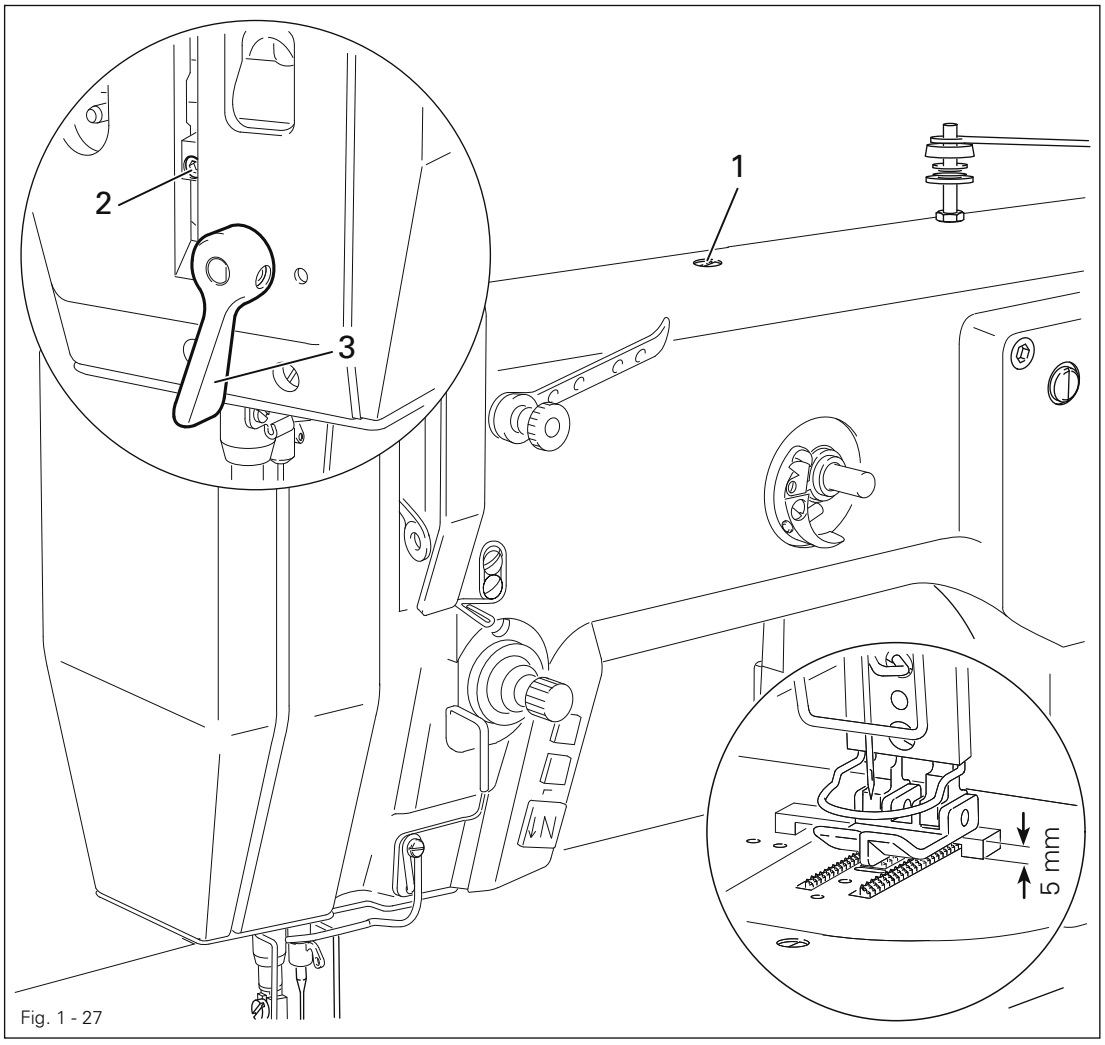

Fig. 1 - 27

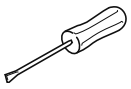

- Set the zigzag stitch adjustment lever at "**0**" and the stitch position adjustment lever at "**centre**".
- Let the presser foot drop onto the needle plate and reduce the pressure on the presser bar by turning screws **1.**
- Place the feed dog adjustment gauge under the presser foot with the recess at the bottom.
- Loosen screw **2** and raise hand lever **3.**
- Allow the needle to penetrate the needle hole and align the presser foot in accordance with the **requirement**.
- Press the presser bar lifting piece down and tighten screw **2.**

1.05.28 Presser foot pressure

Requirement
Even at top sewing speed the material should be fed without problems. There should be no pressure marks on the material.

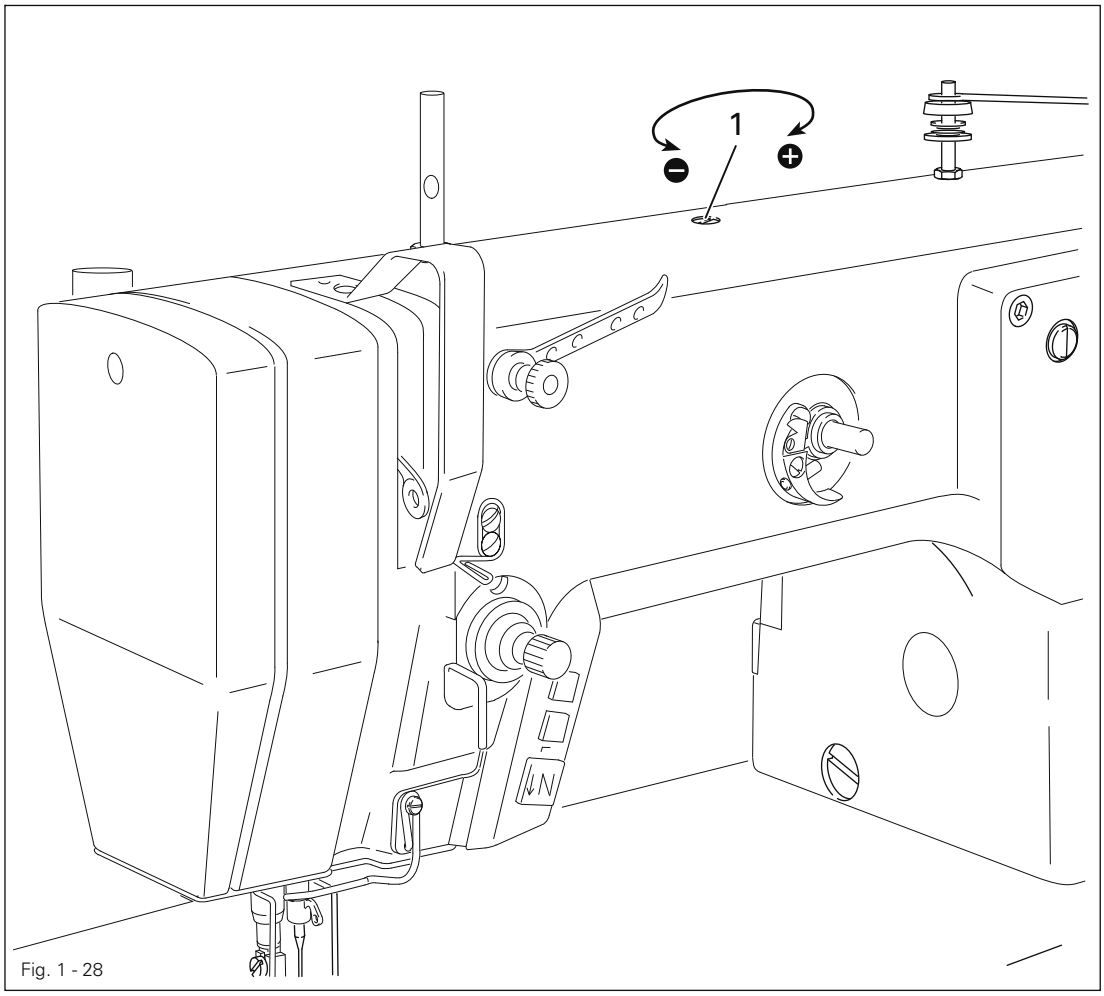

Fig. 1 - 28

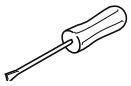

- Turn screw **1** in accordance with the **requirement**.

The presser foot pressure (screw **1**) can be increased (⊕) or reduced (⊖) as required.

1.05.29 Needle thread tension release (on machines without -900/24)

Requirement
When the hand lever is raised, the tensions disks should be at least **0.5 mm** apart.

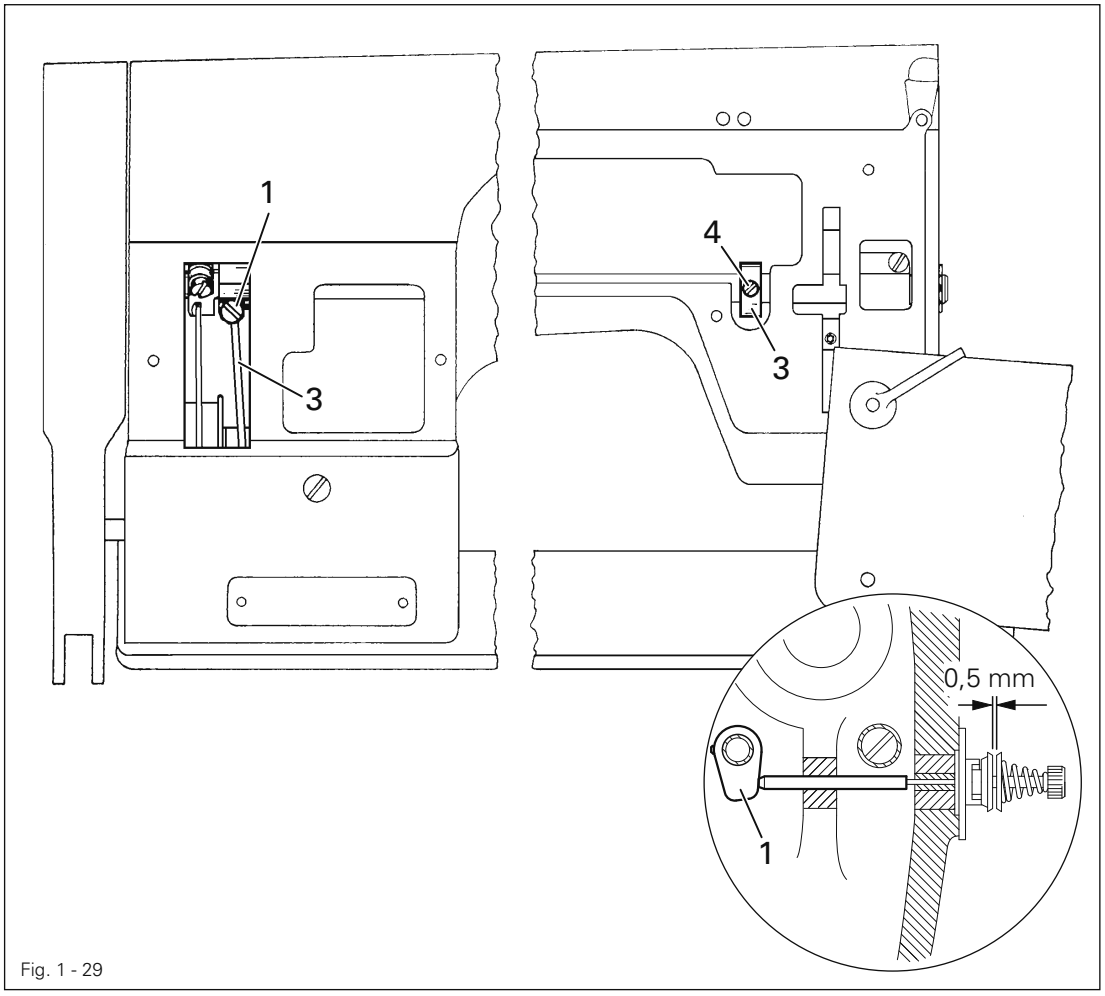

Fig. 1 - 29

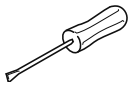

- Loosen screw **1** and press linkage rod **2** down as far as possible.
- Raise the presser foot.
- Adjust trip **3** (screw **4**) in accordance with the **requirement**.

1.05.30 Thread diverter pin

Requirement
With the needle bar at bdc the top edge of the thread guide hole must be at the same height as the bottom edge of the thread diverter.

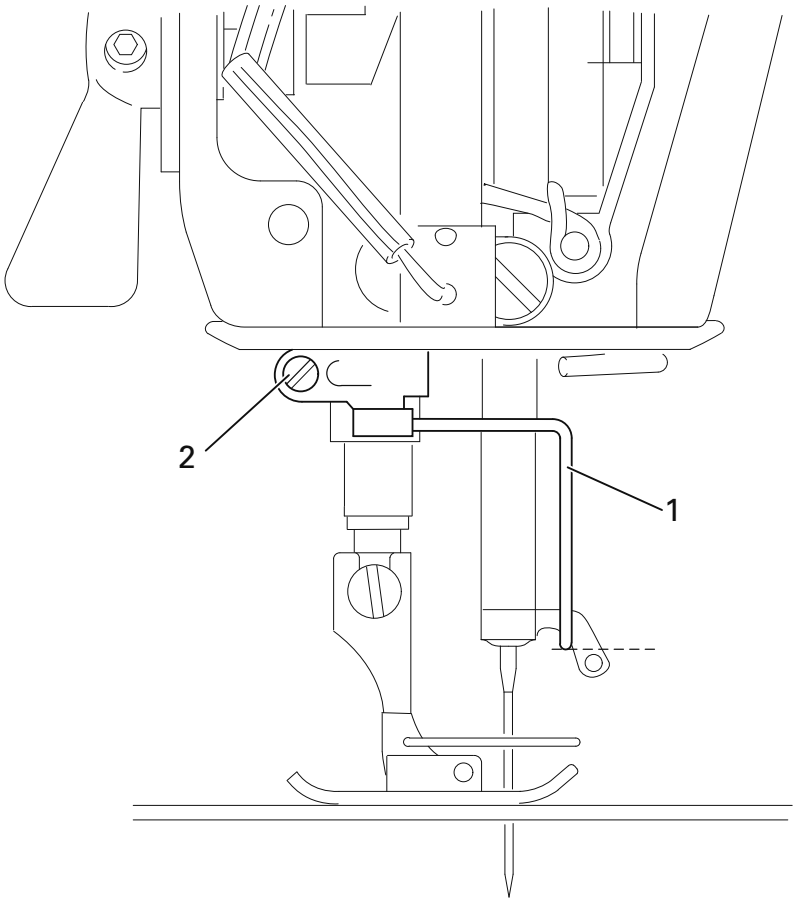

Fig. 1 - 30

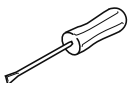

- Adjust thread guide bar **1** (screw **2**) according to the **requirement**, taking care that it is parallel to the bed-plate.

1.05.31 Limiting the knee lever stroke

Requirement
When the knee lever is pressed the hand lever must drop automatically and the presser foot must be just over **7 mm** above the needle plate.

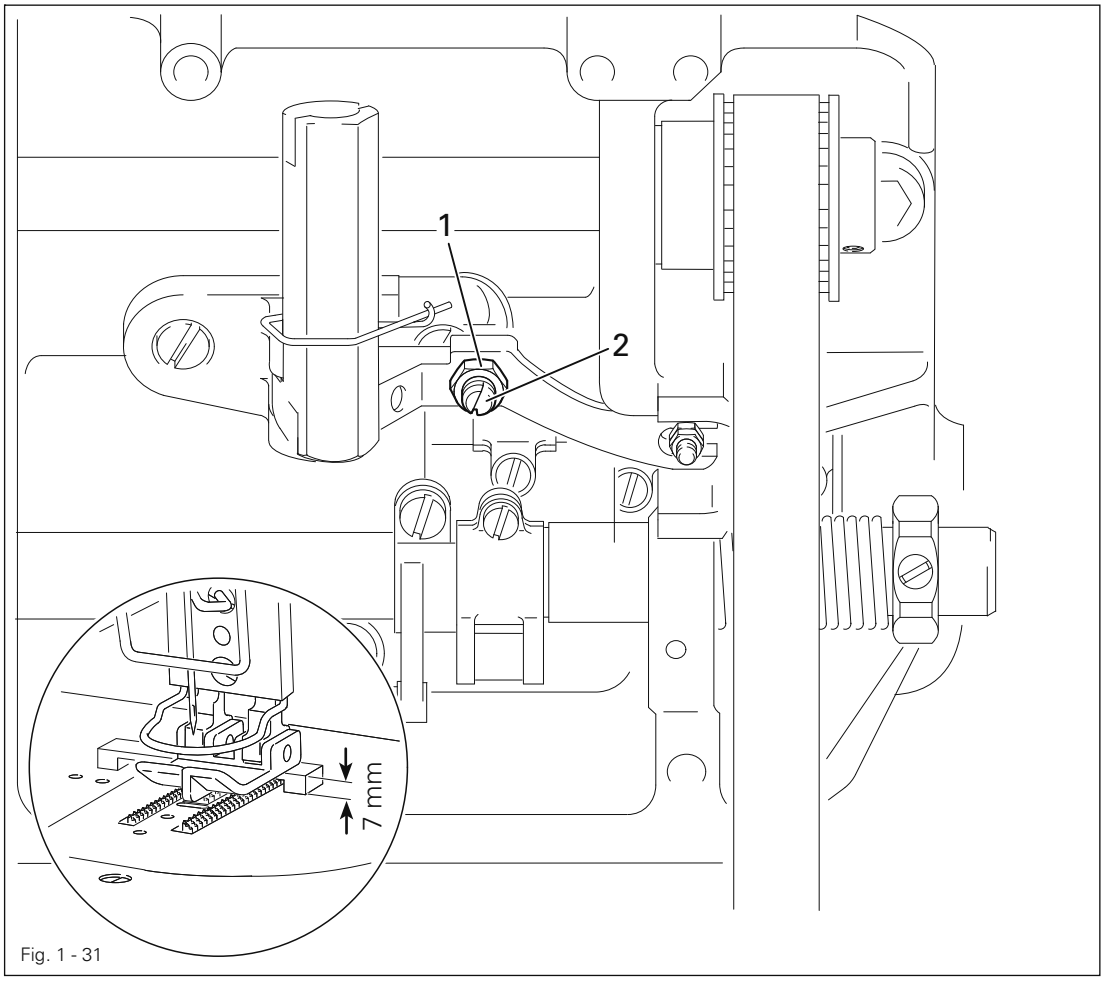

Fig. 1 - 31

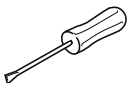

- Place the feed dog gauge under the presser foot with its recess facing downwards.
- Lower the presser foot onto the gauge.
- Loosen nut **1** and turn screw **2** out a few turns.
- Move the knee lever to the right until a noticeable resistance is felt, making sure that the presser foot is not lifted off the gauge, and hold it at this position.
- Turn screw **2** in as far as it will go, then back out by one turn, and lock it in place with nut **1.**

1.05.32 Knee lever play

Requirement
When lightly pressing the knee lever there should be a noticeable play between nut **1** and fork **3.**

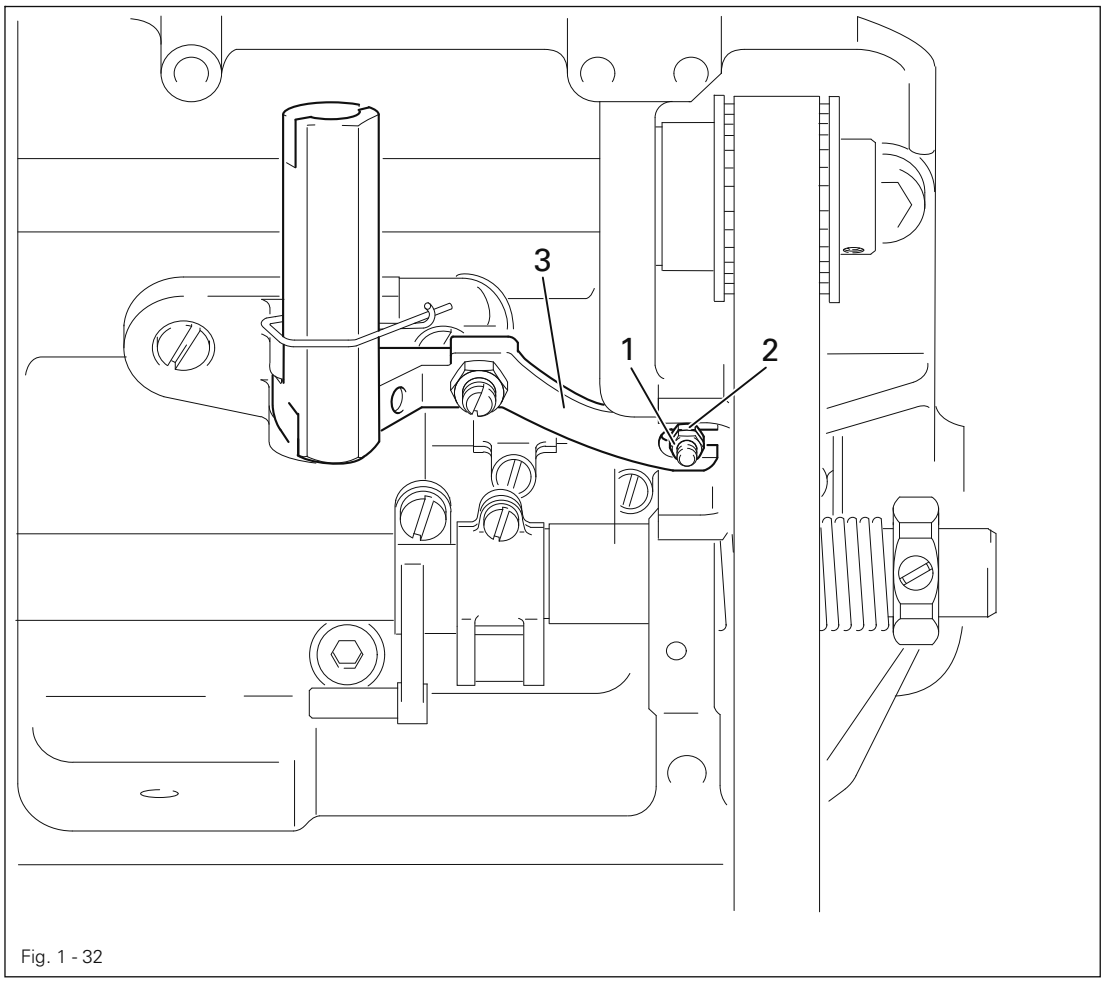

Fig. 1 - 32

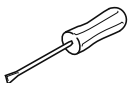

- Adjust nut **1** (nut **2**) in accordance with the **requirement** and lock it with nut **2.**

1.05.33 Bobbin winder

Requirement

1. With the bobbin winder engaged the bobbin winder spindle must be turned reliably, but friction wheel **3** must not touch drive wheel **1** when the bobbin winder is switched off.
2. The bobbin winder must disengage automatically when the thread is approx. **1 mm** from the edge of the bobbin.

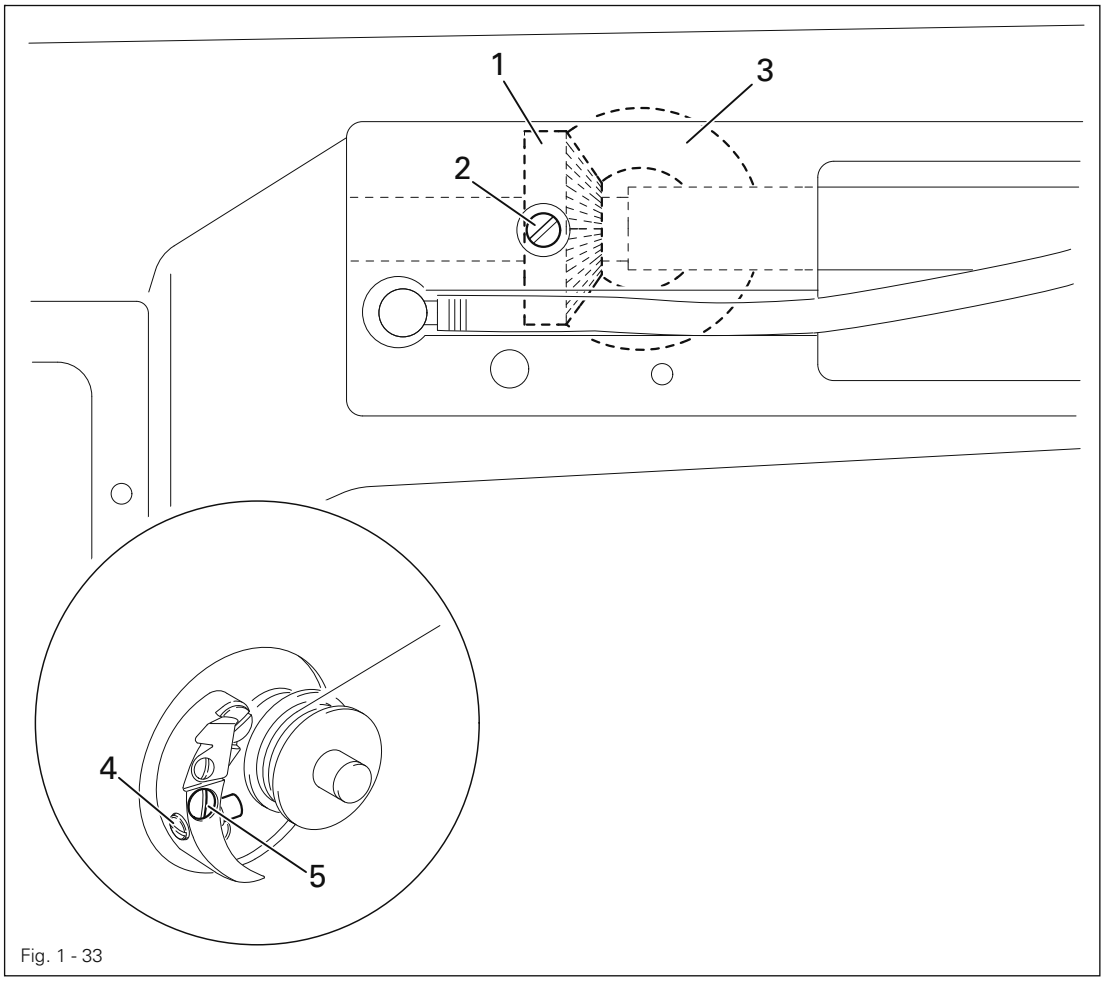

Fig. 1 - 33

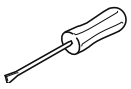

- Position drive wheel **1** in accordance with **requirement 1** and tighten screw **2.**
- Place a bobbin onto the bobbin winder, thread the bobbin and engage the bobbin winder
- Move regulating pin **3** in accordance with **requirement 2** and tighten screw **4.**

1.06 Adjusting the underedge trimmer -771//05

1.06.01 Resting position of the knife

Requirement
When adjustment lever **1** is set at "**0**", the knife stroke should be as small as possible.

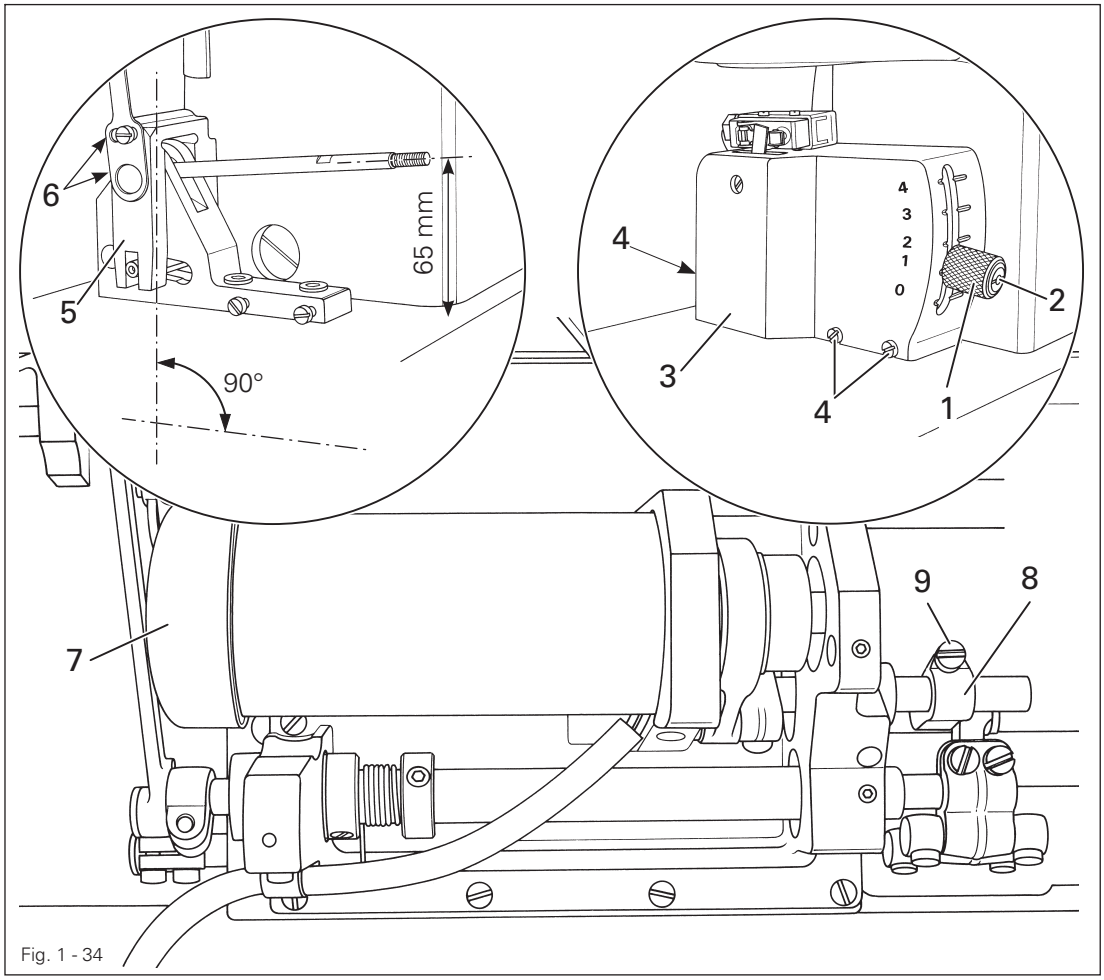

Fig. 1 - 34

- Unscrew the milled screw of adjustment lever **1** (screw **2**).
- Remove cover **3** (screws **4**).
- Place crank **5** (screws **6**) at right angles to the bed plate, and at the same time set a distance of **65 mm** between adjustment lever **1** and the bedplate.
- Screw cover **3** (screws **4**) back on.
- Set adjustment lever **1** at "**0**".
- Remove cover cap **7** and check the lifting motion of the knife by turning the motor impeller wheel (see **requirement**).
- Adjust crank **8** (screw **9**) in accordance with the **requirement**.

1.06.02 Knife height

Requirement
When the adjustment lever 1 is set at "0" and the knife is at the top of its stroke, the top edges of the needle plate and knife should be at the same level.

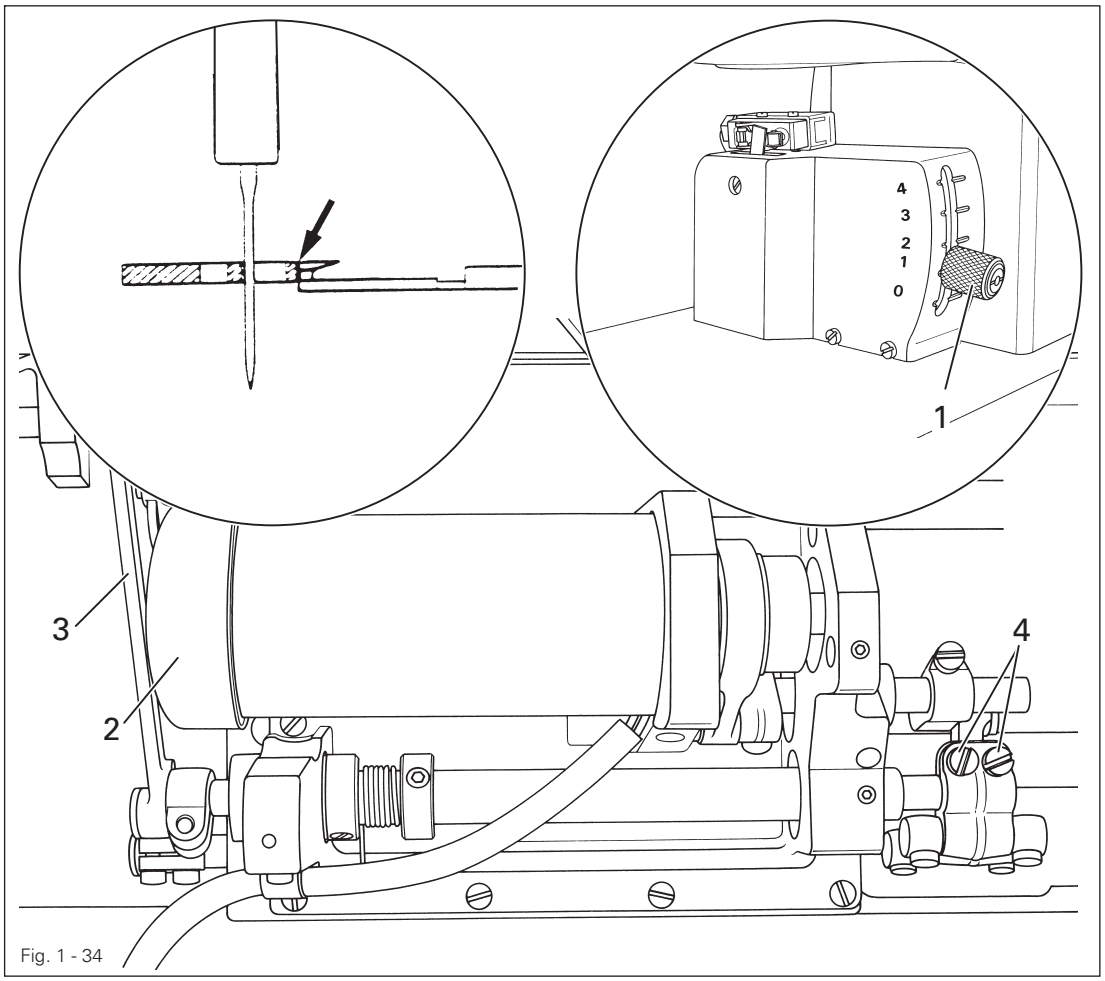

Fig. 1 - 34

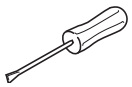

- Set adjustment lever **1** at "**0**".
- Remove cover cap **2** and turn the motor impeller wheel until the knife is positioned at its t.d.c.
- Adjust linkage rod **3** (screw **4**) in accordance with the **requirement**.

1.06.03 Positioning of the knife

Requirement
The knife should be touching the counter blade and be positioned at a slight slant to the stationary knife.

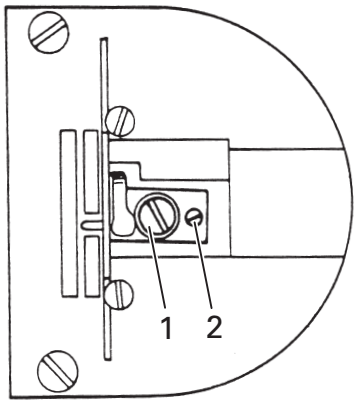

Fig. 1 - 35

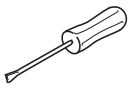

- Adjust eccentric **1** (screw **2**) in accordance with the **requirement**.

1.06.04 Knife drive switch

Requirement
When the adjustment lever **1** is set at "**0**", the knife drive unit must be switched off, and from position "**1**" on it must be switched on.

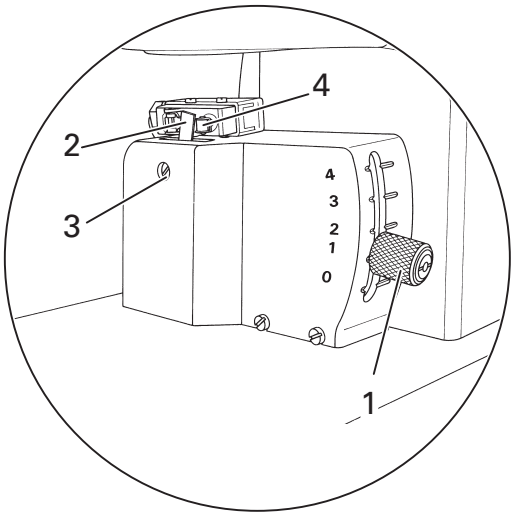

Fig. 1 - 36

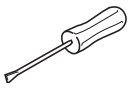

- Set adjustment lever **1** at "**0**".
- Turn lever **2** (screw **3**) until it pushes switch **4**.
- Set adjustment lever **1** at "**1**".
- Check the setting in accordance with the **requirement**, and adjust lever **2** if necessary.

1.06.04 Workpiece guard

Requirement
Workpiece guard **1** should be as close as possible to the knife **3** and be touching stop **4.**

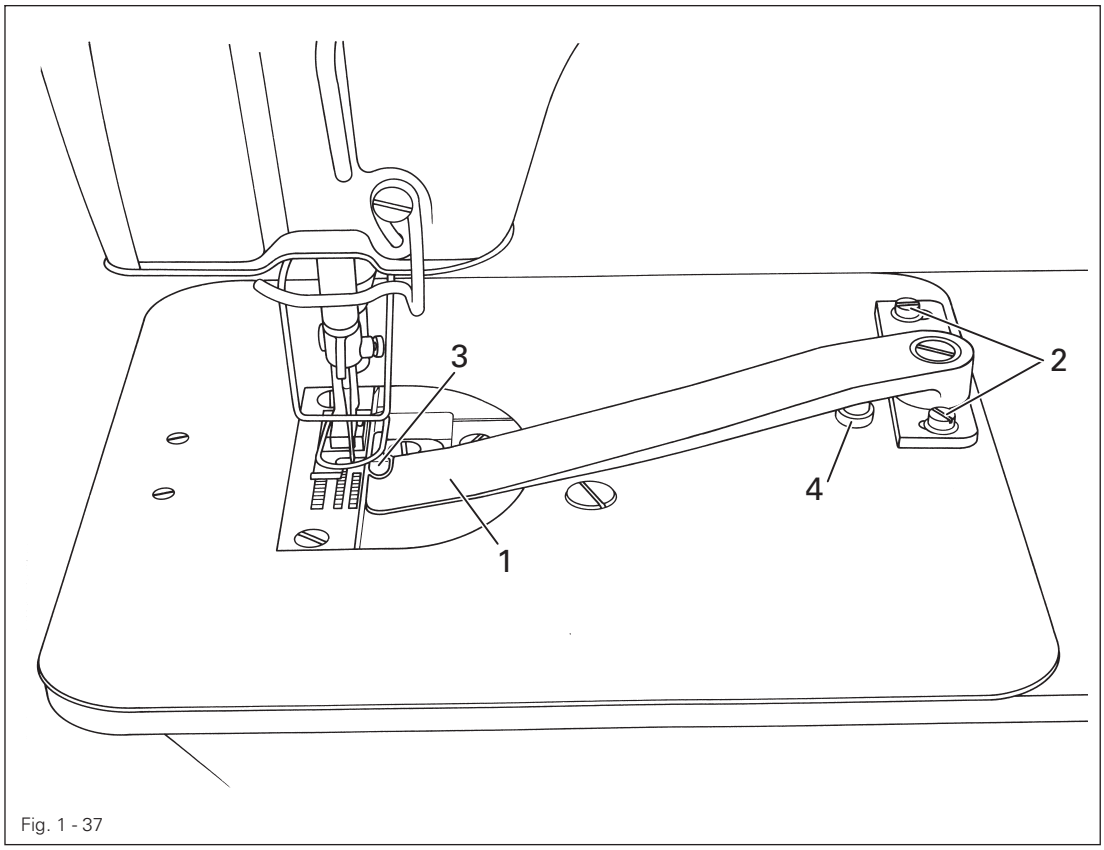

Fig. 1 - 37

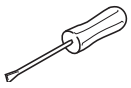

- Adjust workpiece guard **1** (screws **2)** in accordance with the **requirement**.

1.07 Adjusting the thread trimmer -900/24

1.07.01 Axial position of the control cam

Requirement

1. Roller **5** should be at a distance of **0.3 mm** from the control cam **1.**
2. Adjustment ring **3** should be touching the control cam **1.**

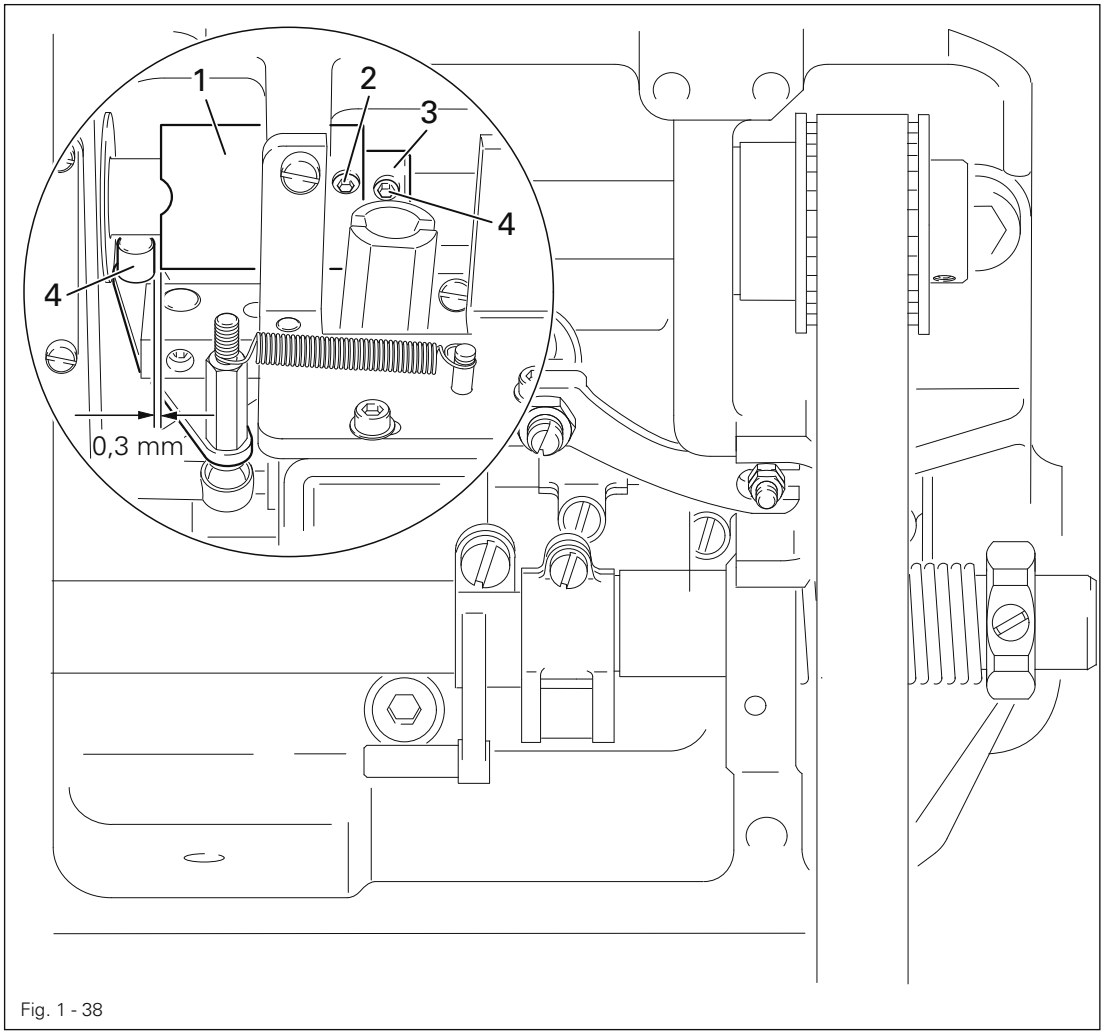

Fig. 1 - 38

- Shift control cam **1** (screw **2**) and adjustment ring **3** (screw **4**) in accordance with the **requirements**.

1.07.02 Preliminary adjustment of the control cam

Requirement

1. In the needle rise position (hole **1)** the roller lever **4** should lock into the corresponding groove of the control cam.
2. The control cam **1** should be touching adjustment ring **3.**

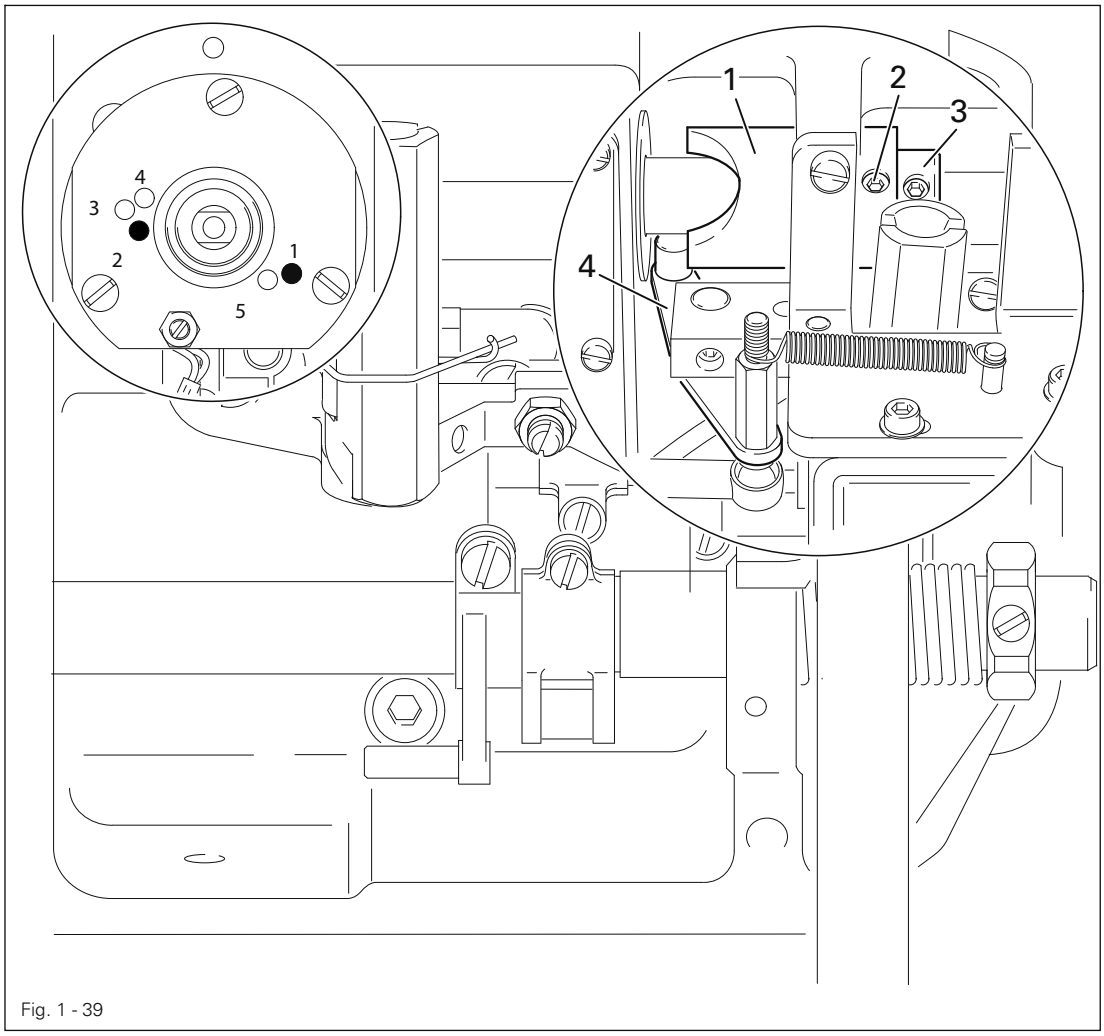

Fig. 1 - 39

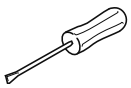

- Turn control cam **1** (screws **2)** in accordance with **requirement 1** and shift it in accordance with **requirement 2.**

1.07.03 Position of the thread catcher and cutting test

Requirement
When the thread trimmer is in its neutral position, the edge of thread catcher **6** should be flush with the edge of the mounting plate **4.**

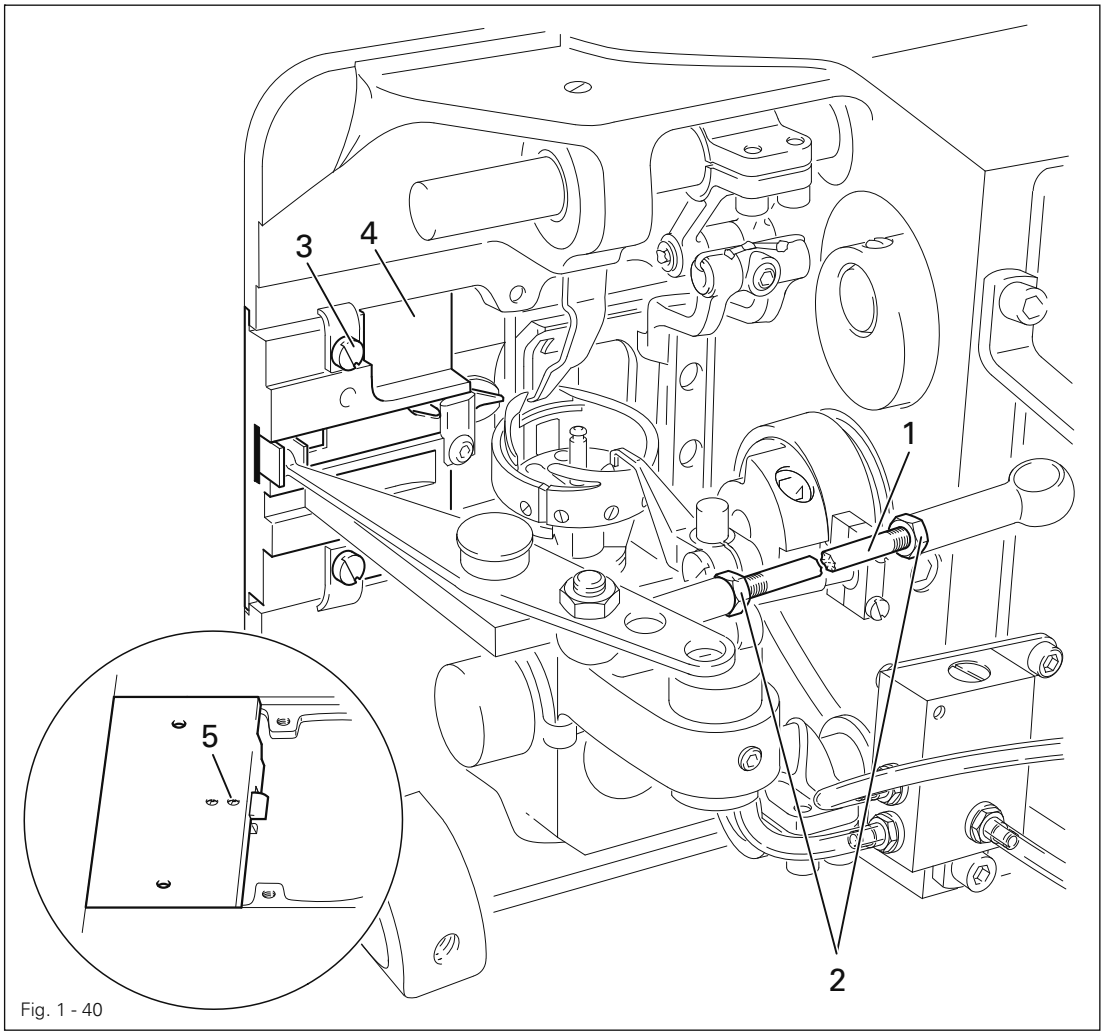

Fig. 1 - 40

- Turn linkage rod **1** (nuts **2,** left and right thread) in accordance with the **requirement**.
- During the cutting test, remove linkage rod **1,** loosen screws **3** and remove mounting plate **4.**
- Carry out the cutting test with double thread.
- By turning screw **5** adjust the cutting pressure.
- Fit mounting plate **4** so that its edge is flush with the edge of the bed-plate.
- Tighten screws **3** and replace linkage rod **1.**

1.07.04 Readjustment of the control cam

Requirement

1. When the end of the hook guard **3** is level with of the right edge of the bobbin case position finger **4,** the thread catcher **5** should begin moving forwards.
2. The control cam **1** should be touching adjustment ring **6.**

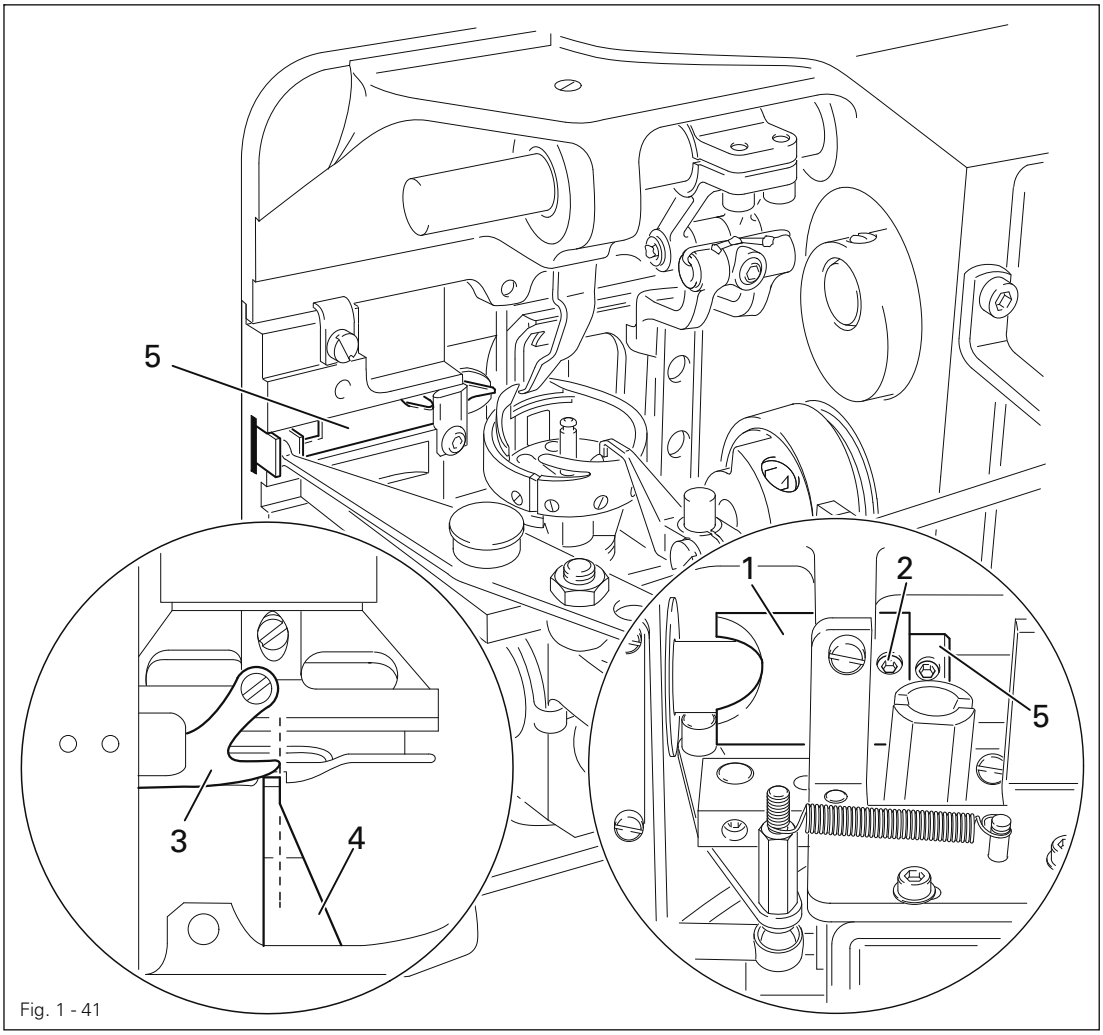

Fig. 1 - 41

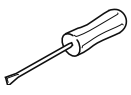

- Bring the needle bar to b.d.c.
- Turn control cam **1** (screws **2)** in accordance with **requirement 1** and shift it in accordance with **requirement 2.**

1.07.05 Needle thread tension release

Requirement

1. When solenoids **3** are activated, the tensions disks **4** should be at least **0.5 mm** apart.
2. When the thread trimmer is in its neutral position and the sewing foot is positioned on the needle plate, the tension should be fully effective.

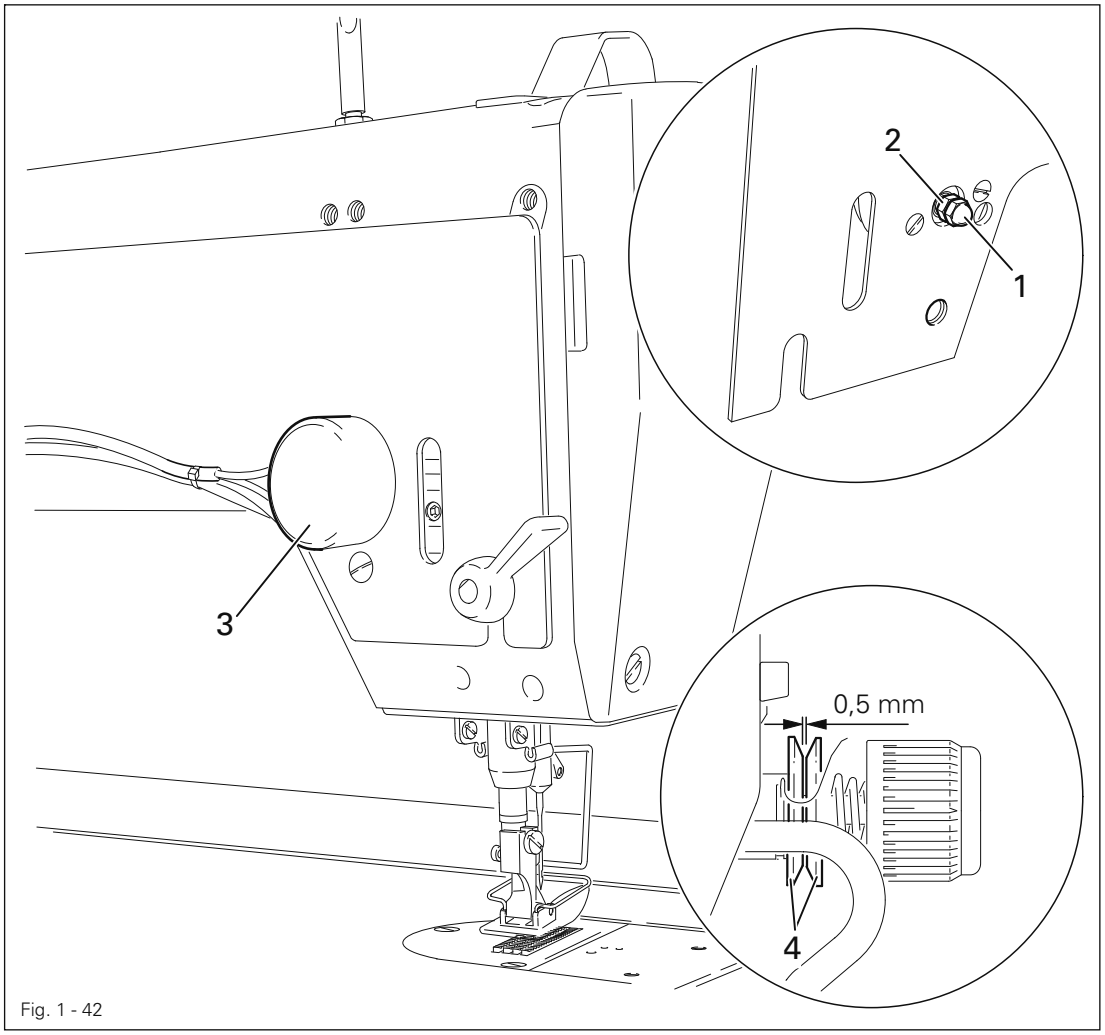

Fig. 1 - 42

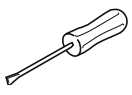

- Unscrew the thread wiper.
- Turn nut **1** (nut **2)** in accordance with the **requirement**s.
- Screw thread wiper back into place.

2 Circuit diagrams

Reference list for circuit diagrams 91-191 469-95

A1	Controller P40 ED
A2	Control panel S3
A14	Sewing head identification (OTE)
B1	Initiator zig-zag stitch control
H1	Sewing lamp
H10	LED Stitch counter
M1	Sewing motor
M2	-771/05 knife motor (optional)
Q1	Main switch
S1	Pedal set value transmitter
S6	Start inhibitor key
S12	Key for -771/05 knife motor (optional)
S41	Manual backtacking
S42	Needle position change key
S43	Single stitch key
X0	RS232 interface (PC)
X1	Motor
X2	Incremental transmitter
X3	Set value transmitter
X4	Control panel S3
X5	Inputs/outputs
X6	Bobbin thread (optional)
X7	Light barrier (optional)
X12	-771/05 S12 Key for knife motor (optional)
X21	-771/05 M2 knife motor (optional)
X22	-900/.. thread trimmer (FS)
X23	-909/03 thread wiper
X24	-910/.. automatic presser foot lift
X25.1	-911/.. backtacking device
X25.2	-918/18 zig-zag switch
X28	Thread tension release (FSL)
X40	Keyboard
X46	Start inhibitor
X50	Sewing head identification (OTE)
Y2	-900/.. thread trimmer
Y3	-909/03 thread wiper
Y4	-910/.. automatic presser foot lift
Y5.1	-911/.. backtacking device
Y5.2	-918/18 zig-zag switch
Y8	Thread tension release (FSL)

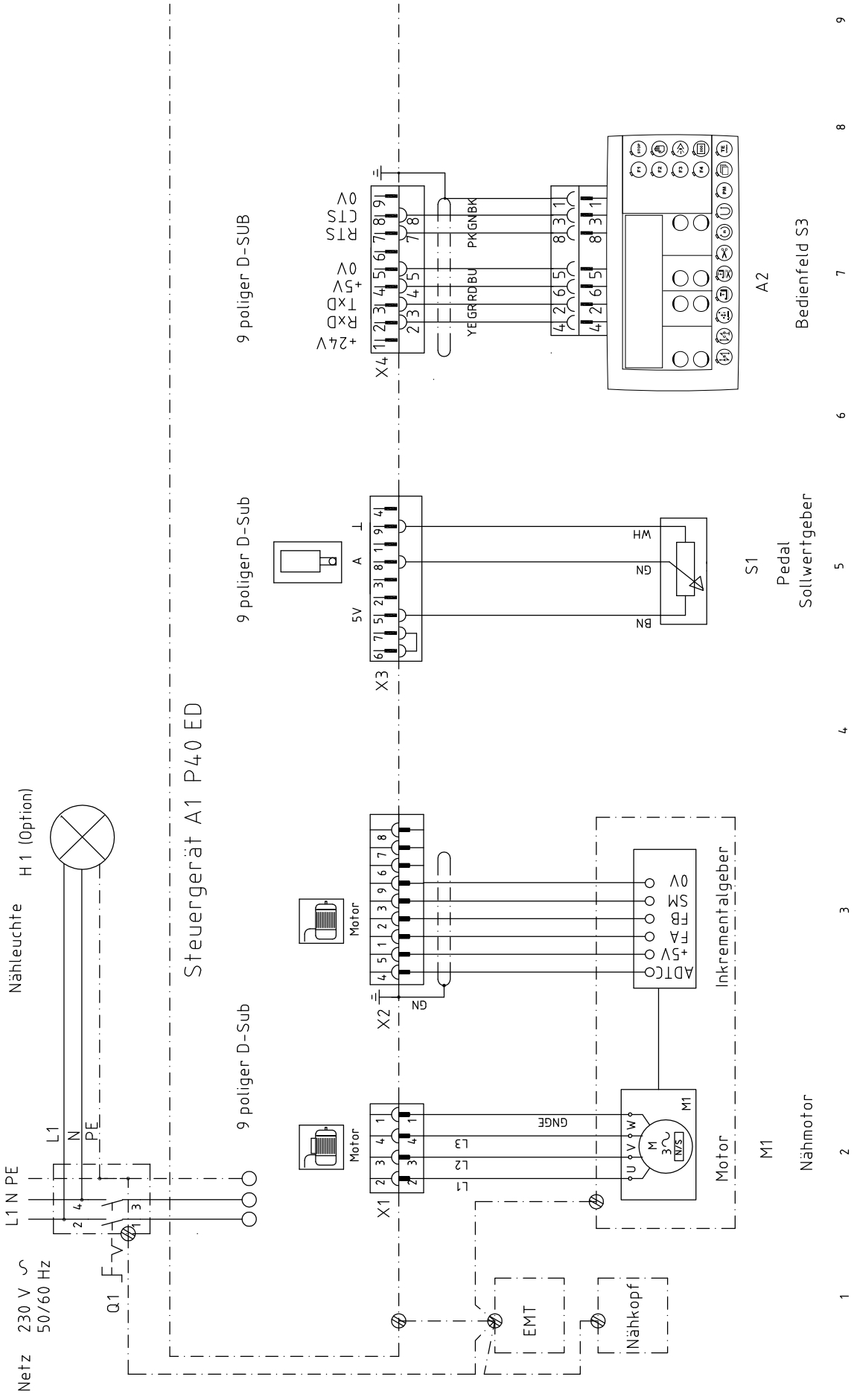
Netz 230 V ~ 50/60 Hz
L1 N PE
Q1
Nähleuchte
H 1 (Option)
L1
N
PE
Steuergerät A1 P40 ED
9 poliger D-Sub
X1
X2
X3
X4
Motor
L1
L2
L3
GNGE
GN
5V
A
⊥
WH
GN
BN
+24V
RxD
TxD
+5V
0V
RTS
CTS
0V
YE GR RD BU
PK GN BK
A2
Bedienfeld S3
S1
Pedal
Sollwertgeber
ADTC
+5V
FA
FB
SM
0V
Inkrementalgeber
M1
Nähmotor
EMT
Nähkopf
1
2
3
4
5
6
7
8
9

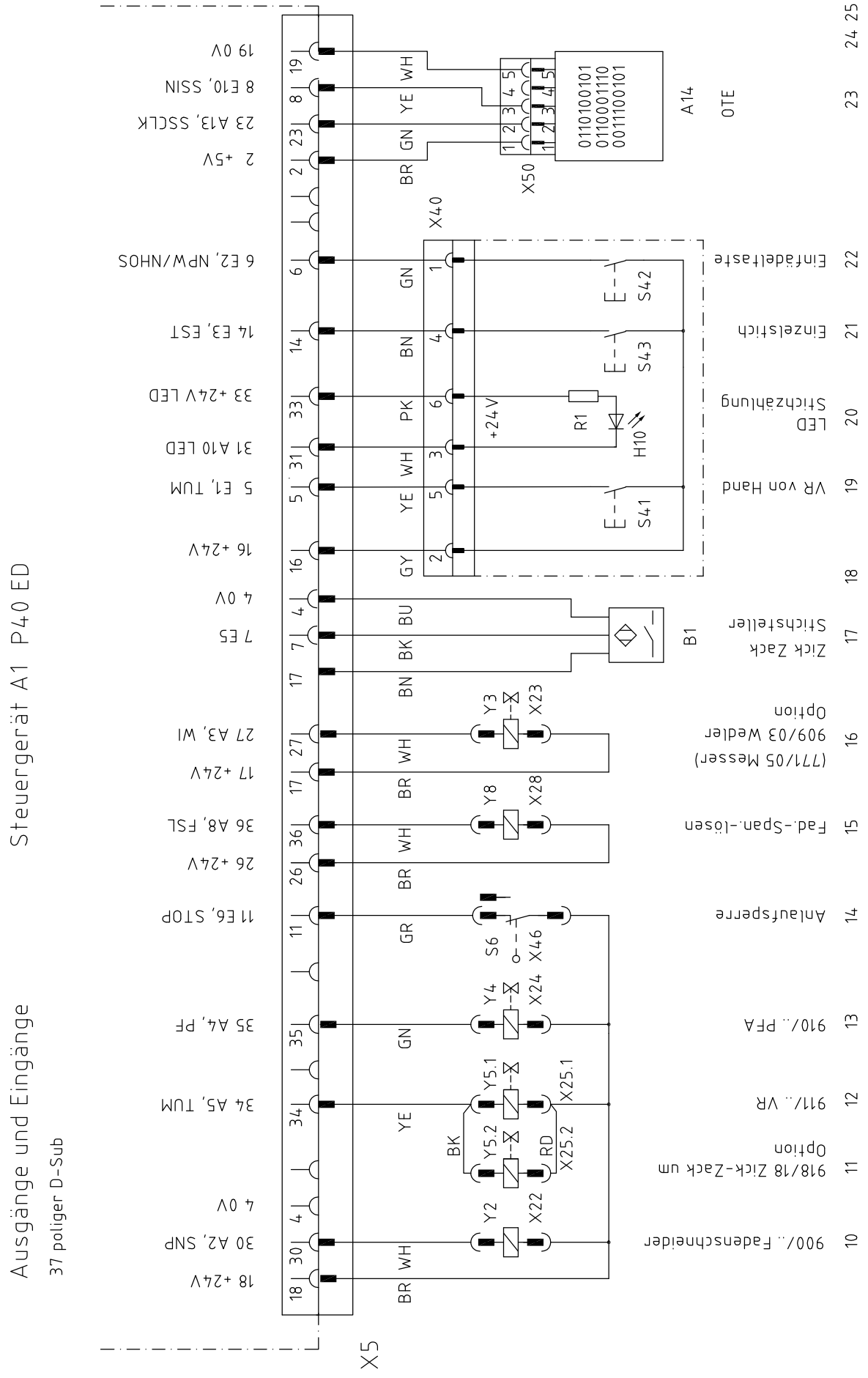
Steuergerät A1 P40 ED
Ausgänge und Eingänge
37 poliger D-Sub
X5
18 +24V
30 A2, SNP
4 0V
34 A5, TUM
35 A4, PF
11 E6, STOP
26 +24V
36 A8, FSL
17 +24V
27 A3, WI
7 E5
4 0V
16 +24V
5 E1, TUM
31 A10 LED
33 +24V LED
14 E3, EST
6 E2, NPW/NHOS
2 +5V
23 A13, SSCLK
8 E10, SSIN
19 0V
X40
X50
A14
OTE
B1
S41
S42
S43
S6
R1
H10
+24V
Y2
Y4
Y5.1
Y5.2
Y8
Y3
X22
X24
X25.1
X25.2
X28
X23
X46
910/.. PFA
911/.. VR
918/18 Zick-Zack um
Option
900/.. Fadenschneider
Anlaufsperre
Fad.-Span.-lösen
909/03 Weiler
(771/05 Messer)
Option
Stichsteller
Zick Zack
VR von Hand
LED
Stichzählung
Einzelstich
Einfädeltaste

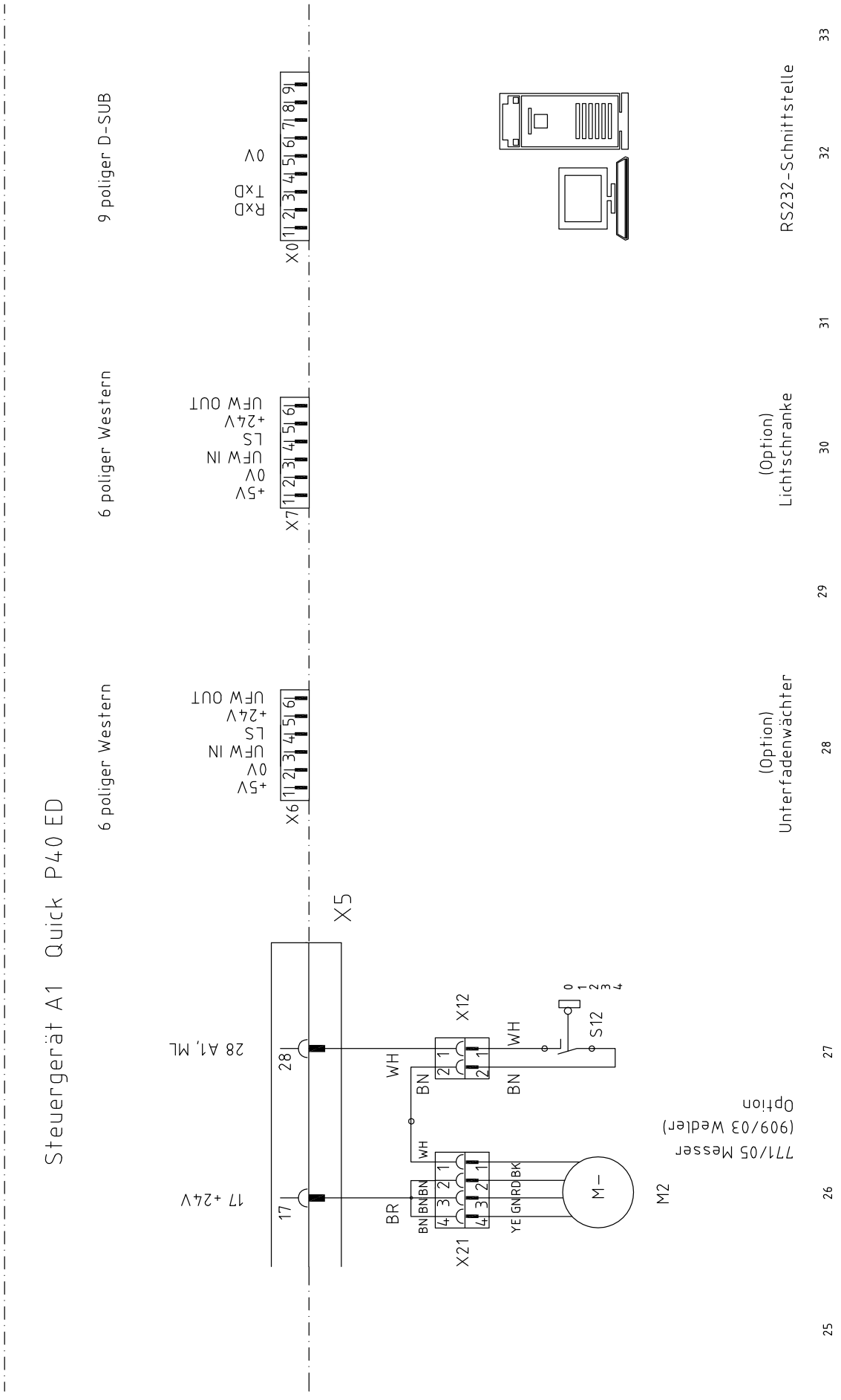
Steuergerät A1 Quick P40 ED
6 poliger Western
6 poliger Western
9 poliger D-SUB
X6
X7
X0
+5V
0V
UFW IN
LS
+24V
UFW OUT
RxD
TxD
0V
X5
28 A1, ML
17 +24V
28
17
X12
X21
WH
BN
BR
S12
M-
M2
YE GN RD BK
(Option)
Unterfadenwächter
(Option)
Lichtschranke
RS232-Schnittstelle
771/05 Messer
(909/03 Wedler)
Option
25
26
27
28
29
30
31
32
33

PFAFF® Industrial



Europäische Union
Wachstum durch Innovation – EFRE



PFAFF Industriesysteme
und Maschinen AG

Hans-Geiger-Str. 12 - IG Nord
D-67661 Kaiserslautern

Phone: +49-6301 3205 - 0
Fax: +49-6301 3205 1386
E-mail: info@pfaff-industrial.com

Hotlines:
Technical service: +49-175/2243-101
Application consultance: +49-175/2243-102
Spare-parts hotline: +49-175/2243-103

Printed in Germany

© PFAFF Industriesysteme und Maschinen AG 2009, PFAFF is the exclusive trademark of VSM Group AB.PFAFF Industriesysteme und Maschinen AG is an authorized licensee of the PFAFF trademark.