PFAFF® Industrial

918 U
938 U

INSTRUCTION MANUAL

This instruction manual applies to machines from the following serial numbers onwards:
2 671 899 →

296-12-18 759/002
Betriebsanleitung engl. 06.09



This Instruction Manual is valid for all models and subclasses listed in the chapter "Specifications ".

The reprinting, copying or translation of PFAFF Instruction Manuals, whether in whole or in part, is only permitted with our previous authorization and with written reference to the source.

PFAFF Industriesysteme
und Maschinen AG

Hans-Geiger-Str. 12 - IG Nord
D-67661 Kaiserslautern

Contents ..... Chapter – Page

1	Safety	1 - 1
1.01	Regulations	1 - 1
1.02	General notes on safety	1 - 1
1.03	Safety symbols	1 - 2
1.04	Important notes for the user	1 - 2
1.05	Notes for operating and technical staff	1 - 3
1.05.01	Operating staff	1 - 3
1.05.02	Technical staff	1 - 3
1.06	Danger	1 - 4
2	Proper use	2 - 1
3	Specifications	3 - 1
4	Disposal of Machine	4 - 1
5	Transportation, packing and storage	5 - 1
5.01	Transportation to customer's premises	5 - 1
5.02	Transportation inside the customer's premises	5 - 1
5.03	Disposal of packing materials	5 - 1
5.04	Storage	5 - 1
6	Explanation of symbols	6 - 1
7	Controls	7 - 1
7.01	Main switch	7 - 1
7.02	Keys on the machine head	7 - 1
7.03	Pedal	7 - 2
7.04	Lever for raising presser foot	7 - 2
7.05	Adjustment lever for zigzag stitch and needle position	7 - 3
7.06	Reverse-feed key	7 - 3
7.07	Stitch length adjustment wheel	7 - 4
7.08	Adjustment wheel for multi-stitch and zigzag stitch	7 - 4
7.09	Control panel	7 - 5
7.09.01	Screen displays	7 - 5
7.09.02	Function keys	7 - 5
8	Installation and commissioning	8 - 1
8.01	Installation	8 - 1
8.01.01	Adjusting the table height	8 - 1
8.01.02	Mounting the upper V-belt guard / Fitting the machine cover	8 - 2
8.01.03	Fitting the reel stand	8 - 2
8.02	Fitting the Quick-flange motor.	8 - 3
8.03	Fit the belt guard of the Quick flange-motor.	8 - 3
8.04	Connect the plug-type connections and earth cable of the Quick-flange motor.	8 - 4

Contents .....Chapter – Page

8.05 Commissioning ..... 8 - 5
8.06 Switching the machine on/off ..... 8 - 5
8.07 Basic setting of the machine drive unit (only on machines with Quick-flange motor) ... 8 - 6
8.08 Mounting/connecting the start inhibitor (only on machines with Quick-flange motor) ... 8 - 8

9 Setting up ..... 9 - 1
9.01 Inserting the needle ..... 9 - 1
9.02 Winding the bobbin thread; adjusting the primary thread tension ..... 9 - 2
9.03 Removing/inserting the bobbin case ..... 9 - 3
9.04 Threading the bobbin case, adjusting the thread tension ..... 9 - 3
9.04.01 PFAFF 938 U without thread trimmer ..... 9 - 3
9.04.02 PFAFF 938 U with thread trimmer ..... 9 - 4
9.04.03 PFAFF 918 U ..... 9 - 4
9.05 Threading the needle thread / Adjusting the needle thread tension ..... 9 - 5
9.06 Setting the zigzag stitch and the stitch position ..... 9 - 6
9.07 Adjusting the stitch length ..... 9 - 6
9.08 Adjusting the multi-stitch or the zigzag stitch
(only on machines with Quick-flange motor) ..... 9 - 7
9.08.01 Changing from zigzag stitch to multi-stitch ..... 9 - 7
9.08.02 Changing from multi-stitch to zigzag stitch ..... 9 - 7
9.09 Adjusting the multi-stitch or the zigzag stitch (on machines with an external motor) ..... 9 - 8
9.09.01 Changing from zigzag stitch to multi-stitch ..... 9 - 8
9.09.02 Changing from multi-stitch to zigzag stitch ..... 9 - 8
9.10 Entering the start and end backtacks ..... 9 - 9

10 Sewing ..... 10 - 1
10.01 Darning program ..... 10 - 2
10.02 Counted seam ..... 10 - 2
10.03 Error messages ..... 10 - 3

11 Care and maintenance ..... 11 - 1
11.01 Cleaning ..... 11 - 1
11.02 Lubricating the hook ..... 11 - 2
11.03 Oiling the zigzag drive ..... 11 - 3
11.04 Cleaning the air filter of the air-filter / lubricator ..... 11 - 4
11.05 Checking/adjusting the air pressure ..... 11 - 4

12 Adjustment ..... 12 - 1
12.01 Notes on adjustment ..... 12 - 1
12.02 Tools, gauges and other accessories for adjusting ..... 12 - 1
12.03 Abbreviations ..... 12 - 1
12.04 Check and adjustment aid ..... 12 - 2
12.05 Adjusting the basic machine ..... 12 - 3
12.05.01 Balancing weight ..... 12 - 3
12.05.02 Centering the needle in the needle hole (in sewing direction) ..... 12 - 4

Contents .....Chapter – Page

12.05.03	Parallel guiding of the needle bar	12 - 5
12.05.04	Locking lever	12 - 6
12.05.05	Zero stitch and zigzag stitch scale	12 - 7
12.05.06	Centering the needle in the needle hole (crosswise to sewing direction)	12 - 8
12.05.07	Zigzag stitch width	12 - 9
12.05.08	Multi-stitch movement	12 - 10
12.05.09	Zigzag movement	12 - 11
12.05.10	Target positioning sensor	12 - 12
12.05.11	Needle position adjustment lever	12 - 13
12.05.12	Zero position of the bottom feed dog (with closed gear box)	12 - 14
12.05.13	Zeroing the bottom feed (with open gearbox)	12 - 15
12.05.14	Feeding motion of the bottom feed dog	12 - 16
12.05.15	Lifting motion of the bottom feed dog	12 - 17
12.05.16	Drive belt in the gearbox housing	12 - 18
12.05.17	Hook bearing bracket	12 - 19
12.05.18	Hook lubrication	12 - 20
12.05.19	Pre-adjusting the needle height	12 - 21
12.05.20	Needle rise, hook-to-needle clearance and bobbin case positioning-finger	12 - 22
12.05.21	Final adjustment of the needle height	12 - 23
12.05.22	Bobbin case opener position	12 - 24
12.05.23	Bobbin case opener motion	12 - 25
12.05.24	Bottom feed dog height	12 - 26
12.05.25	Presser foot to needle plate clearance	12 - 27
12.05.26	Presser foot pressure	12 - 28
12.05.27	Thread diverter pin	12 - 29
12.05.28	Limiting the knee lever stroke	12 - 30
12.05.29	Knee lever play	12 - 31
12.05.30	Bobbin winder	12 - 32
12.06	Adjusting the thread trimmer	12 - 33
12.06.01	Axial position of the control cam	12 - 33
12.06.02	Preliminary adjustment of the control cam	12 - 34
12.06.03	Position of the thread catcher and cutting test	12 - 35
12.06.04	Readjustment of the control cam	12 - 36
12.06.05	Needle thread tension release	12 - 37
12.07	Parameter settings	12 - 38
12.07.01	Selecting the user level	12 - 38
12.07.02	Example of a parameter input	12 - 39
12.07.03	List of parameters	12 - 40
12.08	Reset / Cold start	12 - 41
12.09	Explanation of the error signals	12 - 42
12.10	Internet update of the machine software	12 - 43
13	Wearing parts	13 - 1
14	Circuit diagrams	14 - 1

1 Safety

1.01 Regulations

This machine is constructed in accordance with the European regulations indicated in the conformity and manufacturer's declarations.
In addition to this instruction manual, please also observe all generally accepted, statutory and other legal requirements, including those of the user's country, and the applicable pollution control regulations!
The valid regulations of the regional social insurance society for occupational accidents or other supervisory authorities are to be strictly adhered to!

1.02 General notes on safety

- The machine must only be operated by adequately trained operators and only when the instruction manual has been fully read and understood!
- All notices on safety and the instruction manual of the motor manufacturer are to be read before the machine is put into operation!
- All notes on the machine concerning danger and safety must be observed!
- The machine must be used for the purpose for which it is intended and must not be operated without its safety devices; all regulations relevant to safety must be adhered to.
- When part sets are changed (e.g. needle, presser foot, needle plate, feed dog or bob-bin), during threading, when the workplace is left unattended and during maintenance work, the machine must be isolated from the power supply by turning off the on/off switch or removing the plug from the mains!
- Daily maintenance work must only be carried out by appropriately trained persons!
- Repairs and special maintenance work must only be carried out by qualified technical staff or persons with appropriate training!
- During maintenance or repairs on the pneumatic system the machine must be isolated from the compressed air supply! The only exception to this is when adjustments or function checks are carried out by appropriately trained technical staff!
- Work on the electrical equipment must only be carried out by technical staff who are qualified to do so!
- Work on parts or equipment connected to the power supply is not permitted! The only exceptions to this are specified in regulations EN 50110.
- Conversion or modification of the machine must only be carried out under observation of all relevant safety regulations!

- Only spare parts which have been approved by us are to be used for repairs! We draw special attention to the fact that spare parts and accessories not supplied by us have not been subjected to testing nor approval by us. Fitting and/or use of any such parts may cause negative changes to the design characteristics of the machine. We shall not ac-cept any liability for damage caused by the use of non-original parts.

1.03 Safety symbols



Danger!
Special points to observe.



Danger of injury to operating or technical staff!



Electric voltage!
Danger to operating or technical staff!



Caution

Do not operate without finger guard and safety devices.
Before threading, changing bobbin and needle, cleaning etc. switch off main switch.

1.04 Important notes for the user

- This instruction manual belongs to the equipment of the machine and must be available to the operating staff at all times.
  This instruction manual must be read before the machine is operated for the first time.
- Both operating and technical staff must be instructed on the safety devices of the machine and on safe working methods.
- It is the duty of the user to operate the machine in perfect running order only.
- The user must ensure that none of the safety devices are removed nor put out of work-ing order.
- The user must ensure that only authorized persons operate and work on the machine.

For further information please refer to your PFAFF agency.

1.05 Notes for operating and technical staff

1.05.01 Operating staff

Operating staff are the persons responsible for setting up, operating and cleaning the machine and for eliminating any malfunctioning in the sewing area.

The operating staff is obliged to observe the following points:

- The notes on safety in this instruction manual must always be observed!
- Any working methods, which adversely affect the safety of the machine, must be avoided.!
- Loose-fitting clothing should be avoided. No jewellery, such as chains and rings, should be worn!
- Ensure that only authorised persons enter the danger area of the machine!
- Any changes occurring on the machine, which may affect its safety, must be reported to the user immediately.

1.05.02 Technical staff

Technical staff are persons who have been trained in electrical engineering/electronics and mechanical engineering. They are responsible for lubricating, servicing, repairing and adjusting the machine.

The technical staff is obliged to observe the following points:

- The notes on safety in this instruction manual must always be observed!
- Before carrying out any adjustment or repair work the main switch must be switched off and measures taken to prevent it from being switched on again!
- Never work on parts or equipment still connected to the power supply! Exceptions are only permissible in accordance with the regulations EN 50110.
- All safety covers must be replaced after the completion of maintenance or repair work!

1.06 Danger

A working area of 1 meter is to be kept free both in front of and behind the machine while it is in operation so that it is always easily accessible.

Never reach into the sewing area while sewing! Danger of injury by the needle!

Never leave objects on the table while adjusting the machine settings!
Objects can become trapped or be slung away! Danger of injury!

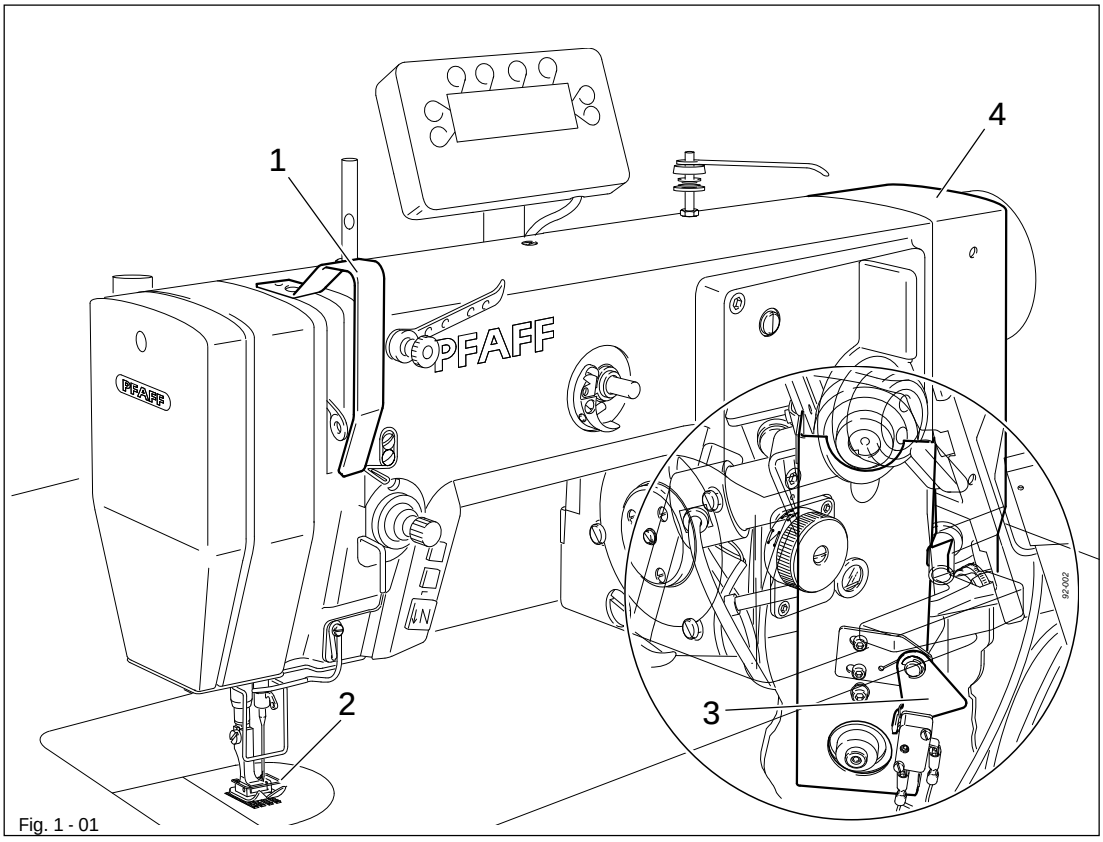

Fig. 1 - 01

Do not operate the machine without the take-up lever guard 1!
Danger of injury through the movement of the take-up lever.

Do not operate the machine without finger guard 2!
Danger of injury from the needle!

Do not operate machines with Quick-flange motor without start inhibitor 3!
Danger of injury if the machine is started accidentally!

When using an external motor do not operate the machine without belt guard 4!
Danger of injury from the drive belts!

2 Proper use

The PFAFF 918 U is a high-speed zigzag sewing machine with bottom feed, a large hook and mechanical shift from zigzag to 3-stitch zigzag.
The PFAFF 938 U is a high-speed zigzag sewing machine with bottom feed and mechanical shift from zigzag to 3-stitch zigzag.

The machines are used for producing zigzag lockstitch seams in the clothing and linen industry.



Any use of these machines which is not approved by the manufacturer shall be considered as improper use! The manufacturer shall not be liable for any damage arising out of improper use! Proper use shall also be considered to include compliance with the operation, adjustment, service and repair measures specified by the manufacturer!

3 Specifications ▲

Stitch type: ..... 304 (zigzag lockstitch)
Needle system: 438

Needle size in 1/100 mm:
Model A: ..... 60 - 70
Model B: ..... 80 - 100

Effective balance wheel diameter: ..... 65 mm
Presser foot clearance: ..... 7 mm
Clearance width: ..... 260 mm
Clearance height: ..... 130 mm

Bedplate dimensions: ..... 476 x 177 mm

Sewing head dimensions:
Length: ..... ca. 550 mm
Width: ..... ca. 180 mm
Height (above table): ..... ca. 300 mm

Max. stitch length: ..... 4,5 mm

Max. speed:
With 33 mm needle bar stroke: ..... 4500 spm ◆

Connection data:
Operating voltage: ..... 230 V ± 10%, 50/60 Hz
Max. power ..... 1,2 kVA
Fuse protection: ..... 1 x 16 A, inert

Noise data:
Noise emission level at workplace with a sewing speed of 3600 spm: .. L_{pA} < 78,5 dB(A) ■
(Noise measurement in accordance with DIN 45 635-48-A-1, ISO 11204, ISO 3744, ISO 4871)

Net weight of sewing head: ..... ca. 46 kg
Gross weight of sewing head: ..... ca. 54 kg

▲ Subject to alterations

◆ Depending on the stitch length, the maximum speed is reduced automatically within the max. pre-set value.

■ K_{pa} = 2.5 dB

4 Disposal of Machine

- Proper disposal of the machine is the responsibility of the customer.
- The materials used for the machine are steel, aluminium, brass and various plastic materials.
  The electrical equipment comprises plastic materials and copper.
- The machine is to be disposed of according to the locally valid pollution control regulations; if necessary, a specialist ist to be commissioned.



Care must be taken that parts soiled with lubricants are disposed of separately according to the locally valid pollution control regulations!

5 Transportation, packing and storage

5.01 Transportation to customer's premises

The machines are delivered completely packed.

5.02 Transportation inside the customer's premises

The manufacturer cannot be made liable for transportation inside the customer's premises nor to other operating locations. It must be ensured that the machines are only transported in an upright position.

5.03 Disposal of packing materials

The packing materials of this machine comprise paper, cardboard and VCE fibre. Proper disposal of the packing material is the responsibility of the customer.

5.04 Storage

If the machine is not in use, it can be stored as it is for a period of up to six months, but It should be protected against dust and moisture.
If the machine is stored for longer periods, the individual parts, especially the surfaces of moving parts, must be protected against corrosion, e.g. by a film of oil.

6 Explanation of symbols

In this instruction manual, work to be carried out or important information is accentuated by symbols. These symbols have the following meanings:



Note, information



Cleaning, care



Lubrication

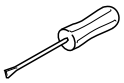

Maintenance, repairs, adjustment, service work
(only to be carried out by technical staff)

7 Controls

7.01 Main switch

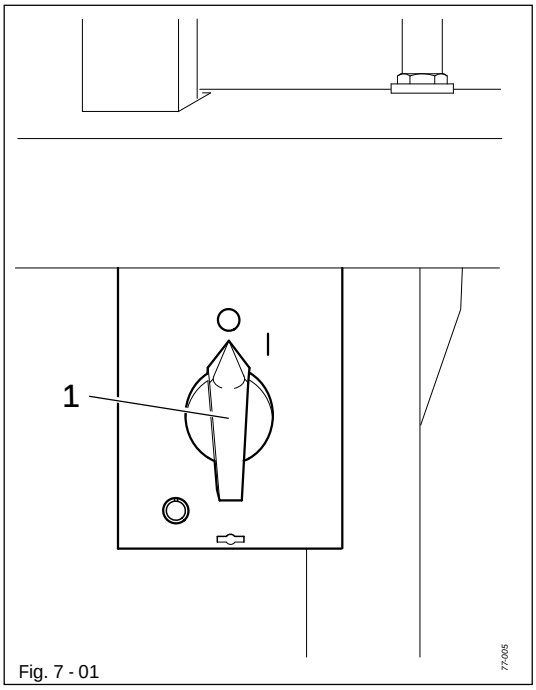

Fig. 7 - 01

- The machine is switched on or off by turning the main switch 1.

7.02 Keys on the machine head (only on machines with Quick-flange motor)

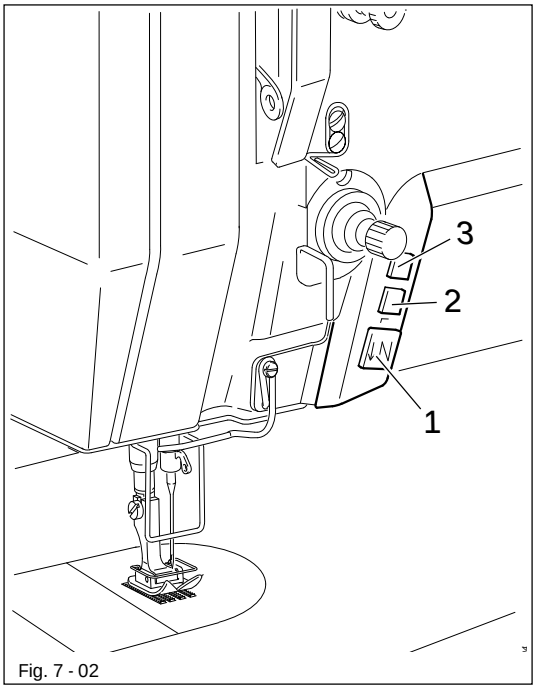

Fig. 7 - 02

- As long as key 1 is pressed during sewing, the machine sews in reverse.
- Bring the machine into a switching position (for switching from zig-zag to multi-stitch or from multi-stitch to zig-zag) by operating key 2.
- Key 3 can be assigned with the appropriate parameter settings, see Motor Instruction Manual.

7.03 Pedal

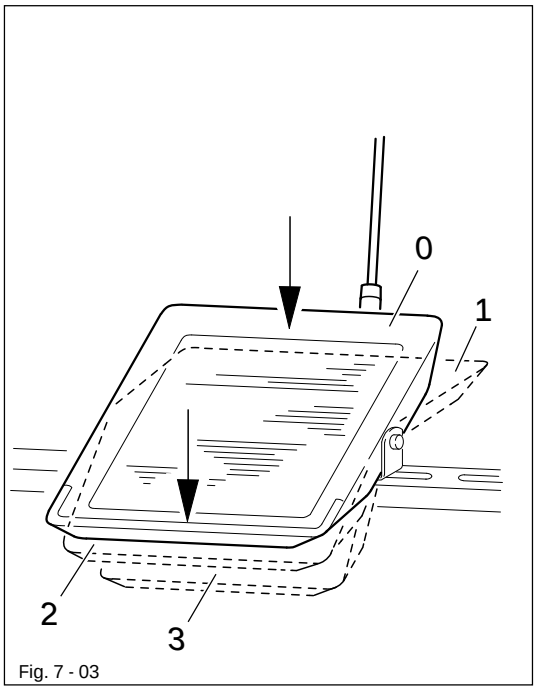

Fig. 7 - 03

0 = Neutral position

1 = Sewing

2 = Raise presser foot

3 = Trim thread

7.04 Lever for raising presser foot

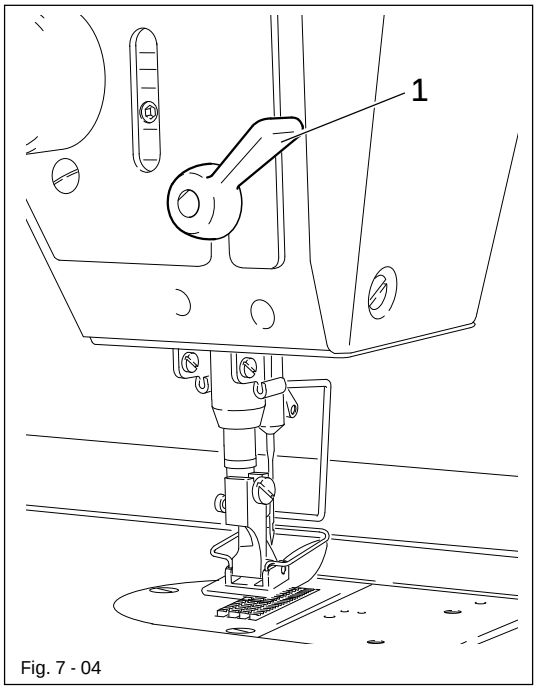

Fig. 7 - 04

- The presser foot is raised by turning lever 1.

7.05 Adjustment lever for zigzag stitch and needle position

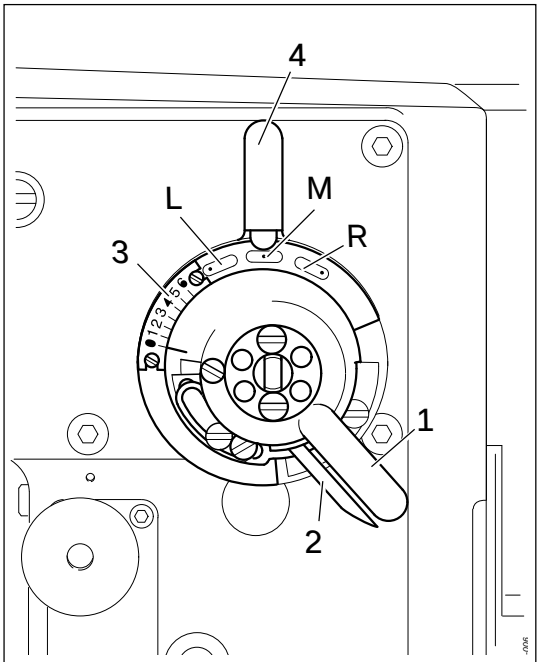

Fig. 7 - 05

- The zigzag stitch adjustment lever 1 is used for adjusting the width of the zigzag stitch.
- To change the position of the adjustment lever, the locking lever 2 must be pressed against the adjustment lever 1.

The current zigzag-stitch width can be seen on scale 3.

- By turning the needle-position adjustment lever 4 the required needle position can be set.

L = needle-position left
M = needle-position center
R = needle-position right

7.06 Reverse-feed key

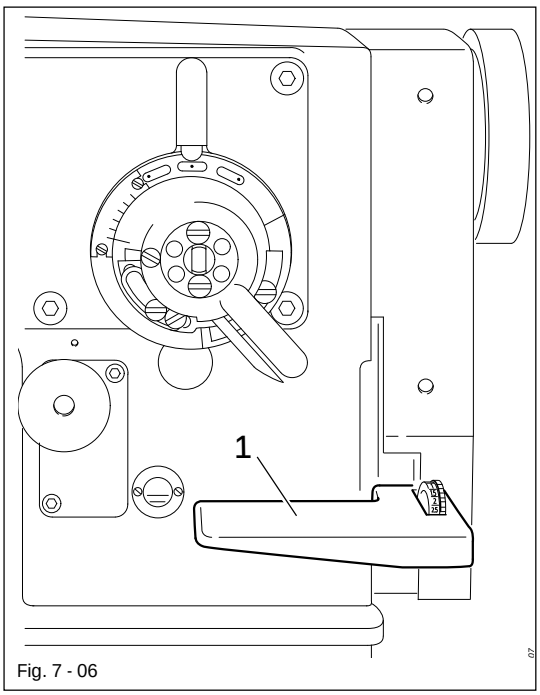

Fig. 7 - 06

- The machine sews in reverse as long as the reverse-feed key 1 is pressed.

7.07 Stitch length adjustment wheel

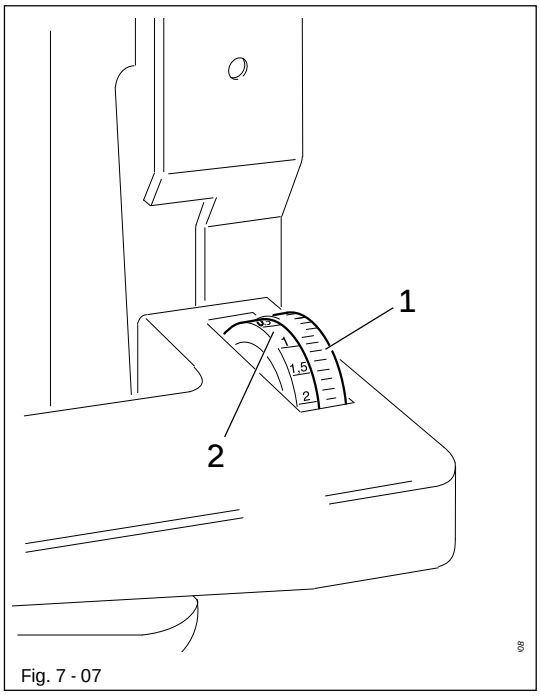

Fig. 7 - 07

- The stitch length can be adjusted by turning the stitch length adjustment wheel 1.

The stitch length setting can be read on scale 2.

7.08 Adjustment wheel for multi-stitch and zigzag stitch

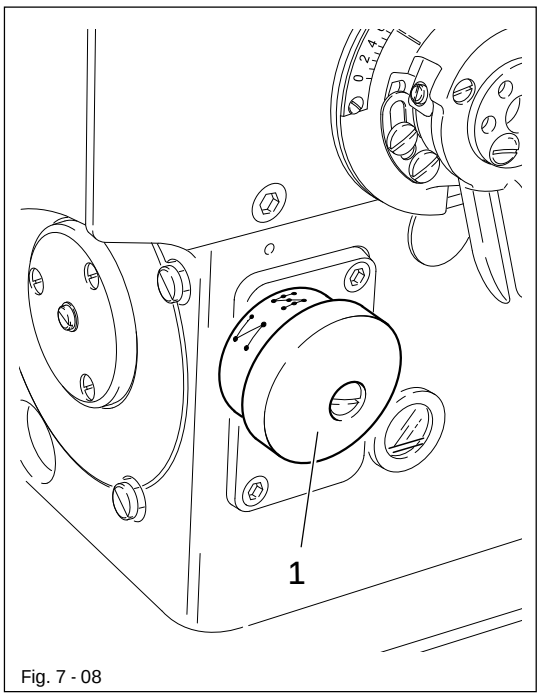

Fig. 7 - 08

Before sewing begins, make sure that adjustment wheel 1 is locked in position! Only switch over when the machine is at a standstill! Danger of machine damage!

- It is possible to switch between multi stitch and zigzag stitch with adjustment wheel 1, see Chapter 9.08 Adjusting the multi- or zigzag stitch.

7.09 Control panel (only on machines with Quick-flange motor)

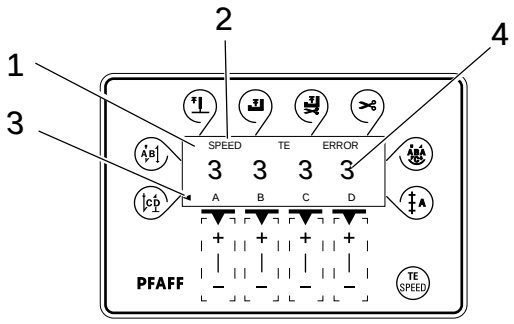

The control panel consists of display 1 and the function keys described below. The display 1 consists of a single-line alpha-numerical, 7 segment LCD display with 8 symbols. The texts 2, located above and next to the LCD display, show the respective status of the function keys and the operating status of the machine. The control panels switches on all LCD-segments and the horn automatically for a short time during the power-on phase, after which the lettering PFAFF appears on the display, until the higher-ranking control unit sends commands to the control panel.
The function keys are located around the display 1. They are foil-packed without permanent marking and without contact signal. Fixed functions are allocated to the keys, see Chapter 7.09.02 Function keys.

7.09.01 Screen displays

- Activated functions are displayed with a triangular marking 3 below or next to the respective function key.
- In the sewing mode all relevant sewing data is displayed and can be changed directly, depending on the status of the machine, see also Chapter 10 Sewing.
- During the parameter input the selected parameter number with the corresponding value is displayed, see Chapter 12.07.02 Example of a parameter input.

7.09.02 Function keys

The function keys described below are used basically to switch machine functions on and off.
Each time a key is pressed, this must be confirmed by at least one beep tone. Irrespective of the machine mode a double beep signal is given if invalid keys are pressed or maximum values reached.

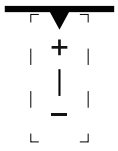

If a corresponding value has to be set for the activated function, this is carried out with the corresponding +/- key. By pressing and holding the corresponding +/- key, the relevant numerical value 4 is changed slowly to begin with. If the corresponding +/- key is held down longer, the values change more quickly.



Start backtacks

- If this key is pressed, the backtacks at the beginning of the seam (start backtacks) are switched on or off. The number of forward stitches (A) or reverse stitches (B) for the start backtacks can be changed by pressing the +/- key underneath. To convert from double backtack to single backtack set the number of stitches for the corresponding seam section at zero.



End backtacks

- If this key is pressed, the backtacks at the end of the seam (end backtacks) are switched on or off. The number of reverse stitches (C) or forward stitches (D) can be changed by pressing the +/- key underneath. To convert from double backtack to single backtack set the number of stitches for the corresponding seam section at zero.



Needle position

- If this key is pressed the "needle raised after sewing stop" function is switched on or off. When the function is switched on, the needle positions at t.d.c. after sewing stops.



Foot position after stop

- If this key is pressed the "foot raised after sewing stop" function is switched on or off. When the function is switched on, the presser foot is raised after sewing stops.



Foot position after trimming

- If this key is pressed the "foot raised after thread trimming" function is switched on or off. When the function is switched on, the presser foot is raised after thread trimming.



Thread trimmer

- If this key is pressed the thread trimming function is switched on or off.



Darning program

- If this key is pressed the darning program function is switched on or off. The counted seam function is switched off automatically.



Counted seam

- If this key is pressed the counted seam function is switched on or off. The darning program function is switched off automatically.



TE/Speed

- If this key is pressed once the speed limit for the sewing mode is activated.
- If this key is pressed twice (within 5 seconds) the machine changes from sewing to input mode.

8 Installation and commissioning

The machine must only be installed and commissioned by qualified personnel!
All relevant safety regulations must be strictly adhered to!

If the machine is delivered without a table, be sure to use a stand and table top that can hold the weight of the machine with its motor.
It is very important to ensure that the stand of the machine is firm and steady, also during sewing.

8.01 Installation

The site where the machine is installed must be provided with suitable connections for electric current.
It must be ensured that the standing surface of the machine site is firm and horizontal, and that sufficient lighting is provided for.

For packing and transportation reasons the table top is in the lowered position.
The table height is adjusted as described below.

8.01.01 Adjusting the table height

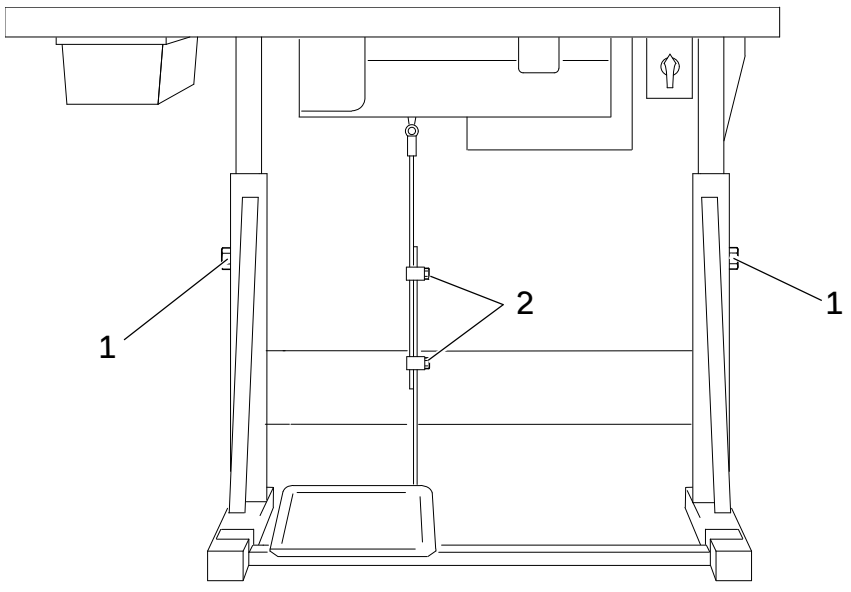

Fig. 8 - 01

- Loosen screws 1 and 2 and set the table height as required.
- Firmly tighten screw 1.
- Set the required pedal position and tighten screw 2.

8.01.02 Mounting the upper V-belt guard / Fitting the machine cover

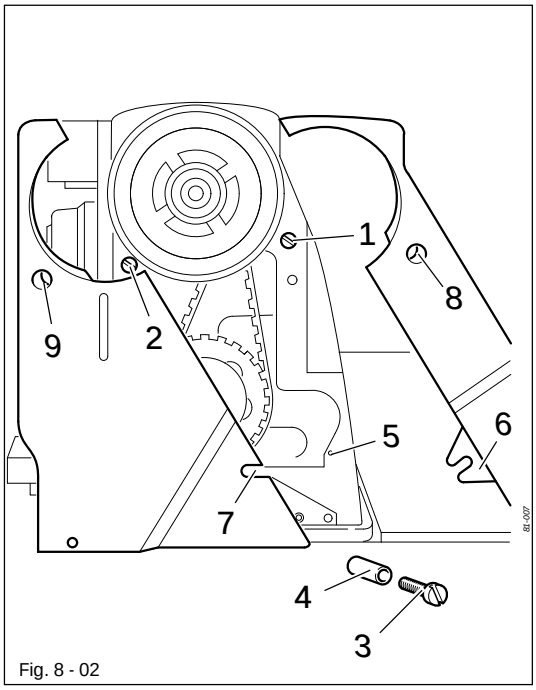

Fig. 8 - 02

- Slide the left and right halves of the V-belt guard into place with the slots behind the heads of screws 1 and 2.
- Screw screw 3 with distance bush 4 into threaded hole 5.
- Align the V-belt guard, taking care that clip 6 is behind slot 7 and in front of distance bush 4.
- Tighten screws 1 and 2 (through holes 8 and 9) and screw 3.
- When using an external motor, the motor cover must also be fitted as described by the motor manufacturer.

8.01.03 Fitting the reel stand

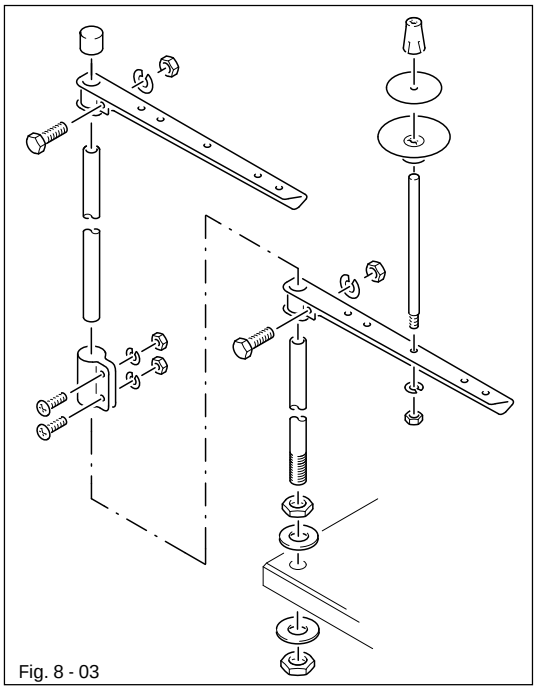
Fig. 8 - 03

- Fit the reel stand as shown in Fig. 8-03.
- Afterwards insert the stand in the hole in the table top and secure it with the nuts provided.

8.02 Fitting the Quick-flange motor.

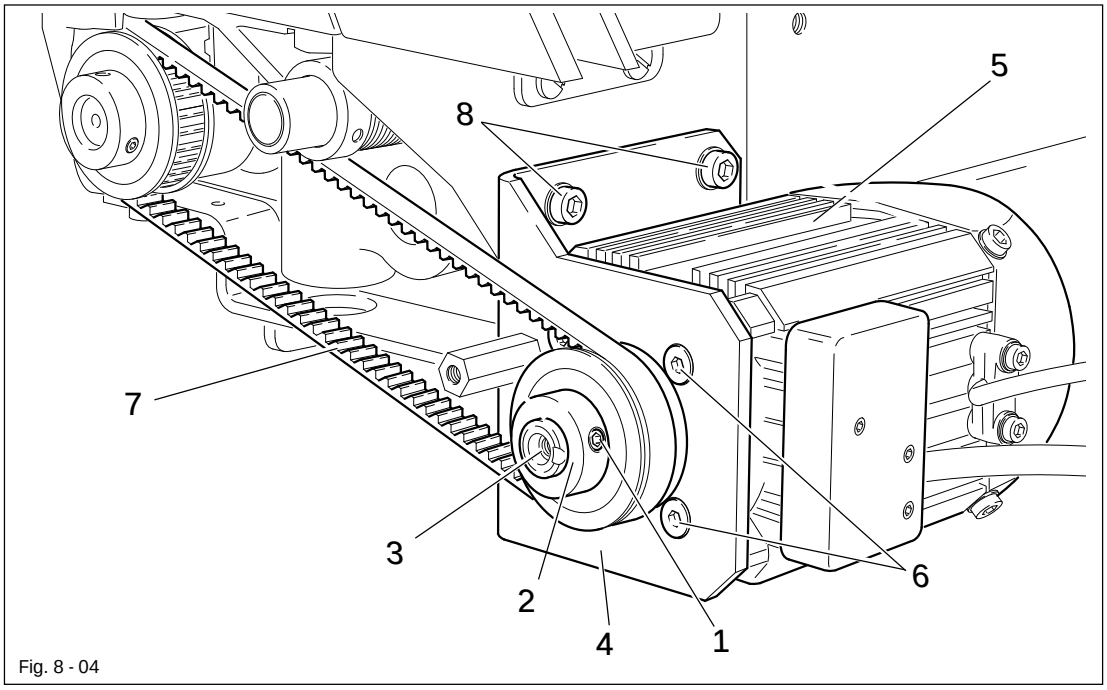

Fig. 8 - 04

- Loosen screws 1 and remove toothed belt wheel 2 from the motor shaft 3.
- Attach bearing plate 4 to the motor 5 with screws 6 as shown in Fig. 8-04.
- Slide toothed belt wheel 2 onto the motor shaft 3 and fasten with screws 1.
- Slightly tilt bearing plate 4 with motor 5 to the side and place the toothed belt 7 on the toothed belt wheels.
- Align bearing plate 4 of motor 5 on the machine case and attach it with screws 8.

8.03 Fit the belt guard of the Quick flange-motor.

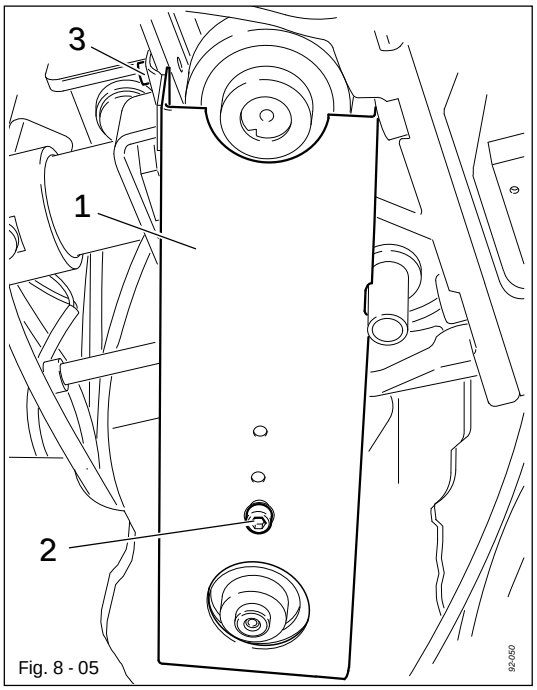

Fig. 8 - 05

- Attach belt guard 1 with screws 2 and 3.

8.04 Connect the plug-type connections and earth cable of the Quick-flange motor.

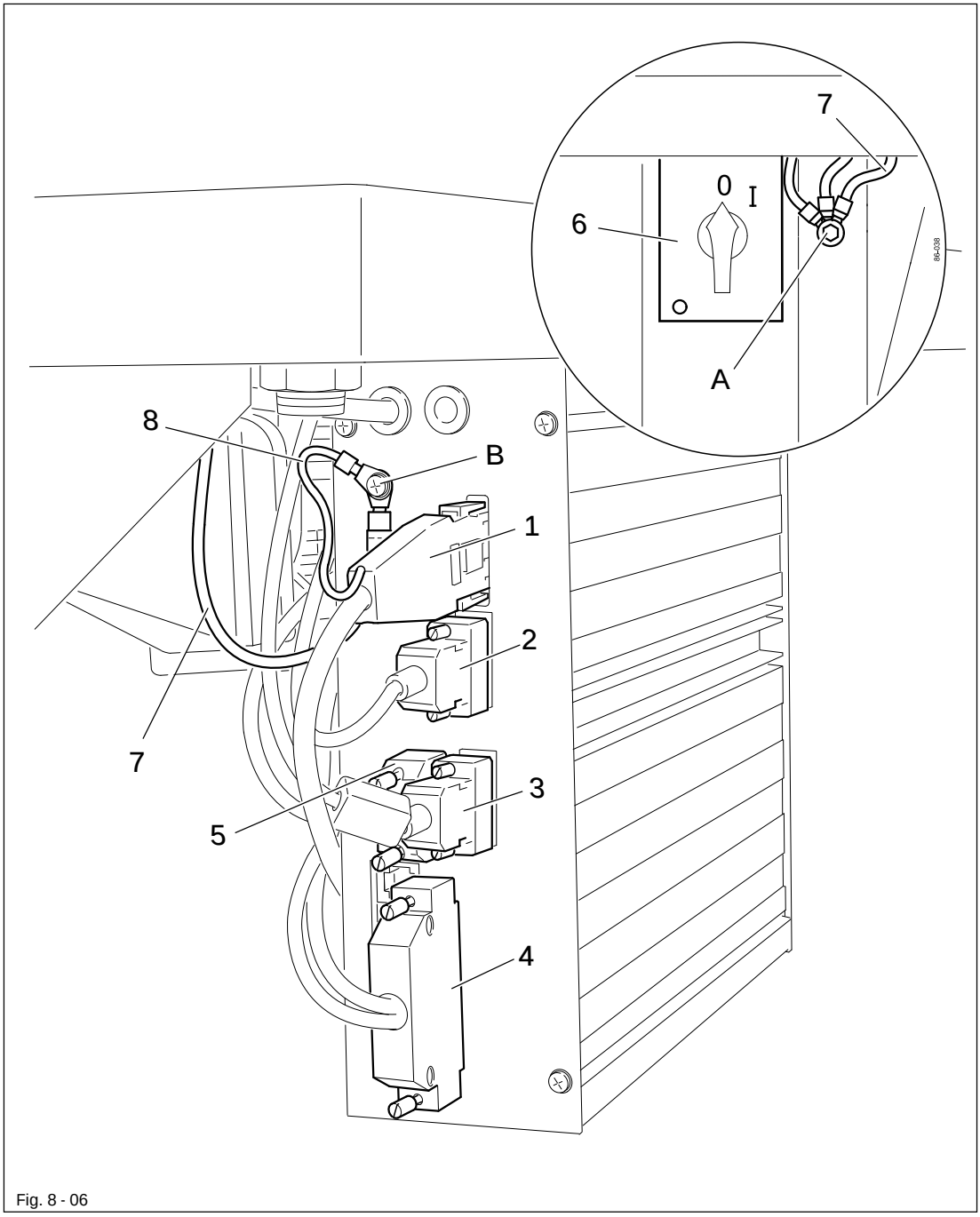

Fig. 8 - 06

- Connect all the plugs 1-5 to the control box as labelled.
- Screw the earth cable from the sewing head and from main switch 6 to earth point A.
- Connect earth point A and earth point B with earth cable 7.
- Screw the earth cable 8 from the motor to earth point B.

8.05 Commissioning

- Examine the machine, in particular the electric cables and pneumatic connection tubes for any damage.
- Clean the machine thoroughly and then oil it.
- Have qualified personnel check whether the machine can be operated with the available voltage and whether it is connected properly in the terminal box. If there are any irregularities do not operate the machine under any circumstances.
- When the machine is running, the balance wheel must turn towards the operator, see Chapter 8.07 Basic position of the machine drive unit.
- Connect the machine to the compressed air system. The pressure gauge should show a pressure of 6 bar. If necessary, adjust the value, see Chapter 11.05 Checking/adjusting the air pressure.

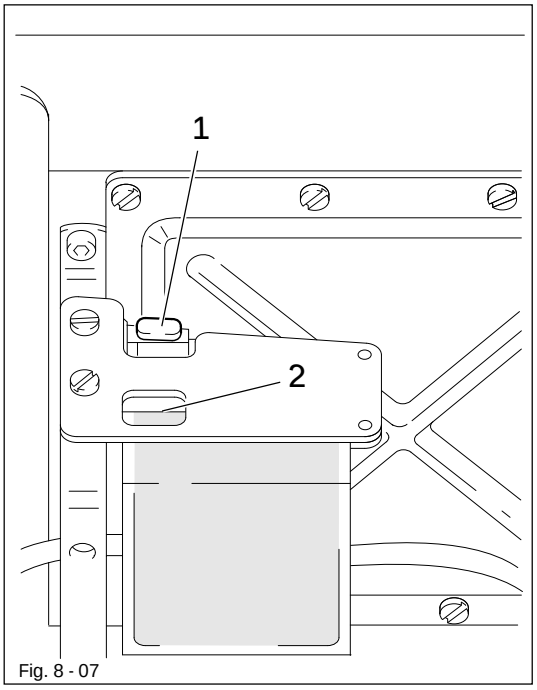

Fig. 8 - 07

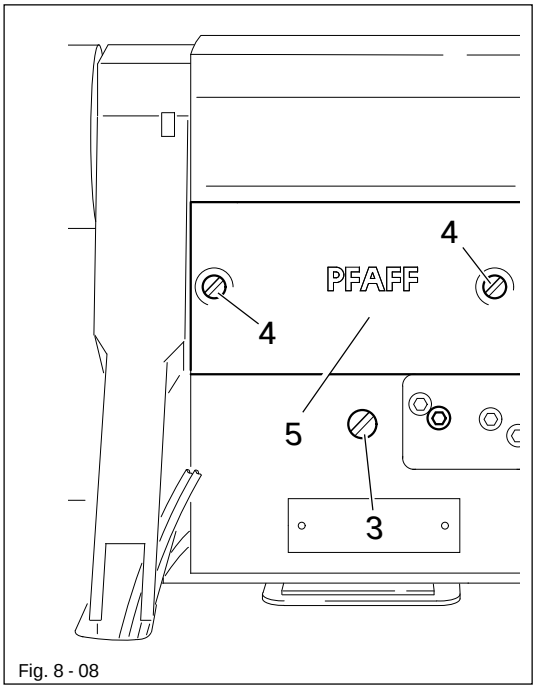

Fig. 8 - 08

- Before commissioning the machine remove plug 1 from its hole and fill in oil up to marking 2, see Chapter 11.02 Oiling the hook.

Plug 1 serves as a safety device for transportation and should not be used during sewing operations.

- Before commissioning the machine remove screw 3 and fill in oil up to the marking (inspection glass on the front side of the machine), see Chapter 11.03 Oiling the zigzag drive.

8.06 Switching the machine on/off

- Switch the machine on, see Chapter 7.01 Main switch.
- Carry out a test run.

8.07 Basic setting of the machine drive unit (only on machines with Quick-flange motor)

- Switch on the machine.

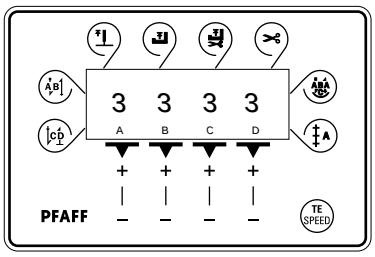

2 x TE SPEED

- Press TE/Speed key twice to call up the input mode.

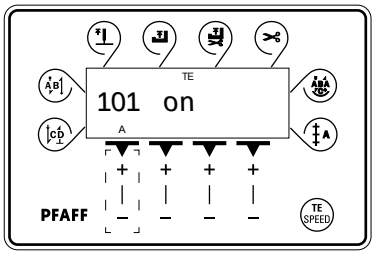

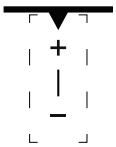

- By pressing the corresponding +/- key, call up parameter "798" and select service level "C", see Chapter 12.07.01 Selecting the user level

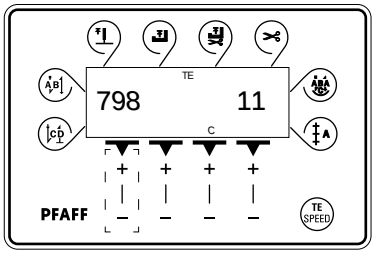

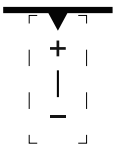

- By pressing the corresponding +/- key, call up parameter "800" (rotation direction of the motor).
- By pressing the corresponding +/- key enter the value "1".

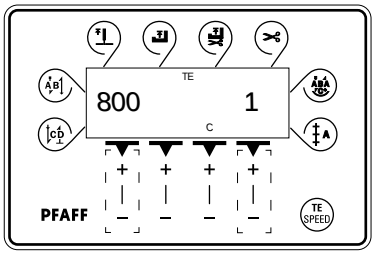

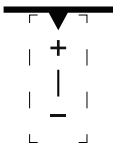

- By pressing the corresponding +/- key select parameter "700".

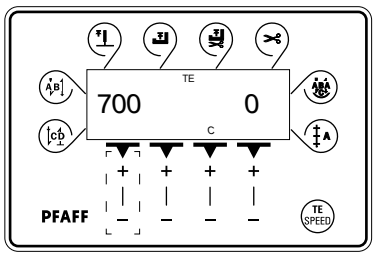

- Sew one stitch by operating the pedal.
- Turn the balance wheel in the direction of sewing until the tip of the needle is level with the top edge of the needle plate.

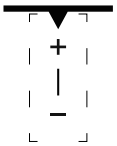

- By pressing the corresponding +/- key, select parameter "702".

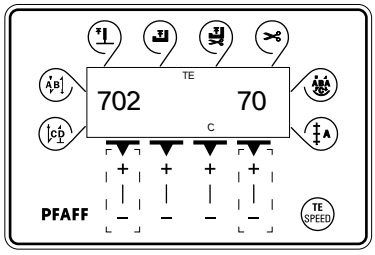

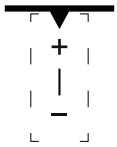

- By pressing the corresponding +/- key, enter the value "70".

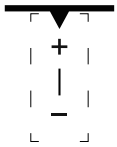

- By pressing the corresponding +/- key, select parameter "703".

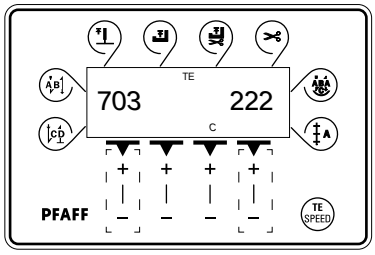

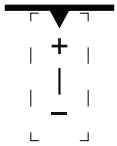

- By pressing the corresponding +/- key, enter the value "222".



- Conclude the adjustment of the sewing motor by pressing the TE/Speed key.



The adjustment described above only applies to machines with Eco-Drive! When using another type of motor, please observe the motor instruction manual of the manufacturer.

8.08 Mounting/connecting the start inhibitor (only on machines with Quick-flange motor)

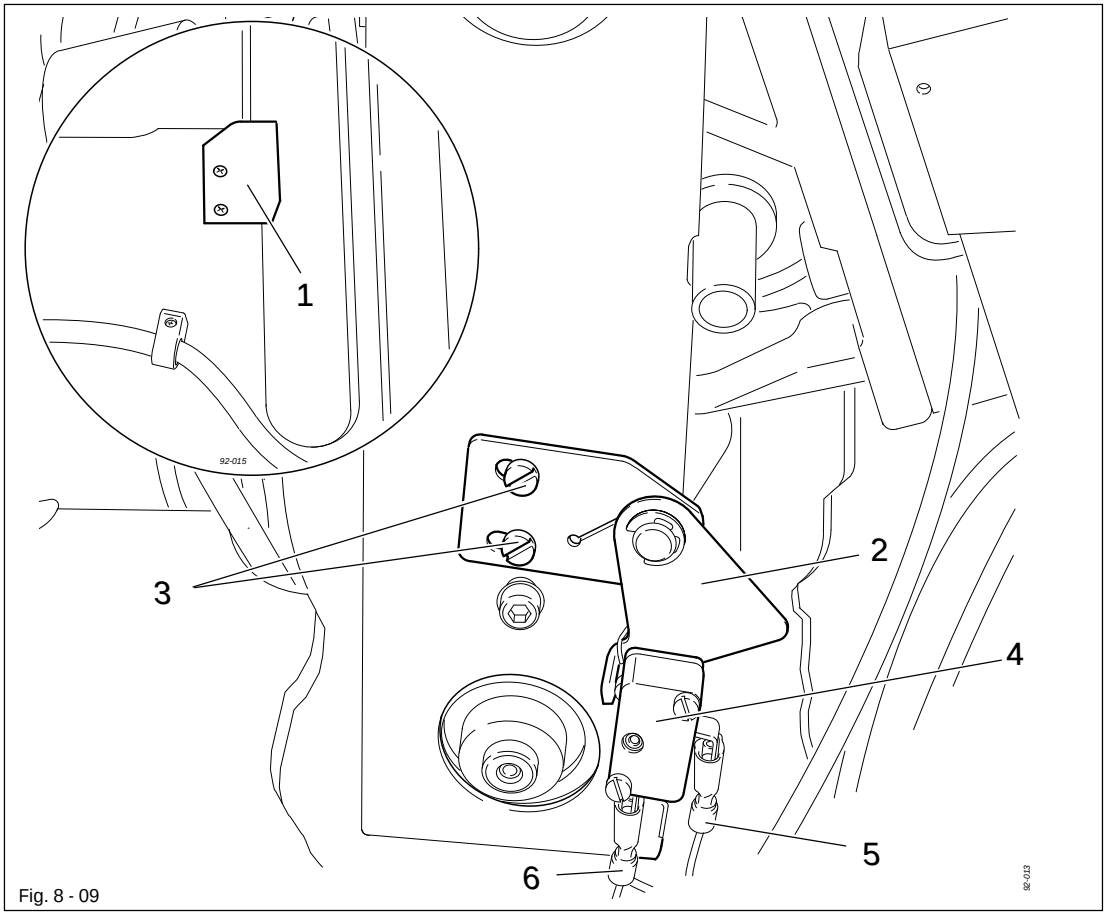

Fig. 8 - 09

- For machines delivered without a table, the plate 1 from the accessories should be mounted under the table top, so that the switch lug 2 is resting on plate 1 when the sewing head is in an upright position.
- Loosen screws 3 and adjust switch 4 so that the switch lug 2 is free when the sewing head is tilted back and pressed when the sewing head is upright.
- Connect plugs 5 and 6 to the switch 4.

Function check of the start inhibitor

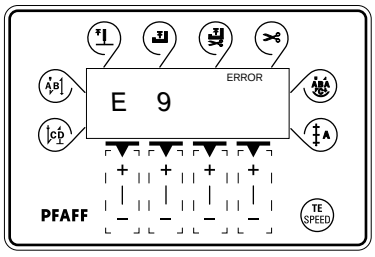

- Switch the machine on at the main switch and tilt it back.
  The error message "E9" must appear on the control panel.
- If the message does not appear, check the setting of switch 4.
- Set the sewing head upright and acknowledge the error message by pressing the TE/ Speed key. The machine is ready for operation again.

9 Setting up

All instructions and regulations in this instruction manual must be observed. Special attention must be given to all safety regulations!

All setting-up work must only be done by personnel with the necessary training. For all setting-up work the machine must be isolated from its power supply by turning off the on/off switch or removing the machine plug from the electric power socket!

9.01 Inserting the needle

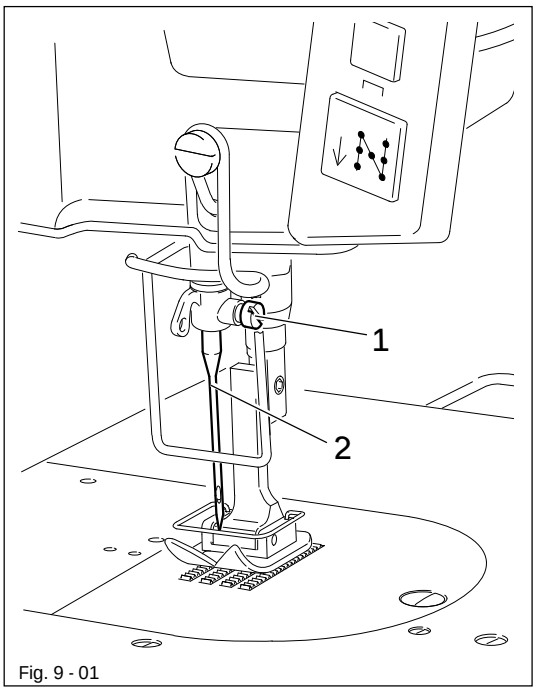

Fig. 9 - 01

Switch off the machine! Danger of injury if the machine is started accidentally!

Only use needles of system 438.

- Bring the needle bar into its highest position.
- Loosen screw 1.
- Insert the needle 2 as far as possible.
- The long needle groove must be facing forwards.
- Tighten screw 1.

9.02 Winding the bobbin thread; adjusting the primary thread tension

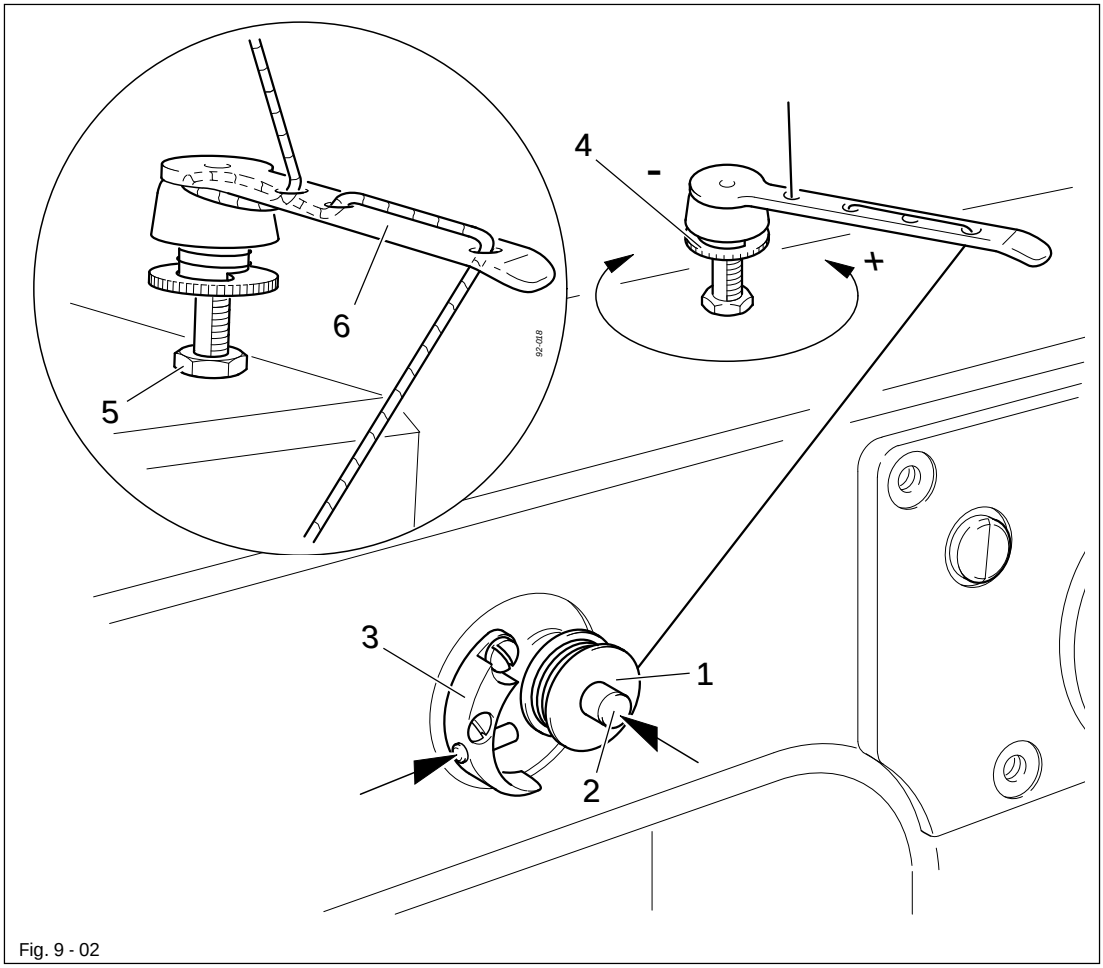

Fig. 9 - 02

- Place an empty bobbin 1 onto bobbin winder spindle 2.
- Thread the bobbin as shown in Fig. 9 - 02 and wind it clockwise around bobbin 1 a few times.
- Switch on the bobbin winder while at the same time pressing bobbin winder spindle 2 and lever 3.

The bobbin is filled up during sewing.

- The thread tension on bobbin 1 can be adjusted using knurled screw 4.
- The bobbin winder stops automatically when bobbin 1 is full.

If the thread is wound unevenly:

- Loosen nut 5.
- Turn thread guide 6 accordingly.
- Tighten nut 5.

9.03 Removing/inserting the bobbin case

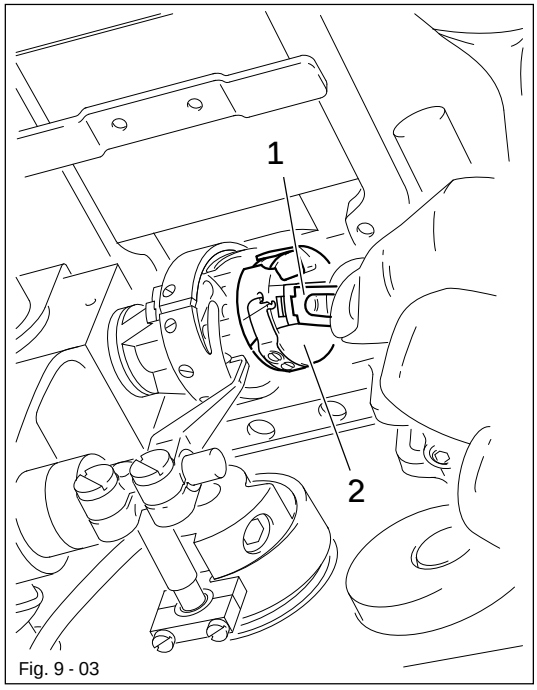

Fig. 9 - 03



Turn the machine off!

Removing the bobbin case.

- Lift clip 1 and remove bobbin case 2.

Inserting the bobbin case:

- Insert bobbin case 1 until you feel it click into place.

9.04 Threading the bobbin case, adjusting the thread tension

9.04.01 PFAFF 938 U without thread trimmer

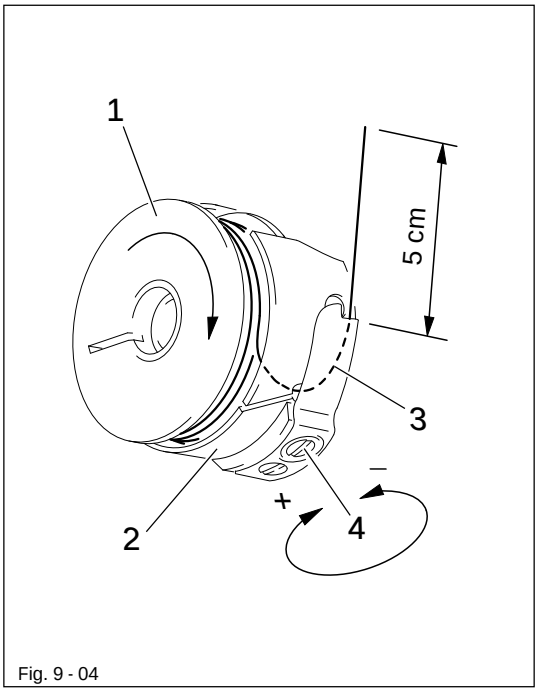

Fig. 9 - 04

- Insert bobbin 1 into bobbin case 2.
- Guide the thread through the slot under spring 3.
- Adjust the thread tension by turning screw 4.



When the thread is pulled the bobbin 1 must rotate in the direction of the arrow.

9.04.02 PFAFF 938 U with thread trimmer

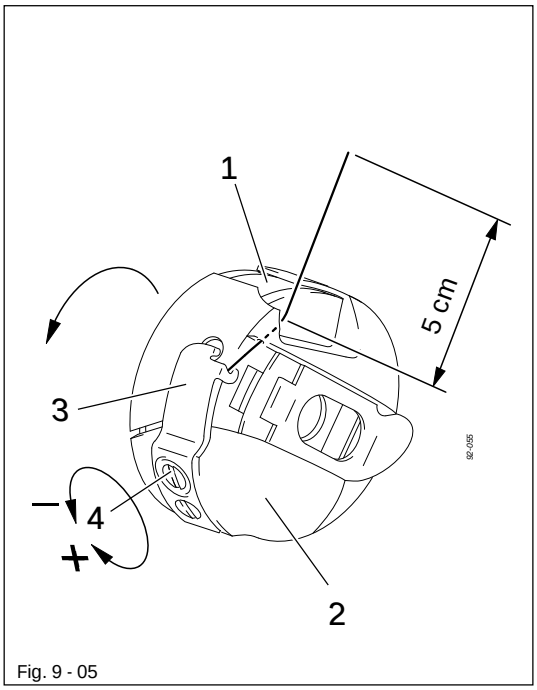

Fig. 9 - 05

- Insert bobbin 1 into bobbin case 2.
- Guide the thread through the slot under spring 3.
- Adjust the thread tension by turning screw 4.

When the thread is pulled the bobbin 1 must rotate in the direction of the arrow.

9.04.03 PFAFF 918 U

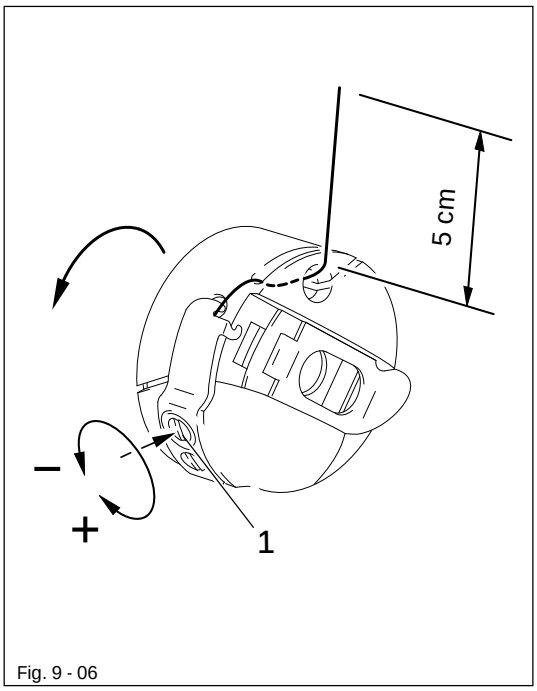

Fig. 9 - 06

- Pull the thread through the slot under the spring as shown in the opposite illustration.
- Adjust the thread tension by turning screw 1.

When the thread is pulled, the bobbin 1 must turn in the direction of the arrow.

9.05 Threading the needle thread / Adjusting the needle thread tension

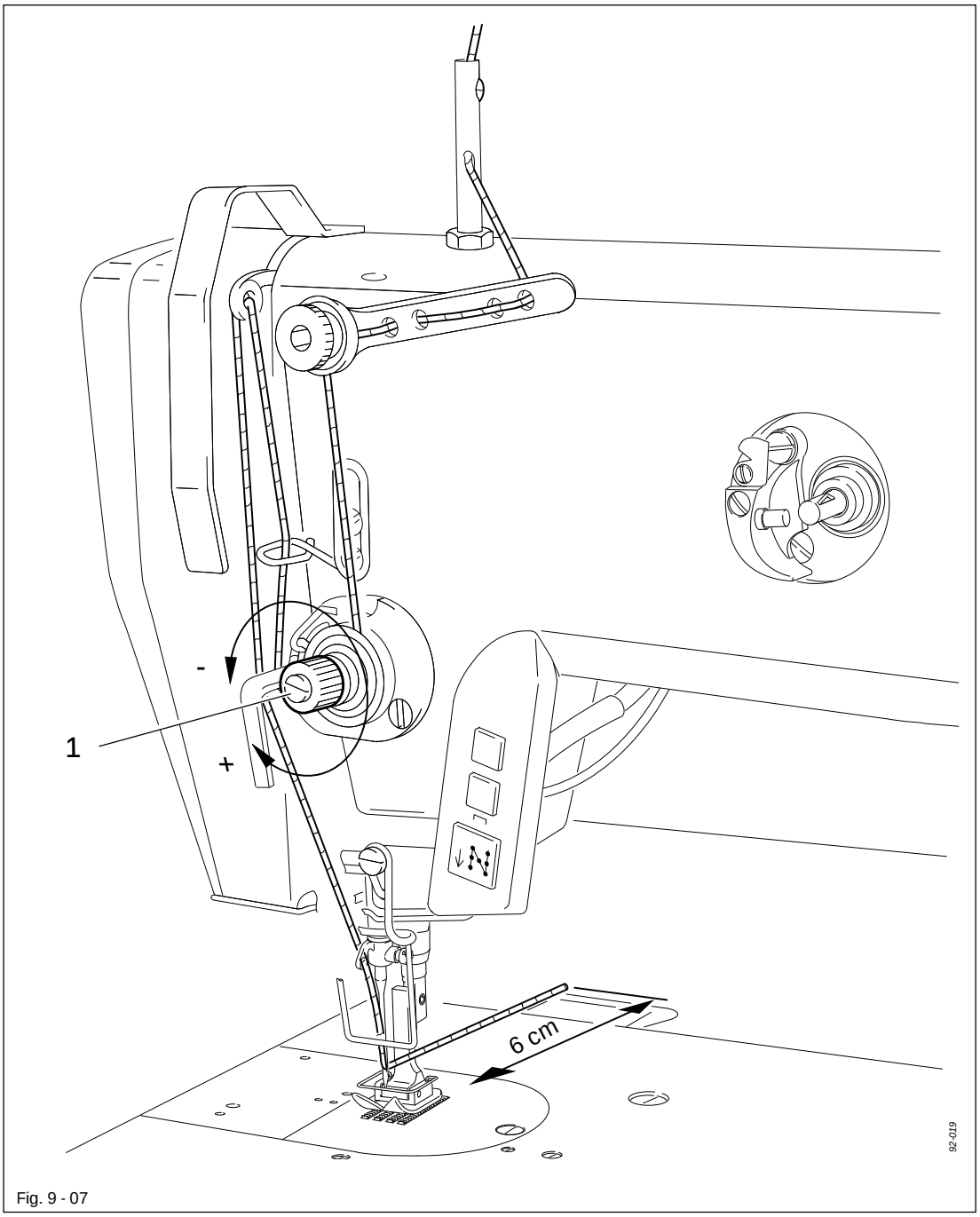

Fig. 9 - 07

Switch off the machine!
Danger of injury if the machine is started accidentally!

- Thread the needle thread as show in the above illustration.
- Adjust the needle thread tension by turning milled screw 1.

9.06 Setting the zigzag stitch and the stitch position

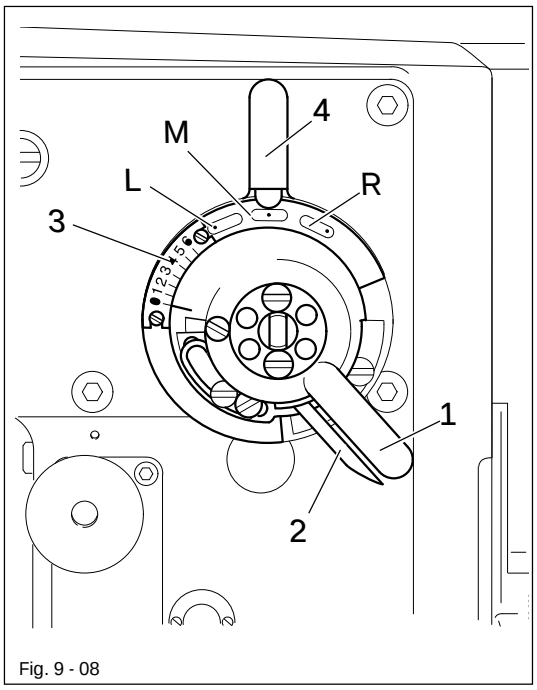

Fig. 9 - 08

- Set the zigzag stitch width by turning the zigzag lever 1.
- To vary the adjustment press catch 2 against zigzag lever 1.
- The setting can be read from scale 3.
- Set the stitch position by turning stitch position lever 4.

L = stitch position on left
M = stitch position in the middle
R = stitch position on the right

9.07 Adjusting the stitch length

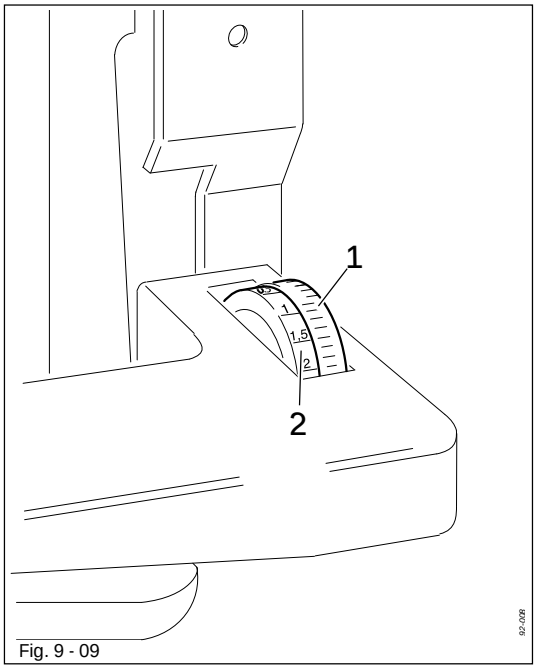

Fig. 9 - 09

- Adjust the stitch length by turning the feed regulator wheel 1.
- The setting can be read on scale 2.

9.08 Adjusting the multi-stitch or the zigzag stitch

(only on machines with Quick-flange motor)

9.08.01 Changing from zigzag stitch to multi-stitch

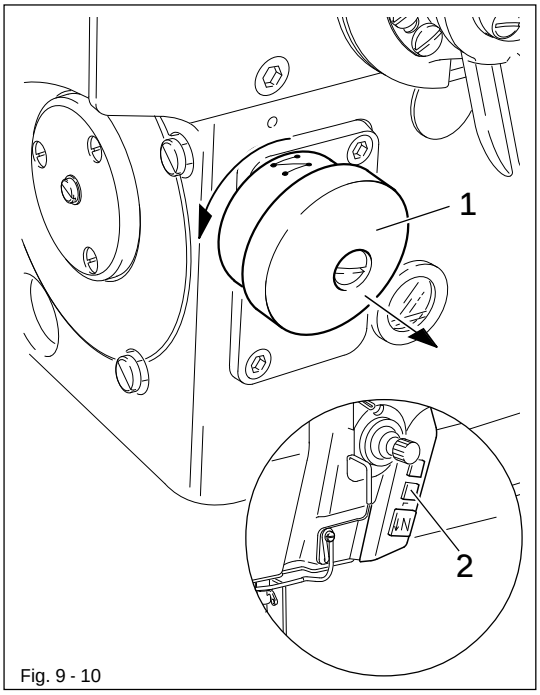

Fig. 9 - 10

Before sewing begins, make sure that adjustment wheel 1 is locked in position! Only switch over when the machine is at a standstill! Danger of machine damage!

- Bring the machine into a switching position by operating key 2.
- Pull adjustment wheel 1 and turn it in the direction of the arrow until it clicks into position.

9.08.02 Changing from multi-stitch to zigzag stitch

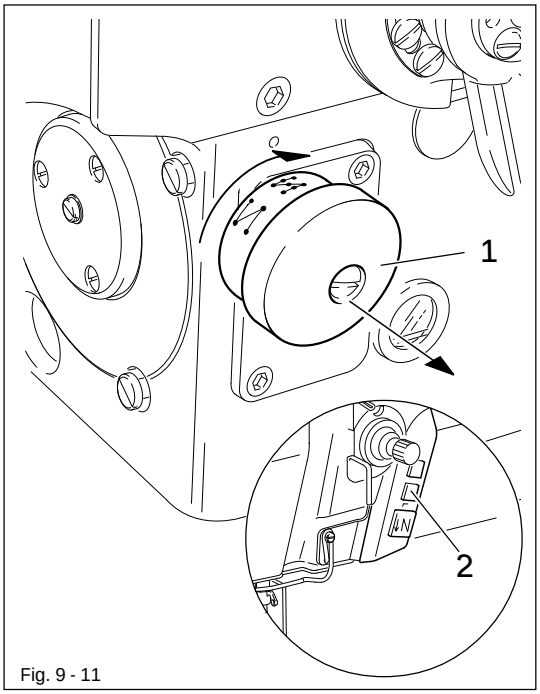

Fig. 9 - 11

Before sewing begins, make sure that adjustment wheel 1 is locked in position! Only switch over when the machine is at a standstill! Danger of machine damage!

- Bring the machine into a switching position by operating key 2.
- Pull adjustment wheel 1 and turn it in the direction of the arrow until it clicks into position.

9.09 Adjusting the multi-stitch or the zigzag stitch (on machines with an external motor)

9.09.01 Changing from zigzag stitch to multi-stitch

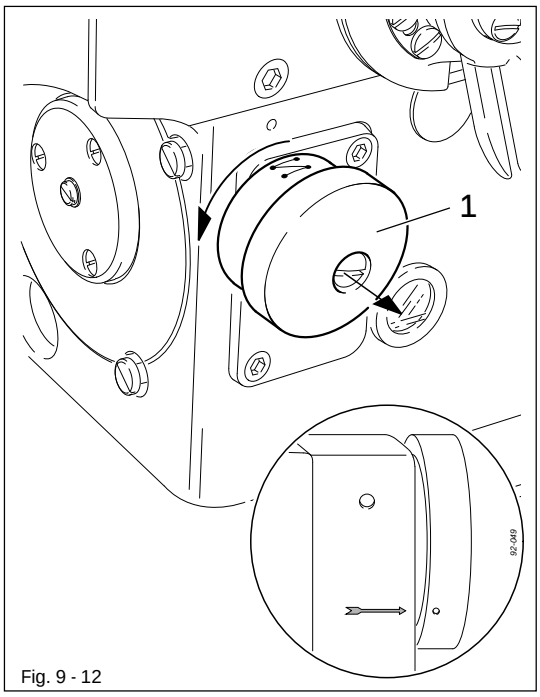

Fig. 9 - 12

Before sewing begins, make sure that adjustment wheel 1 is locked in position! Only switch over when the machine is at a standstill! Danger of machine damage!

- By turning the balance wheel bring the needle to its lowest position at its right point of penetration (the marking on the balance wheel and the arrow must match).
- Pull adjustment wheel 1 and turn it in the direction of the arrow.
- If adjustment wheel 1 does not lock into position, turn the balance wheel around twice (the marking on the balance wheel and the arrow must match).
- If necessary repeat the operation until the adjustment wheel locks into position.

9.09.02 Changing from multi-stitch to zigzag stitch

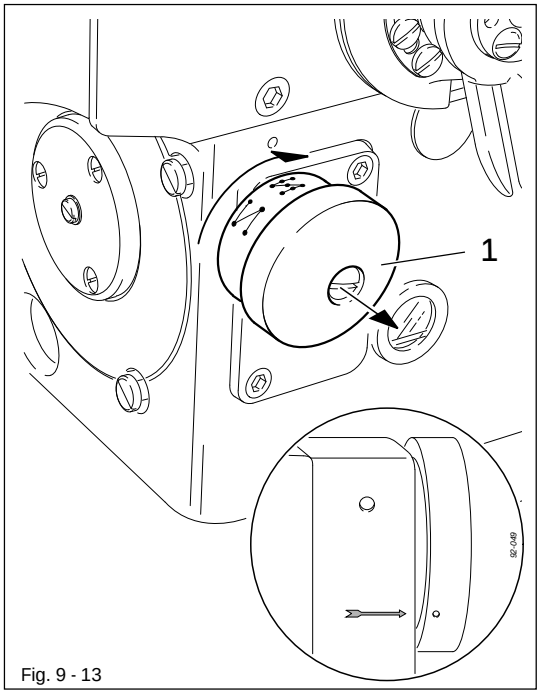

Fig. 9 - 13

Before sewing begins, make sure that adjustment wheel 1 is locked in position! Only switch over when the machine is at a standstill! Danger of machine damage!

- By turning the balance wheel bring the needle to its lowest position at its right point of penetration (the marking on the balance wheel and the arrow must match).
- Pull adjustment wheel 1 and turn it in the direction of the arrow.

9.10 Entering the start and end backtacks

- Switch on the machine.

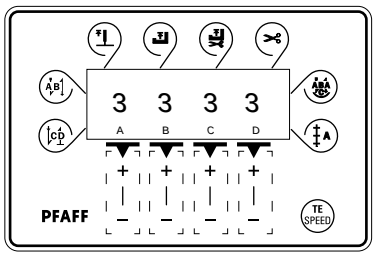

- If necessary switch off the "darning seam" or "counted seam" function, see Chapter 10.01 Darning program or Chapter 10.02 Counted seam.
- By pressing the corresponding +/- key ("A") select the desired value for the number of forward stitches (A) of the start backtack.
- By pressing the corresponding +/- key ("B") select the desired value for the number of reverse stitches (B) of the start backtack.
- By pressing the corresponding +/- key ("C") select the desired value for the number of reverse stitches (C) of the end backtack.
- By pressing the corresponding +/- key ("D") select the desired value for the number of forward stitches (D) of the end backtack.

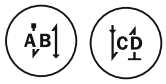

- By pressing the keys start backtack and/or end backtack, activate the corresponding function (arrow appears next to the corresponding function key).

10 Sewing (only on machines with Quick-flange motor)

In the sewing mode all relevant settings for the sewing operation are displayed. Functions can be switched on or off by pressing a key. Values for start and end backtacks or stitch placement can be changed directly.

When the machine is switched on, the sewing mode is always activated.

- Switch on the machine.

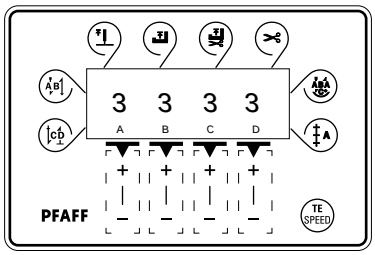

- If necessary switch off the function "darning seam" or "counted seam", see Chapter 10.01 Darning program or Chapter 10.02 Counted seam.

Functions in manual sewing, also see Chapter 7.12.02 Function keys:

Start backtacks on/off		Presser foot raised at end of seam on/off	
End backtacks on/off		Thread trimming on/off	
Needle position raised on/off		Darning program on/off	
Presser foot raised on/off		Counted seam on/off	

Sewing is carried out with the pedal functions, see Chapter 7.03 Pedal..

The "Darning program" and "Counted seam" functions are explained in more detail in Chapter 10.01 Darning program or Chapter 10.02 Counted seam.

10.01 Darning program

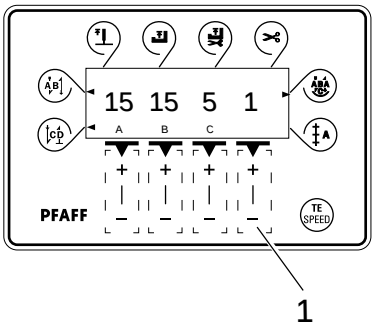

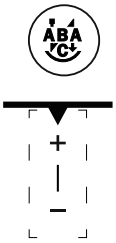

The corresponding function can be switched on or off directly with the Darning program key. The "counted seam" function is switched off automatically. Several darning programs with different seam sections A and/or B can be selected. The number of required darning programs can be selected by operating the +/- key 1. The number of stitches for the individual seam sections A and/or B can be selected by operating the corresponding +/- key. By operating the corresponding +/- key it is possible to select a repeating factor "C" for the selected darning program.
If the backtack functions are also activated, only the status backtack on or backtack off is displayed. The individual backtack parameters can be altered after the "darning program" function has been switched off, see Chapter 9.08 Entering start and end backtacks.

10.02 Counted seam

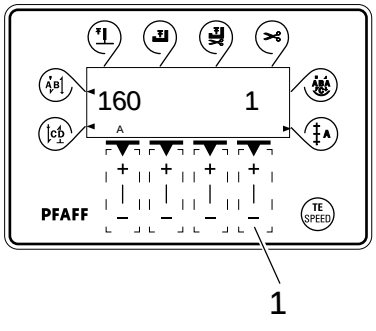

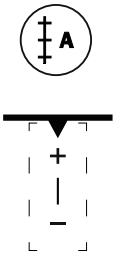

The corresponding function can be switched on or off directly with the Counted seam key. The "darning program" function is switched off automatically. Several counted seam sections can be selected. The number of required seam sections can be selected by operating the +/- key 1. The required number of stitches"A" of the selected seam section can be selected by operating the corresponding +/- key.
If the backtack functions are also activated, only the status backtack on or backtack off is displayed. The individual backtack parameters can be altered after the "counted seam" function has been switched off, see Chapter 9.08 Entering start and end backtacks.

10.03 Error messages

If a fault occurs, the text "ERROR" appears on the display, together with an error code and short instructions. An error message is caused by incorrect settings, faulty elements or seam programs as well as by overload conditions.
For an explanation of the error codes see Chapter 12.09 Explanation of the error messages.

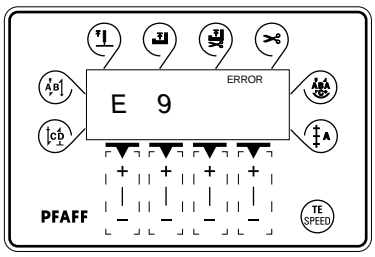

- Correct the error.



- Acknowledge error correction by pressing the TE/Speed key.

11 Care and maintenance

Cleaning	daily, several times by continuous operation
Checking the oil level (hook oil tank)	once a year▲
Checking the oil tank(zigzag eccentric lubrication)	daily, before operation
Checking/adjusting the air pressure	daily, before each operation
Cleaning the air filter/lubricator	Cleaning the air filter/lubricator

▲ This maintenance interval if for an average machine running time in a single shift operation. If the machine running times are longer, shorter maintenance intervals are recommended.

11.01 Cleaning

Switch off the machine!
Danger of injury if the machine is started accidentally!



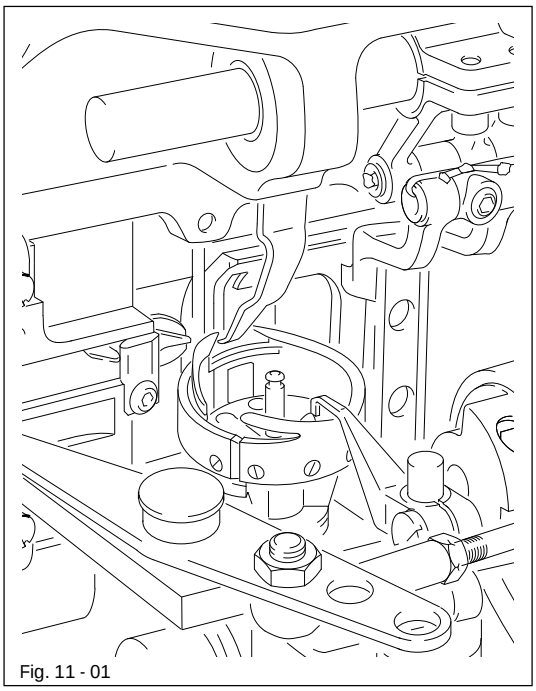

Fig. 11 - 01

- Tilt back the machine head.
- Clean the hook and the hook compartment daily, more often if in continuous operation.



Use both hands to set the machine upright!
Danger of crushing between sewing head and table top!

11.02 Lubricating the hook

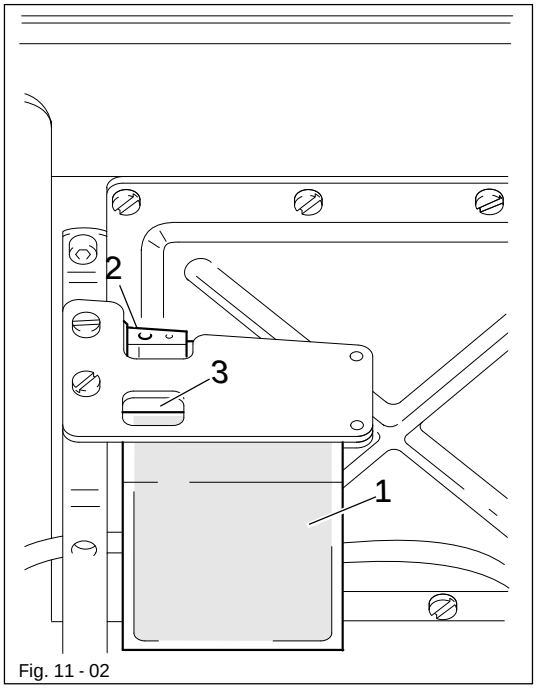

Fig. 11 - 02

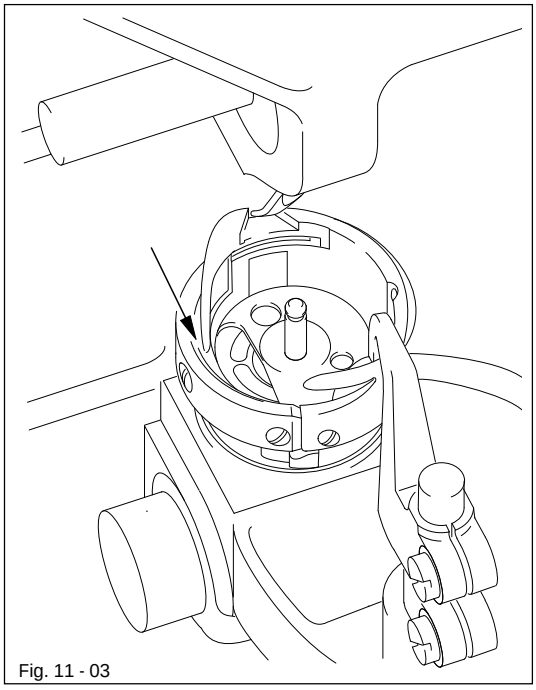
Fig. 11 - 03

Turn the machine off!
Danger of injury if the machine is started accidentally!

Only use oil with a mean viscosity of 10.0 mm^2/s at 40°C and a density of 0.847 g/cm^3 at 15°C.

- Lay the machine head on its back.
- Fill the oil reservoir 1 up to the upper marking 3 through hole 2.
- Before operating the machine for the first time or after longer stationary periods, add a few additional drops of oil into the hook race (see arrow in Fig. 11-03).

Return the machine to its upright position with both hands. Danger of crushing between machine head and table top!

We recommend PFAFF sewing machine oil.
Part no. 280-1-120 105.

11.03 Oiling the zigzag drive

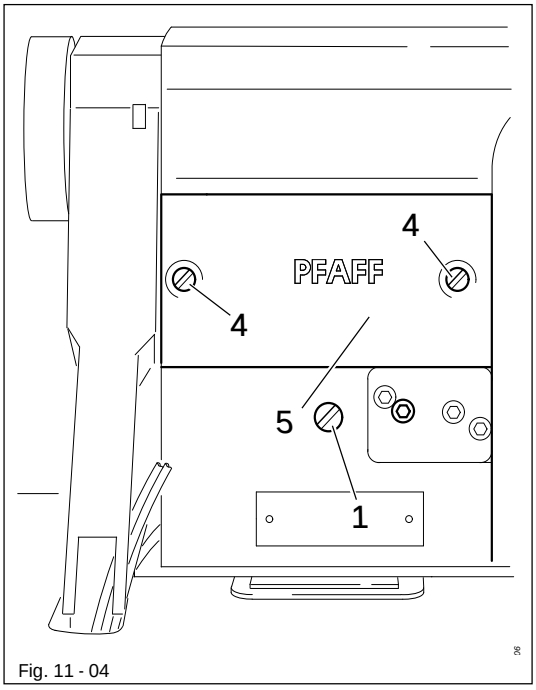

Fig. 11 - 04

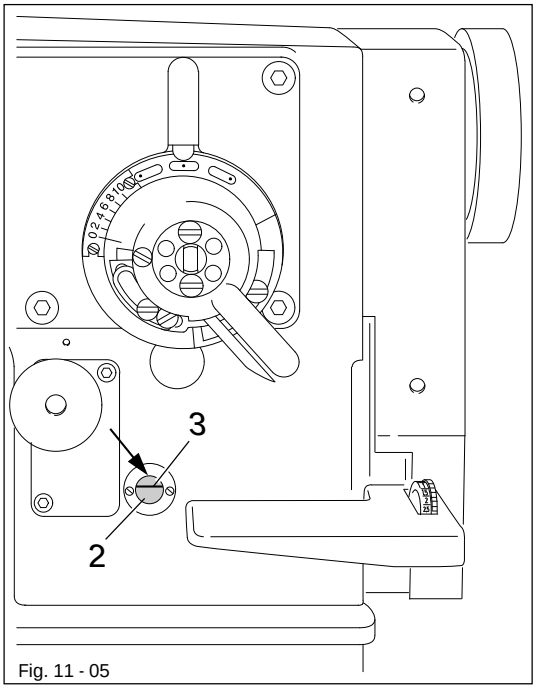

Fig. 11 - 05

Switch off the machine!
Danger of injury if the machine is started accidentally!

Only use oil with a mean viscosity of 68.00 m^2/s at 40° C and a density of 0.881 g/cm^3 at 15° C.

- Check the oil level before each operation.
- When necessary, remove screw 1 and pour in oil until sight glass 2 is full.
- Tighten screw 1.

Never allow the oil level to sink below the minimum mark 3!
Danger of damage to the machine!

To fill in larger quantities of oil, e.g. when filling for the first time before commissioning, it is better to remove cover 5.

- Loosen screws 4 and remove cover 5.
- Take care that no dirt gets into the case.
- Pour in oil until sight glass 2 is full.
- Clean the surface of cover 5, the case and the seal.
- Replace cover 5 and tighten screws 4.

We recommend PFAFF sewing machine oil, part no. 280-1-120 146.

11.04 Cleaning the air filter of the air-filter / lubricator

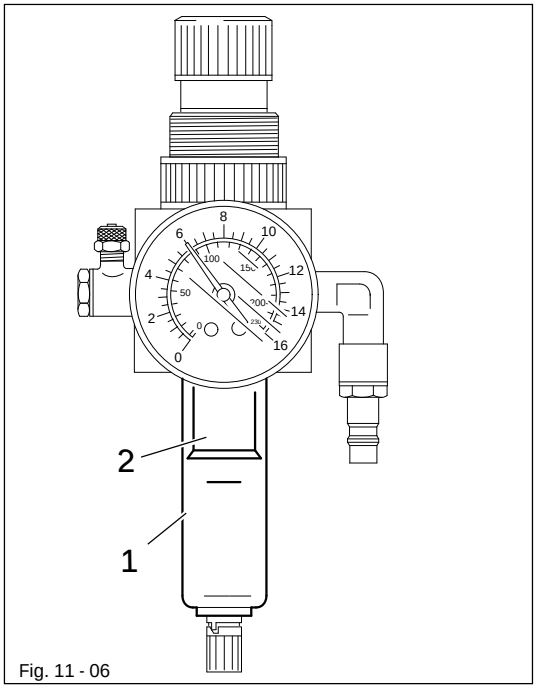

Fig. 11 - 06

Switch the machine off!
Disconnect the air hose at the air-filter / lubricator.

To drain water bowl 1:

- Water bowl 1 drains itself automatically when the compressed-air hose is disconnected from the air-filter / lubricator.

Cleaning filter 2:

- Unscrew water bowl 1.
- Take out filter 2.
- Clean filter 2 with compressed air or isopropyl alkohol (part No. 95-665 735-91).
- Screw in filter 2 and screw on water bowl 1.

11.05 Checking/adjusting the air pressure

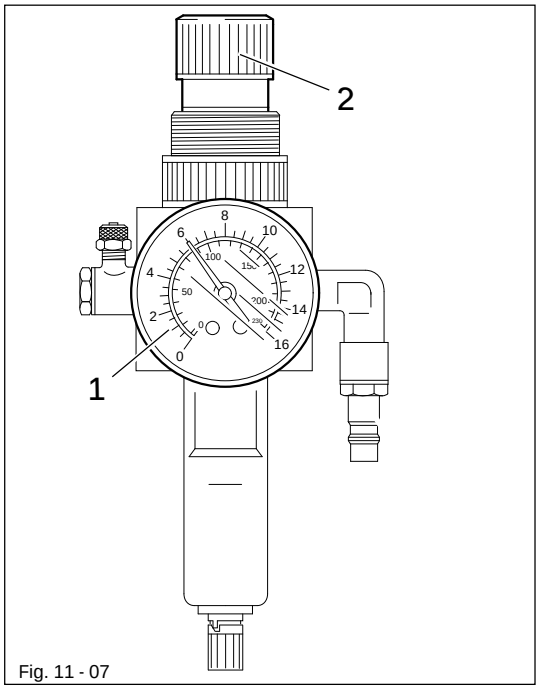

Fig. 11 - 07

- Before operating the machine, always check the air pressure on gauge 1.
- Gauge 1 must show a pressure of 6 bar.
- If necessary adjust to this reading.
- To do so, pull knob 2 upwards and turn it so that the gauge shows a pressure of 6 bar.

12 Adjustment

12.01 Notes on adjustment

All following adjustments are based on a fully assembled machine and may only be carried out by expert staff trained for this purpose.
Machine covers, which have to be removed and replaced to carry out checks and adjustments, are not mentioned in the text.
The order of the following chapters corresponds to the most logical work sequence for machines which have to be completely adjusted. If only specific individual work steps are carried out, both the preceding and following chapters must be observed.
Screws, nuts indicated in brackets ( ) are fastenings for machine parts, which must be loosened before adjustment and tightened again afterwards.



The machine must be switched off for all adjustment work!
Danger of injury if the machine is started accidentally!

12.02 Tools, gauges and other accessories for adjusting

- 1 set of screwdrivers with blade widths from 2 to 10 mm
- 1 set of wrenches with jaw widths from 7 to 14 mm
- 1 set of Allan keys from 1.5 to 6 mm
- 1 metal rule, (Part No. 08-880 218-00)
- Locking pin (5 mm diameter), part no. 13-030 341-05
- Feed dog adjustment gauge, part no. 91-119 995-05
- Hook bearing adjustment gauge, part no. 91-119 996-05
- Needles, threads and test material

12.03 Abbreviations

TDC = top dead center
BDC = bottom dead center

12.04 Check and adjustment aid

By blocking with holes 1 - 5 the required needle bar positions can be fixed exactly.

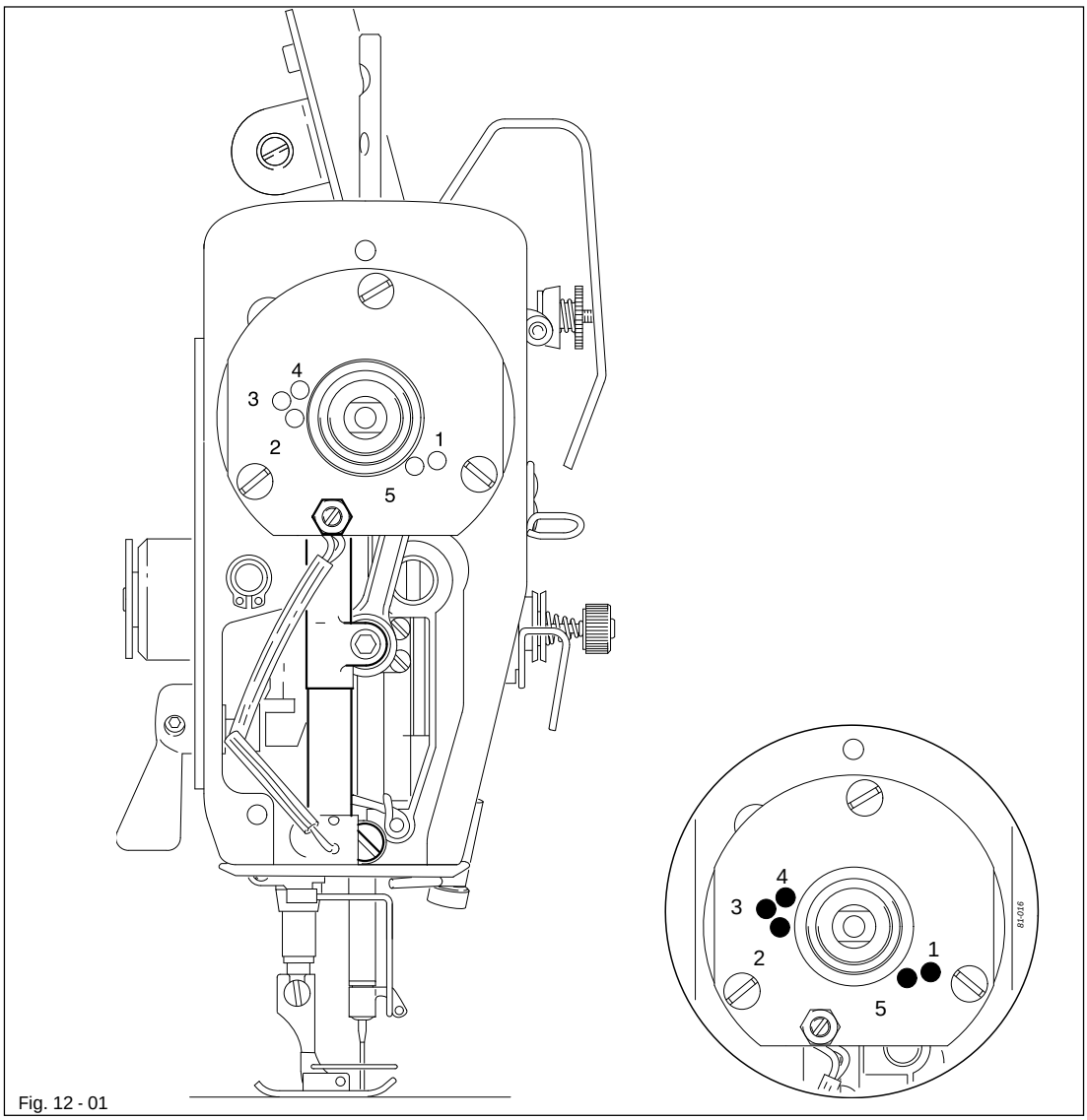

Fig. 12 - 01

- Turn the balance wheel until the needle bar has approximately reached the required position.
- Place the 5 mm blocking pin in the appropriate hole and put pressure on it.
- Turn the balance wheel forwards and backwards a little until the blocking pin moves into the slot in the crank behind the bearing plate, thus blocking the machine.

Hole 1	=	2.0 mm after the bottom dead center of the needle bar (2.0 past tdc)
Hole 2	=	Top dead center of the needle bar (tdc)
Hole 3	=	0.25 mm after the top dead center of the needle bar (0.25 past bdc)
Hole 4	=	1.0 mm after the top dead center of the needle bar (1.0 mm past tdc)
Hole 5	=	4 mm after the bottom dead center of the needle bar (4.0 past bdc)

12.05 Adjusting the basic machine

12.05.01 Balancing weight

Requirement
With the needle bar at bdc the largest eccentricity of the balancing weight 1 must be pointing upwards.

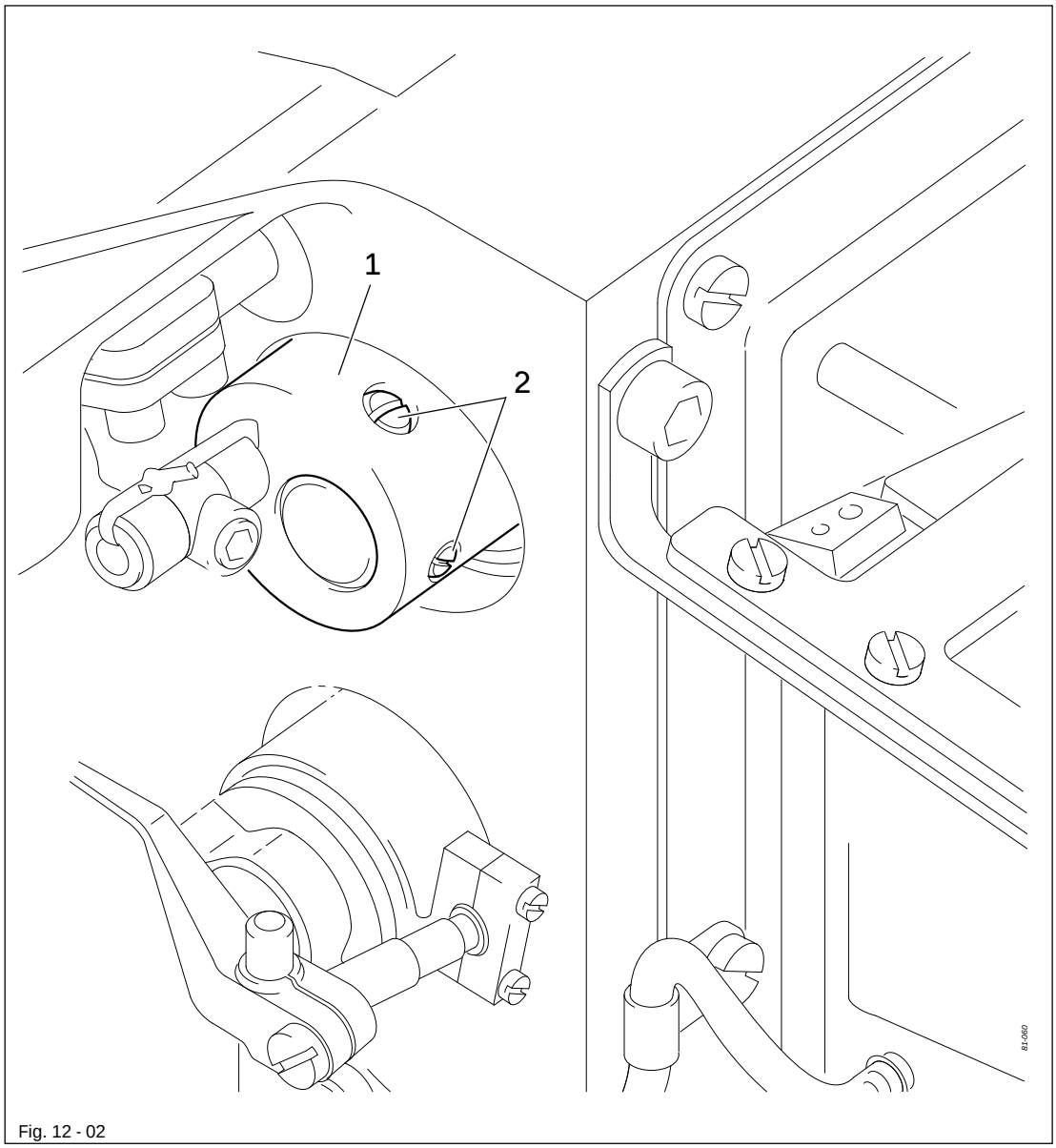

Fig. 12 - 02

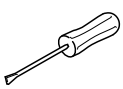

- Bring the needle bar to b.d.c.
- Adjust the balance weight 1 (screw 2) in accordance with the requirement.

12.05.02 Centering the needle in the needle hole (in sewing direction)

Requirement
With the zigzag setting at "0" and the needle position set at "middle" the needle must enter the center of the needle hole as viewed in the direction of sewing.

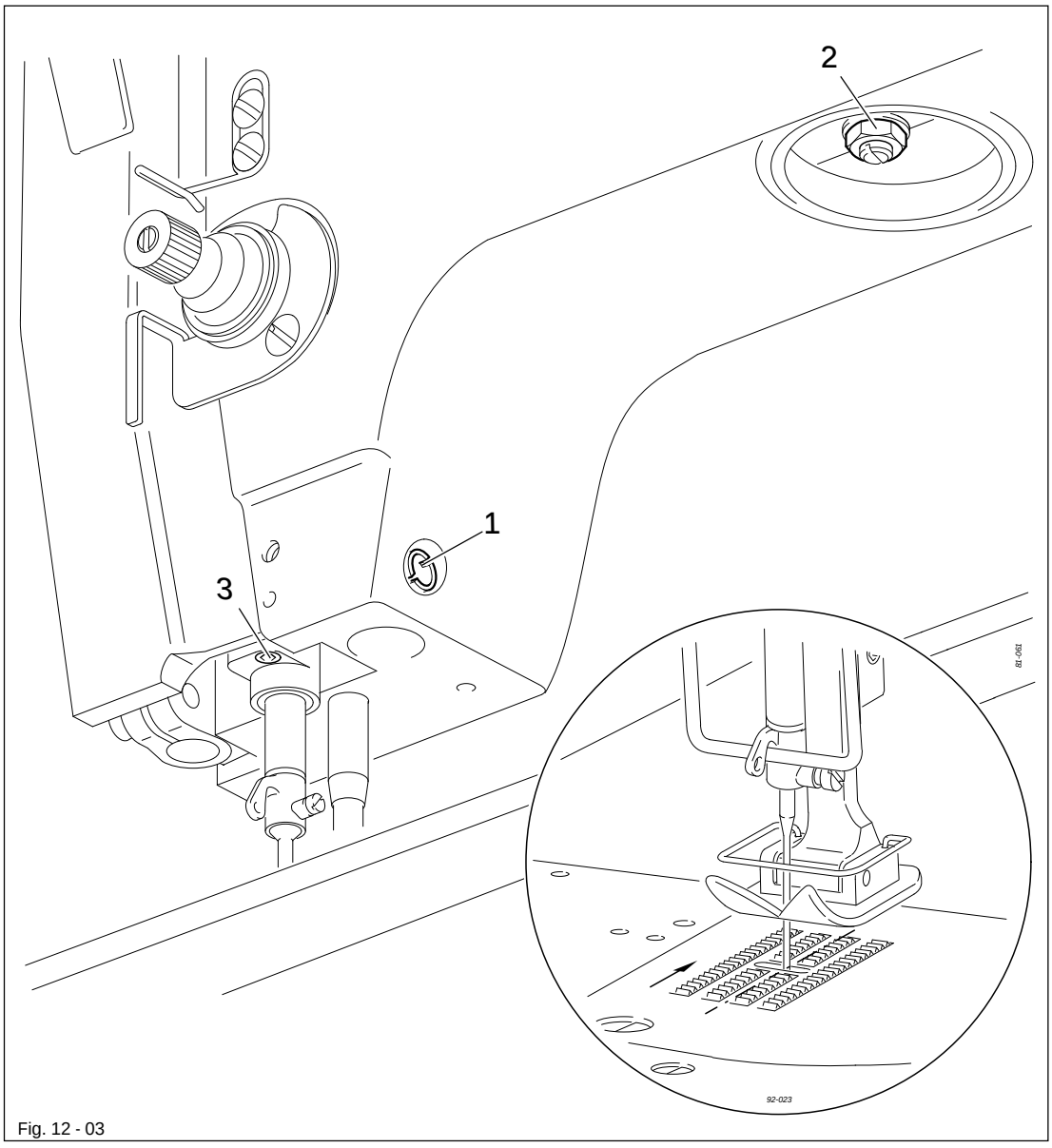

Fig. 12 - 03

- Bring the needle bar to b.d.c.
- Adjust the eccentric pin 1 (nut 2 and screw 3) in accordance with the requirement.

12.05.03 Parallel guiding of the needle bar

Requirement
Guide bar 5 must be parallel to the needle bar.

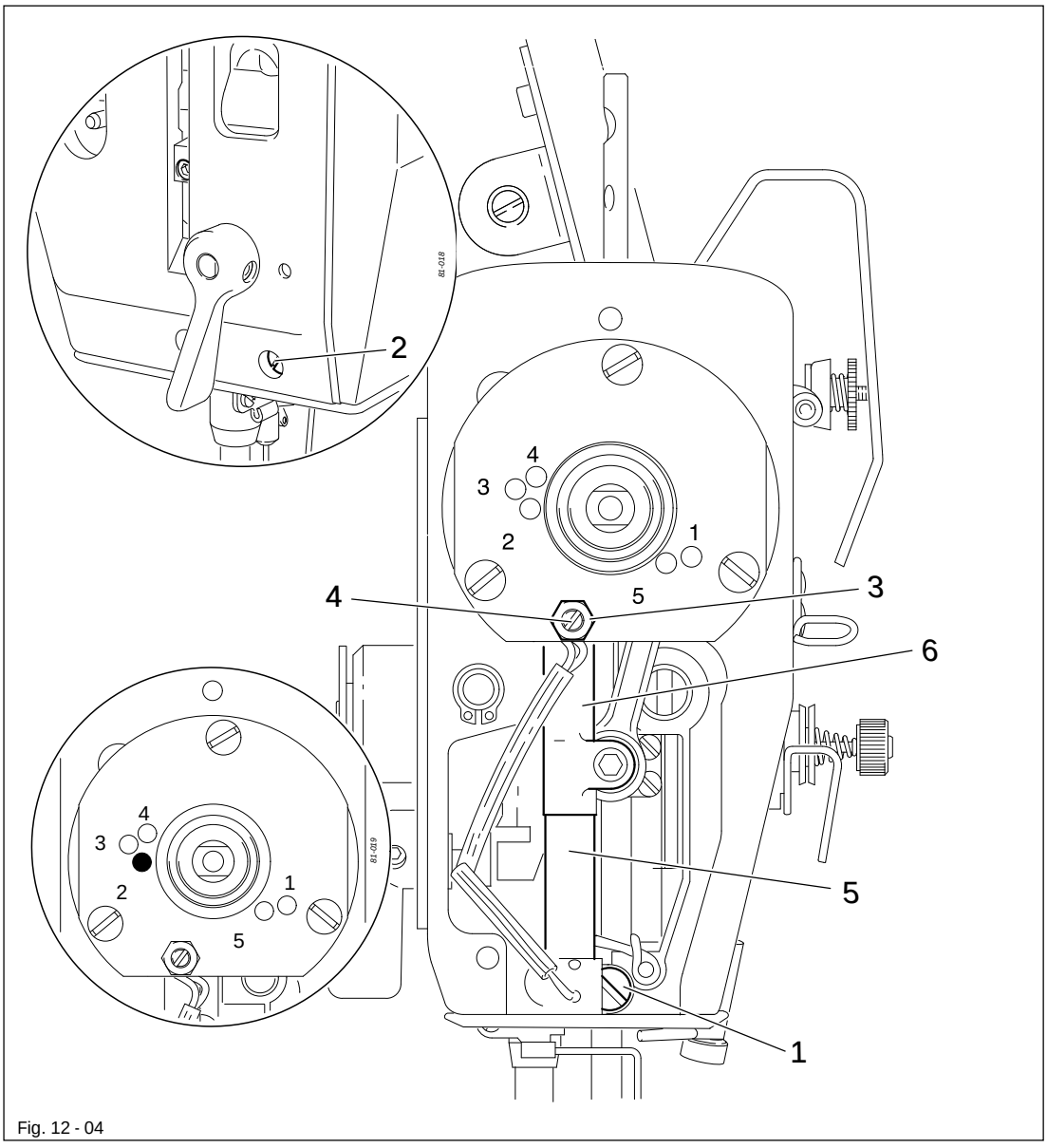

Fig. 12 - 04

- Bring the needle bar to tdc (hole 2).
- Loosen screws 1,2 and nut 3.
- The largest eccentricity of pin 4 must be facing downwards.
- Bring the groove on guide bar 5 into a position in which it rests against eccentric pin 4, turn eccentric pin 4 in accordance with the requirement and tighten nut 3.
- Push guide bar 5 downwards and then upwards as far as possible. Bushing 6 must not move laterally during this movement (readjust eccentric pin 4 if necessary).
- Move guide bar 5 until it rests against eccentric pin 4 and tighten screws 1 and 2.

12.05.04 Locking lever

Requirement
The zigzag stitch adjustment lever 3 must be able to be locked in any position.

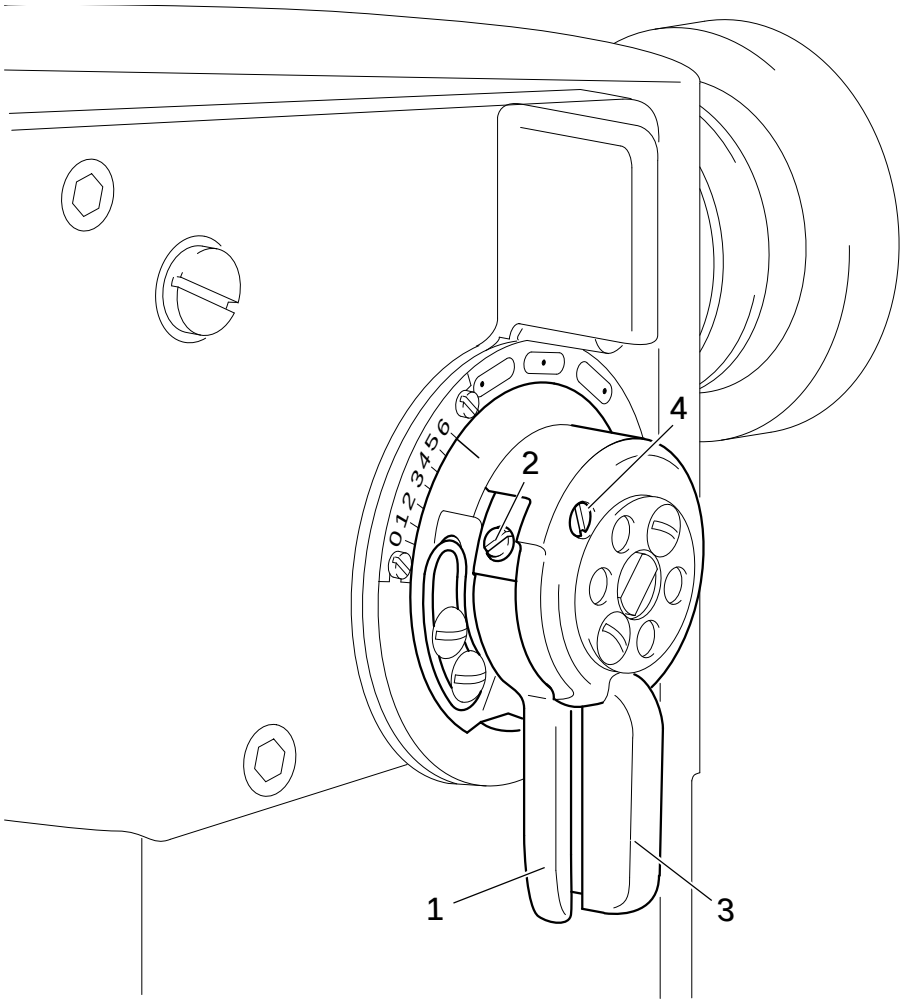

Fig. 12 - 05

- Loosen screw 2.
- Press locking lever 1 against the zigzag stitch adjustment lever 3.
- Turn pivot pin 4 as far as possible to the left.
- Release locking lever 1.
- Locking lever 1 must be parallel to the zigzag stitch adjustment lever 3.
- Tighten screw 2.

12.05.05 Zero stitch and zigzag stitch scale

Requirement

With the zigzag stitch set at "0":

1. the needle bar must not move laterally when the balancewheel is turned and
2. the marking "0" on scale 1 must be at marking 2.

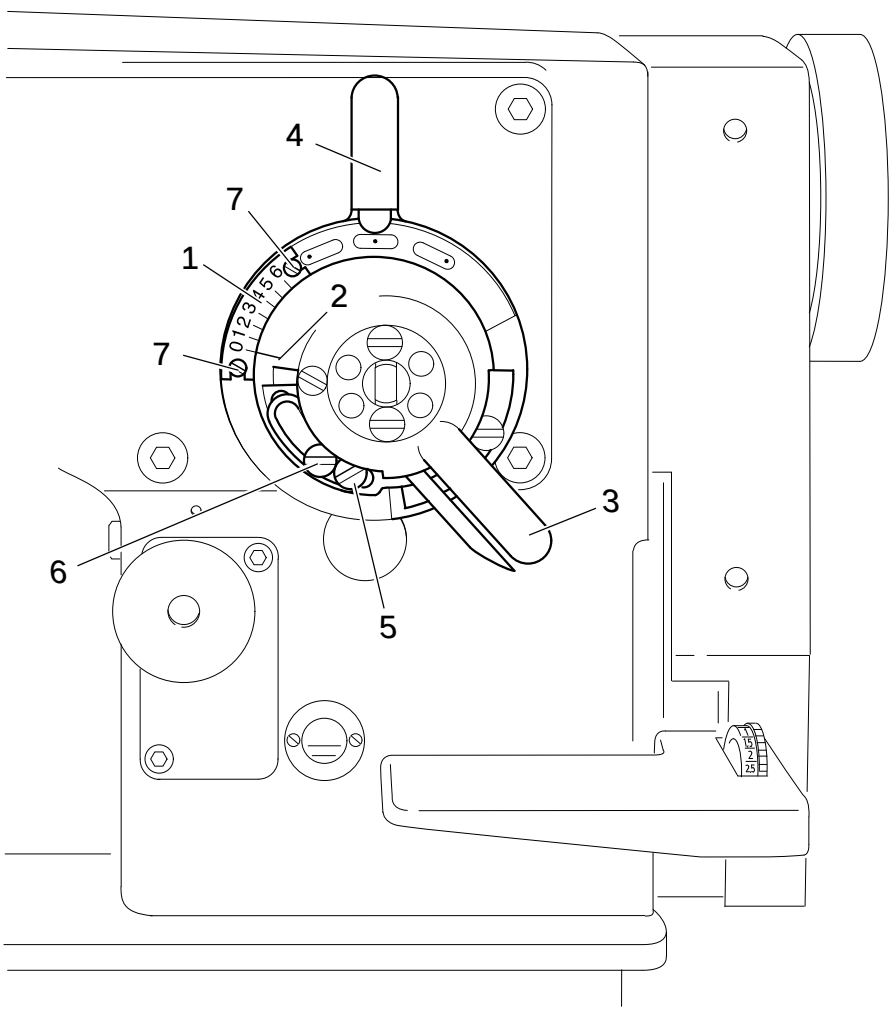

Fig. 12 - 06

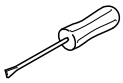

- Set the needle position adjustment lever 4 to "middle" and loosen screws 5 and 6.
- Run the machine slowly and turn the zigzag stitch adjustment lever 3 to the right until the needle bar no longer moves laterally.
- Turn the machine off. Move screw 5 to the right until it touches and then tighten it.
- Loosen screws 7 and move scale 1 in accordance with requirement 2.
- Tighten screws 7.

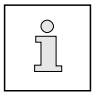

Screw 6 remains loose for the following adjustment.

12.05.06 Centering the needle in the needle hole (crosswise to sewing direction)

Requirement
With the zigzag stitch set at "0" and the needle position setting at "middle" the needle must enter the center of the needle hole as seen across the direction of sewing.

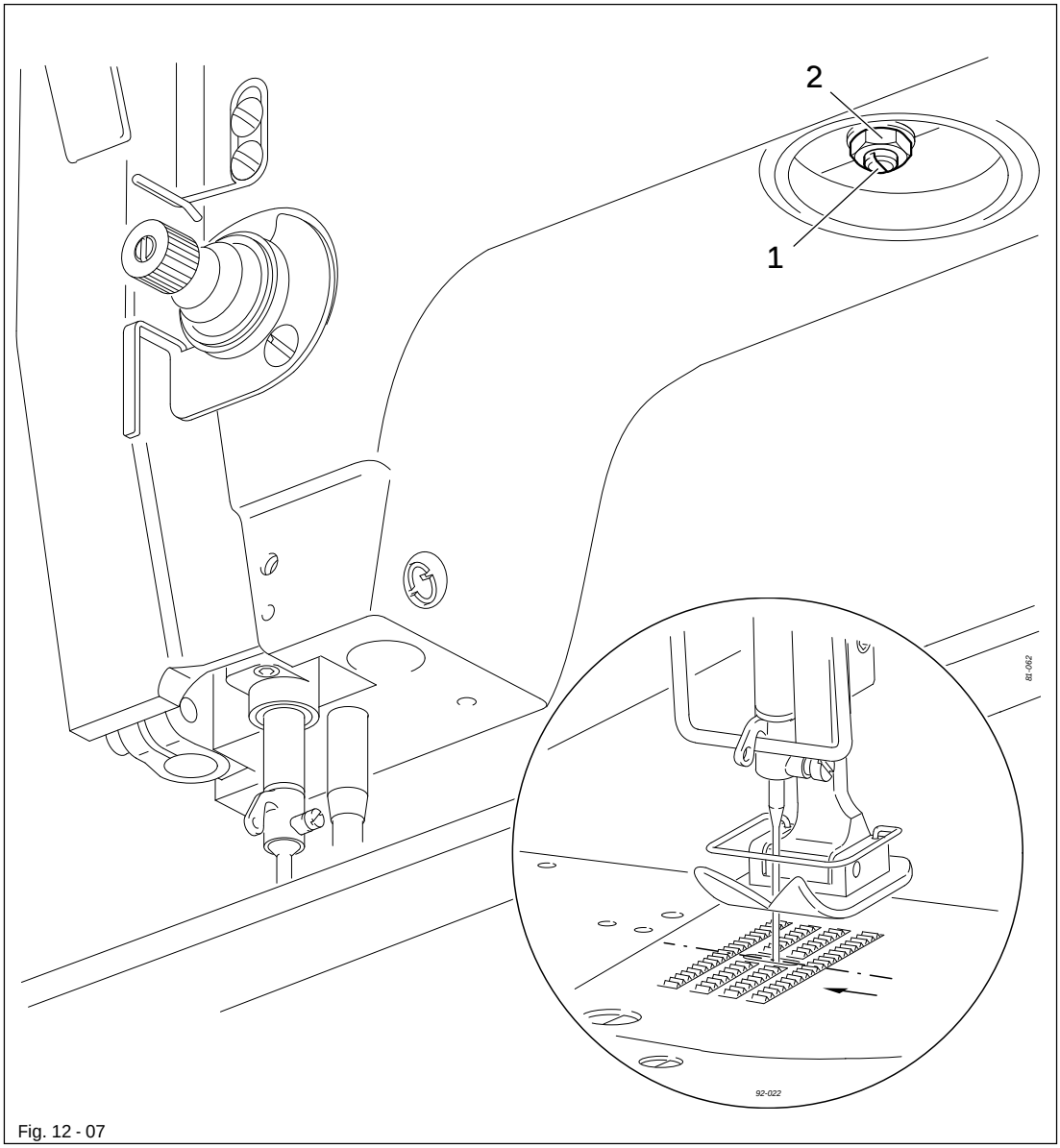

Fig. 12 - 07

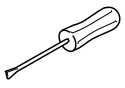

- Adjust the eccentric pin 1 (nut 2) in accordance with the requirement.

12.05.07 Zigzag stitch width

Requirement
At the largest zigzag stitch setting, marking 1 must be at the largest zigzag value on scale 2.

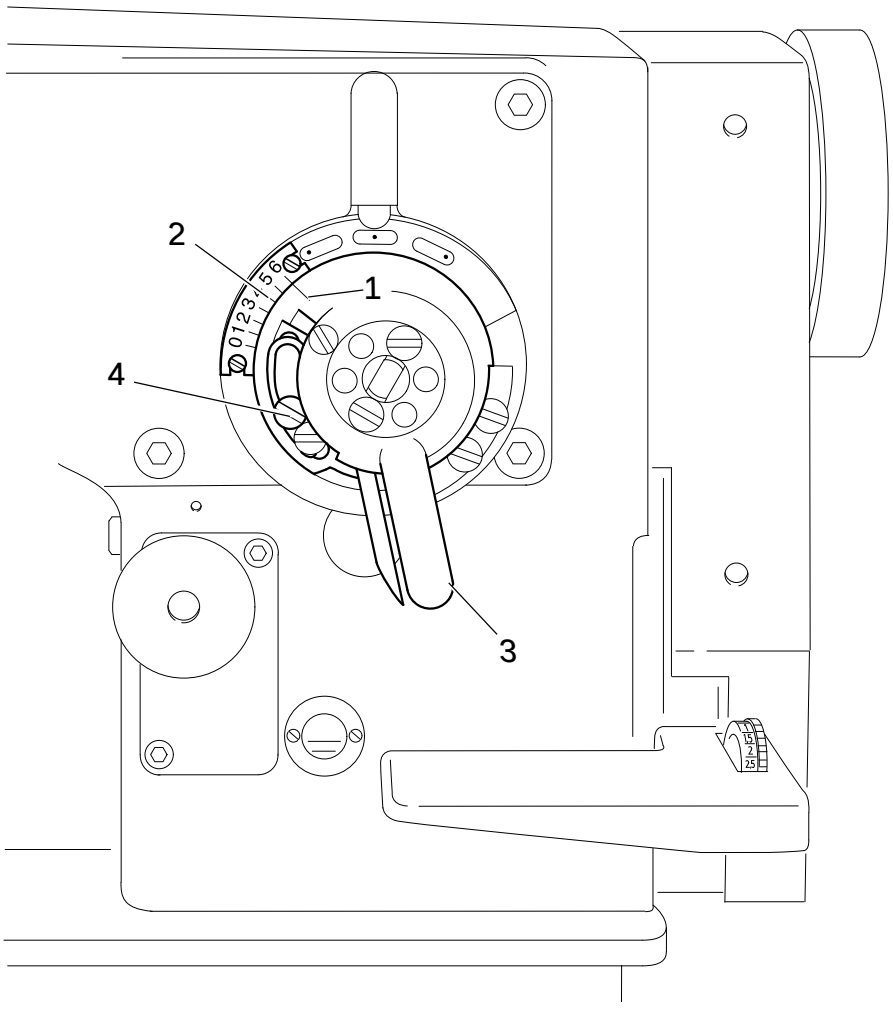

Fig. 12 - 08

- Turn the zigzag stitch adjustment lever 3 in accordance with the requirement.
- Move screw 4 upwards until it touches and then tighten it.

If the machine is equipped with a needle plate with a smaller hole than is marked on the scale, the zigzag limit must be set according to the needle hole width on the needle plate.

12.05.08 Multi-stitch movement

Requirement

1. When the needle, at its b.d.c., penetrates on the right-hand side, the recess 5 on the control cam 3 should be positioned horizontally towards the rear.
2. The lateral movement of the needle bar should have been completed when the needle penetrates the workpiece (carry out a check with the largest zigzag setting).

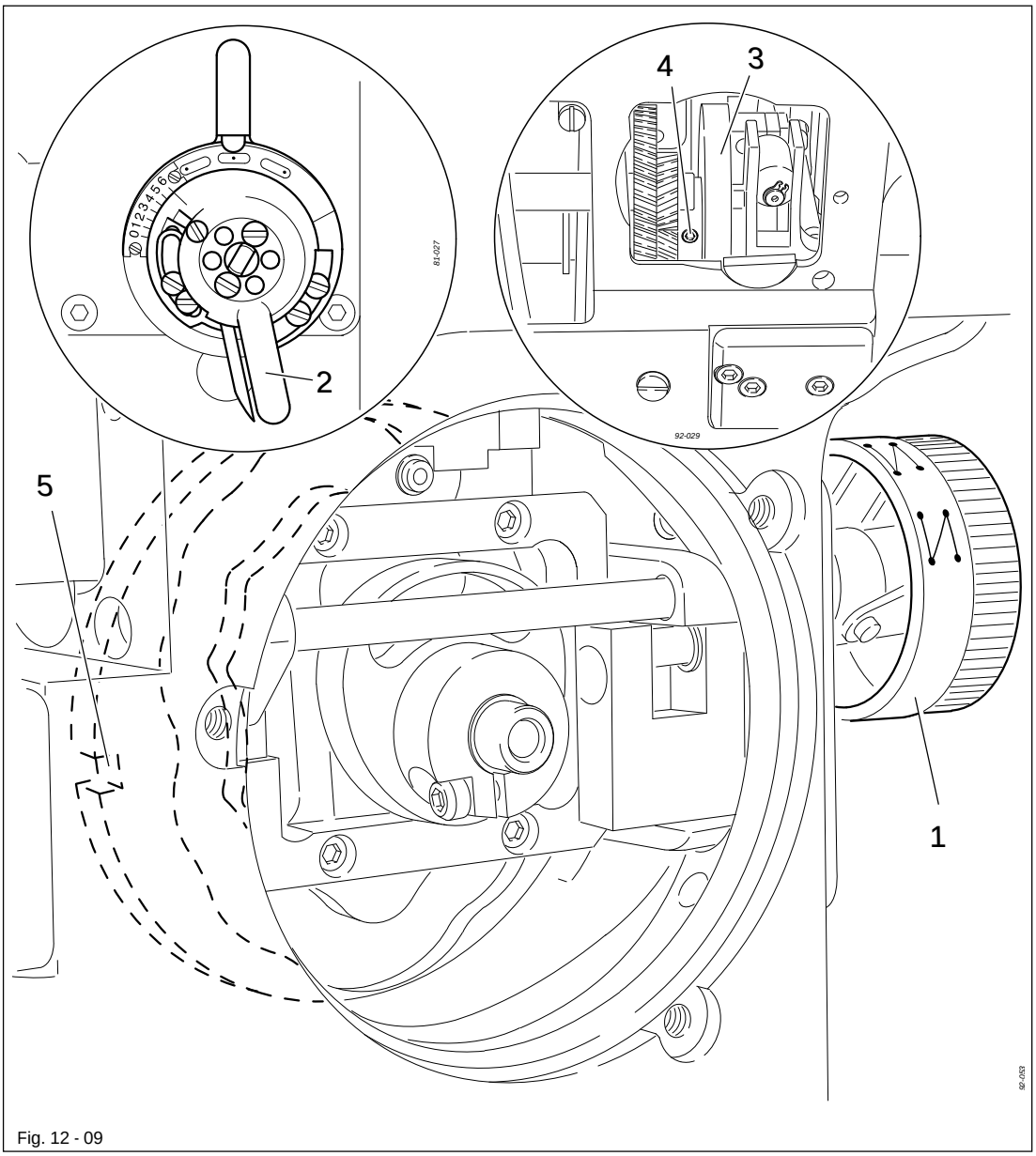

Fig. 12 - 09

- Set the adjustment wheel 1 at multi-stitch.
- Set the zigzag stitch width lever 2 at "largest zigzag width".
- Adjust control cam 3 (screws 4) in accordance with the requirement.

12.05.09 Zigzag movement

Requirement

When the needle bar, moving from its right b.d.c., reaches its t.d.c. (hole 2), it should not carry out any lateral motion when the zigzag stitch width lever 4 is moved to and fro.

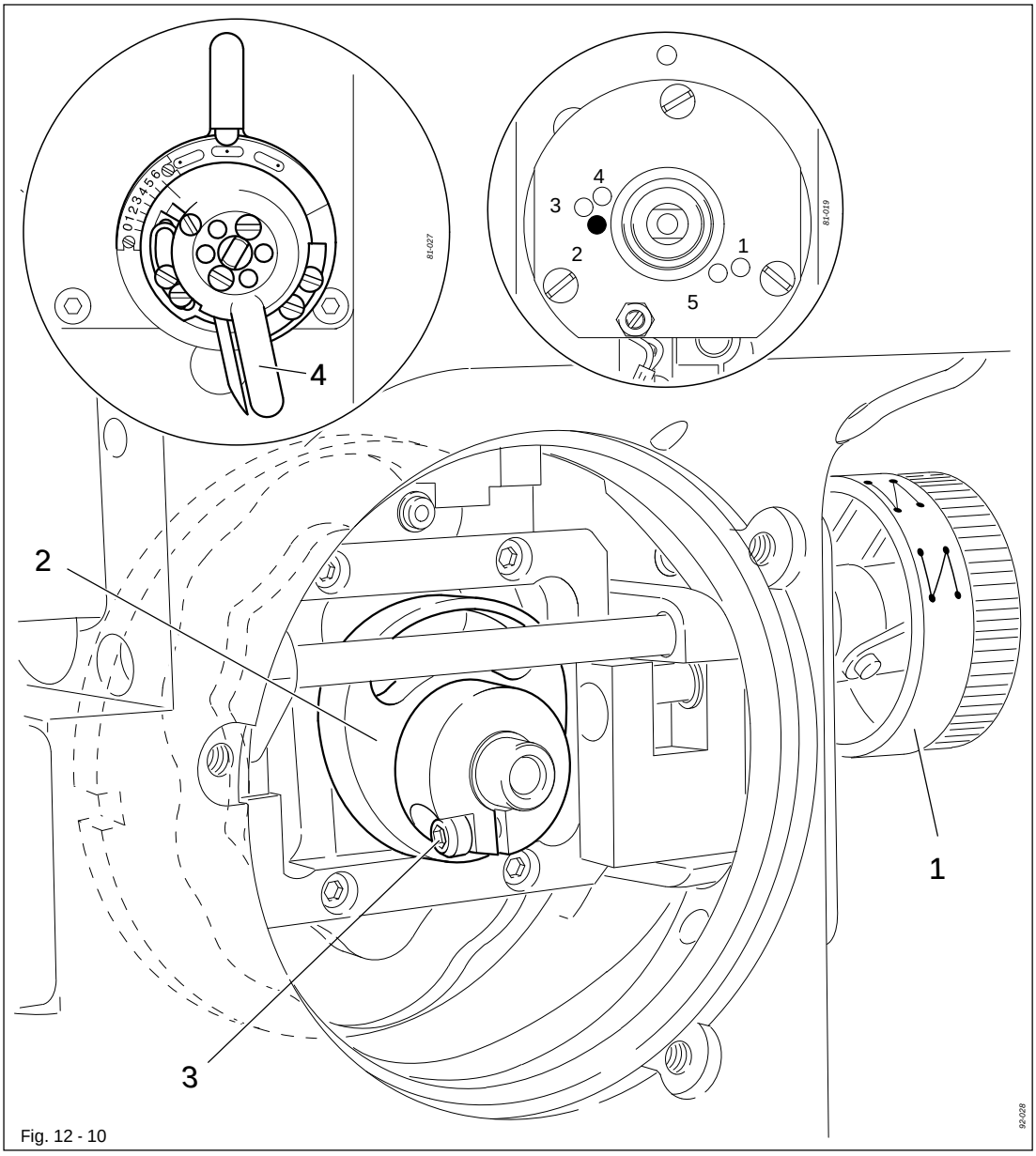

Fig. 12 - 10

- Set the adjustment wheel 1 at zigzag.
- Adjust the zigzag eccentric 2 (screw 3) in accordance with the requirement.

12.05.10 Target positioning sensor

Requirement
There should be a clearance of 0.2 – 0.3 mm between sensor 1 and control cam 3.

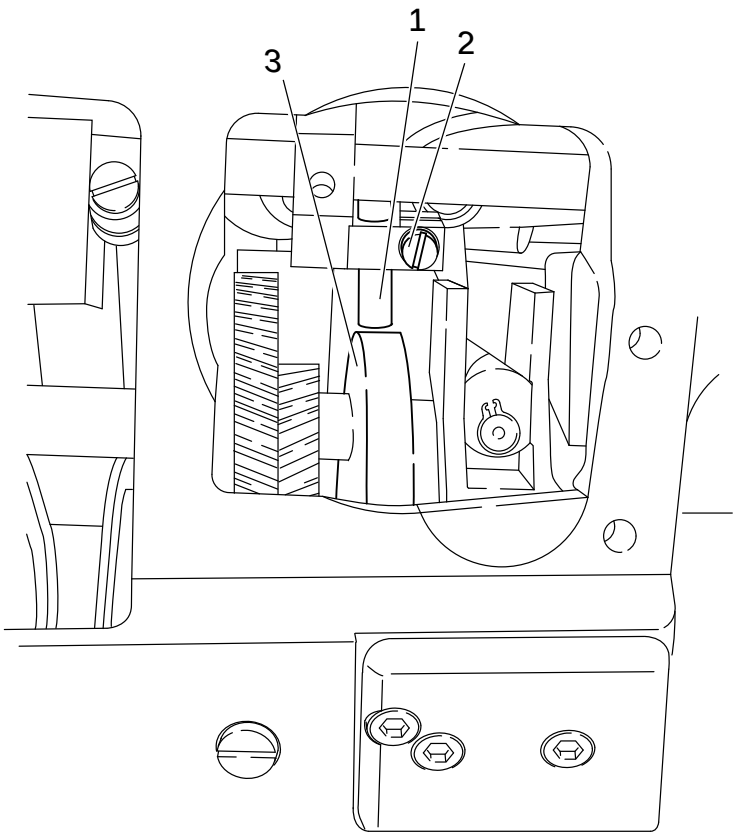

Fig. 12 - 11

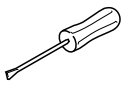

- Adjust sensor 1 (screws 2) in accordance with the requirement.

12.05.11 Needle position adjustment lever

Requirement
The left and right throws of the needle must be the same size at the largest zigzag stitch setting and at the left or right needle position.

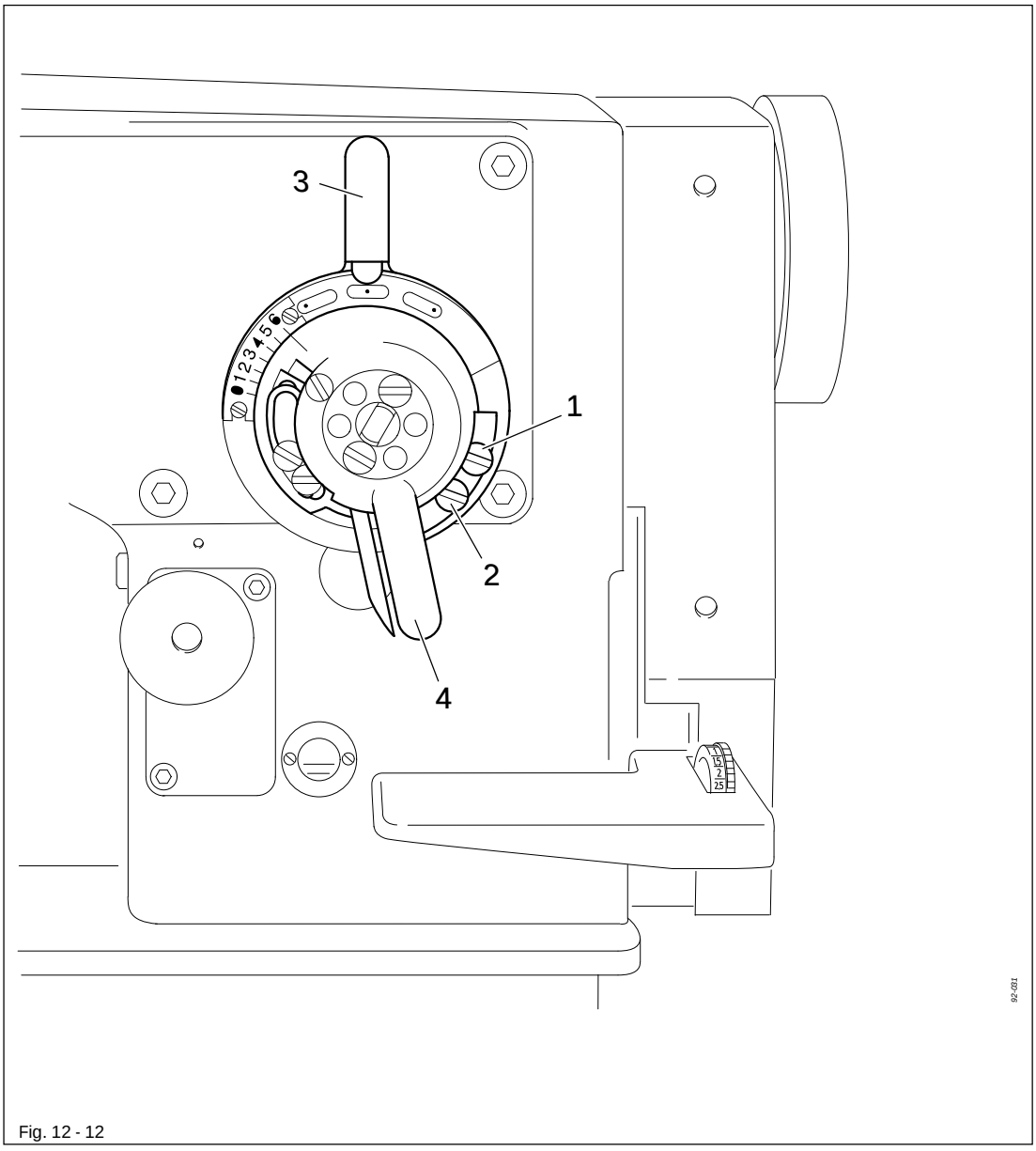

Fig. 12 - 12

- Loosen screws 1 and 2.
- Set the needle position adjustment lever 3 to "middle" and the zigzag stitch adjustment lever 4 at the largest zigzag stitch.
- Place a piece of paper underneath the presser foot and perforate it to the left and right with the needle.
- Set the zigzag stitch adjustment lever 4 at "0" and move the needle position adjustment lever 3 to the right/left until the needle is exactly over the perforations made in the last step.
- For the left needle-position bring screw 1 to a position where it touches and tighten it and for the right needle-position do the same with screw 2.

12.05.12 Zero position of the bottom feed dog (with closed gear box)

Requirement
With the stitch length set at "0", the bottom feed dog should not carry out any feeding motion when the balance wheel is turned.

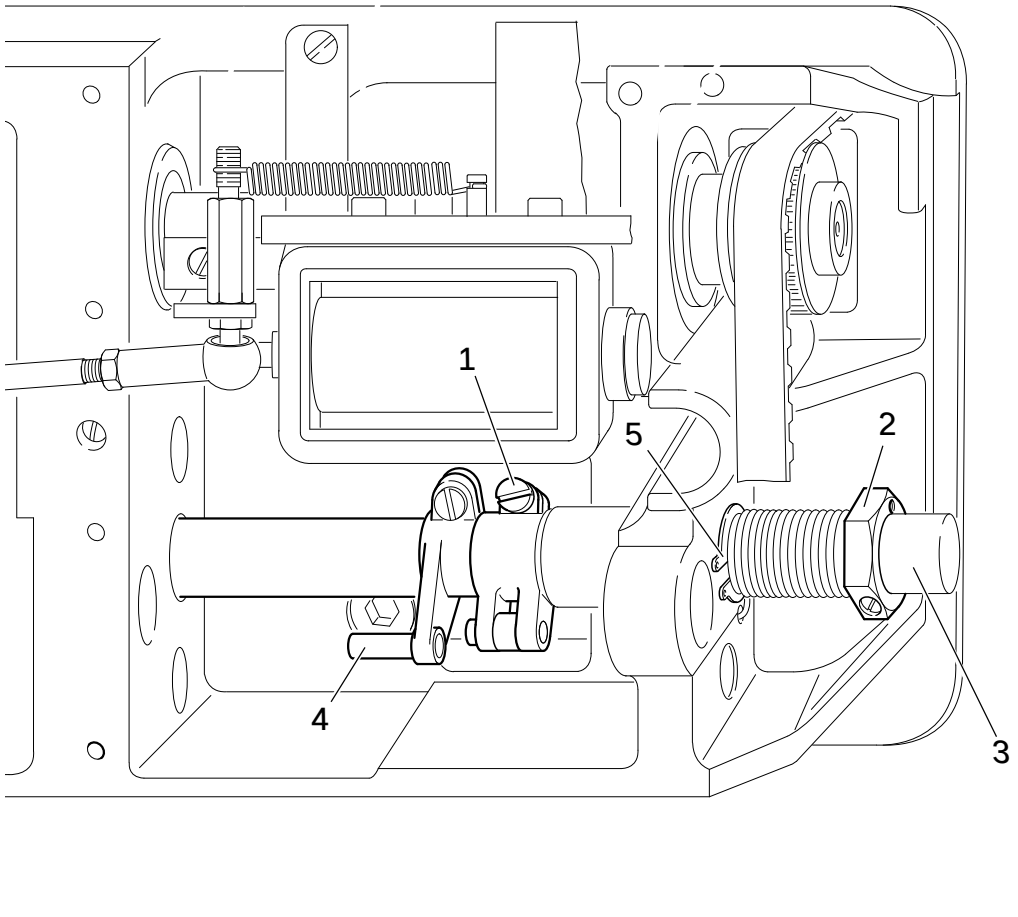

Fig. 12 - 13

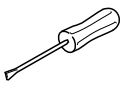

- Loosen screw 1.
- Fit the fork wrench (SW 27) to the spring clamp ring 2 using it to hold the regulating shaft 3.
- While continually turning the balance wheel, adjust the fork wrench on the spring clamp ring 2 in accordance with the requirement.
- In this position move adjusting crank 4 and ring 5 against the metal frame and tighten screw 1.
- Carry out a check in accordance with the requirement.

12.05.13 Zeroing the bottom feed (with open gearbox)

Requirement
With the stitch length set at "0" the bottom feed dog must not carry out any feeding motion when the balance wheel is turned.

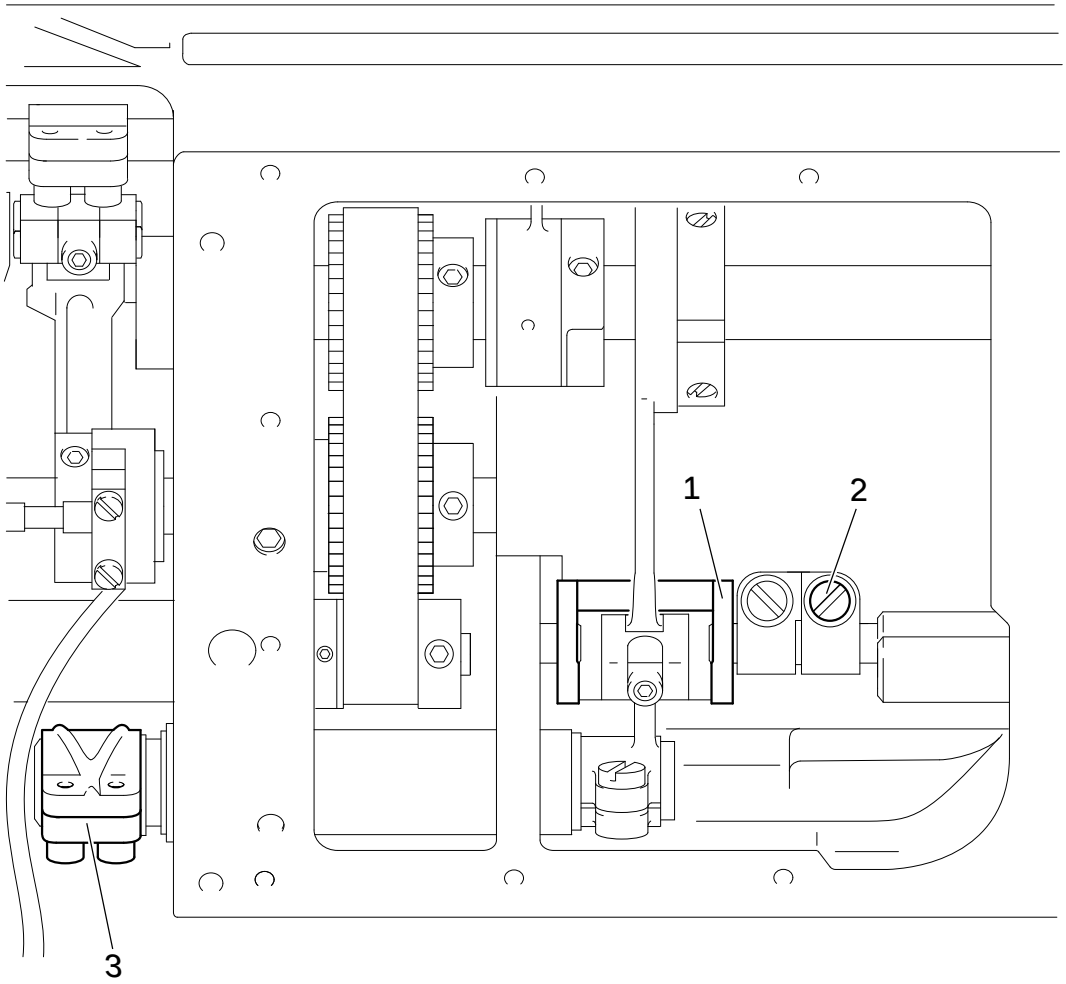

Fig. 12 - 14

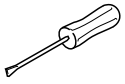

- Switch on the machine.
- While continuously turning the balance wheel, adjust reversing crank 1 (screw 2) in accordance with the requirement.
- Switch off the machine.

12.05.14 Feeding motion of the bottom feed dog

Requirement
With the maximum stitch length set and the needle bar position 1.0 past tdc (hole 4), the bottom feed dog must not move when the reverse feed lever is pressed.

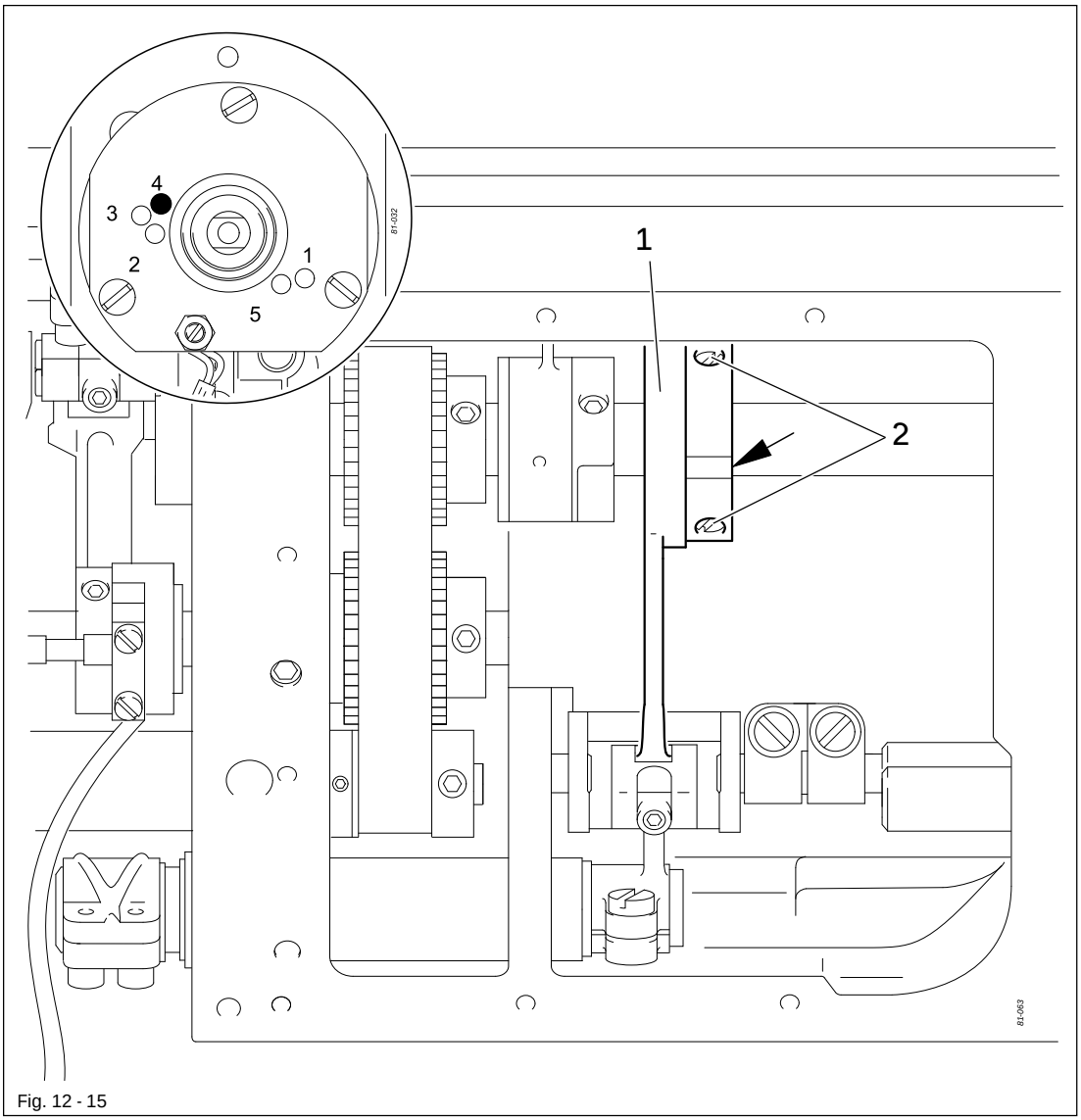

Fig. 12 - 15

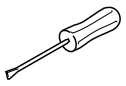

- While continuously operating the reverse feed control, adjust feeding eccentric 1 (screws 2) in accordance with the requirement (the counter-sinking in feeding eccentric 1 must be visible).



An axial displacement of feeding eccentric 1 is not allowed.

12.05.15 Lifting motion of the bottom feed dog

Requirement
With the stitch length set at "0" and the needle bar position at 0.25 mm past tdc (hole 3) the bottom feed dog must be at its upper point of reversal.

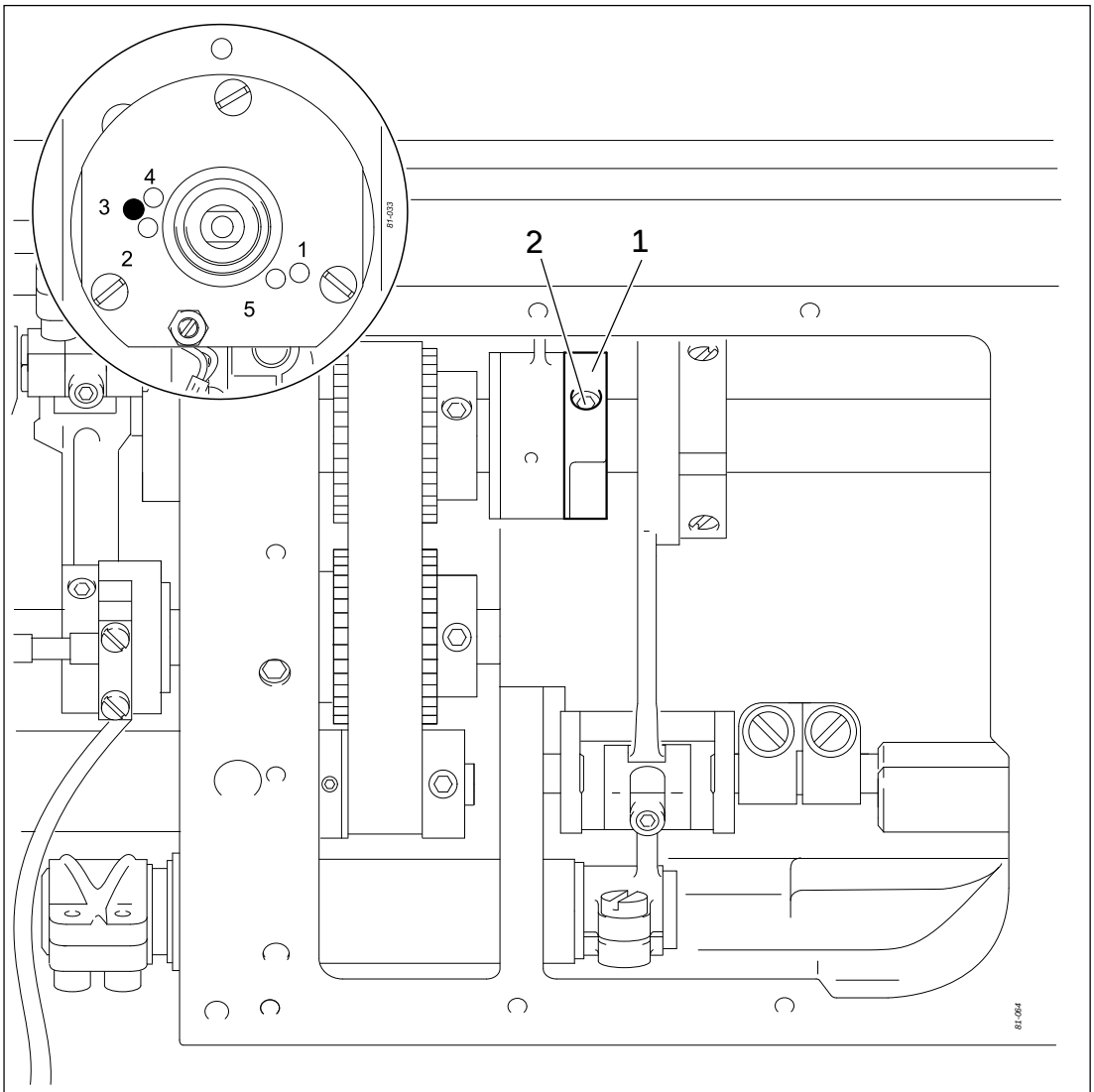

Fig. 12 - 16

- Adjust feed lifting eccentric 1 (screw 2) in accordance with the requirement.

An axial displacement of feed lifting eccentric 1 is not allowed.

12.05.16 Drive belt in the gearbox housing

Requirement
Drive belt 4 must be tightened so that the machine runs freely and the belt sprockets do not have any noticeable play.

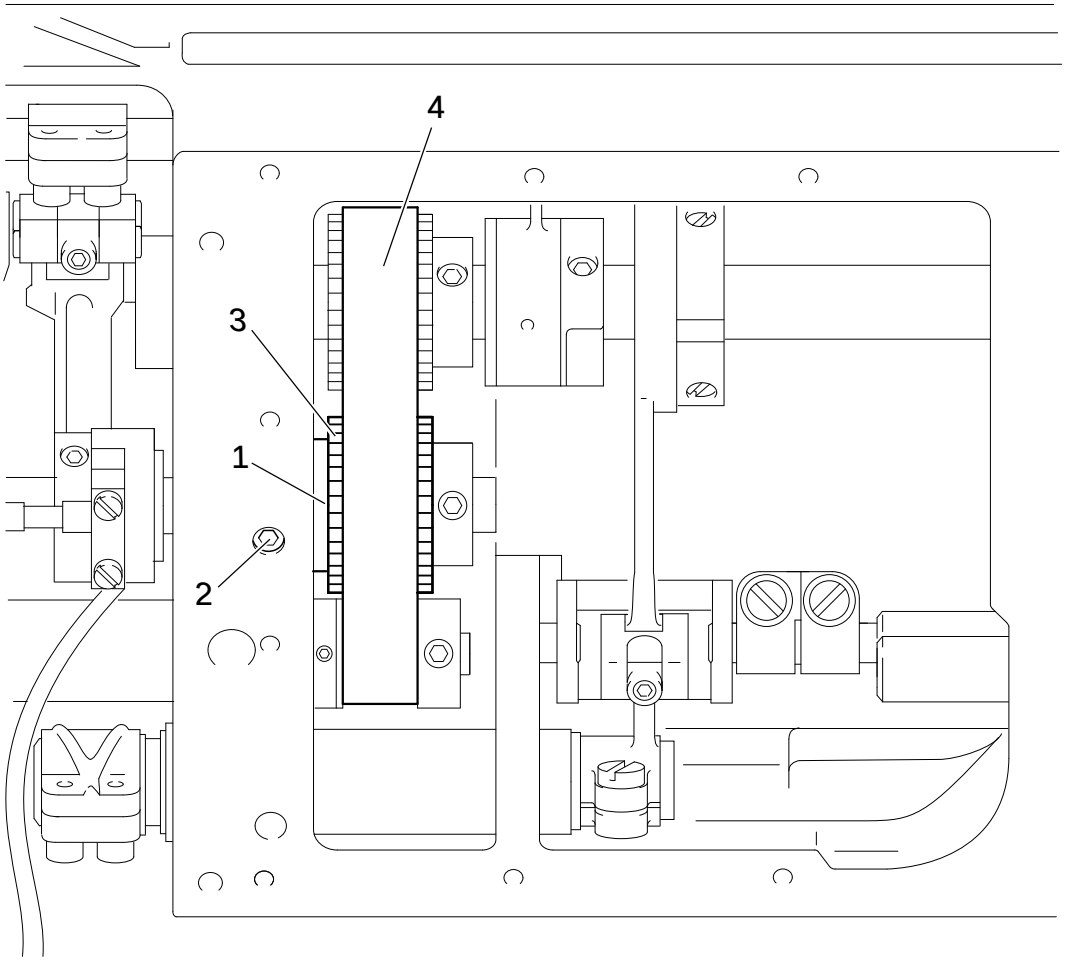

Fig. 12 - 17

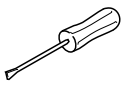

- Adjust eccentric bearing bush 1 (screw 2) in accordance with the requirement and so that drive belt 4 is in the centre of bobbin opener drive wheel 3.

12.05.17 Hook bearing bracket

Requirement
The hook shaft must be touching the hook bearing bracket adjustment gauge 1 at the top and the side.

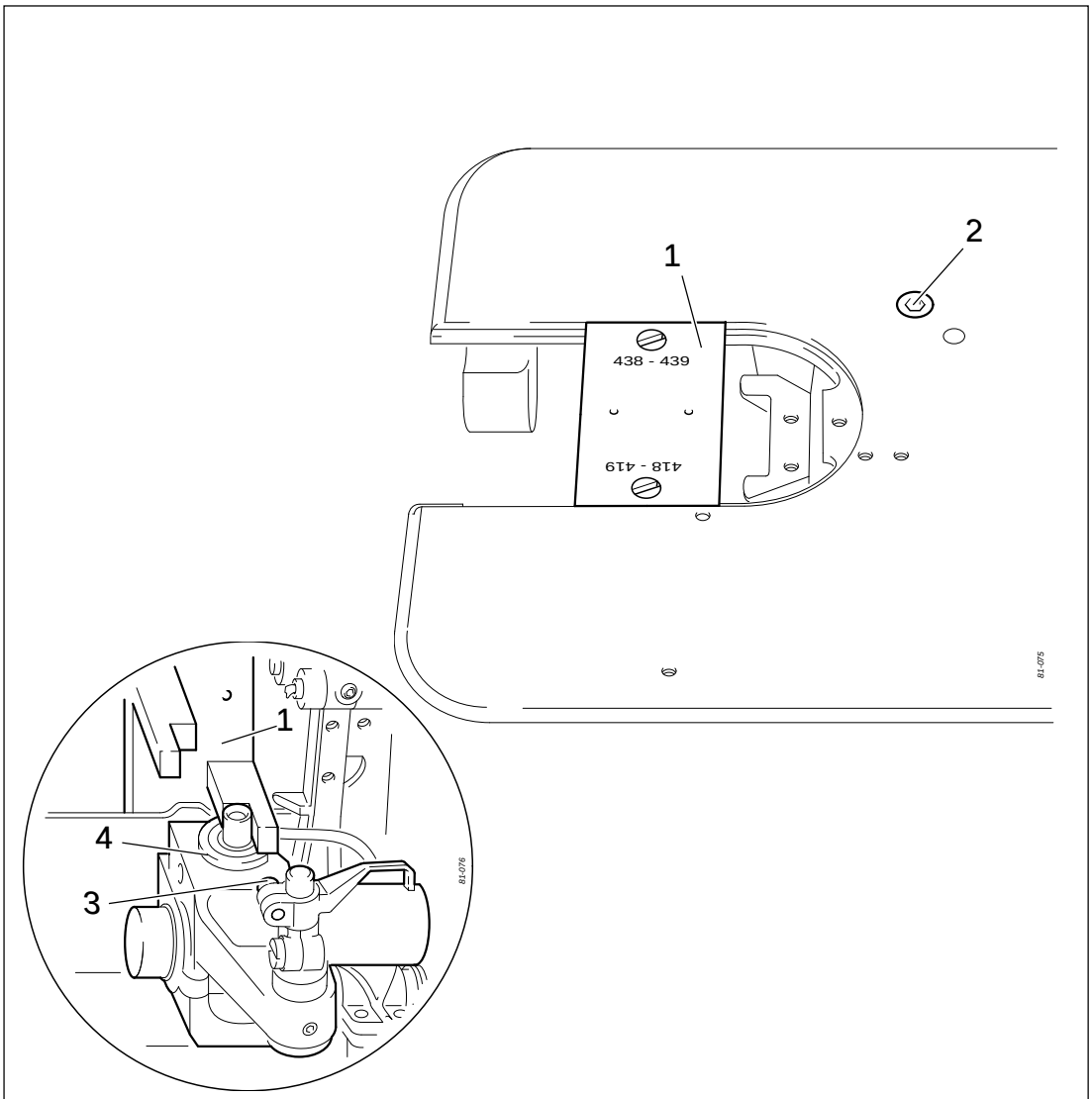

Fig. 12 - 18

- Loosen screw 3.
- Swing the bobbin case opener to the right and remove the hook.
- Loosen screw 2 and loosen the draw key underneath it by lightly tapping the head of the screw.
- Screw on the hook bearing bracket adjustment gauge.
- It must be possible to read the numbers "438-439" from the front.
- Move or turn hook bearing bracket 4 in accordance with the requirement.
- Tighten screw 2.
- Adjust the bobbin case opener in accordance with subsection 12.05.21 Bobbin case opener position.

12.05.18 Hook lubrication

Requirement
When the machine is running at full speed, after about 10 seconds a fine oil streak should be visible on a strip of paper held over the needle plate cutout.

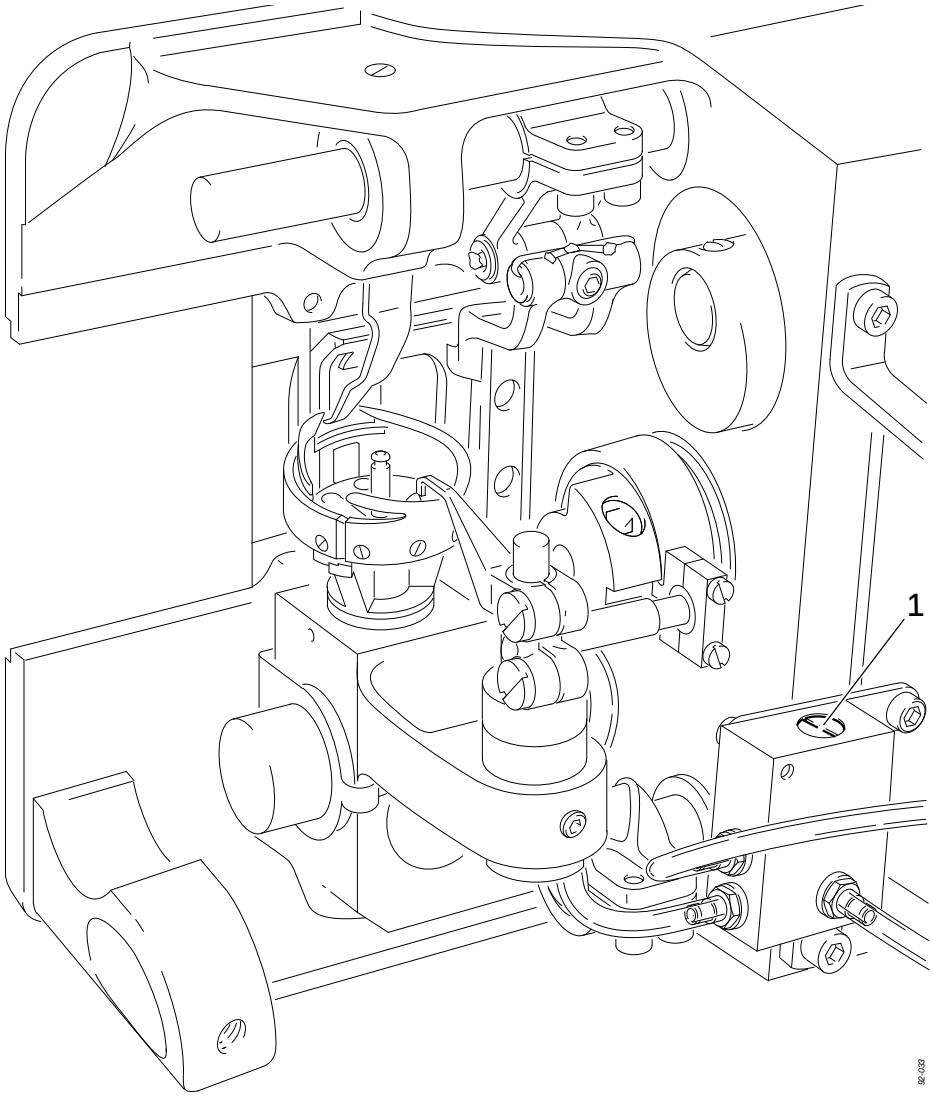

Fig. 12 - 19

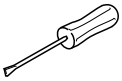

- Adjust screw 1 in accordance with the requirement.

12.05.19 Pre-adjusting the needle height

Requirement
With the needle bar at tdc (hole 2) the distance between the point of the needle and the needle plate must be 19 mm.

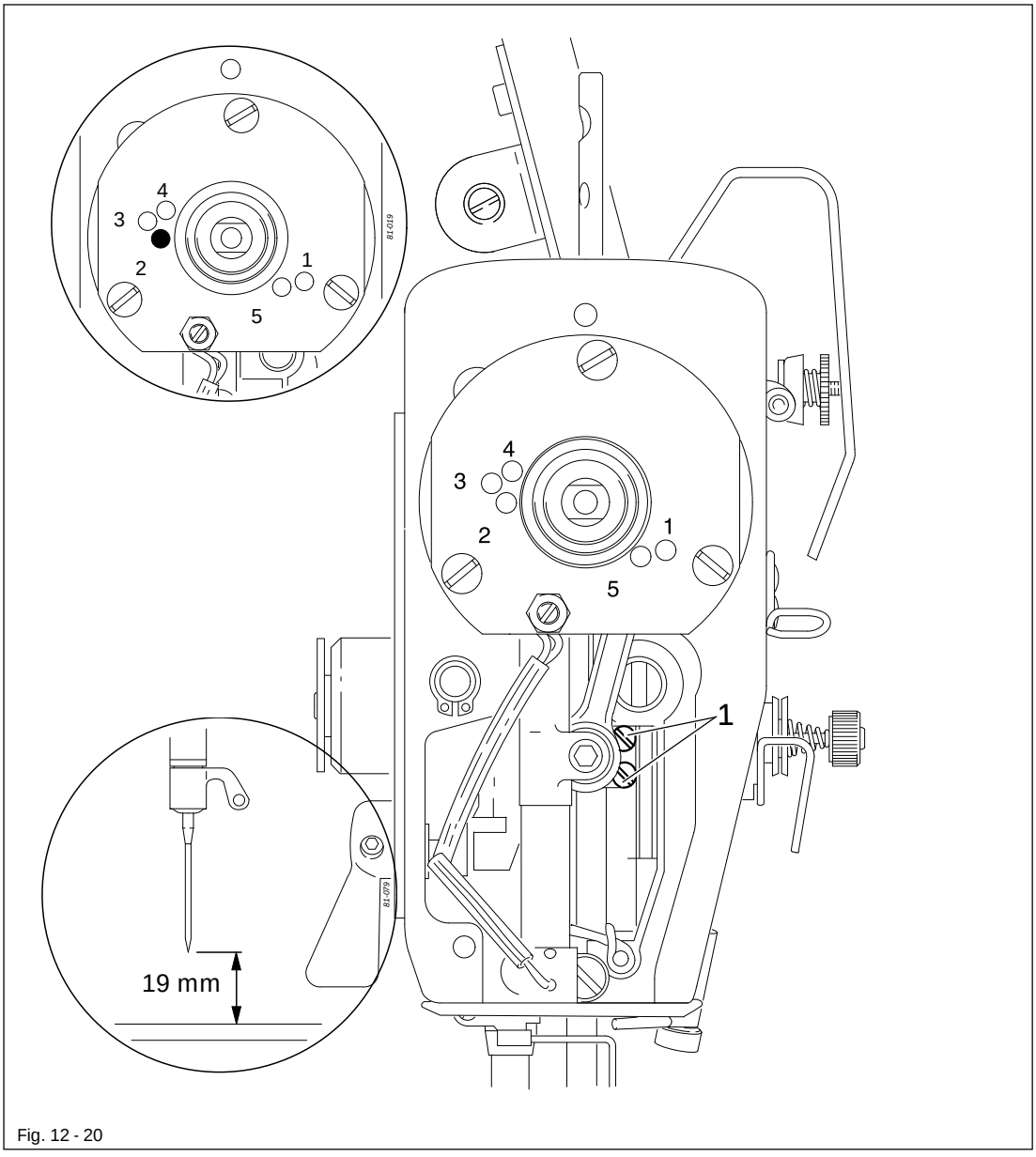

Fig. 12 - 20

- Without turning it, adjust the needle bar (screws 1) in accordance with the requirement.

12.05.20 Needle rise, hook-to-needle clearance and bobbin case positioning-finger

Requirement

1. With the needle position set at "middle", the zigzag stitch setting at "0" and the needle bar position 2.0 past bdc (hole 1) the hook point must be in the middle of the needle and the distance between the needle and the hook point must be 0.05 - 0.1 mm.
2. The bobbin case positioning-finger must be fitted so that there is a clearance of 0.5 mm between the bottom section of the bobbin case and the front edge of the bobbin case positioning-finger (see arrow).

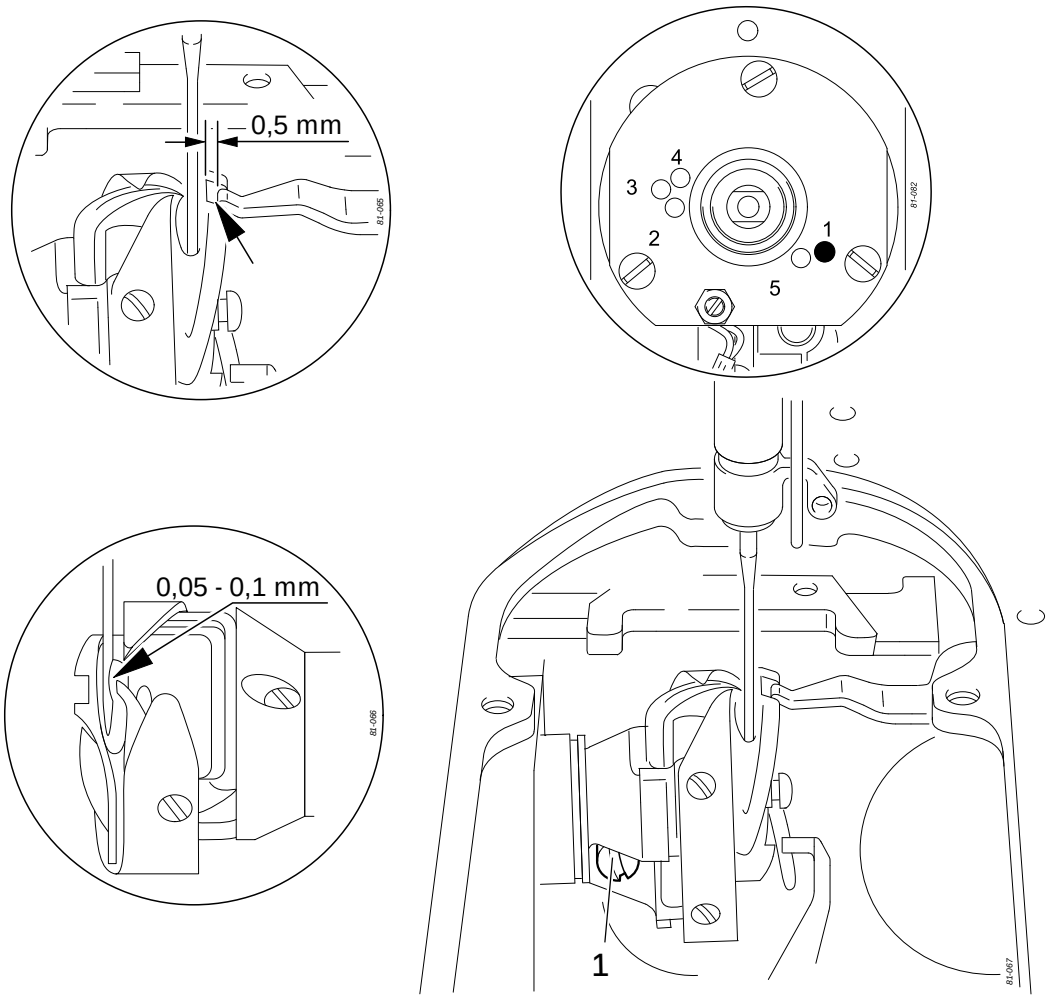

Fig. 12 - 21

- Adjust the hook (screw 1) in accordance with requirement 1.
- Fit the bobbin case position stop in accordance with requirement 2.

12.05.21 Final adjustment of the needle height

Requirement
With the zigzag stitch set at "0", the needle position set at "left" and the hook point in the middle of the needle, the top edge of the needle eye must be 0.5 mm underneath the hook point.

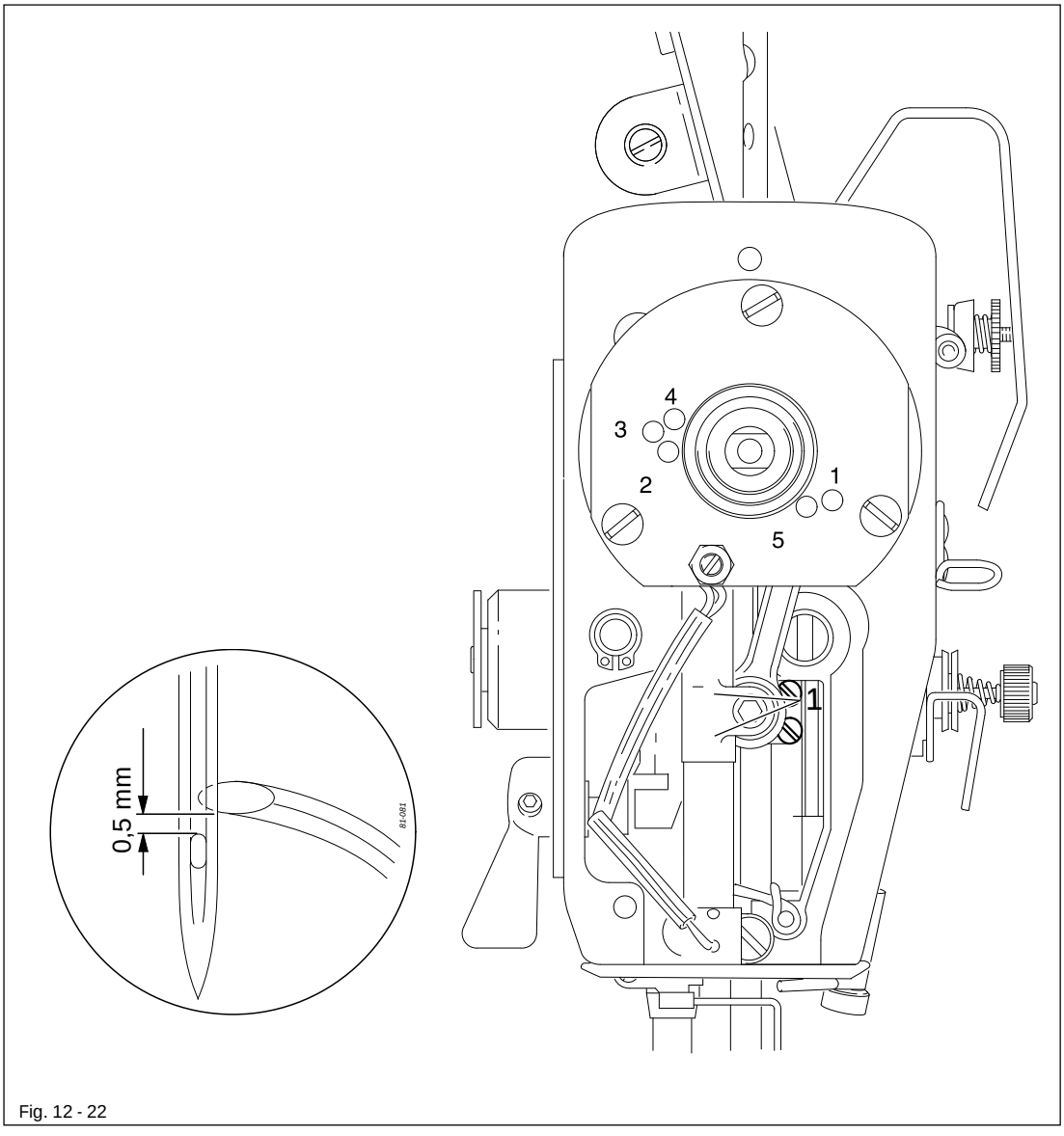

Fig. 12 - 22

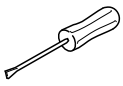

- Without turning it, adjust the needle bar (screws 1) in accordance with the requirement.

12.05.22 Bobbin case opener position

Requirement

1. There must be a clearance of 0.5 mm between the top edge of the bobbin case opener and the inner edge of the bottom section of the bobbin case.
2. Between the bobbin case opener finger and the bottom section of the bobbin case opener there must be a clearance of 0.8 mm.
3. At the left point of reversal of the bobbin case opener the bobbin case positioning-finger must be approx. 0.3 mm from the right side of the groove in the bottom section of the bobbin case.

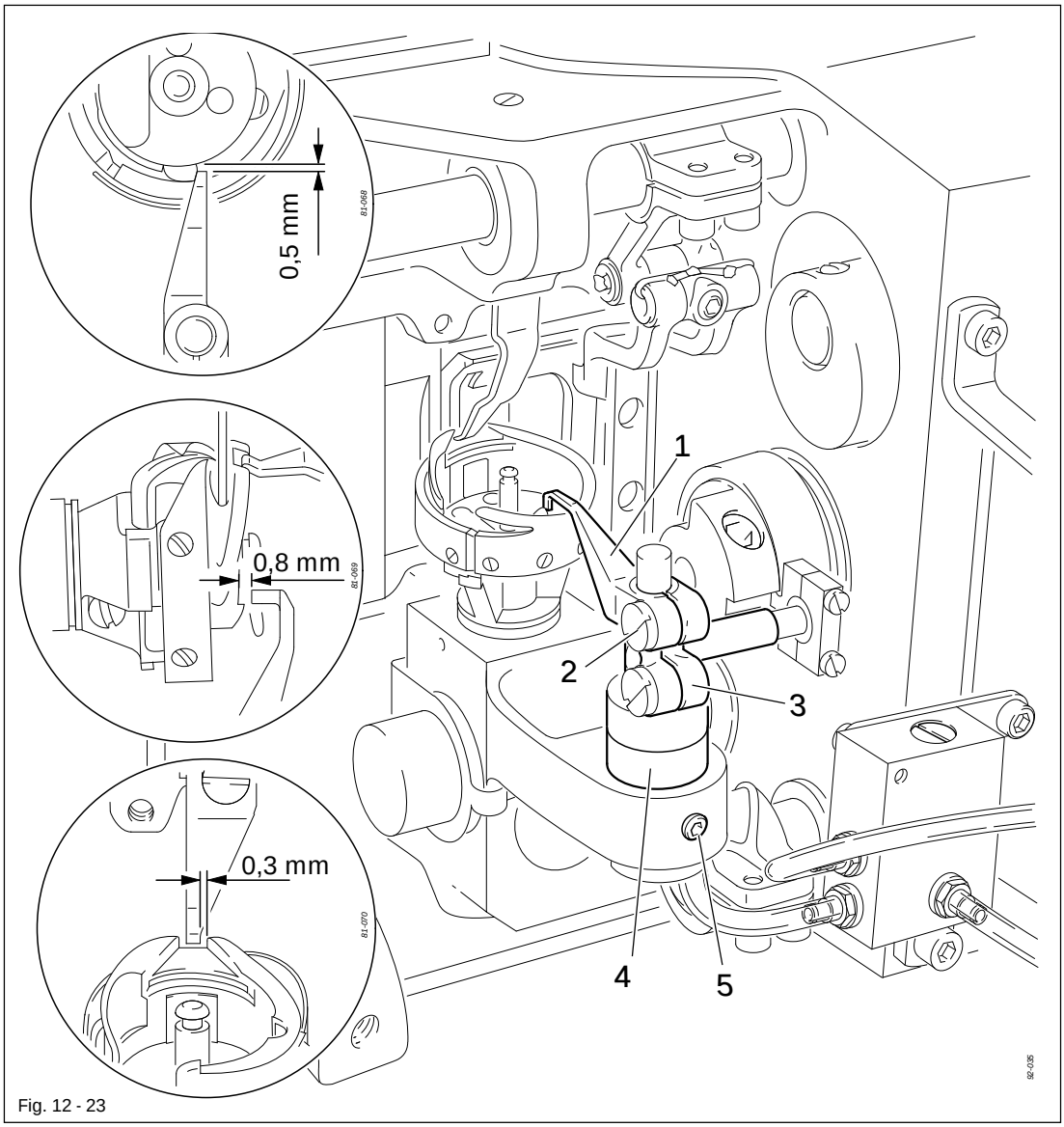

Fig. 12 - 23

- Loosen screw 2.
- Place bobbin opener 1 on the right side of the bobbin case base, press it against clamp crank 3 located underneath this and slightly tighten screw 2.
- Adjust eccentric bearing bush 4 (screw 5) in accordance with requirements 1 and 2.
- Adjust bobbin opener 1 in accordance with requirement 3 and tighten screw 2, taking care to see that bobbin opener 1 is touching clamp crank 3

12.05.23 Bobbin case opener motion

Requirement
With the needle bar 2.0 past bdc (hole 1) the bobbin case opener 3 must be at its right point of reversal.

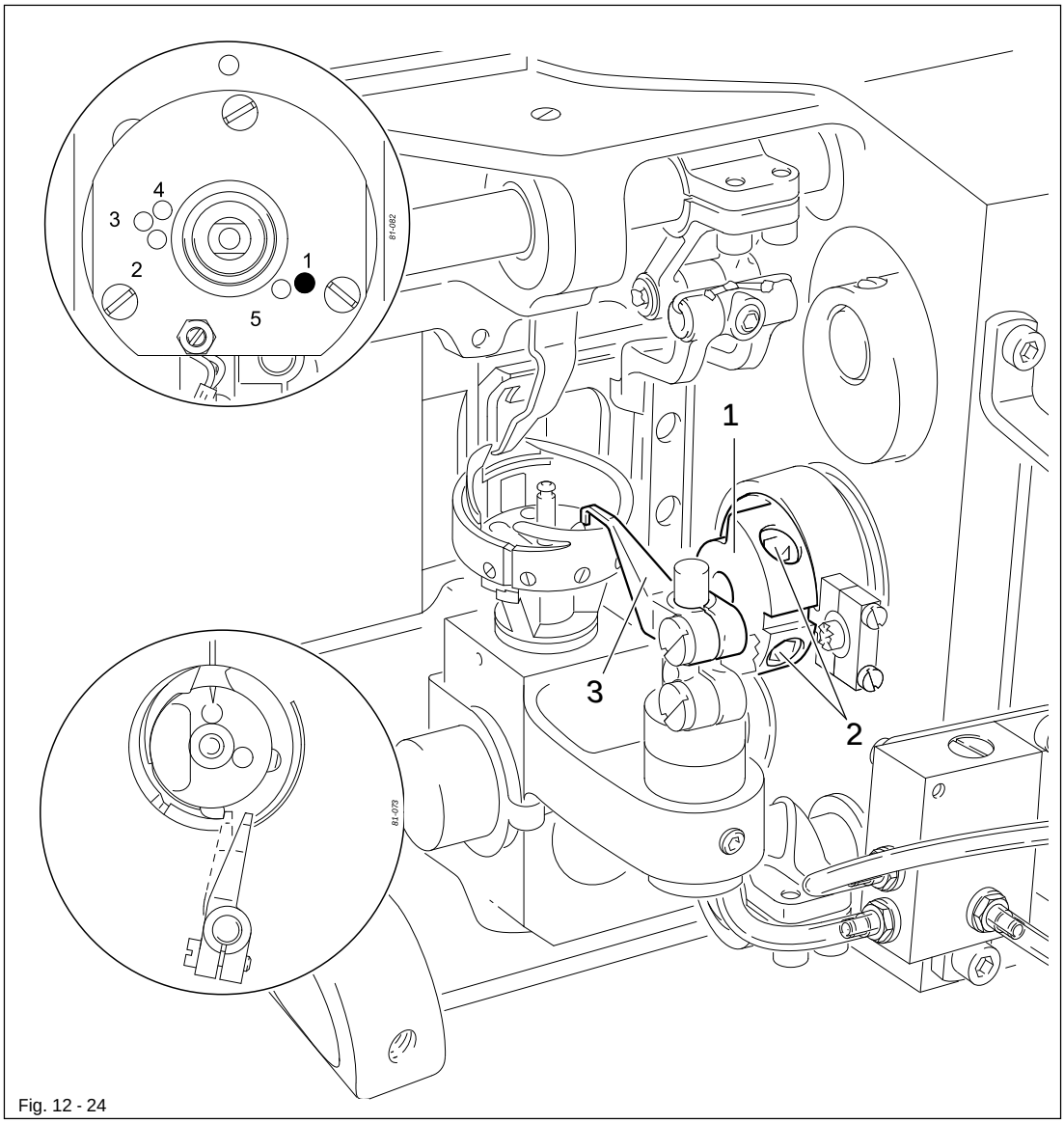

Fig. 12 - 24

- Adjust bobbin opener eccentric 1 (screws 2) in accordance with the requirement.

12.05.24 Bottom feed dog height

Requirement
With the stitch length set at "0" and the needle bar position at 0.25 past tdc (hole 3) the bottom feed dog must be in the middle of the needle plate cutout and be touching the feed dog height-adjustment gauge along its entire length.

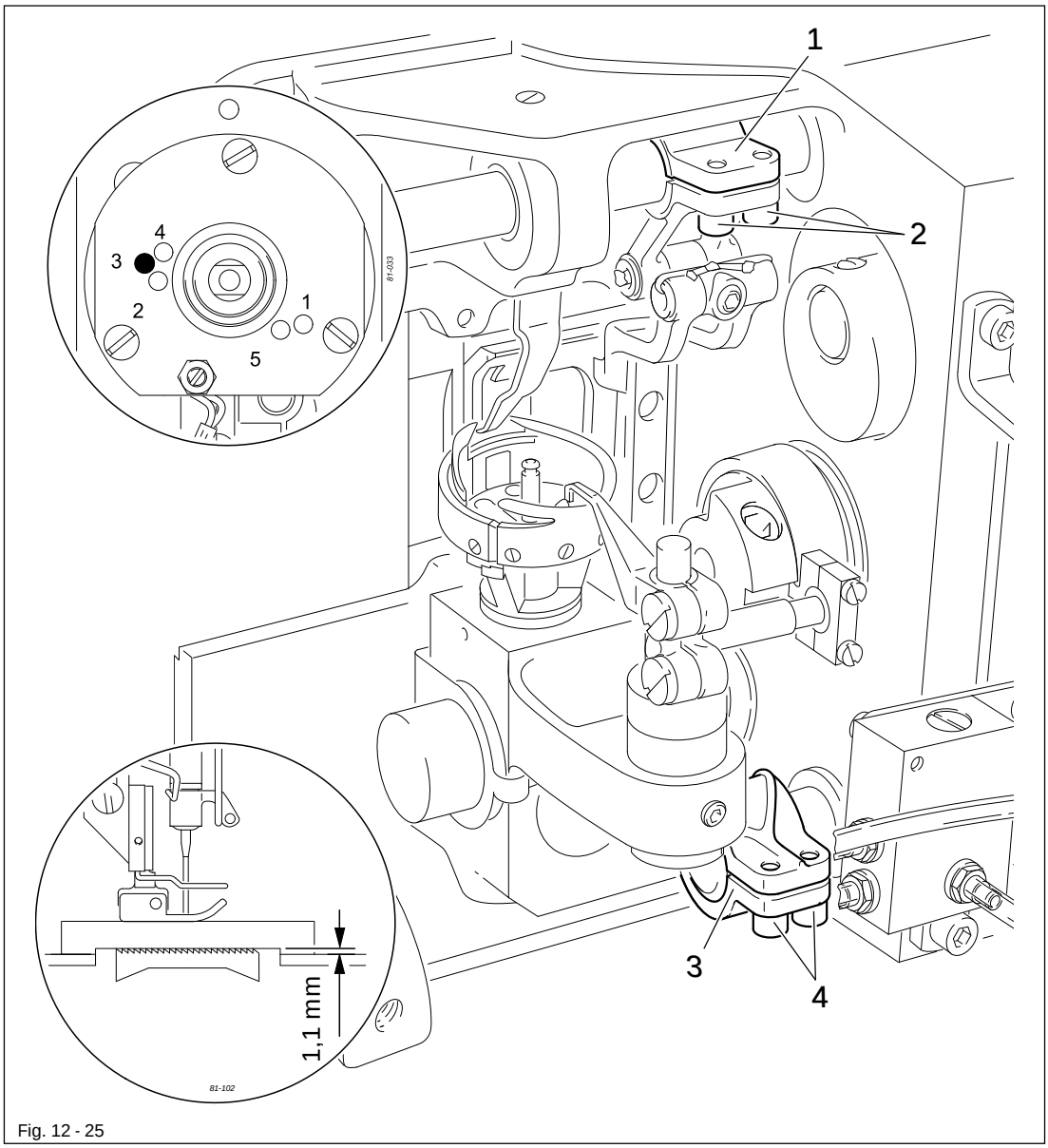

Fig. 12 - 25

- Position the feed dog adjustment gauge underneath the presser foot with the cutout facing downwards.
- Lower the presser foot onto it.
- Press the feed dog carrier up and position the feed dog in the middle of the needle plate cutout.
- Adjust lifting crank 1 (screws 2) and clamp bushing 3 (screws 4) in accordance with the requirement.

12.05.25 Presser foot to needle plate clearance

Requirement
When the hand lever is raised, the needle should penetrate exactly in the "needle hole centre" of the presser foot and the presser foot to needle plate clearance should be 5 mm.

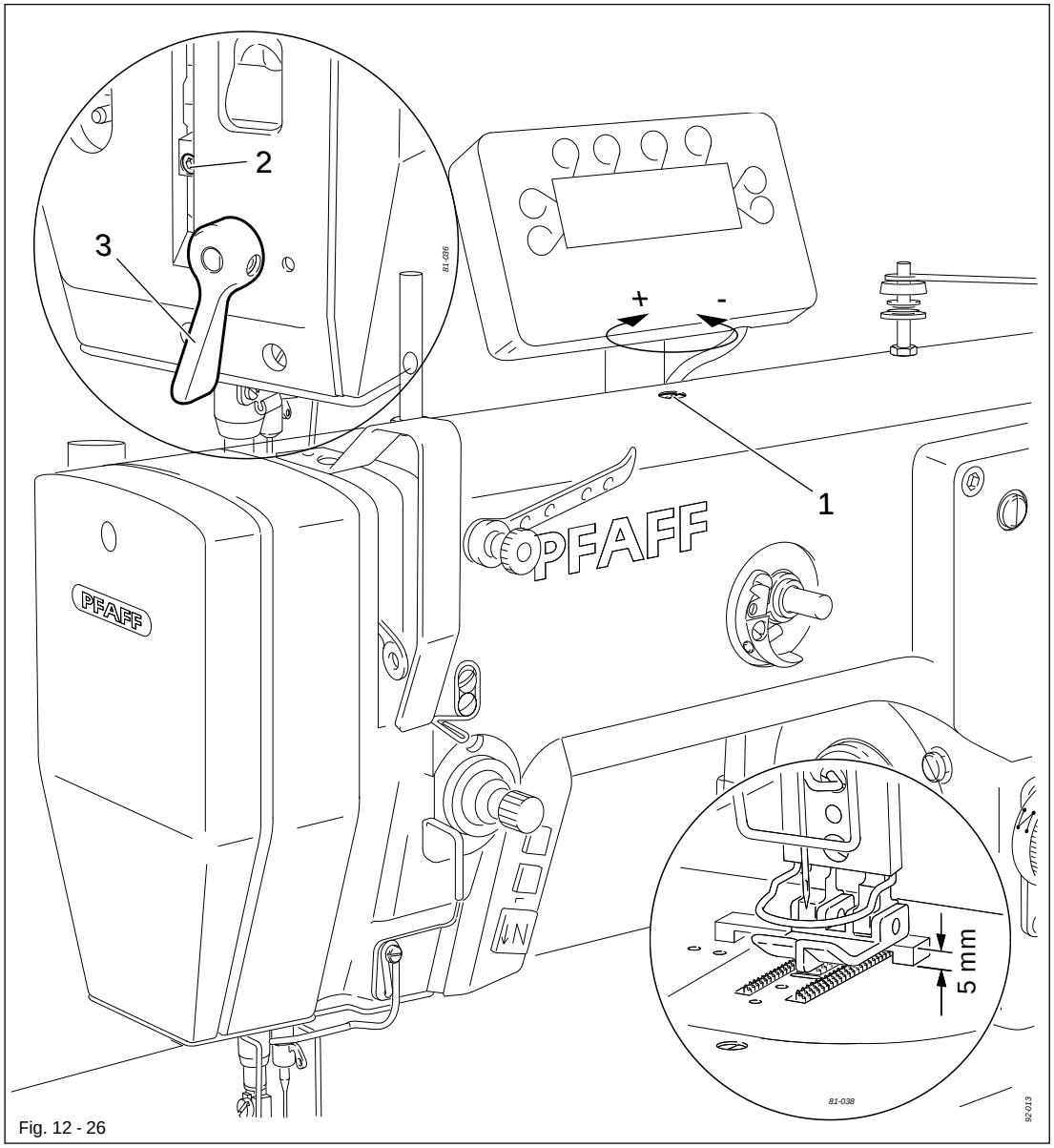

Fig. 12 - 26

- Set the zigzag stitch adjustment lever at "0" and the stitch position adjustment lever at "centre".
- Let the presser foot drop onto the needle plate and reduce the pressure on the presser bar by turning screws 1.
- Place the feed dog adjustment gauge under the presser foot with the recess at the bottom.
- Loosen screw 2 and raise hand lever 3.
- Allow the needle to penetrate the needle hole and align the presser foot in accordance with the requirement.
- Press the presser bar lifting piece down and tighten screw 2.

12.05.26 Presser foot pressure

Requirement
Even at top sewing speed the material should be fed without problems. There should be no pressure marks on the material.

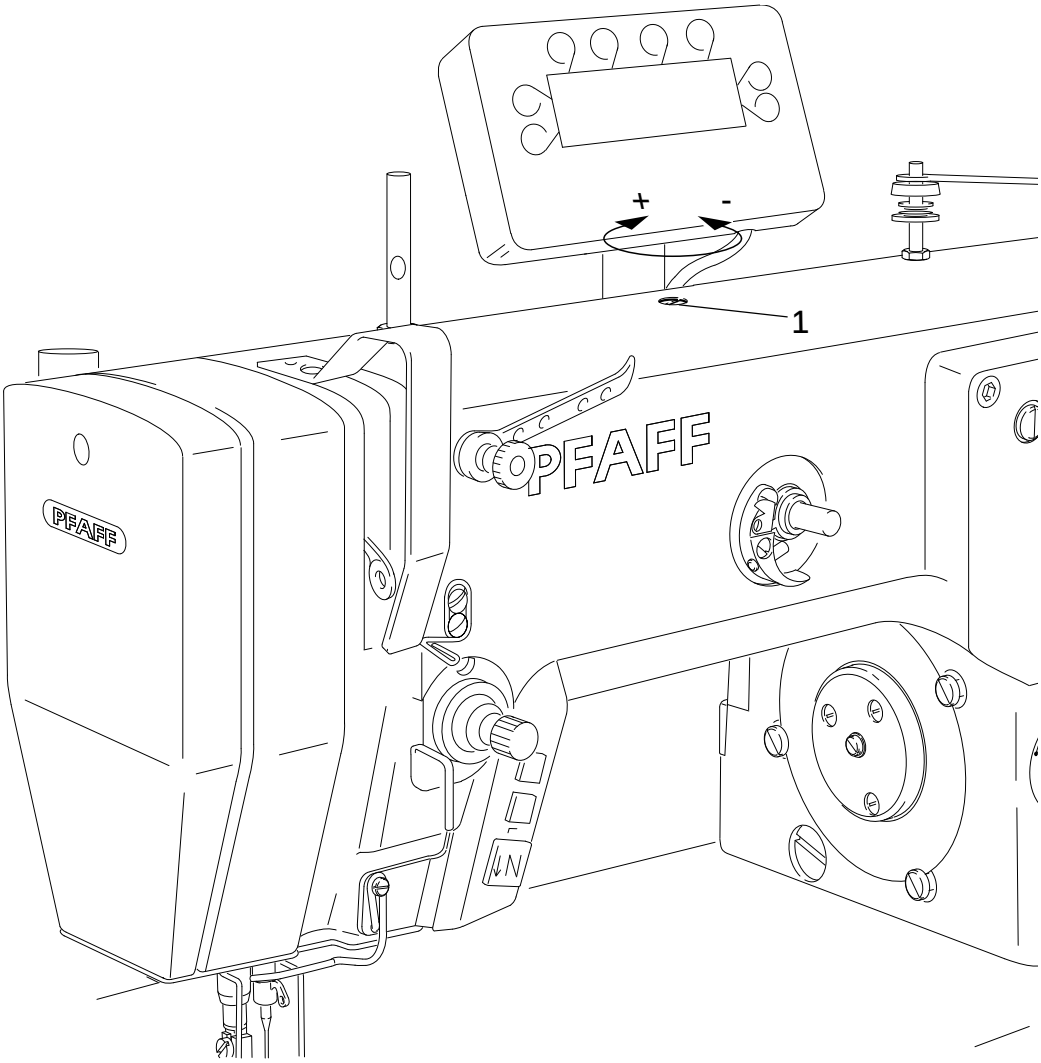

Fig. 12 - 27

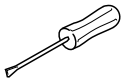

- Turn screw 1 in accordance with the requirement.



The presser foot pressure (screw 1) can be increased (+) or reduced (-) as required.

12.05.27 Thread diverter pin

Requirement
With the needle bar at bdc the top edge of the thread guide hole must be at the same height as the bottom edge of the thread diverter.

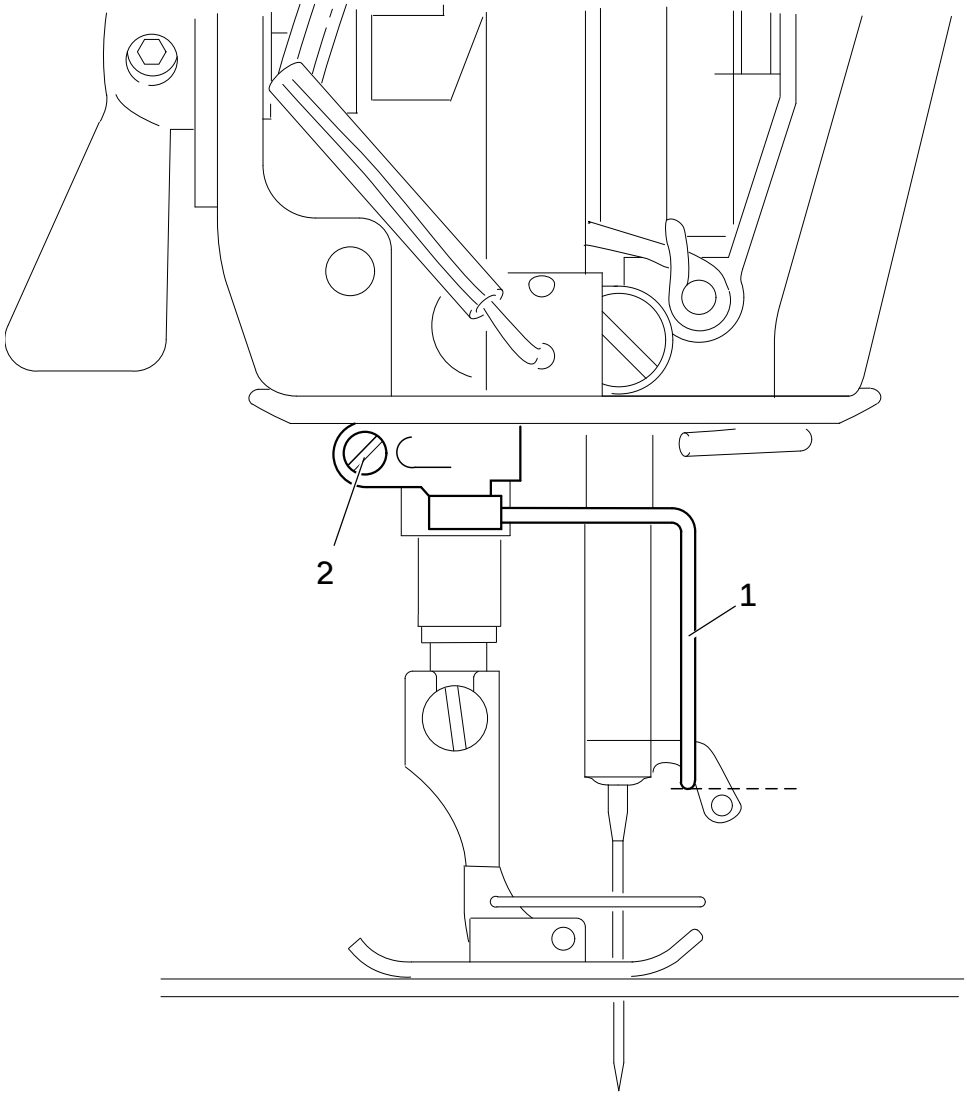

Fig. 12 - 28

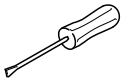

- Adjust thread guide bar 1 (screw 2) according to the requirement, taking care that it is parallel to the bed-plate.

12.05.28 Limiting the knee lever stroke

Requirement
When the knee lever is pressed the hand lever must drop automatically and the presser foot must be just over 7 mm above the needle plate.

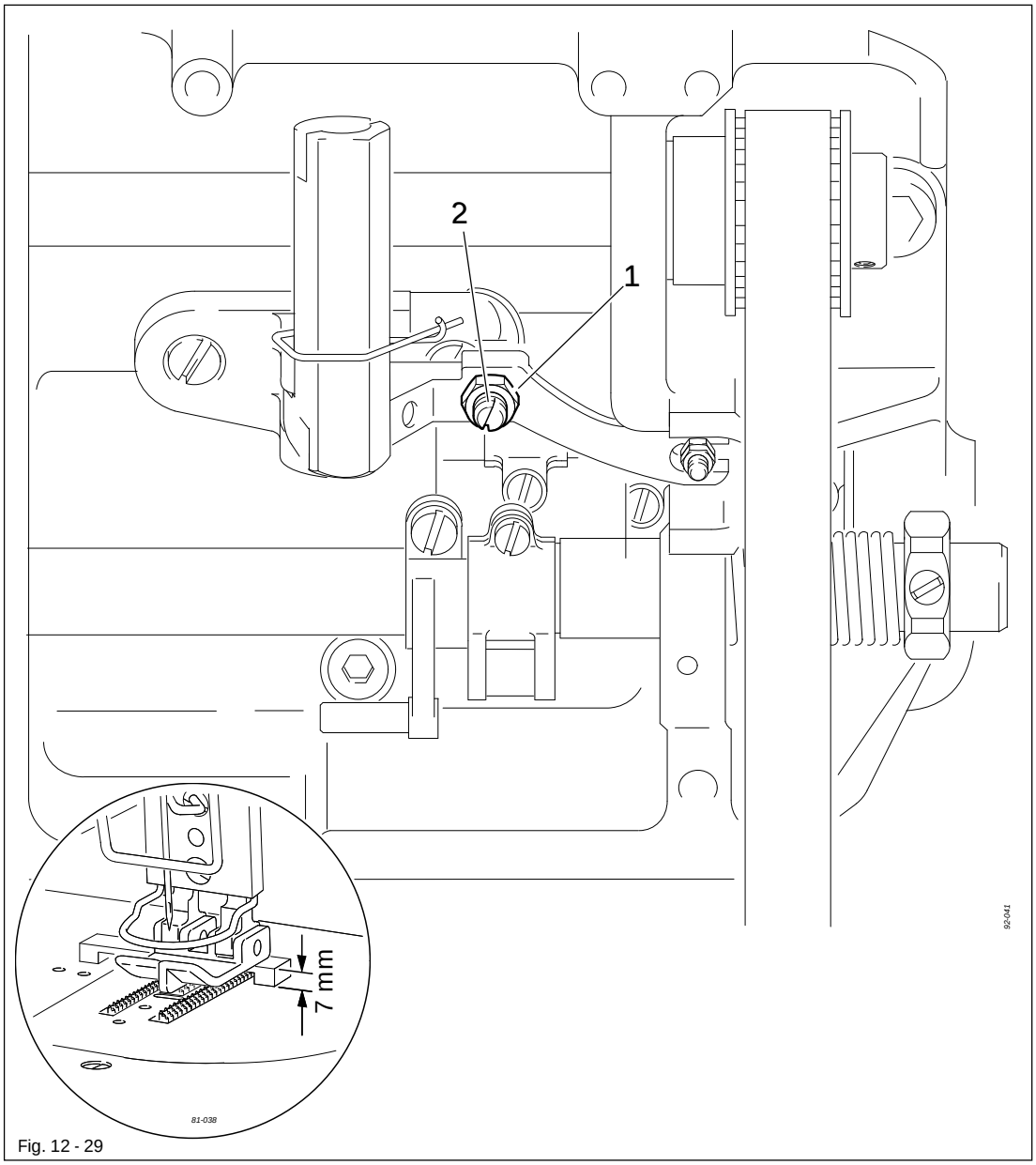

Fig. 12 - 29

- Place the feed dog gauge under the presser foot with its recess facing downwards.
- Lower the presser foot onto the gauge.
- Loosen nut 1 and turn screw 2 out a few turns.
- Move the knee lever to the right until a noticeable resistance is felt, making sure that the presser foot is not lifted off the gauge, and hold it at this position.
- Turn screw 2 in as far as it will go, then back out by one turn, and lock it in place with nut 1.

12.05.29 Knee lever play

Requirement
When lightly pressing the knee lever there should be a noticeable play between nut 1 and fork 3.

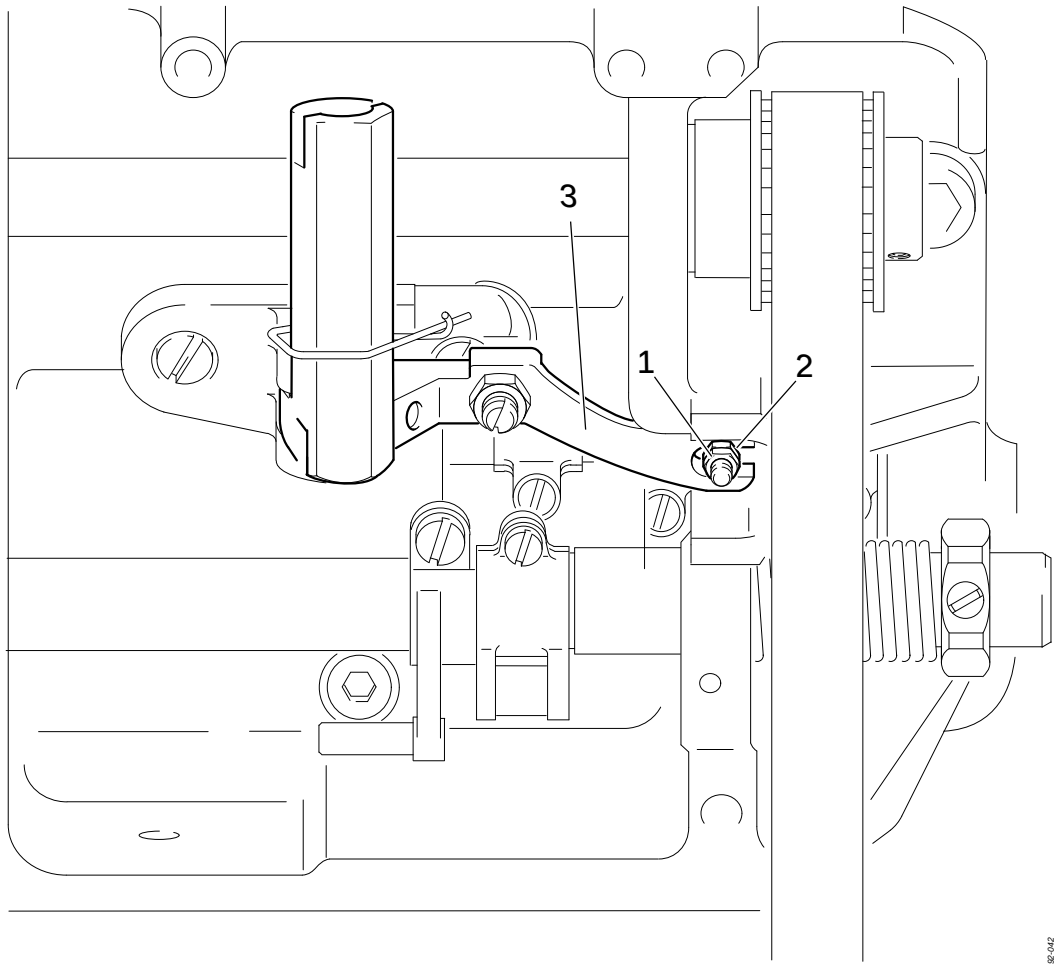

Fig. 12 - 30

- Adjust nut 1 (nut 2) in accordance with the requirement and lock it with nut 2.

12.05.30 Bobbin winder

Requirement

1. With the bobbin winder engaged the bobbin winder spindle must be turned reliably, but friction wheel 3 must not touch drive wheel 1 when the bobbin winder is switched off.
2. The bobbin winder must disengage automatically when the thread is approx. 1 mm from the edge of the bobbin.

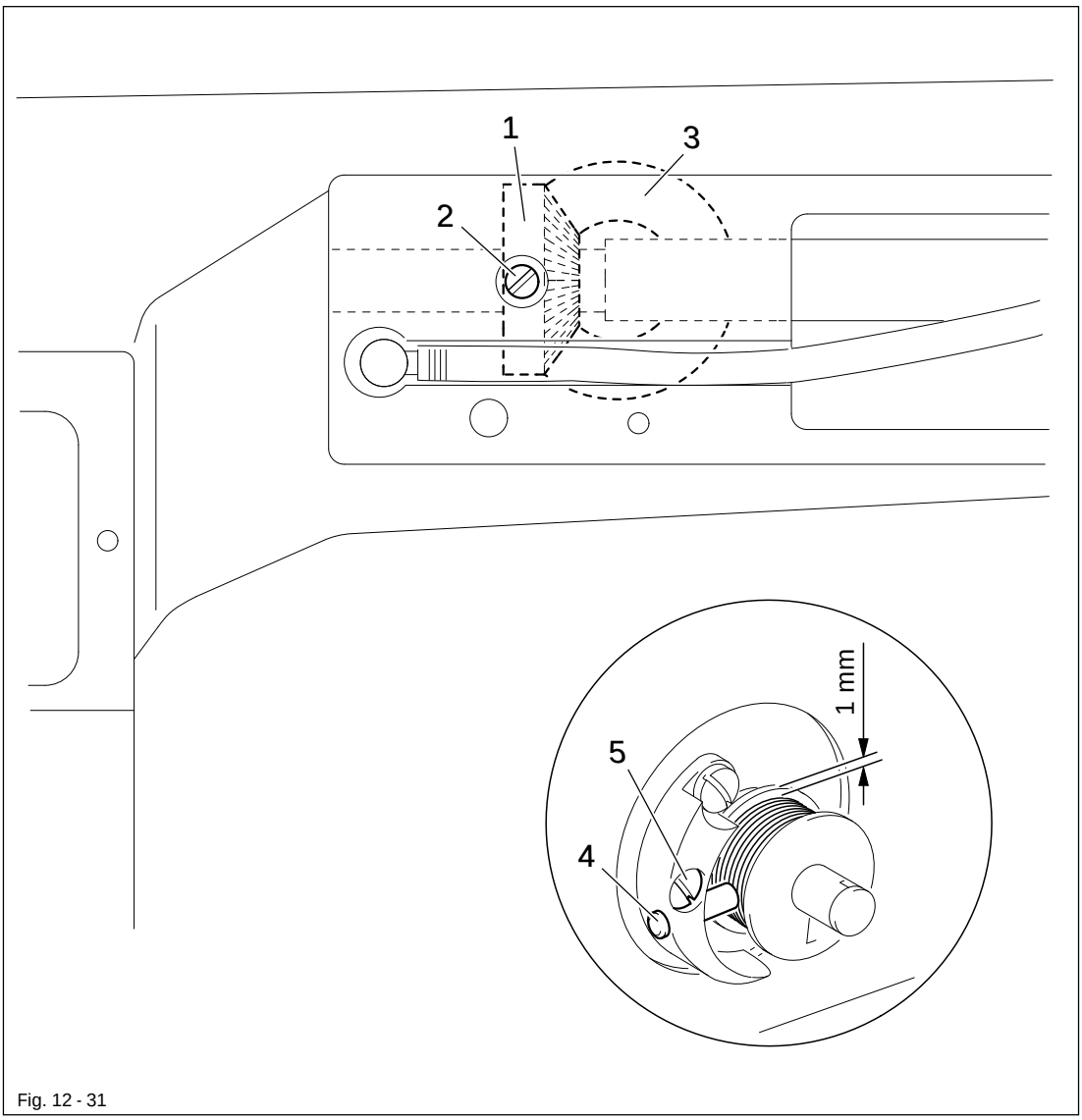

Fig. 12 - 31

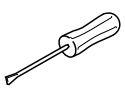

- Position drive wheel 1 in accordance with requirement 1 and tighten screw 2.
- Place a bobbin onto the bobbin winder, thread the bobbin and engage the bobbin winder
- Move regulating pin 3 in accordance with requirement 2 and tighten screw 4.

12.06 Adjusting the thread trimmer

12.06.01 Axial position of the control cam

Requirement
1. Roller 5 should be at a distance of 0.3 mm from the control cam 1.
2. Adjustment ring 3 should be touching the control cam 1.

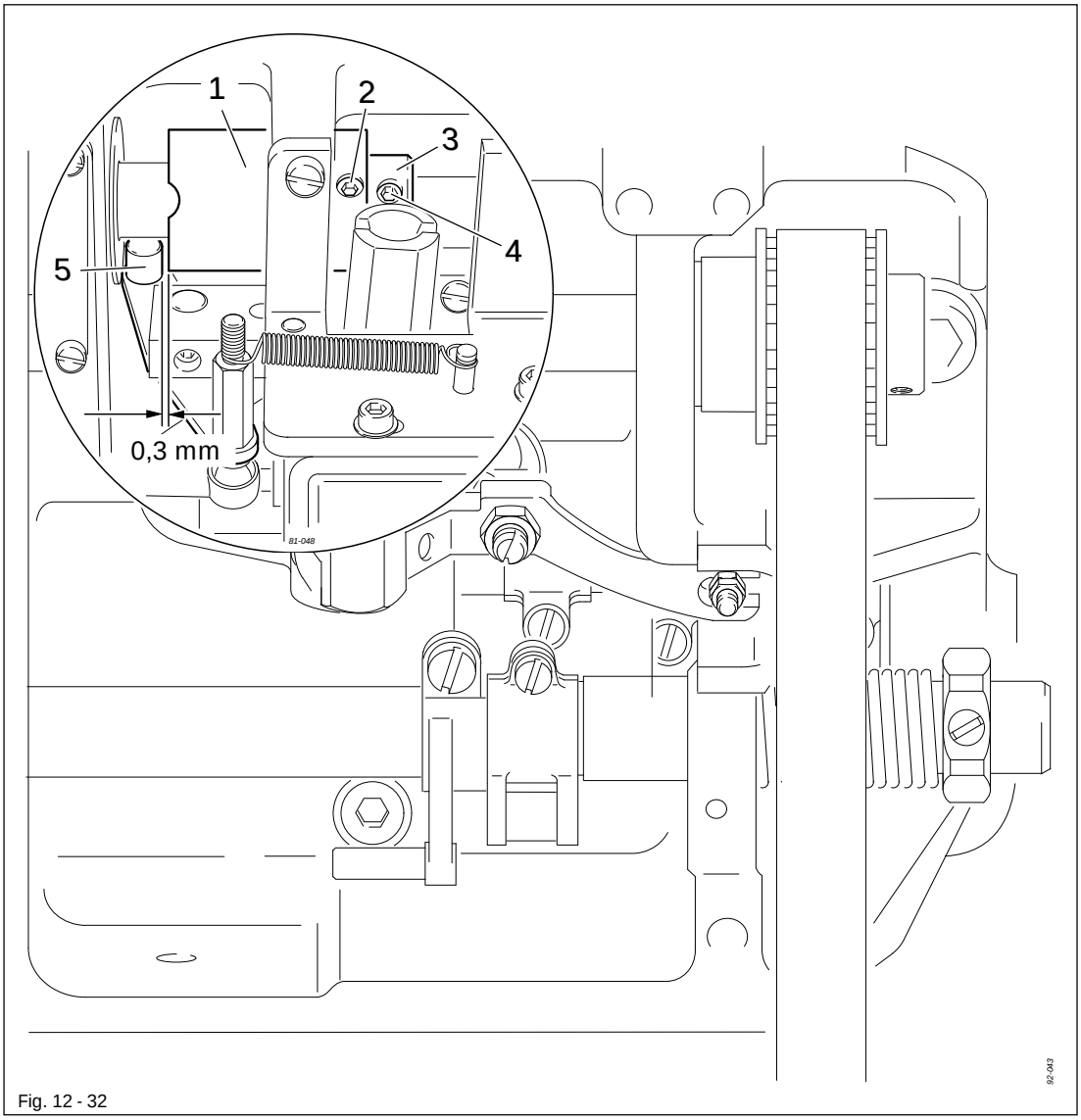

Fig. 12 - 32

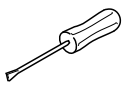

- Shift control cam 1 (screw 2) and adjustment ring 3 (screw 4) in accordance with the requirements.

12.06.02 Preliminary adjustment of the control cam

Requirement

1. In the needle rise position (hole 1) the roller lever 4 should lock into the corresponding groove of the control cam.
2. The control cam 1 should be touching adjustment ring 3.

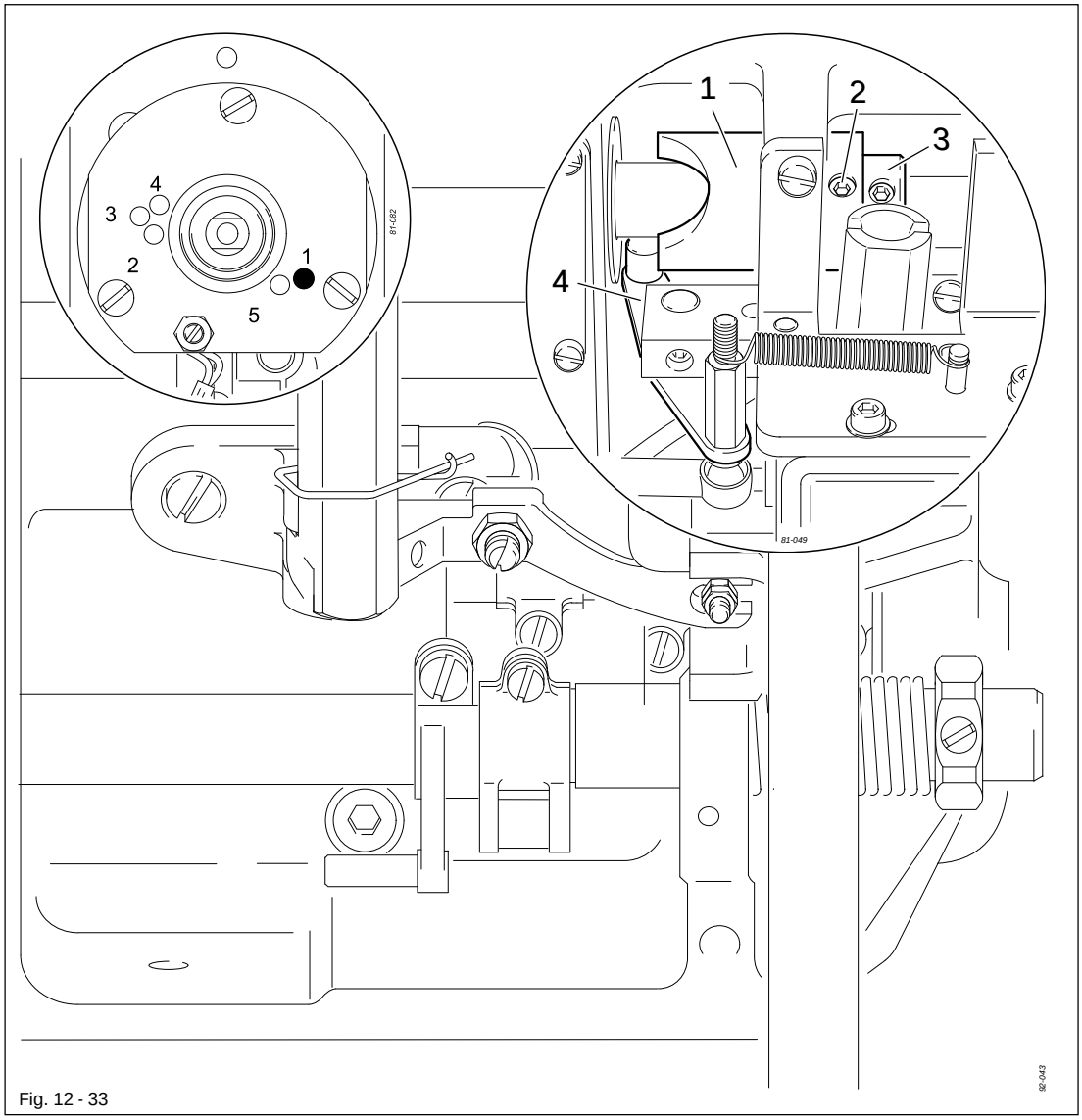

Fig. 12 - 33

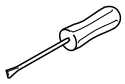

- Turn control cam 1 (screws 2) in accordance with requirement 1 and shift it in accordance with requirement 2.

12.06.03 Position of the thread catcher and cutting test

Requirement
When the thread trimmer is in its neutral position, the edge of thread catcher 6 should be flush with the edge of the mounting plate 4.

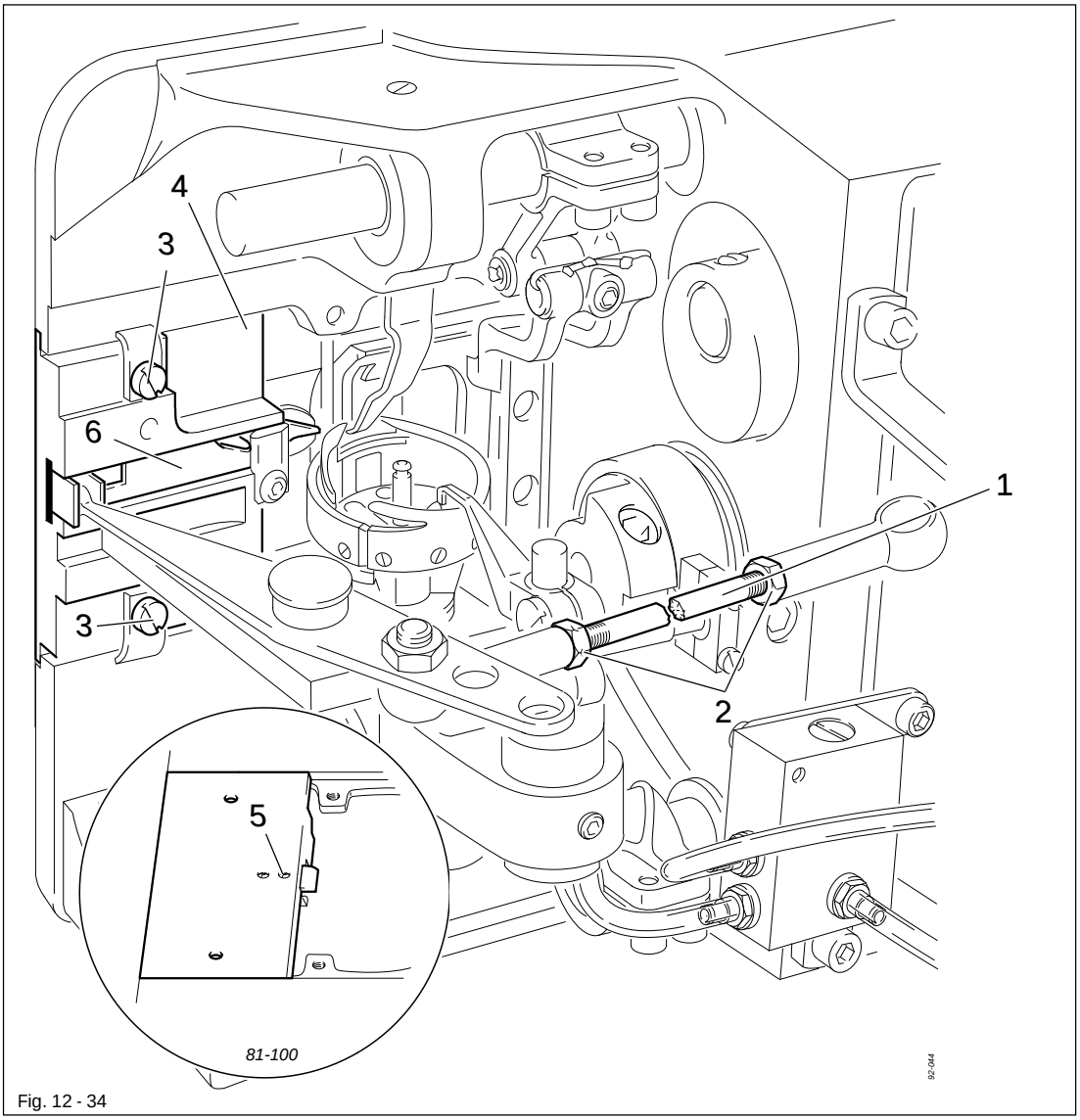

Fig. 12 - 34

- Turn linkage rod 1 (nuts 2, left and right thread) in accordance with the requirement.
- During the cutting test, remove linkage rod 1, loosen screws 3 and remove mounting plate 4.
- Carry out the cutting test with double thread.
- By turning screw 5 adjust the cutting pressure.
- Fit mounting plate 4 so that its edge is flush with the edge of the bed-plate.
- Tighten screws 3 and replace linkage rod 1.

12.06.04 Readjustment of the control cam

Requirement

1. When the end of the hook guard 3 is level with of the right edge of the bobbin case position finger 4, the thread catcher 5 should begin moving forwards.
2. The control cam 1 should be touching adjustment ring 6.

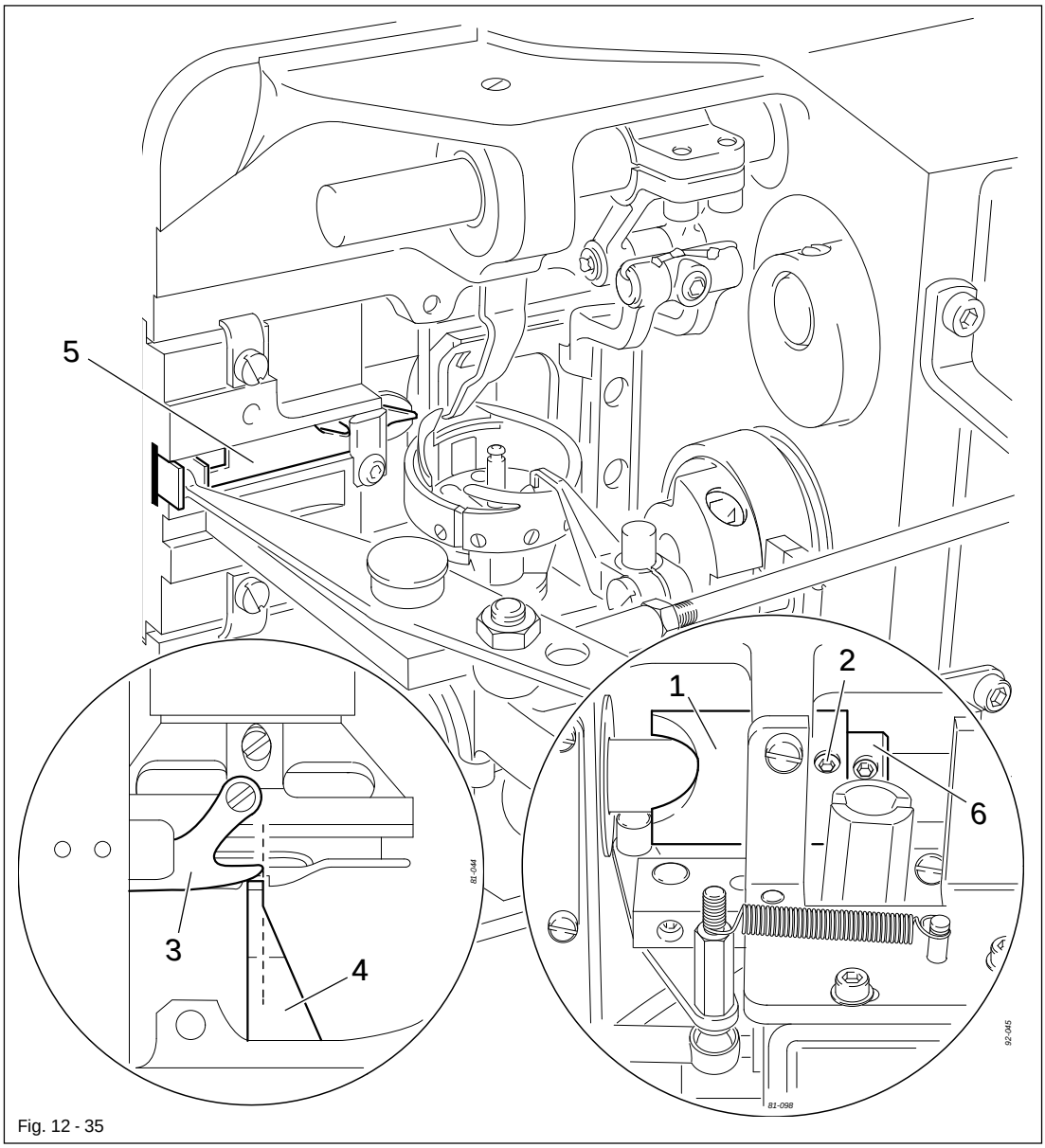

Fig. 12 - 35

- Bring the needle bar to b.d.c.
- Turn control cam 1 (screws 2) in accordance with requirement 1 and shift it in accordance with requirement 2.

12.06.05 Needle thread tension release

Requirement

1. When solenoids 3 are activated, the tensions disks 4 should be at least 0.5 mm apart.
2. When the thread trimmer is in its neutral position and the sewing foot is positioned on the needle plate, the tension should be fully effective.

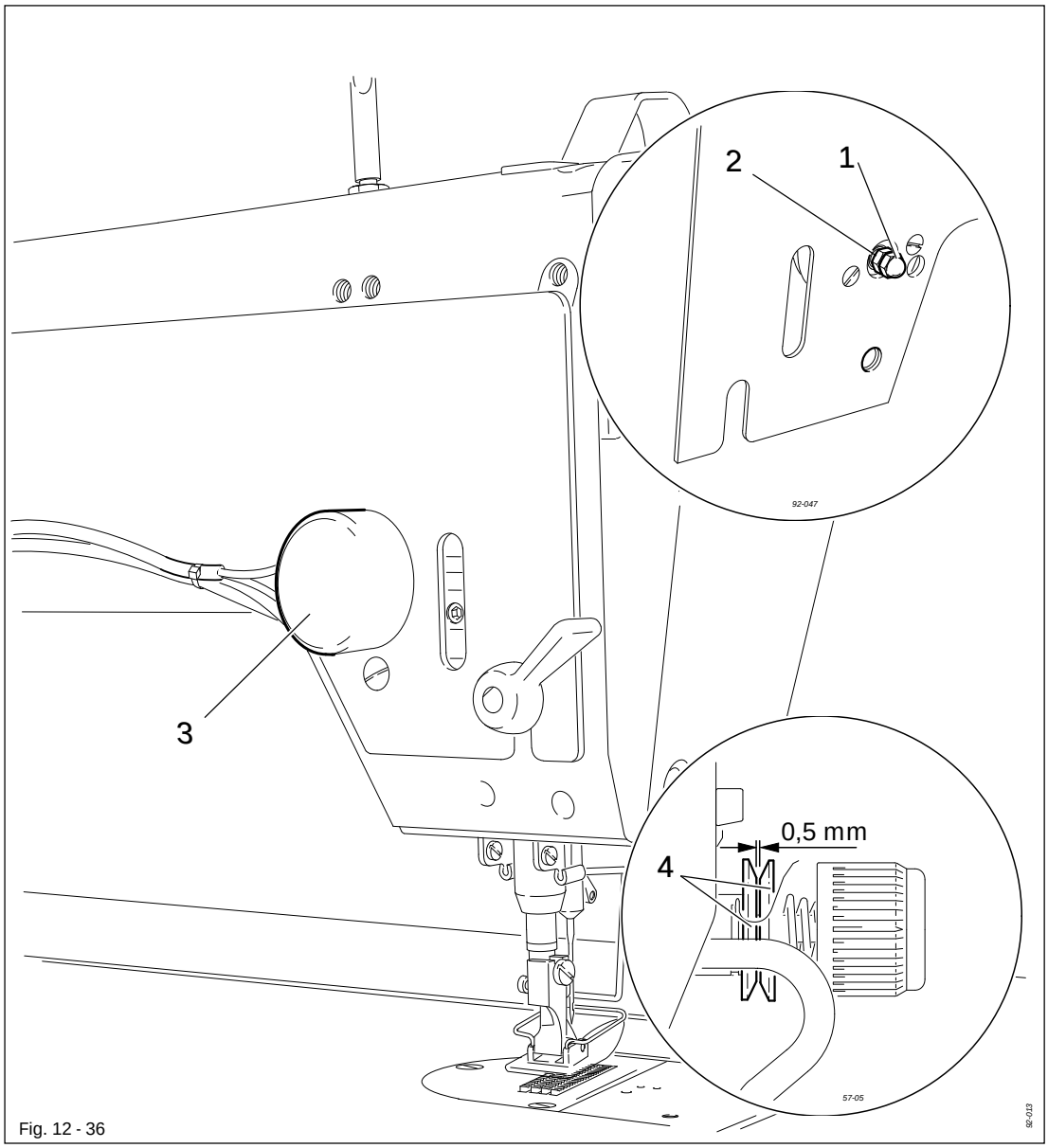

Fig. 12 - 36

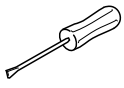

- Unscrew the thread wiper.
- Turn nut 1 (nut 2) in accordance with the requirements.
- Screw thread wiper back into place.

12.07 Parameter settings

12.07.01 Selecting the user level

- Switch on the machine.

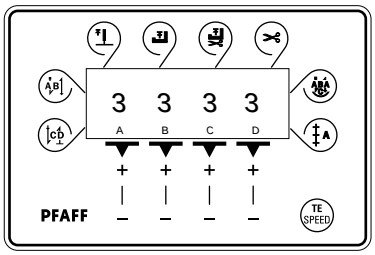

2 x TE SPEED

- Press the TE/Speed key twice to call up the input mode.

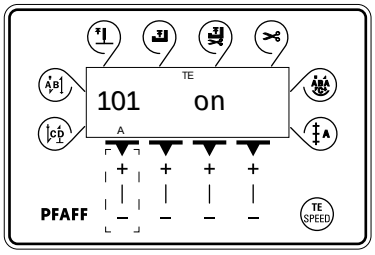

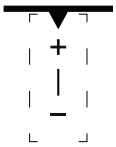

- By pressing the corresponding +/- key select the parameter group "798".

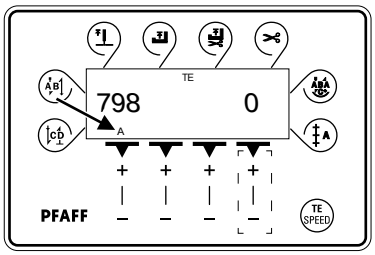

- By pressing the corresponding +/- key select the desired user level:

"0" = operator level A
"1" = technician level B
"11" = service level C

The selected user level is displayed on the screen. (see arrow)

12.07.02 Example of a parameter input

- Switch on the machine.

2 x TE SPEED

- Press the TE/Speed key twice to select the input mode.

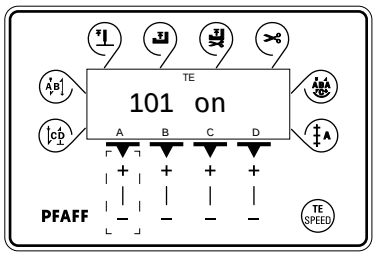

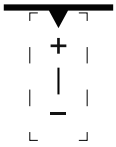

- By pressing the corresponding plus/minus key select parameter "798" and the user level "B", see Chapter 12.09.01 Selecting the user level.

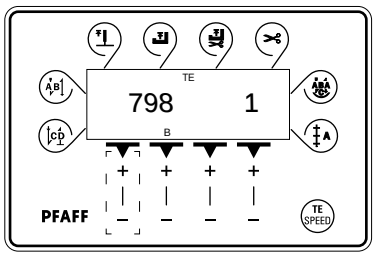

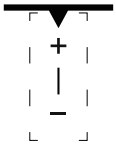

- Select parameter "607" by pressing the corresponding +/- key.

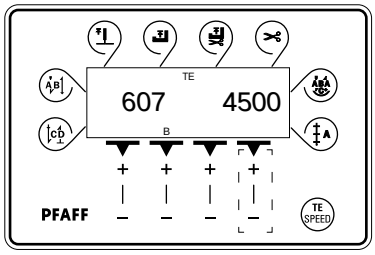

- Select the required value for the maximum speed by pressing the corresponding +/- key.

TE SPEED

- By pressing the TE/Speed key the selected value is taken over and the machine switches to the sewing mode.

12.07.03 List of parameters

Group	Parameter	Description	User level	Setting range	Set value
1	101	Control panel key tone (0FF = AUS, ON = EIN)	A, B, C		ON
6	605	Speed display (0FF = AUS, ON = EIN)	B, C		OFF
	607	Max. speed	B, C	300 - 6000	4500
	609	Cutting speed	B, C	60 - 500	180
	660	Bobbin thread control 0 = off 1 = thread monitor 2 = reverse counter	A, B, C	0 - 2	0
7	700	Needle position 0 (needle reference position)	B, C	0 - 255	
	702	Needle position 1 (needle lowered)	B, C	0 - 255	70
	703	Needle position 2 (take-up lever raised)	B, C	0 - 255	222
	705	Needle position 5 (end of cutting signal 1)	B, C	0 - 255	196
	706	Needle position 6 (start of cutting signal 2)	B, C	0 - 255	136
	707	Needle position 9 (start thread tension release)	B, C	0 - 255	150
	746	Switchover position from multi-stitch to zig-zag stitch	B, C	0 - 255	90
	748	Key allocation for switchover position	B, C	1 - 7	7
	797	Hardware test (0FF = AUS, ON = EIN)	B, C		OFF
	798	User level 0 = User level „A“ 1 = Mechanic level „B“ 11 = Service level „C“	A, B, C	0, 1, 11	0
	799	Machine class 1 = 918U / 938U 2 = -	C	1 - 2	1
8	800	Rotating direction of the motor 1 = 918U / 938U	C	0 - 1	1

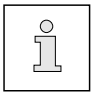

Further parameters are listed in the Motor Instruction Manual.

12.08 Reset / Cold start

After selecting the reset menu, by pressing the corresponding key it is possible to delete seam parameters, delete seam programs and to carry out a cold start.

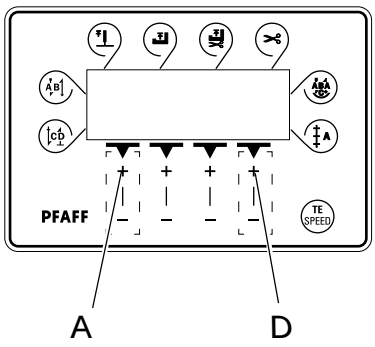

- Press and hold "+" on keys A and D and switch on the machine, see Chapter 7.01 Main switch.

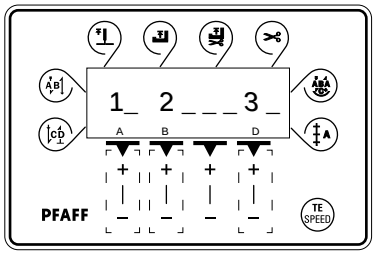

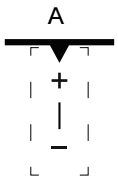

Resetting the seam parameters

- Press "+"on key "A".
  All parameters are deleted, the display "—rE—" appears for a short time on the screen.

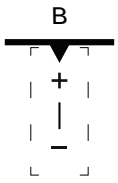

Resetting the seam programs

- Press "+"on key "B".
  All seam programs are deleted, the display "—rE—nA" appears for a short time on the screen.

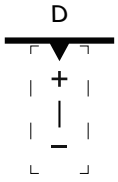

Cold start

- Press "+" on key "D".
  With the exception of the value for the machine class, the values of the machine control unit are set back to their basic values, the display "—COLd—" appears for a short time on the screen.



After the cold start all programmed values are set back to their status at the time of delivery. For this reason after a cold start it is necessary to re-enter first the parameter "800" and then the parameters "700" to "799".

12.09 Explanation of the error signals

Signal	Description
E001	Pedal not in neutral position
E009	Start inhibitor during standstill
E010	Incorrect machine class
E062	Short circuit 24V
E063	Overload mains supply circuit
E064	Network monitoring
E065	Extint low in operation
E066	Short circuit
E067	Network off
E068	Extint low in operation
E069	No increments
E070	Motor blocking
E071	No incremental connector
E074	External transmitter for synchronisation marker missing
E088	RAM defective
E092	Start inhibitor when motor running
E173	Start error
E175	Start error

12.10 Internet update of the machine software

The machine software can be updated with PFAFF flash programming. For this purpose the PFP boot program and the appropriate control software for the machine type must be installed on a PC. To transfer the data to the machine, the PC and the machine control unit must be connected with an appropriate null modem cable (part no. 91-291 998-91).



The PFP boot program and the control software of the machine type can be downloaded from the PFAFF-homepage using the following path:
www.pfaff-industrial.com/de/service/download/steuerungssoftware.html

To update the machine software carry out the following steps:



While the machine software is being updated, no setting up, maintenance or adjustment work may be carried out on the machine!

- Switch off the machine.
- Connect the PC (serial interface or appropriate USB-adapter) and the machine control unit (RS232).
- Switch on the PC and start the PFP boot program.
- Select the machine type.
- Press the "programming" button.
- An extra program (quick loader) is started.
- Switch on the machine within 60 seconds.
- The software update is carried out, the update progress is shown on the bar display.
- NWhen the update has been completed, the message "software update successfully completed" appears.



If this message does not appear, the entire procedure must be repeated! The machine is not safe for operation until the programming has been completed successfully and without faults.

- Switch off the machine and end the quick loader and PFP boot program.
- End the connection between the PC and the machine control unit.
- Switch on the machine.
  A plausibility control is carried out and, if necessary, a cold start.

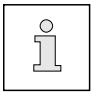

More information and assistance is at your disposal in the file "PFPHILFE.TXT", which can be called up from the PFP boot program by pressing the "help" button.

13 Wearing parts

This is a list of the most important wearing parts.
You can order a detailed spare parts list for the complete machine under part no. 296-12-18 759.

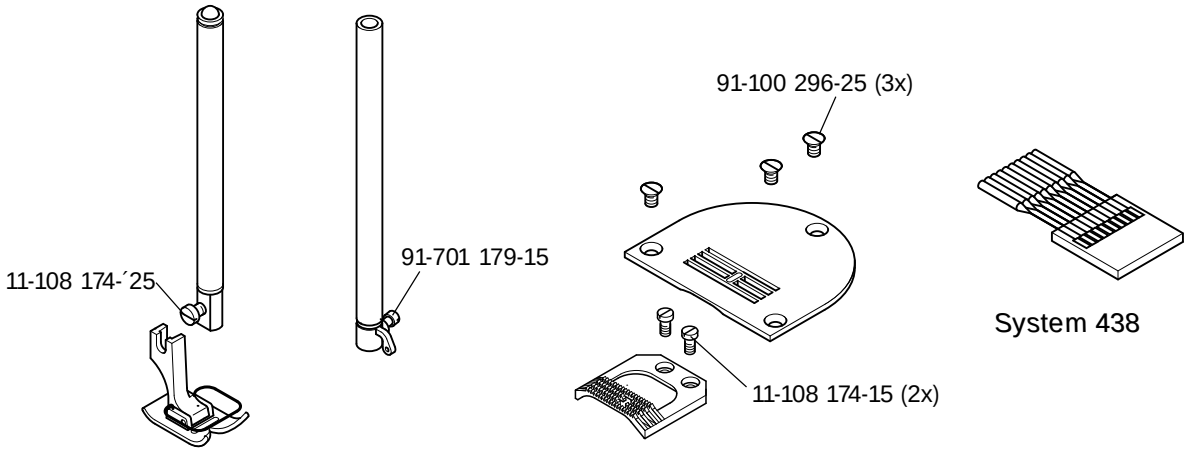

PFAFF 918 U

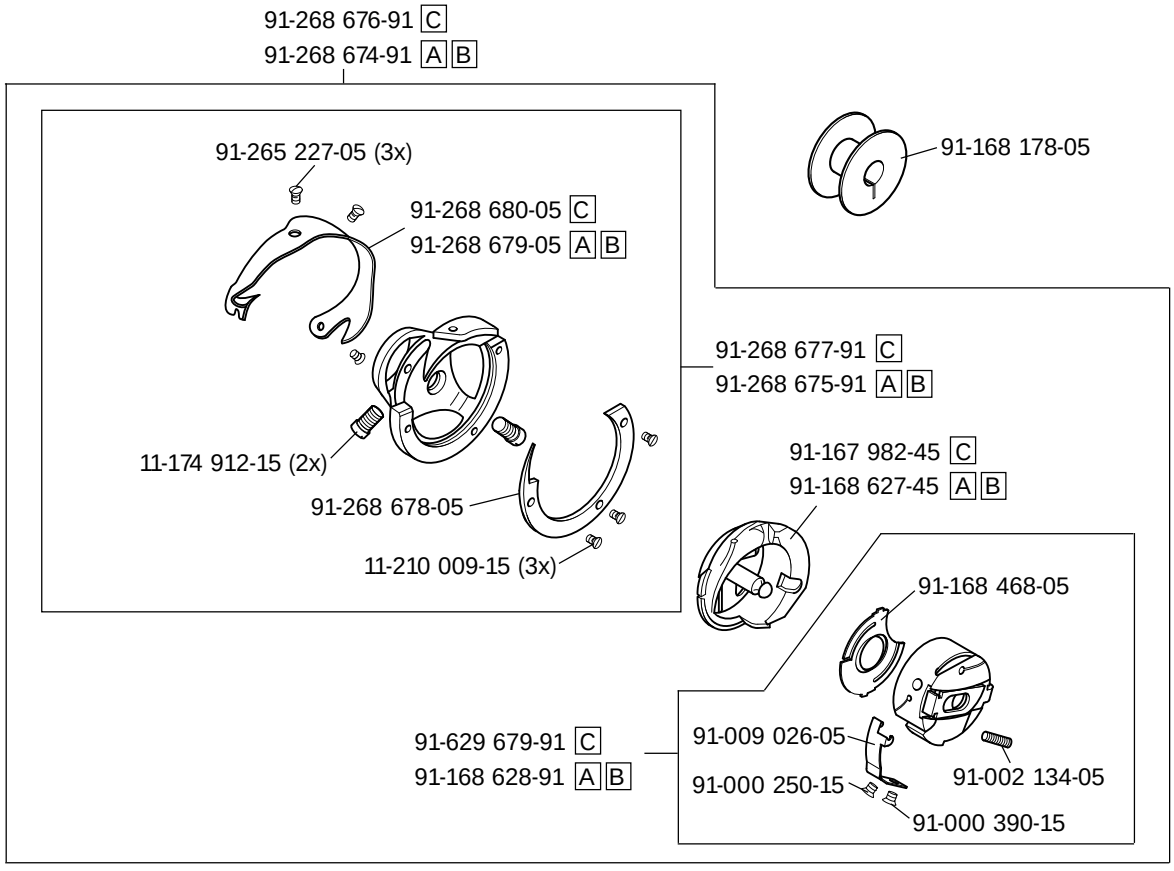

PFAFF 938 U

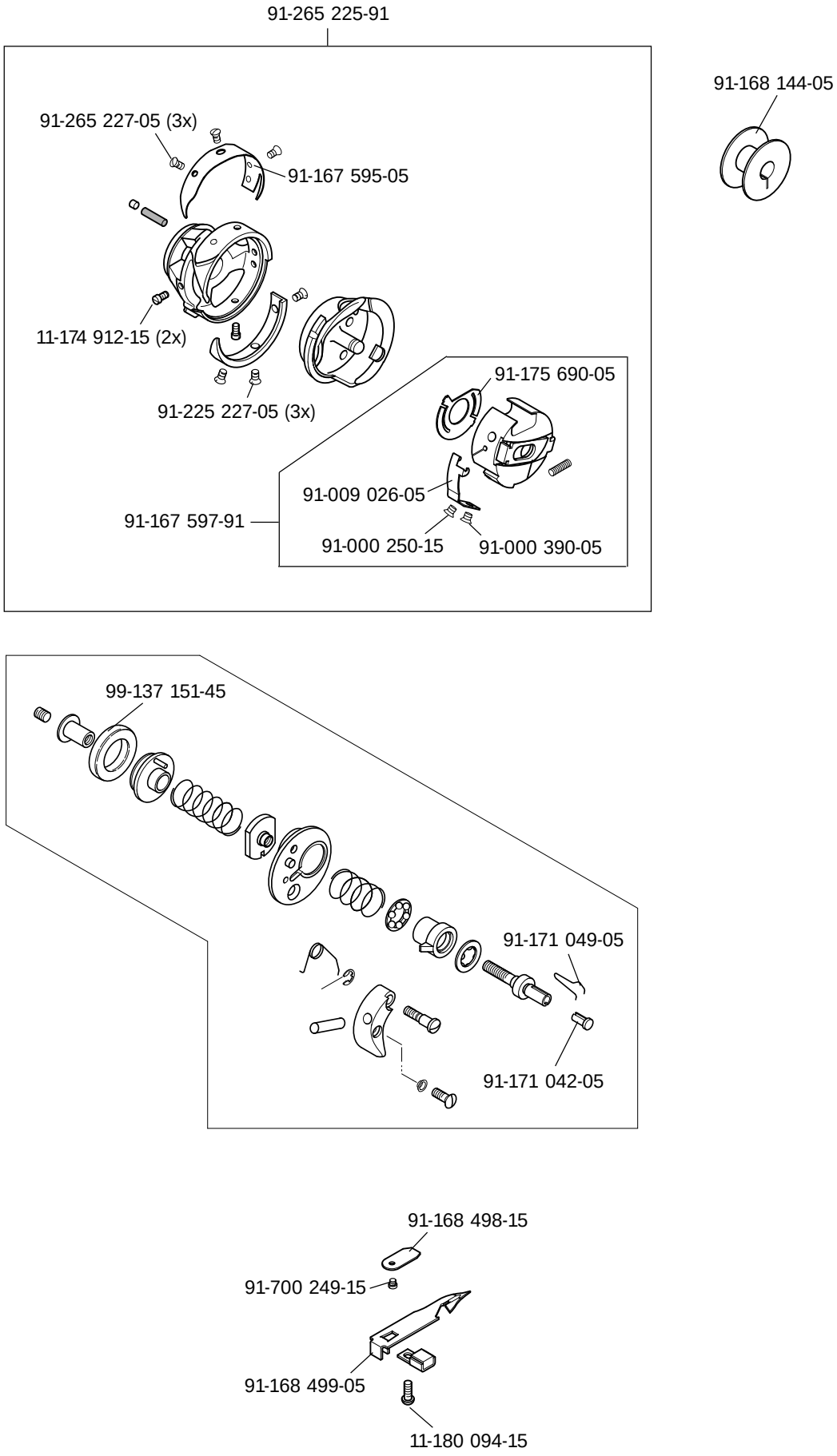
91-265 225-91
91-168 144-05
91-265 227-05 (3x)
91-167 595-05
11-174 912-15 (2x)
91-225 227-05 (3x)
91-175 690-05
91-009 026-05
91-167 597-91
91-000 250-15
91-000 390-05
99-137 151-45
91-171 049-05
91-171 042-05
91-168 498-15
91-700 249-15
91-168 499-05
11-180 094-15

14 Circuit diagrams

Reference list for circuit diagrams 91-191 477-95

A1	Controller Quick P40 ED
A2	Control panel S1
A14	Sewing head identification
B1	Initiator zig-zag stitch control
H1	Sewing lamp
H10	LED Stitch counter
M1	Sewing motor
Q1	Main switch
S1	Pedal set value transmitter
S6	Start inhibitor key
S41	Manual backtacking
S42	Needle position change key
S43	Single stitch key
X0	RS232 interface (PC)
X1	Motor
X2	Incremental transmitter
X3	Set value transmitter
X4	Control panel S1
X5	Inputs/outputs
X6	Bobbin thread (optional)
X7	Light barrier (optional)
X22	900/.. thread trimmer
X24	910/..automatic presser foot lift
X25	911/.. backtacking device
X28	Thread tension release
X40	Keyboard
X46	Start inhibitor
X50	Sewing head identification
Y2	-900/..thread trimmer
Y4	-910/..automatic presser foot lift
Y5	-911/..backtacking device
Y8	Thread tension release

Reference list for circuit diagrams 91-191 478-95

A1	Controller Quick P50 ED
A2	Control panel S2
A14	Sewing head identification
B1	Initiator zig-zag stitch control
H1	Sewing lamp
H10	LED Stitch counter
M1	Sewing motor
M2	SRP linear motor
Q1	Main switch
S1	Pedal set value transmitter
S2	SRP knee switch
S6	Start inhibitor key
S41	Manual backtacking
S42	Needle position change key
S43	Single stitch key
X0	RS232 interface (PC)
X1	Motor
X2	Incremental transmitter
X3	Set value transmitter
X4	Control panel S2
X5	Inputs/outputs
X6	Bobbin thread (optional)
X7	Light barrier (optional)
X8	M2 SRP
X12	SRP knee switch
X22	900/.. thread trimmer
X24	910/..automatic presser foot lift
X25	911/.. backtacking device
X28	Thread tension release
X40	Keyboard
X46	Start inhibitor
X50	Sewing head identification
Y2	-900/..thread trimmer
Y4	-910/..automatic presser foot lift
Y5	-911/..backtacking device
Y8	Thread tension release

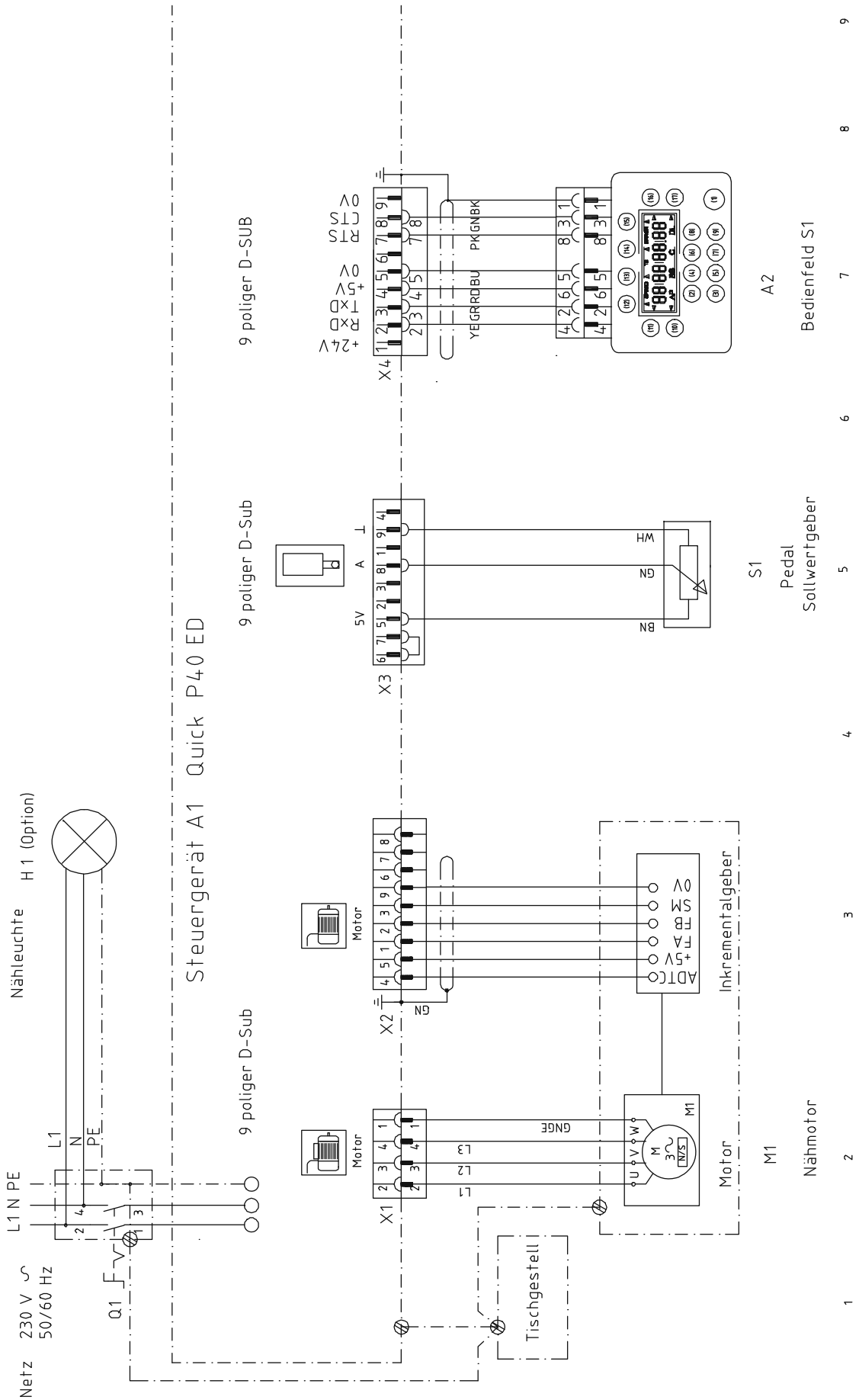
Steuergerät A1 Quick P40 ED
9 poliger D-SUB
9 poliger D-Sub
9 poliger D-Sub
Nähleuchte
H 1 (Option)
Netz 230 V ~ 50/60 Hz
L1 N PE
Q1
X1
X2
X3
X4
Motor
Motor
Motor
Inkrementalgeber
ADTC
+5V
FA
FB
SM
0V
M1
Nähmotor
S1
Pedal
Sollwertgeber
A2
Bedienfeld S1
Tischgestell
+24V
RxD
TxD
+5V
0V
RTS
CTS
0V
YE GR RD BU
PK GN BK
WH
GN
BN
GNGE
L1
L2
L3
1
2
3
4
5
6
7
8
9

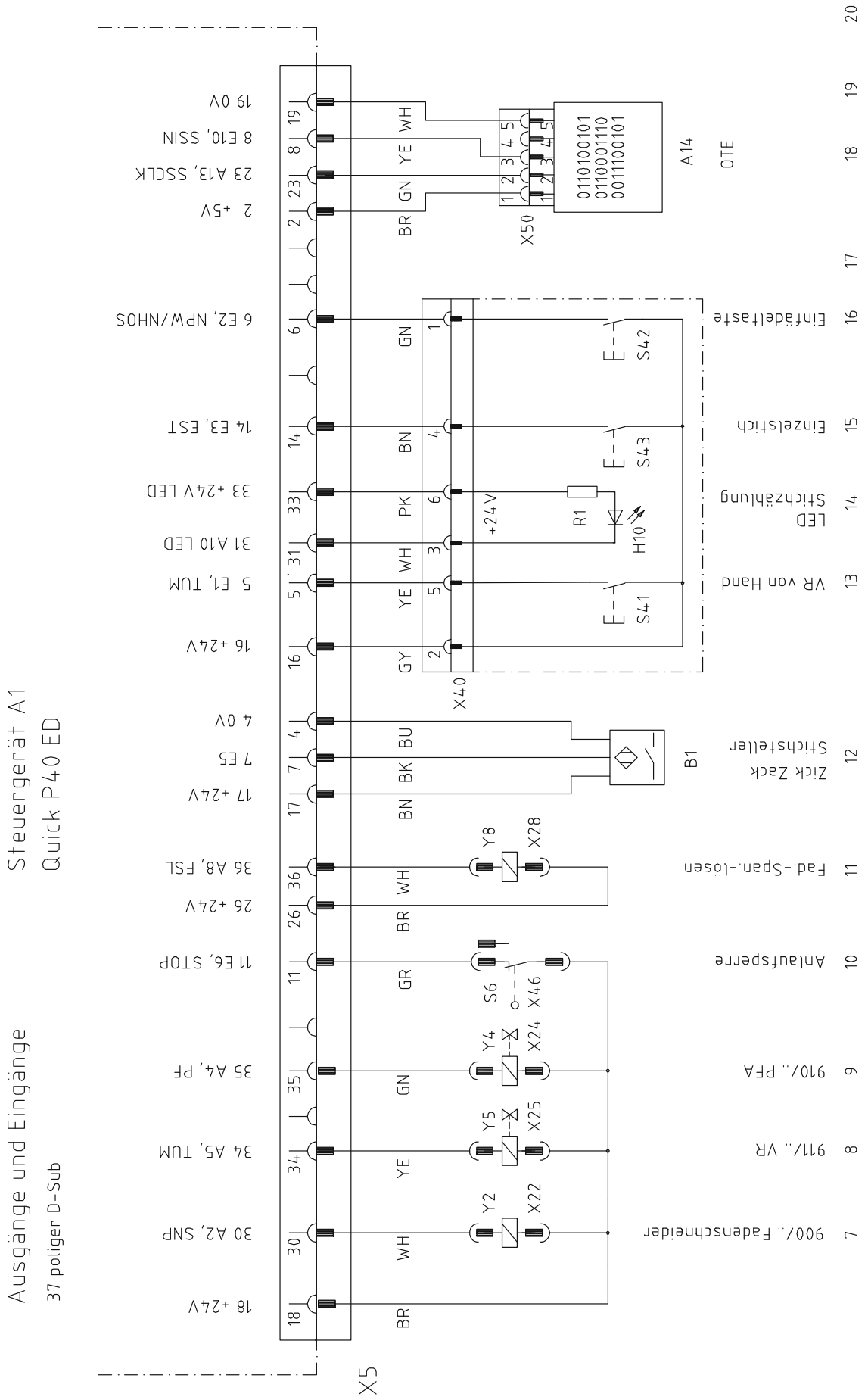
Steuergerät A1
Quick P40 ED
Ausgänge und Eingänge
37 poliger D-Sub
X5
19 0V
8 E10, SSIN
23 A13, SSCLK
2 +5V
6 E2, NPW/NHOS
14 E3, EST
33 +24V LED
31 A10 LED
5 E1, TUM
16 +24V
4 0V
7 E5
17 +24V
36 A8, FSL
26 +24V
11 E6, STOP
35 A4, PF
34 A5, TUM
30 A2, SNP
18 +24V
BR
WH
YE
GN
BK
BU
GY
PK
BN
GR
X40
X50
A14
OTE
0110100101
0110001110
0011100101
Einfädeltaste
Einzelstich
LED Stichzählung
VR von Hand
Zick Zack Stichsteller
Fad.-Span.-lösen
Anlaufsperre
910/.. PFA
911/.. VR
900/.. Fadenschneider
S41
S42
S43
S6
R1
H10
B1
Y2
Y4
Y5
Y8
X22
X24
X25
X28
X46
+24V

Steuergerät A1 Quick P40 ED
6 poliger Western
X6
+5V
0V
UFW IN
LS
+24V
UFW OUT
6 poliger Western
X7
+5V
0V
UFW IN
LS
+24V
UFW OUT
9 poliger D-SUB
X0
RXD
TXD
0V
(Option)
Unterfadenwächter
(Option)
Lichtschranke
RS232-Schnittstelle
17
18
19
20
21
22
23
24
25

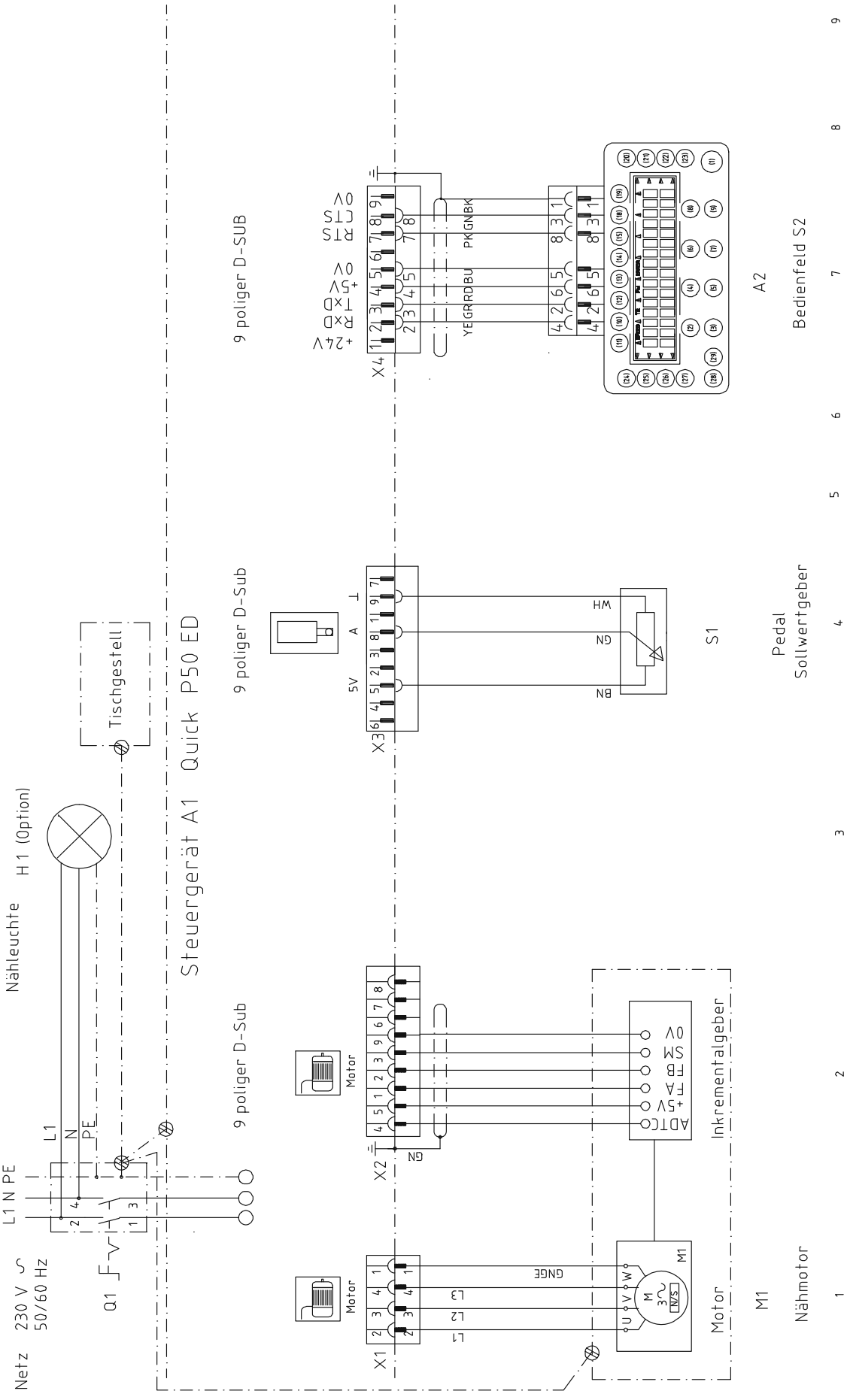
Netz 230 V ∿ 50/60 Hz
Q1
L1 N PE
L1
N
PE
Nähleuchte
H1 (Option)
Tischgestell
Steuergerät A1 Quick P50 ED
9 poliger D-Sub
9 poliger D-Sub
9 poliger D-Sub
X1
X2
X3
X4
Motor
Motor
Motor
L1
L2
L3
GNGE
GN
5V
A
⊥
WH
GN
BN
YE GR RD BU
PK GN BK
+24V
RxD
TxD
+5V
0V
RTS
CTS
0V
Inkrementalgeber
ADTC
+5V
FA
FB
SM
0V
M1
Nähmotor
S1
Pedal
Sollwertgeber
A2
Bedienfeld S2

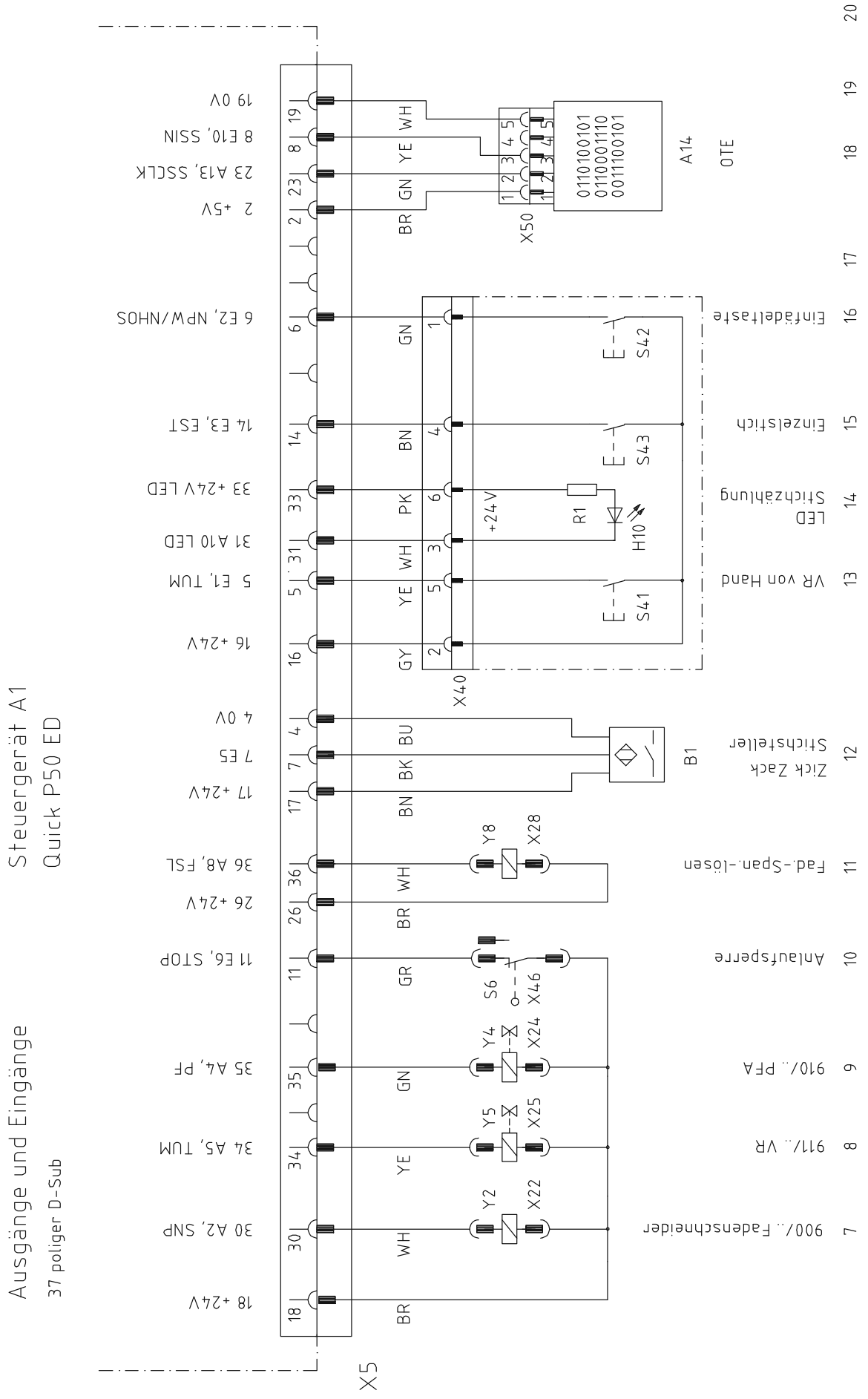
Steuergerät A1
Quick P50 ED
Ausgänge und Eingänge
37 poliger D-Sub
X5
19 0V
8 E10, SSIN
23 A13, SSCLK
2 +5V
6 E2, NPW/NHOS
14 E3, EST
33 +24V LED
31 A10 LED
5 E1, TUM
16 +24V
4 0V
7 E5
17 +24V
36 A8, FSL
26 +24V
11 E6, STOP
35 A4, PF
34 A5, TUM
30 A2, SNP
18 +24V
WH
YE
GN
BR
BU
BK
BN
GR
PK
GY
X50
X40
A14
OTE
0110100101
0110001110
0011100101
Einfädeltaste
Einzelstich
LED Stichzählung
VR von Hand
Zick Zack Stichsteller
Fad.-Span.-lösen
Anlaufsperre
910/.. PFA
911/.. VR
900/.. Fadenschneider
S42
S43
S41
S6
R1
H10
+24V
B1
Y8
X28
Y4
X24
X46
Y5
X25
Y2
X22
1 2 3 4 5
6 7 8 9 10 11 12 13 14 15 16 17 18 19 20

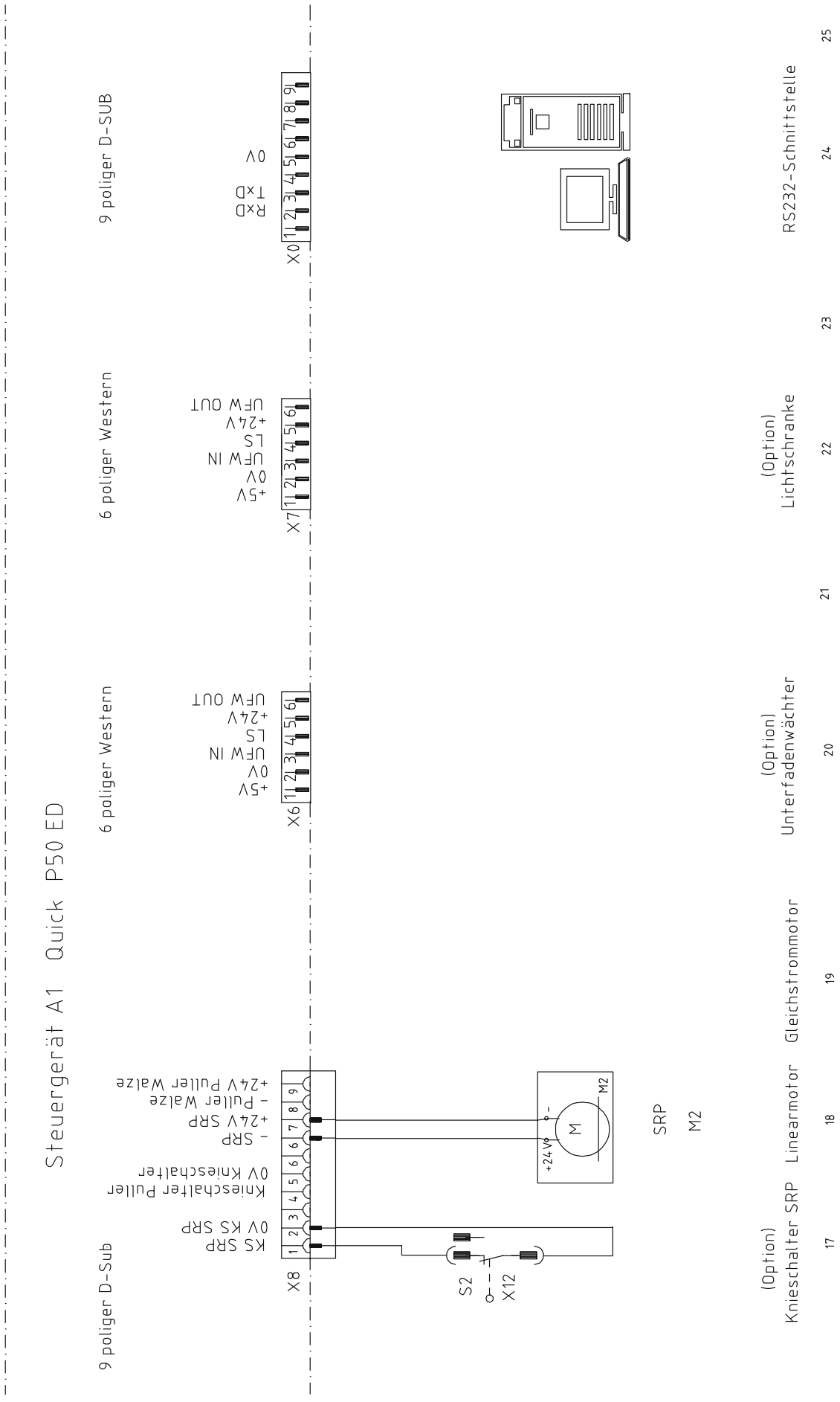
Steuergerät A1 Quick P50 ED
9 poliger D-Sub
KS SRP
0V KS SRP
Knieschalter Puller
0V Kniesschalter
- SRP
+24V SRP
- Puller Walze
+24V Puller Walze
X8
S2
X12
+24V
M
M2
SRP
M2
(Option)
Knieschalter SRP
Linearmotor
Gleichstrommotor
(Option)
Unterfadenwächter
6 poliger Western
+5V
0V
UFW IN
LS
+24V
UFW OUT
X6
6 poliger Western
+5V
0V
UFW IN
LS
+24V
UFW OUT
X7
(Option)
Lichtschranke
9 poliger D-SUB
RxD
TxD
0V
X0
RS232-Schnittstelle
17
18
19
20
21
22
23
24
25

PFAFF® Industrial



Europäische Union
Wachstum durch Innovation – EFRE



PFAFF Industriesysteme
und Maschinen AG

Hans-Geiger-Str. 12 - IG Nord
D-67661 Kaiserslautern

Phone: +49-6301 3205 - 0
Fax: +49-6301 3205 1386
E-mail: info@pfaff-industrial.com

Hotlines:

Technical service:	+49-175/2243-101
Application consultance:	+49-175/2243-102
Spare-parts hotline:	+49-175/2243-103

Printed in Germany

© PFAFF Industriesysteme und Maschinen AG 2009, PFAFF is the exclusive trademark of VSM Group AB.PFAFF Industriesysteme und Maschinen AG is an authorized licensee of the PFAFF trademark.