PFAFF® Industrial

937

ADJUSTMENT MANUAL

This Adjustment Manual is valid for machines from the following serial numbers onwards:
 # 2 705 763 →

296-12-18 587/002
Justieranleitung engl. 01.13

The reprinting, copying or translation of PFAFF Service Manuals, whether in whole or in part, is only permitted with our previous authorization and with written reference to the source.

PFAFF Industriesysteme
und Maschinen AG

Hans-Geiger-Str. 12 - IG Nord
D-67661 Kaiserslautern

Contents .....Page

1	**Adjustment**	**5**
1.01	Tools, gauges and other accessories for adjusting	5
1.02	Abbreviations	5
1.03	Explanation of the symbols	5
1.04	Check and adjustment aid	6
1.05	Adjusting the basic machine	7
1.05.01	Balancing weight	7
1.05.02	Centering the needle in the needle hole (in sewing direction)	8
1.05.03	Parallel guiding of the needle bar	9
1.05.04	Locking lever	10
1.05.05	Zero stitch and zigzag stitch scale	11
1.05.06	Centering the needle in the needle hole (crosswise to sewing direction)	12
1.05.07	Zigzag stitch width	13
1.05.08	Zigzag stitch movement	14
1.05.09	Needle penetration symmetry - left, centre and right	15
1.05.10	Needle position adjustment lever	16
1.05.11	Adjustment wheels for the top feed (on machines without -918/14)	17
1.05.12	Zeroing the differentiation (on machines without -918/14)	18
1.05.13	Synchronizing the top and bottom feed (on mchines with -918/14)	19
1.05.14	Position of the stitch length adjustment wheel (on machines without -918/14)	20
1.05.15	Position of the stitch length adjustment wheel (on mchines with -918/14)	21
1.05.16	Zeroing the bottom feed (on machines without -918/14)	22
1.05.17	Zeroing the bottom feed (on machines with -918/14)	23
1.05.18	Vibrating presser connecting rod	24
1.05.19	Zeroing the vibrating presser	25
1.05.20	Torsion spring of the reverse feed lever (on machines without -918/14)	26
1.05.21	Torsion spring of the reverse feed lever (on machines with -918/14)	27
1.05.22	Torsion spring of the differentiation regulating shaft (on machines without -918/14)	28
1.05.23	Torsion spring of the differentiation regulating shaft (on machines with -918/14)	29
1.05.24	Feeding motion of the bottom feed dog	30
1.05.25	Lifting motion of the bottom feed dog	31
1.05.26	Drive belt in the gearbox housing	32
1.05.27	Hook bearing bracket	33
1.05.28	Hook lubrication	34
1.05.29	Pre-adjusting the needle height	35

Contents ..... Page

1.05.30	Needle rise, hook-to-needle clearance and bobbin case positioning-finger	36
1.05.31	Final adjustment of the needle height	37
1.05.32	Bobbin case opener position	38
1.05.33	Bobbin case opener motion	39
1.05.34	Bottom feed dog height	40
1.05.35	Clearance between presser foot and needle plate	41
1.05.36	Vibrating presser feed and connecting lever	42
1.05.37	Vibrating presser stroke	44
1.05.38	Vibrating presser lifting motion	45
1.05.39	Vibrating presser feeding motion	46
1.05.40	Feeding motion difference	47
1.05.41	Vibrating presser and presser foot pressure	48
1.05.42	Thread diverter pin	49
1.05.43	Limiting the knee lever stroke	50
1.05.44	Knee lever play	51
1.05.45	Bobbin winder	52
1.06	Adjusting the thread trimmer -900/24	53
1.06.01	Axial position of the control cam	53
1.06.02	Preliminary adjustment of the control cam	54
1.06.03	Position of the thread catcher and cutting test	55
1.06.04	Readjustment of the control cam	56
1.06.05	Needle thread tension release	57
2	Switch diagrams	58
2.01	Pneumatics-switch diagram	58
2.02	Circuit diagrams	59

1 Adjustment



On the PFAFF 937 do not use a screw clamp on the needle bar! The special coating of the needle bar could be damaged.



Please observe all notes from Chapter 1 Safety of the instruction manual! In particular care must be taken to see that all protective devices are refitted properly after adjustment, see Chapter 1.06 Danger warnings of the instruction manual!
If not otherwise stated, the machine must be disconnected from the electrical power supply.
Danger of injury due to unintentional starting of the machine!

Notes on adjustment

All following adjustments are based on a fully assembled machine and may only be carried out by expert staff trained for this purpose. Machine covers, which have to be removed and replaced to carry out checks and adjustments, are not mentioned in the text.
The order of the following chapters corresponds to the most logical work sequence for machines which have to be completely adjusted. If only specific individual work steps are carried out, both the preceding and following chapters must be observed.
Screws, nuts indicated in brackets ( ) are fastenings for machine parts, which must be loosened before adjustment and tightened again afterwards.

1.01 Tools, gauges and other accessories for adjusting

- 1 set of screwdrivers with blade widths from 2 to 10 mm
- 1 set of wrenches with jaw widths from 7 to 14 mm
- 1 set of Allan keys from 1.5 to 6 mm
- 1 metal rule, (Part No. 08-880 218-00)
- Feed dog adjustment gauge, part no. 91-119 995-05
- 1 adjustment pin (5 mm dia.), Part No.. 13-030 341-05
- Hook bearing adjustment gauge, part no. 91-119 996-05

1.02 Abbreviations

TDC = top dead center
BDC = bottom dead center

1.03 Explanation of the symbols

In this adjustment manual, symbols emphasize operations to be carried out or important information. The symbols used have the following meaning:



Note, information

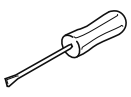

Service, repair, adjustment, maintenance

(work to be carried out by qualified staff only)

1.04 Check and adjustment aid

By blocking with holes **1** - **5** the required needle bar positions can be fixed exactly.

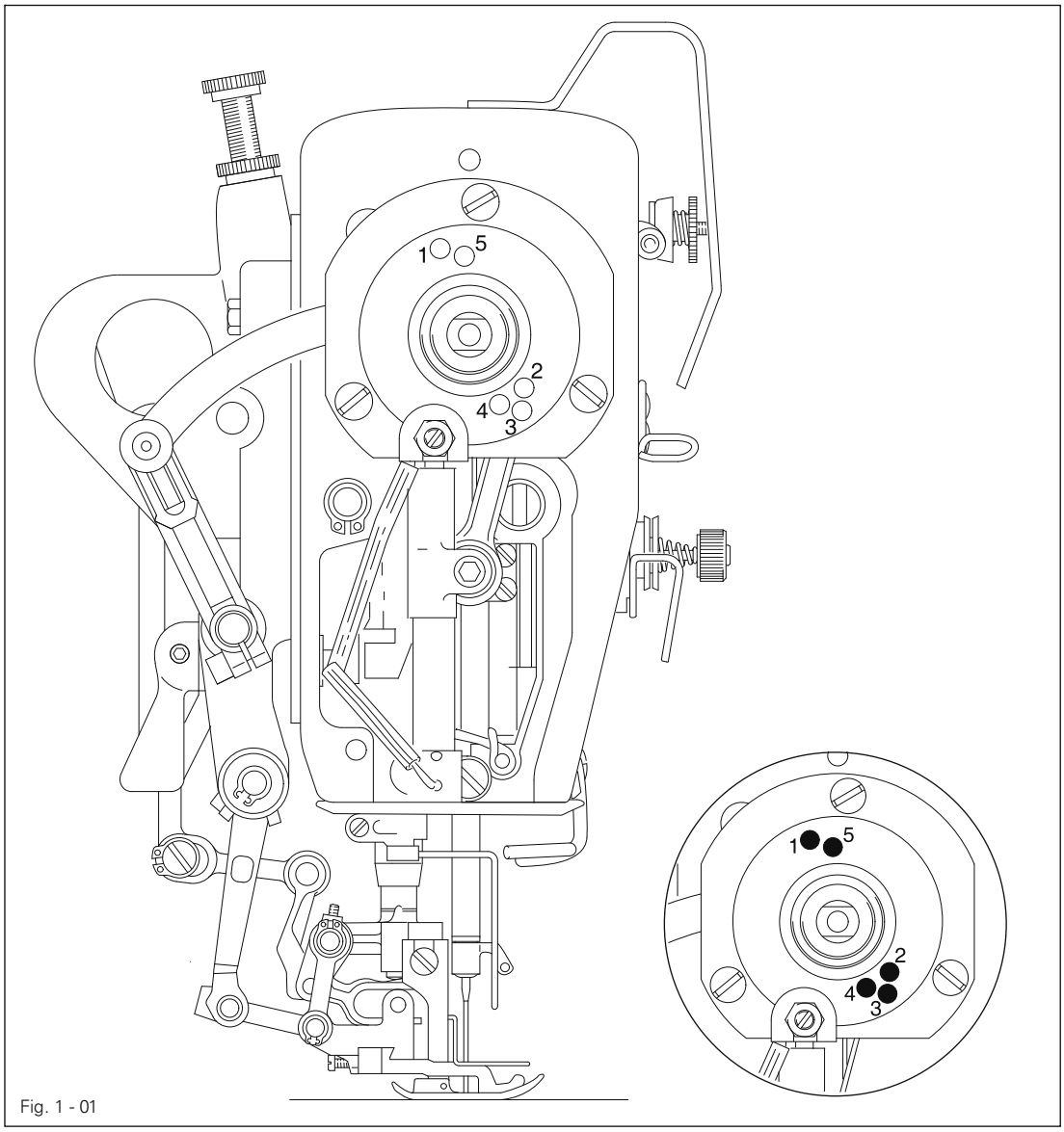

Fig. 1 - 01

- Turn the balance wheel until the needle bar has approximately reached the required position.
- Place the **5 mm** blocking pin in the appropriate hole and put pressure on it.
- Turn the balance wheel forwards and backwards a little until the blocking pin moves into the slot in the crank behind the bearing plate, thus blocking the machine.

Hole 1 = **2.0 mm** after the bottom dead center of the needle bar (2.0 past tdc)
Hole 2 = Top dead center of the needle bar (tdc)
Hole 3 = **0.25 mm** after the top dead center of the needle bar (0.25 past bdc)
Hole 4 = **1.0 mm** after the top dead center of the needle bar (1.0 **mm** past tdc)
Hole 5 = **4 mm** after the bottom dead center of the needle bar (4.0 past bdc)

1.05 Adjusting the basic machine

1.05.01 Balancing weight

Requirement
With the needle bar at bdc the largest eccentricity of the balancing weight **1** must be pointing upwards.

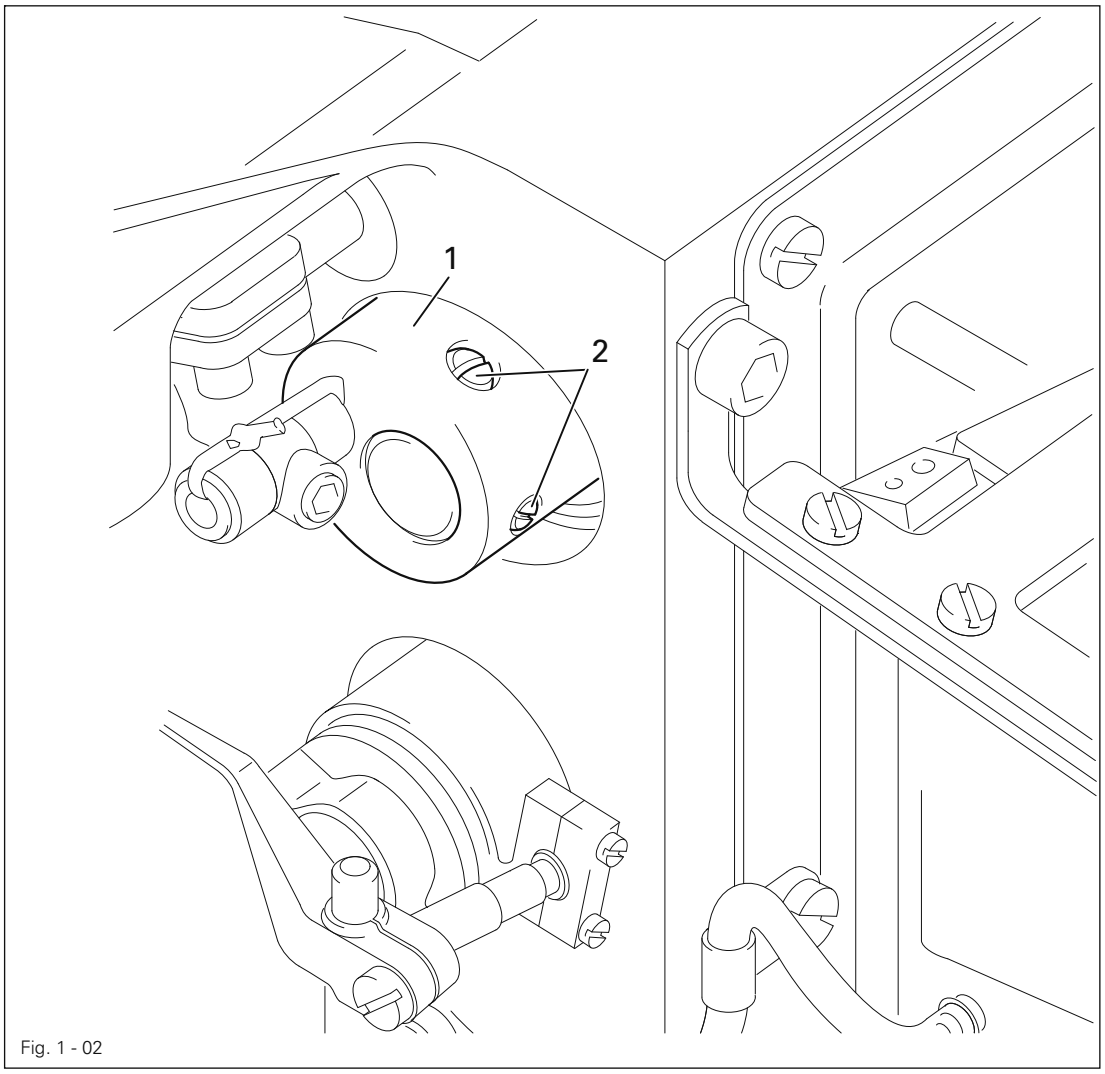

Fig. 1 - 02

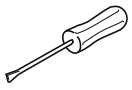

- Bring the needle bar to b.d.c.
- Adjust the balance weight **1** (screw **2**) in accordance with the **requirement**.

1.05.02 Centering the needle in the needle hole (in sewing direction)

Requirement
With the zigzag setting at "**0**" and the needle position set at "**middle**" the needle must enter the center of the needle hole as viewed in the direction of sewing.

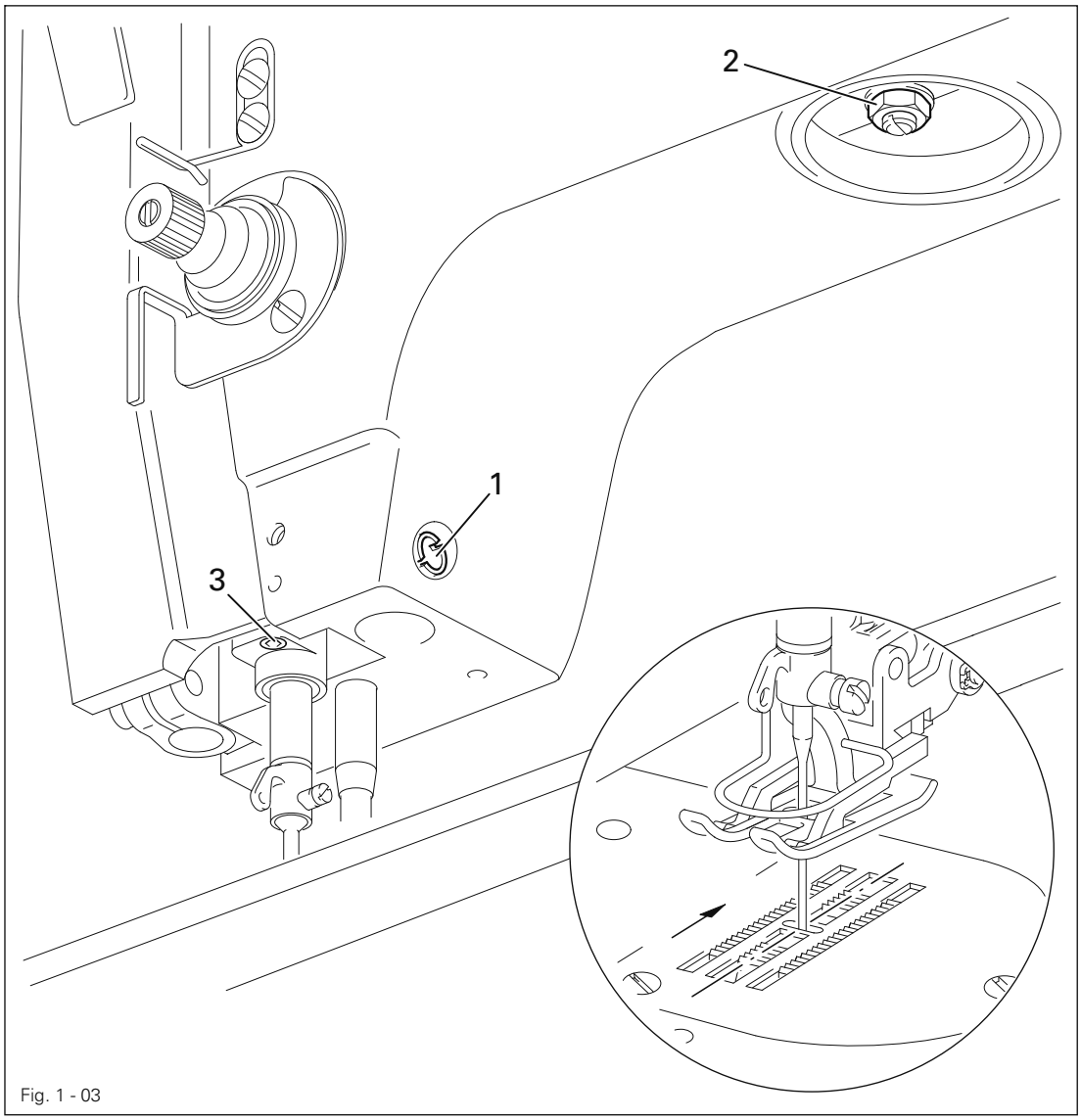

Fig. 1 - 03

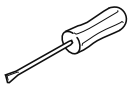

- Bring the needle bar to b.d.c.
- Adjust the eccentric pin **1** (nut **2** and screw **3)** in accordance with the **requirement**.

1.05.03 Parallel guiding of the needle bar

Requirement
Guide bar **5** must be parallel to the needle bar.

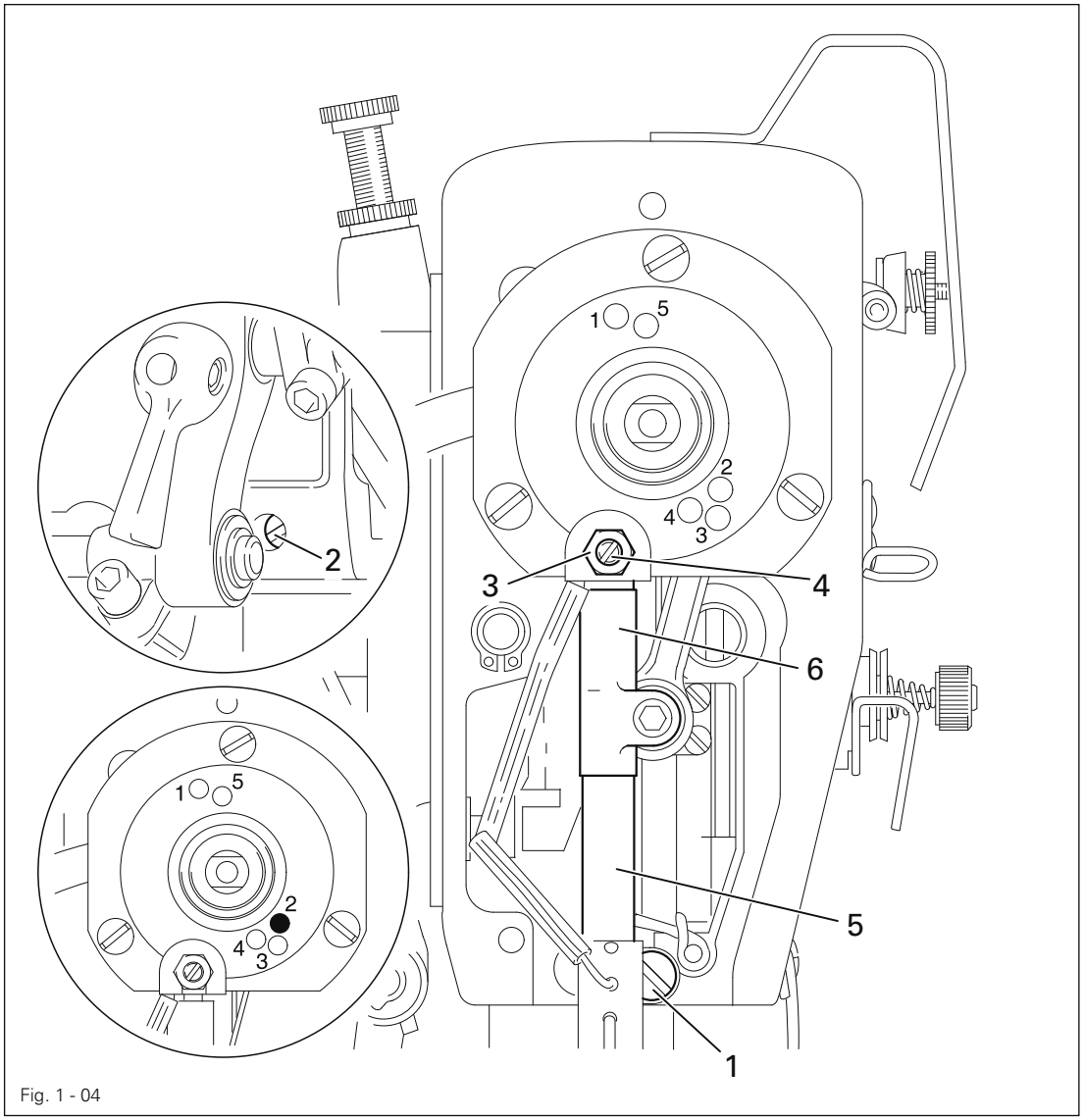

Fig. 1 - 04

- Bring the needle bar to tdc (hole **2**).
- Loosen screws **1**,**2** and nut **3**.
- The largest eccentricity of pin **4** must be facing downwards.
- Bring the groove on guide bar **5** into a position in which it rests against eccentric pin **4**, turn eccentric pin **4** in accordance with the **requirement** and tighten nut **3**.
- Push guide bar **5** downwards and then upwards as far as possible. Bushing **6** must not move laterally during this movement (readjust eccentric pin **4** if necessary).
- Move guide bar **5** until it rests against eccentric pin **4** and tighten screws **1** and **2**.

1.05.04 Locking lever

Requirement
The zigzag stitch adjustment lever **3** must be able to be locked in any position.

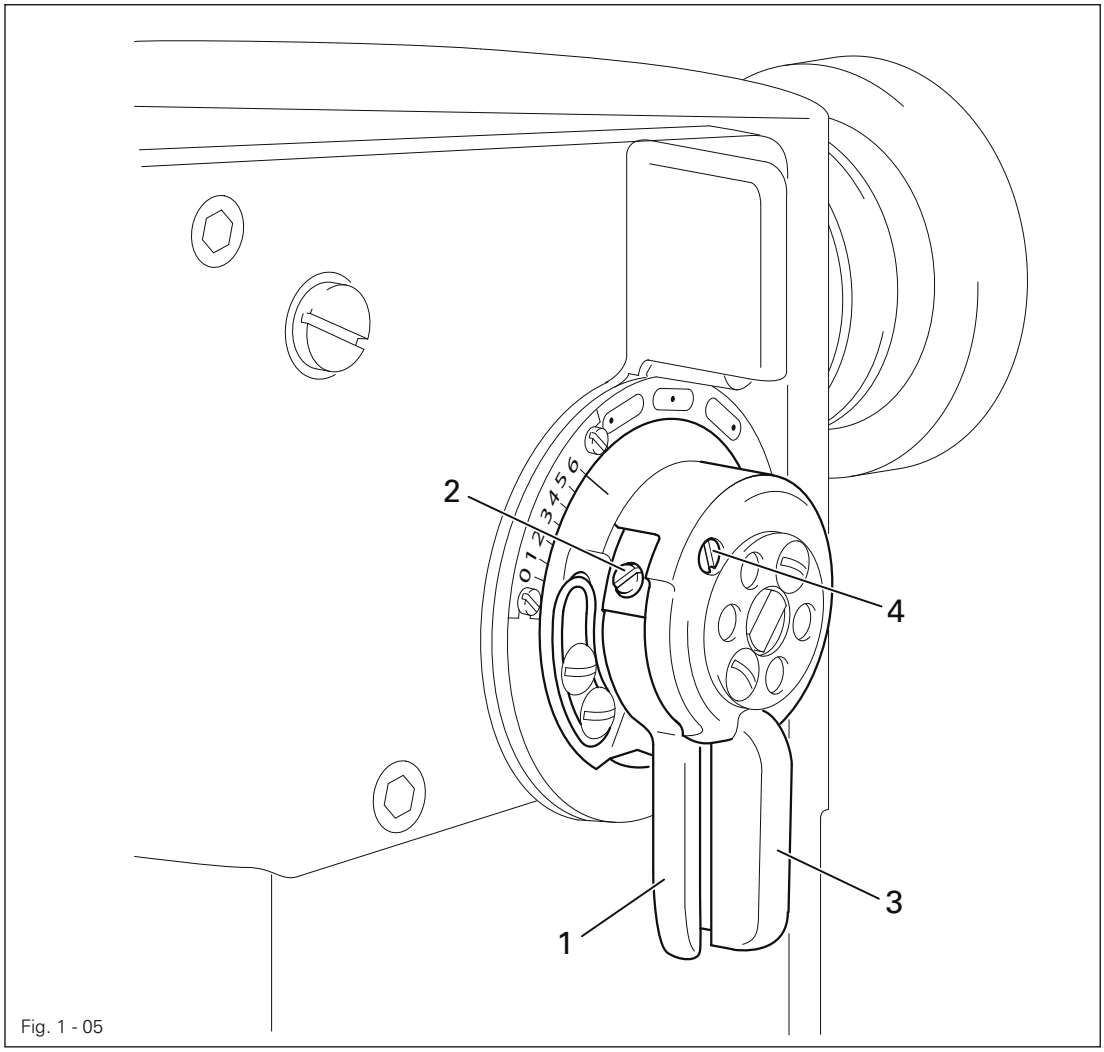

Fig. 1 - 05

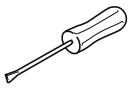

- Loosen screw **2.**
- Press locking lever **1** against the zigzag stitch adjustment lever **3.**
- Turn pivot pin **4** as far as possible to the left.
- Release locking lever **1.**
- Locking lever **1** must be parallel to the zigzag stitch adjustment lever **3.**
- Tighten screw **2.**

1.05.05 Zero stitch and zigzag stitch scale

Requirement

With the zigzag stitch set at "**0**":

1. the needle bar must not move laterally when the balancewheel is turned and
2. the marking "**0**" on scale **1** must be at marking **2.**

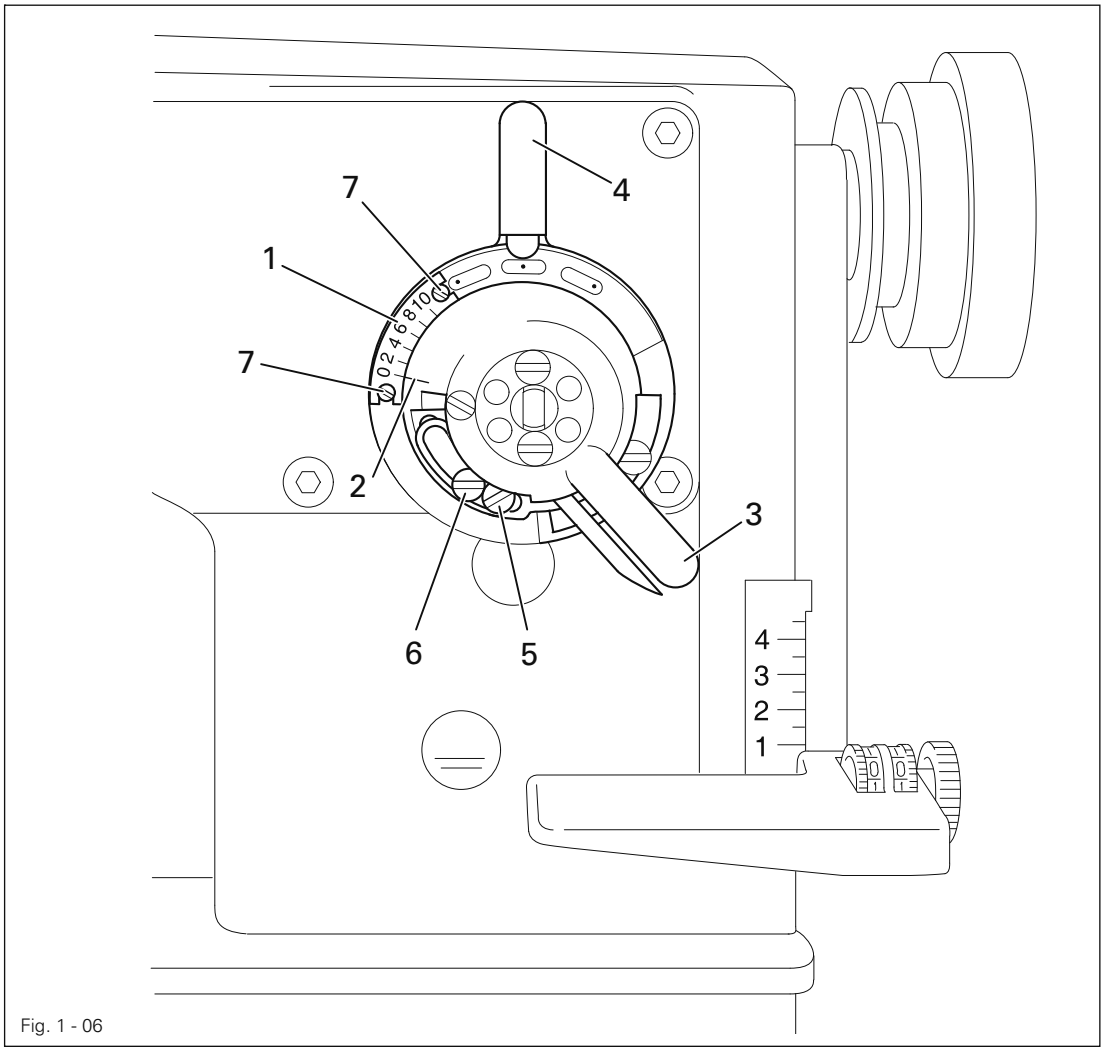

Fig. 1 - 06

- Set the needle position adjustment lever **4** to "**middle**" and loosen screws **5** and **6.**
- Run the machine slowly and turn the zigzag stitch adjustment lever **3** to the right until the needle bar no longer moves laterally.
- Turn the machine off. Move screw **5** to the right until it touches and then tighten it.
- Loosen screws **7** and move scale **1** in accordance with **requirement 2.**
- Tighten screws **7.**

Screw **6** remains loose for the following adjustment.

1.05.06 Centering the needle in the needle hole (crosswise to sewing direction)

Requirement
With the zigzag stitch set at "**0**" and the needle position setting at "**middle**" the needle must enter the center of the needle hole as seen across the direction of sewing.

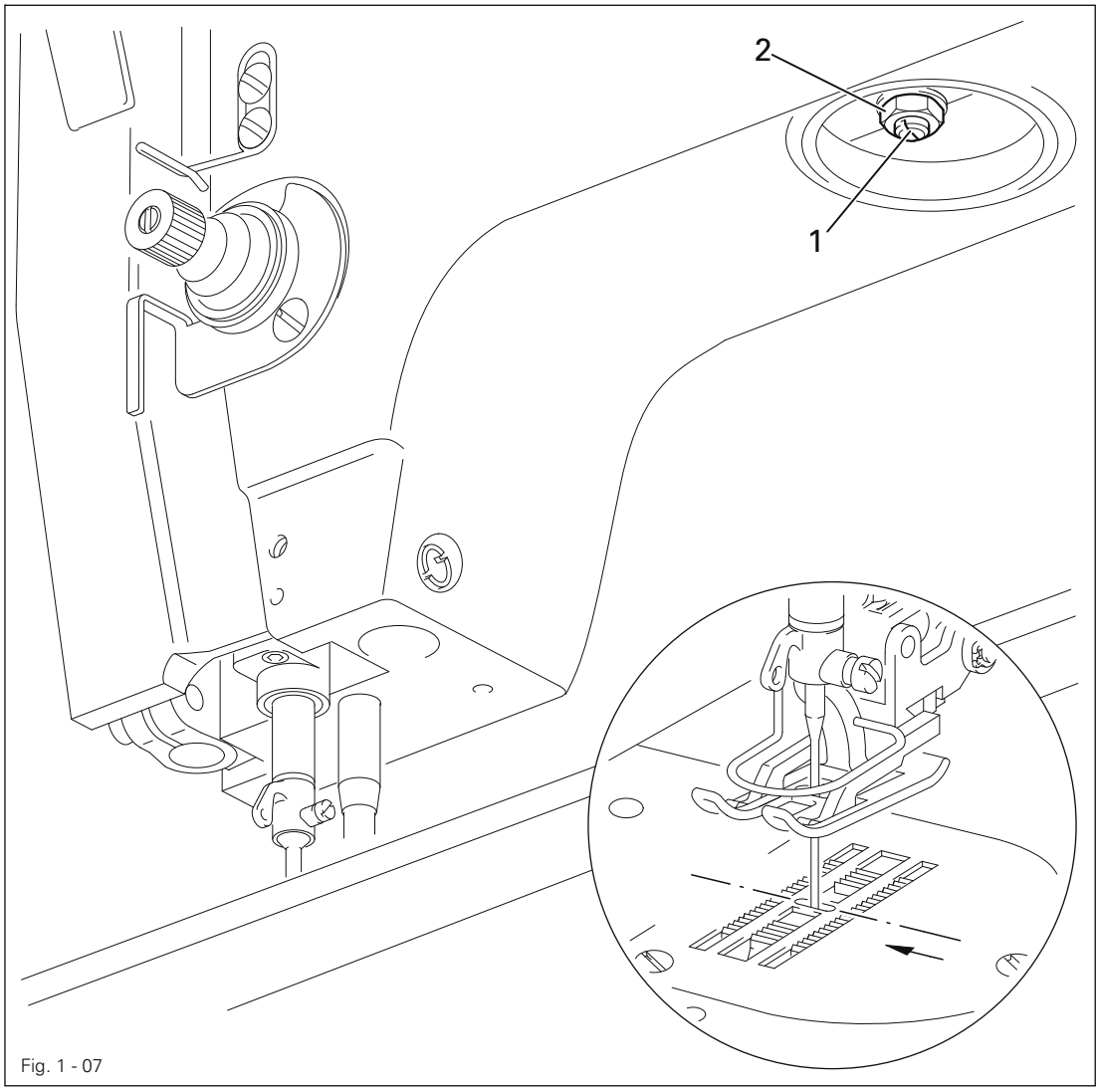

Fig. 1 - 07

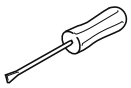

- Adjust the eccentric pin **1** (nut **2)** in accordance with the **requirement**.

1.05.07 Zigzag stitch width

Requirement
At the largest zigzag stitch setting, marking **1** must be at the largest zigzag value on scale **2.**

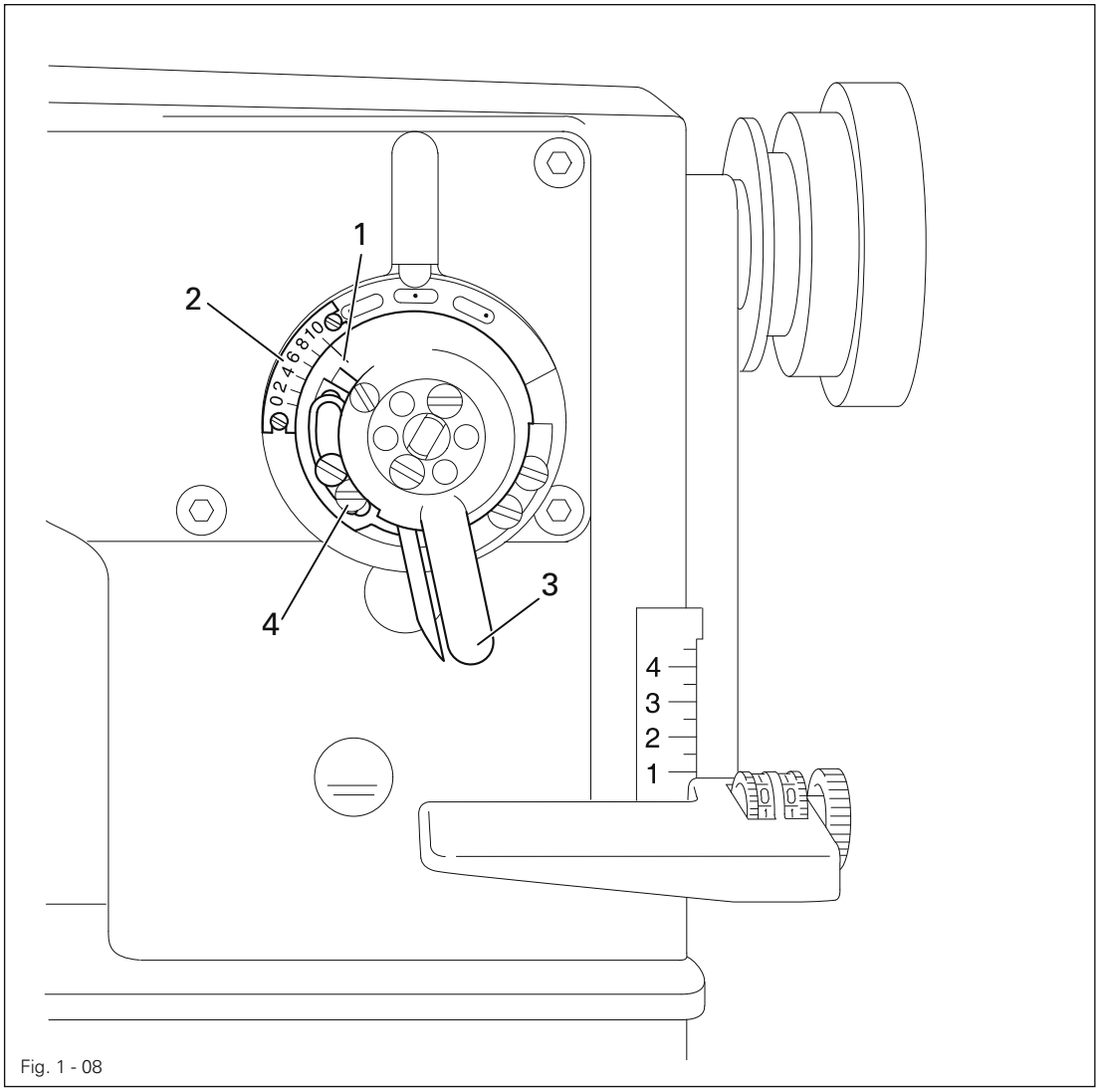

Fig. 1 - 08

- Turn the zigzag stitch adjustment lever **3** in accordance with the **requirement**.
- Move screw **4** upwards until it touches and then tighten it.

If the machine is equipped with a needle plate with a smaller hole than is marked on the scale, the zigzag limit must be set according to the needle hole width on the needle plate.

1.05.08 Zigzag stitch movement

Requirement
When the needle bar, on the right of its throw, is positioned at t.d.c. (adjustment hole "**2**"), the needle bar should not move laterally when the zigzag stitch adjustment lever is moved to and fro.

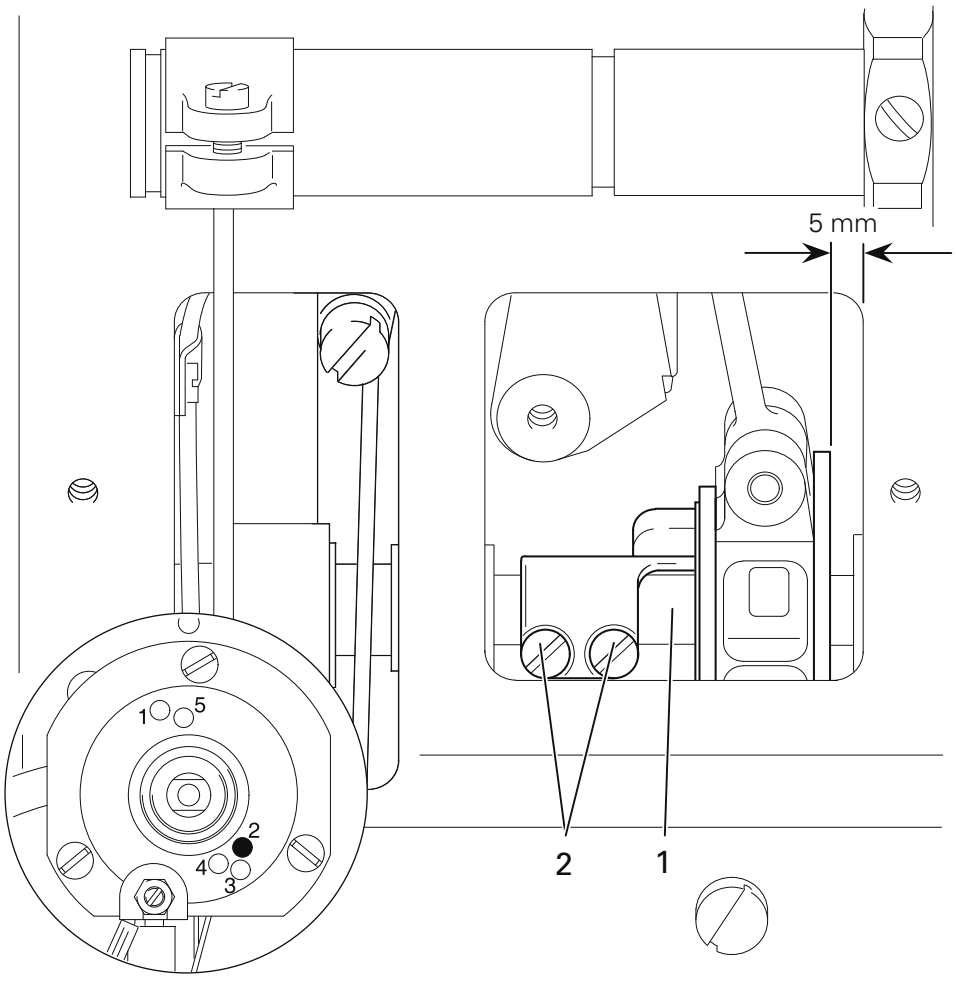

Fig. 1 - 09

- Bring the needle bar, on the right of its throw, to t.d.c. and place the adjustment pin in hole "**2**" of the bearing plate (locking the machine).
- Turn the zigzag eccentric **1** (screws **2**) in accordance with the **requirement**. Make sure that he zigzag eccentric **1** is about **5 mm** away from the right inner side of the casting wall.
- Remove the adjustment pin from the bearing plate.

1.05.09 Needle penetration symmetry - left, centre and right

Requirement
When the zigzag stitch is set at "**0**", the needle should penetrate in the centre of the needle hole. With the maximum zigzag stitch set, the needle should penetrate on the left and right at the same distance from the centre hole.

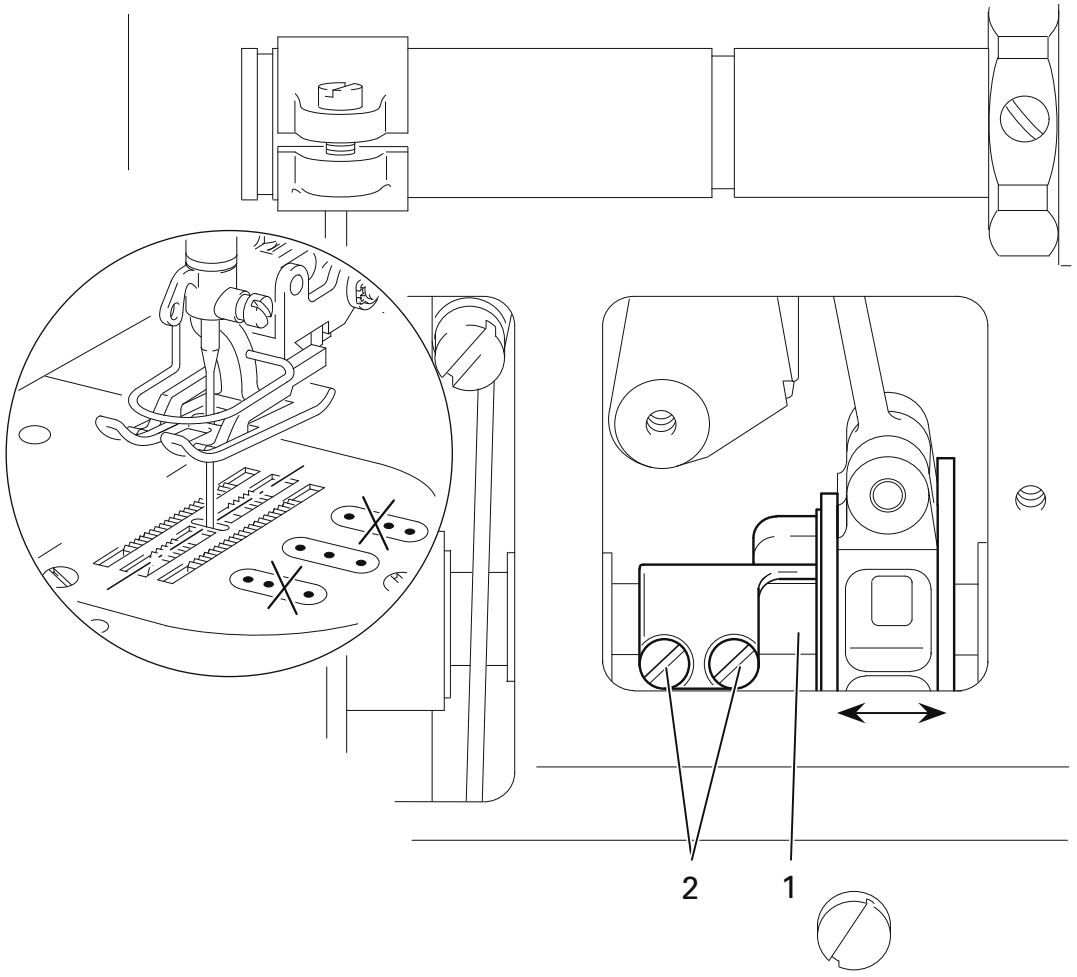

Fig. 1 - 10

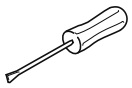

- Let the needle penetrate in the required zigzag settings using paper.
- Without twisting it adjust zigzag eccentric **1** (screws **2**) in accordance with the **requirement**.

1.05.10 Needle position adjustment lever

Requirement
The left and right throws of the needle must be the same size at the largest zigzag stitch setting and at the left or right needle position.

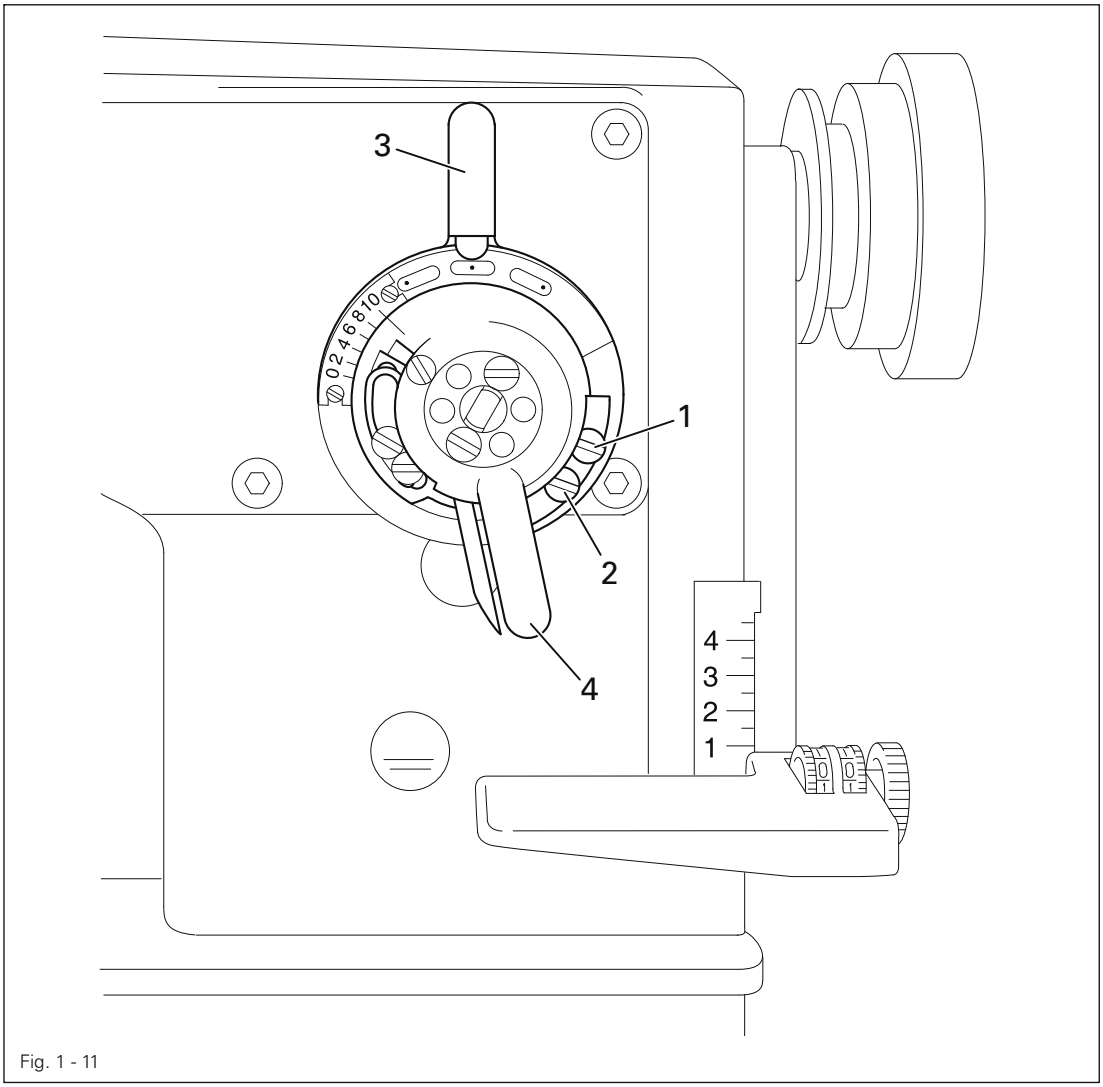

Fig. 1 - 11

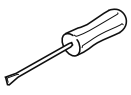

- Loosen screws **1** and **2.**
- Set the needle position adjustment lever **3** to "**middle**" and the zigzag stitch adjustment lever **4** at the largest zigzag stitch.
- Place a piece of paper underneath the presser foot and perforate it to the left and right with the needle.
- Set the zigzag stitch adjustment lever **4** at "**0**" and move the needle position adjustment lever **3** to the right/left until the needle is exactly over the perforations made in the last step.
- For the left needle-position bring screw **1** to a position where it touches and tighten it and for the right needle-position do the same with screw **2.**

1.05.11 Adjustment wheels for the top feed (on machines without -918/14)

Requirement
With guide pin **3** in the middle of the connecting link and the ends of the toothed racks **4** flush with each other, the zero markings on the adjustment wheels **2** must be at marking **5.**

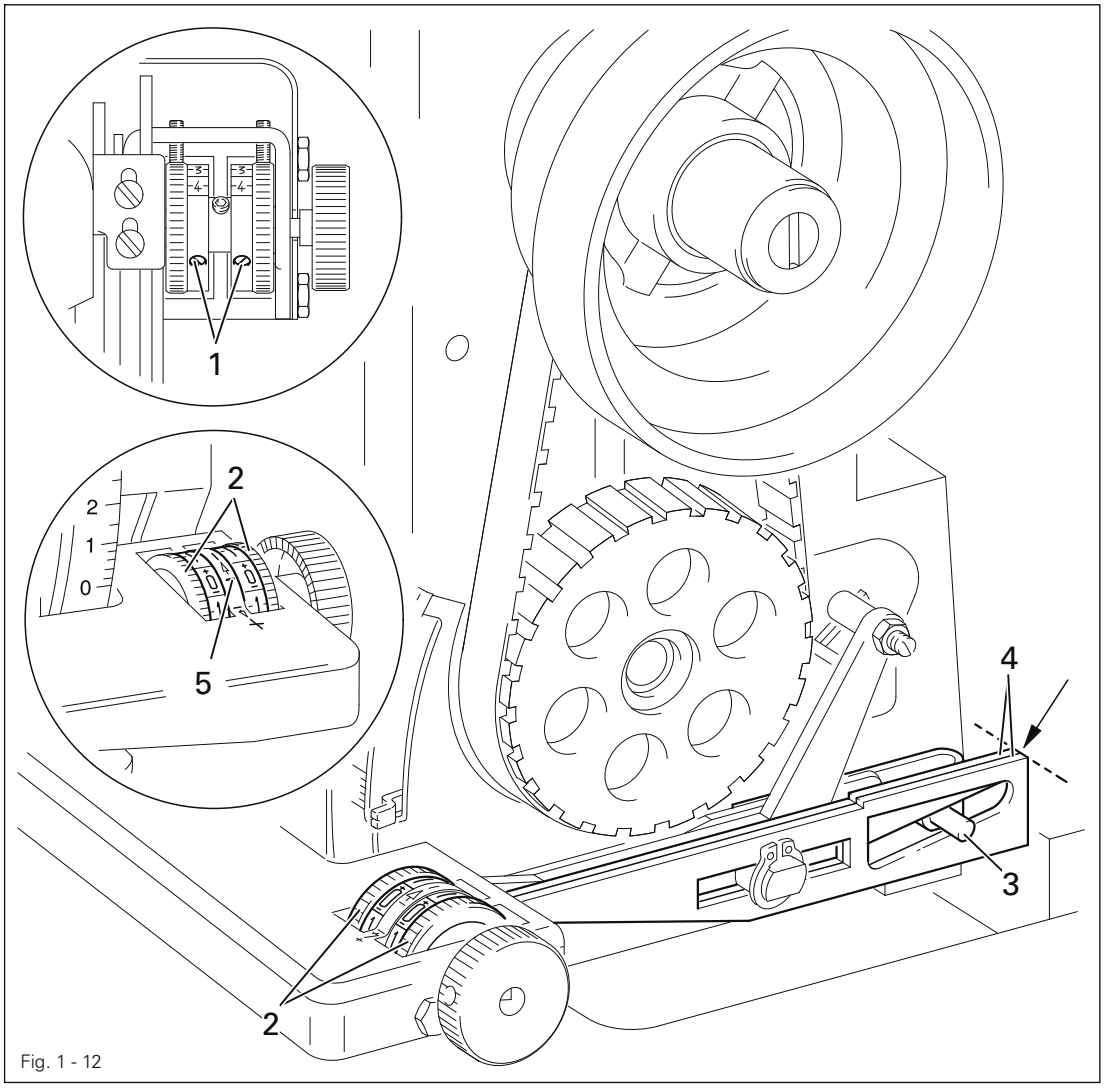

Fig. 1 - 12

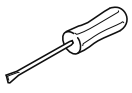

- Loosen screws **1.**
- Turn both adjustment wheels **2** until guide pin **3** is in the middle of the connecting link. The ends of the two toothed racks **4** must be flush with each other.
- Turn both scale rings in accordance with the **requirement** and tighten screws **1.**

1.05.12 Zeroing the differentiation (on machines without -918/14)

Requirement
At the longest stitch-length setting, the reverse sewing button **11** must be at its highest position. In addition, the stop finger **8** of clamp crank **7** must be touching the upper regulating shaft.

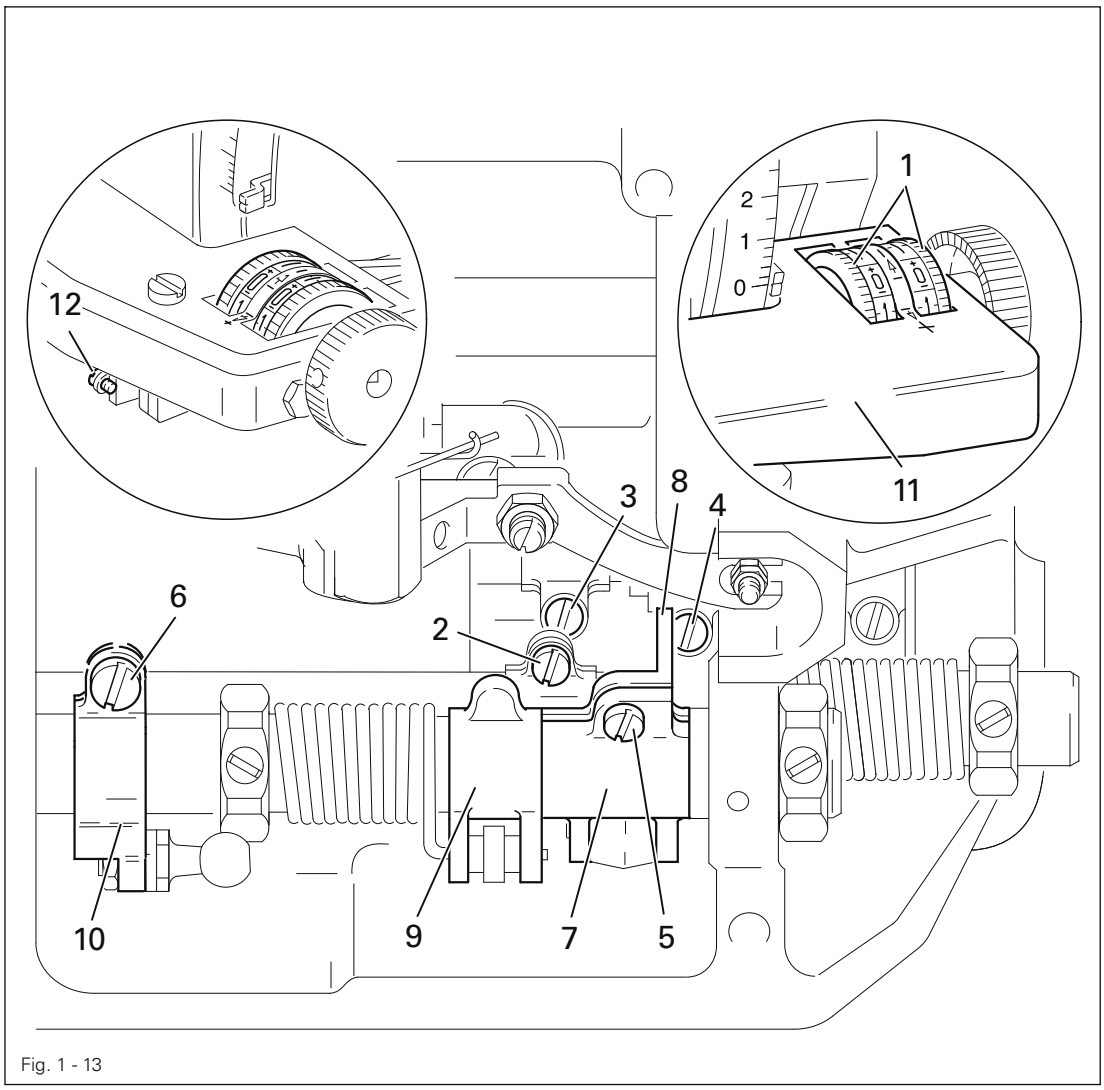

Fig. 1 - 13

- Unscrew screw **12** and the needle plate on machines with stitch length N**24.**
- Set both adjustment wheels **1** at "**0**".
- Loosen screws **2, 3, 4, 5** and **6.**
- Adjust reverse sewing key **11** and clamp crank **7** with stop finger **8** in accordance with the **requirement** and tighten screws **4** and **5.**
- Turn clamp crank **9** until it is parallel with clamp crank **7,** and tighten srews **2** and **3.**
- Turn clamp crank **10** so that it is parallel with the bedplate and tighten screws **6.**
- On machines with stitch length N**24,** tighten screw **12** and fit the needle plate.

1.05.13 Synchronizing the top and bottom feed (on mchines with -918/14)

Requirement
With the stitch length set at "**1.5**" and both levers **1** in the "**0**" position, when the balance wheel is turned the top and bottom feed dogs should travel the same path.

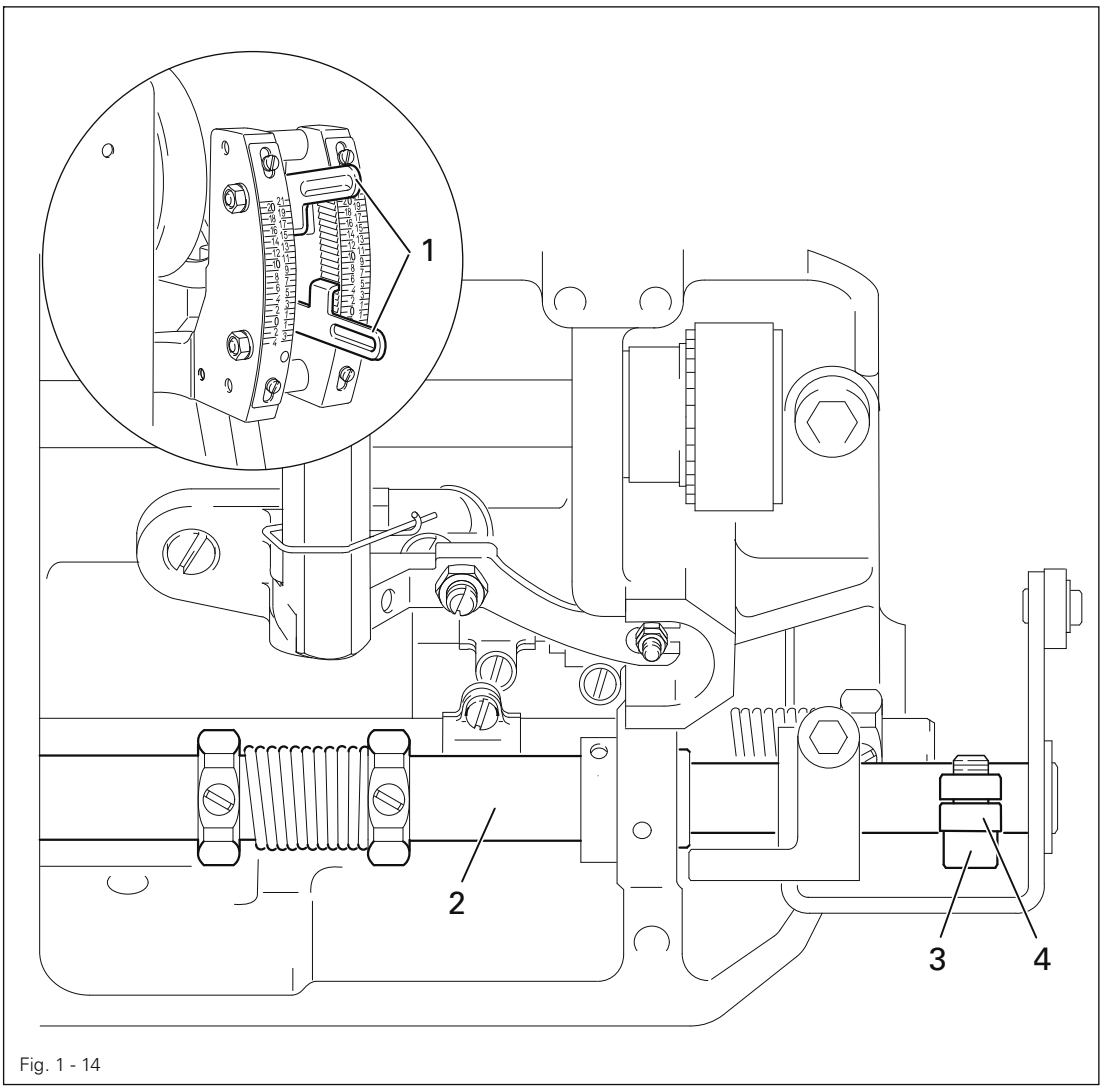

Fig. 1 - 14

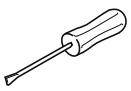

- Set the stitch length at "**1.5**" and set both levers **1** at "**0**".
- While constantly turning the balance wheel, adjust shaft **2** (screw **3**) in accordance with the **requirement**.
- Bring clamp crank **4** to its top position and tighten screw **3.**

1.05.14 Position of the stitch length adjustment wheel (on machines without -918/14)

Requirement
When adjustment wheel **1** is turned as far forward as possible, the pointer **4** should be positioned exactly opposite the mark "**0**" on scale **5.**

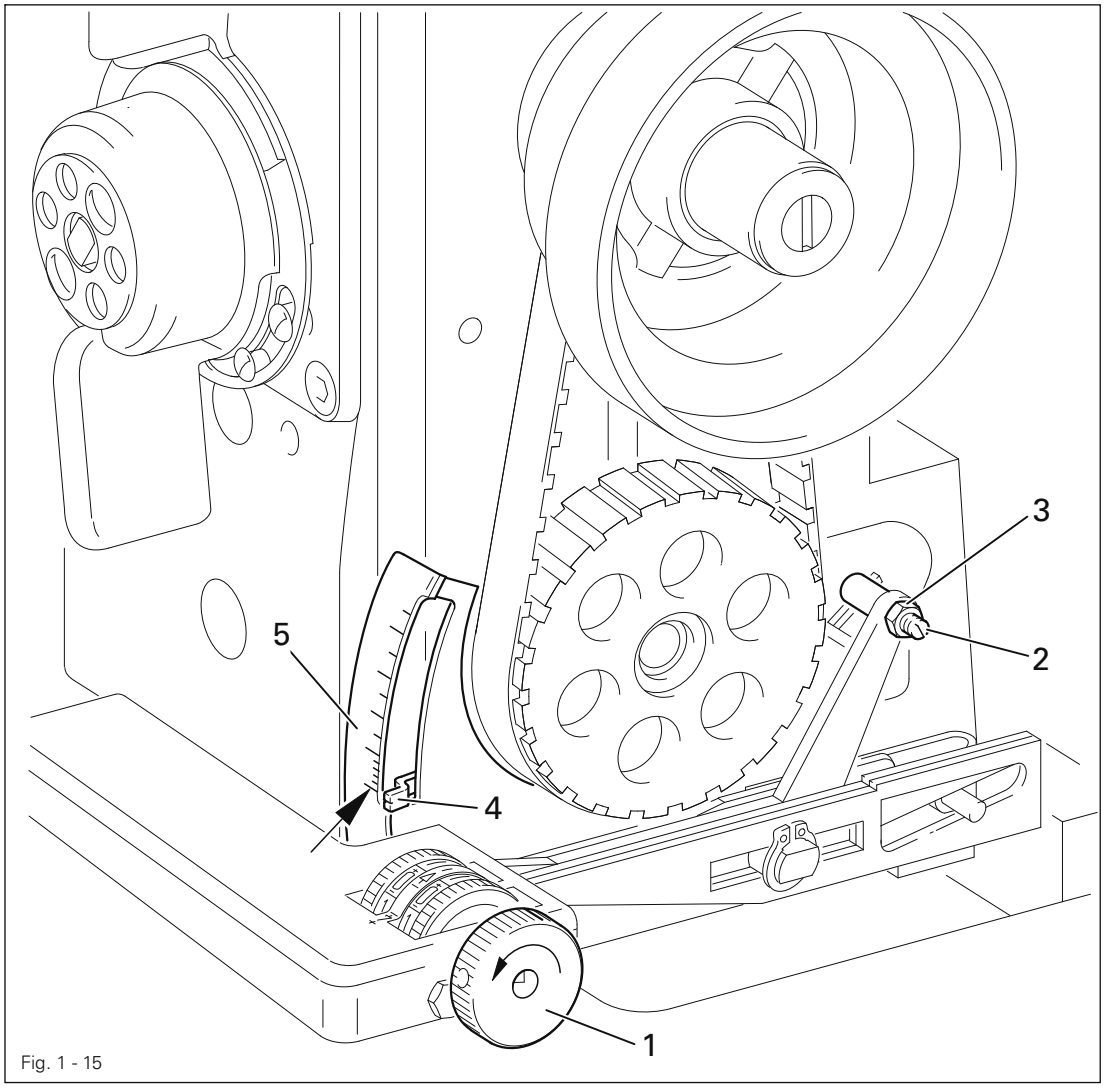

Fig. 1 - 15

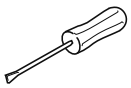

- Set the stitch length at "**0**" on the adjustment wheel **1.**
- Adjust eccentric **2** (nut **3)** in accordance with the **requirement**.

1.05.15 Position of the stitch length adjustment wheel (on mchines with -918/14)

Requirement
When adjustment wheel **1** is turned as far forward as possible, the marking for "**0**" on adjustment wheel **1** and the marking on the reverse feed control should match.

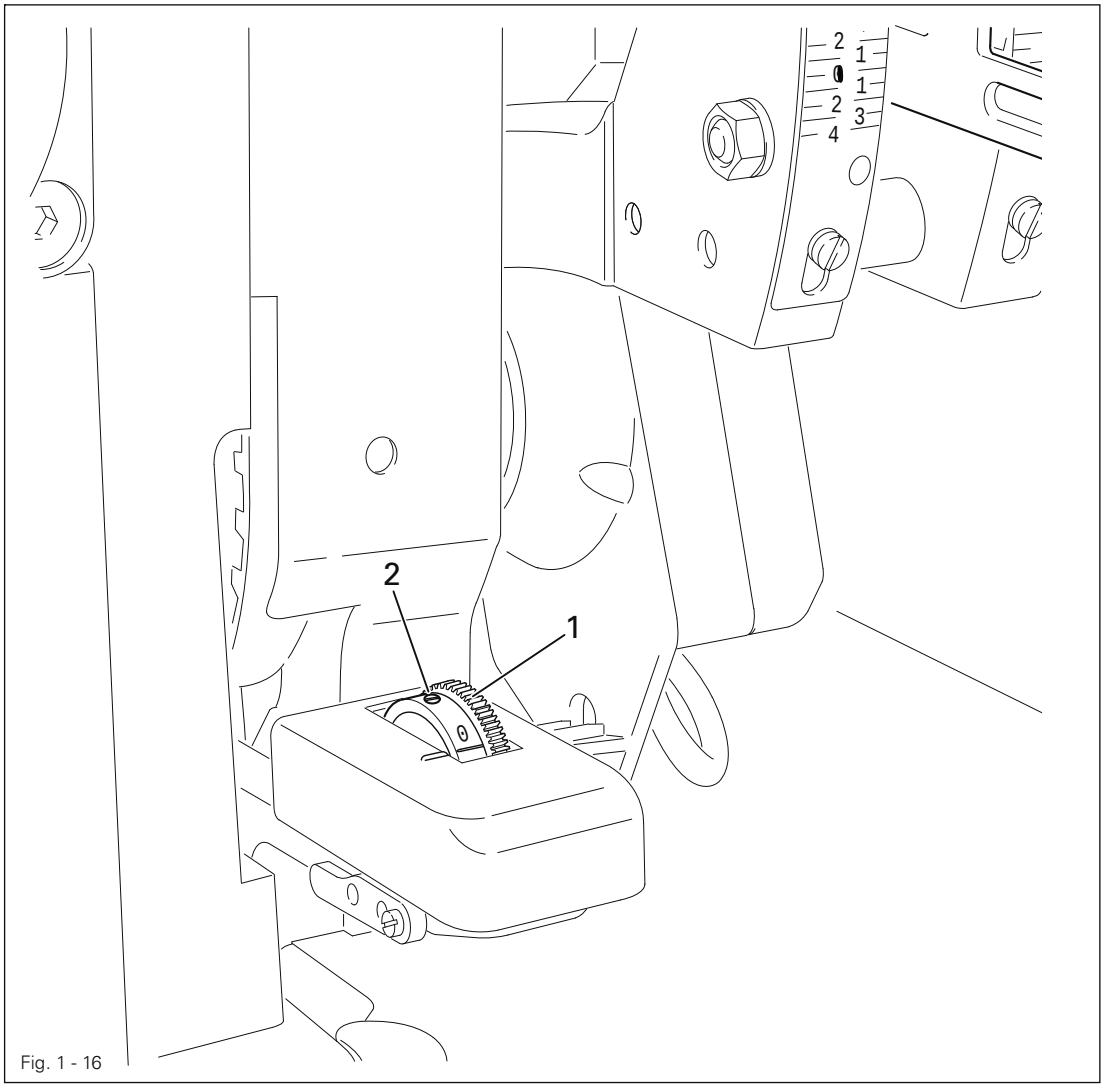

Fig. 1 - 16

- Adjust adjustment wheel **1** (screw **2)** in accordance with the **requirement**.

1.05.16 Zeroing the bottom feed (on machines without -918/14)

Requirement
With the stitch length set at "**0**" the bottom feed dog must not carry out any feeding motion when the balance wheel is turned.

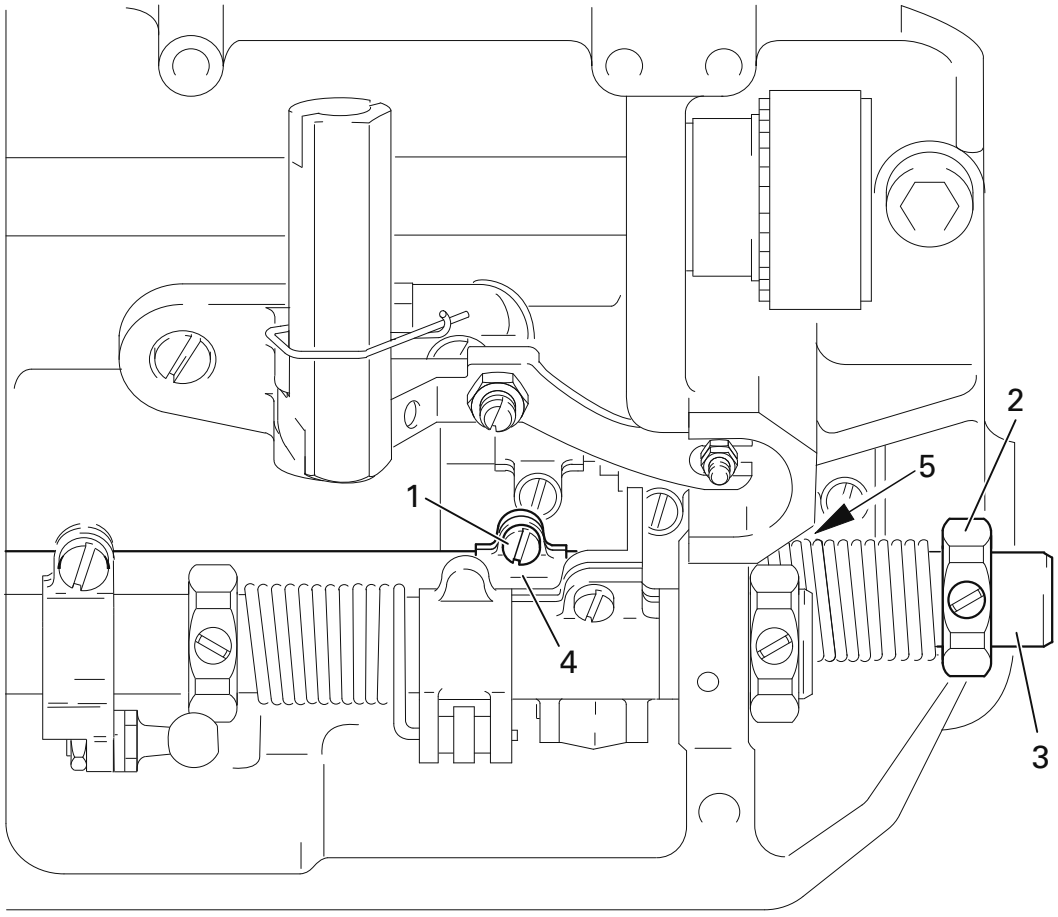

Fig. 1 - 17

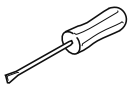

- Loosen screw **1.**
- Place the open-ended wrench (**SW 27**) on torsion nut **2** and use it to hold regulating shaft **3** still.
- While continuously turning the balance wheel, turn the open-ended wrench on torsion nut **2** in accordance with the **requirement**.
- In this position move regulating crank **4** and circlip **5** so that they are touching the casting and tighten screw **1.**
- Carry out a check in accordance with the **requirement**.

1.05.17 Zeroing the bottom feed (on machines with -918/14)

Requirement
With the stitch length set at "0" the bottom feed dog must not carry out any feeding motion when the balance wheel is turned.

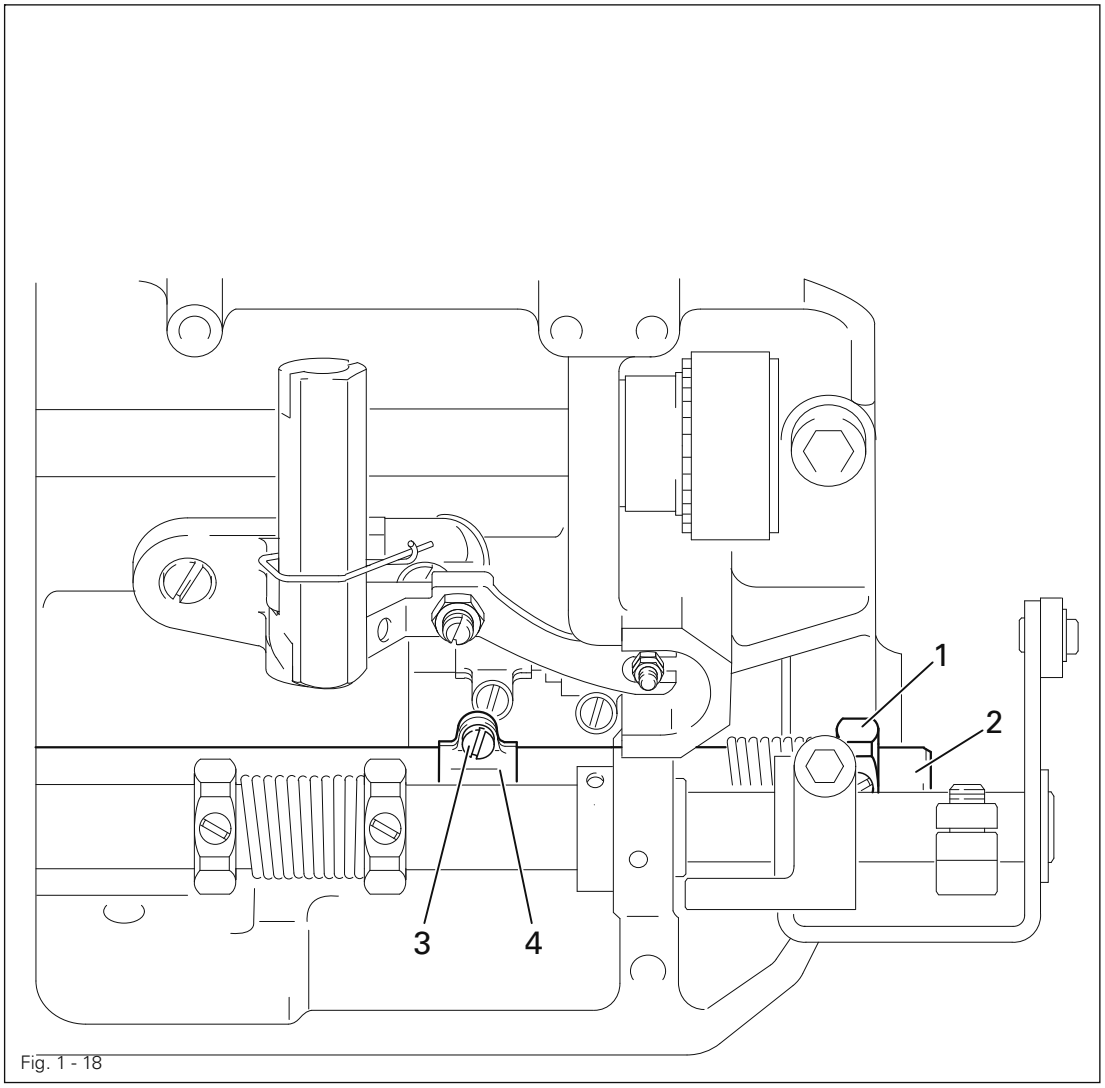

Fig. 1 - 18

- Set the stitch length at "**0**".
- Place the open-ended wrench (**SW 27**) on torsion nut **1** and use it to hold regulating shaft **2** still.
- Loosen screw **3**.
- While continuously turning the balance wheel, turn the open-ended wrench on torsion nut **1** in accordance with the **requirement**.
- In this position, move adjustment crank **4** against the cast iron case and tighten screw **3**.
- Carry out a check in accordance with the **requirement**.

1.05.18 Vibrating presser connecting rod

Requirement
With the stitch length set at "**0**", crank **3** on vibrating presser connecting rod **1** must be horizontal.

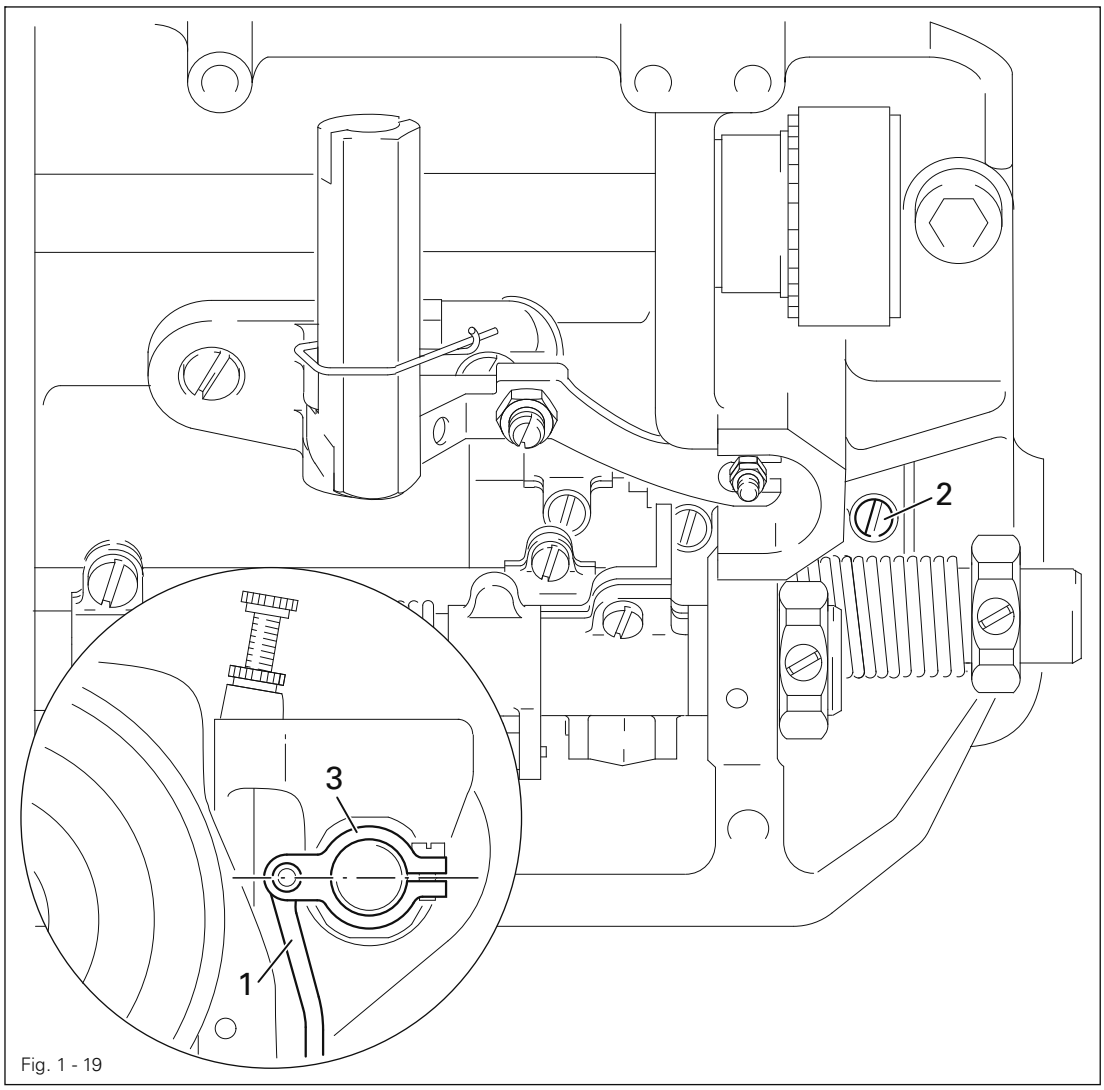

Fig. 1 - 19

- Move vibrating presser connecting rod **1** (screw **2**) in accordance with the **requirement**.

1.05.19 Zeroing the vibrating presser

Requirement
With the adjusting dials **3** (on machines with **-918/14,** adjusting lever **3)** in the "**0**" position and the stitch length set at "**0**", there should be no feeding motion of the top feed dog when the balance wheel is turned.

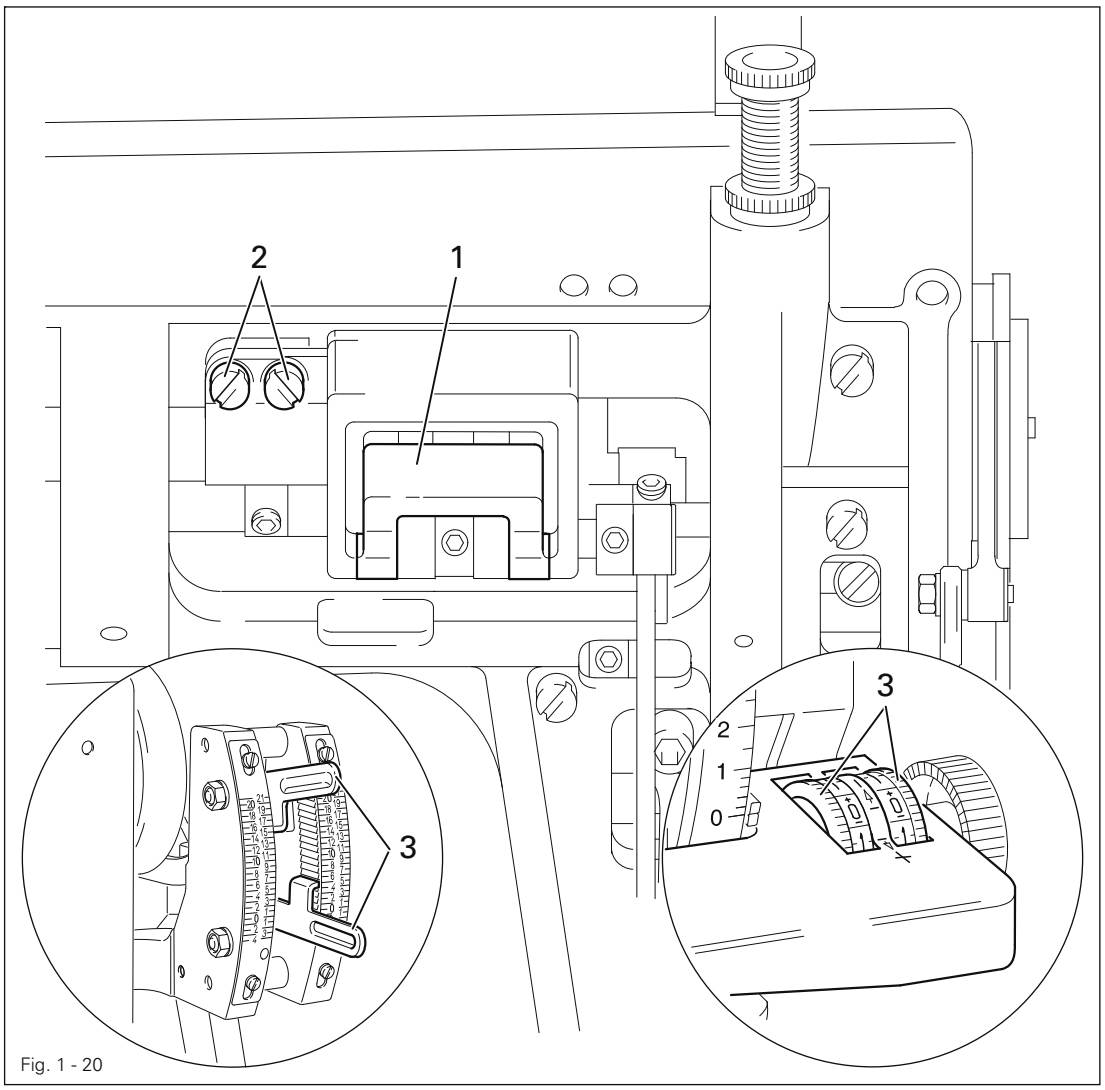

Fig. 1 - 20

- Turn diverter crank **1** (screw **2**) in accordance with the **requirement**.

1.05.20 Torsion spring of the reverse feed lever (on machines without -918/14)

Requirement
With the presser foot raised, the longest stitch length set and the adjustment wheels **5** at "**0**", the reverse feed lever **4** must return automatically to its uppermost point after being activated.

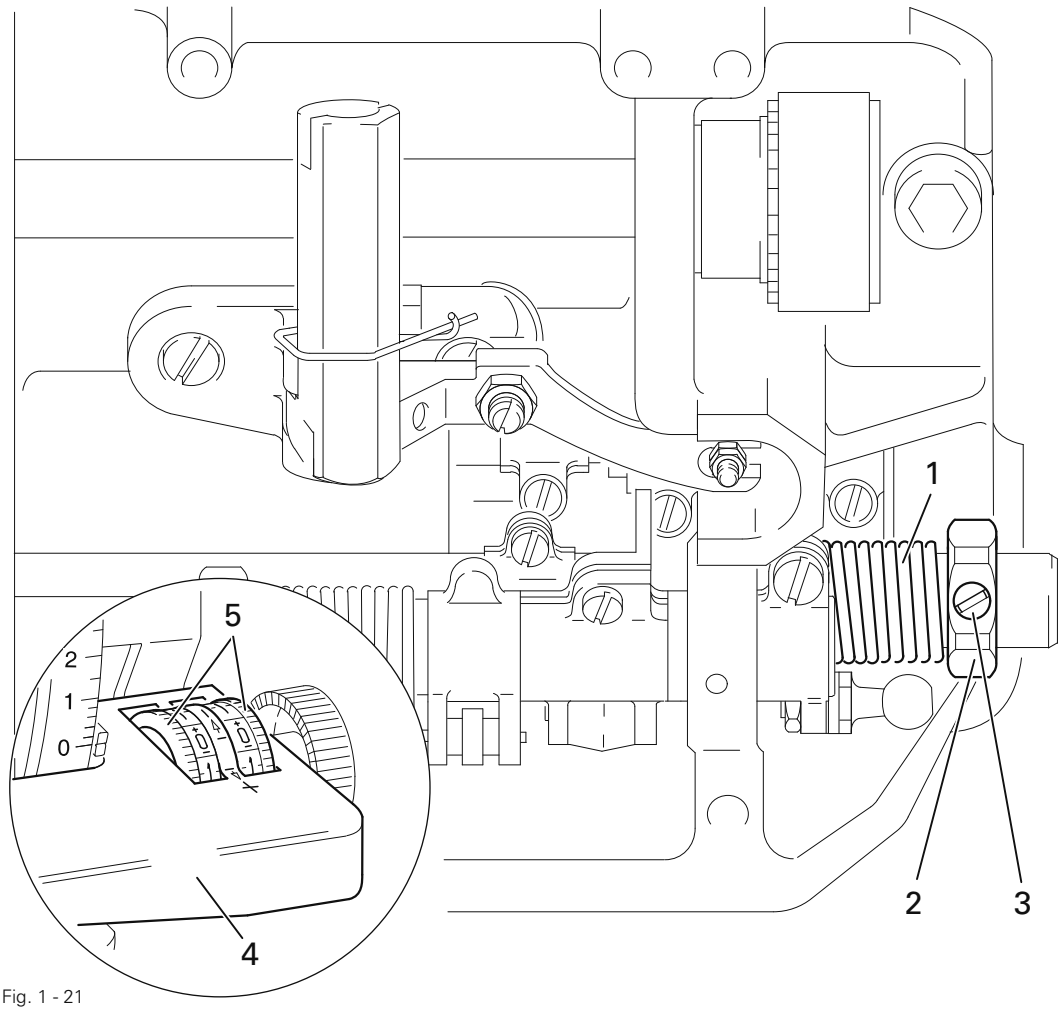

Fig. 1 - 21

- Turn torsion spring **1** in accordance with the **requirement** using nut **2** (screw **3**).

1.05.21 Torsion spring of the reverse feed lever (on machines with -918/14)

Requirement
With the presser foot raised, the longest stitch length set and the adjustment lever **4** at "**0**", the reverse feed lever **5** must return automatically to its uppermost point after being activated.

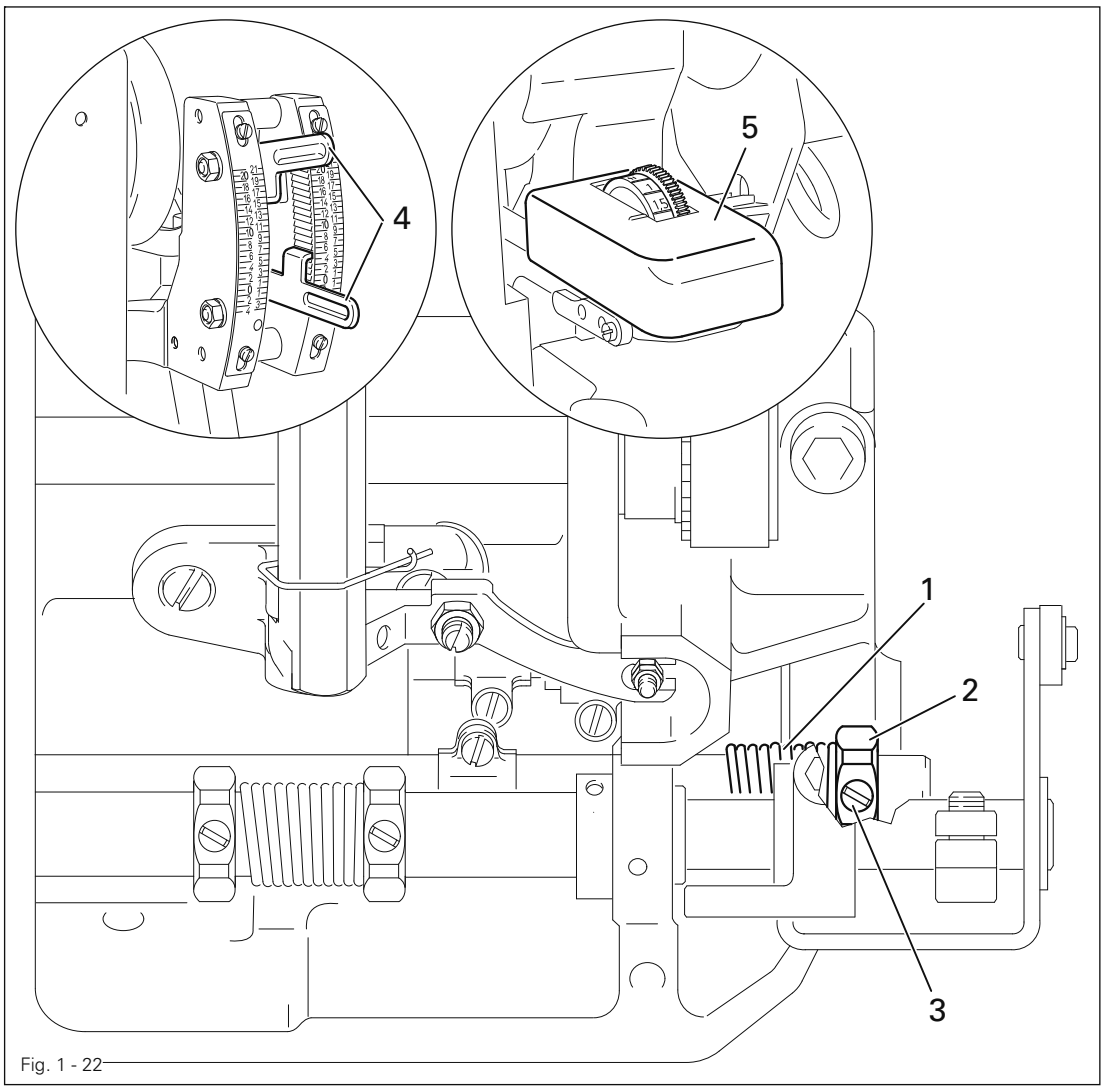

Fig. 1 - 22

- Turn torsion spring **1** in accordance with the **requirement** using nut **2** (screw **3**).

1.05.22 Torsion spring of the differentiation regulating shaft (on machines without -918/14)

Requirement
With the presser foot raised, the stitch length set at "**0**", adjustment wheel **3** at + **4.5** and adjustment wheel **4** at "**0**", guide pin 1 must be touching in connecting link 2.

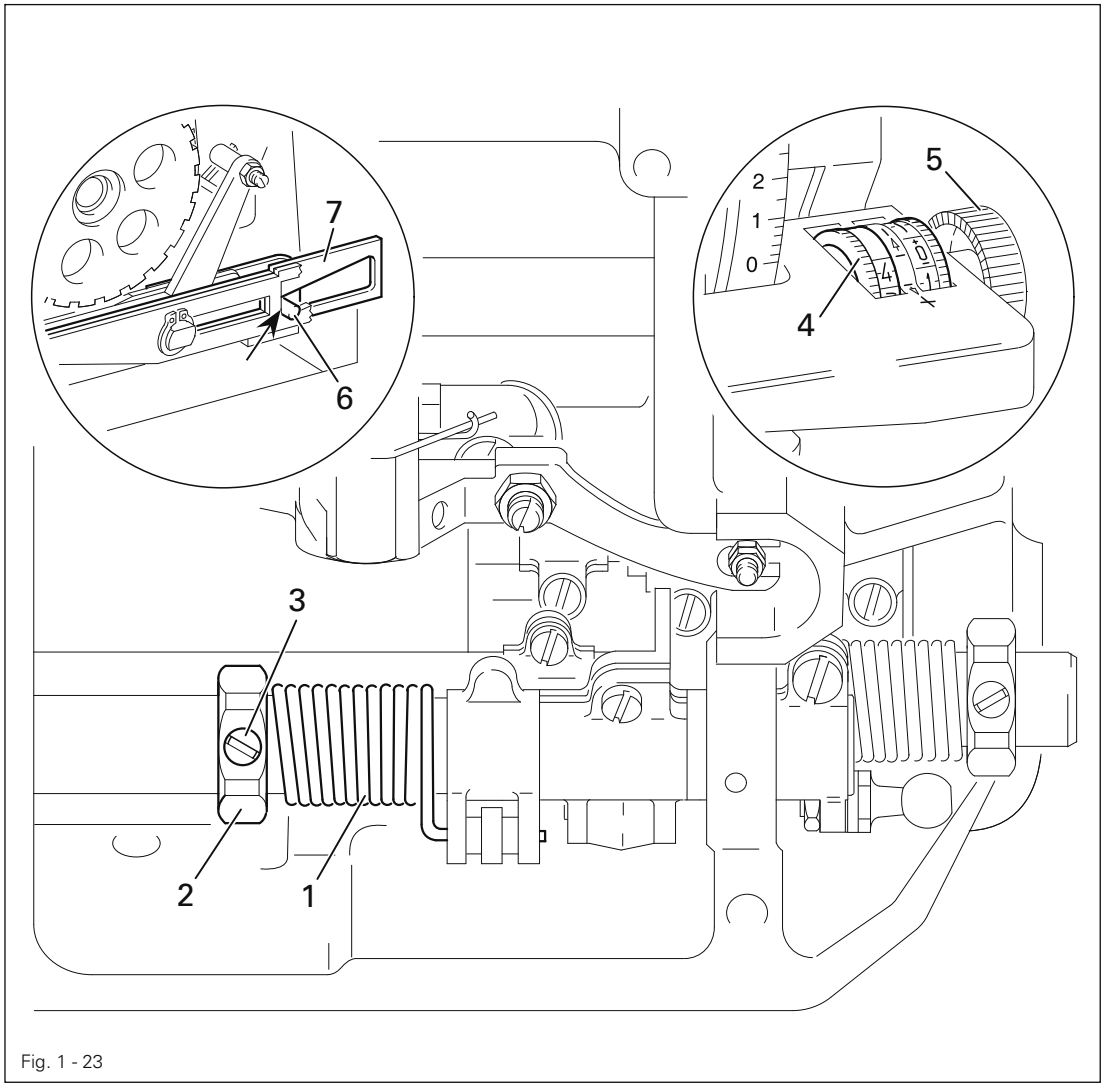

Fig. 1 - 23

- Turn torsion spring **1** in accordance with the **requirement** using nut **2** (screw **3**).

1.05.23 Torsion spring of the differentiation regulating shaft (on machines with -918/14)

Requirement
When the presser foot is raised, the maximum stitch length set, lever **4** raised to its top position and lever **5** set at "**0**", the pointer **6** should be touching lever **4.**

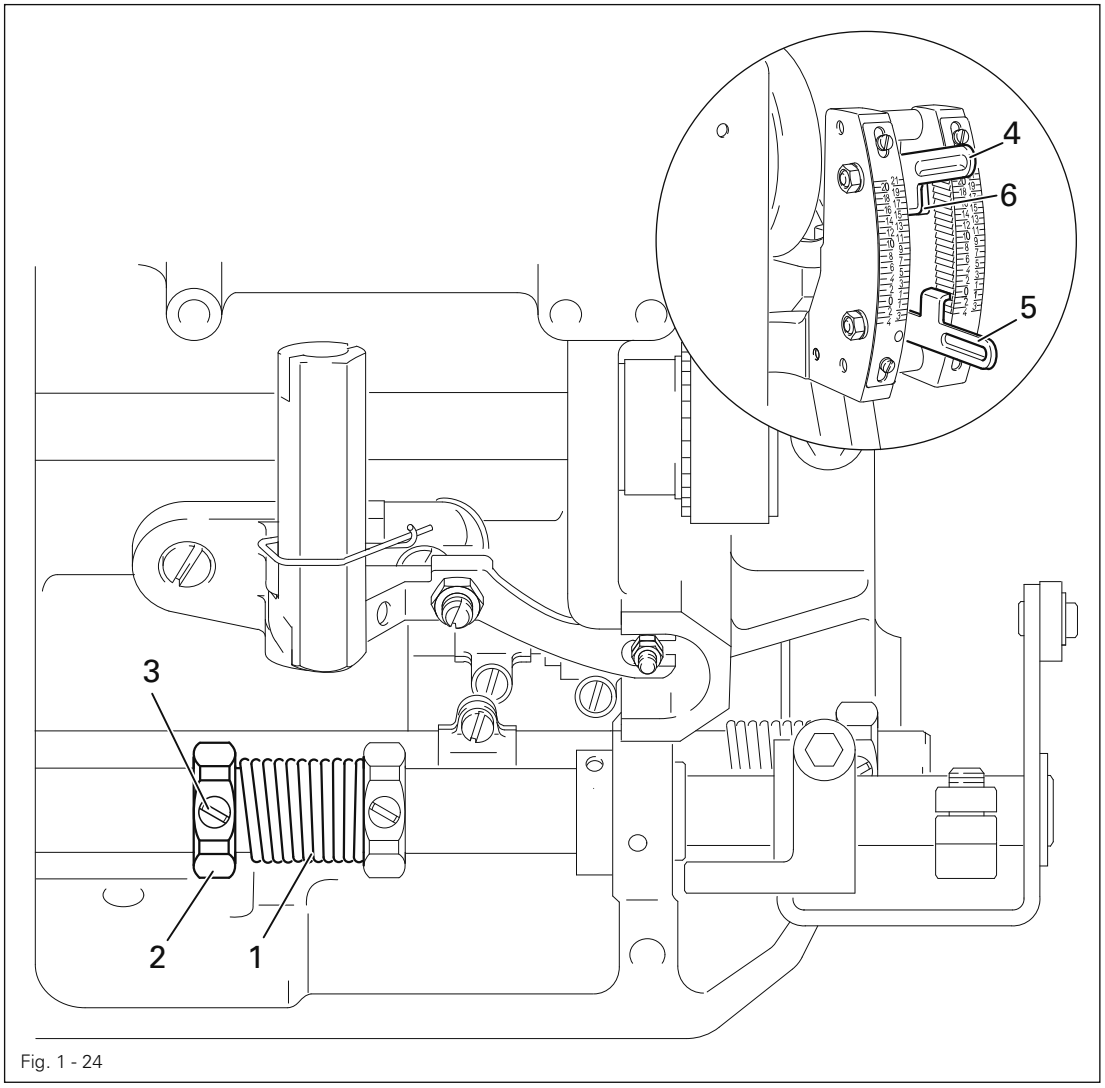

Fig. 1 - 24

- Turn torsion spring **1** in accordance with the **requirement** using nut **2** (screw **3**).

1.05.24 Feeding motion of the bottom feed dog

Requirement
With the maximum stitch length set and the needle bar position **1.0** past tdc (hole **4),** the bottom feed dog must not move when the reverse feed lever is pressed.

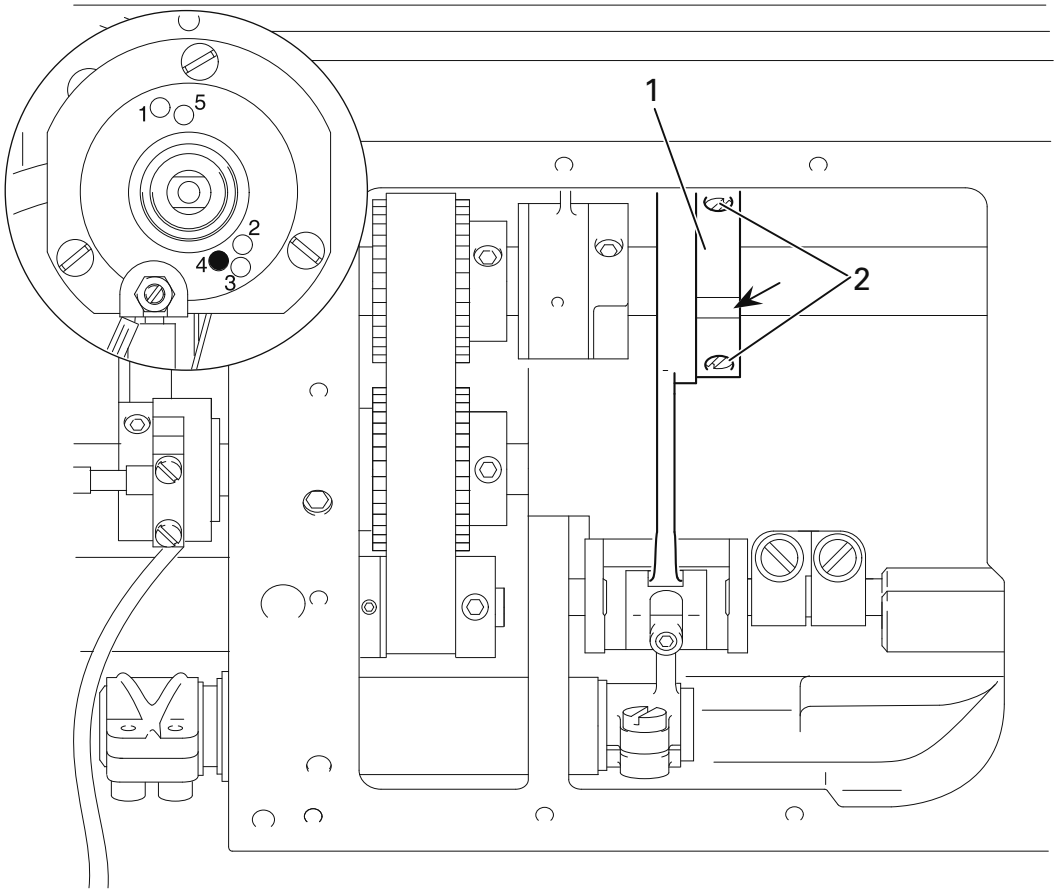

Fig. 1 - 25

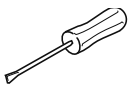

- While continuously operating the reverse feed control, adjust eccentric **1** (screws **2)** in accordance with the **requirement** (the counter-sinking in eccentric **1** must be visible).



An axial displacement of eccentric **1** is not allowed.

1.05.25 Lifting motion of the bottom feed dog

Requirement
With the stitch length set at "**0**" and the needle bar position at **0.25 mm** past tdc (hole **3)** the bottom feed dog must be at its upper point of reversal.

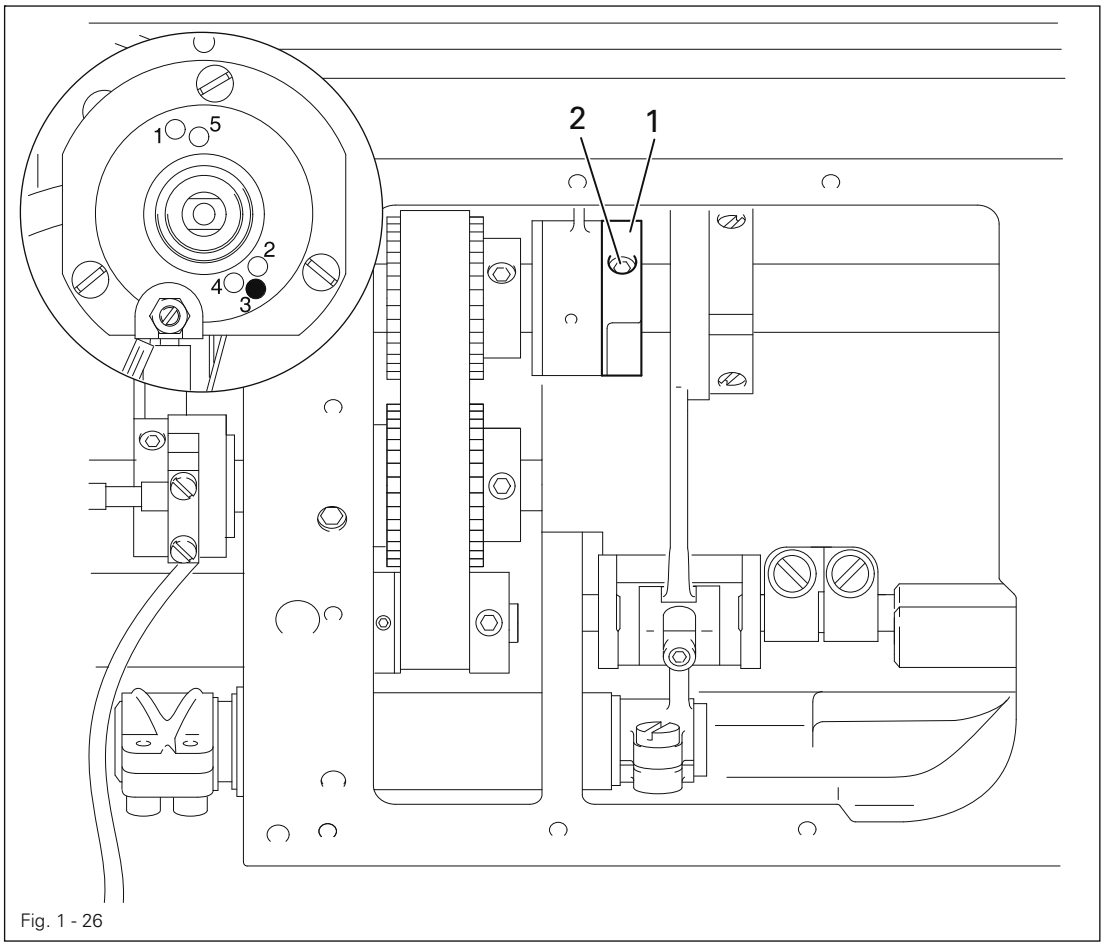

Fig. 1 - 26

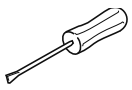

- Adjust feed lifting eccentric **1** (screw **2)** in accordance with the **requirement**.



An axial displacement of feed lifting eccentric **1** is not allowed.

1.05.26 Drive belt in the gearbox housing

Requirement
Drive belt **4** must be tightened so that the machine runs freely and the belt sprockets do not have any noticeable play.

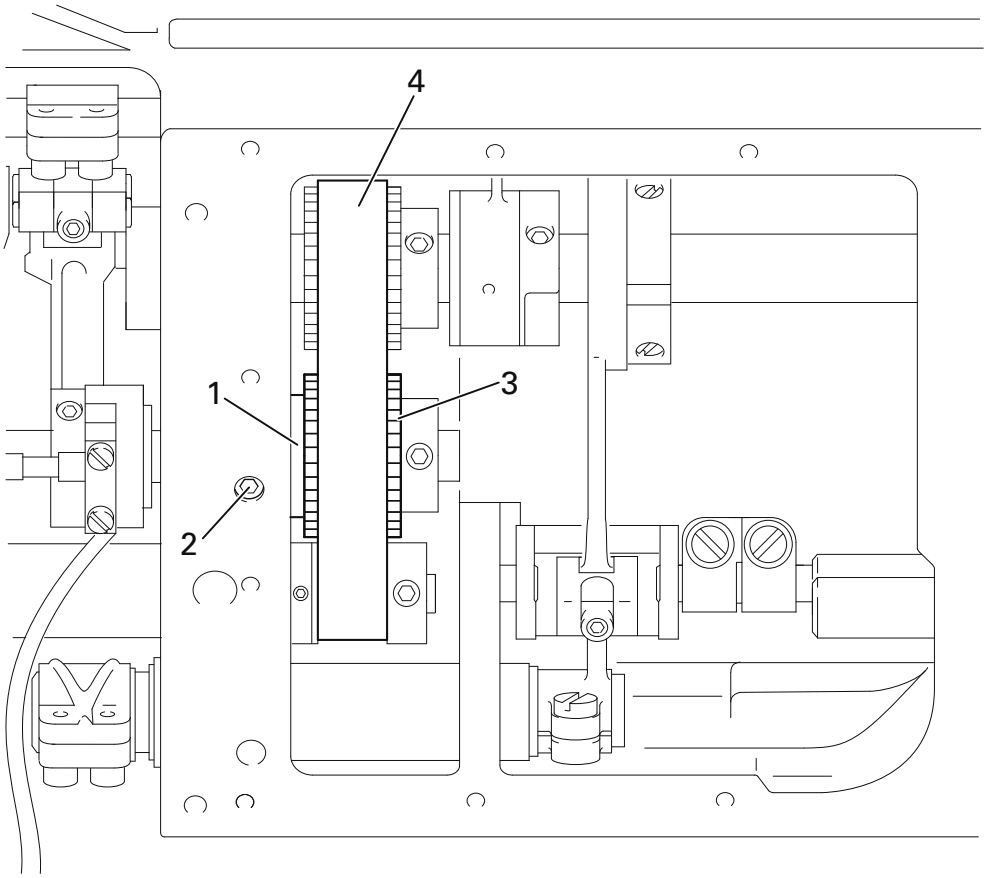

Fig. 1 - 27

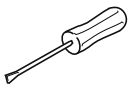

- Adjust eccentric bearing bush **1** (screw **2**) in accordance with the **requirement** and so that drive belt **4** is in the centre of bobbin opener drive wheel **3.**

1.05.27 Hook bearing bracket

Requirement
The hook shaft must be touching the hook bearing bracket adjustment gauge **1** at the top and the side.

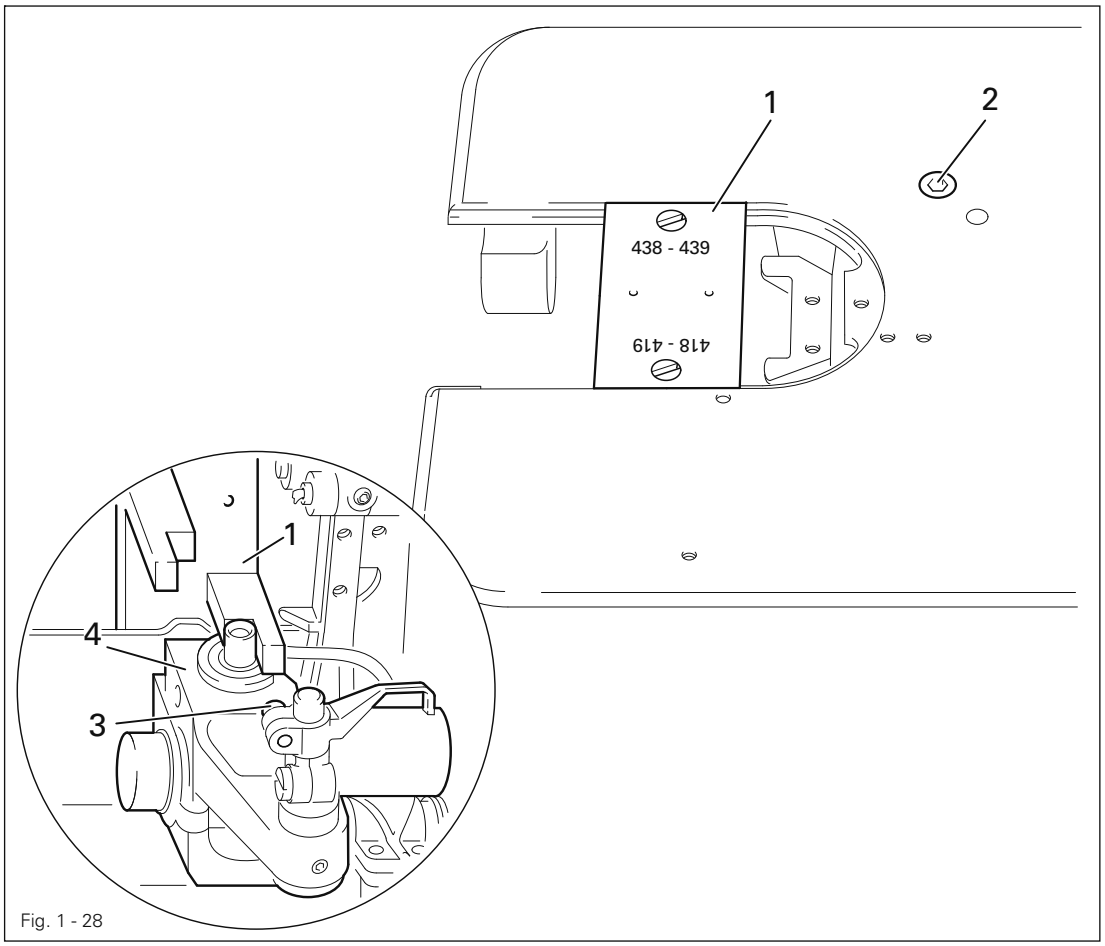

Fig. 1 - 28

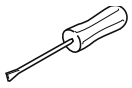

- Loosen screw **3.**
- Swing the bobbin case opener to the right and remove the hook.
- Loosen screw **2** and loosen the draw key underneath it by lightly tapping the head of the screw.
- Screw on the hook bearing bracket adjustment gauge.
- It must be possible to read the numbers "**438-439**" from the front.
- Move or turn hook bearing bracket **4** in accordance with the **requirement**.
- Tighten screw **2.**
- Adjust the bobbin case opener in accordance with subsection **1.05.32 Bobbin case opener position**.

1.05.28 Hook lubrication

Requirement
When the machine is running at full speed, after about **10** seconds a fine oil streak should be visible on a strip of paper held over the needle plate cutout.

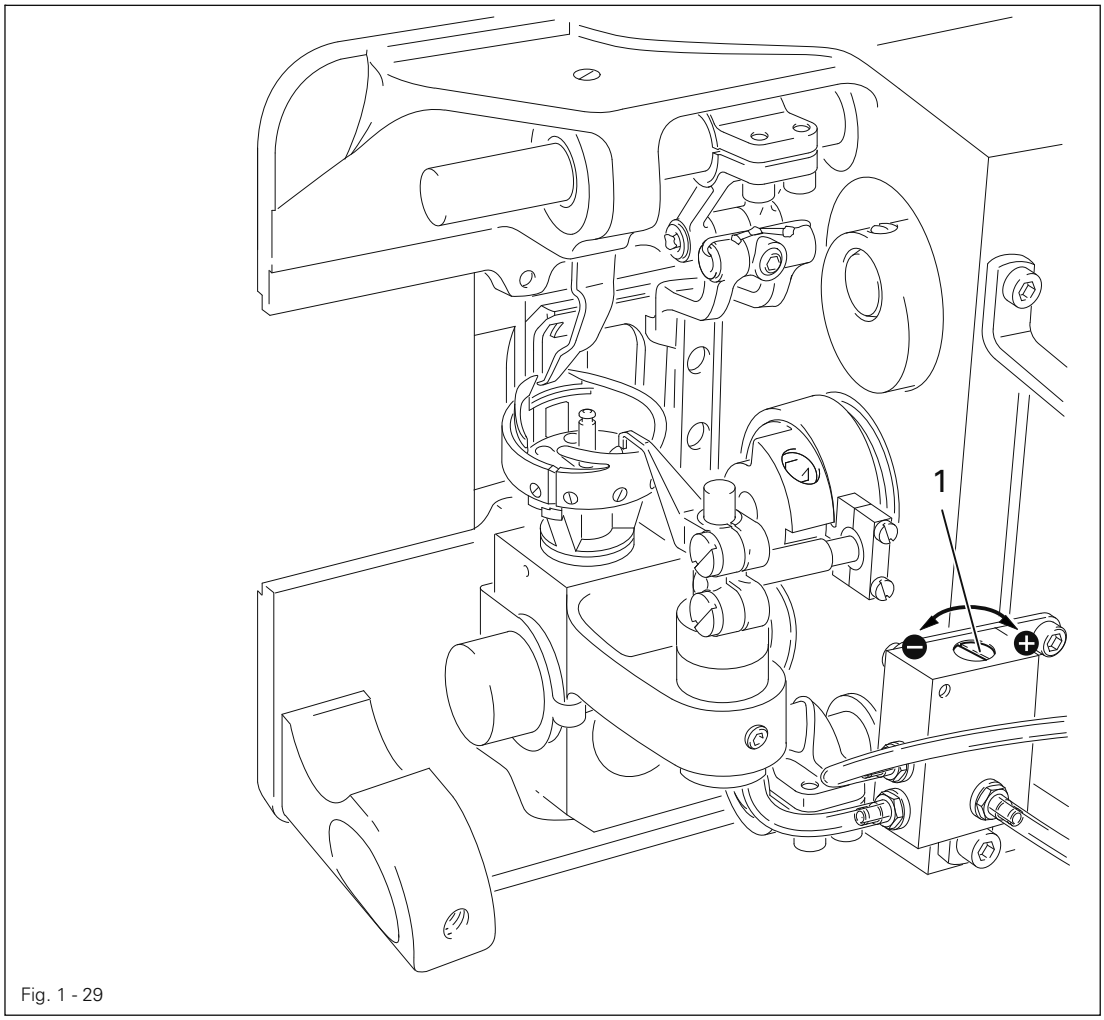

Fig. 1 - 29

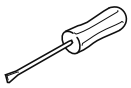

- Adjust screw **1** in accordance with the **requirement**.

1.05.29 Pre-adjusting the needle height

Requirement
With the needle bar at tdc (hole **2)** the distance between the point of the needle and the needle plate must be **19 mm**.

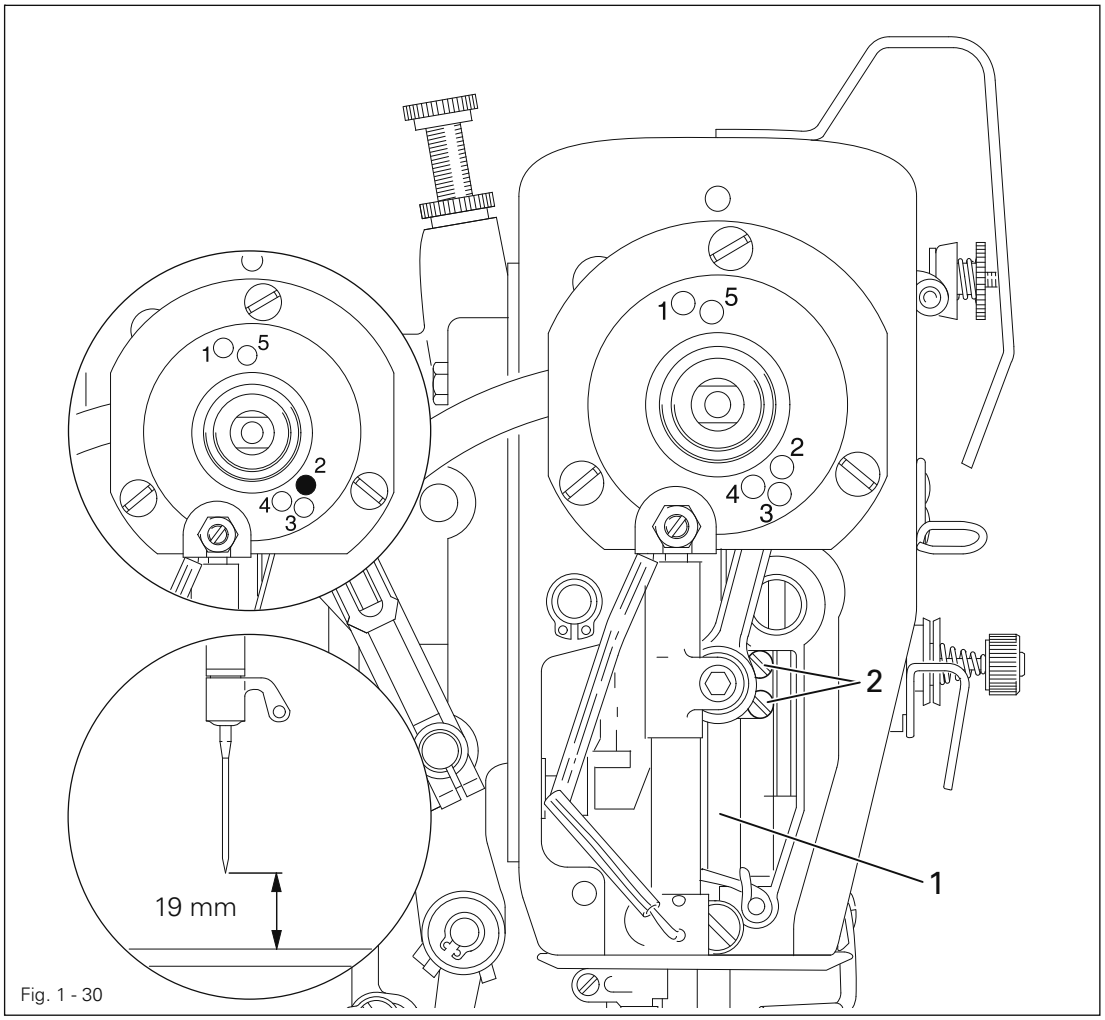

Fig. 1 - 30

- Without turning it, adjust the needle bar (screws **1)** in accordance with the **requirement**.

1.05.30 Needle rise, hook-to-needle clearance and bobbin case positioning-finger

Requirement

1. With the needle position set at "**middle**", the zigzag stitch setting at "**0**" and the needle bar position **2.0** past bdc (hole **1)** the hook point must be in the middle of the needle and the distance between the needle and the hook point must be **0.05** - **0.1 mm**.
2. The bobbin case positioning-finger **3** must be fitted so that there is a clearance of **0.5 mm** between the bottom section of the bobbin case and the front edge of the bobbin case positioning-finger (see arrow).

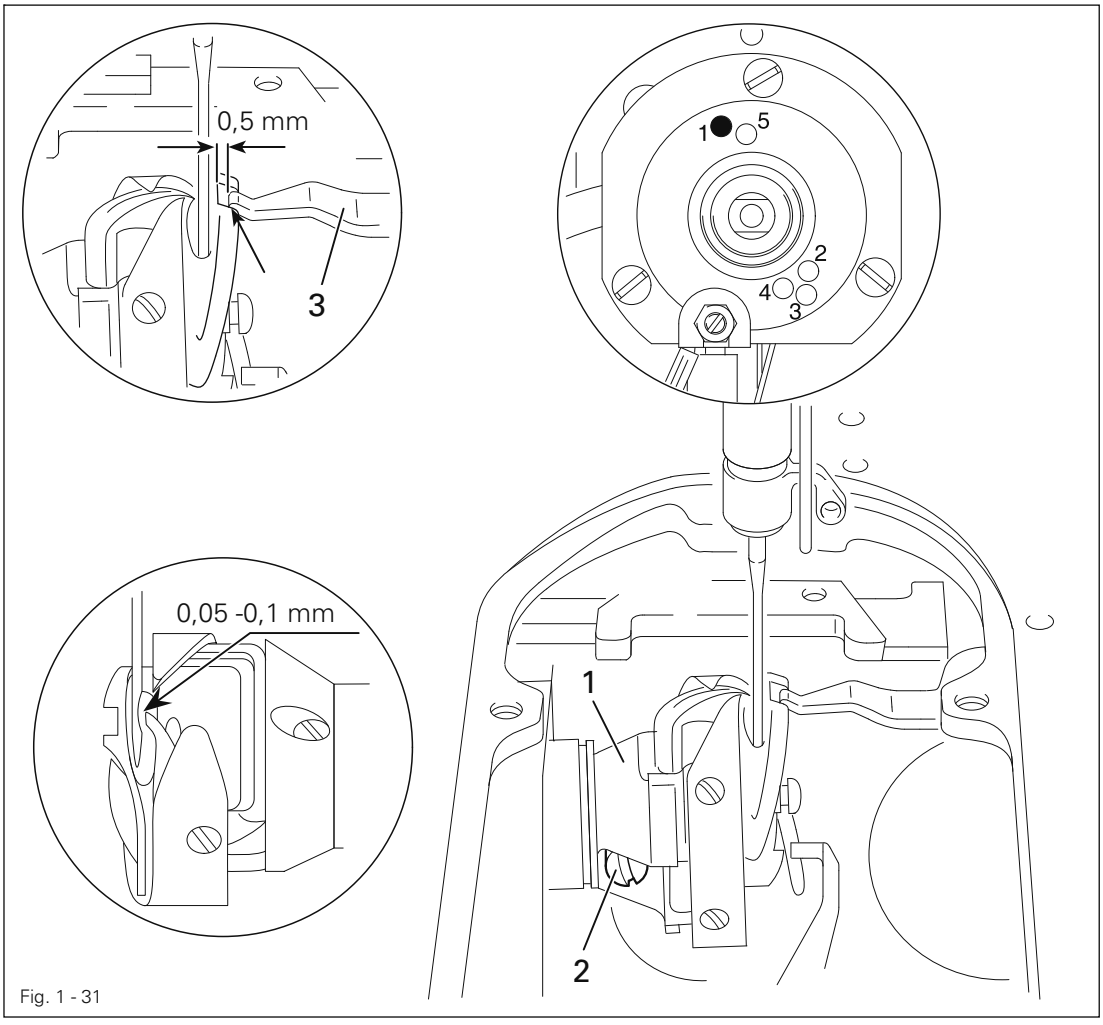

Fig. 1 - 31

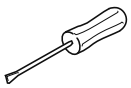

- Adjust the hook **1** (screw **2)** in accordance with **requirement 1.**
- Fit the bobbin case positioning-finger **3** in accordance with **requirement 2.**

1.05.31 Final adjustment of the needle height

Requirement
With the zigzag stitch set at "**0**", the needle position set at "**left**" and the hook point in the middle of the needle, the top edge of the needle eye must be **0.5 mm** underneath the hook point.

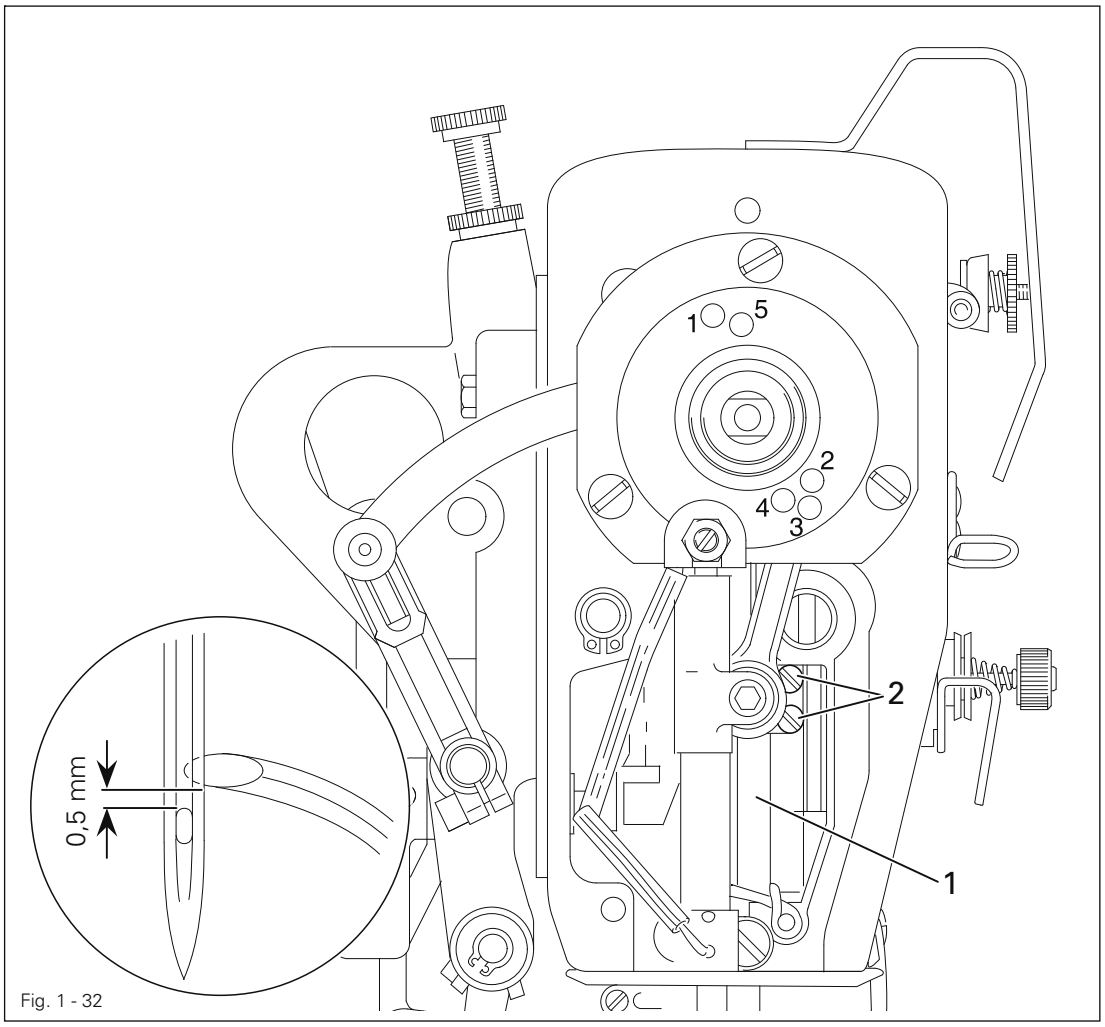

Fig. 1 - 32

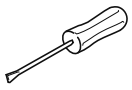

- Without turning it, adjust the needle bar **1** (screws **1**) in accordance with the **requirement**.

1.05.32 Bobbin case opener position

Requirement

1. There must be a clearance of **0.5 mm** between the top edge of the bobbin case opener and the inner edge of the bottom section of the bobbin case.
2. Between the bobbin case opener finger and the bottom section of the bobbin case opener there must be a clearance of **0.8 mm**.
3. At the left point of reversal of the bobbin case opener the bobbin case positioning-finger must be approx. **0.3 mm** from the right side of the groove in the bottom section of the bobbin case.

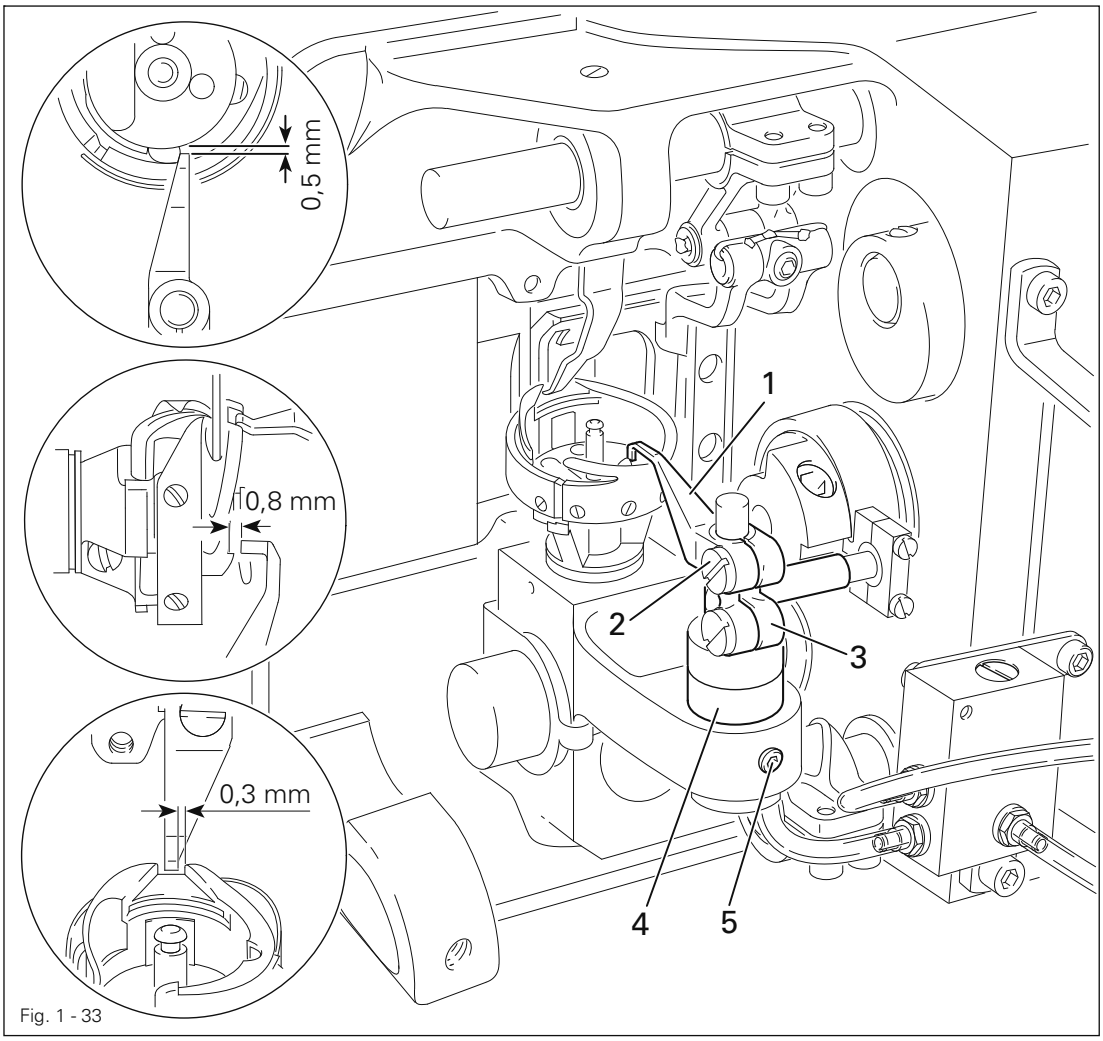

Fig. 1 - 33

- Loosen screw **2.**
- Place bobbin opener **1** on the right side of the bobbin case base, press it against clamp crank **3** located underneath this and slightly tighten screw **2.**
- Adjust eccentric bearing bush **4** (screw **5)** in accordance with **requirement**s **1** and **2.**
- Adjust bobbin opener **1** in accordance with **requirement 3** and tighten screw **2,** taking care to see that bobbin opener **1** is touching clamp crank **3**

1.05.33 Bobbin case opener motion

Requirement
With the needle bar **2.0** past bdc (hole **1)** the bobbin case opener **3** must be at its right point of reversal.

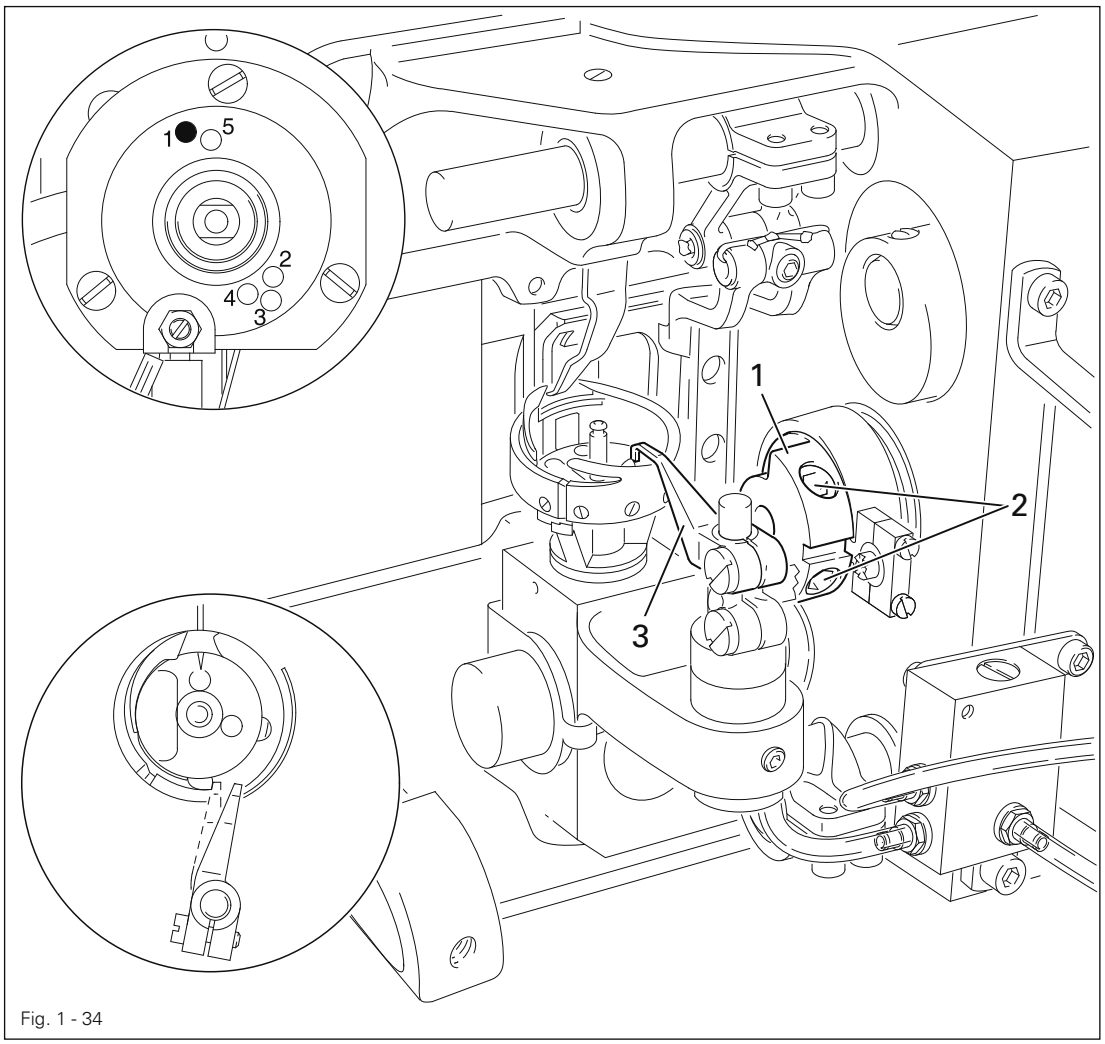

Fig. 1 - 34

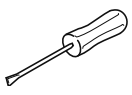

- Adjust bobbin opener eccentric **1** (screws **2)** in accordance with the **requirement**.

1.05.34 Bottom feed dog height

Requirement
With the stitch length set at "**0**" and the needle bar position at **0.25** past tdc (hole **3)** the bottom feed dog must be in the middle of the needle plate cutout and be touching the feed dog height-adjustment gauge along its entire length.

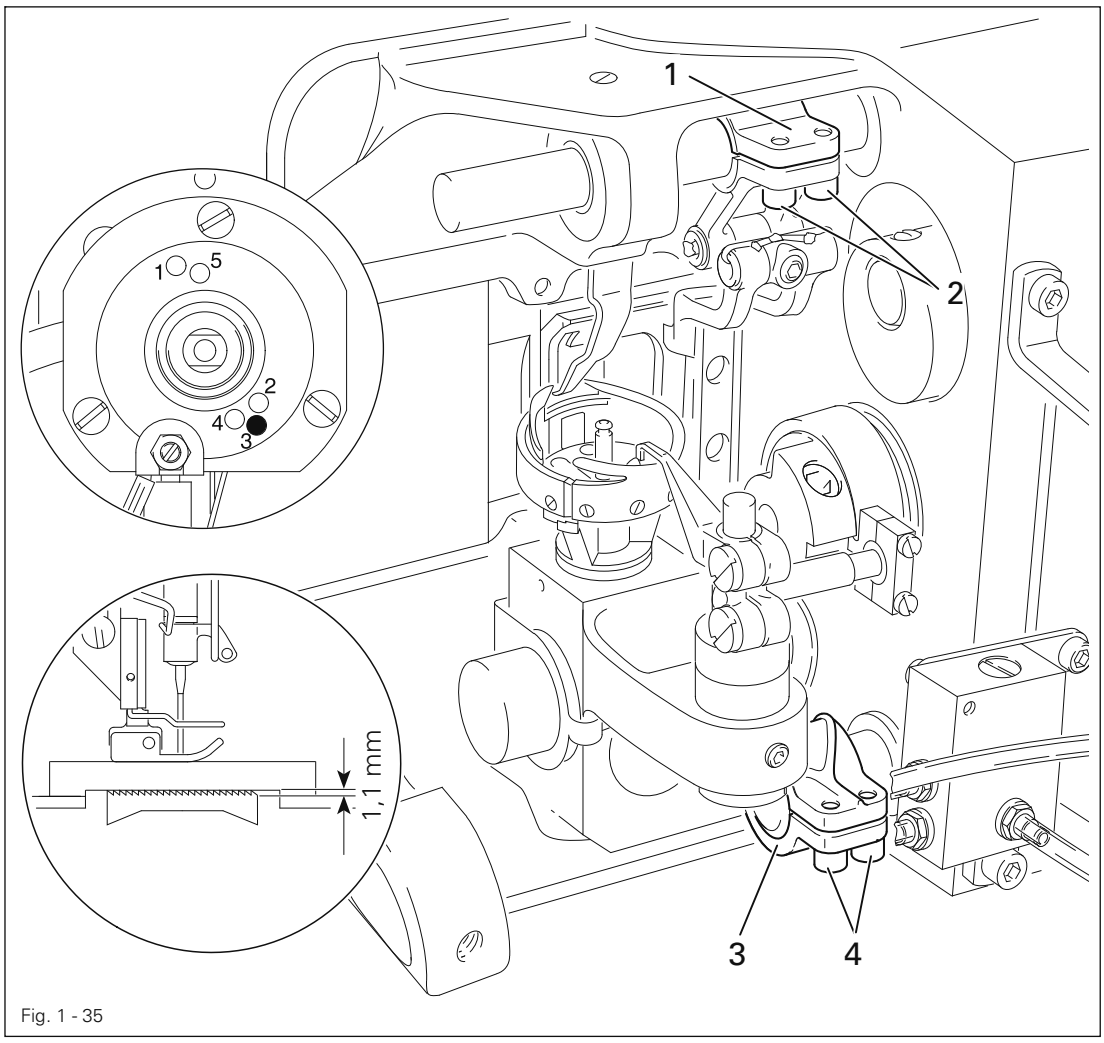

Fig. 1 - 35

- Position the feed dog adjustment gauge underneath the presser foot with the cutout facing downwards.
- Lower the presser foot onto it.
- Press the feed dog carrier up and position the feed dog in the middle of the needle plate cutout.
- Adjust lifting crank **1** (screws **2)** and clamp bushing **3** (screws **4)** in accordance with the **requirement**.

1.05.35 Clearance between presser foot and needle plate

Requirement
With the hand lever raised the needle must enter exactly in the middle of the needle hole in the presser foot and the clearance between the needle plate and the presser foot must be 7 mm.

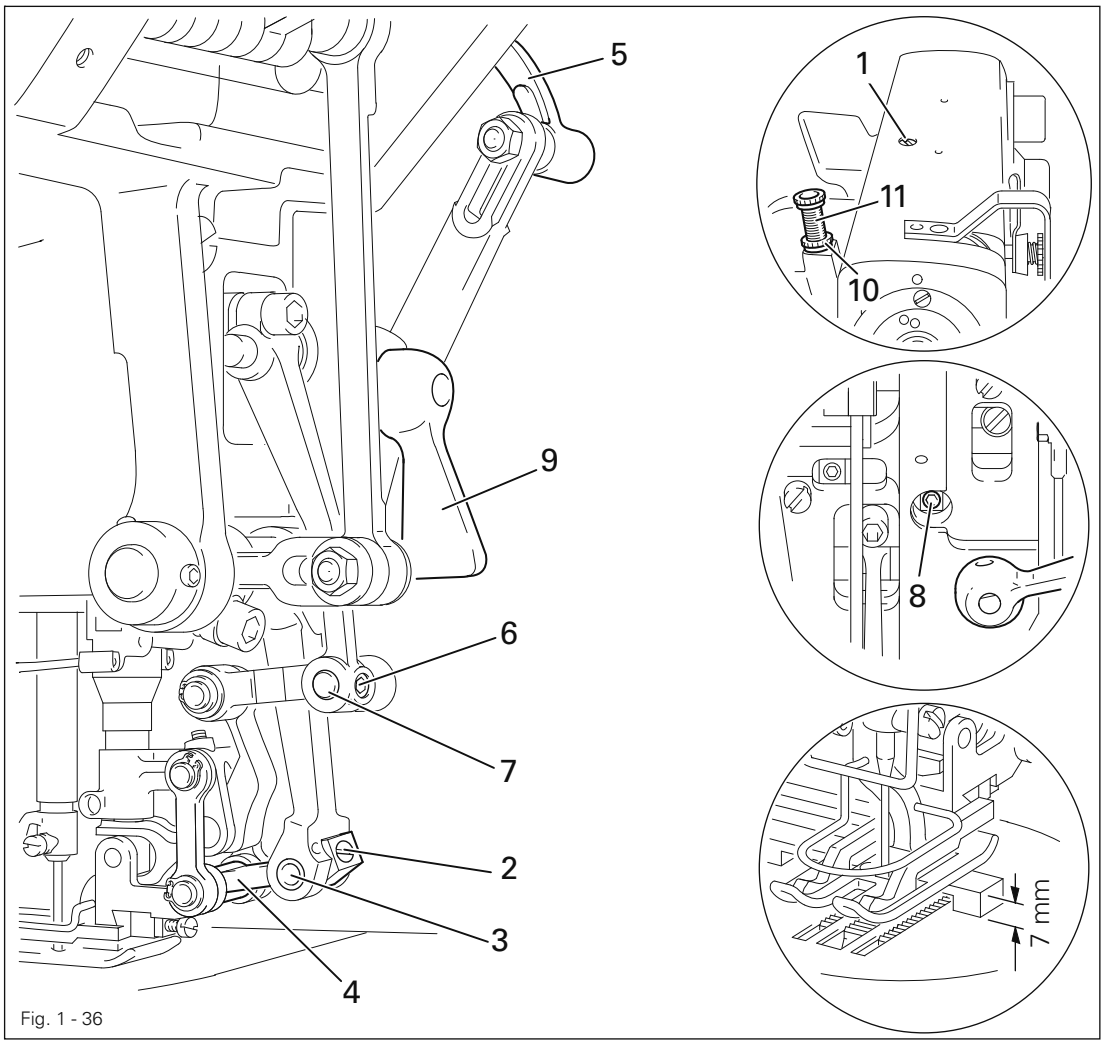

Fig. 1 - 36

- Set the zigzag stitch lever at "0" and the needle position adjustment lever at "middle".
- Allow the presser foot to rest on the needle plate. Loosen nut 10 and reduce the presser on the presser foot bar by turning screws 1 and 11.
- Tighten nut 10.
- Loosen screw 2. Push out pin 3 and pivot connecting joint 4 out of the fork of the feed lever.
- Bring lever 5 to its outer point of reversal.
- Place the feed dog adjustment gauge underneath the presser foot with its notch facing downwards.
- Loosen screw 6 and press out eccentric pin 7.
- Loosen screw 8 and raise hand lever 9.
- Press the presser foot lifting finger downwards and tighten screw 8.

For the following adjustments, screws **2** and **6** remain loosened and bearing bolt **3,** connecting link **4** and eccentric pin 7 are not refitted.

1.05.36 Vibrating presser feed and connecting lever

Requirement

1. All moving parts of the vibrating presser must function freely and without play.
2. The vibrating presser must not touch the presser foot.

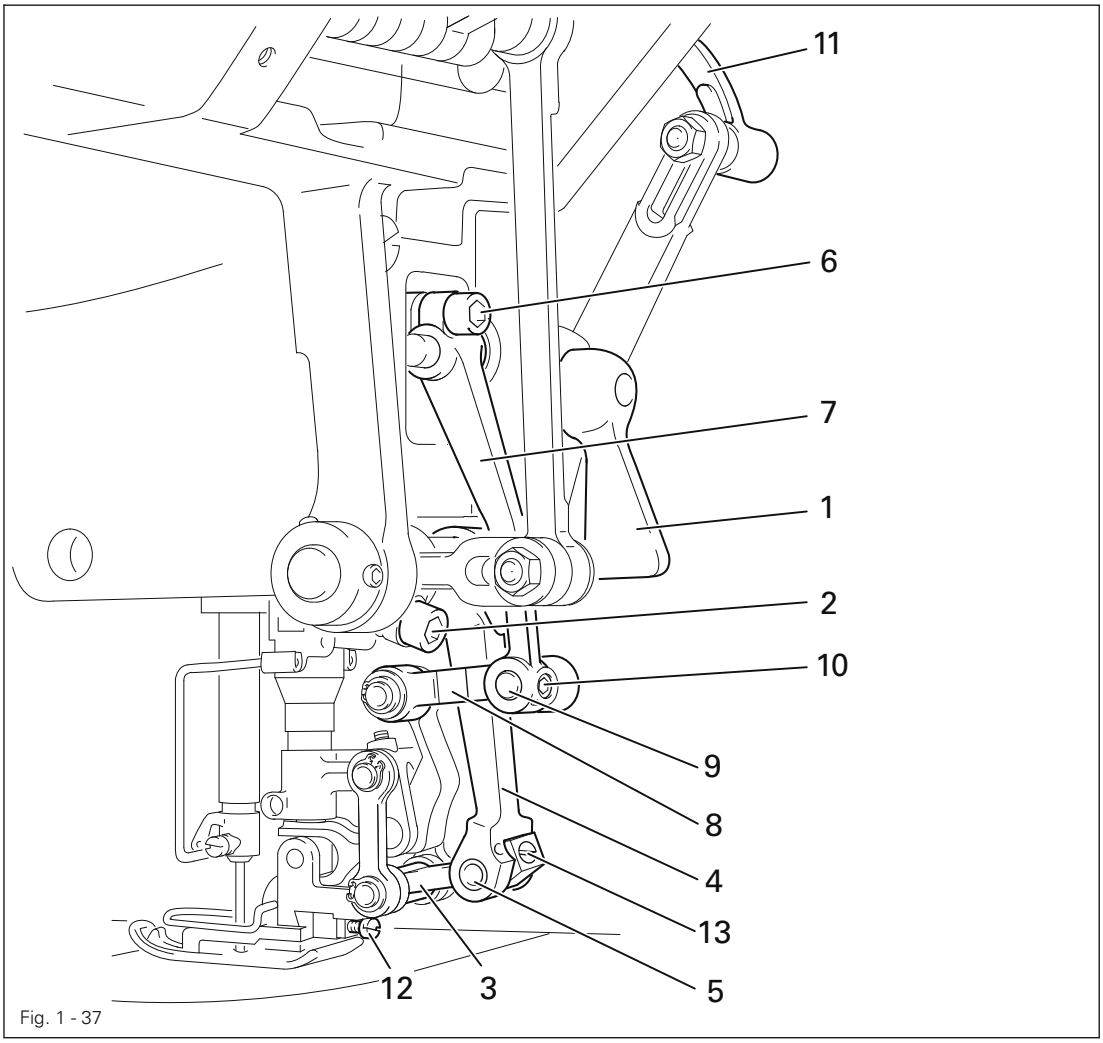

Fig. 1 - 37

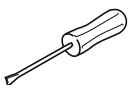

- Lower the presser foot using hand lever **1**.
- Loosen screw **2**.
- Swing connecting link **3** into the fork of lever **4** and insert bolt **5.**
- Ensure that the machine runs freely. Adjust lever **4** if necessary.
- Tighten screw **13.**
- Set the stitch length at "**0**".
- Align the vibrating presser foot in the middle of the presser foot cutout as viewed in the direction of sewing and tighten screw **2.**
- Loosen screw **6.**
- Align the hole in lever **7** with the elongated hole of lever 8 without lateral play. If necessary move/adjust lever **7.**
- Insert pin **9** with its largest eccentricity facing downwards into the elongated hole of

- lever **8** and into the hole in lever **7**.
- Tighten screw **10**.
- Bring lever **11** to its outer point of reversal.
- Press lever **7** in the direction of feed until you feel it stop and then tighten screw **6**.
- Loosen screw **12** and align the vibrating presser foot in accordance with **requirement 2**.
- Tighten screw **12**.

1.05.37 Vibrating presser stroke

Requirement
With the stitch length set at "0", the presser foot resting on the needle plate and the vibrating presser foot at its upper point of reversal, there must one of the following clearances between the needle plate and the vibrating presser foot, depending on the model of the vibrating presser foot.

1.3 **mm** on pulling-type vibrating pressers.
2.0 **mm** on pushing-type vibrating pressers behind.

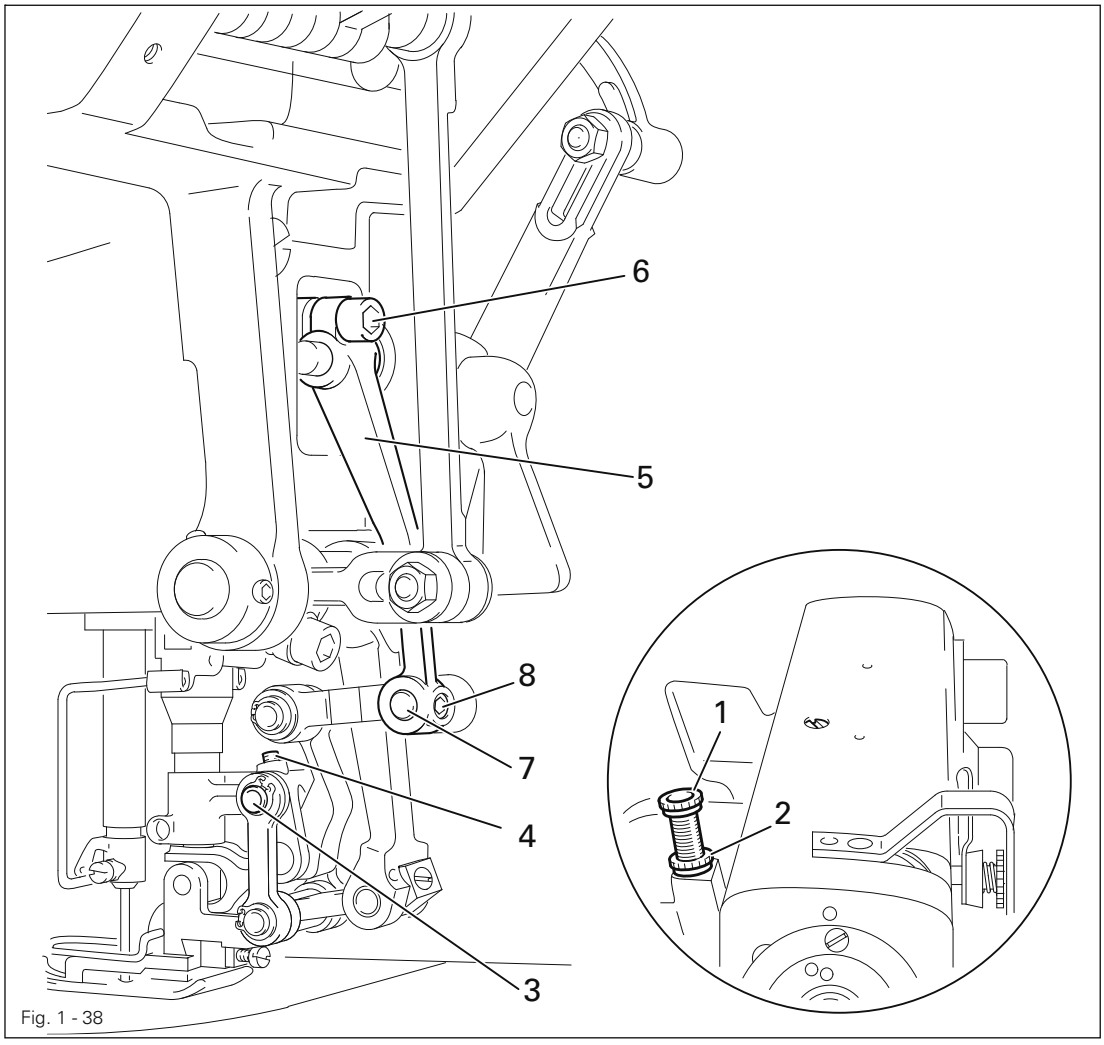

Fig. 1 - 38

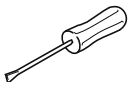

- Loosen nut **2** and increase the pressure on the presser foot a little with screw **1.**
- Allow the presser foot to rest on the needle plate.
- Loosen screw **4,** move the eccentricity of bolt **3** towards the needle bar and tighten screw **4.**
- Turn the balance wheel until lever **5** is at its rear point of reversal.
- Loosen screw **6** and press lever **5** to the rear.
- Slide a gauge conforming with the **requirement** between the vibrating presser foot and the needle plate and tighten screw **6.**
- Loosen screw **8** and turn eccentric pin **7** for the final adjustment.
- Tighten nut **2** and screw **8.**

1.05.38 Vibrating presser lifting motion

Requirement
The vibrating presser must be touching the bottom feed dog when the rising bottom feed dog has reached the top edge of the needle plate with the stitch length set at "2".

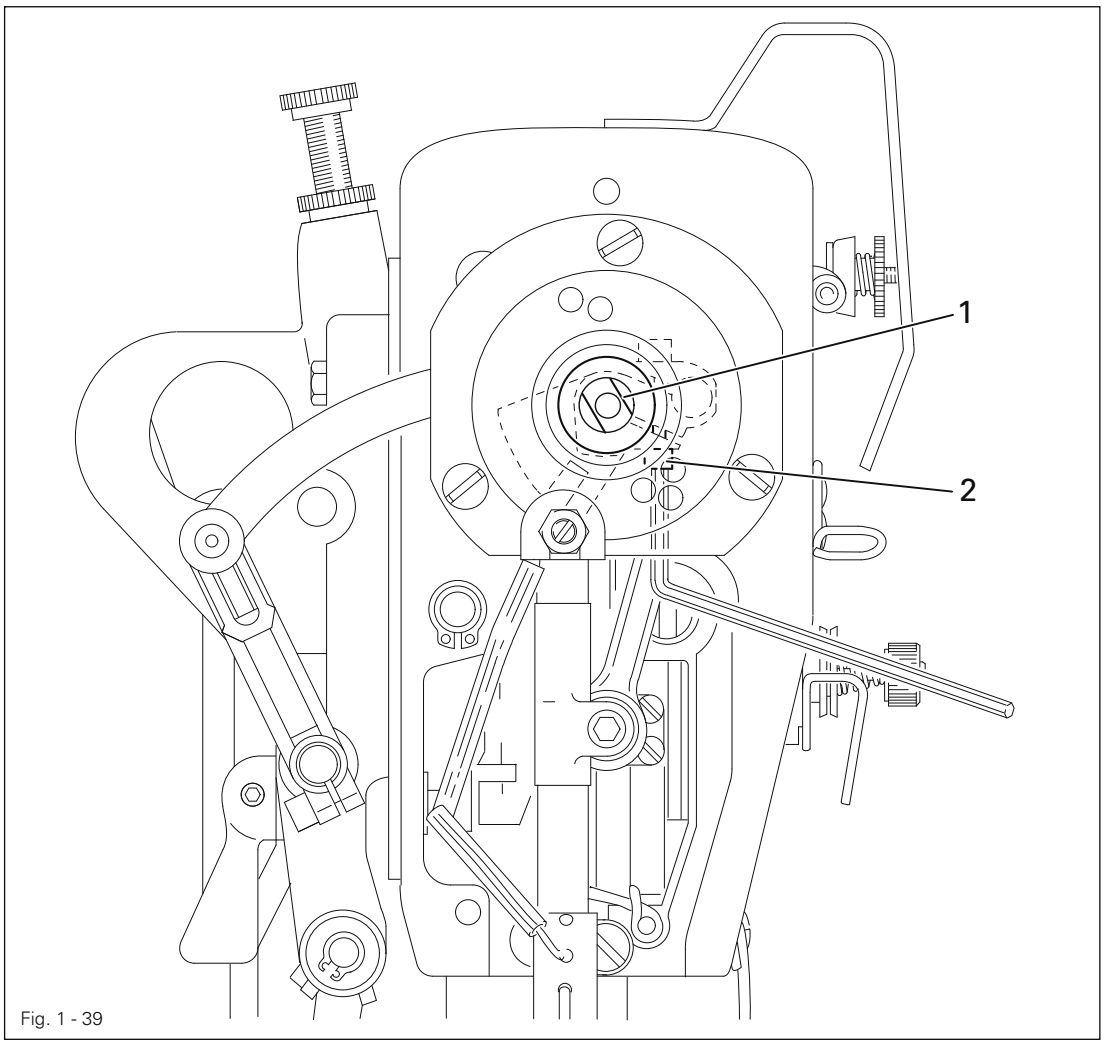

Fig. 1 - 39

- Turn eccentric bolt **1** (screw **2**) in accordance with the **requirement**.

1.05.39 Vibrating presser feeding motion

Requirement
At the maximum stitch length and with the needle bar at **1.0** past tdc (hole **4),** the vibrating presser must not move when the reverse feed key is moved up and down.

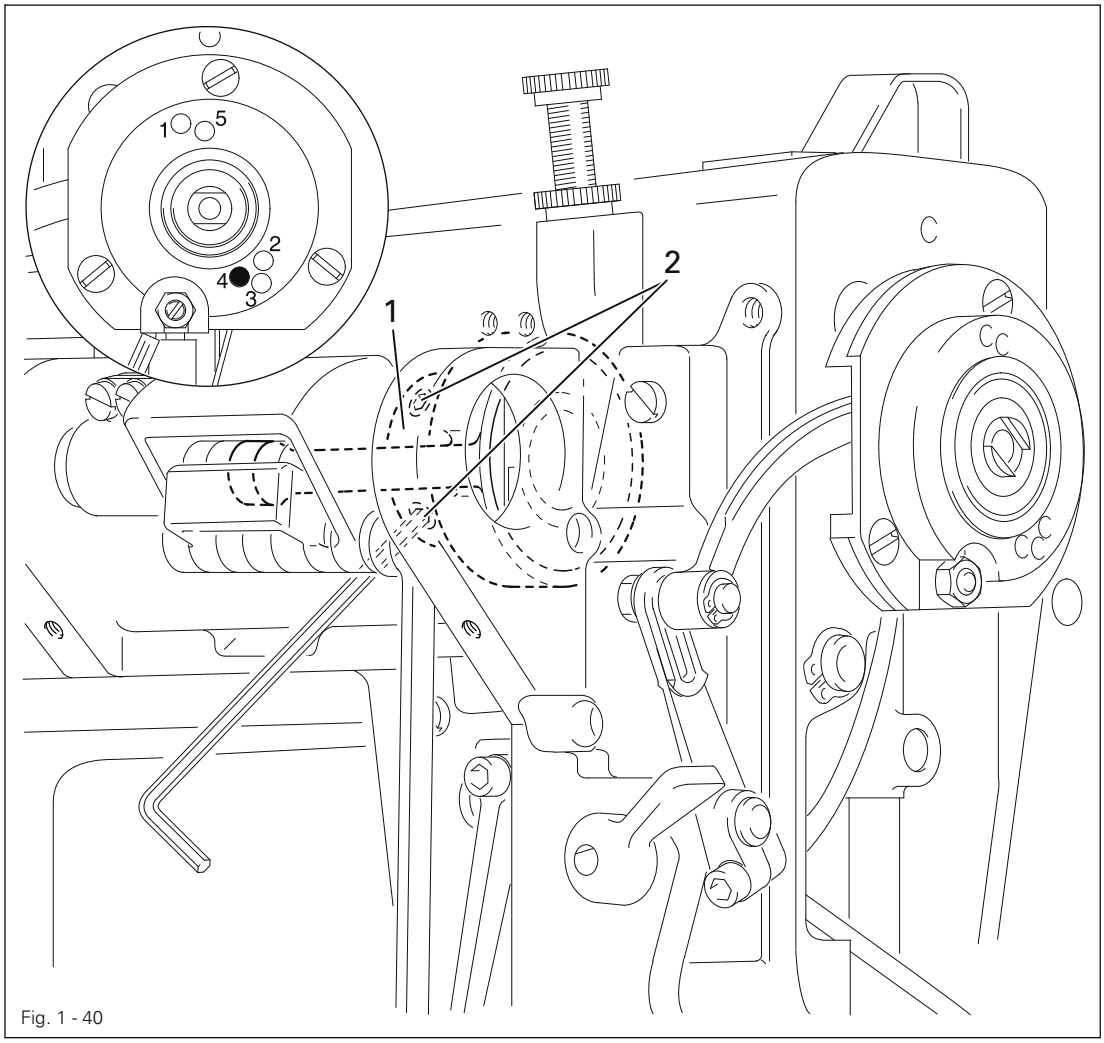

Fig. 1 - 40

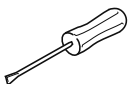

- Raise the presser foot.
- Turn feed eccentric **1** (screws **2**) until the second screw in the direction of rotation as seen from the rear is visible.
- Turn the feed eccentric in accordance with the **requirement**.

1.05.40 Feeding motion difference

Requirement
With both top feed adjustment wheels at "**0**" and the largest stitch length set, the feeding strokes of the vibrating presser and the bottom feed dog must be the same length.

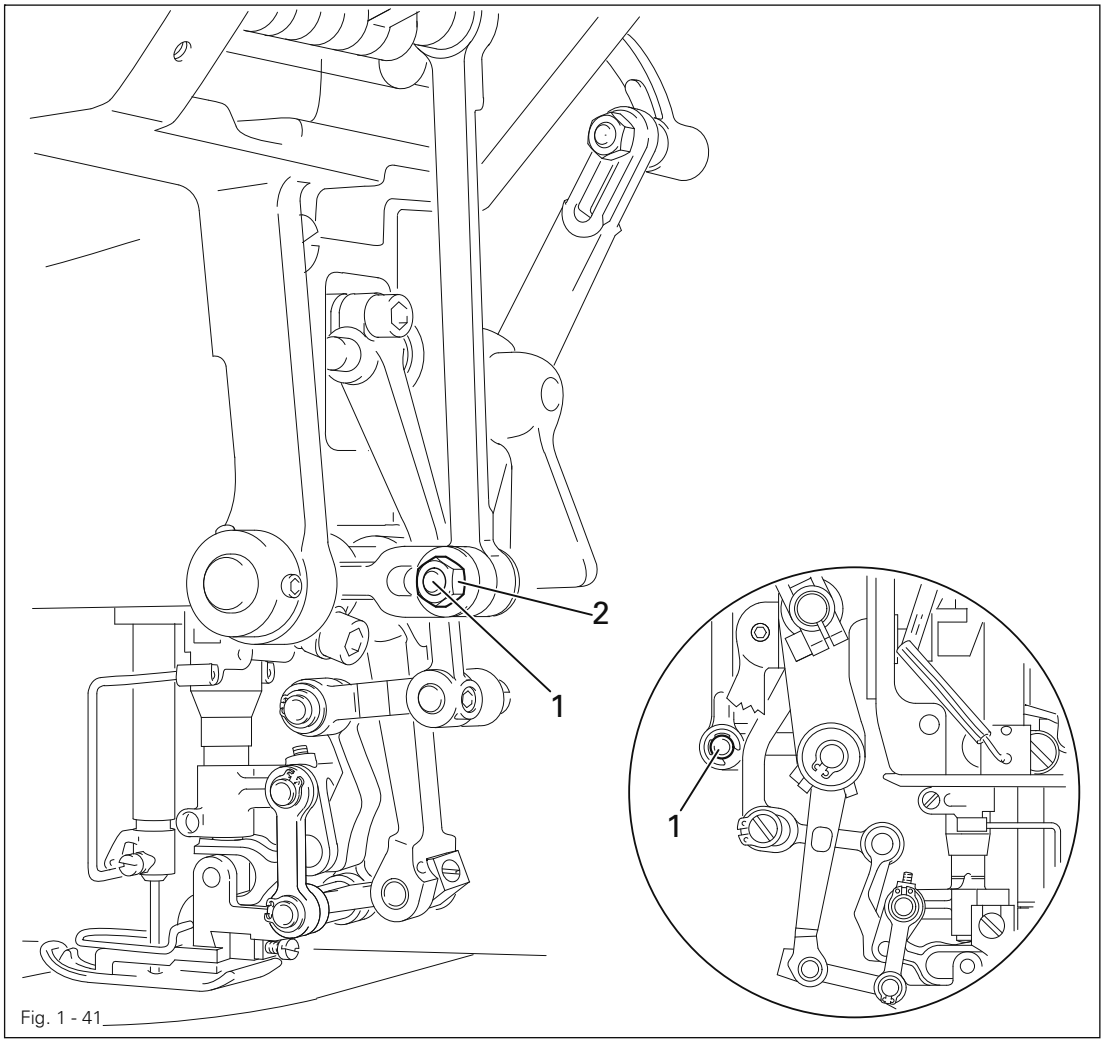

Fig. 1 - 41

- Move bolt **1** (nut **2**) in the elongated hole in accordance with the **requirement**.

1.05.41 Vibrating presser and presser foot pressure

Requirement
The material must be fed reliably even at top sewing speed. There must be no pressure marks on the material.

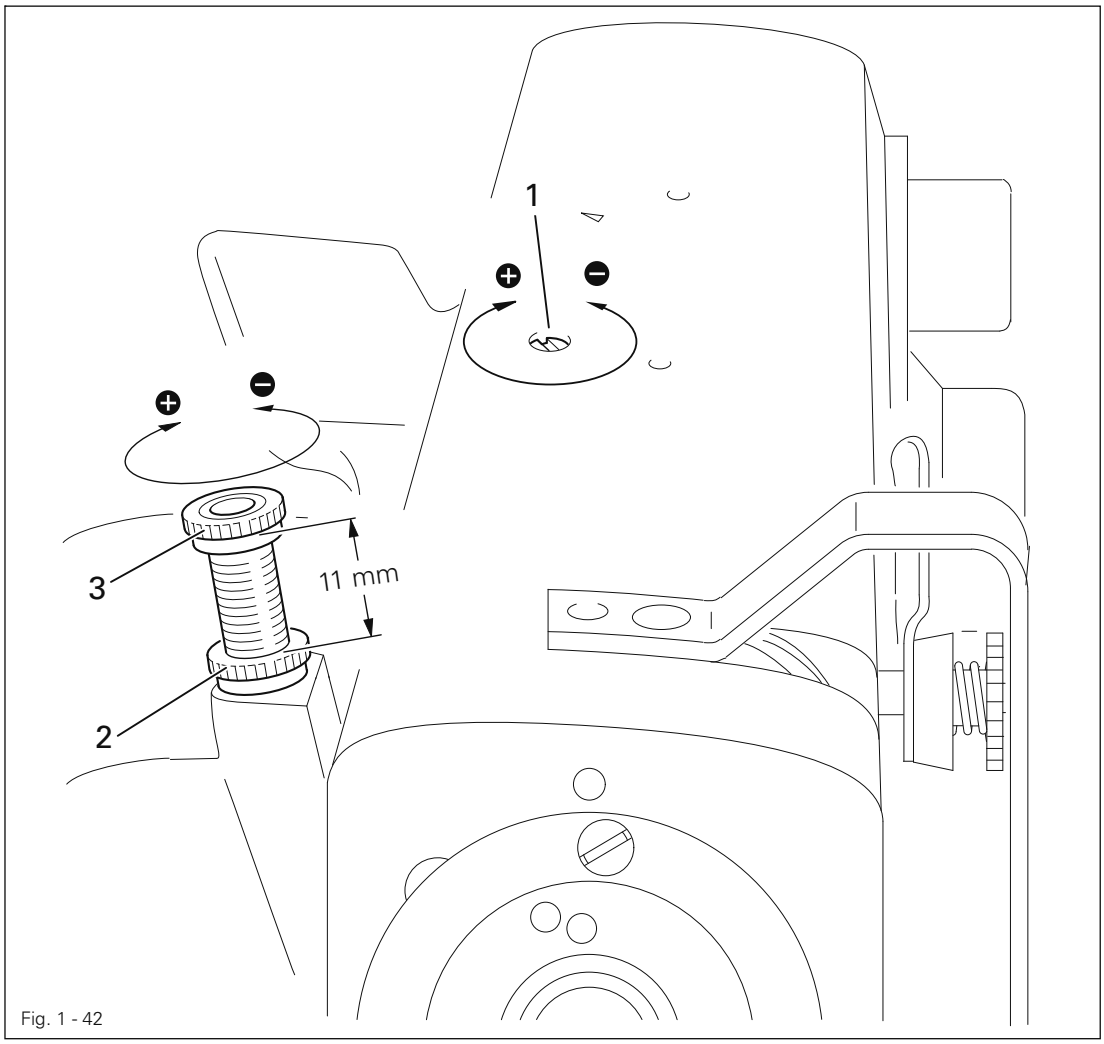

Fig. 1 - 42

- The top edge of screw **1** must be approx. **13 mm** underneath the top edge of the housing.
- Loosen nut **2.**
- Turn screw **3** until there is a clearance of approx. **12 mm** between its collar and the machine housing.

The pressure on the vibrating presser (screw **1)** and the presser foot (screw **1)** can be increased (⊕) or decreased (⊖) as required.

1.05.42 Thread diverter pin

Requirement
With the needle bar at bdc the top edge of the thread guide hole must be at the same height as the bottom edge of the thread diverter.

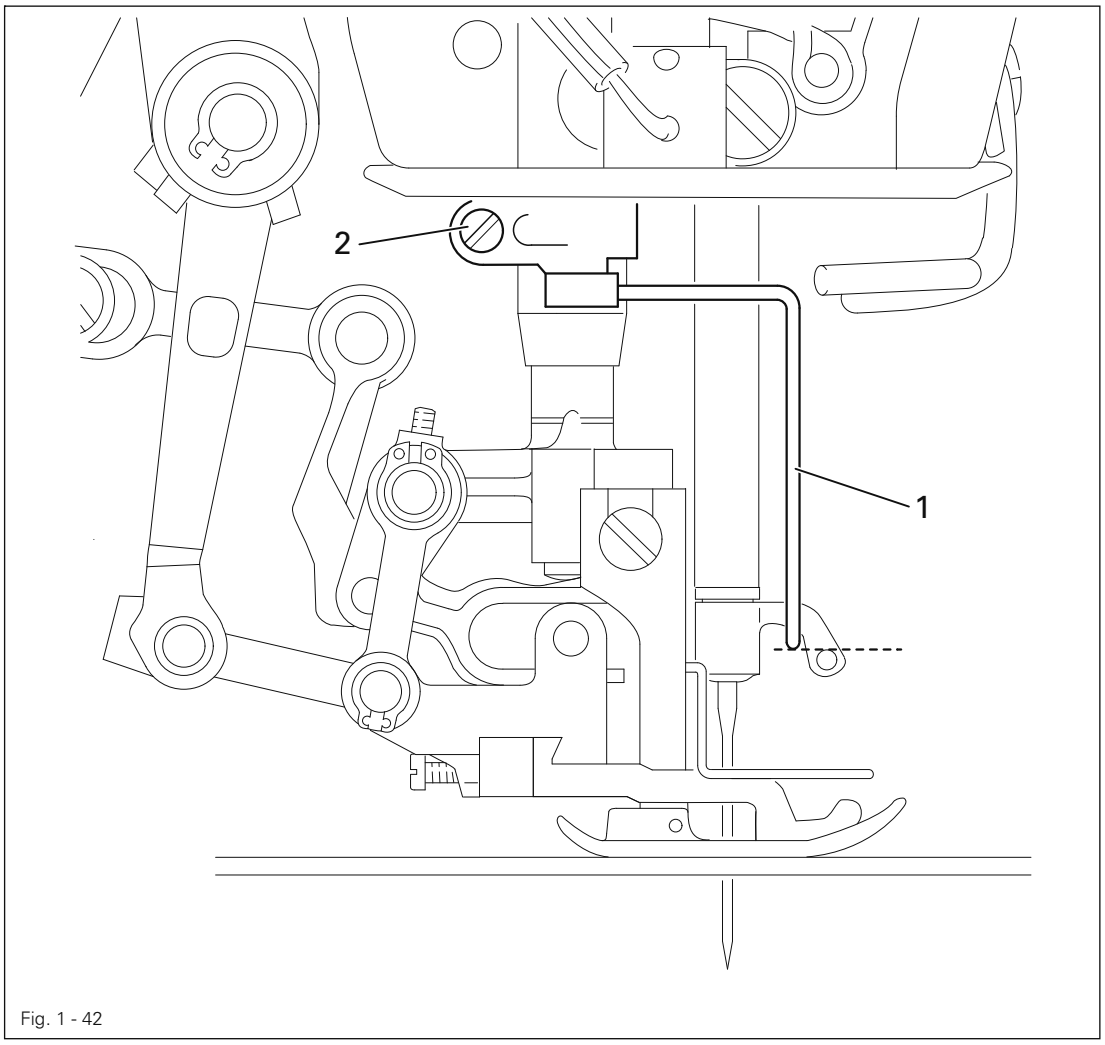

Fig. 1 - 42

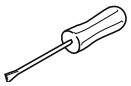

- Move thread diverter **1** (screw **2)** in accordance with the **requirement**, ensuring that it remains parallel to the base plate.

1.05.43 Limiting the knee lever stroke

Requirement
When the knee lever is pressed the hand lever must drop automatically and the presser foot must be just over **7 mm** above the needle plate.

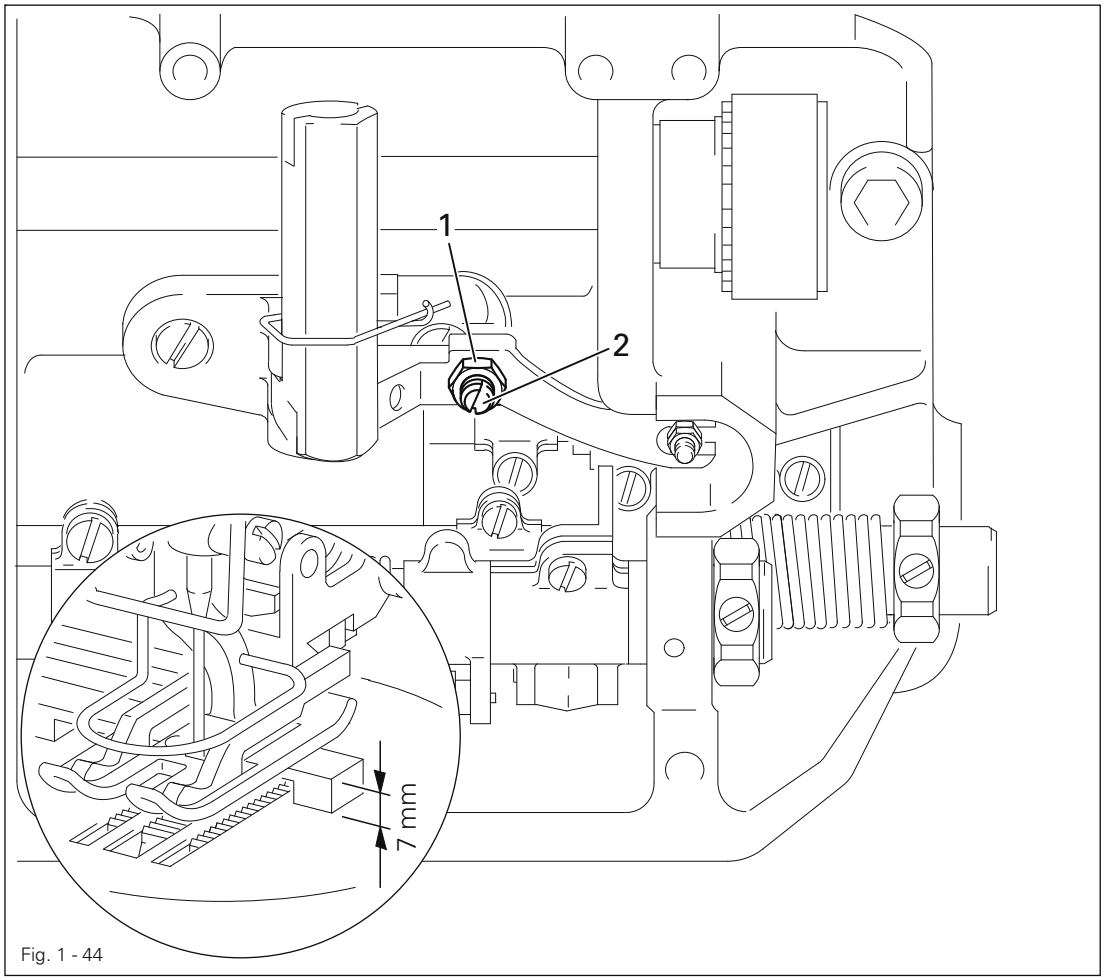

Fig. 1 - 44

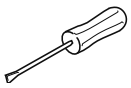

- Place the feed dog gauge under the presser foot with its recess facing downwards.
- Lower the presser foot onto the gauge.
- Loosen nut **1** and turn screw **2** out a few turns.
- Move the knee lever to the right until a noticeable resistance is felt, making sure that the presser foot is not lifted off the gauge, and hold it at this position.
- Turn screw **2** in as far as it will go, then back out by one turn, and lock it in place with nut **1.**

1.05.44 Knee lever play

Requirement
When lightly pressing the knee lever there should be a noticeable play between nut **1** and fork **3.**

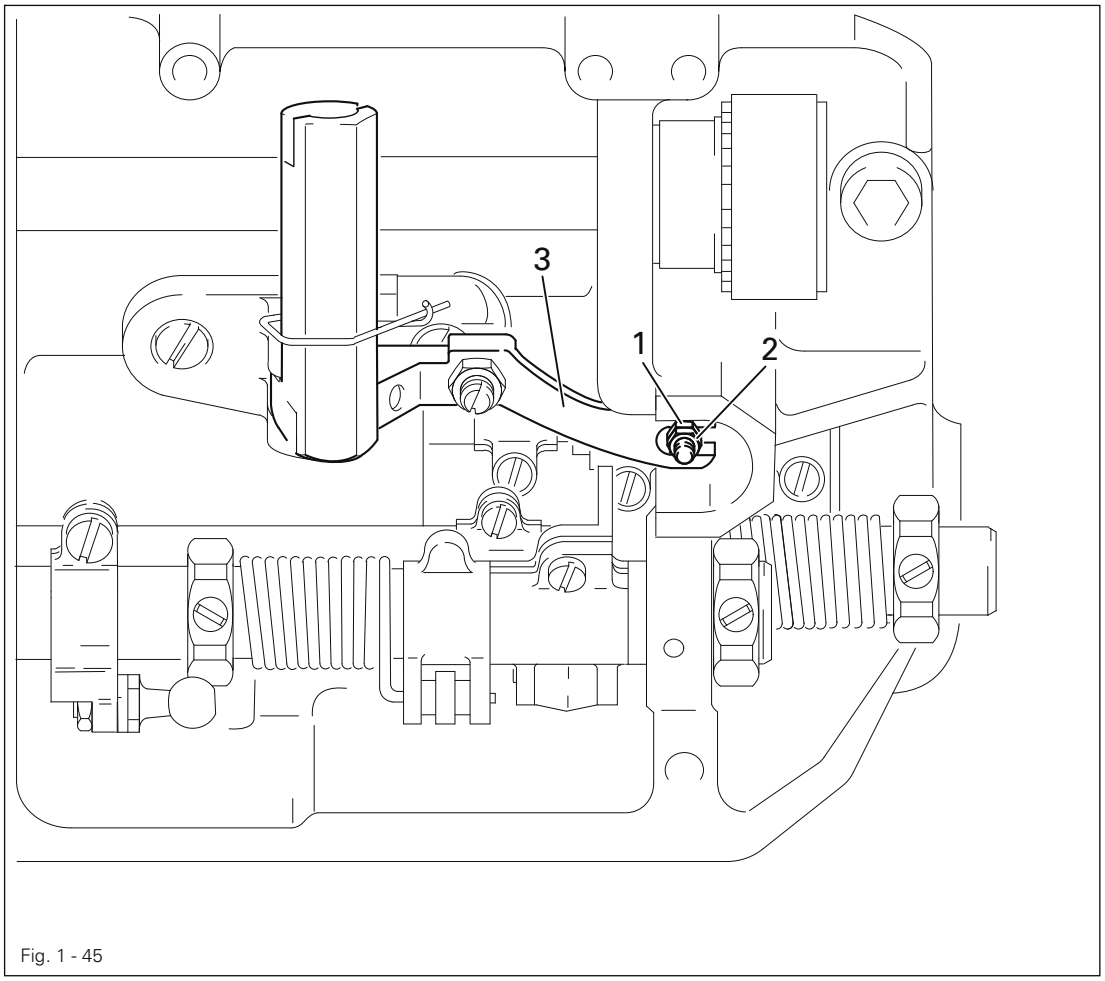

Fig. 1 - 45

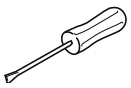

- Turn nut **1** (locknut **2)** in accordance with the **requirement**.

1.05.45 Bobbin winder

Requirement

1. With the bobbin winder engaged the bobbin winder spindle must be turned reliably, but friction wheel **3** must not touch drive wheel **1** when the bobbin winder is switched off.
2. The bobbin winder must disengage automatically when the thread is approx. **1 mm** from the edge of the bobbin.

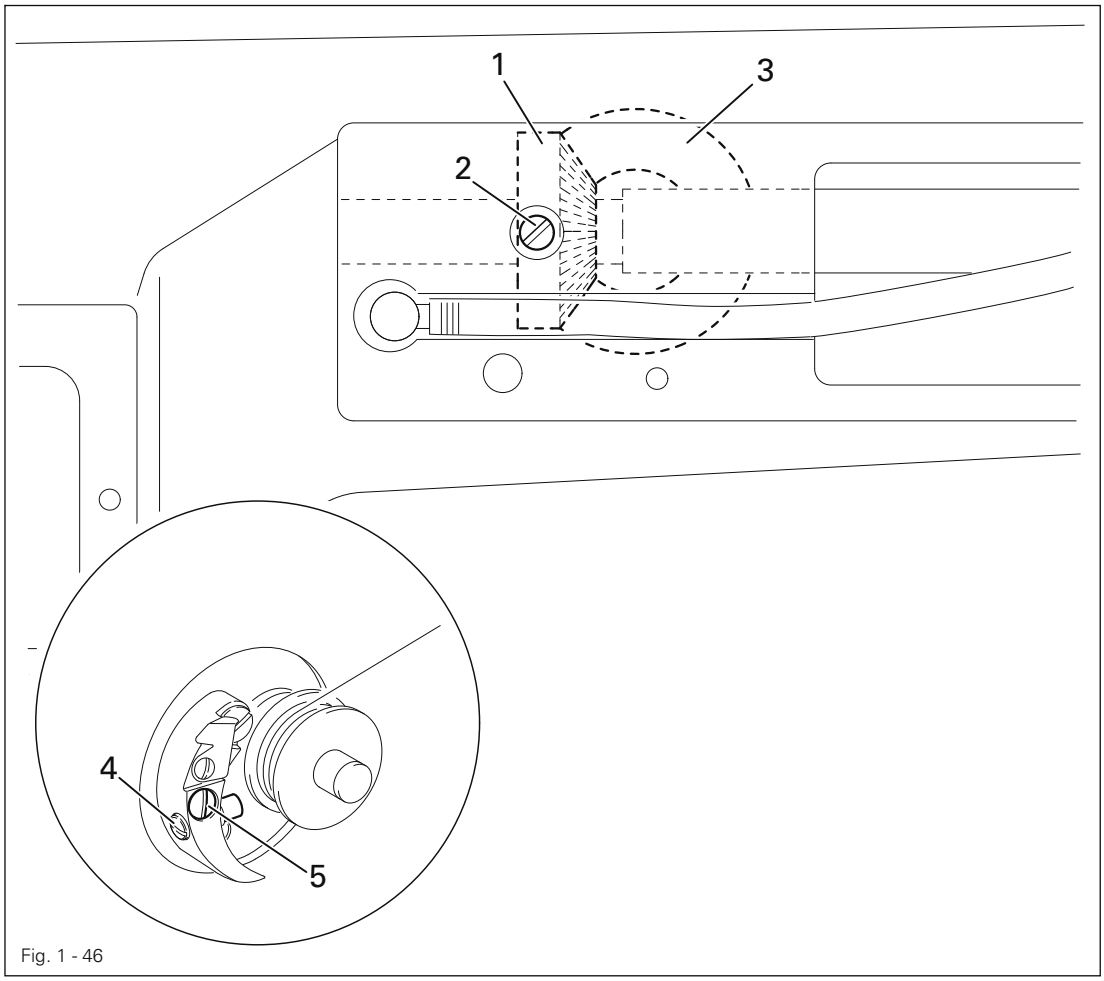

Fig. 1 - 46

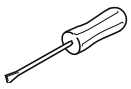

- Position drive wheel **1** in accordance with **requirement 1** and tighten screw **2.**
- Place a bobbin onto the bobbin winder, thread the bobbin and engage the bobbin winder
- Move regulating pin **3** in accordance with **requirement 2** and tighten screw **4.**

1.06 Adjusting the thread trimmer -900/24

1.06.01 Axial position of the control cam

Requirement

1. Roller **5** should be at a distance of **0.3 mm** from the control cam **1.**
2. Adjustment ring **3** should be touching the control cam **1.**

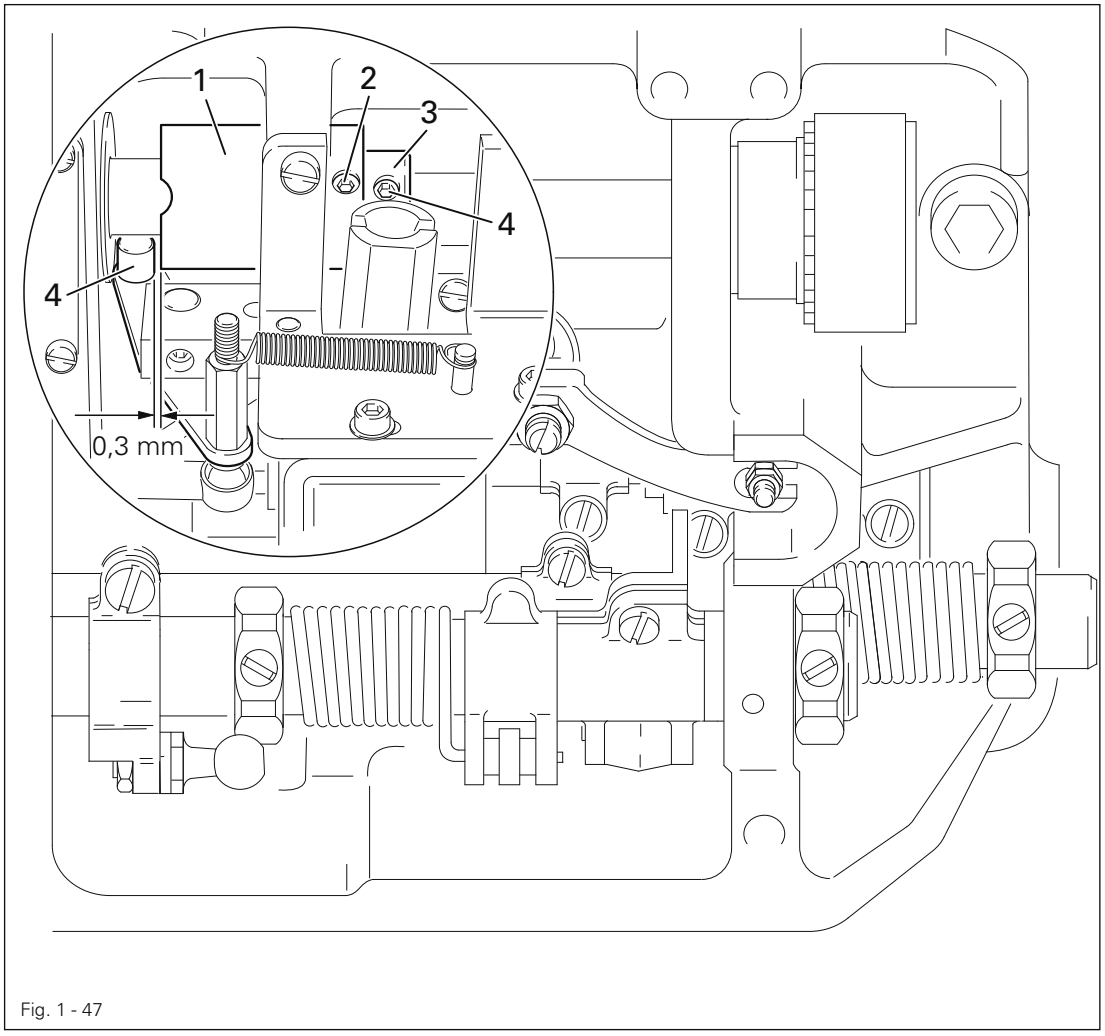

Fig. 1 - 47

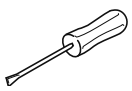

- Shift control cam **1** (screw **2)** and adjustment ring **3** (screw **4)** in accordance with the **requirement**s.

1.06.02 Preliminary adjustment of the control cam

Requirement

1. In the needle rise position (hole **1)** the roller lever **4** should lock into the corresponding groove of the control cam.
2. The control cam **1** should be touching adjustment ring **3.**

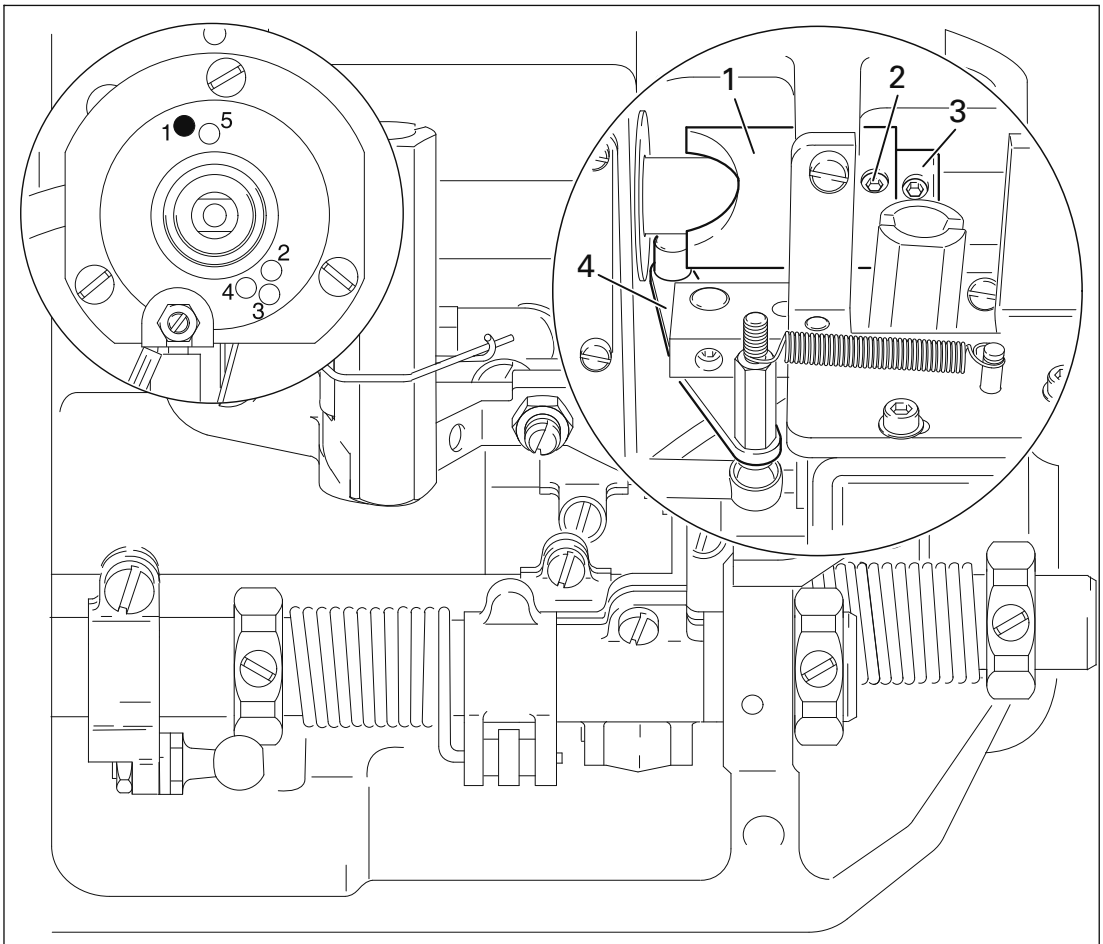

Fig. 1 - 48

- Turn control cam **1** (screws **2)** in accordance with **requirement 1** and shift it in accordance with **requirement 2.**

1.06.03 Position of the thread catcher and cutting test

Requirement
When the thread trimmer is in its neutral position, the edge of thread catcher **6** should be flush with the edge of the mounting plate **4.**

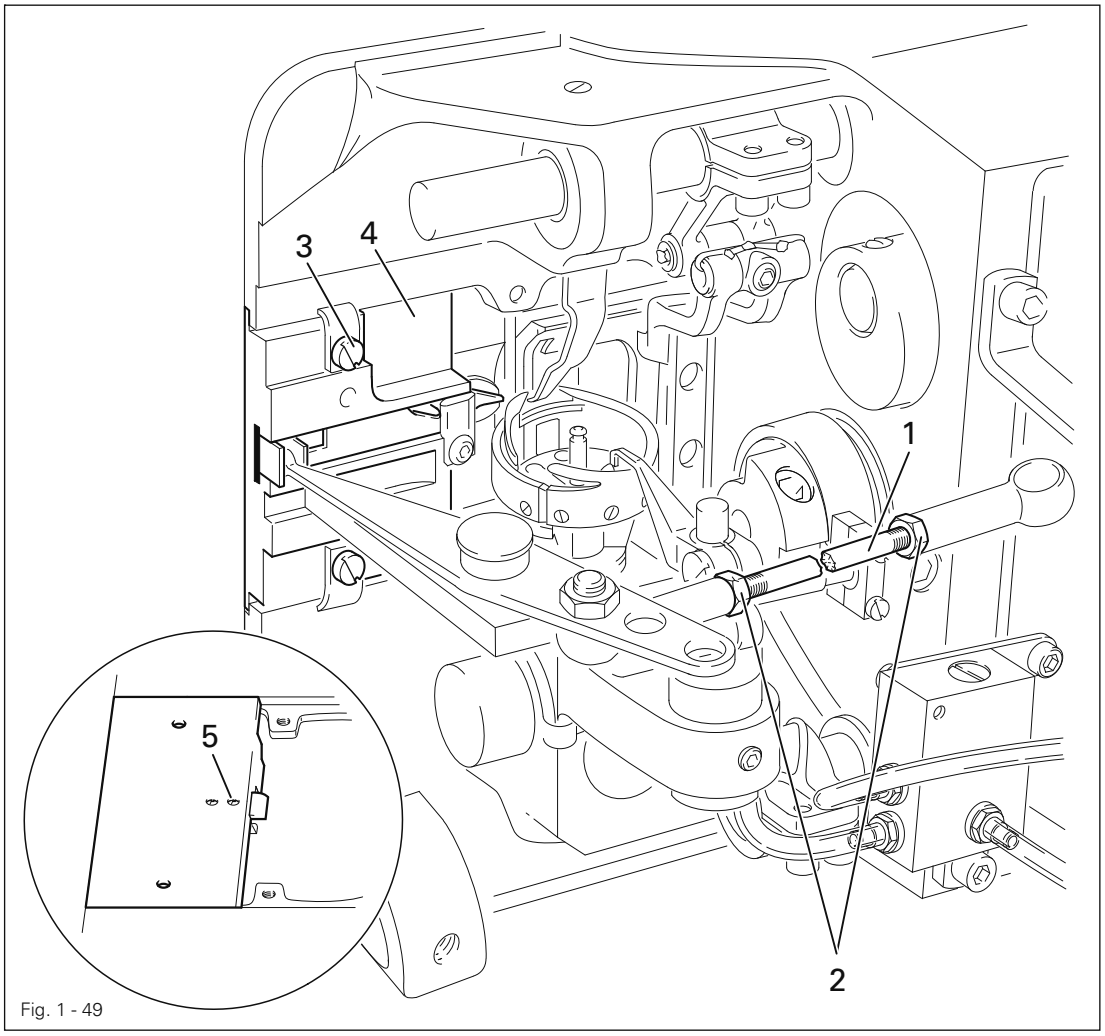

Fig. 1 - 49

- Turn linkage rod **1** (nuts **2,** left and right thread) in accordance with the **requirement**.
- During the cutting test, remove linkage rod **1,** loosen screws **3** and remove mounting plate **4.**
- Carry out the cutting test with double thread.
- By turning screw **5** adjust the cutting pressure.
- Fit mounting plate **4** so that its edge is flush with the edge of the bed-plate.
- Tighten screws **3** and replace linkage rod **1.**

1.06.04 Readjustment of the control cam

Requirement

1. When the end of the hook guard **3** is level with of the right edge of the bobbin case position finger **4,** the thread catcher **5** should begin moving forwards.
2. The control cam **1** should be touching adjustment ring **6.**

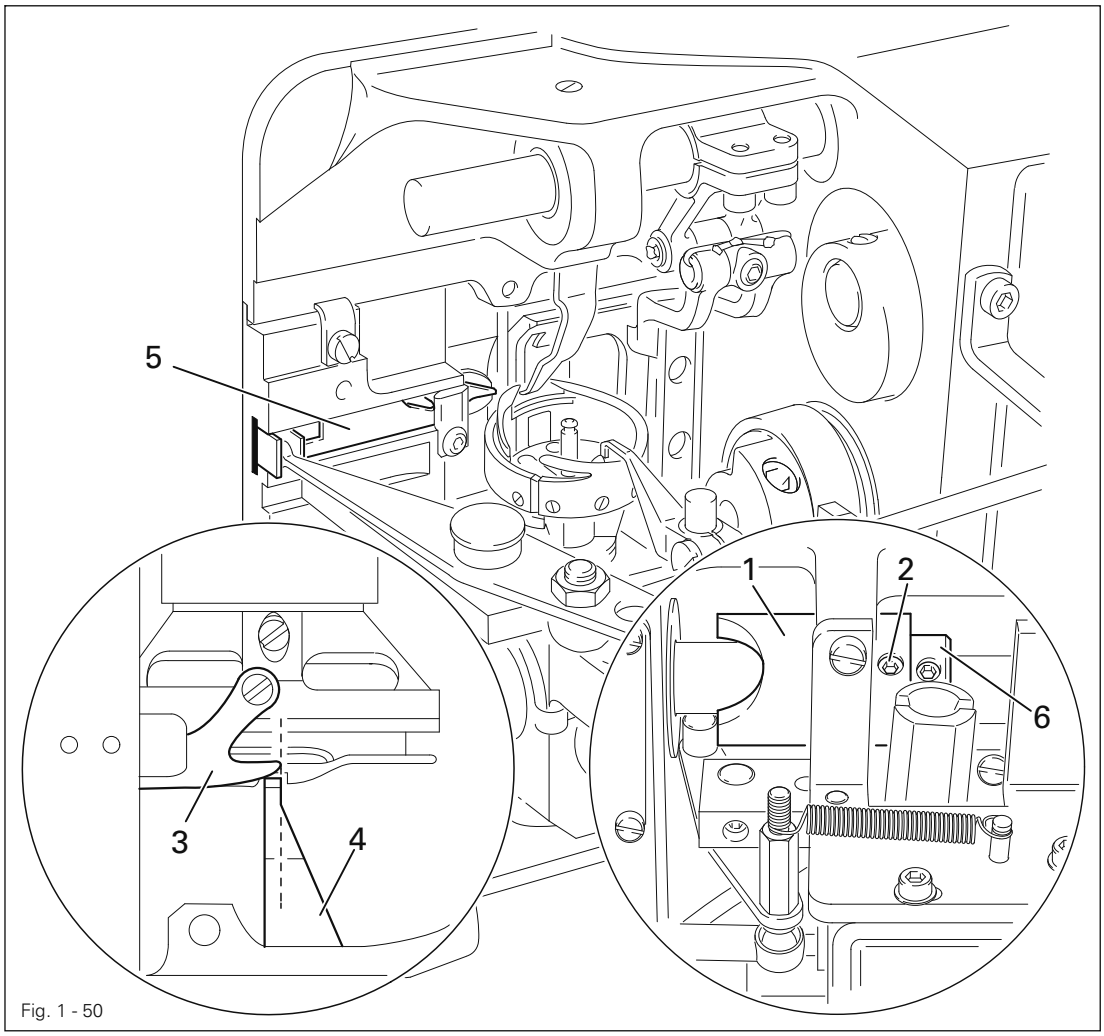

Fig. 1 - 50

- Bring the needle bar to b.d.c.
- Turn control cam **1** (screws **2)** in accordance with **requirement 1** and shift it in accordance with **requirement 2.**

1.06.05 Needle thread tension release

Requirement

1. When solenoids **1** are activated, the tensions disks **4** should be at least **0.5 mm** apart.
2. When the thread trimmer is in its neutral position and the sewing foot is positioned on the needle plate, the tension should be fully effective.

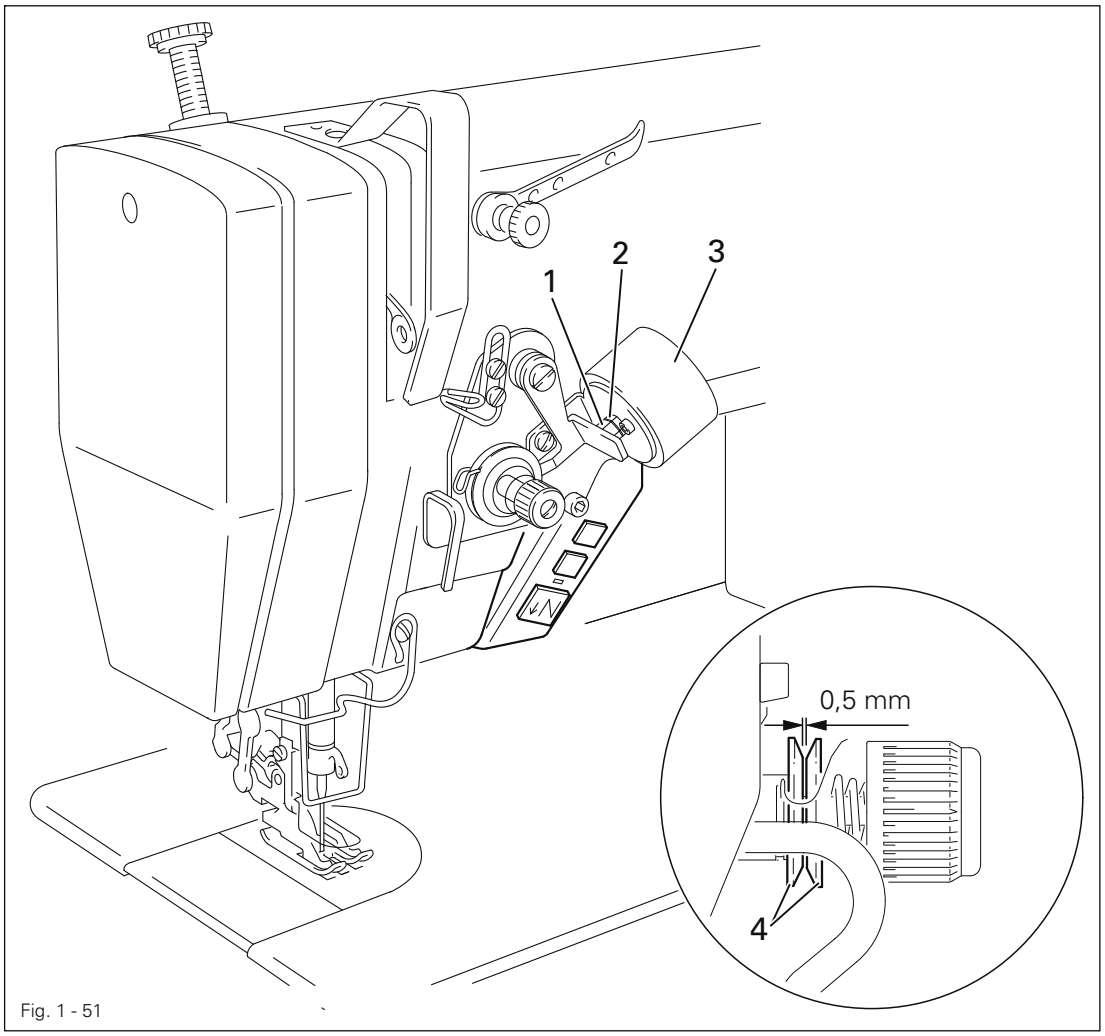

Fig. 1 - 51

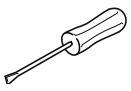

- Turn nut **1** (locknut **2**) in accordance with the **requirement**s.

2 Switch diagrams

2.01 Pneumatics-switch diagram

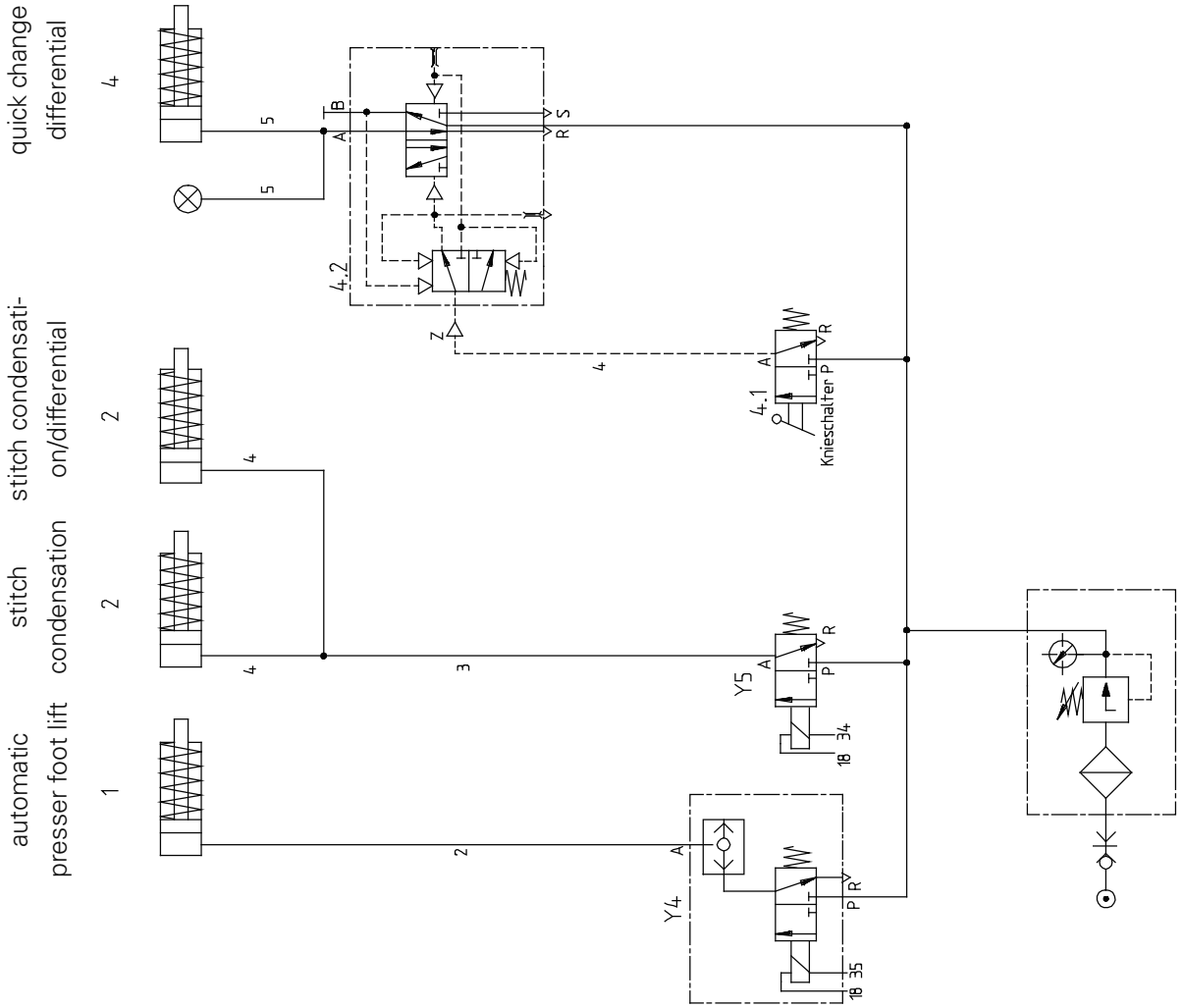

2.02 Circuit diagrams

Reference list for circuit diagrams 91-191 469-95

A1	Controller P40 ED
A2	Control panel S3
A14	Sewing head identification (OTE)
B1	Initiator zig-zag stitch control
H1	Sewing lamp
H10	LED Stitch counter
M1	Sewing motor
M2	-771/05 knife motor (optional)
Q1	Main switch
S1	Pedal set value transmitter
S12	Key for -771/05 knife motor (optional)
S41	Manual backtacking
S42	Needle position change key
S43	Single stitch key
S46	Start inhibitor key
X0	RS232 interface (PC)
X1	Motor
X2	Incremental transmitter
X3	Set value transmitter
X4	Control panel S3
X5	Inputs/outputs
X6	Bobbin thread (optional)
X7	Light barrier (optional)
X12	-771/05 S12 Key for knife motor (optional)
X21	-771/05 M2 knife motor (optional)
X22	-900/.. thread trimmer (FS)
X23	-909/03 thread wiper
X24	-910/.. automatic presser foot lift
X25.1	-911/.. backtacking device
X25.2	-918/18 zig-zag switch
X28	Thread tension release (FSL)
X40	Keyboard
X46	Start inhibitor
X50	Sewing head identification (OTE)
Y2	-900/.. thread trimmer
Y3	-909/03 thread wiper
Y4	-910/.. automatic presser foot lift
Y5.1	-911/.. backtacking device
Y5.2	-918/18 zig-zag switch
Y8	Thread tension release (FSL)

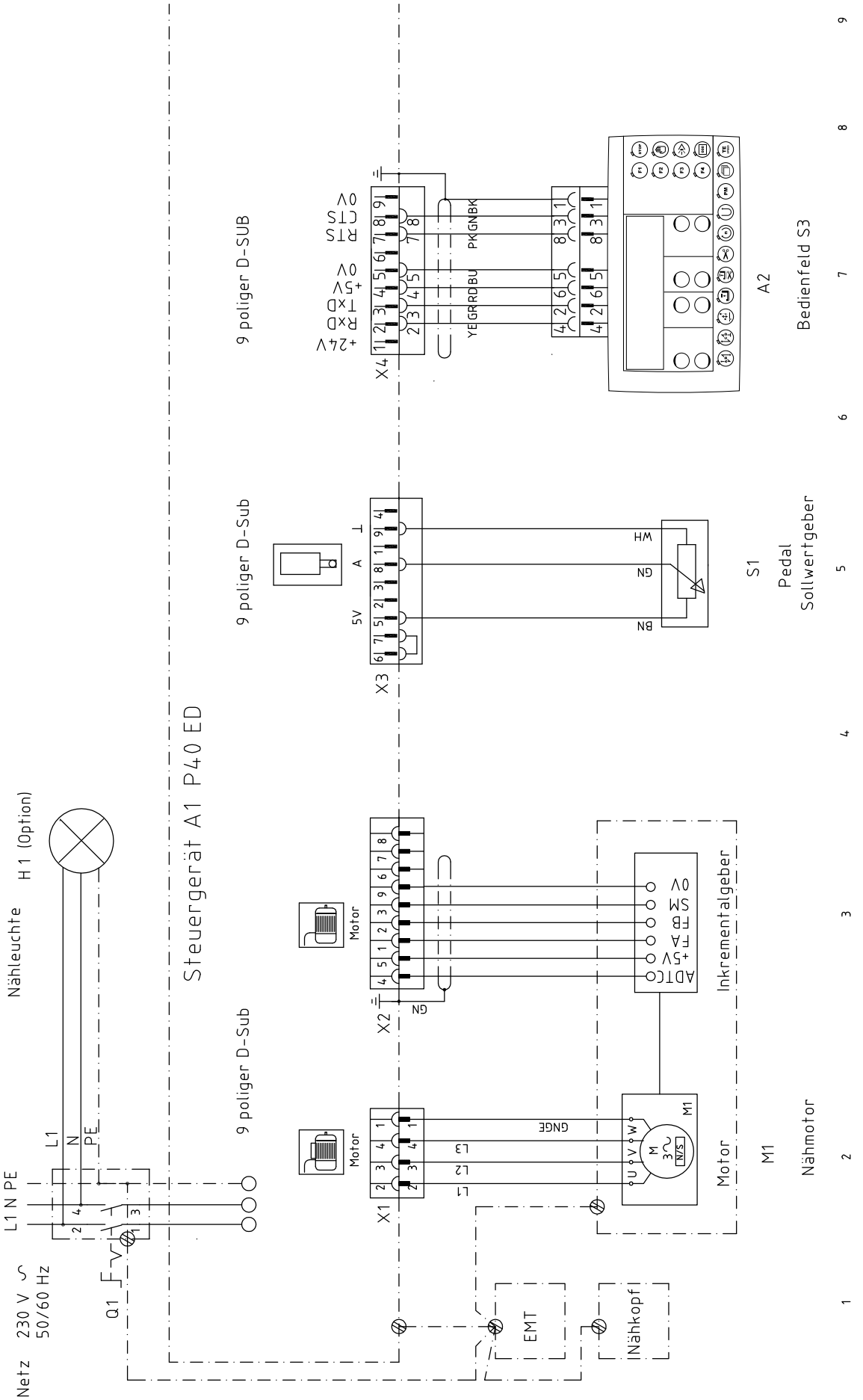
Steuergerät A1 P40 ED
9 poliger D-SUB
9 poliger D-Sub
9 poliger D-Sub
X1
X2
X3
X4
Motor
Motor
Motor
Inkrementalgeber
ADTC
+5V
FA
FB
SM
0V
M1
Nähmotor
S1
Pedal
Sollwertgeber
A2
Bedienfeld S3
Nähleuchte
H 1 (Option)
Netz
230 V ~
50/60 Hz
L1 N PE
Q1
EMT
Nähkopf

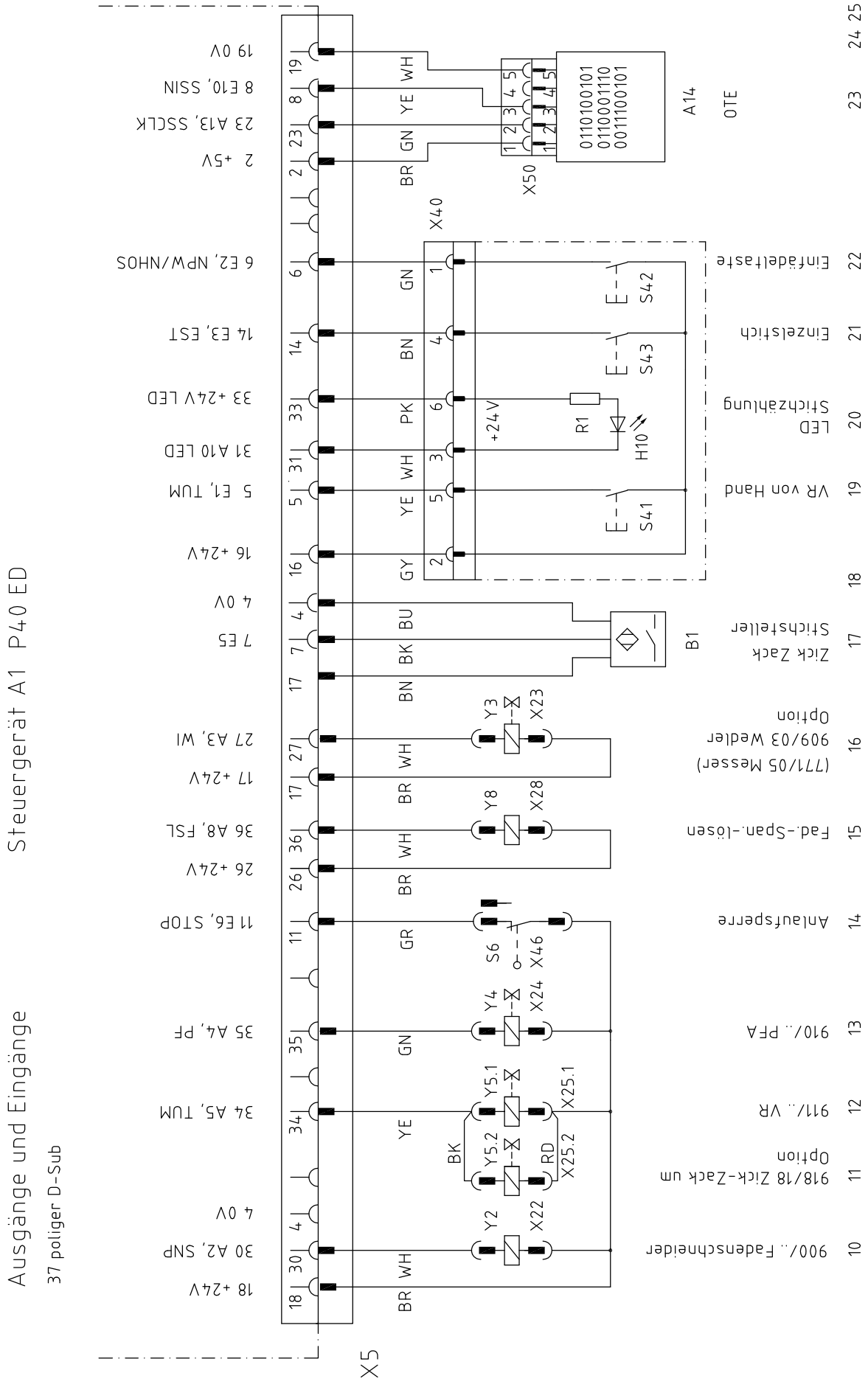
Steuergerät A1 P40 ED
Ausgänge und Eingänge
37 poliger D-Sub
X5
19 0V
8 E10, SSIN
23 A13, SSCLK
2 +5V
6 E2, NPW/NHOS
14 E3, EST
33 +24V LED
31 A10 LED
5 E1, TUM
16 +24V
4 0V
7 ES
17 +24V
27 A3, WI
26 +24V
36 A8, FSL
11 E6, STOP
4 0V
35 A4, PF
34 A5, TUM
4 0V
30 A2, SNP
18 +24V
X40
X50
A14
OTE
0110100101
0110001110
0011100101
Einfädeltaste
Einzelstich
LED Stichzählung
VR von Hand
Zick Zack Stichsteller
909/03 Weiler Option
(771/05 Messer)
Fad.-Span.-lösen
Anlaufsperre
910/.. PFA
911/.. VR
918/18 Zick-Zack um Option
900/.. Fadenschneider
B1
S41
S42
S43
S6
R1
H10
+24V
Y2
Y3
Y4
Y5.1
Y5.2
Y8
X22
X23
X24
X25.1
X25.2
X28
X46

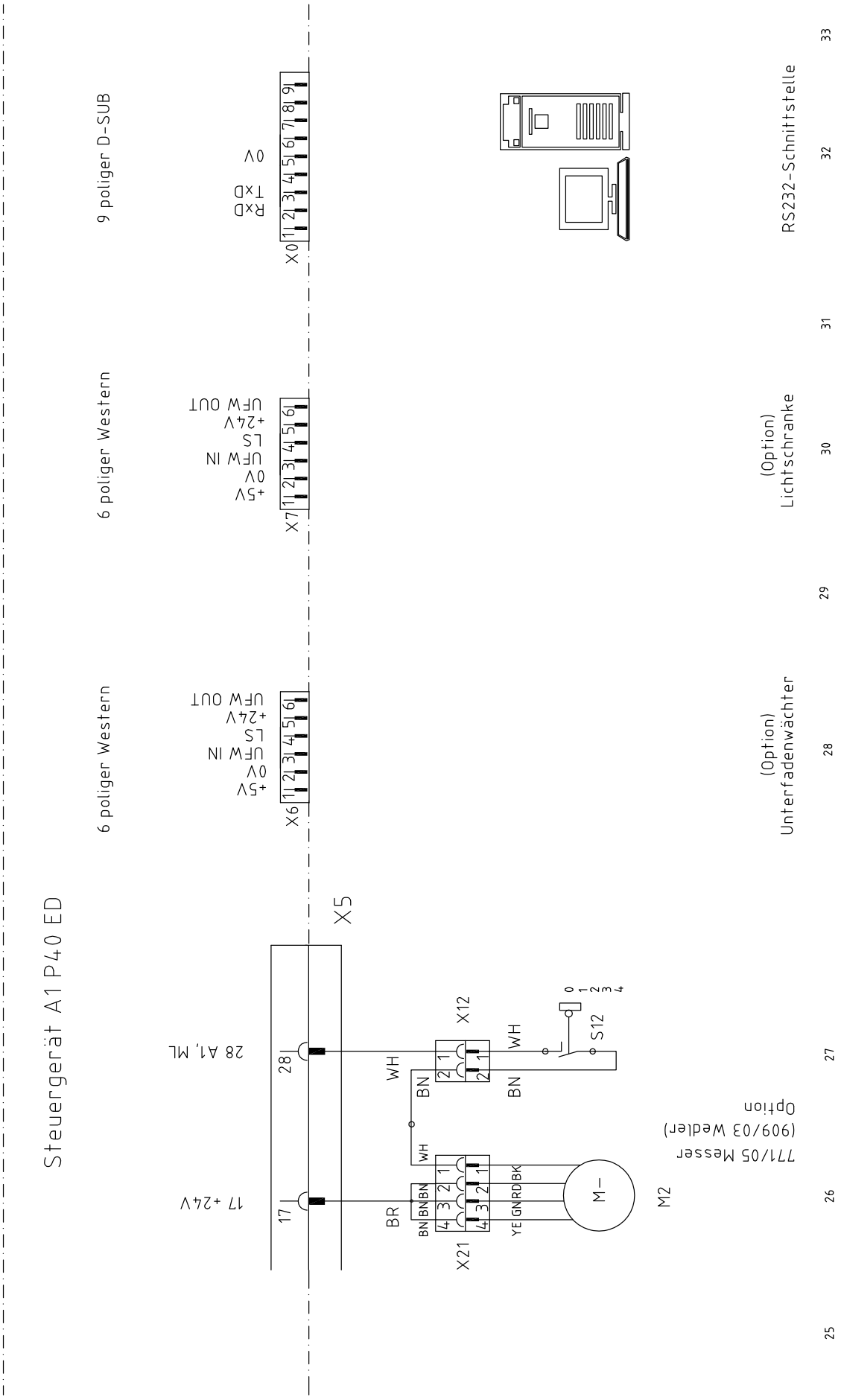
Steuergerät A1 P40 ED
9 poliger D-SUB
RxD
TxD
0V
X0
RS232-Schnittstelle
6 poliger Western
+5V
0V
UFW IN
LS
+24V
UFW OUT
X7
(Option)
Lichtschranke
6 poliger Western
+5V
0V
UFW IN
LS
+24V
UFW OUT
X6
(Option)
Unterfadenwächter
X5
28 A1, ML
17 +24V
X12
S12
WH
BN
BR
X21
M–
M2
771/05 Messer
(909/03 Wedler)
Option
25
26
27
28
29
30
31
32
33

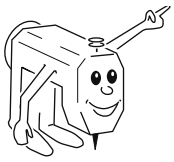

Note

PFAFF® Industrial



Europäische Union
Wachstum durch Innovation – EFRE



PFAFF Industriesysteme
und Maschinen AG

Hans-Geiger-Str. 12 - IG Nord
D-67661 Kaiserslautern

Phone: +49-6301 3205 - 0
Fax: +49-6301 3205 1386
E-mail: info@pfaff-industrial.com

Hotlines:

Technical service:	+49-175/2243-101
Application consultance:	+49-175/2243-102
Spare-parts hotline:	+49-175/2243-103

Printed in Germany

© PFAFF Industriesysteme und Maschinen AG 2009, PFAFF is the exclusive trademark of VSM Group AB.PFAFF Industriesysteme und Maschinen AG is an authorized licensee of the PFAFF trademark.