PFAFF® Industrial

939 U
3704 -2/02 -2/03

ADJUSTMENT MANUAL

This Adjustment Manual is valid for machines from the following serial numbers onwards:
2 660 862 ⟶

296-12-18 595/002
Justieranleitung engl. 01.13

The reprinting, copying or translation of PFAFF Service Manuals, whether in whole or in part, is only permitted with our previous authorization and with written reference to the source.

PFAFF Industriesysteme
und Maschinen AG

Hans-Geiger-Str. 12 - IG Nord
D-67661 Kaiserslautern

Contents ..... Page

1	**Adjustment**	**5**
1.01	Tools, gauges and other accessories for adjusting	5
1.02	Abbreviations	5
1.03	Explanation of the symbols	5
1.04	Check and adjustment aid	6
1.05	Adjusting the basic machine	7
1.05.01	Balancing weight	7
1.05.02	Centering the needle in the needle hole (in sewing direction)	8
1.05.03	Parallel guiding of the needle bar	9
1.05.04	Locking lever	10
1.05.05	Zero stitch and zigzag stitch scale	11
1.05.06	Centering the needle in the needle hole (crosswise to sewing direction)	12
1.05.07	Zigzag stitch width	13
1.05.08	Multi-stitch movement (only on the PFAFF 939U)	14
1.05.09	Zigzag stitch movement (only on the PFAFF 3704-2/..)	15
1.05.10	Needle penetration symmetry - left, centre and right (only on the PFAFF 3704-2/..)	16
1.05.11	Zigzag movement (only on the 939U)	17
1.05.12	Target positioning sensor (only on the 939U)	18
1.05.13	Needle position adjustment lever	19
1.05.14	Adjustment wheels for differential feed (only on the PFAFF 939U)	20
1.05.15	Zeroing the differentiatio (only on the PFAFF 939 U)	21
1.05.16	Differential feed synchronisation (only on the PFAFF 3704-2/..)	22
1.05.17	Position of the stitch length adjustment wheel (on the PFAFF 939 U)	23
1.05.18	Position of the stitch length adjustment wheel (on the PFAFF 3704-2/..)	24
1.05.19	Zeroing the main feed (rear feed dog) on the PFAFF 939 U	25
1.05.20	Zeroing the main feed (rear feed dog) on the PFAFF 3704-2/..	26
1.05.21	Zeroing the differential feed (front feed dog) on the PFAFF 939 U	27
1.05.22	Zeroing the differential feed (front feed dog) on the PFAFF 3704-2/..	28
1.05.23	Torsion spring of the reverse feed lever (on the PFAFF 939 U)	29
1.05.24	Torsion spring of the reverse feed lever (on the PFAFF 3704-2/..)	30
1.05.25	Torsion spring of the differentiation regulating shaft (on the PFAFF 939 U)	31
1.05.26	Torsion spring of the differentiation regulating shaft (on the PFAFF 3704-2/..)	32
1.05.27	Feeding motion of the main and differential feeds	33
1.05.28	Lifting stroke of the main and differential feed dogs	34
1.05.29	Height of the main and differential feed dogs	35
1.05.30	Drive belt in the gearbox housing	36
1.05.31	Hook bearing bracket	37

Contents ..... Page

1.05.32	Hook lubrication	38
1.05.33	Pre-adjusting the needle height	39
1.05.34	Needle rise, hook-to-needle clearance and bobbin case positioning-finger	40
1.05.35	Final adjustment of the needle height	41
1.05.36	Bobbin case opener position	42
1.05.37	Bobbin case opener motion	43
1.05.38	Presser foot to needle plate clearance / Presser foot pressure	44
1.05.39	Thread diverter pin	45
1.05.40	Limiting the knee lever stroke	46
1.05.41	Knee lever play	47
1.05.42	Bobbin winder	48
1.05.43	Stitch condensation (only on the PFAFF 3704-2/02)	49
1.05.44	Switching to reverse feed (only on the PFAFF 3704-2/03)	50
1.05.45	Thread puller (only on the PFAFF 3704-2/02)	51
1.06	**Adjusting the thread trimmer -900/24**	52
1.06.01	Axial position of the control cam	52
1.06.02	Preliminary adjustment of the control cam	53
1.06.03	Position of the thread catcher and cutting test	54
1.06.04	Readjustment of the control cam	55
1.06.05	Needle thread tension release	56
2	**Switch diagrams**	57

1 Adjustment



On the PFAFF 939 U and 3704 do not use a screw clamp on the needle bar! The special coating of the needle bar could be damaged.



Please observe all notes from Chapter 1 Safety of the instruction manual! In particular care must be taken to see that all protective devices are refitted properly after adjustment, see Chapter 1.06 Danger warnings of the instruction manual!
If not otherwise stated, the machine must be disconnected from the electrical power supply.
Danger of injury due to unintentional starting of the machine!

Notes on adjustment

All following adjustments are based on a fully assembled machine and may only be carried out by expert staff trained for this purpose. Machine covers, which have to be removed and replaced to carry out checks and adjustments, are not mentioned in the text.
The order of the following chapters corresponds to the most logical work sequence for machines which have to be completely adjusted. If only specific individual work steps are carried out, both the preceding and following chapters must be observed.
Screws, nuts indicated in brackets ( ) are fastenings for machine parts, which must be loosened before adjustment and tightened again afterwards.

1.01 Tools, gauges and other accessories for adjusting

- 1 set of screwdrivers with blade widths from 2 to 10 mm
- 1 set of wrenches with jaw widths from 7 to 14 mm
- 1 set of Allan keys from 1.5 to 6 mm
- 1 metal rule, (Part No. 08-880 218-00)
- Feed dog adjustment gauge, part no. 91-119 995-05
- 1 adjustment pin (5 mm dia.), Part No.. 13-030 341-05
- Hook bearing adjustment gauge, part no. 91-119 996-05

1.02 Abbreviations

TDC = top dead center
BDC = bottom dead center

1.03 Explanation of the symbols

In this adjustment manual, symbols emphasize operations to be carried out or important information. The symbols used have the following meaning:



Note, information

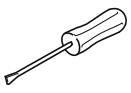

Service, repair, adjustment, maintenance

(work to be carried out by qualified staff only)

1.04 Check and adjustment aid

By blocking with holes **1** - **5** the required needle bar positions can be fixed exactly.

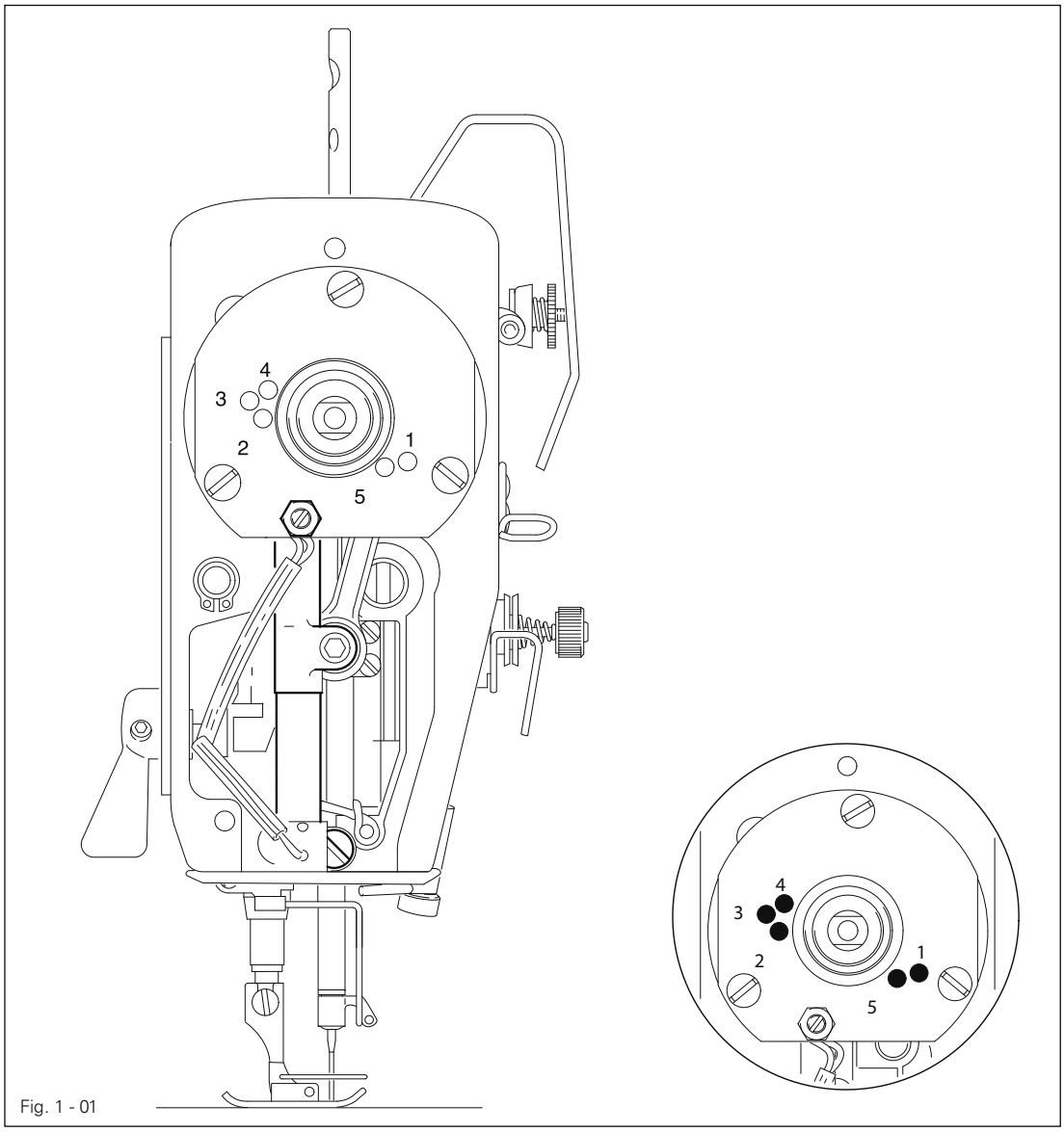

Fig. 1 - 01

- Turn the balance wheel until the needle bar has approximately reached the required position.
- Place the **5 mm** blocking pin in the appropriate hole and put pressure on it.
- Turn the balance wheel forwards and backwards a little until the blocking pin moves into the slot in the crank behind the bearing plate, thus blocking the machine.

Hole 1 = **2.0 mm** after the bottom dead center of the needle bar (2.0 past tdc)
Hole 2 = Top dead center of the needle bar (tdc)
Hole 3 = **0.25 mm** after the top dead center of the needle bar (0.25 past bdc)
Hole 4 = **1.0 mm** after the top dead center of the needle bar (1.0 **mm** past tdc)
Hole 5 = **4 mm** after the bottom dead center of the needle bar (4.0 past bdc)

1.05 Adjusting the basic machine

1.05.01 Balancing weight

Requirement
With the needle bar at bdc the largest eccentricity of the balancing weight **1** must be pointing upwards.

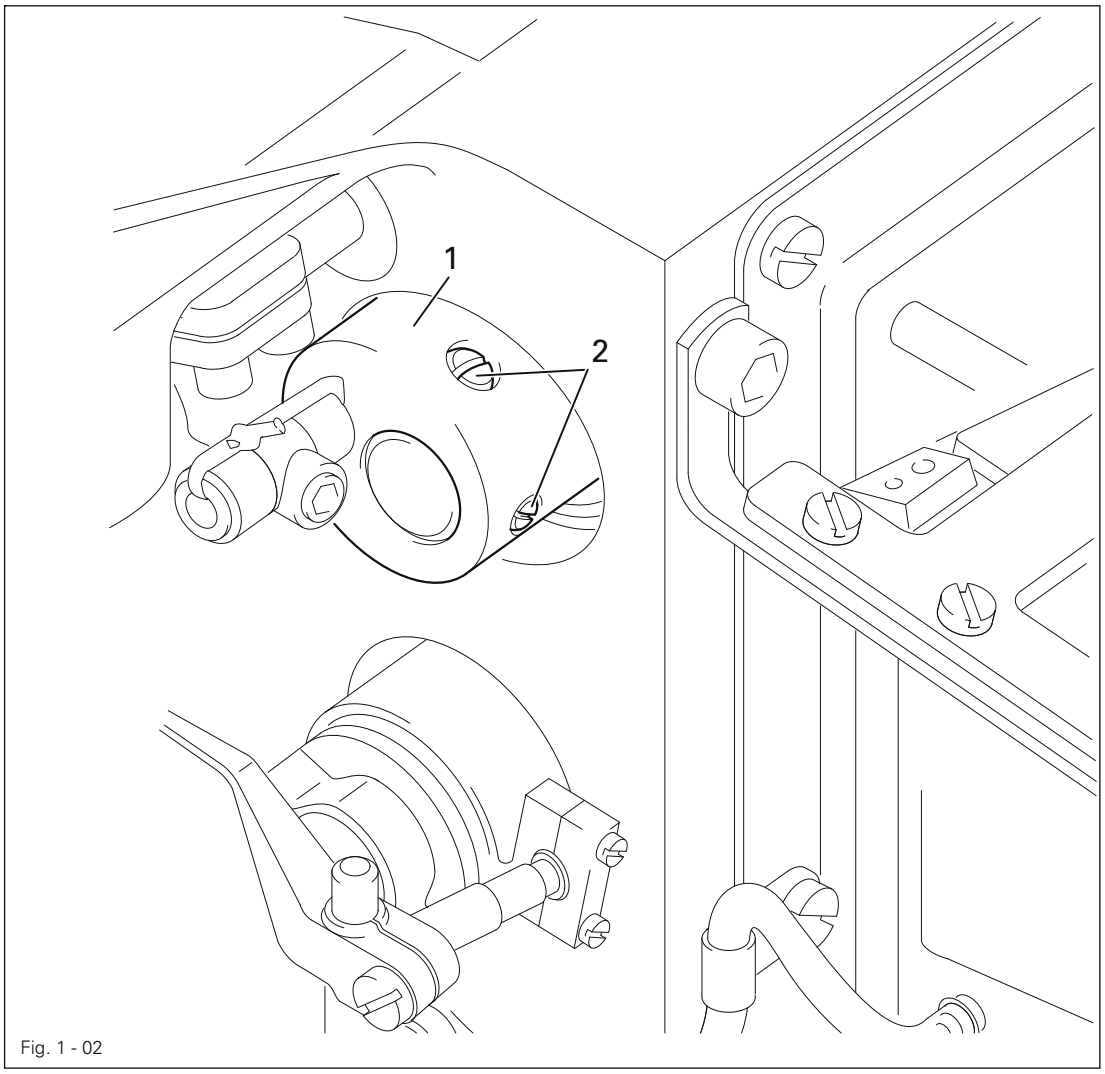

Fig. 1 - 02

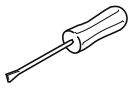

- Bring the needle bar to b.d.c.
- Adjust the balance weight **1** (screw **2**) in accordance with the **requirement**.

1.05.02 Centering the needle in the needle hole (in sewing direction)

Requirement
With the zigzag setting at "**0**" and the needle position set at "**middle**" the needle must enter the center of the needle hole as viewed in the direction of sewing.

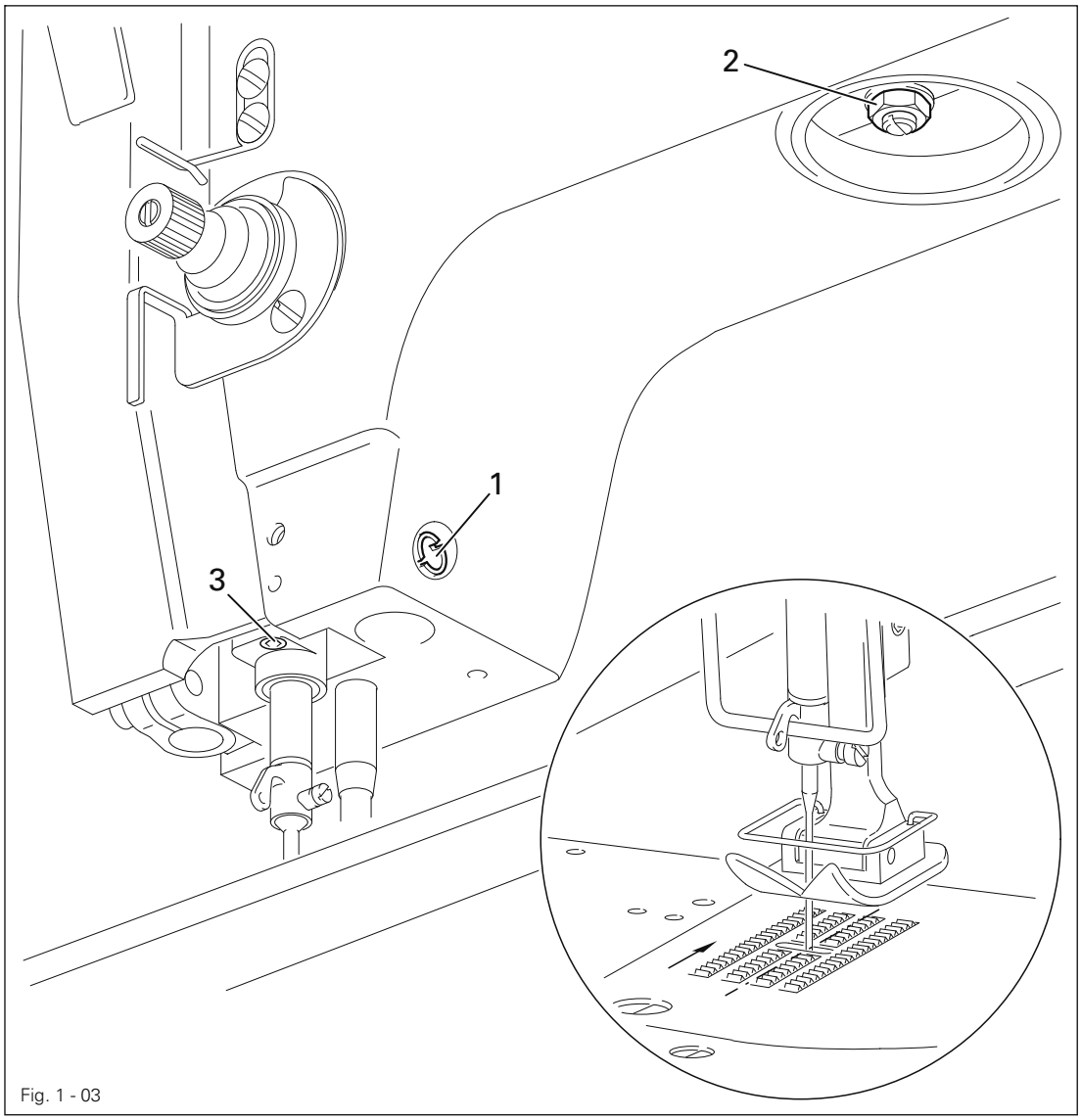

Fig. 1 - 03

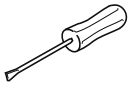

- Bring the needle bar to b.d.c.
- Adjust the eccentric pin **1** (nut **2** and screw **3)** in accordance with the **requirement**.

1.05.03 Parallel guiding of the needle bar

Requirement
Guide bar **5** must be parallel to the needle bar.

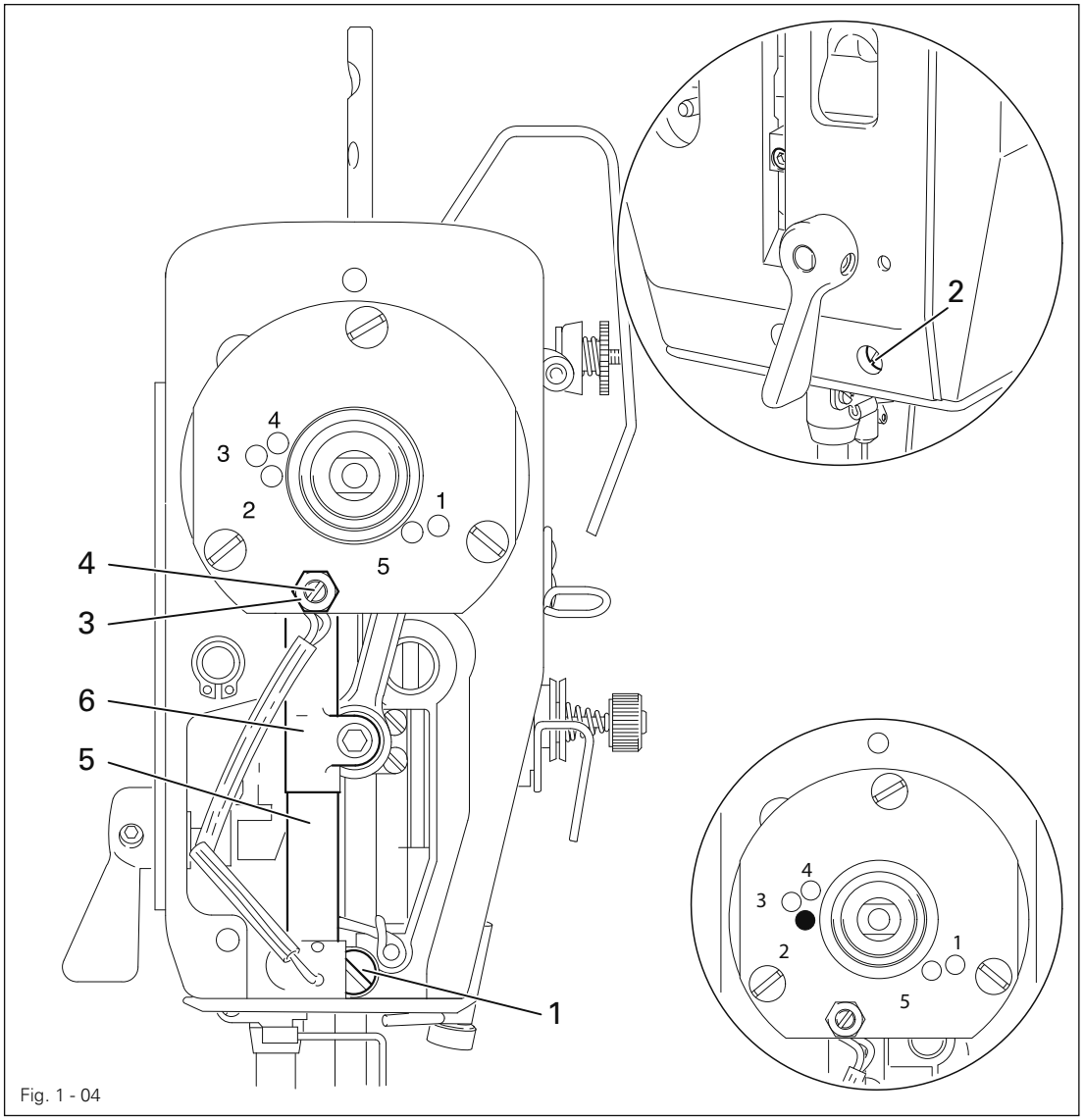

Fig. 1 - 04

- Bring the needle bar to tdc (hole **2**).
- Loosen screws **1**,**2** and nut **3**.
- The largest eccentricity of pin **4** must be facing downwards.
- Bring the groove on guide bar **5** into a position in which it rests against eccentric pin **4**, turn eccentric pin **4** in accordance with the **requirement** and tighten nut **3**.
- Push guide bar **5** downwards and then upwards as far as possible. Bushing **6** must not move laterally during this movement (readjust eccentric pin **4** if necessary).
- Move guide bar **5** until it rests against eccentric pin **4** and tighten screws **1** and **2**.

1.05.04 Locking lever

Requirement
The zigzag stitch adjustment lever **3** must be able to be locked in any position.

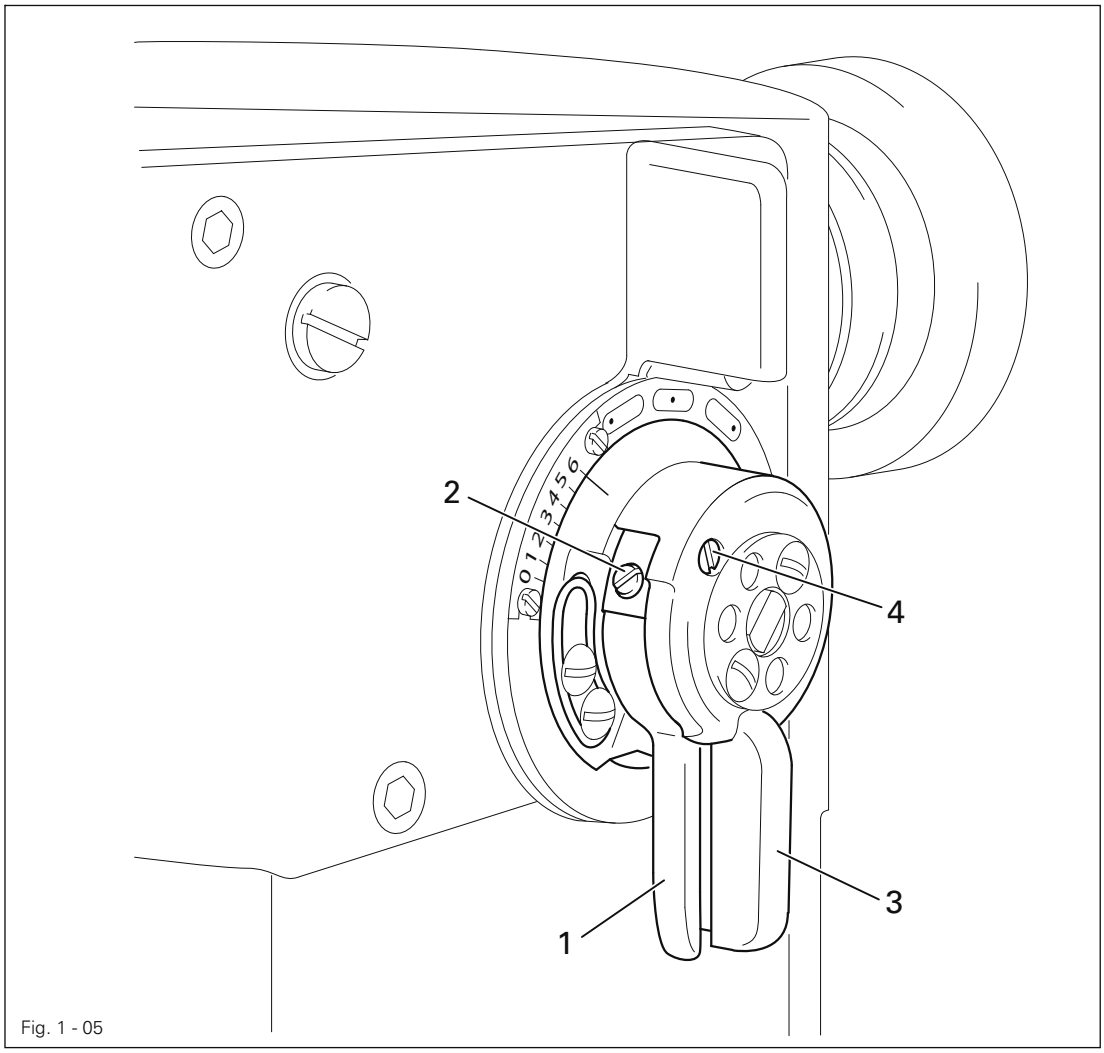

Fig. 1 - 05

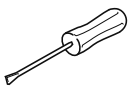

- Loosen screw **2.**
- Press locking lever **1** against the zigzag stitch adjustment lever **3.**
- Turn pivot pin **4** as far as possible to the left.
- Release locking lever **1.**
- Locking lever **1** must be parallel to the zigzag stitch adjustment lever **3.**
- Tighten screw **2.**

1.05.05 Zero stitch and zigzag stitch scale

Requirement

With the zigzag stitch set at "**0**":

1. the needle bar must not move laterally when the balancewheel is turned and
2. the marking "**0**" on scale **1** must be at marking **2.**

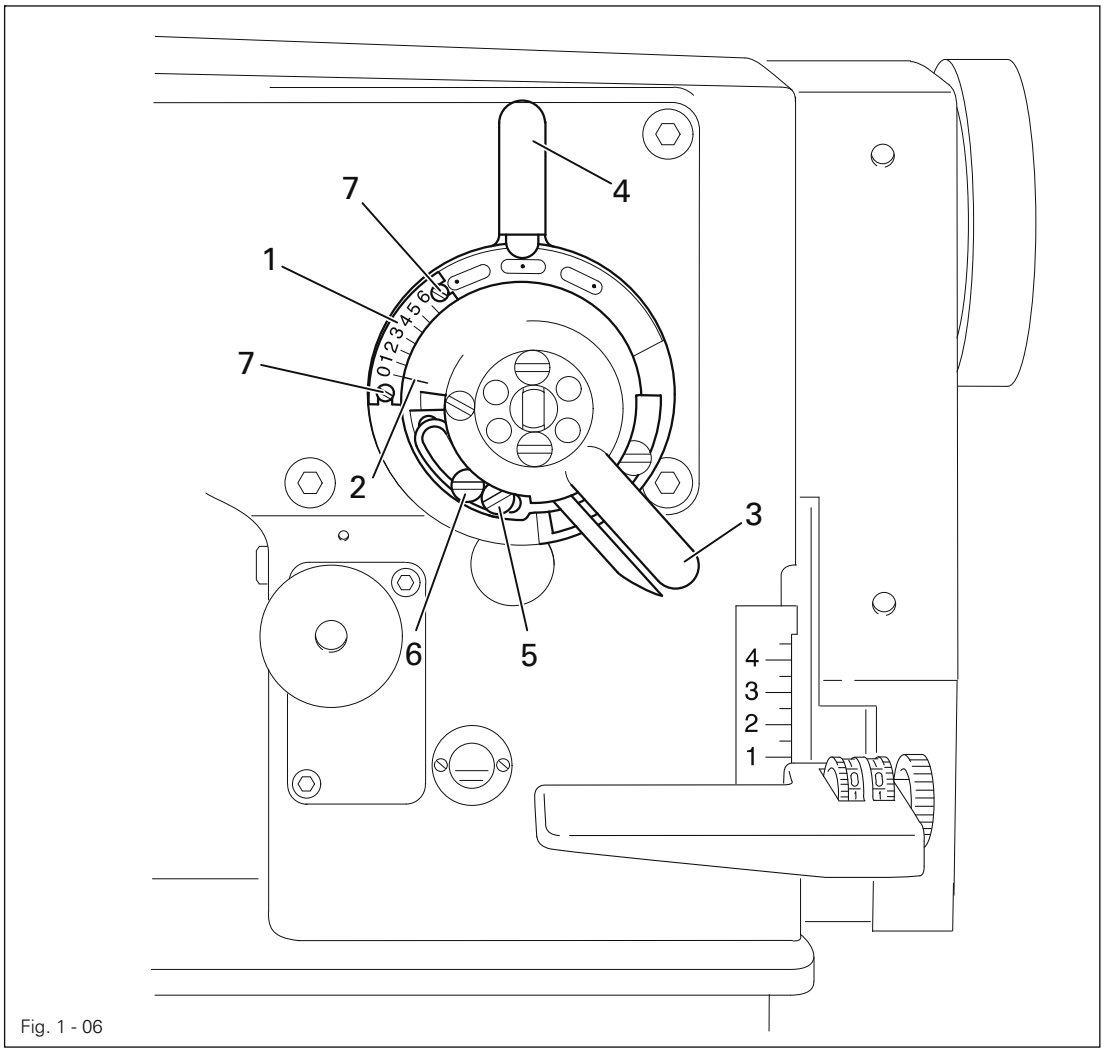

Fig. 1 - 06

- Set the needle position adjustment lever **4** to "**middle**" and loosen screws **5** and **6.**
- Run the machine slowly and turn the zigzag stitch adjustment lever **3** to the right until the needle bar no longer moves laterally.
- Turn the machine off. Move screw **5** to the right until it touches and then tighten it.
- Loosen screws **7** and move scale **1** in accordance with **requirement 2.**
- Tighten screws **7.**

Screw **6** remains loose for the following adjustment.

1.05.06 Centering the needle in the needle hole (crosswise to sewing direction)

Requirement
With the zigzag stitch set at "**0**" and the needle position setting at "**middle**" the needle must enter the center of the needle hole as seen across the direction of sewing.

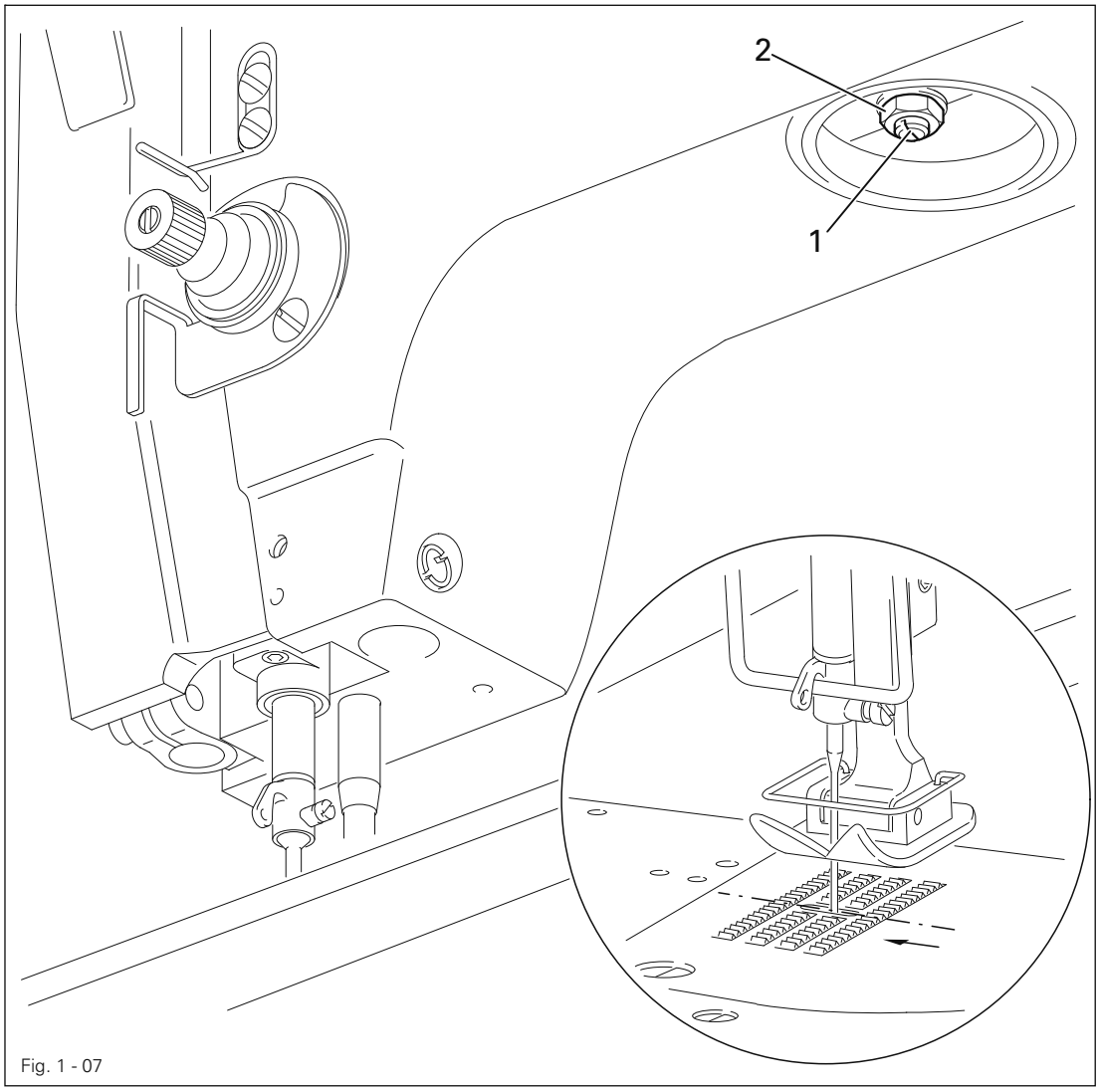

Fig. 1 - 07

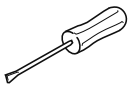

- Adjust the eccentric pin **1** (nut **2**) in accordance with the **requirement**.

1.05.07 Zigzag stitch width

Requirement
At the largest zigzag stitch setting, marking **1** must be at the largest zigzag value on scale **2.**

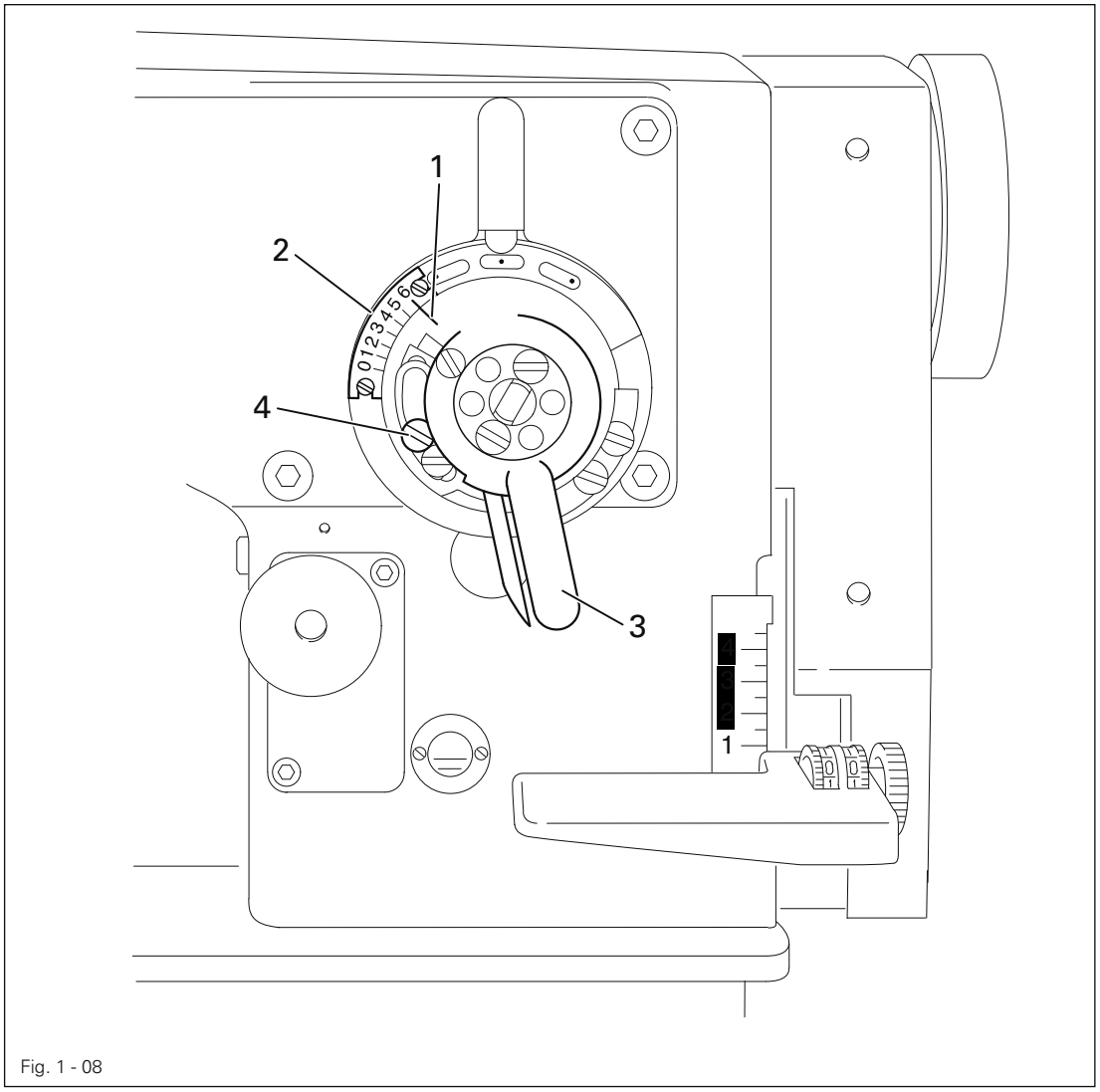

Fig. 1 - 08

- Turn the zigzag stitch adjustment lever **3** in accordance with the **requirement**.
- Move screw **4** upwards until it touches and then tighten it.

If the machine is equipped with a needle plate with a smaller hole than is marked on the scale, the zigzag limit must be set according to the needle hole width on the needle plate.

1.05.08 Multi-stitch movement (only on the PFAFF 939U)

Requirement

1. When the needle, at its b.d.c., penetrates on the right-hand side, the recess **5** on the control cam **3** should be positioned horizontally towards the rear.
2. The lateral movement of the needle bar should have been completed when the needle penetrates the workpiece (carry out a check with the largest zigzag setting).

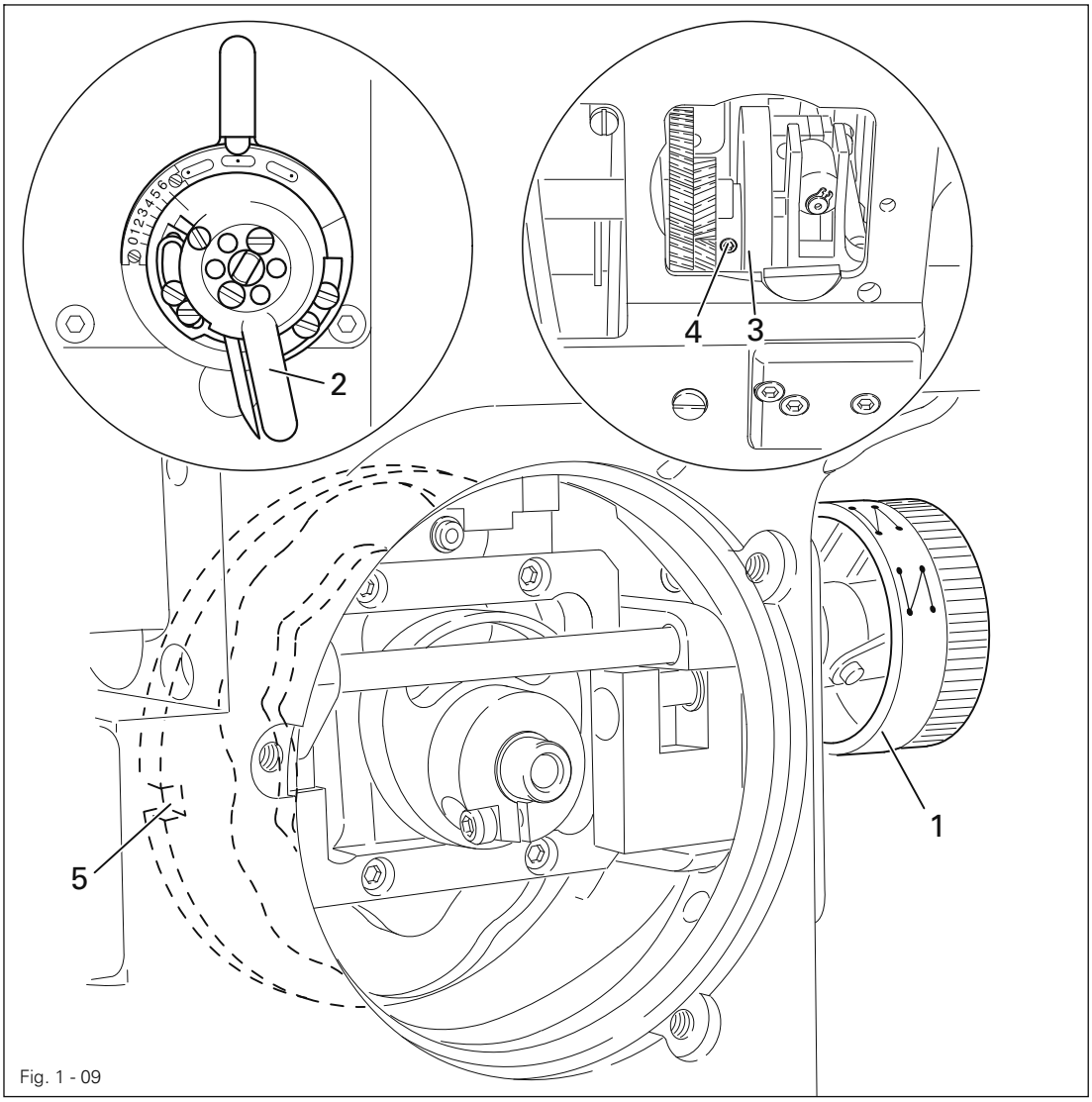

Fig. 1 - 09

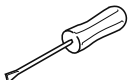

- Set the adjustment wheel **1** at multi-stitch.
- Set the zigzag stitch width lever **2** at "largest zigzag width".
- Adjust control cam **3** (screws **4)** in accordance with the **requirement**.

1.05.09 Zigzag stitch movement (only on the PFAFF 3704-2/..)

Requirement
When the needle bar, on the right of its throw, is positioned at t.d.c. (adjustment hole "**2**"), the needle bar should not move laterally when the zigzag stitch adjustment lever is moved to and fro.

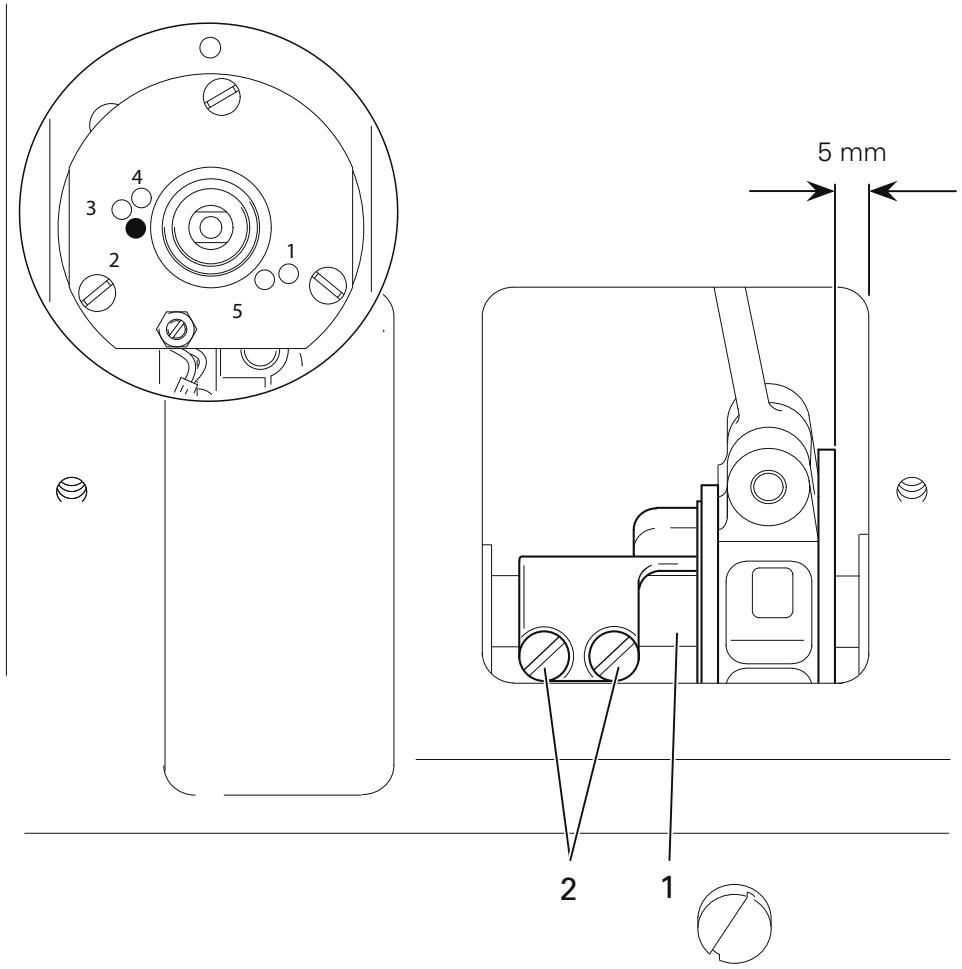

Fig. 1 - 10

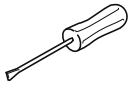

- Bring the needle bar, on the right of its throw, to t.d.c. and place the adjustment pin in hole "**2**" of the bearing plate (locking the machine).
- Turn the zigzag eccentric **1** (screws **2)** in accordance with the **requirement**. Make sure that he zigzag eccentric **1** is about **5 mm** away from the right inner side of the casting wall.
- Remove the adjustment pin from the bearing plate.

1.05.10 Needle penetration symmetry - left, centre and right (only on the PFAFF 3704-2/..)

Requirement
When the zigzag stitch is set at "**0**", the needle should penetrate in the centre of the needle hole. With the maximum zigzag stitch set, the needle should penetrate on the left and right at the same distance from the centre hole.

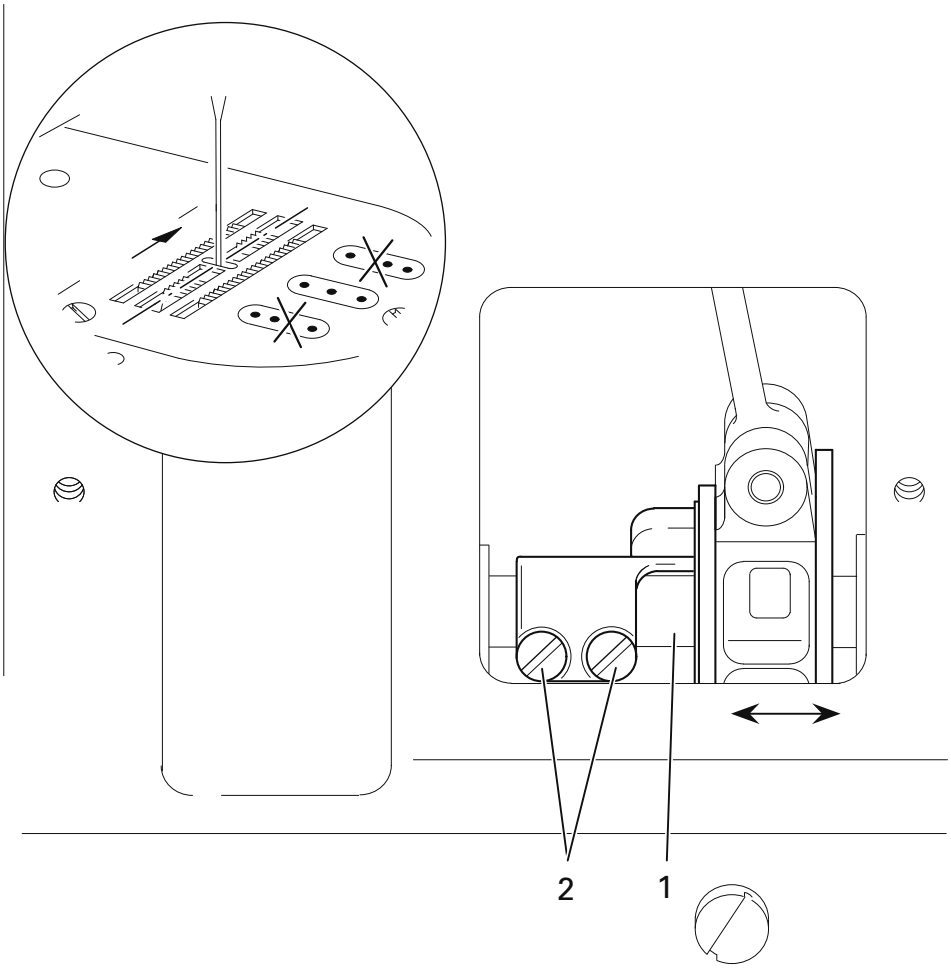

Fig. 1 - 11

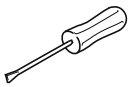

- Let the needle penetrate in the required zigzag settings using paper.
- Without twisting it adjust zigzag eccentric **1** (screws **2**) in accordance with the **requirement**.

1.05.11 Zigzag movement (only on the 939U)

Requirement
When the needle bar, moving from its right b.d.c., reaches its t.d.c. (hole **2),** it should not carry out any lateral motion when the zigzag stitch width lever **4** is moved to and fro.

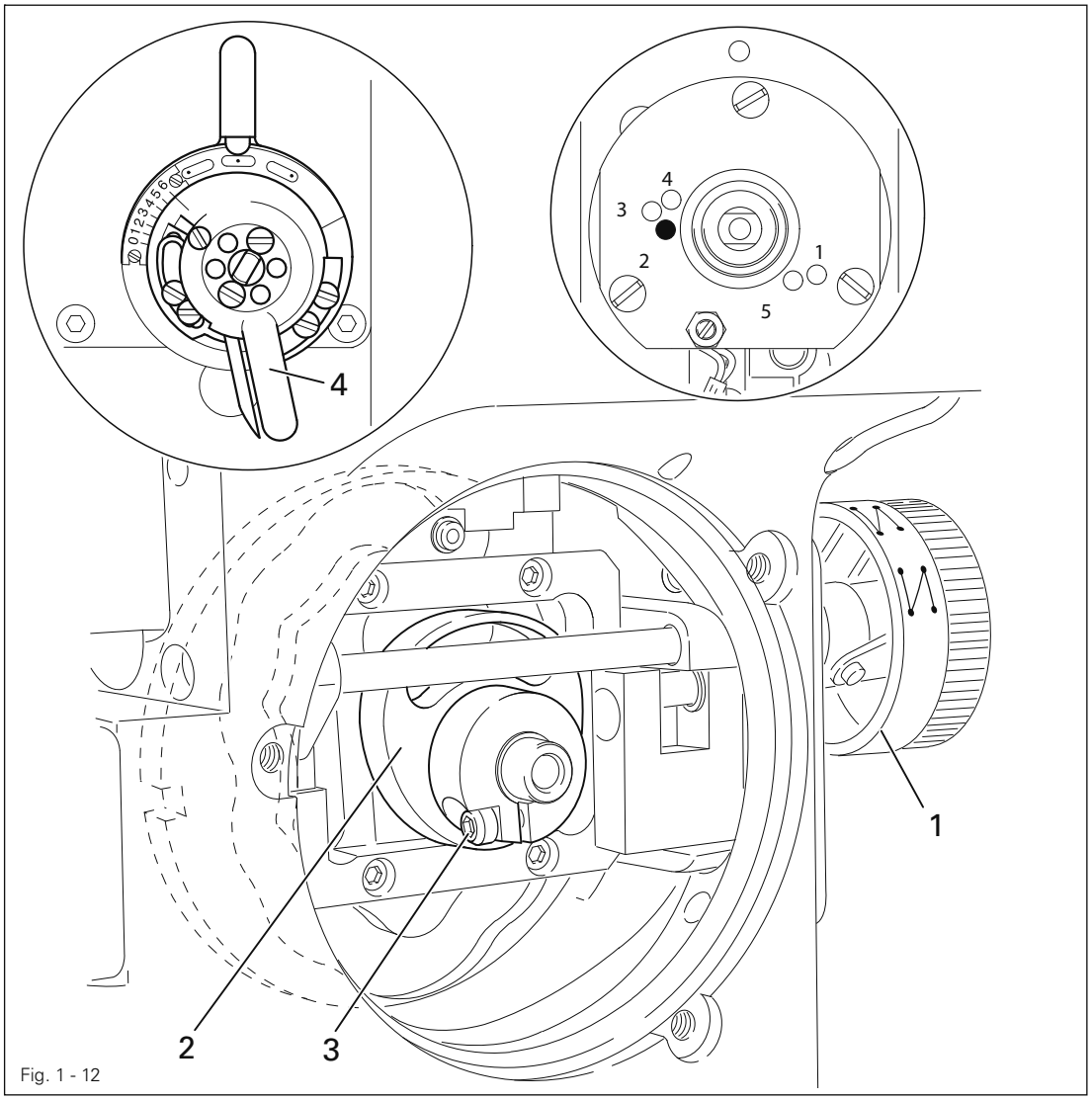

Fig. 1 - 12

- Set the adjustment wheel **1** at zigzag.
- Adjust the zigzag eccentric **2** (screw **3)** in accordance with the **requirement**.

1.05.12 Target positioning sensor (only on the 939U)

Requirement
There should be a clearance of **0.2 – 0.3 mm** between sensor **1** and control cam **3.**

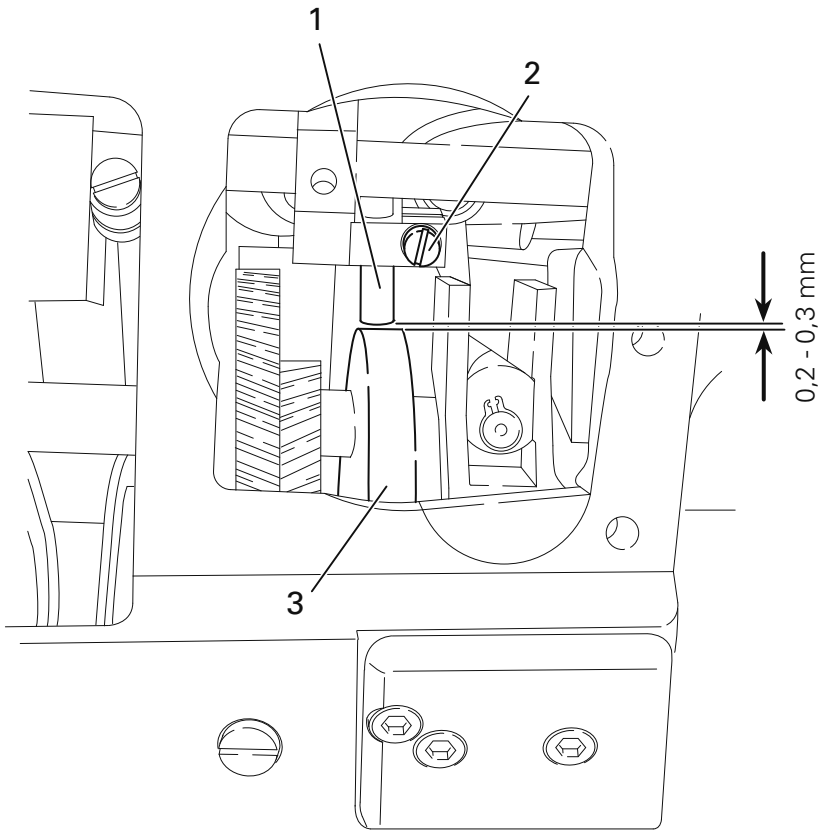

Fig. 1 - 13

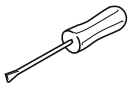

- Adjust sensor **1** (screws **2)** in accordance with the **requirement**.

1.05.13 Needle position adjustment lever

Requirement
The left and right throws of the needle must be the same size at the largest zigzag stitch setting and at the left or right needle position.

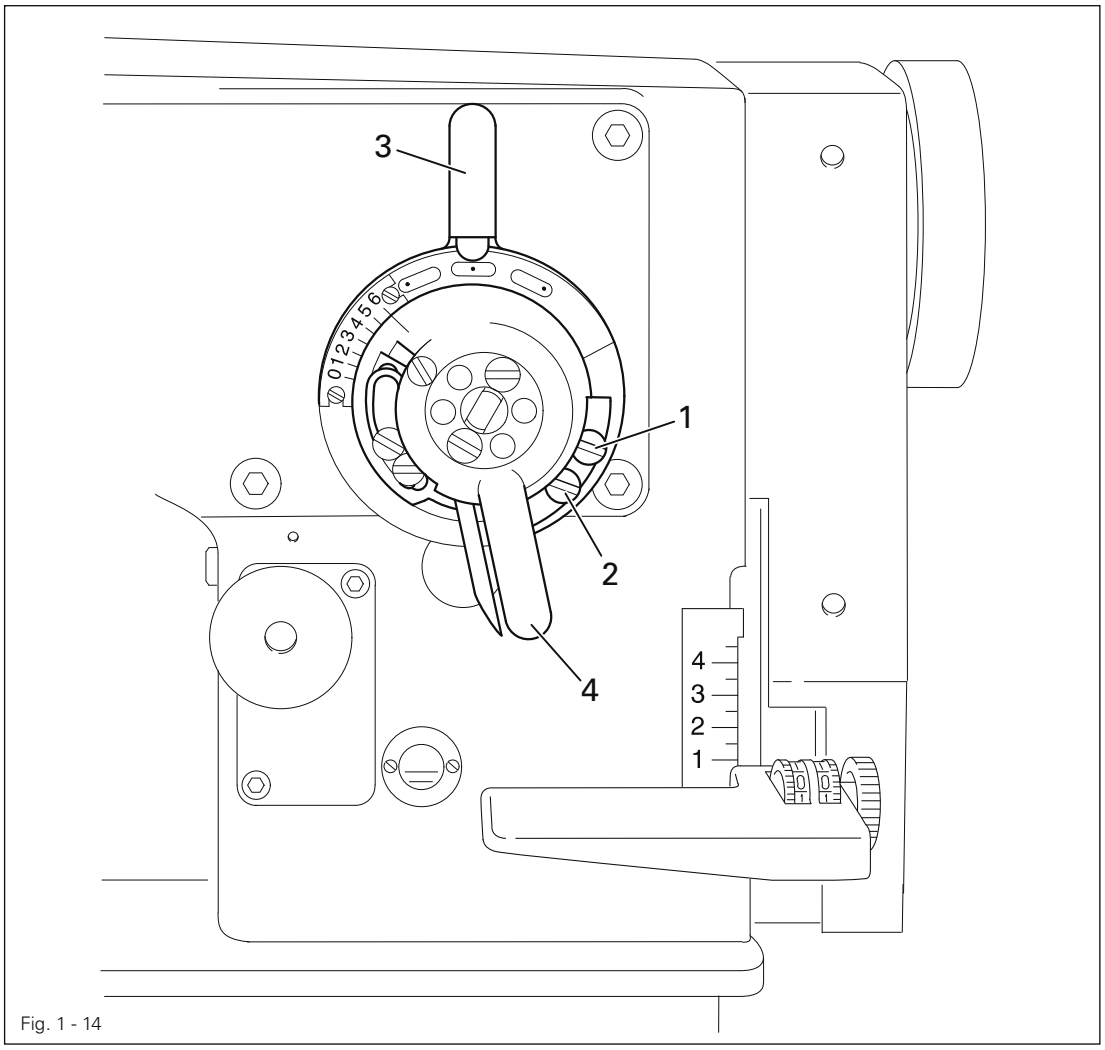

Fig. 1 - 14

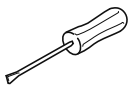

- Loosen screws **1** and **2.**
- Set the needle position adjustment lever **3** to "**middle**" and the zigzag stitch adjustment lever **4** at the largest zigzag stitch.
- Place a piece of paper underneath the presser foot and perforate it to the left and right with the needle.
- Set the zigzag stitch adjustment lever **4** at "**0**" and move the needle position adjustment lever **3** to the right/left until the needle is exactly over the perforations made in the last step.
- For the left needle-position bring screw **1** to a position where it touches and tighten it and for the right needle-position do the same with screw **2.**

1.05.14 Adjustment wheels for differential feed (only on the PFAFF 939U)

Requirement
With guide pin **3** in the middle of the connecting link and the ends of the toothed racks **4** flush with each other, the zero markings on the adjustment wheels **5** must be at marking **6.**

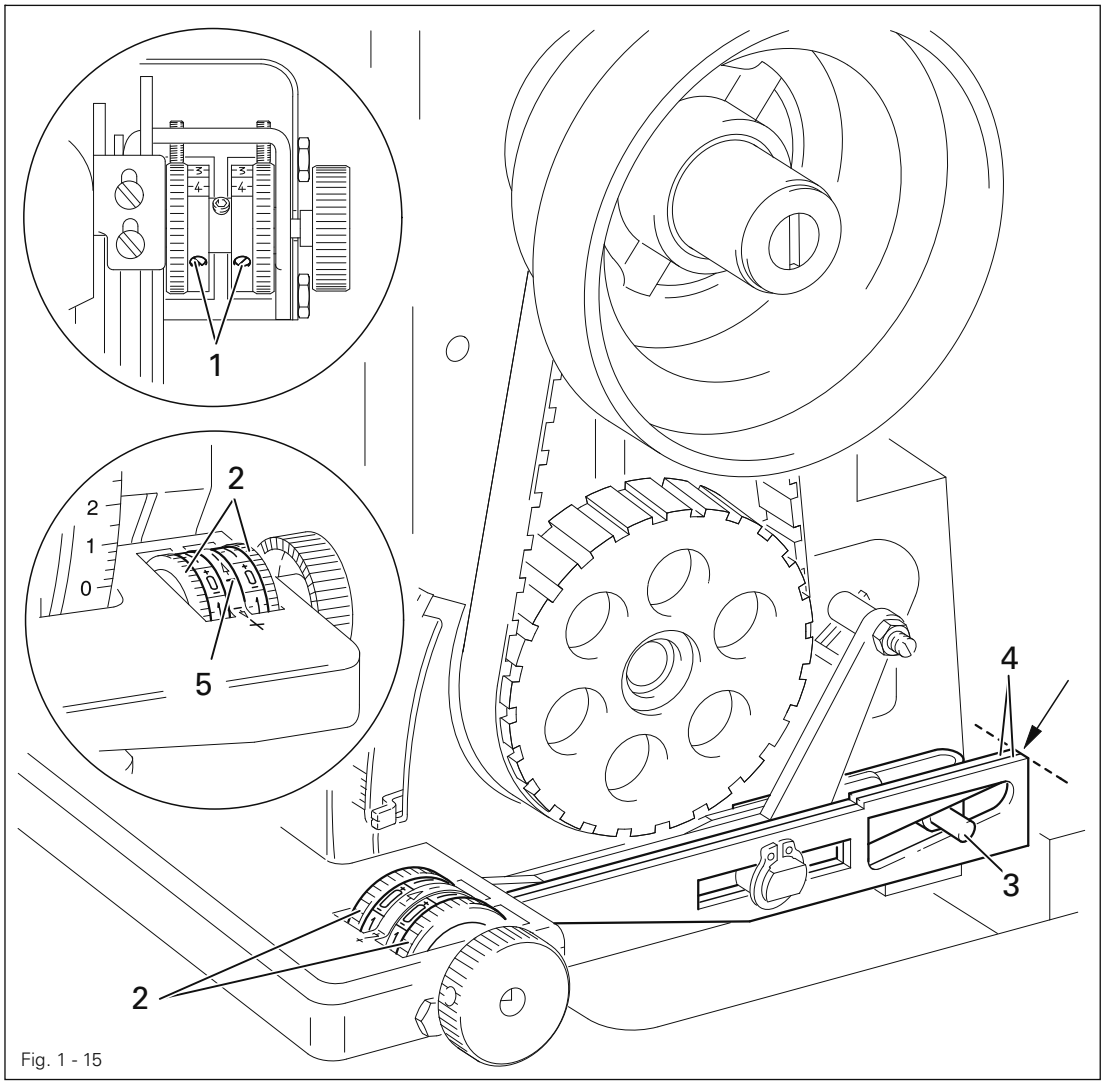

Fig. 1 - 15

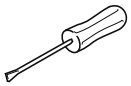

- Loosen screws **1.**
- Turn both adjustment wheels **2** until guide pin **3** is in the middle of the connecting link. The ends of the two toothed racks **4** must be flush with each other.
- Turn both scale rings in accordance with the **requirement** and tighten screws **1.**

1.05.15 Zeroing the differentiatio (only on the PFAFF 939 U)

Requirement
With the largest stitch length set, the reverse feed control key **12** should be set at its highest position. In addition the stop lug **11** of clamp crank **8** should be touching the top regulating shaft.

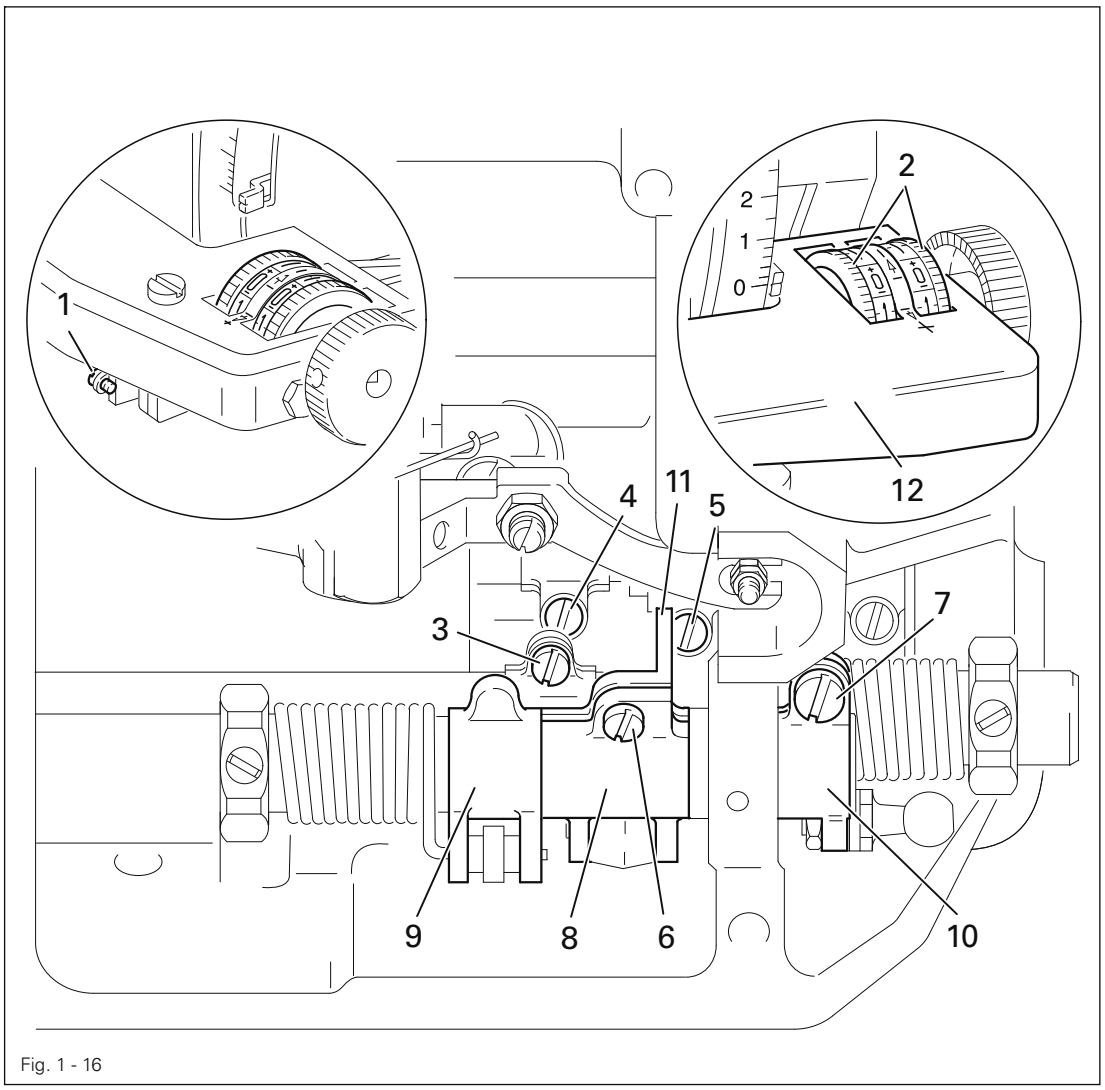

Fig. 1 - 16

- Unscrew screw **1** and the needle plate on machines with stitch length **N24.**
- Set both adjustment wheels **2** at "**0**".
- Loosen screws **3, 4, 5, 6** and **7.**
- Set the maximum stitch length and adjust clamp crank **8** in accordance with the **requirement**. Tighten screws **5** and **6.**
- Turn clamp crank **9** until it is parallel with clamp crank **8,** and tighten srews **3** and **4.**
- Turn clamp crank **10** so that it is parallel with the bedplate and tighten screws **7.**
- On machines with stitch length **N24,** tighten screw **1** and fit the needle plate.

1.05.16 Differential feed synchronisation (only on the PFAFF 3704-2/..)

Requirement
When the stitch length is set at "1.5" and both levers 1 are in the "0" position, the two feed dogs 5 should move the same distance when the balance wheel is turned.

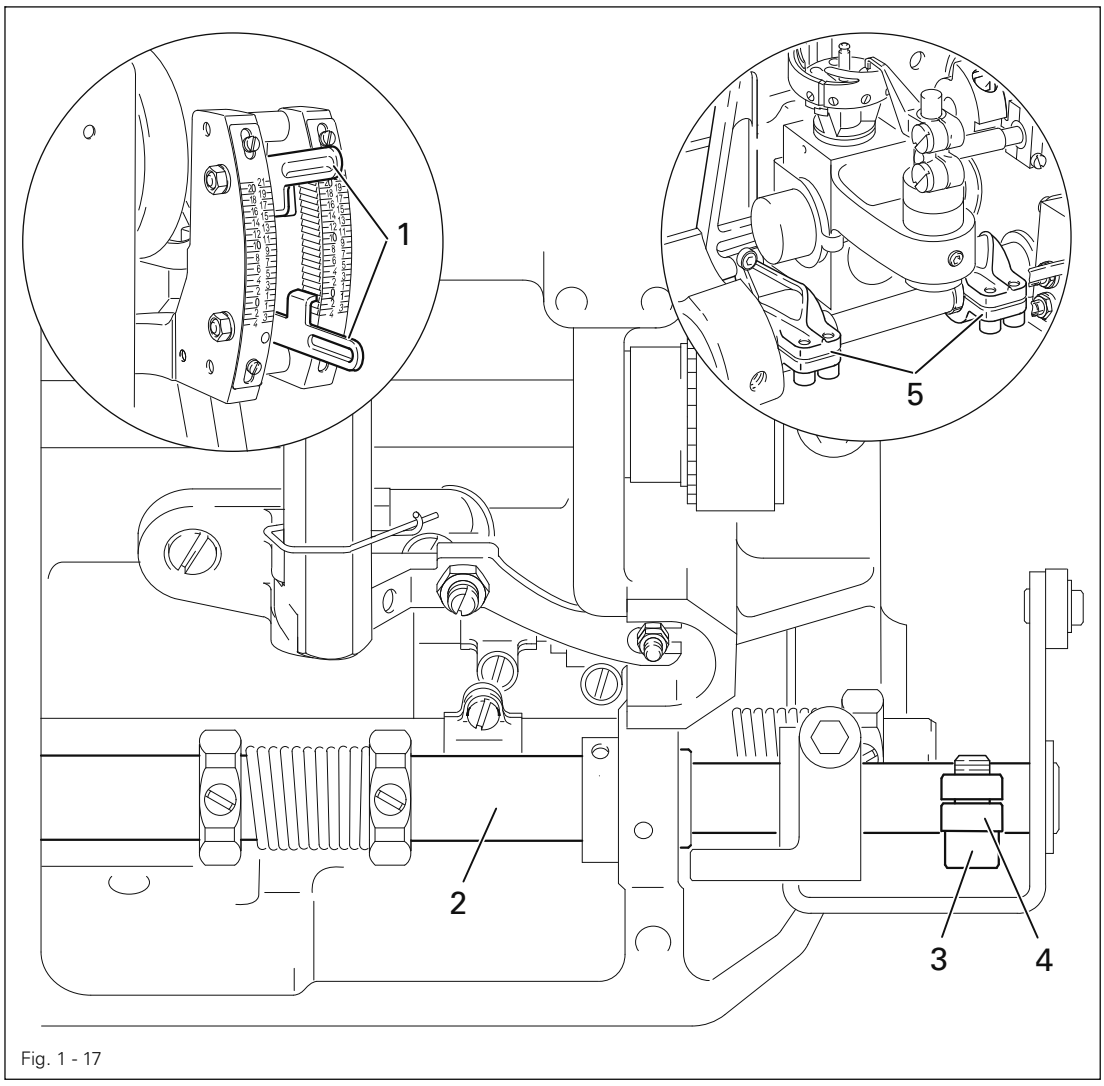

Fig. 1 - 17

- Set the stitch length at "**1.5**" and set both levers **1** at "**0**".
- While **2** (screw **3**) constantly turning the balance wheel, adjust shaft **3** in accordance with the **requirement**.
- Bring clamp crank **4** to its top position and tighten screw **3**.

1.05.17 Position of the stitch length adjustment wheel (on the PFAFF 939 U)

Requirement
When adjustment wheel **1** is turned as far forward as possible, the pointer **4** should be positioned exactly opposite the mark "**0**" on scale **5.**

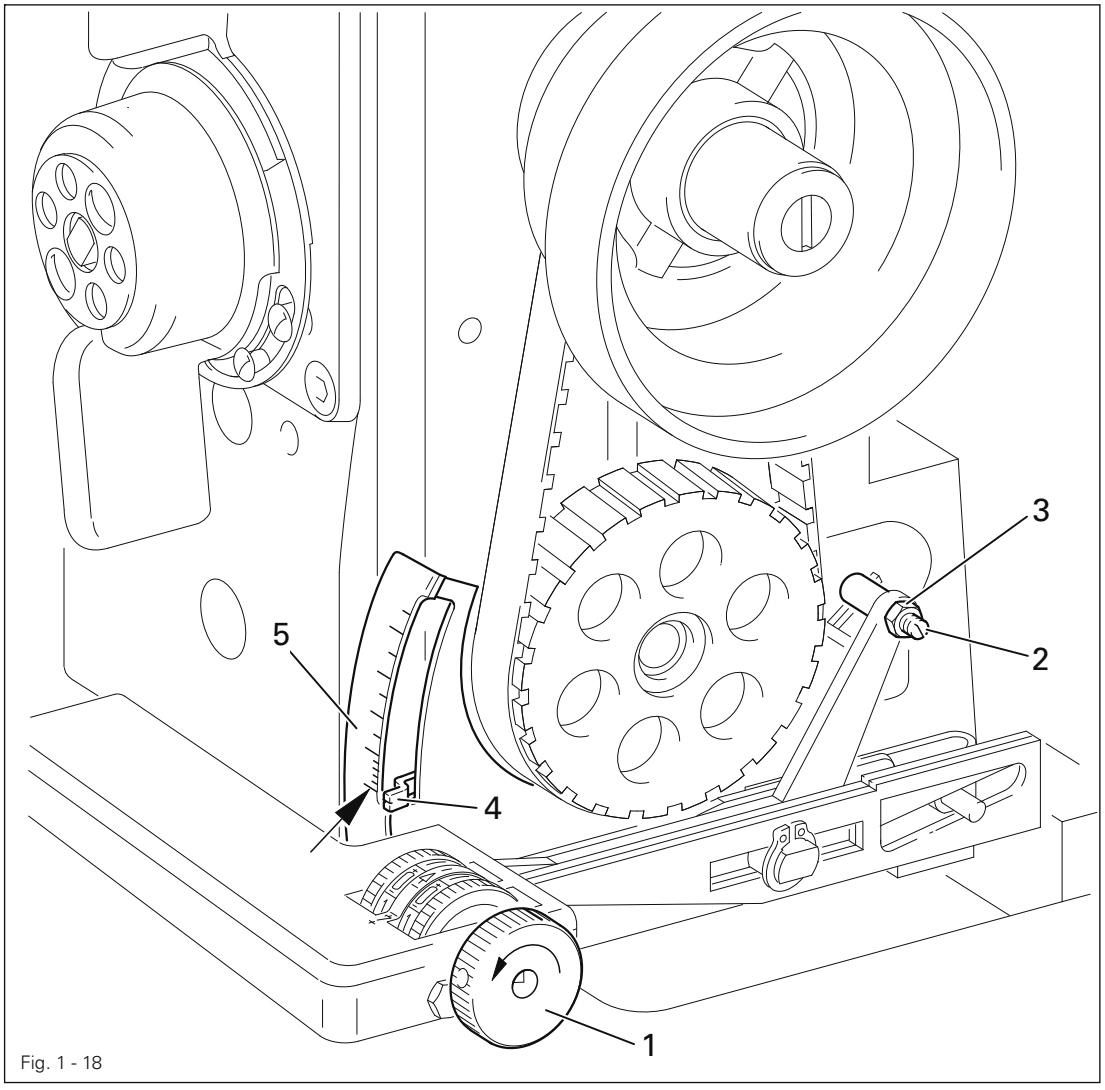

Fig. 1 - 18

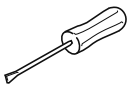

- Set the stitch length at "**0**" on the adjustment wheel **1.**
- Adjust eccentric **2** (nut **3)** in accordance with the **requirement**.

1.05.18 Position of the stitch length adjustment wheel (on the PFAFF 3704-2/..)

Requirement
When adjustment wheel **1** is turned as far forward as possible, the marking for "**0**" on adjustment wheel **1** and the marking on the reverse feed control should match.

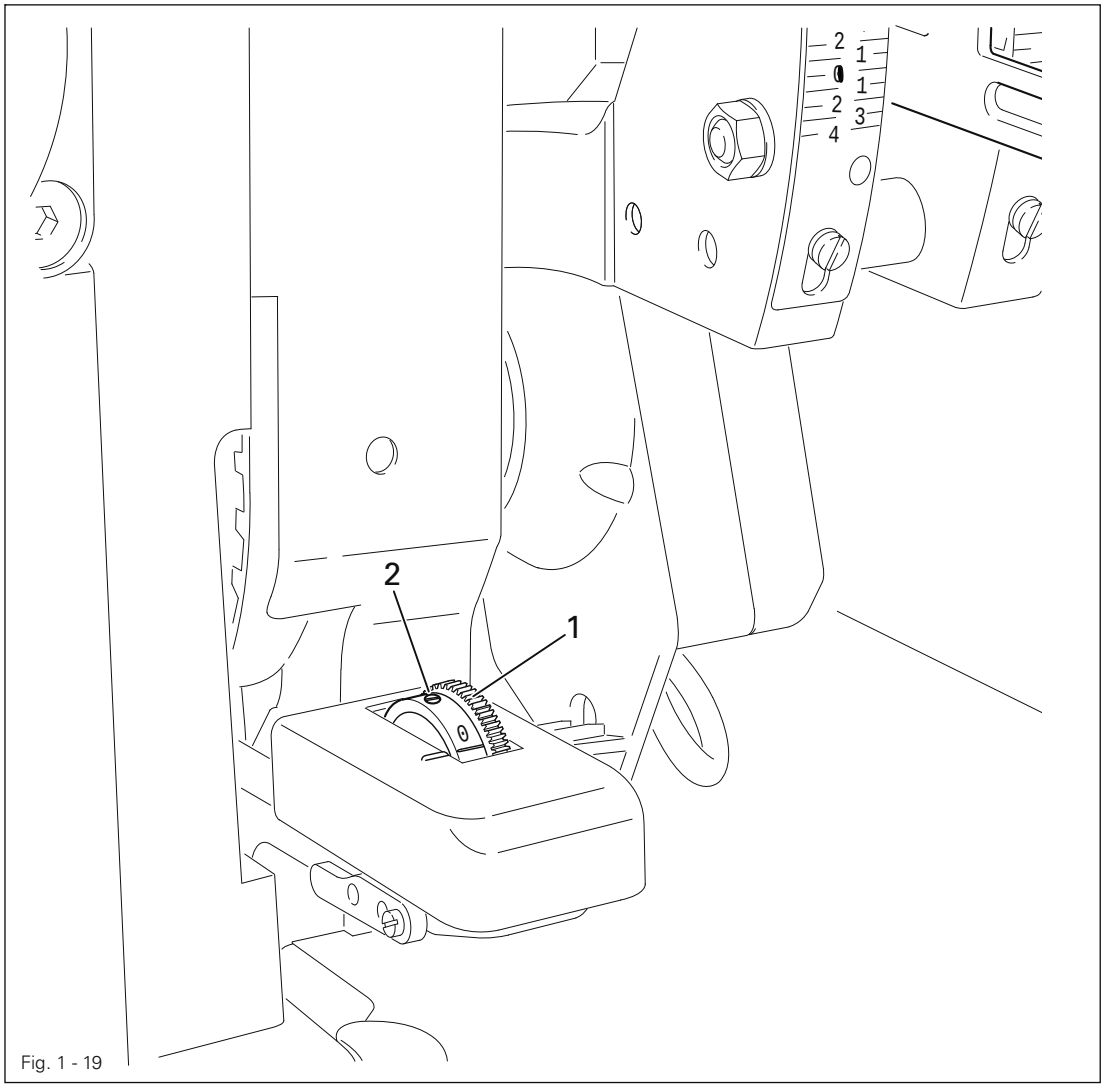

Fig. 1 - 19

- Adjust adjustment wheel **1** (screw **2)** in accordance with the **requirement**.

1.05.19 Zeroing the main feed (rear feed dog) on the PFAFF 939 U

Requirement
With the stitch length set at "0", when the balance wheel is turned, there should be no feeding motion of the rear feed dog.

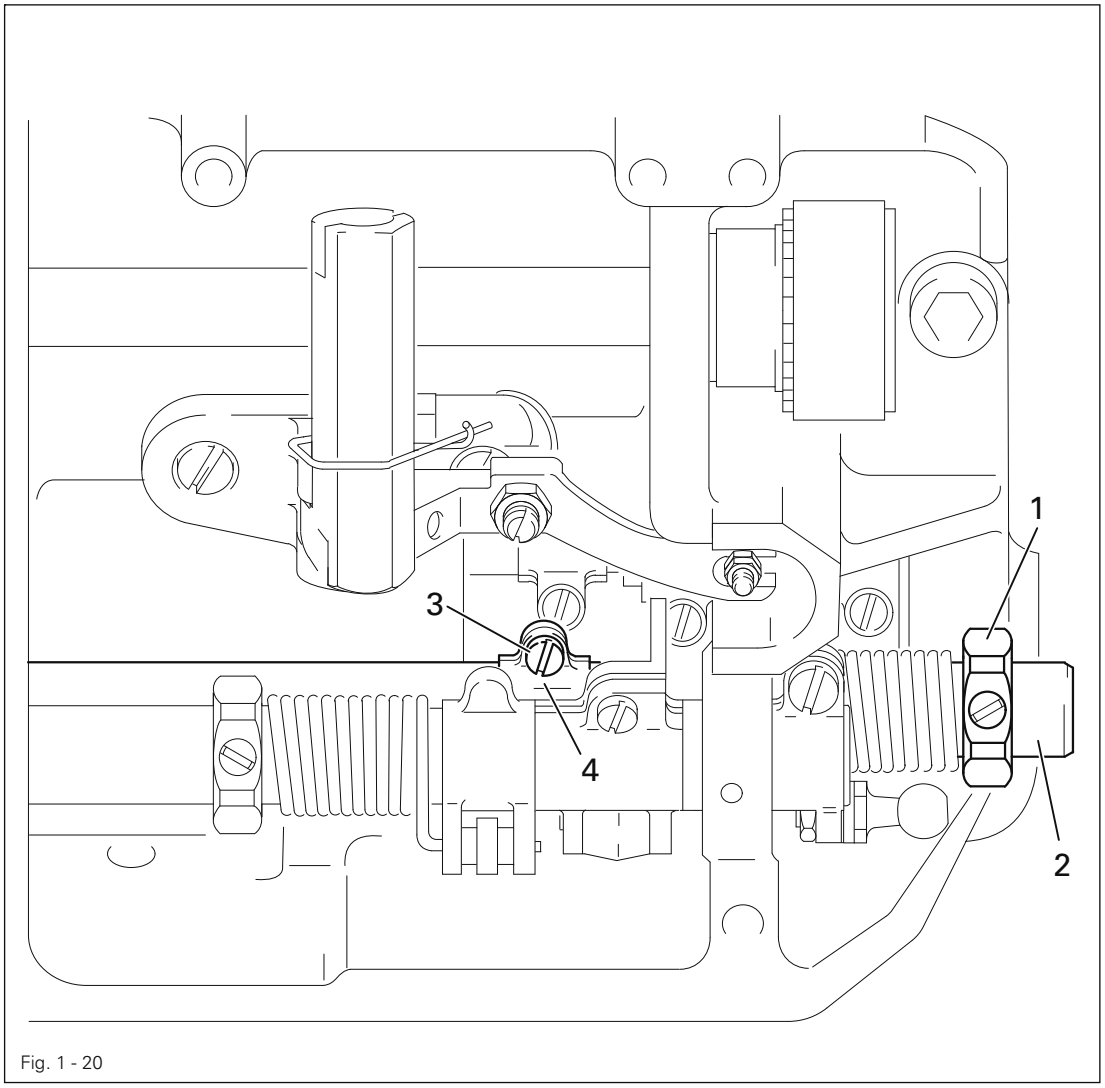

Fig. 1 - 20

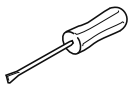

- Set the stitch length at "**0**".
- Fit the open-ended spanner (width **27**) to the torsion-spring collar **1** and use it to hold regulating shaft **2**.
- Loosen screw **3**.
- While constantly turning the balance wheel, adjust the spanner on the torsion-spring collar **1** in accordance with the **requirement**.
- In this position, move adjustment crank **4** against the cast iron frame and tighten screw **3**.
- Carry out a control in accordance with the **requirement**.

1.05.20 Zeroing the main feed (rear feed dog) on the PFAFF 3704-2/..

Requirement
With the stitch length set at "0", when the balance wheel is turned, there should be no feeding motion of the rear feed dog.

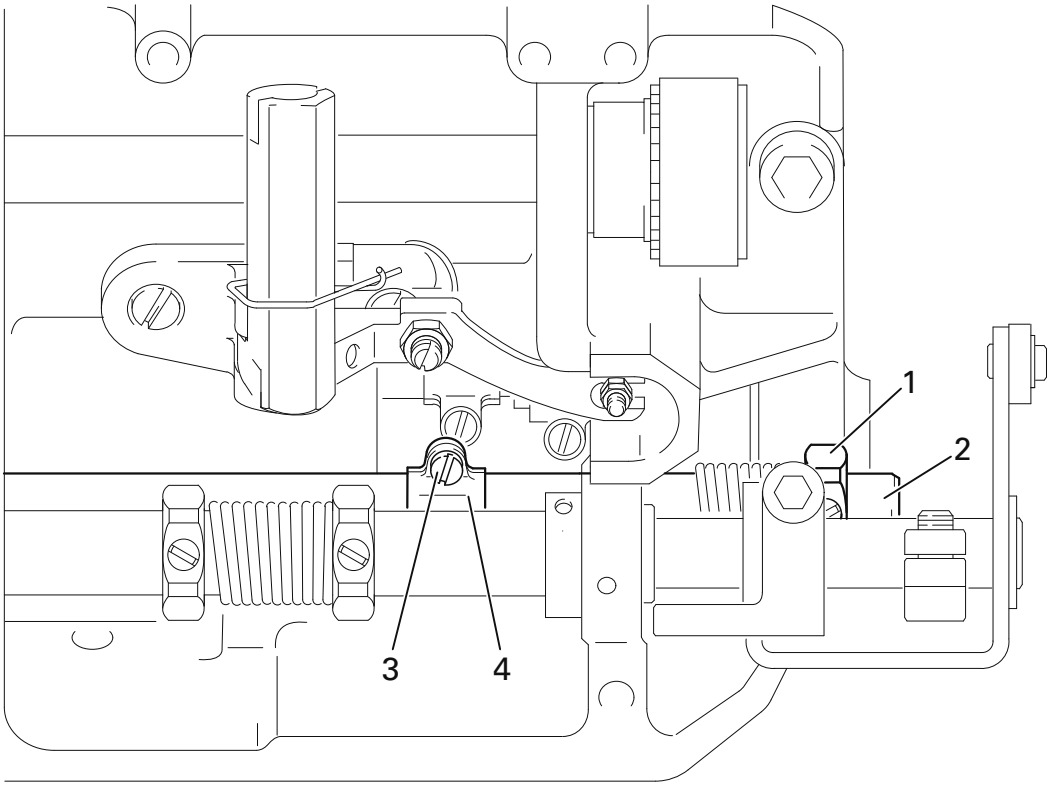

Fig. 1 - 21

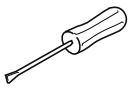

- Set the stitch length at "**0**".
- Fit the open-ended spanner (width **27**) to the torsion-spring collar **1** and use it to hold regulating shaft **2**.
- Loosen screw **3**.
- While constantly turning the balance wheel, adjust the spanner on the torsion-spring collar **1** in accordance with the **requirement**.
- In this position, move adjustment crank **4** against the cast iron frame and tighten screw **3**.
- Carry out a control in accordance with the **requirement**.

1.05.21 Zeroing the differential feed (front feed dog) on the PFAFF 939 U

Requirement
With the stitch length set at "**0**" and the adjustment wheels set at "**0**", when the balance wheel is turned, there should be no feeding motion of the differential feed dog **7**.

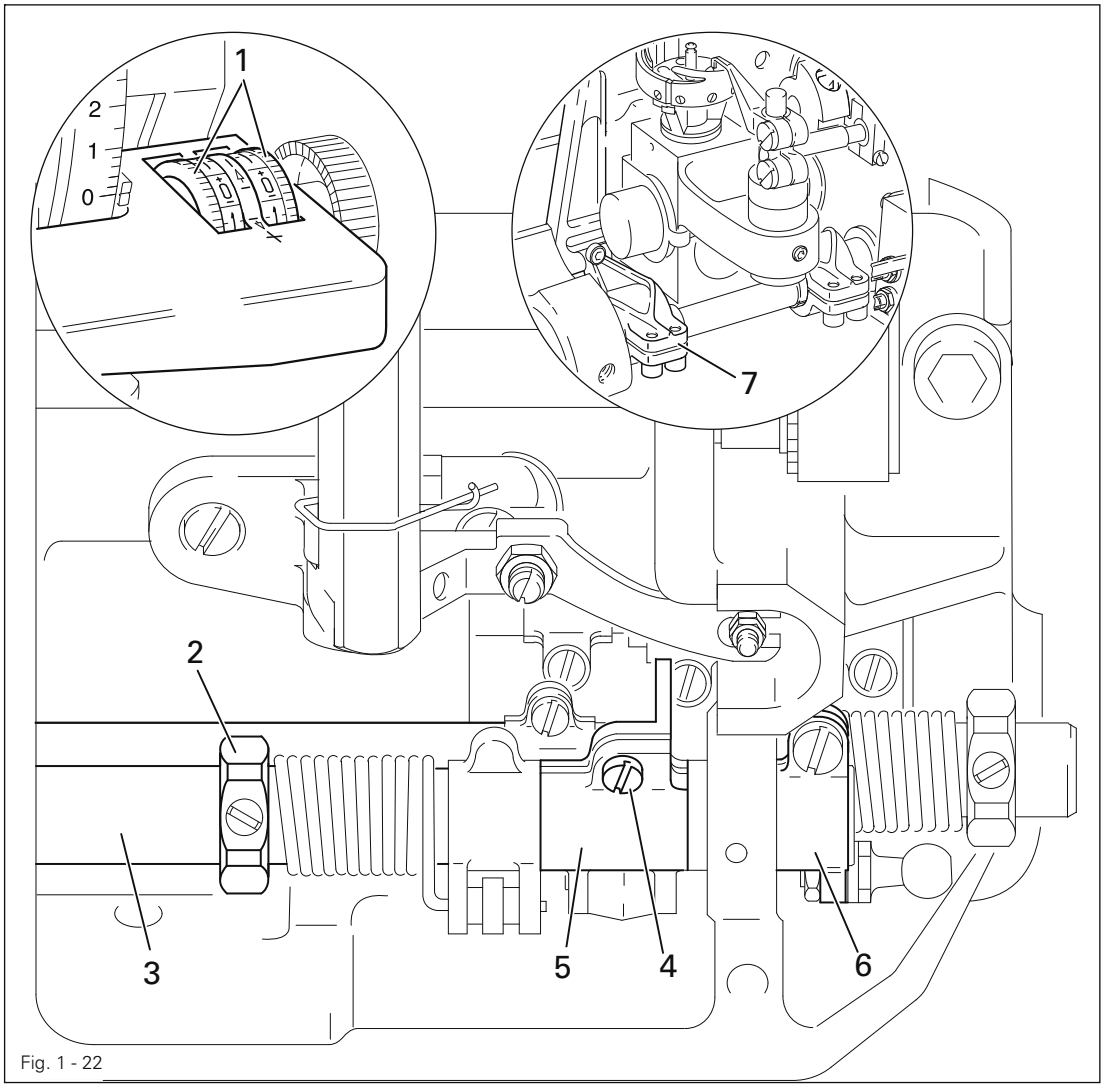

Fig. 1 - 22

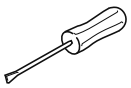

- Set the stitch length at "**0**".
- Set both adjustment wheels **1** at "**0**".
- Fit the open-ended spanner (width **27**) to the torsion-spring collar **2** and use it to hold regulating shaft **3**.
- Loosen screw **4**.
- While constantly turning the balance wheel, adjust the spanner on the torsion-spring collar **2** in accordance with the **requirement**.
- In this position, move adjustment crank **5** and crank **6** against the cast iron frame and tighten screw **4**.
- Carry out a control in accordance with the **requirement**.

1.05.22 Zeroing the differential feed (front feed dog) on the PFAFF 3704-2/..

Requirement
When the stitch length is set at "**0**" and both levers **1** set at the "**0**" position, the differential feed dog **4** should not make any feeding movement when the balance wheel is turned.

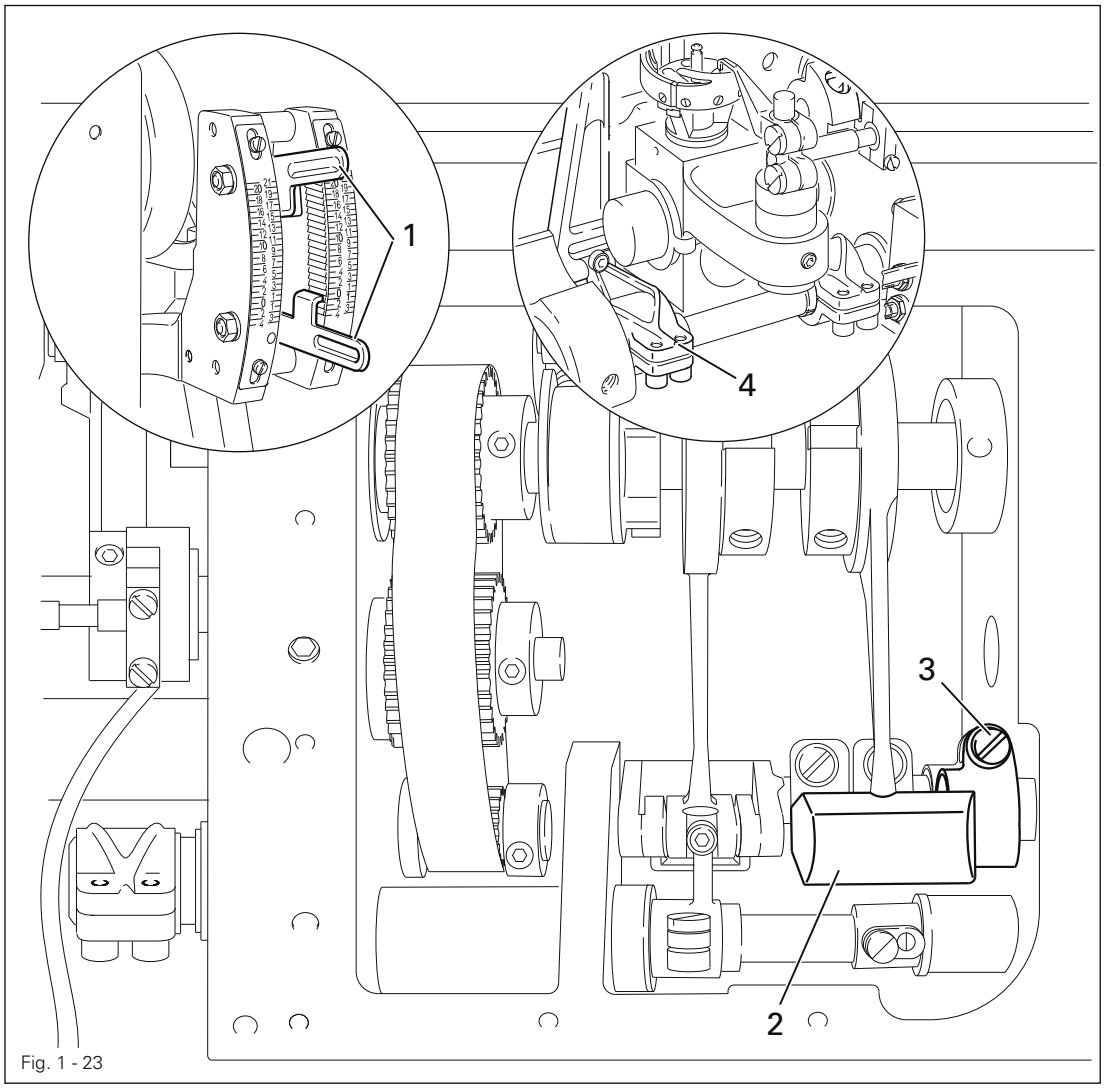

Fig. 1 - 23

- Set the stitch length at "**0**".
- Set both levers **1** at "**0**".
- While constantly turning the balance wheel, adjust crank **2** (screw **3**) in accordance with the **requirement**.
- Carry out a control check in accordance with the **requirement**.

1.05.23 Torsion spring of the reverse feed lever (on the PFAFF 939 U)

Requirement
With the presser foot raised, the longest stitch length set and the adjustment wheels **4** at "**0**", the reverse feed lever **5** must return automatically to its uppermost point after being activated.

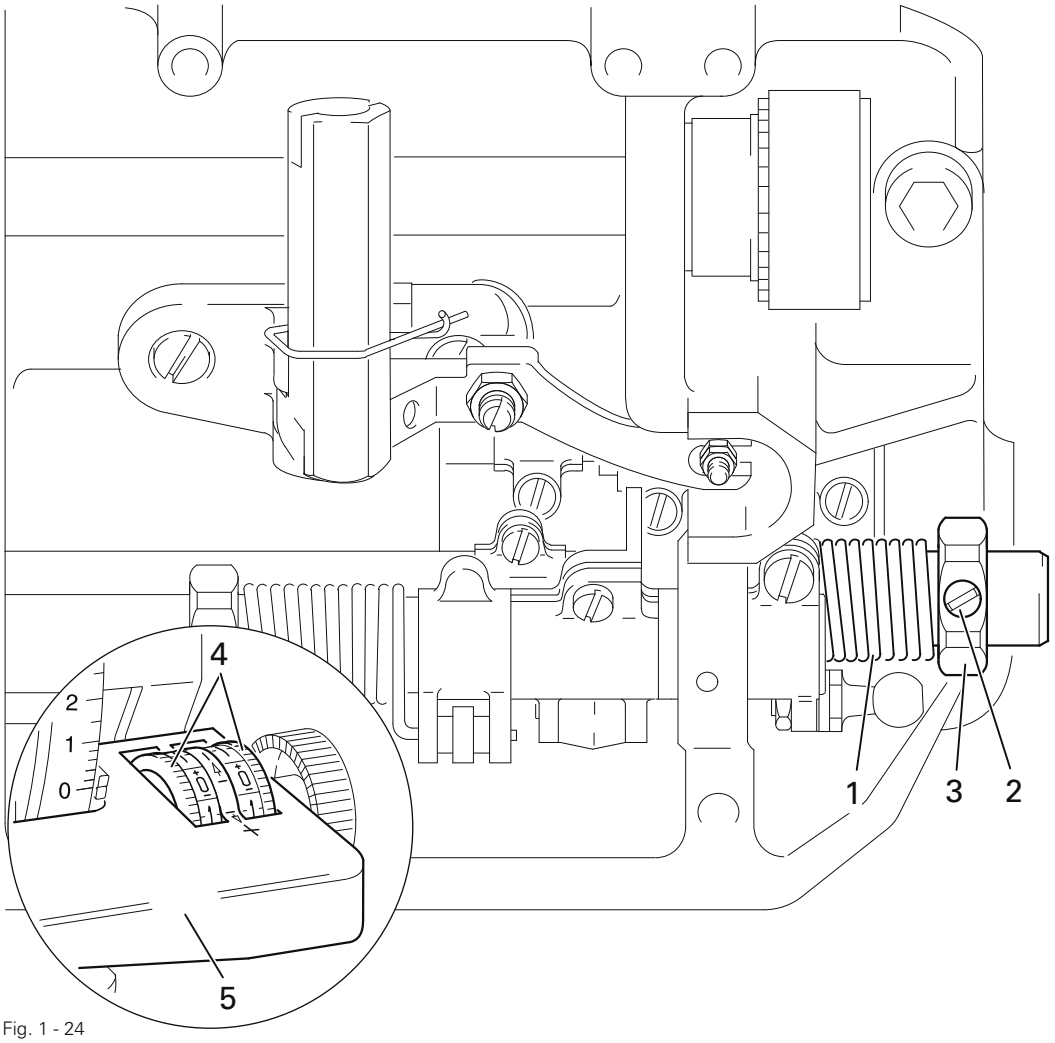

Fig. 1 - 24

- Turn torsion spring **1** (screw **2**) in accordance with the **requirement** using nut **3.**

1.05.24 Torsion spring of the reverse feed lever (on the PFAFF 3704-2/..)

Requirement
With the presser foot raised, the longest stitch length set and the adjustment lever **4** at "**0**", the reverse feed lever **5** must return automatically to its uppermost point after being activated.

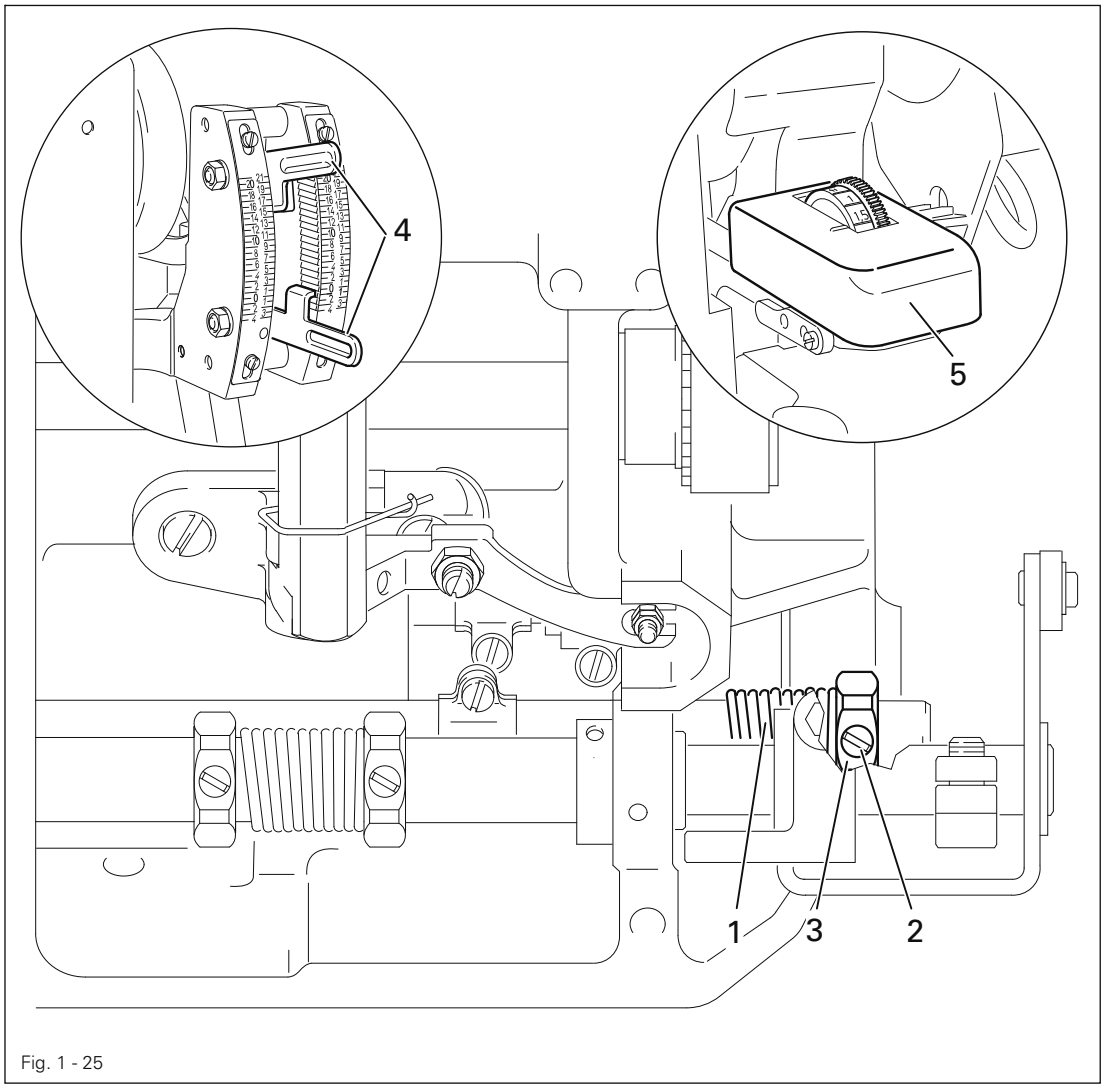

Fig. 1 - 25

- Turn torsion spring **1** (screw **2**) in accordance with the **requirement** using nut **3.**

1.05.25 Torsion spring of the differentiation regulating shaft (on the PFAFF 939 U)

Requirement
With the presser foot raised, the stitch length set at "**0**", adjustment wheel **4** at **+ 4.5** and adjustment wheel **5** at "**0**", guide pin 6 must be touching in connecting link **7**.

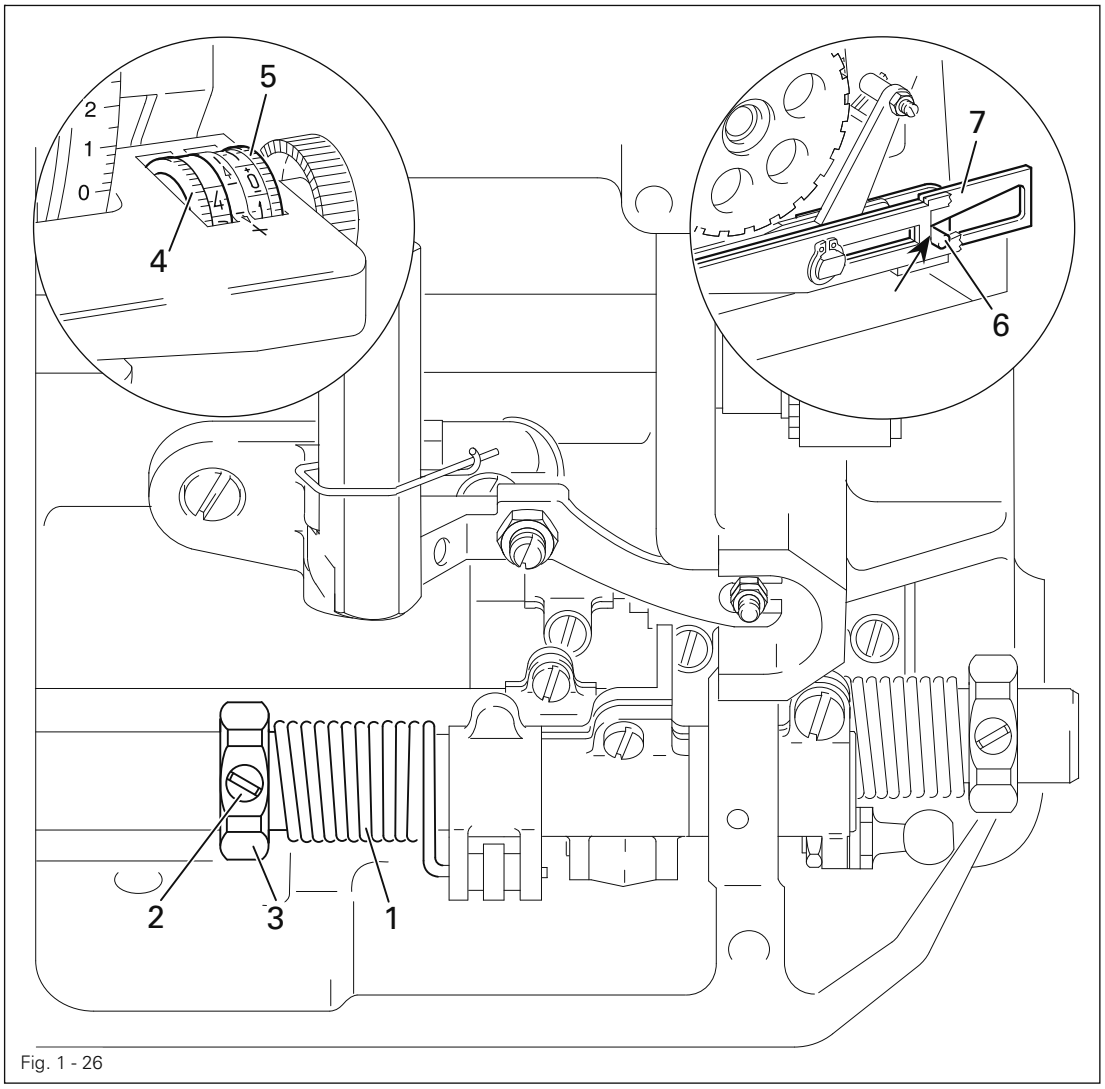

Fig. 1 - 26

- Turn torsion spring **1** (screw **2**) in accordance with the **requirement** using nut **3.**

1.05.26 Torsion spring of the differentiation regulating shaft (on the PFAFF 3704-2/..)

Requirement
When the presser foot is raised, the maximum stitch length set, lever **4** raised to its top position and lever **5** set at "**0**", the pointer **6** should be touching lever **4.**

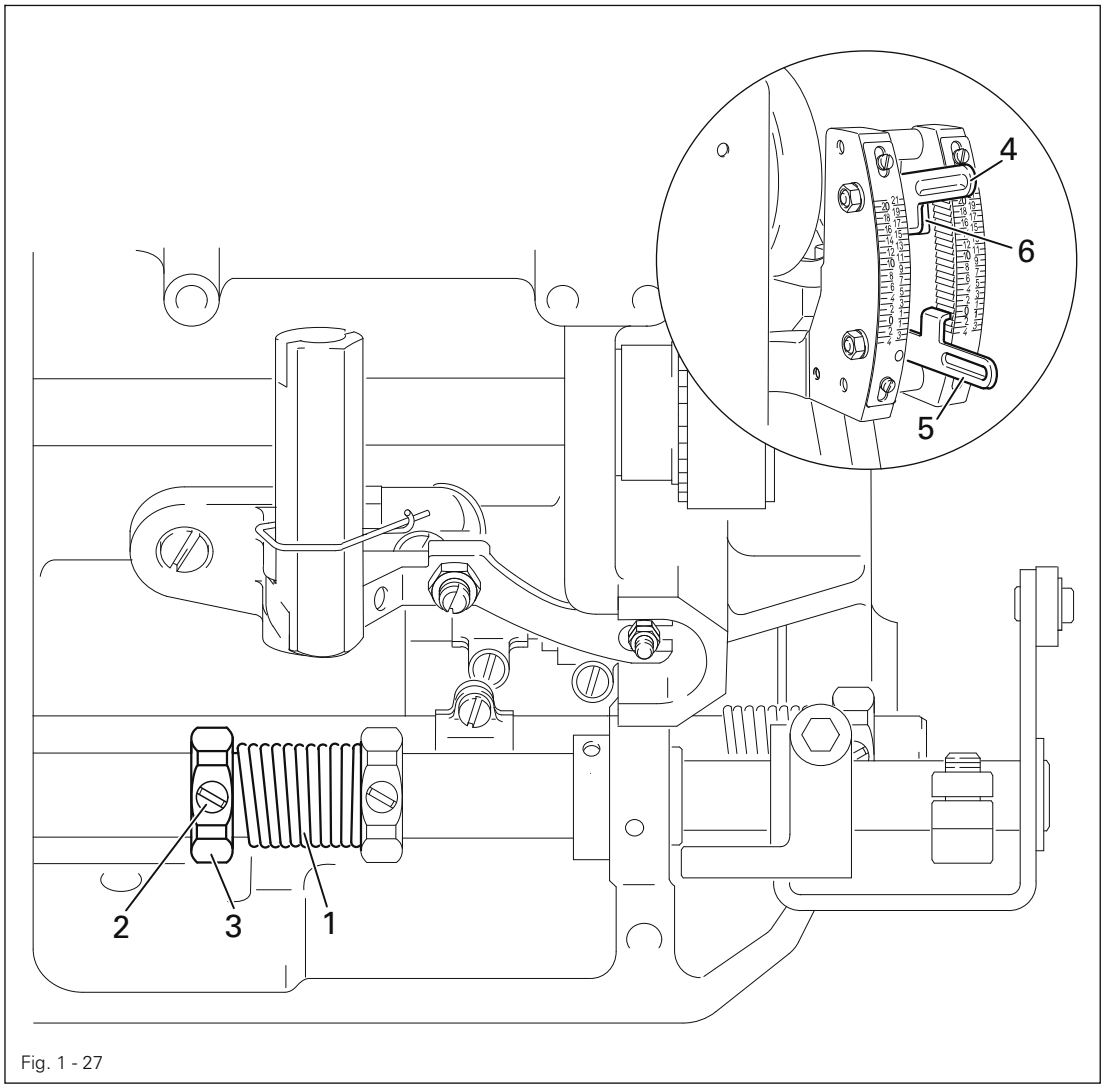

Fig. 1 - 27

- Turn torsion spring **1** (screw **2)** in accordance with the **requirement** using nut **3.**

1.05.27 Feeding motion of the main and differential feeds

Requirement
With the maximum stitch length set and the needle bar positioned **1.0** after t.d.c. (hole **4)**, when the reverse stitch key is operated, there should be no feeding motion of the main and differential feed dogs.

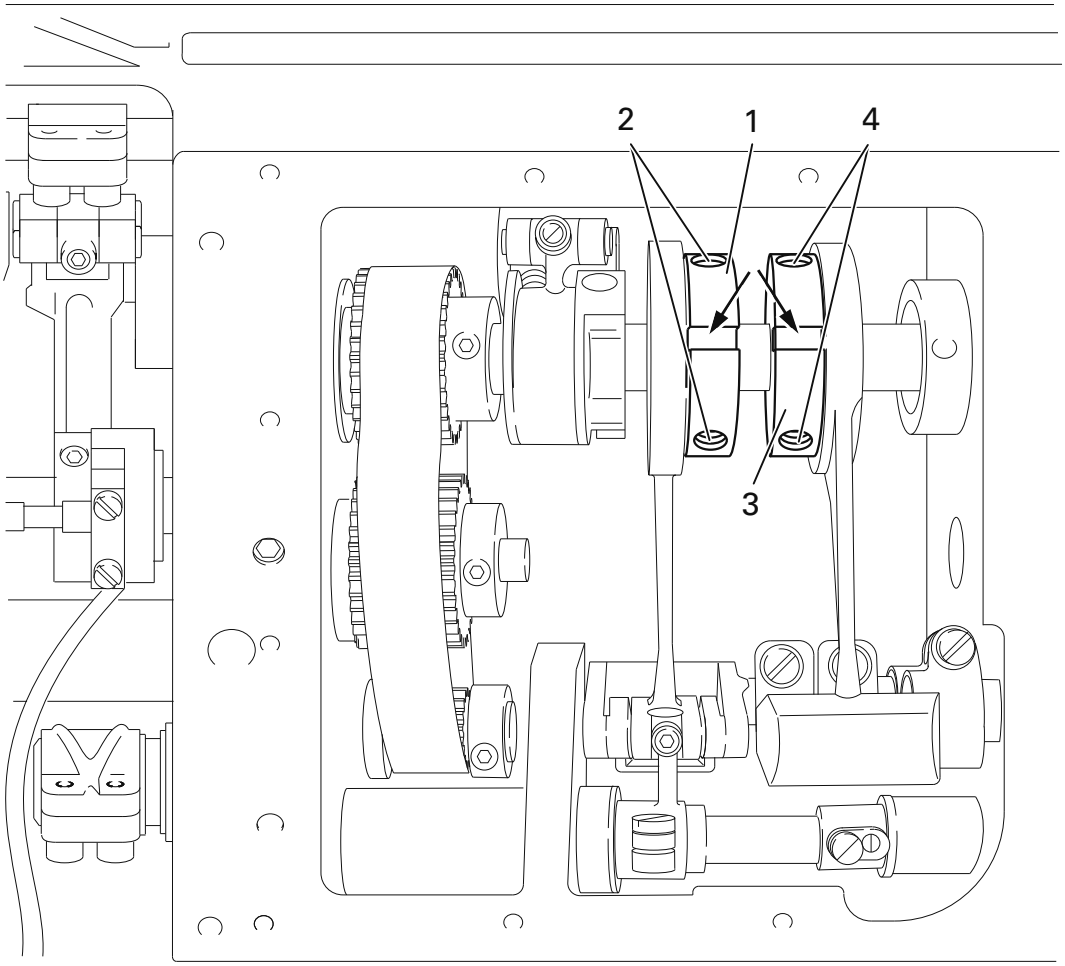

Fig. 1 - 28

- While constantly operating the reverse stitch key, adjust the main feeding eccentric **1** (screws **2)** in accordance with the **requirement** (the cutout on feeding eccentric **1** must be visible).
- While constantly operating the reverse stitch key, adjust the differential feeding
- eccentric **3** (screws **4)** in accordance with the **requirement** (the cutout on feeding eccentric **3** must be visible).

Eccentric **1** and **2** should not be axially displaced.

1.05.28 Lifting stroke of the main and differential feed dogs

Requirement
With the stitch length set at "**0**" and the needle bar positioned at **0.25** after t.d.c. (hole **3**), the feed dogs should be at the top of their stroke.

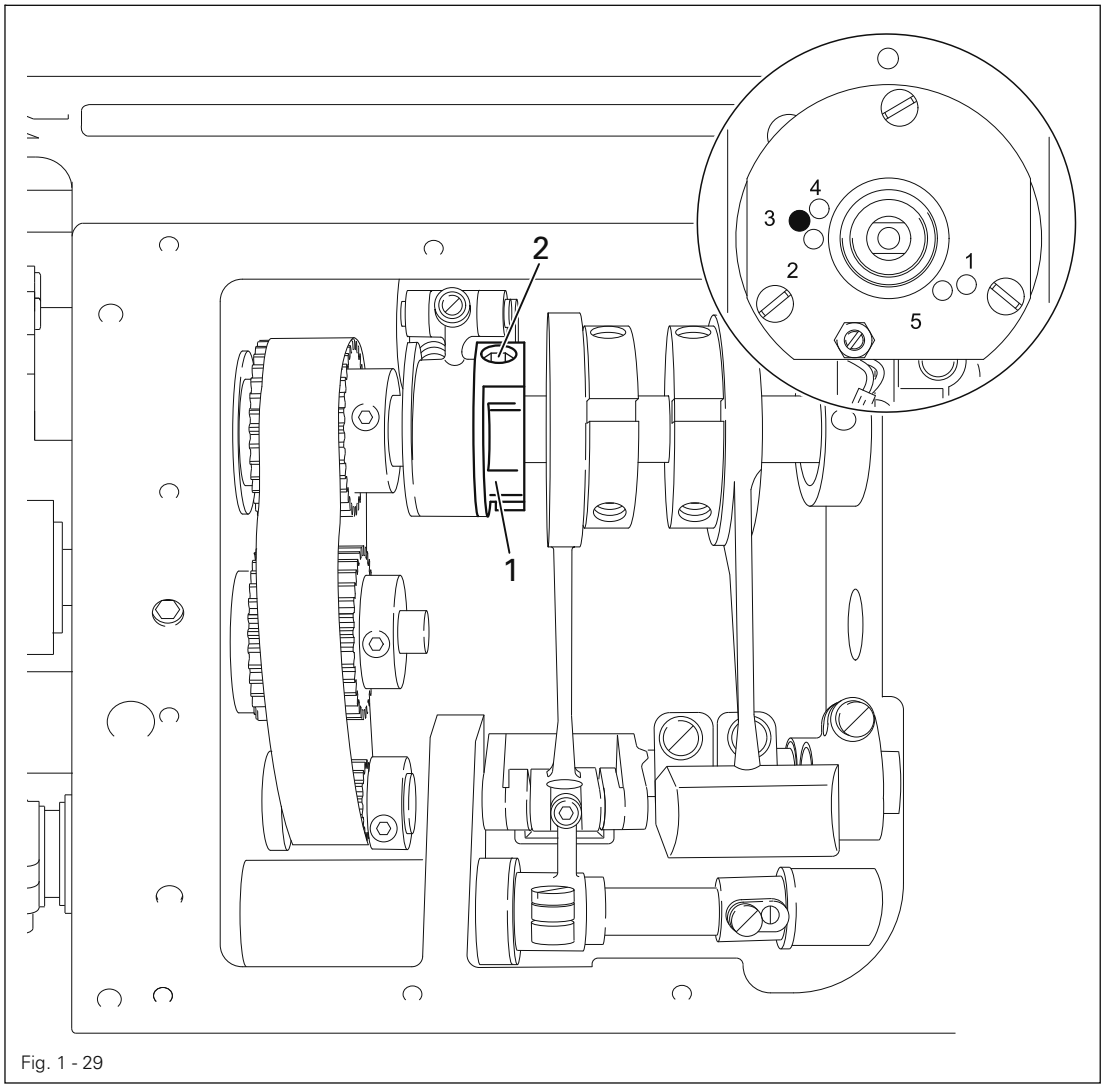

Fig. 1 - 29

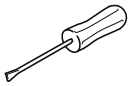

- Adjust eccentric **1** (screws **2**) in accordance with the **requirement**.

Eccentric **1** should not be axially displaced.

1.05.29 Height of the main and differential feed dogs

Requirement

With the stitch length set at "0" and the needle bar positioned at 0.25 after t.d.c. (hole 3):

1. The feed dogs should be in the centre of the needle plate cutout and be touching the feed dog height adjustment gauge over their whole length.
2. There should be a distance of approx. **4 mm** between the feed dogs.

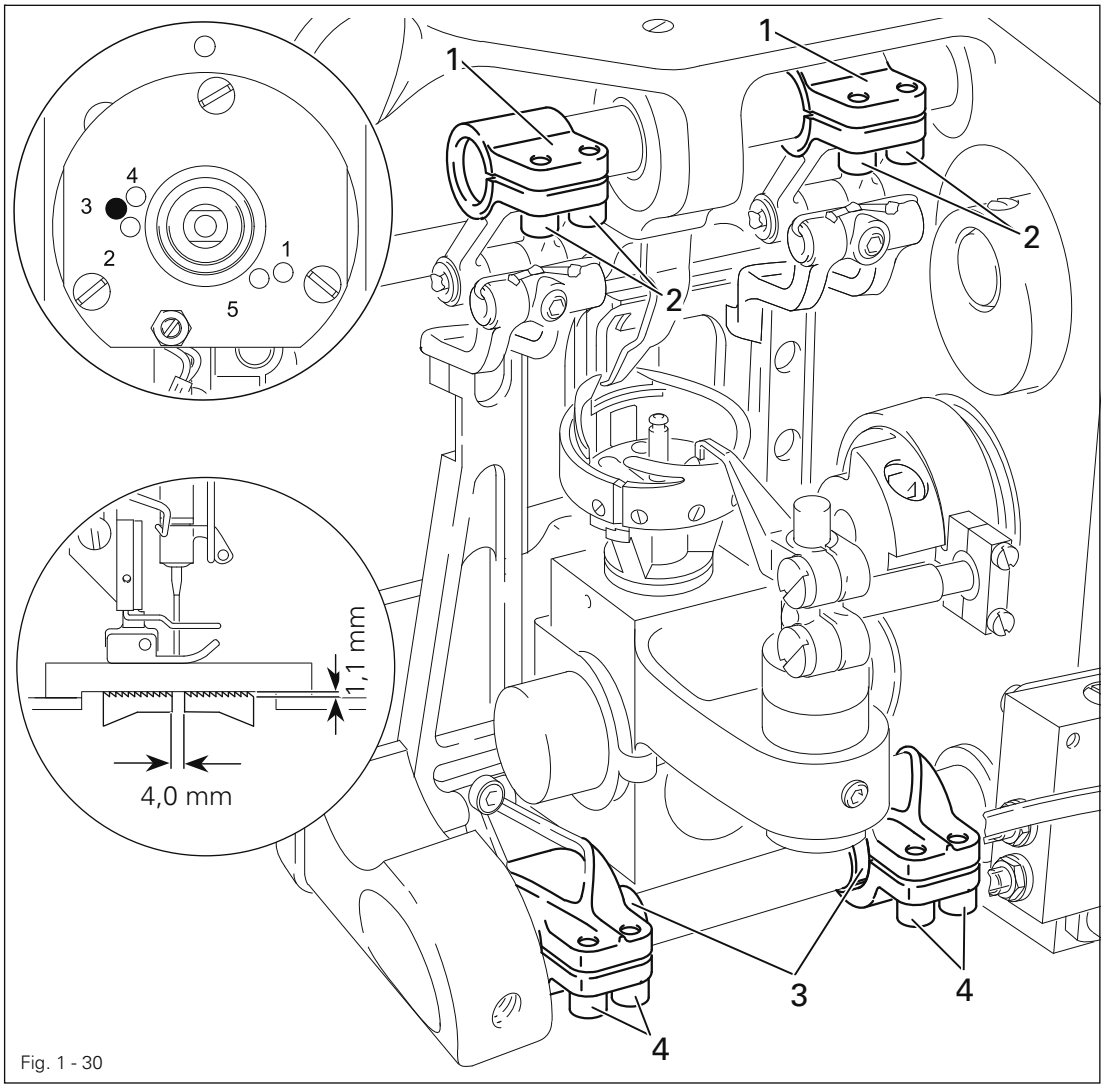

Fig. 1 - 30

- lace the feed dog adjustment gauge under the sewing foot with the cutout facing down.
- Lower the sewing foot until it touches the gauge.
- Press up both feed bars and adjust the feed dogs in accordance with **requirement 2.**
- Adjust lifting cranks **1** (screws **2**) and eccentric clamp bushings **3** (screws **4**) in accordance with **requirement 1.**

1.05.30 Drive belt in the gearbox housing

Requirement
Drive belt 4 must be tightened so that the machine runs freely and the belt sprockets do not have any noticeable play.

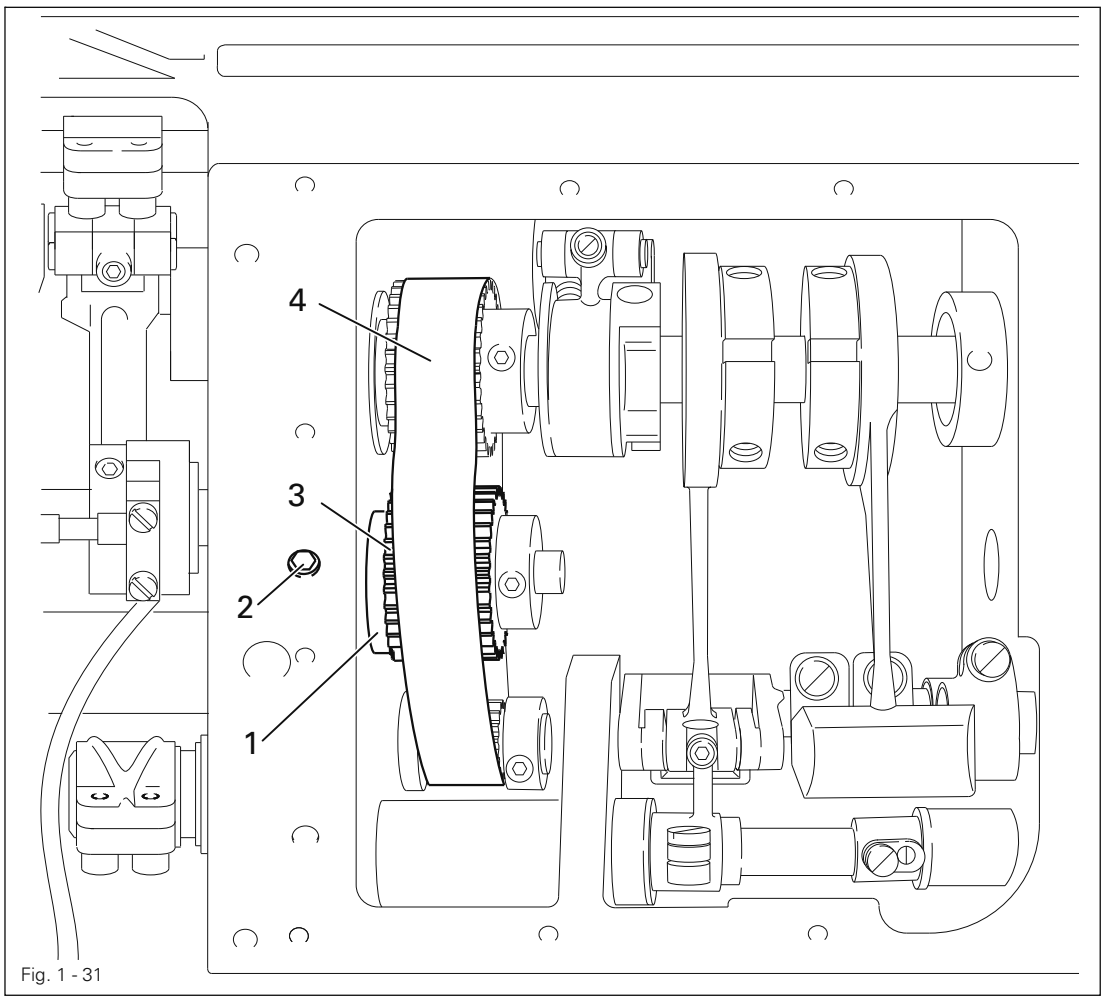

Fig. 1 - 31

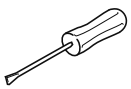

- Adjust eccentric bearing bush **1** (screw **2**) in accordance with the **requirement** and so that drive belt **4** is in the centre of bobbin opener drive wheel **3.**

1.05.31 Hook bearing bracket

Requirement
The hook shaft must be touching the hook bearing bracket adjustment gauge **1** at the top and the side.

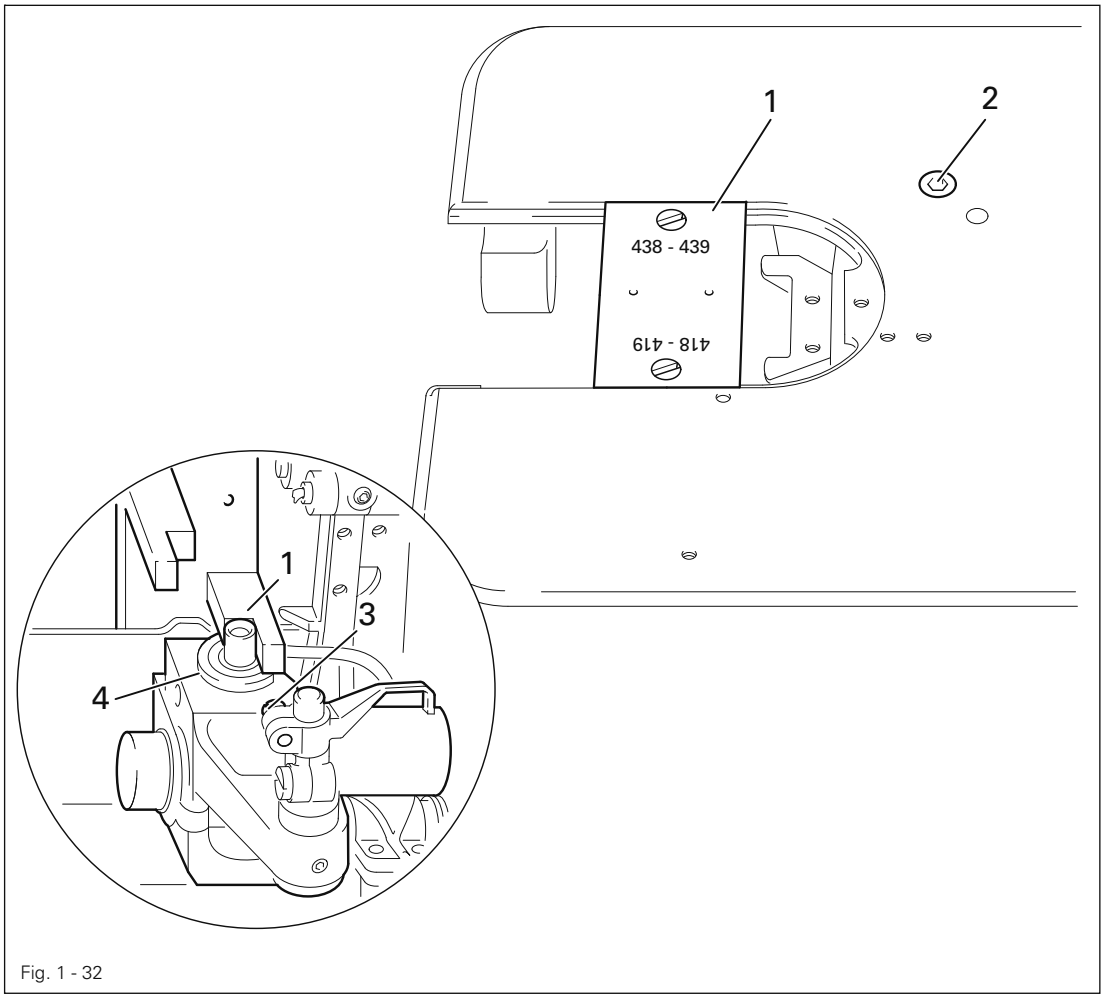

Fig. 1 - 32

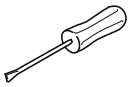

- Loosen screw **3.**
- Swing the bobbin case opener to the right and remove the hook.
- Loosen screw **2** and loosen the draw key underneath it by lightly tapping the head of the screw.
- Screw on the hook bearing bracket adjustment gauge.
- It must be possible to read the numbers "**438-439**" from the front.
- Move or turn hook bearing bracket **4** in accordance with the **requirement**.
- Tighten screw **2.**
- Adjust the bobbin case opener in accordance with subsection **1.05.36** Bobbin case opener position.

1.05.32 Hook lubrication

Requirement
When the machine is running at full speed, after about **10** seconds a fine oil streak should be visible on a strip of paper held over the needle plate cutout.

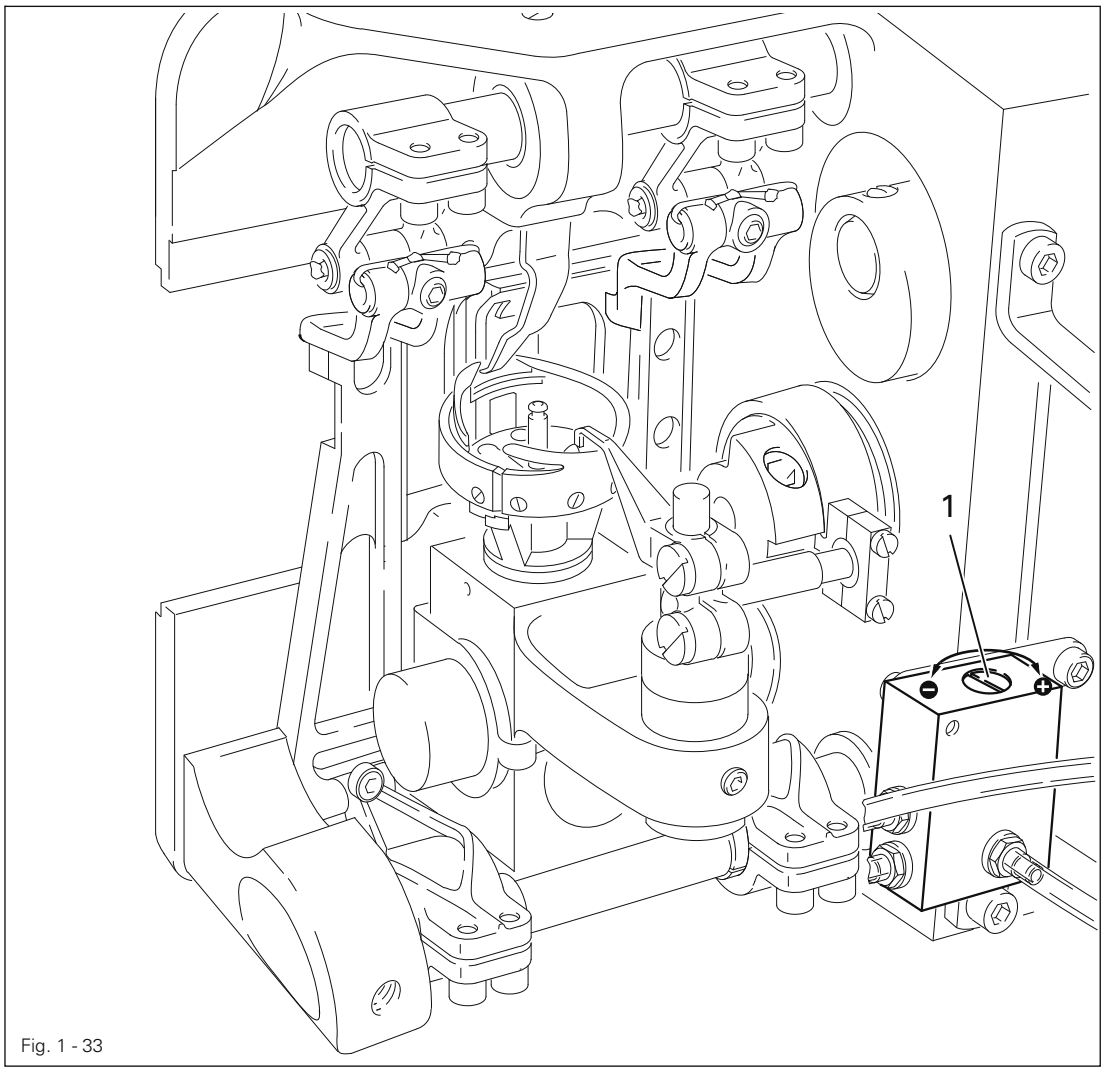

Fig. 1 - 33

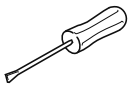

- Adjust screw **1** in accordance with the **requirement**.

1.05.33 Pre-adjusting the needle height

Requirement
With the needle bar at tdc (hole **2)** the distance between the point of the needle and the needle plate must be **19 mm**.

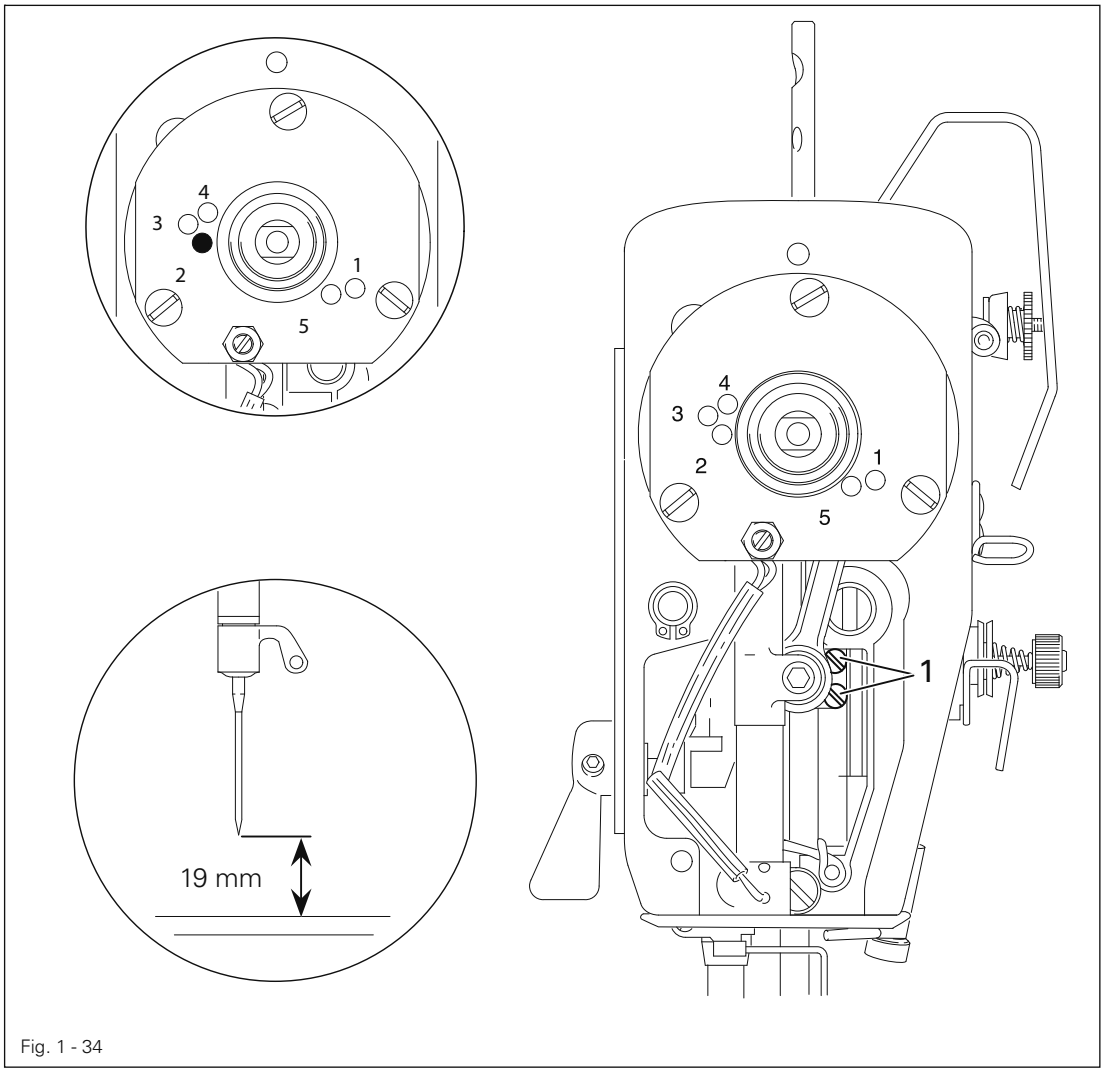

Fig. 1 - 34

- Without turning it, adjust the needle bar (screws **1)** in accordance with the **requirement**.

1.05.34 Needle rise, hook-to-needle clearance and bobbin case positioning-finger

Requirement

1. With the needle position set at "**middle**", the zigzag stitch setting at "**0**" and the needle bar position **2.0** past bdc (hole **1)** the hook point must be in the middle of the needle and the distance between the needle and the hook point must be **0.05** - **0.1 mm**.
2. The bobbin case positioning-finger **3** must be fitted so that there is a clearance of **0.5 mm** between the bottom section of the bobbin case and the front edge of the bobbin case positioning-finger (see arrow).

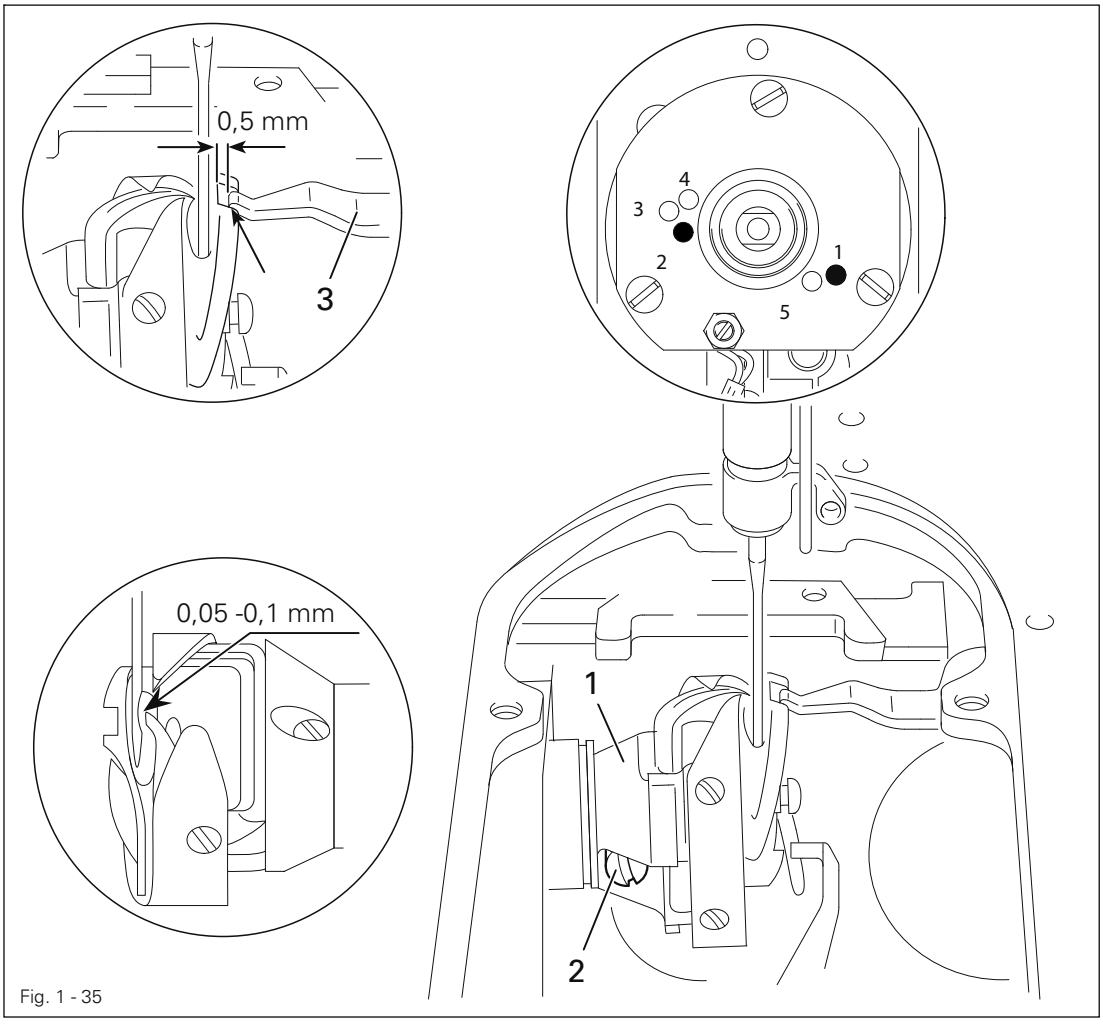

Fig. 1 - 35

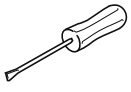

- Adjust the hook **1** (screw **2)** in accordance with **requirement 1.**
- Fit the bobbin case positioning-finger **3** in accordance with **requirement 2.**

1.05.35 Final adjustment of the needle height

Requirement
With the zigzag stitch set at "**0**", the needle position set at "**left**" and the hook point in the middle of the needle, the top edge of the needle eye must be **0.5 mm** underneath the hook point.

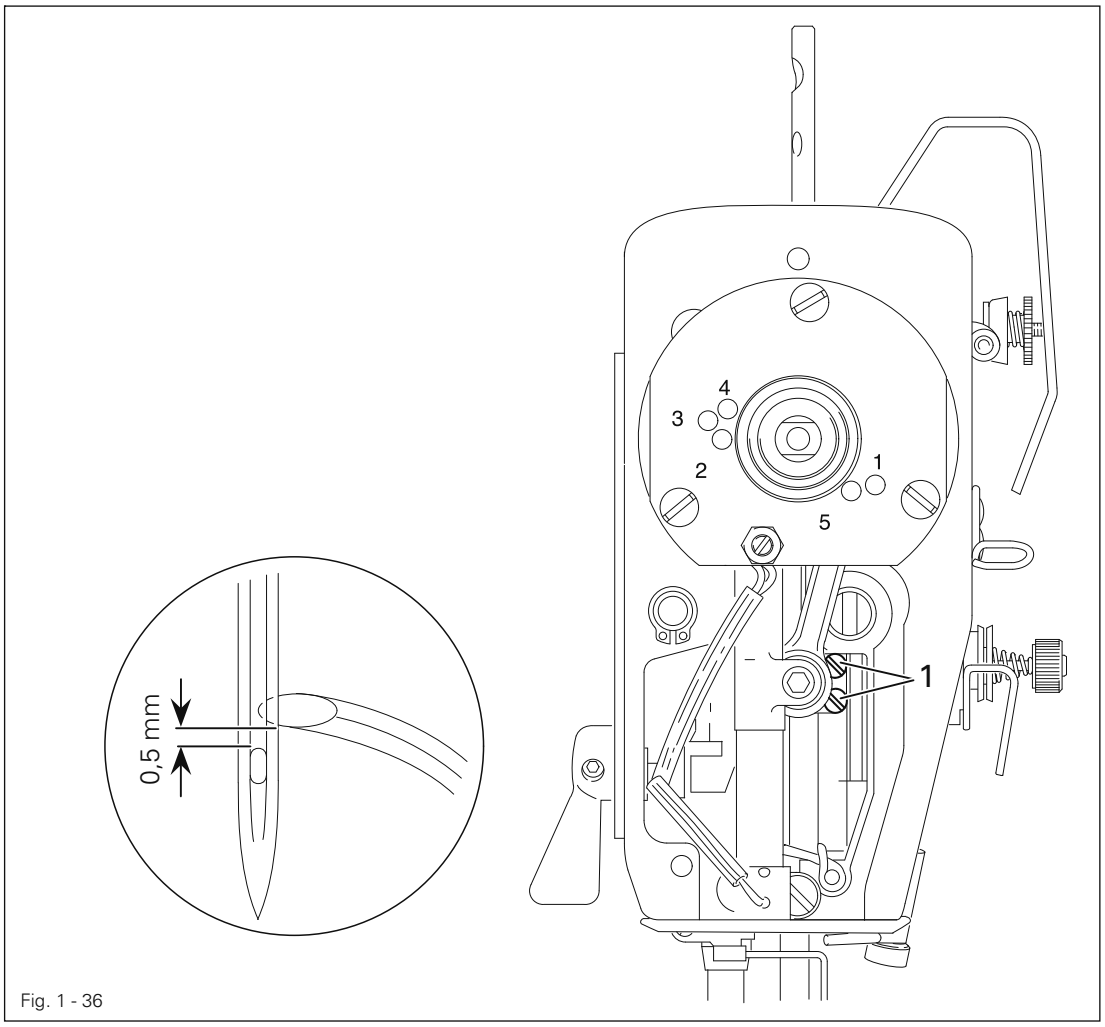

Fig. 1 - 36

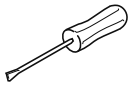

- Without turning it, adjust the needle bar **1** (screws **1**) in accordance with the **requirement**.

1.05.36 Bobbin case opener position

Requirement

1. There must be a clearance of 0.5 **mm** between the top edge of the bobbin case opener and the inner edge of the bottom section of the bobbin case.
2. Between the bobbin case opener finger and the bottom section of the bobbin case opener there must be a clearance of 0.8 **mm**.
3. At the left point of reversal of the bobbin case opener the bobbin case positioning-finger must be approx. 0.3 **mm** from the right side of the groove in the bottom section of the bobbin case.

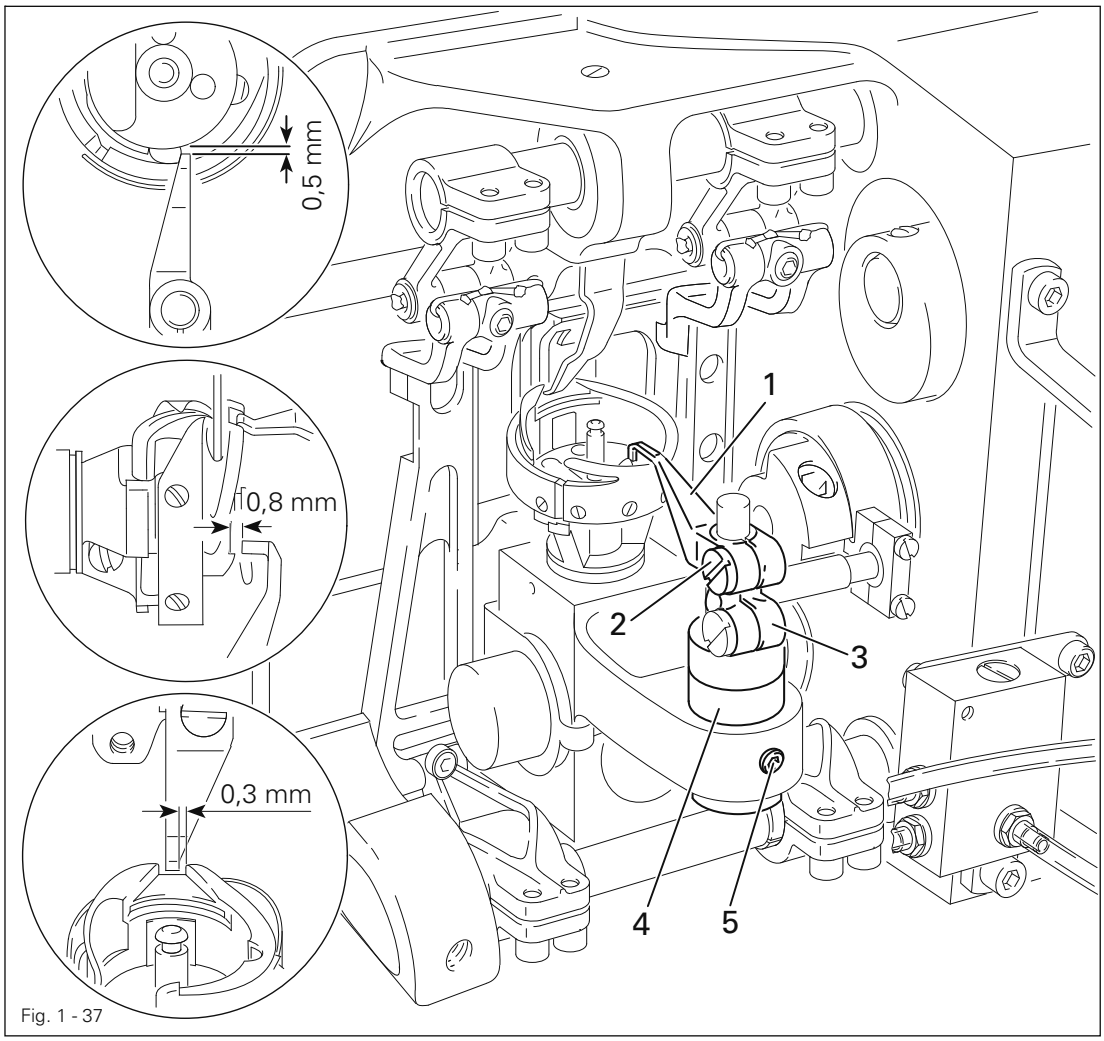

Fig. 1 - 37

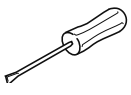

- Loosen screw **2.**
- Place bobbin opener **1** on the right side of the bobbin case base, press it against clamp crank **3** located underneath this and slightly tighten screw **2.**
- Adjust eccentric bearing bush **4** (screw **5)** in accordance with **requirements 1** and **2.**
- Adjust bobbin opener **1** in accordance with **requirement 3** and tighten screw **2,** taking care to see that bobbin opener **1** is touching clamp crank **3**

1.05.37 Bobbin case opener motion

Requirement
With the needle bar **2.0** past bdc (hole **1)** the bobbin case opener **3** must be at its right point of reversal.

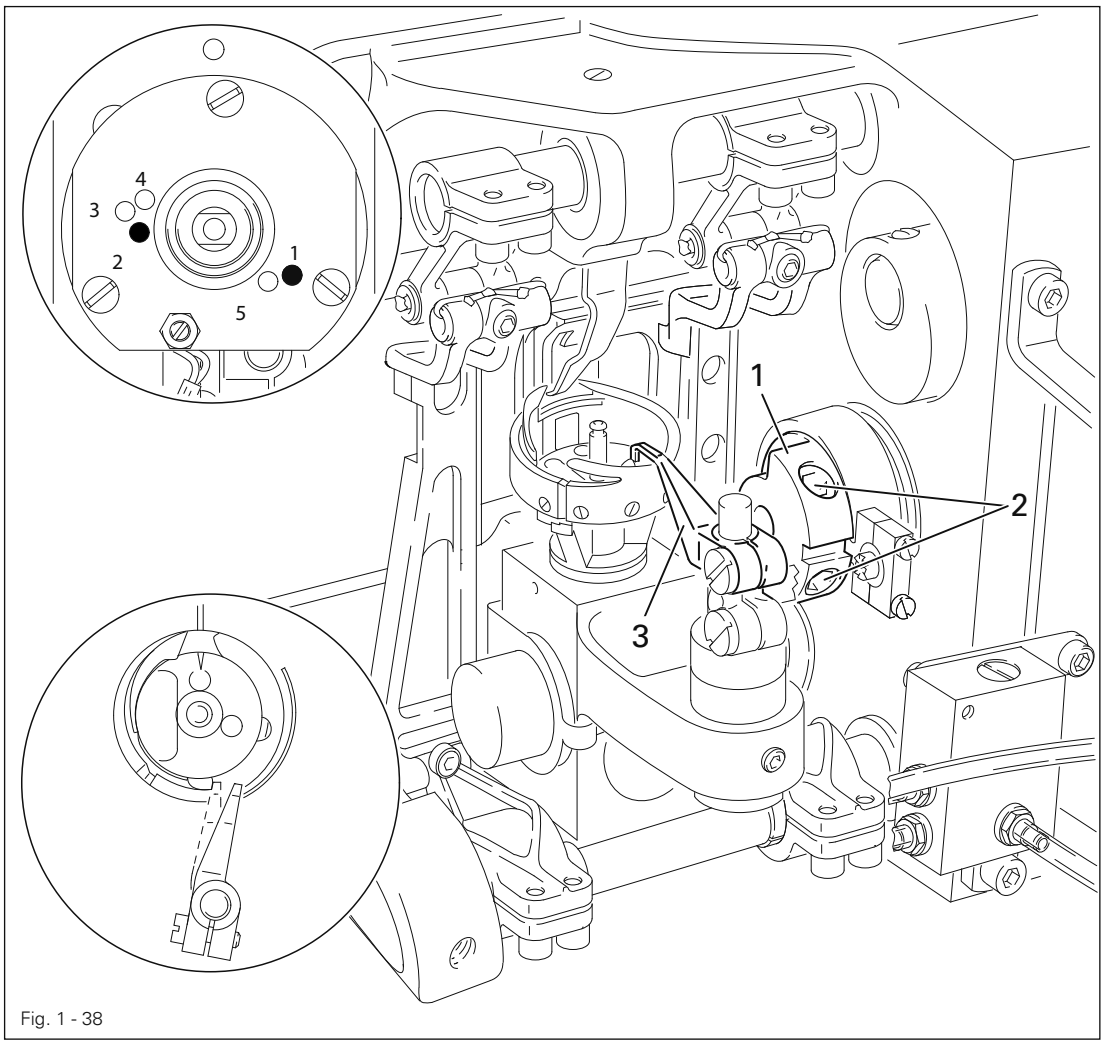

Fig. 1 - 38

- Adjust eccentric **1** (screws **2)** in accordance with the **requirement**.

1.05.38 Presser foot to needle plate clearance / Presser foot pressure

Requirement

1. When the hand lever is raised, the needle should penetrate exactly in the "needle hole centre" of the presser foot and the presser foot to needle plate clearance should be **5 mm**.
2. Even at top sewing speed the material should be fed without problems. There should be no pressure marks on the material.

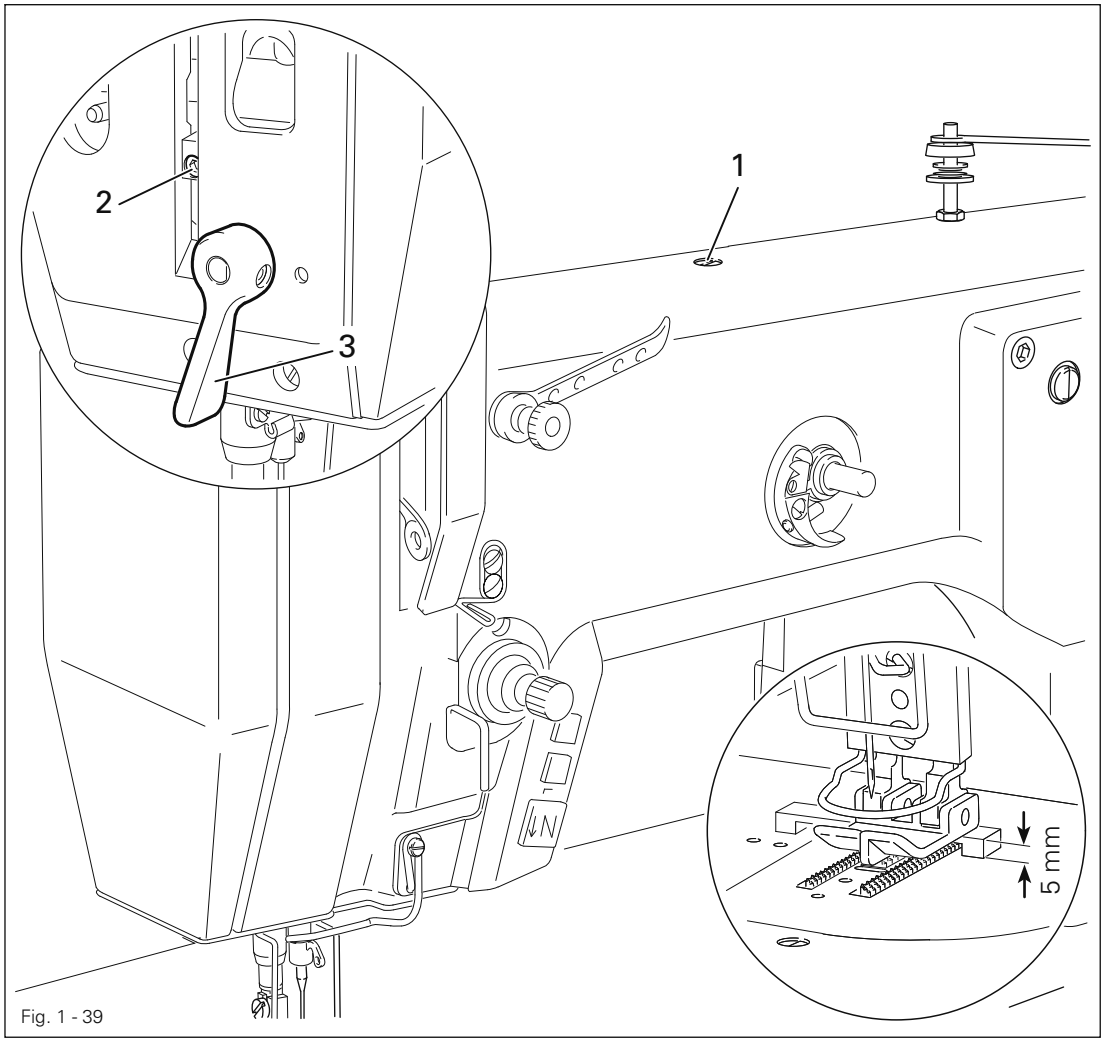

Fig. 1 - 39

- Set the zigzag stitch adjustment lever at "**0**" and the stitch position adjustment lever at "centre".
- Let the presser foot drop onto the needle plate and reduce the pressure on the presser bar by turning screws **1.**
- Place the feed dog adjustment gauge under the presser foot with the recess at the bottom.
- Loosen screw **2** and raise hand lever **3.**
- Allow the needle to penetrate the needle hole and align the presser foot in accordance with the **requirement 1.**
- Press the presser bar lifting piece down and tighten screw **2.**
- Turn screw **1** in accordance with the **requirement 2.**

The presser foot pressure (screw **1)** can be increased (⊕) or reduced (⊖) as required..

1.05.39 Thread diverter pin

Requirement
With the needle bar at bdc the top edge of the thread guide hole must be at the same height as the bottom edge of the thread diverter.

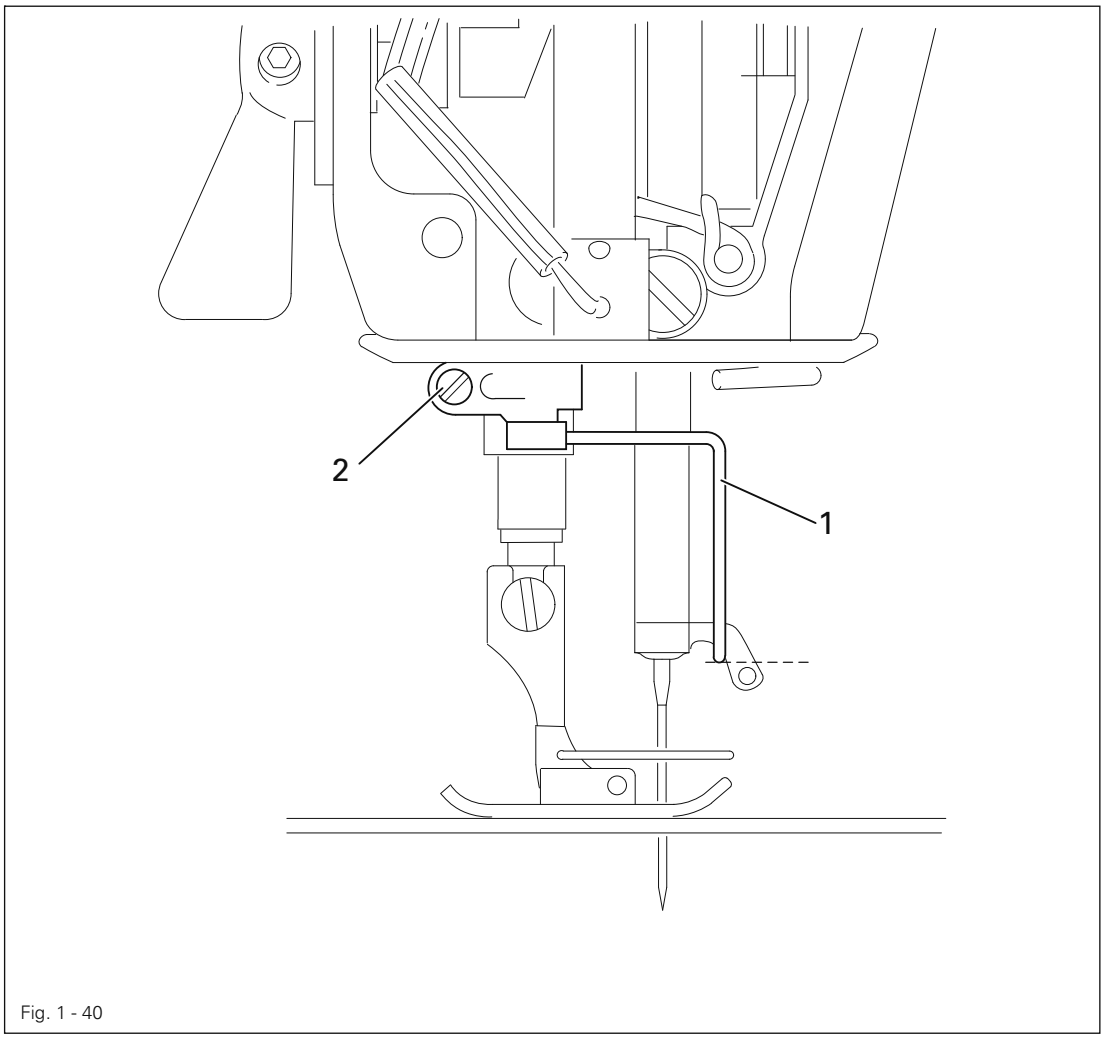

Fig. 1 - 40

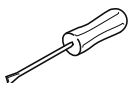

- Move thread diverter **1** (screw **2**) in accordance with the **requirement**, ensuring that it remains parallel to the base plate.

1.05.40 Limiting the knee lever stroke

Requirement
When the knee lever is pressed the hand lever must drop automatically and the presser foot must be just over **7 mm** above the needle plate.

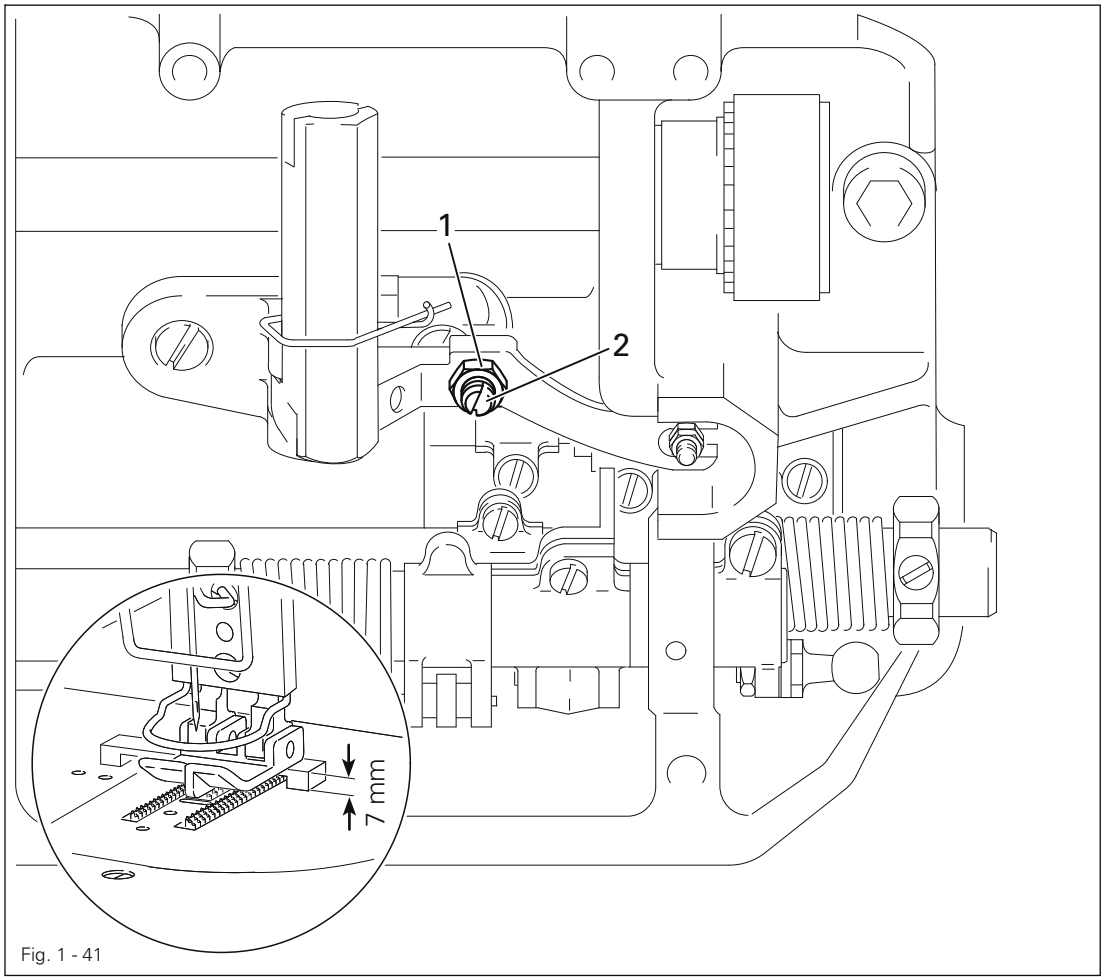

Fig. 1 - 41

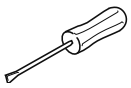

- Place the feed dog gauge under the presser foot with its recess facing downwards.
- Lower the presser foot onto the gauge.
- Loosen nut **1** and turn screw **2** out a few turns.
- Move the knee lever to the right until a noticeable resistance is felt, making sure that the presser foot is not lifted off the gauge, and hold it at this position.
- Turn screw **2** in as far as it will go, then back out by one turn, and lock it in place with nut **1.**

1.05.41 Knee lever play

Requirement
When lightly pressing the knee lever there should be a noticeable play between nut **1** and fork **3.**

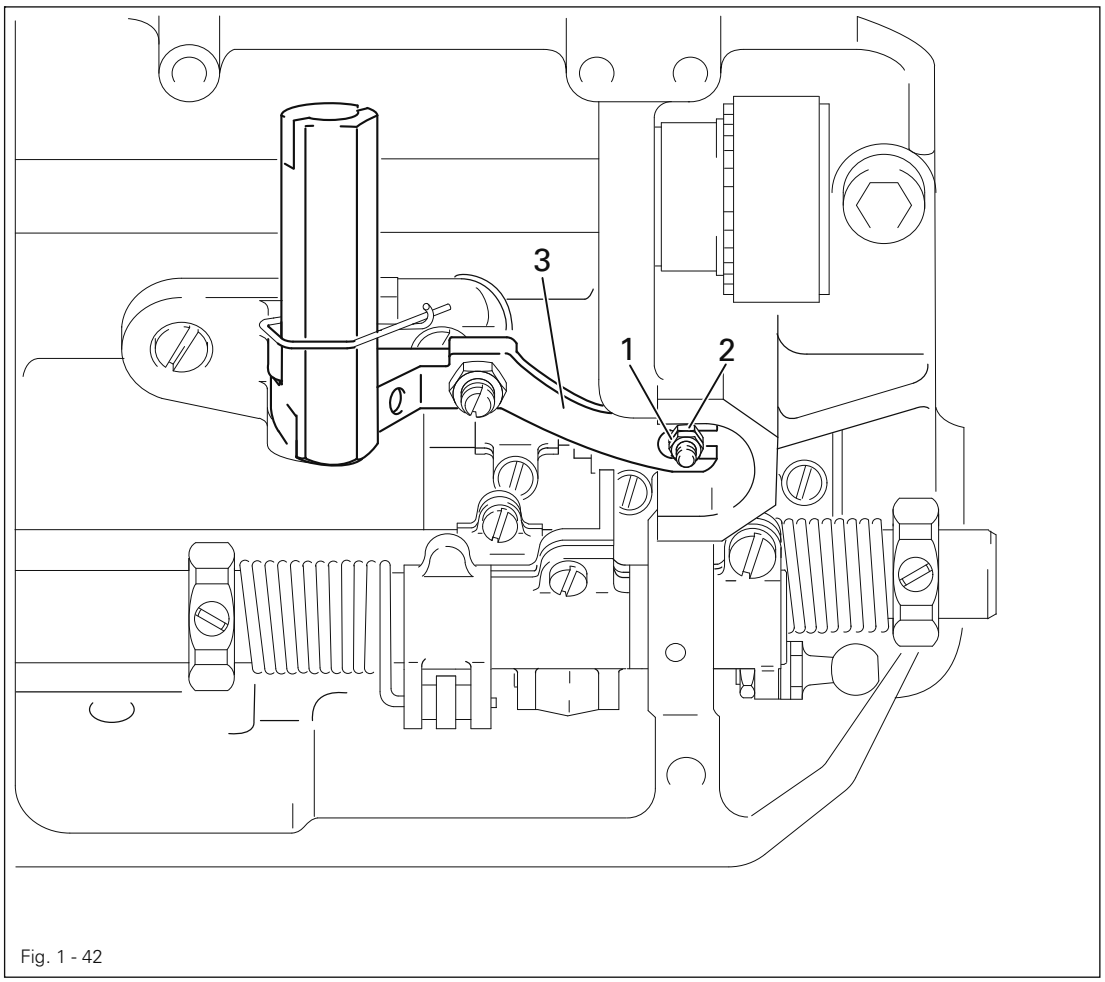

Fig. 1 - 42

- Adjust nut **1** (lock nut **2)** in accordance with the **requirement**.

1.05.42 Bobbin winder

Requirement

1. With the bobbin winder engaged the bobbin winder spindle must be turned reliably, but friction wheel **5** must not touch drive wheel **1** when the bobbin winder is switched off.
2. The bobbin winder must disengage automatically when the thread is approx. **1 mm** from the edge of the bobbin.

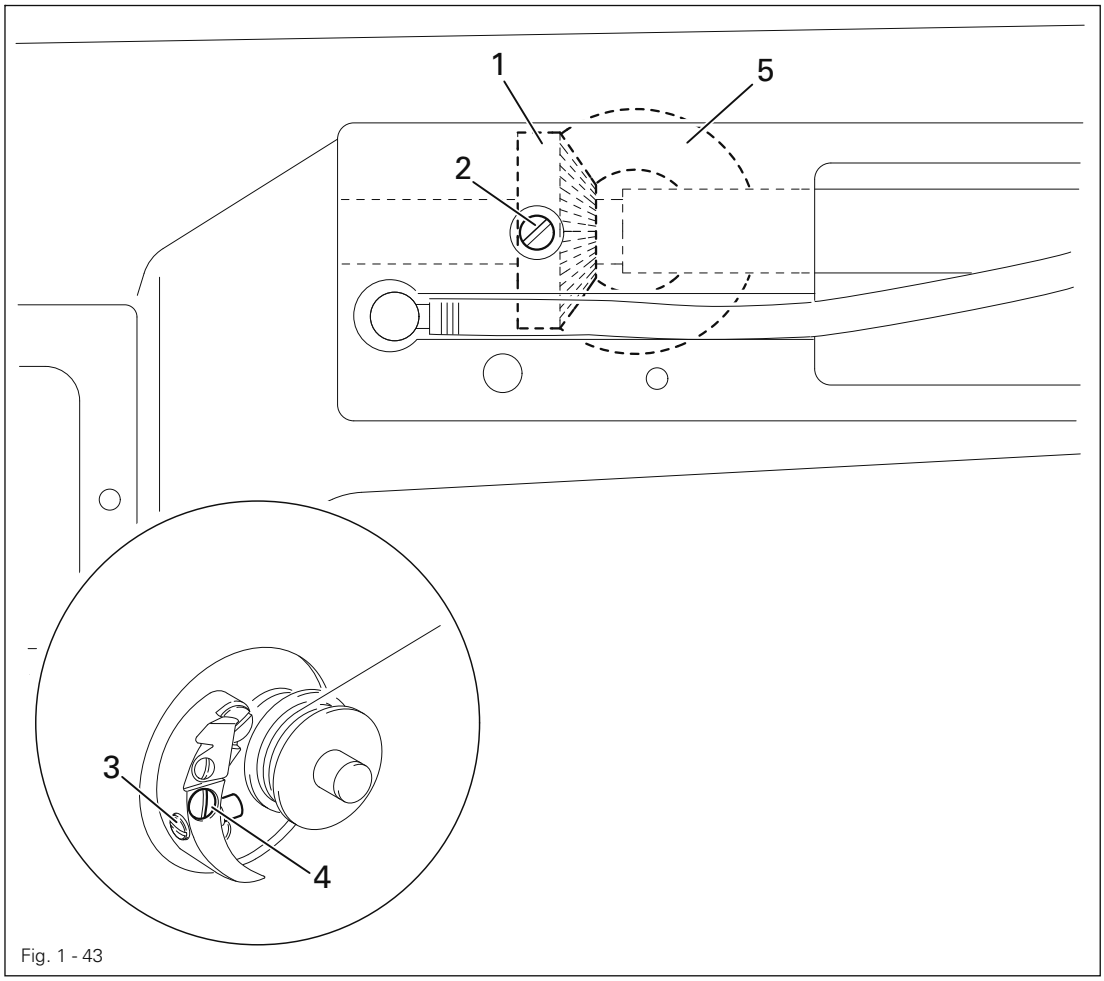

Fig. 1 - 43

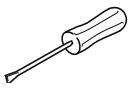

- Position drive wheel **1** in accordance with **requirement 1** and tighten screw **2.**
- Place a bobbin onto the bobbin winder, thread the bobbin and engage the bobbin winder
- Move regulating pin **3** in accordance with **requirement 2** and tighten screw **4.**

1.05.43 Stitch condensation (only on the PFAFF 3704-2/02)

Requirement
When the stitch condensation function is switched on, the feed stroke of the main and differential feed dog should be 0.2 – 0.3 **mm**.

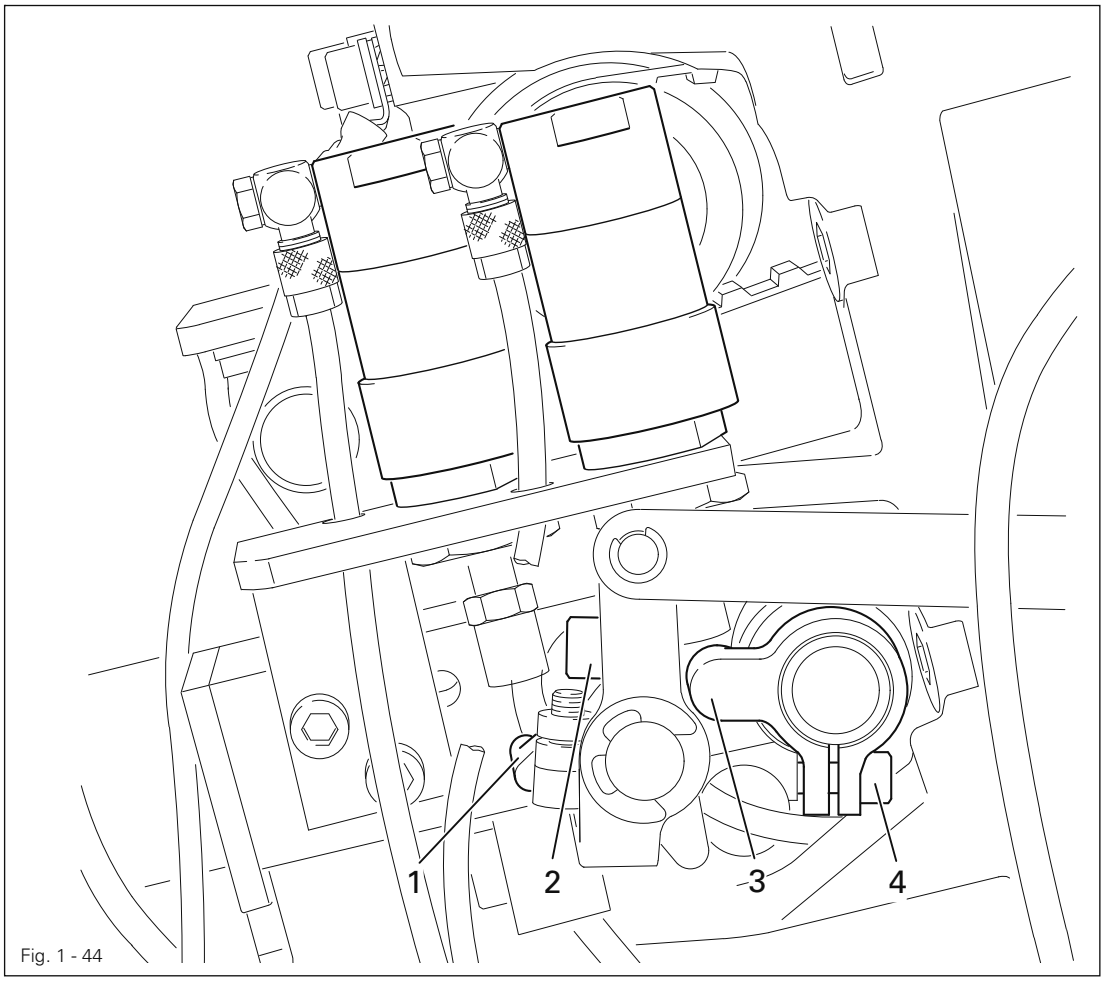

Fig. 1 - 44

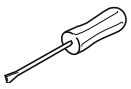

- Adjust crank **1** (screw **2)** and crank **3** (screw **4)** in accordance with the **requirement**.

1.05.44 Switching to reverse feed (only on the PFAFF 3704-2/03)

Requirement
When the reverse feed function is switched on, the actual length of the reverse stitches should correspond to the set stitch length.

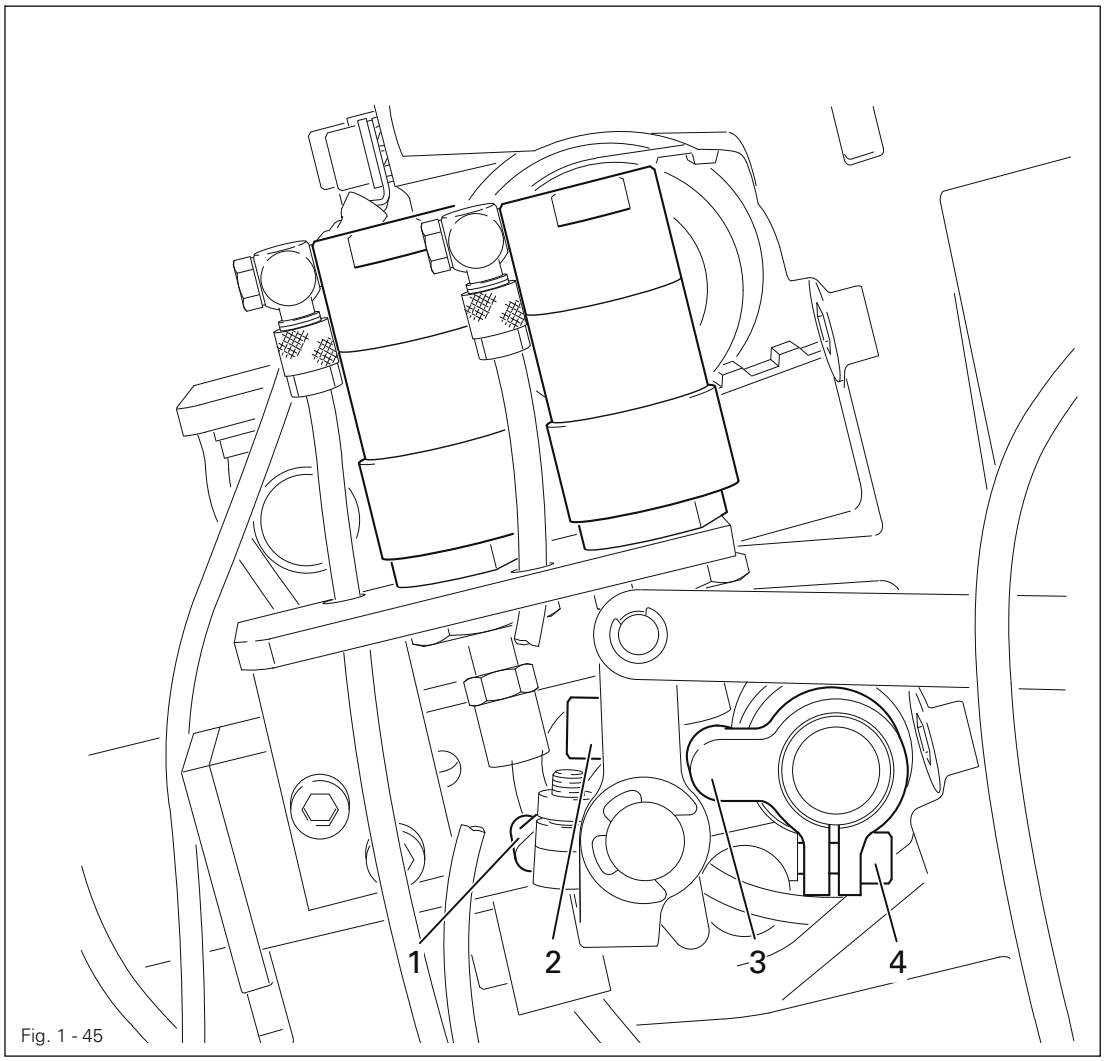

Fig. 1 - 45

- Adjust crank **1** (screw **2)** and crank **3** (screw **4)** in accordance with the **requirement**.

1.05.45 Thread puller (only on the PFAFF 3704-2/02)

Requirement

The thread puller should

1. draw so much thread that a secure seam start is guaranteed at all times and
2. remain in its end front position until the thread trimming operation is finished.

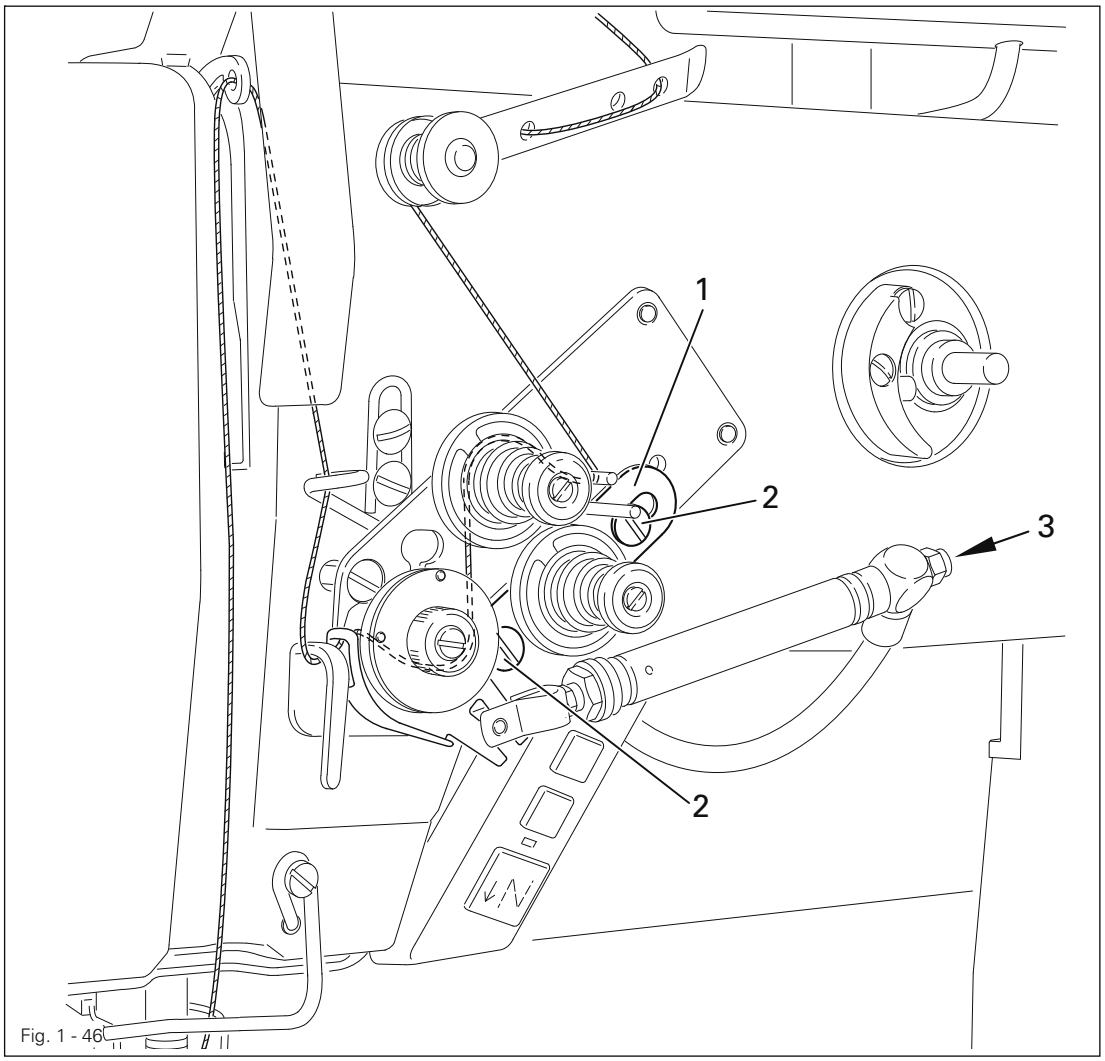

Fig. 1 - 46

- Adjust cylinder bracket **1** (screws **2**) in accordance with **requirement 1.**
- Adjust throttle **3** in accordance with **requirement 2.**

1.06 Adjusting the thread trimmer -900/24

1.06.01 Axial position of the control cam

Requirement

1. Roller **5** should be at a distance of **0.3 mm** from the control cam **1.**
2. Adjustment ring **3** should be touching the control cam **1.**

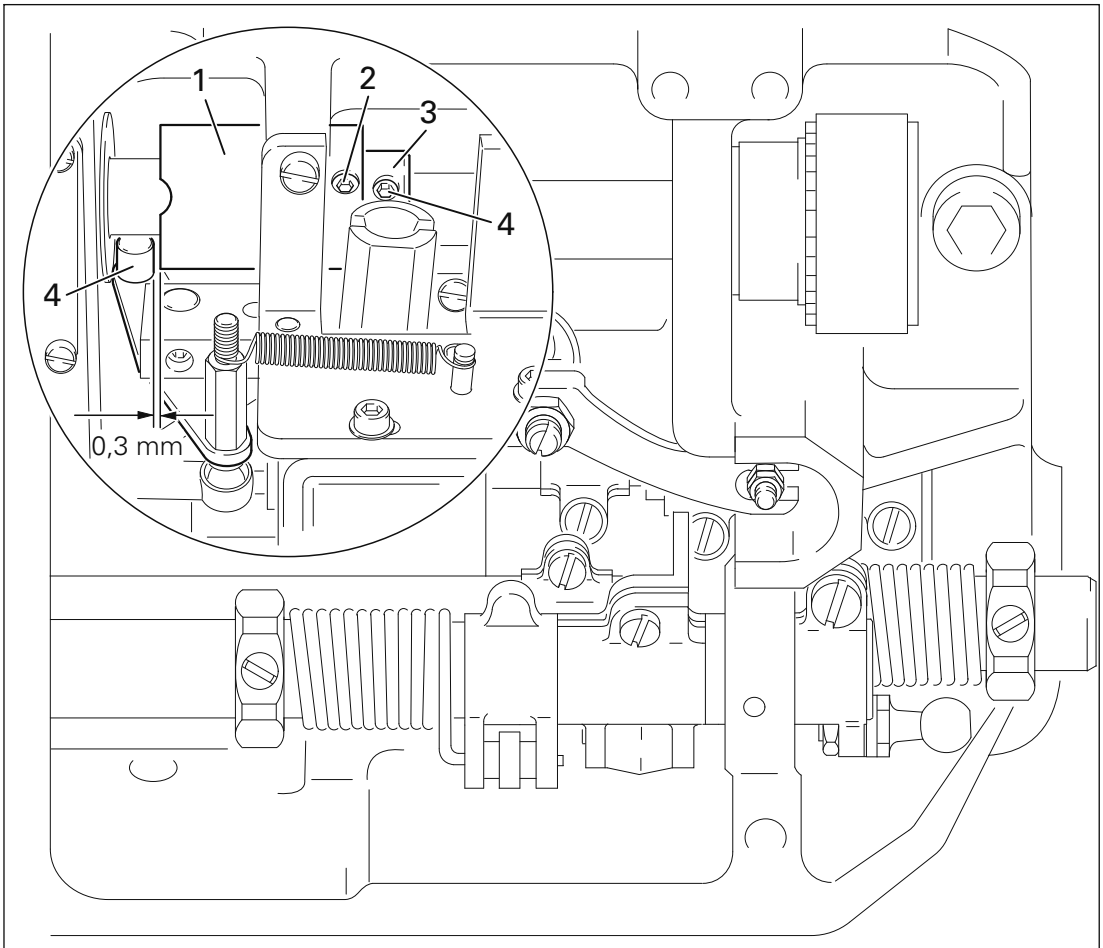

Fig. 1 - 47

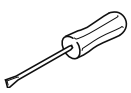

- Shift control cam **1** (screw **2**) and adjustment ring **3** (screw **4**) in accordance with the **requirement**s.

1.06.02 Preliminary adjustment of the control cam

Requirement

1. In the needle rise position (hole **1)** the roller lever **4** should lock into the corresponding groove of the control cam.
2. The control cam **1** should be touching adjustment ring **3.**

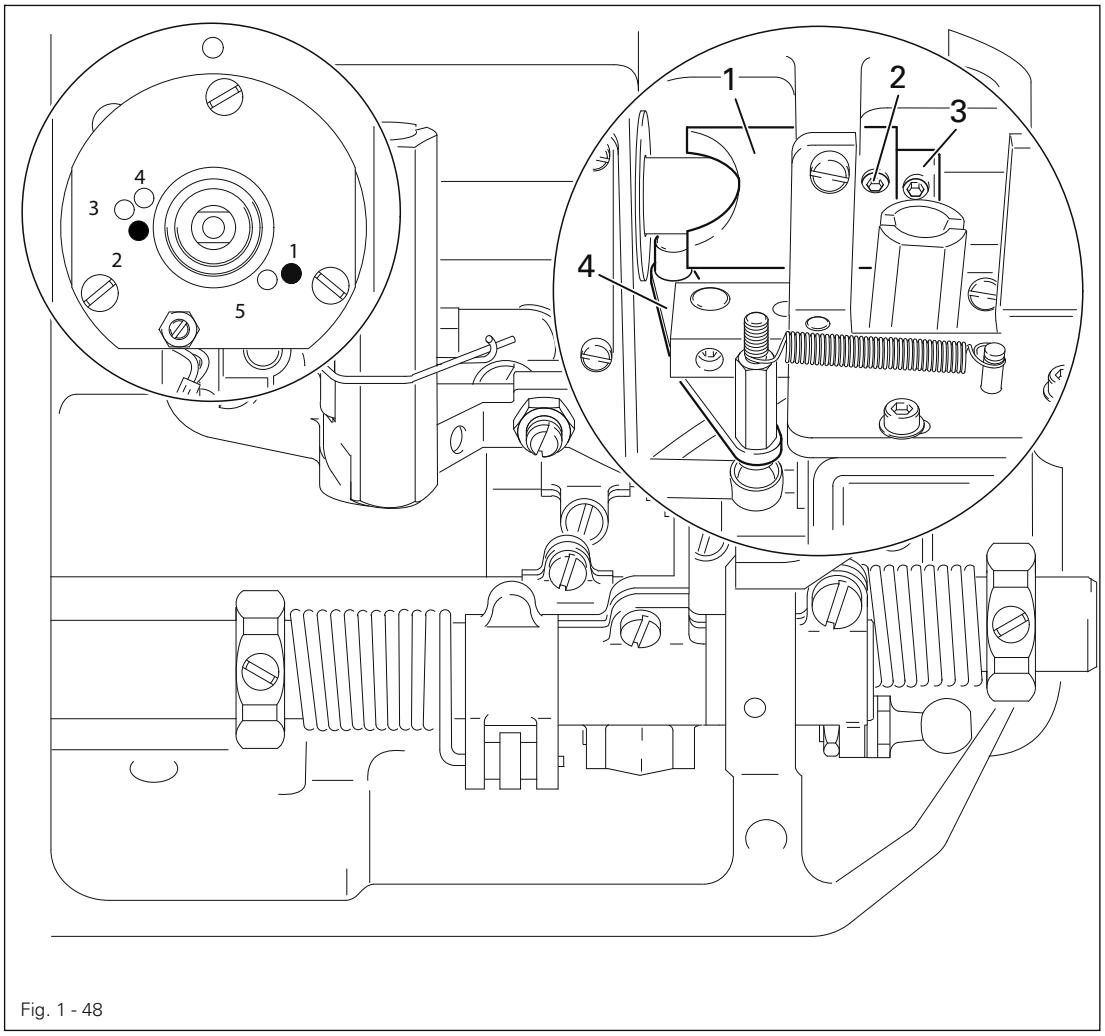

Fig. 1 - 48

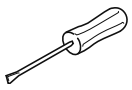

- Turn control cam **1** (screws **2)** in accordance with **requirement 1** and shift it in accordance with **requirement 2.**

1.06.03 Position of the thread catcher and cutting test

Requirement
When the thread trimmer is in its neutral position, the edge of thread catcher **6** should be flush with the edge of the mounting plate **4.**

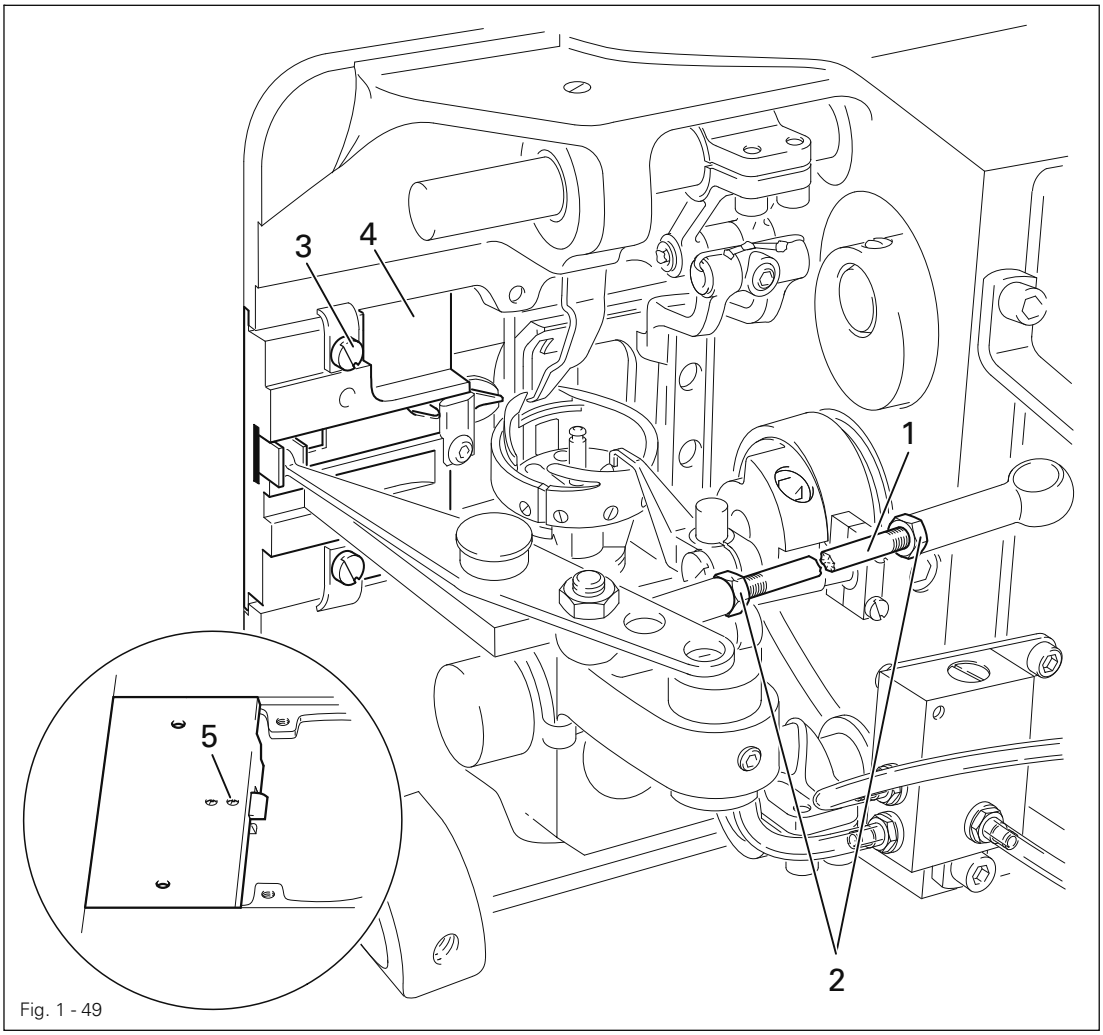

Fig. 1 - 49

- Turn linkage rod **1** (nuts **2,** left and right thread) in accordance with the **requirement**.
- During the cutting test, remove linkage rod **1,** loosen screws **3** and remove mounting plate **4.**
- Carry out the cutting test with double thread.
- By turning screw **5** adjust the cutting pressure.
- Fit mounting plate **4** so that its edge is flush with the edge of the bed-plate.
- Tighten screws **3** and replace linkage rod **1.**

1.06.04 Readjustment of the control cam

Requirement

1. When the end of the hook guard **3** is level with of the right edge of the bobbin case position finger **4,** the thread catcher **5** should begin moving forwards.
2. The control cam **1** should be touching adjustment ring **6.**

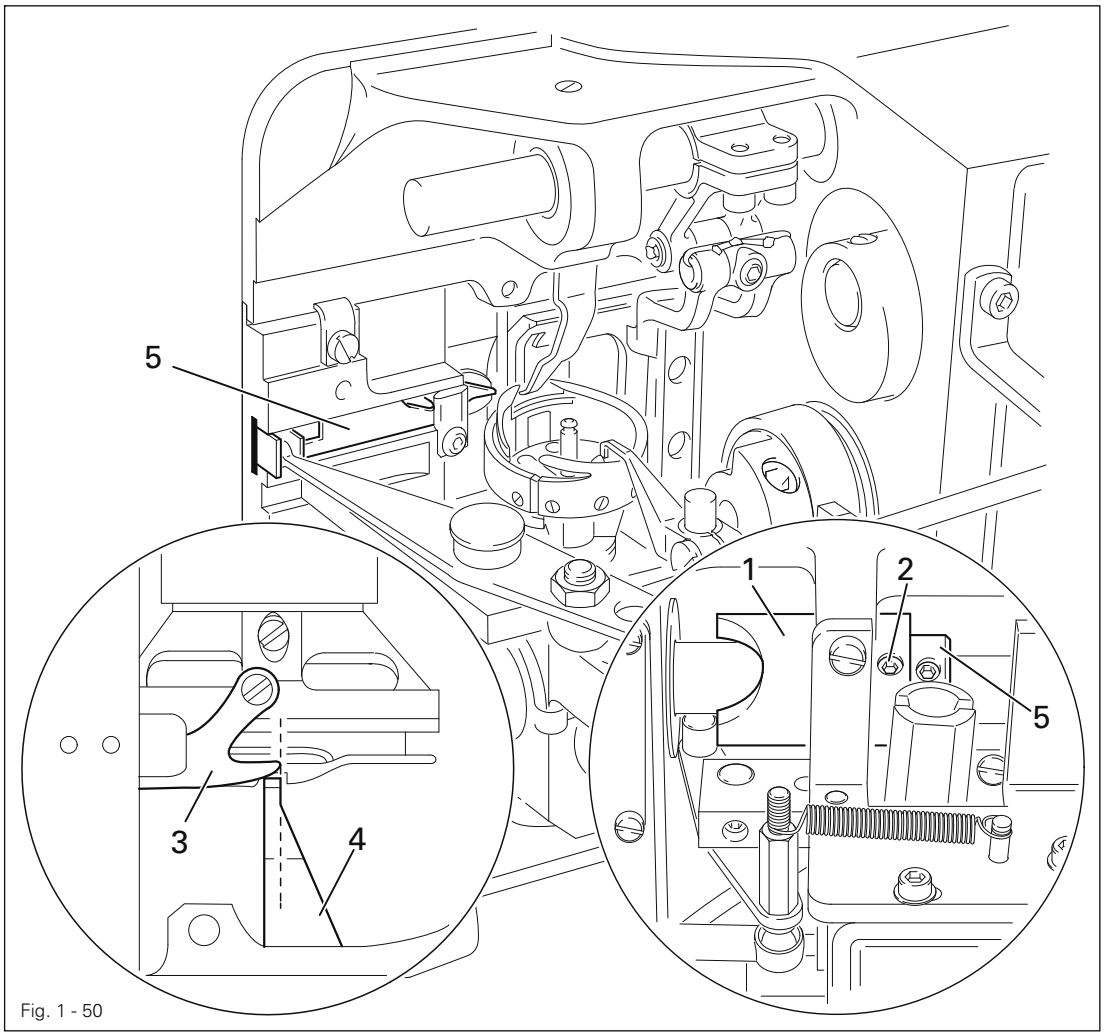

Fig. 1 - 50

- Bring the needle bar to b.d.c.
- Turn control cam **1** (screws **2)** in accordance with **requirement 1** and shift it in accordance with **requirement 2.**

1.06.05 Needle thread tension release

Requirement

1. When solenoids **3** are activated, the tensions disks **4** should be at least **0.5 mm** apart.
2. When the thread trimmer is in its neutral position and the sewing foot is positioned on the needle plate, the tension should be fully effective.

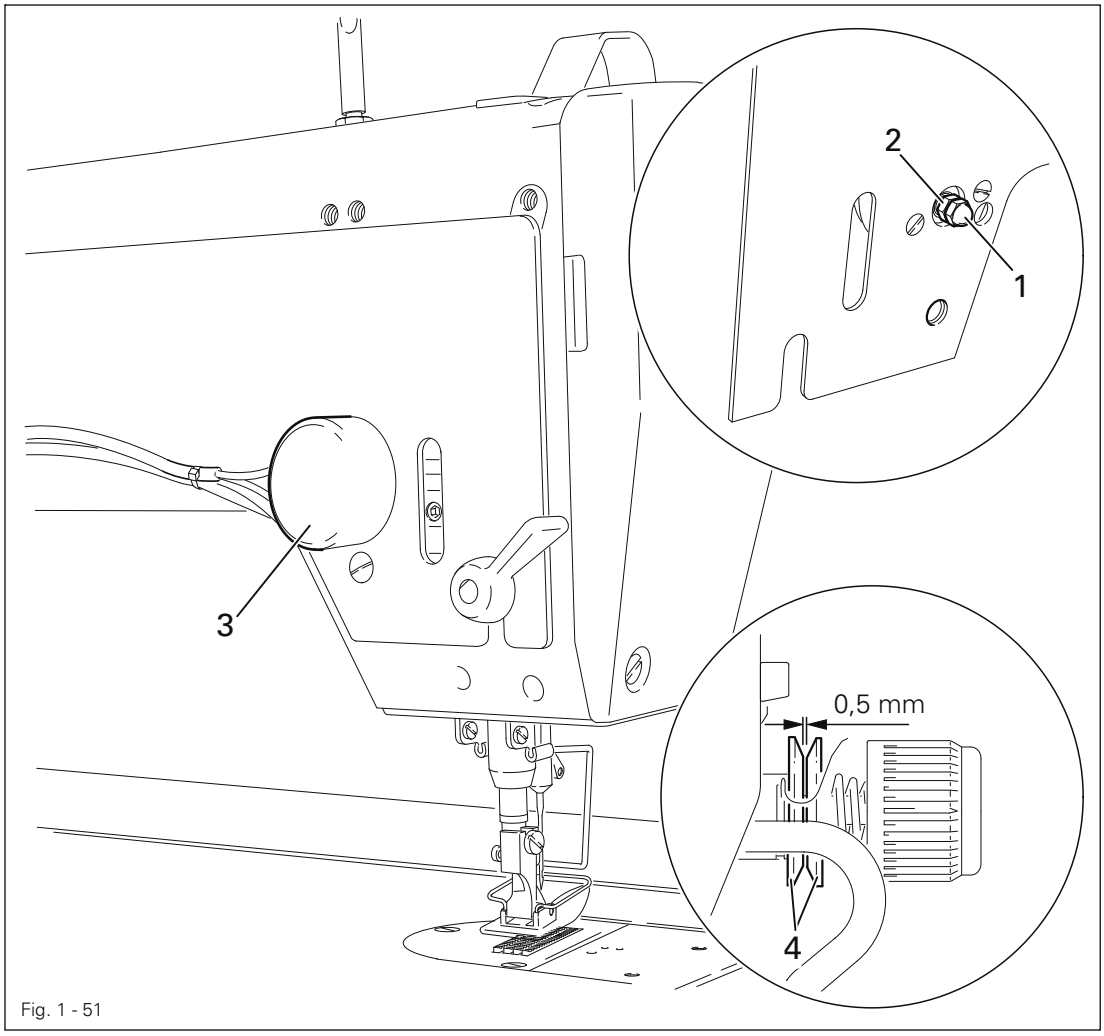

Fig. 1 - 51

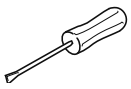

- Unscrew the thread wiper.
- Turn nut **1** (nut **2)** in accordance with the **requirement**s.
- Screw thread wiper back into place.

2 Switch diagrams

2.01 Pneumatics-switch diagram (for the PFAFF 3704)

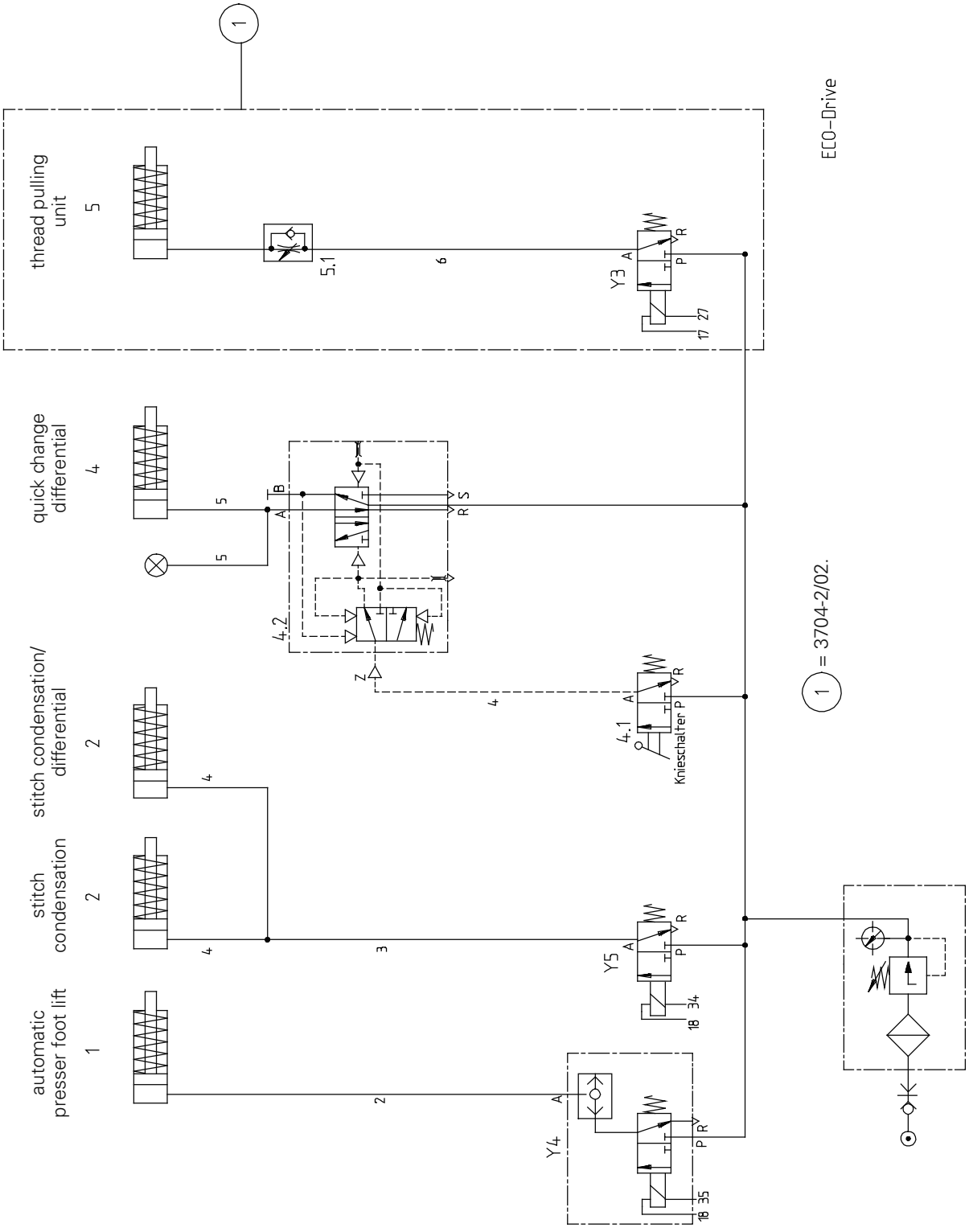

2.02 Circuit diagrams

Referenc list for circuit diagrams

A1	Controller P40 ED
A2	Control panel S3
A14	Oberteilerkennung (OTE)
B1	Initiator zig-zag stitch control (only on the PFAFF 939 U)
H1	Sewing lamp
H10	LED Stitch counter
Q1	Main switch
S1	Pedal set value transmitter
S6	Start inhibitor key (only on the PFAFF 939 U)
S41	Manual backtacking
S42	Needle position change key
S43	Single stitch key
S46	Bridge start inhibitor (only on the PFAFF 3704)
X0	RS 232 interface (PC)
X1	Motor
X2	Incremental transmitter
X3	Set value transmitter
X4	Control panel S3
X5	Inputs/outputs
X6	Bobbin thread monitor (optional)
X7	Light barrier (optional)
X22	-900/.. thread trimmer (FS)
X24	-910/.. automatic presser foot lift
X25	-911/.. backtacking device
X28	Thread tension release (FSL)
X40	Keyboard
X46	Start inhibitor
X50	Sewing head identification (OTE)
Y2	-900/.. thread trimmer
Y4	-910/.. automatic presser foot lift
Y5	-911/.. Vbacktacking device
Y8	Thread tension release (FSL)

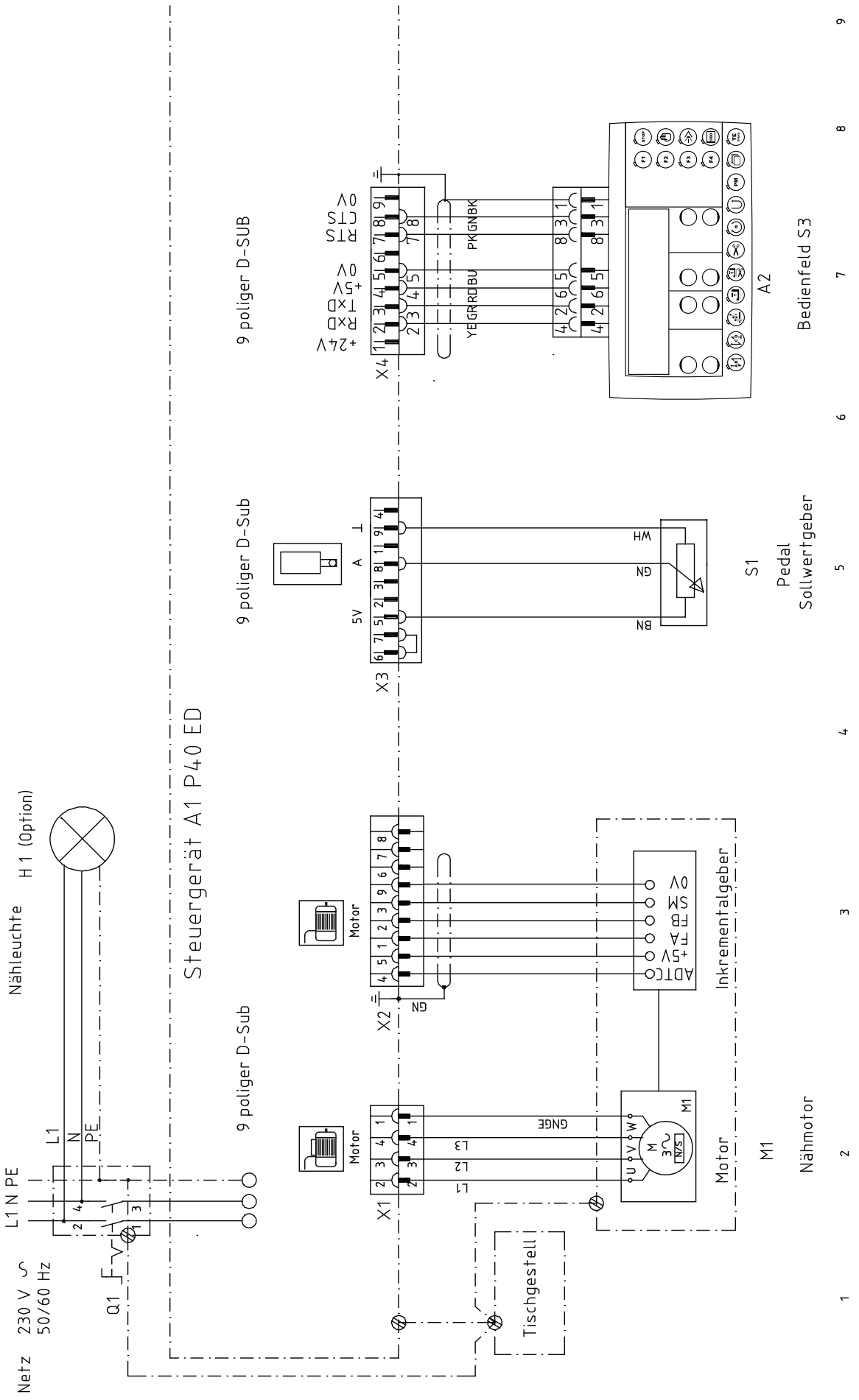
Netz 230 V ~ 50/60 Hz
L1 N PE
Q1
Nähleuchte H 1 (Option)
Steuergerät A1 P40 ED
9 poliger D-Sub
X1
X2
X3
X4
Motor
Inkrementalgeber
ADTC +5V FA FB SM 0V
Motor
M1
Nähmotor
Tischgestell
S1
Pedal
Sollwertgeber
A2
Bedienfeld S3
+24V RxD TxD +5V 0V RTS CTS 0V

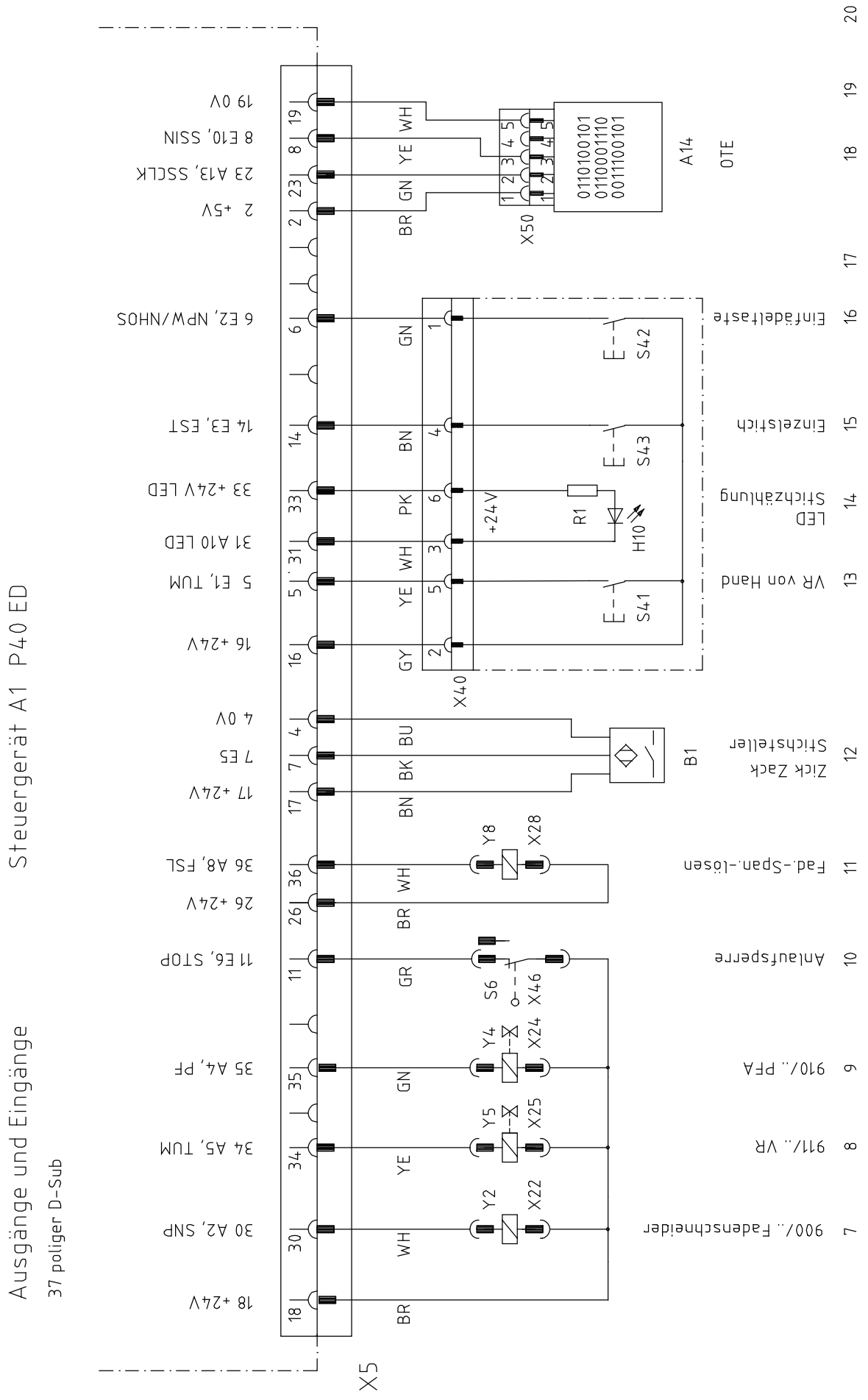
Ausgänge und Eingänge
37 poliger D-Sub
Steuergerät A1 P40 ED
18 +24V
30 A2, SNP
34 A5, TUM
35 A4, PF
11 E6, STOP
26 +24V
36 A8, FSL
17 +24V
7 E5
4 0V
16 +24V
5 E1, TUM
31 A10 LED
33 +24V LED
14 E3, EST
6 E2, NPW/NHOS
2 +5V
23 A13, SSCLK
8 E10, SSIN
19 0V
X5
BR
WH
YE
GN
GR
BN
PK
GY
BU
BK
Y2
Y4
Y5
Y8
X22
X24
X25
X28
X46
S6
B1
X40
+24V
R1
H10
S41
S42
S43
X50
0110100101
0110001110
0011100101
A14
OTE
900/.. Fadenschneider
911/.. VR
910/.. PFA
Anlaufsperre
Fad.-Span.-lösen
Zick Zack Stichsteller
VR von Hand
LED Stichzählung
Einzelstich
Einfädeltaste
20
19
18
17
16
15
14
13
12
11
10
9
8
7

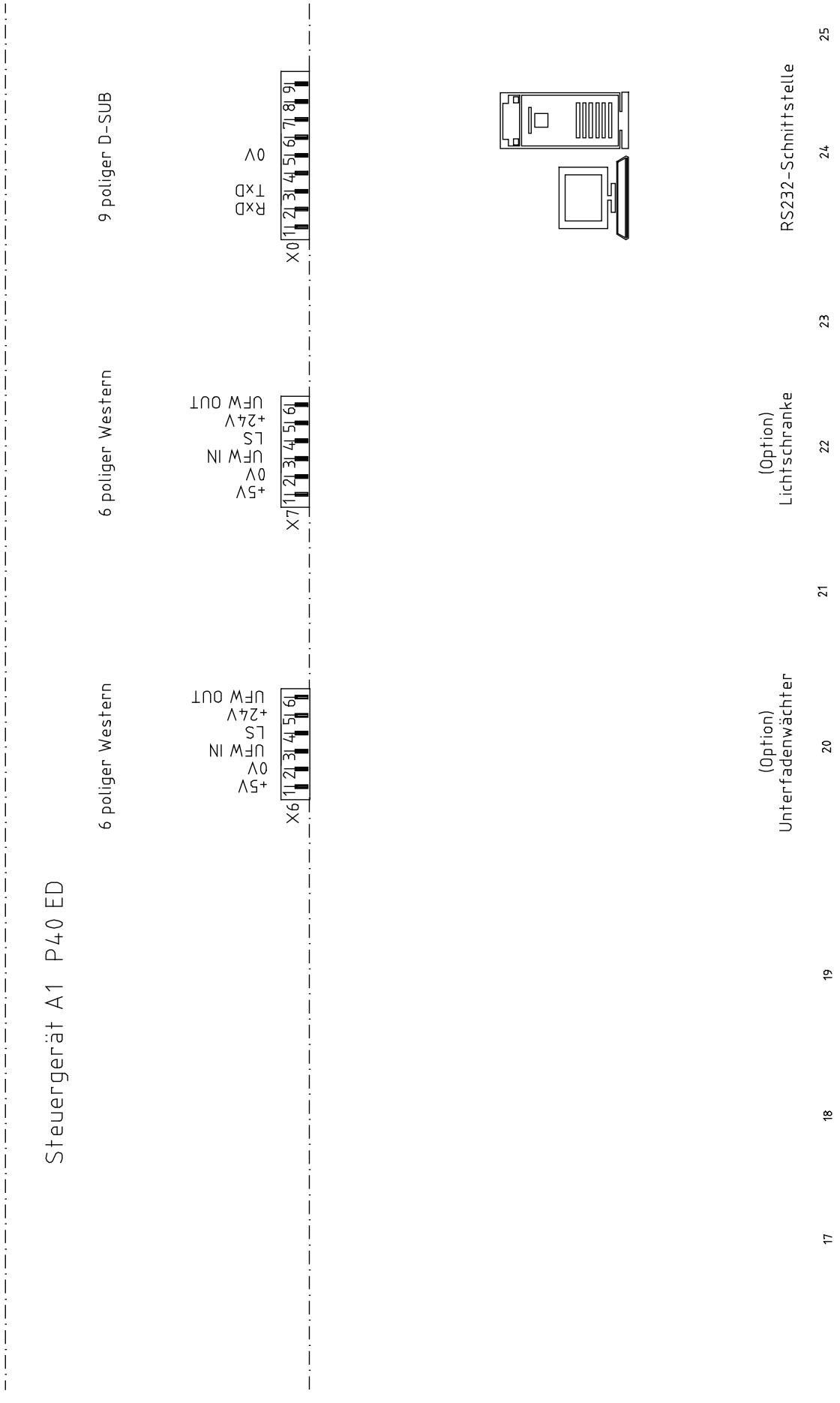
Steuergerät A1 P40 ED
6 poliger Western
X6
+5V
0V
UFW IN
LS
+24V
UFW OUT
(Option)
Unterfadenwächter
6 poliger Western
X7
+5V
0V
UFW IN
LS
+24V
UFW OUT
(Option)
Lichtschranke
9 poliger D-SUB
X0
RxD
TxD
0V
RS232-Schnittstelle
17
18
19
20
21
22
23
24
25

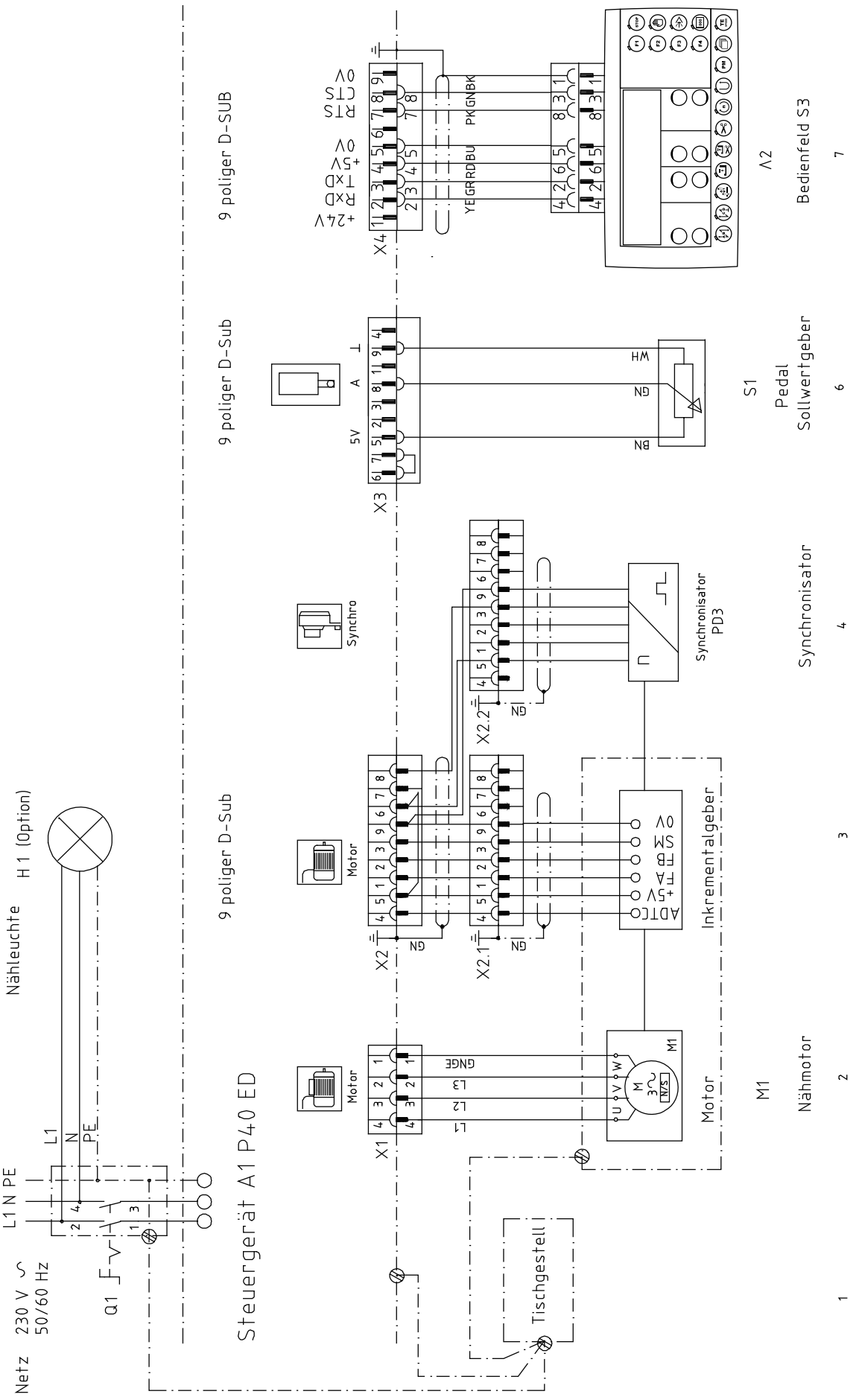
Netz 230 V ~ 50/60 Hz
Q1
L1 N PE
L1
N
PE
Nähleuchte H 1 (Option)
Steuergerät A1 P40 ED
9 poliger D-Sub
9 poliger D-Sub
9 poliger D-SUB
X1
X2
X2.1
X2.2
X3
X4
Motor
Motor
Synchro
5V
A
⊥
+24V
RxD
TxD
+5V
0V
RTS
CTS
0V
YE GR RD BU
PK GN BK
GN
GNGE
L1
L2
L3
Tischgestell
Synchronisator PD3
Inkrementalgeber
ADTC
+5V
FA
FB
SM
0V
M1
Motor
M1
Nähmotor
S1
Pedal
Sollwertgeber
BN
GN
WH
Λ2
Bedienfeld S3
1
2
3
4
6
7

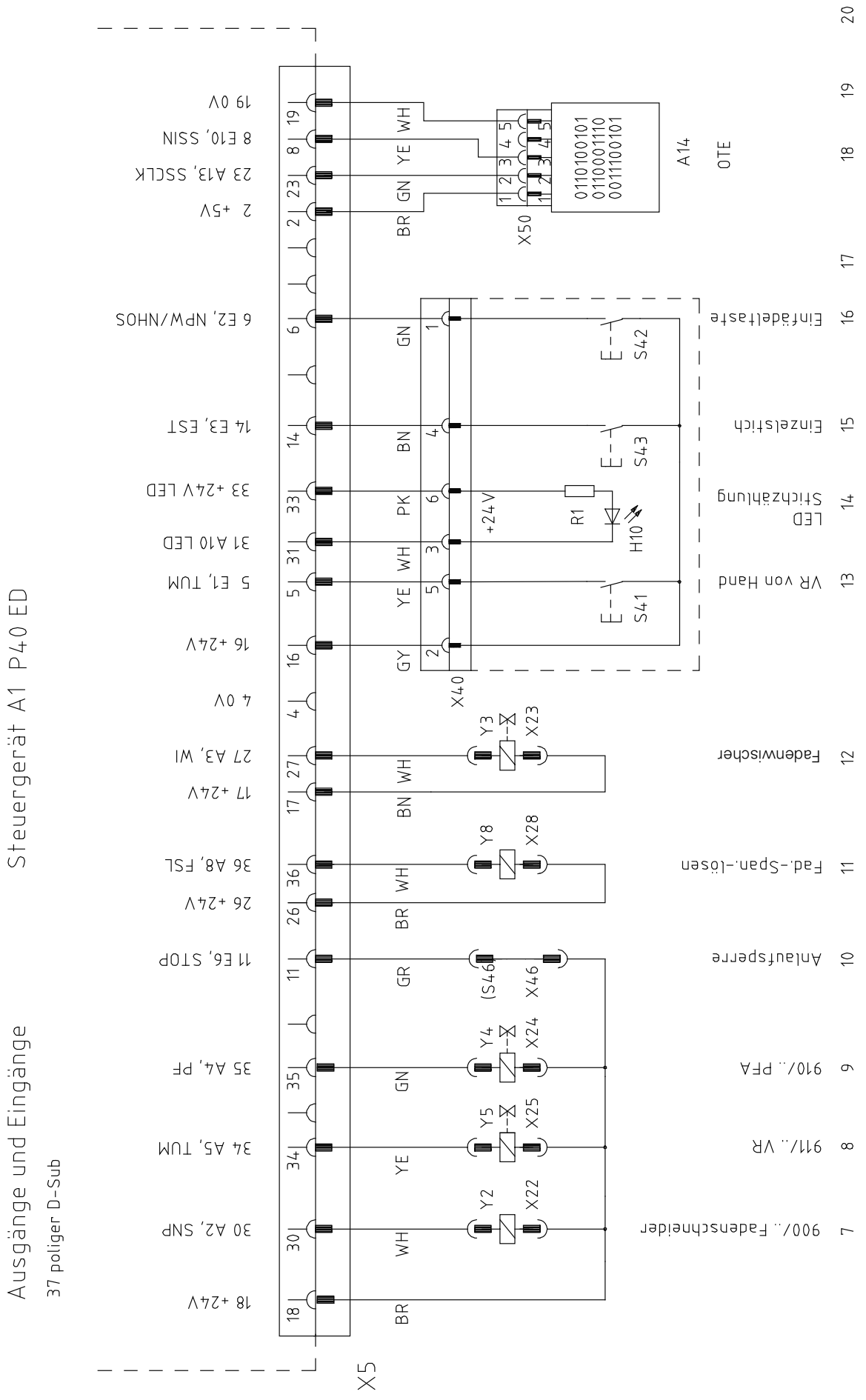
Steuergerät A1 P40 ED
Ausgänge und Eingänge
37 poliger D-Sub
X5
19 0V
8 E10, SSIN
23 A13, SSCLK
2 +5V
6 E2, NPW/NHOS
14 E3, EST
33 +24V LED
31 A10 LED
5 E1, TUM
16 +24V
4 0V
27 A3, WI
17 +24V
36 A8, FSL
26 +24V
11 E6, STOP
35 A4, PF
34 A5, TUM
30 A2, SNP
18 +24V
BR WH GN YE GN BN PK WH YE GY BN WH BR GR GN YE WH BR
X50
A14
OTE
0110100101
0110001110
0011100101
X40
Einfädeltaste
Einzelstich
LED Stichzählung
VR von Hand
S42
S43
S41
R1
H10
+24V
Fadenwischer
Fad.-Span.-lösen
Anlaufsperre
910/.. PFA
911/.. VR
900/.. Fadenschneider
Y3
X23
Y8
X28
(S46)
X46
Y4
X24
Y5
X25
Y2
X22

Steuergerät A1 P40 ED
6 poliger Western
X6
+5V
0V
UFW IN
LS
+24V
UFW OUT
6 poliger Western
X7
+5V
0V
UFW IN
LS
+24V
UFW OUT
9 poliger D-SUB
X0
RxD
TxD
0V
(Option)
Unterfadenwächter
(Option)
Lichtschranke
RS232-Schnittstelle
17
18
19
20
21
22
23
24
25

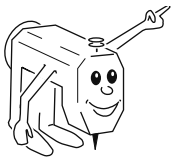

Note

PFAFF® Industrial



Europäische Union
Wachstum durch Innovation – EFRE



PFAFF Industriesysteme
und Maschinen AG

Hans-Geiger-Str. 12 - IG Nord
D-67661 Kaiserslautern

Phone: +49-6301 3205 - 0
Fax: +49-6301 3205 1386
E-mail: info@pfaff-industrial.com

Hotlines:

Technical service:	+49-175/2243-101
Application consultance:	+49-175/2243-102
Spare-parts hotline:	+49-175/2243-103

Printed in Germany

© PFAFF Industriesysteme und Maschinen AG 2009, PFAFF is the exclusive trademark of VSM Group AB.PFAFF Industriesysteme und Maschinen AG is an authorized licensee of the PFAFF trademark.