TABLE OF CONTENTS

Covers Head 3-2
Cutting 3-4
Needle Bar and Top Bearing 3-6
Crank Mechanism 3-8
Bite Assembly 3-10
Top Thread Tension 3-14
Bedplate - Assembly 3-16
X-Axis Mechanism 3-20
Y-Axis Mechanism 3-22
R-Axis Mechanism 3-24
Race Assembly 3-26
Take-up Lower and Gimp 3-30
Trimming andCutting - Base 3-34
Main Shaft - Base 3-36
Covers Base 3-38
Lubrication (Head + Base) 3-40
Case - Assembly 3-42
Filter Regulator - Assembly 3-44
Valve Block 3-46
Electrobox 3-48
Embedded Assembly + Panel Kit Omron 3-50
Standard Accessories 3-52
Version AF ES-505 3-54
AF - Clampig - Assembly 3-56
Version CT ES-505 3-58
CT, LTT - Assembly 3-60
CT - Clamping - Assembly 3-62
Version LTT 3-64
Version LTT + Ultraflex 3-66
Ultraflex - Assembly 3-68
LTT - Assembly 3-70
LTT + Ultraflex - Clamping 3-72
RDE - Clamping Assembly 3-76
Thread Catcher - Assembly 3-78
Pedal 3-80

e-mail: service@amfreece.cz; parts@amfreece.cz; website: www.amfreece.com
Phone: +420 582 309 286; Fax: +420 582 360 606

COVERS HEAD

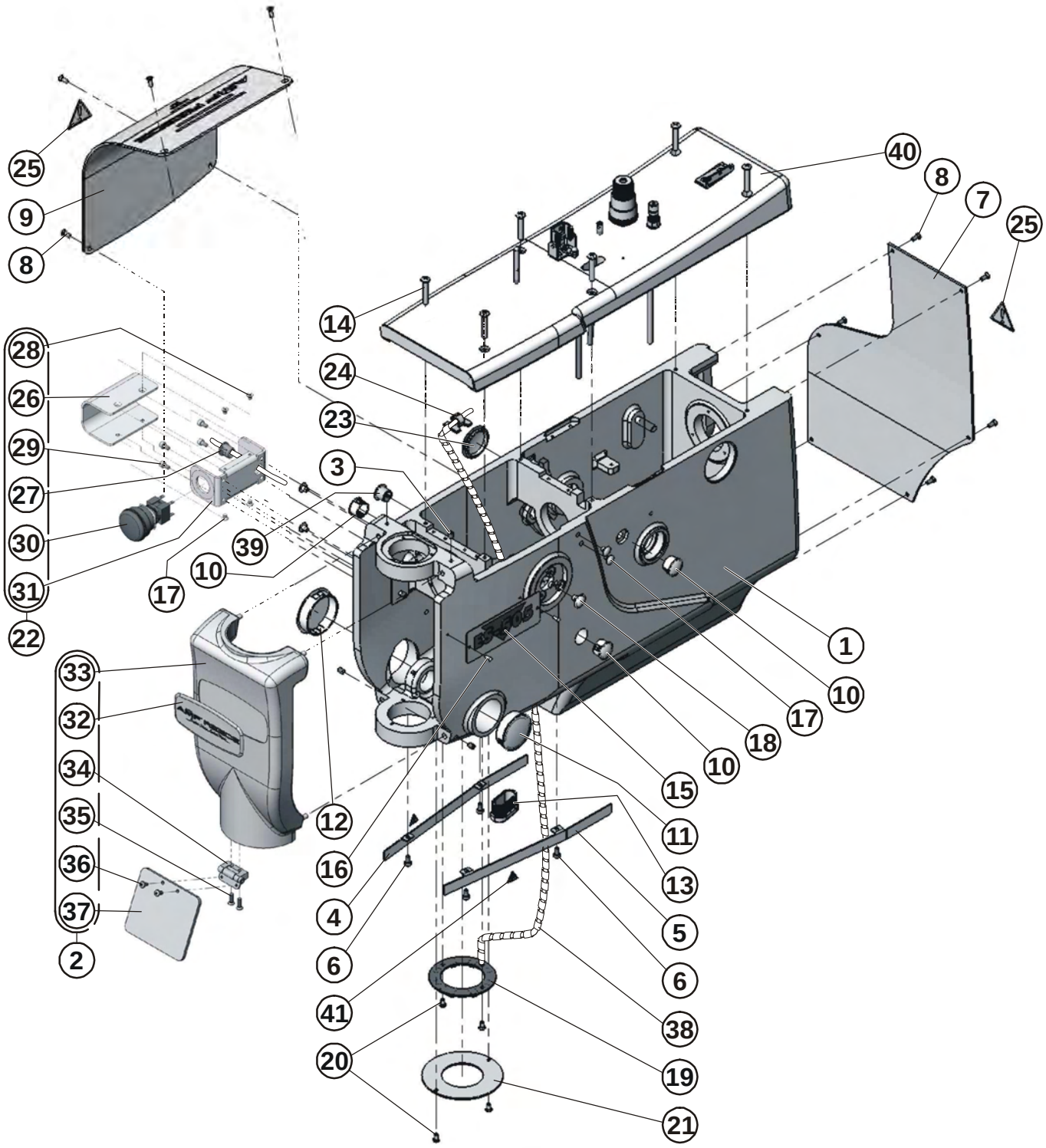
25
9
8
40
8
7
25
14
24
23
3
28
26
29
27
30
31
22
39
10
17
1
10
17
18
10
15
11
13
5
6
38
19
21
33
32
34
35
36
37
2
12
16
4
6
41
20

COVERS HEAD

DET	PART NUMBER	DESCRIPTION	QTY.
01	15.1001.1.700	HEAD ES-505	1
02	15.1401.0.050	FRONT COVER - ASSEMBLY	1
03	08.6400.4.006	SCREW M4-6	2
04	15.1407.0.800	BELT COVER-LEFT	1
05	15.1408.0.800	BELT COVER-RIGHT	1
06	08.6000.3.006	SCREW M3-6	4
07	15.1403.0.800	REAR COVER	1
08	15.1420.0.100	SCREW M3-8	10
09	15.1404.0.800	SIDE COVER	1
10	12.0010.6.902	PLUG	3
11	12.0010.6.903	PLUG	1
12	12.0010.6.904	PLUG	1
13	12.0008.6.992	PLUG	1
14	15.1421.0.100	SCREW M4-25	6
15	12.8000.1.032	LABEL S105	1
16	12.1016.0.000	RIVET	2
17	12.0010.4.094	PLUG M5	5
18	12.0008.4.571	PLUG 6,5	1
19	12.0010.4.184	LIGHT RING	1
20	15.1422.0.100	SCREW M3-5	4
21	15.1414.0.992	LED COVER	1
22	15.1405.0.050	EMERGENCY STOP COVER - ASSEMBLY	1
23	12.0010.6.905	PLUG	1
24	12.0008.4.862	CLIPS-METAL	1
25	17.0097.5.174	LABEL- WARNING	2
26	15.1406.0.800	COVER EMERGENCY STOP	(1)
27	12.0008.4.214	BUSHING	(1)
28	15.1424.0.100	SCREW	(4)
29	08.6000.3.006	SCREW	(4)
30	12.0010.4.191	EMERGENCY STOP	(1)
31	15.1405.0.800	HOLDER EMERGENCY STOP	(1)
32	12.8000.0.436	LABEL (AMFREECE) ACRYL	(1)
33	15.1401.0.700	FRONT COVER	(1)
34	15.1416.0.000	HINGE	(1)
35	15.1423.0.100	SCREW M3-10	(2)
36	15.1422.0.100	SCREW	(2)
37	15.1410.0.992	COVER PLEXI	(1)
38	SEE PAGE...	SPIRAL HOSE	1
39	12.0010.6.907	PLUG	1
40	SEE PAGE 3-14	TOP THREAD TENSION	1
41	12.8000.0.437	LABEL - DANGER INJURY	2

CUTTING

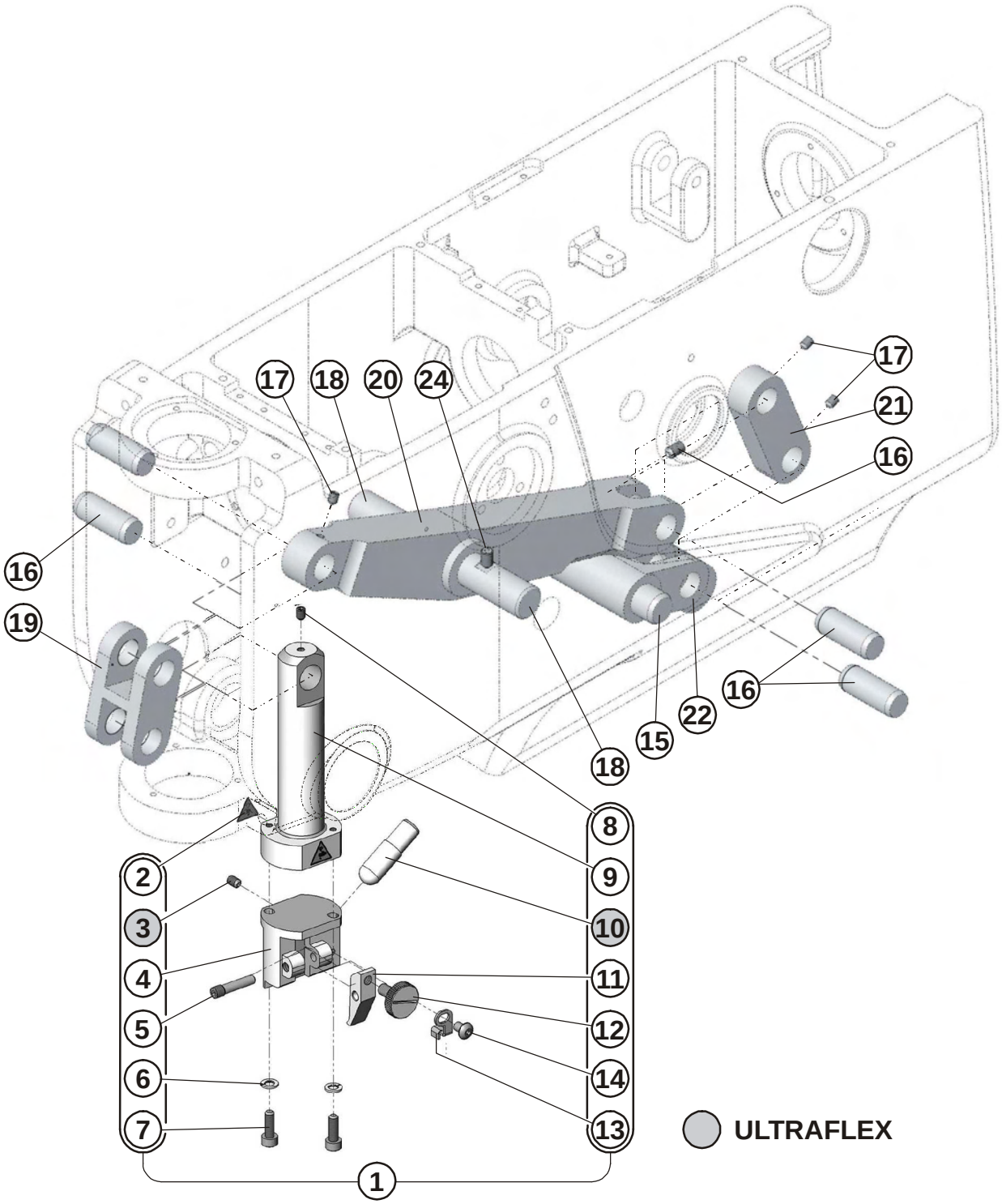
17
18
20
24
17
21
16
16
19
16
22
15
18
8
9
10
11
12
14
13
2
3
4
5
6
7
1
ULTRAFLEX

CUTTING

DET	PART NUMBER	DESCRIPTION	QTY.
01	15.5009.0.050	CUTTER - ASSEMBLY	1
02	12.8000.0.437	LABEL-DANGER INJURY	(2)
03	08.6400.4.006	SCREW M4-6	(1)
04	15.5009.0.600	CUTTER DRIVING HOLDER	(1)
05	15.5013.0.100	STUD	(1)
06	08.6802.4.000	WASHER 4,1	(2)
07	08.6000.4.012	SCREW M4-12	(2)
08	08.6400.4.004	SCREW M4-4	(1)
09	15.5008.0.300	CUTTER DRIVING SHAFT	(1)
10	15.5011.0.400	INSERT	(1)
11	15.5012.0.600	KNIFE HOLDER	(1)
12	15.5020.0.100	SCREW	(1)
13	15.5014.0.800	STOP	(1)
14	15.5009.0.050	SCREW M4-5	(1)
15	15.5006.0.300	SHAFT	1
16	12.1010.0.030	PIN 12h8-30	4
17	08.6400.4.004	SCREW M4-4	3
18	15.5005.0.300	SHAFT	1
19	15.5004.0.600	DRAW BAR	1
20	15.5001.0.600	CUTTING LEVER	1
21	15.5003.0.600	DRAW BAR	1
22	15.5002.0.600	LEVER	1
23	15.5009.0.050	CUTTER - ASSEMBLY	1
24	08.6400.5.008	SCREW M5-8	2
	ULTRAFLEX		

NEEDLE BAR AND TOP BEARING

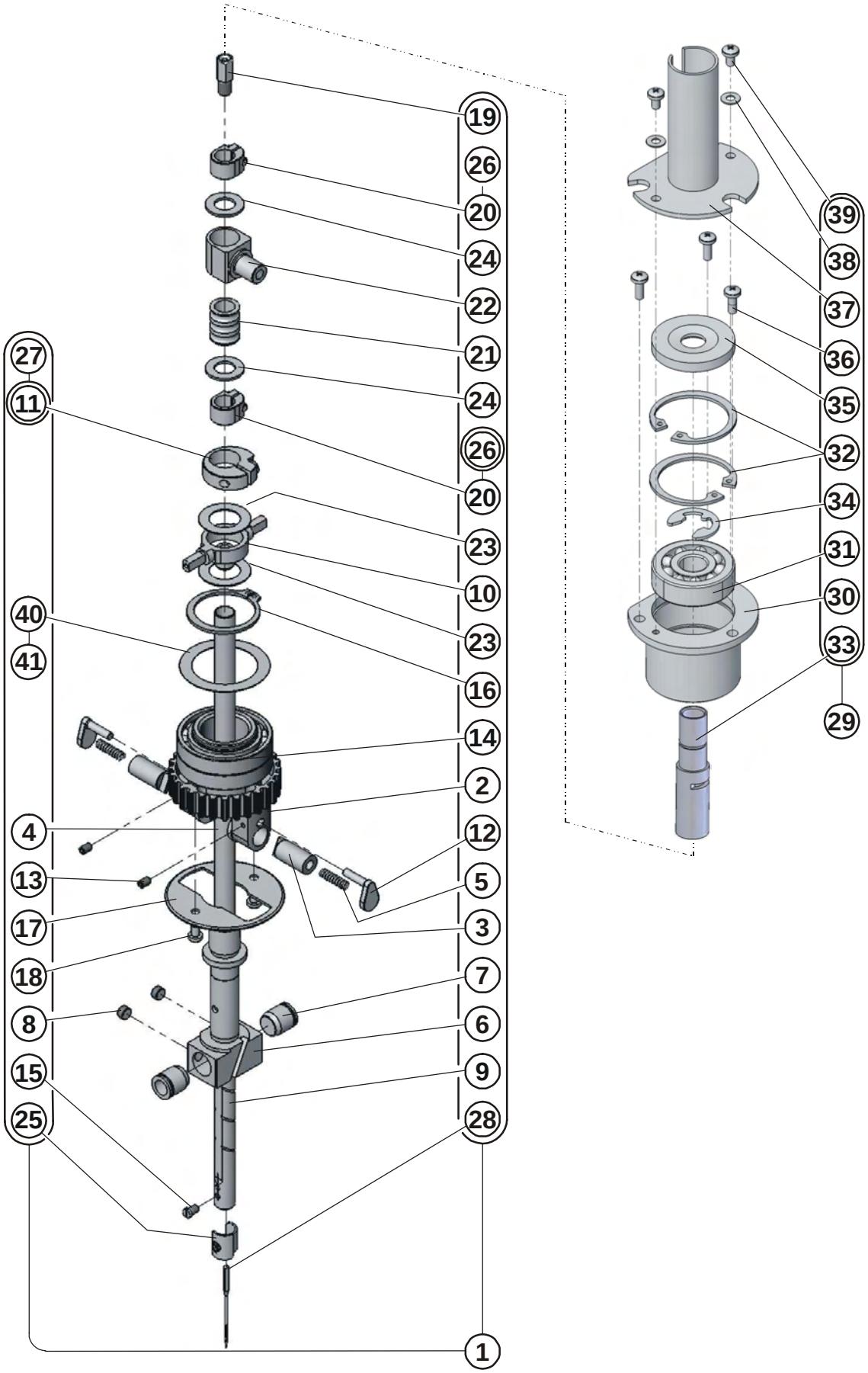

NEEDLE BAR AND TOP BEARING

DET	PART NUMBER	DESCRIPTION	QTY.
01	15.4001.0.050	NEEDLE BAR - ASSEMBLY	1
02	15.4002.0.500	GEAR TIMING BELT	(1)
03	17.0031.3.027	PIN	(2)
04	15.4019.0.400	WASHER	(2)
05	17.0026.1.084	SPRING	(2)
06	15.4003.0.400	GUIDE, NEEDLE BAR	(1)
07	14.1025.3.000	BUTTON UNI	(2)
08	18.0011.2.400	SCREW M5-0,5-3	(2)
09	15.4001.0.000	NEEDLE BAR	(1)
10	15.4009.0.400	GIMBAL HEAD	(1)
11	17.0043.6.351	COLLAR	(1)
12	10.1021.2.000	RETAINER SPRING	(2)
13	08.6400.3.005	SCREW M3-5	(2)
14	12.2010.0.024	BEARING	(2)
15	19.0011.1.401	SCREW	(1)
16	15.1422.0.100	RETAINING RING	(1)
17	15.4007.0.800	WASHER	(1)
18	15.1422.0.100	SCREW M3-5	(2)
19	14.1032.3.000	BUSHING N.B. UNI	(1)
20	15.1116.0.400	CLAMP	(2)
21	15.1114.0.400	BUSHING	(1)
22	15.1115.0.600	EYE	(1)
23	15.4017.0.800	WASHER	(2)
24	15.4020.0.400	WASHER	(2)
25	19.0082.1.414	THREAD GUIDE	(1)
26	15.1137.0.100	SCREWV	((2))
27	17.0012.0.543	SCREW	((1))
28	02.0579.1.111	NEEDLE	(1)
29	15.4010.0.050	TOP BEARING - ASSEMBLY	1
30	15.4005.0.400	BUSHING	(1)
31	12.2010.1.004	BEARING	(1)
32	12.1040.1.011	CIRCLIP	(2)
33	15.4006.0.400	BUSHING	(1)
34	12.1045.0.009	E-CLIP	(1)
35	15.4008.0.400	WASHER	(1)
36	15.1425.0.00	SCREW M3-8	(3)
37	15.1409.0.000	NEEDLE BAR GUARD	(1)
38	08.6852.3.000	WASHER M3	(2)
39	15.1422.0.100	SCREW M3-5	(2)
40	15.4021.0.800	DISTANCE WASHER 25 x 35 x 0,1	(1)
41	15.4022.0.800	DISTANCE WASHER 25 x 35 x 0,2	(1)

CRANK MECHANISM

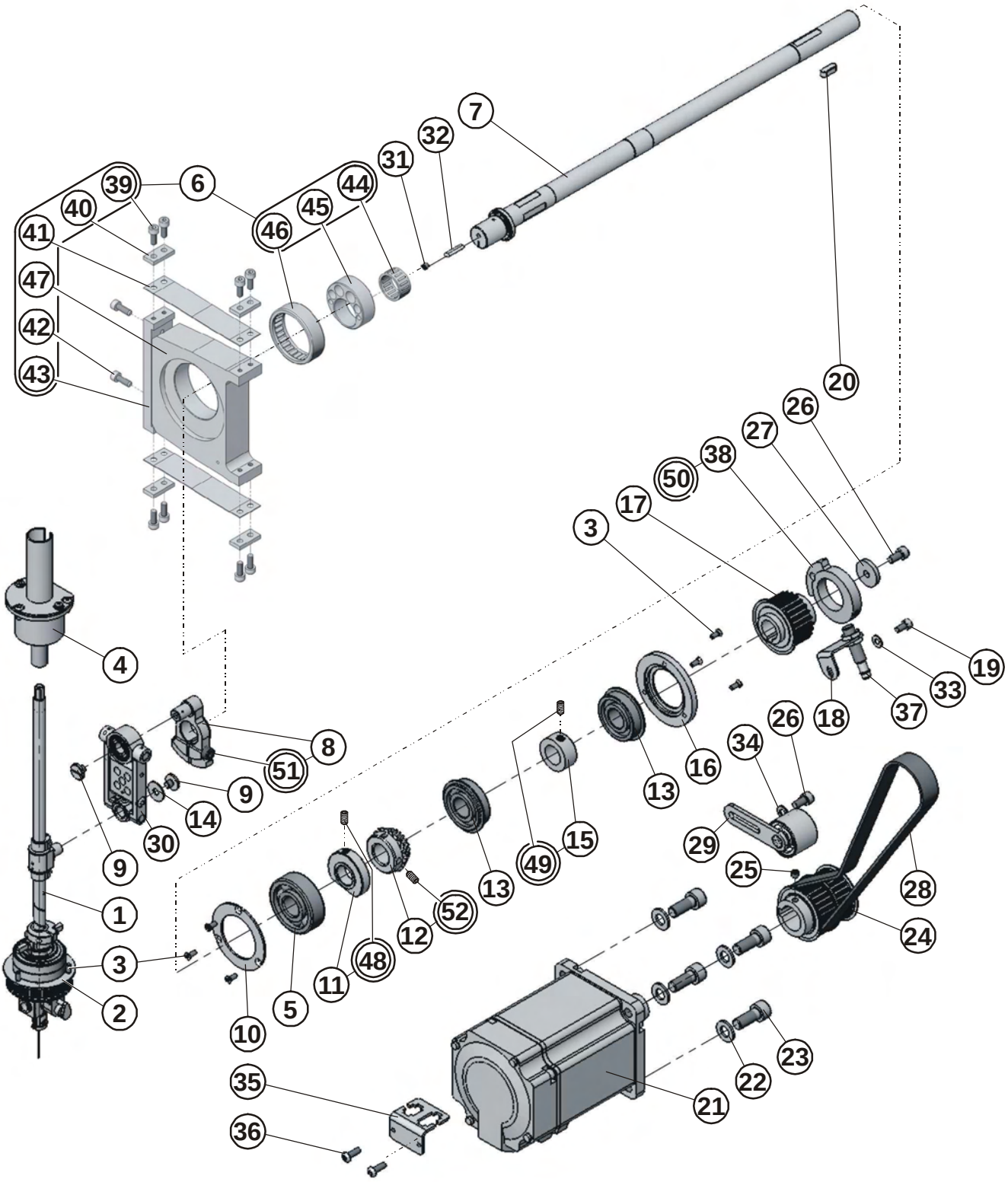

CRANK MECHANISM

DET	PART NUMBER	DESCRIPTION	QTY.
01	15.4001.0.050	NEEDLE BAR	1
02	15.4004.0.800	WASHER	1
03	15.1420.0.100	SCREW	9
04	15.4010.0.050	TOP BEARING - ASSEMBLY	1
05	01.7804.0.000	BEARING	1
06	15.1201.0.050	BALANCING MECHANISM	1
07	15.1101.0.300	SHAFT	1
08	15.1102.0.600	UPPER SHAFT CRANK	1
09	15.1117.0.100	SCREW	2
10	15.1138.0.800	WASHER	1
11	15.1205.0.400	RING	1
12	15.4426.0.500	GEAR	1
13	01.7805.0.000	BEARING	2
14	15.1142.0.400	WASHER 5/15	1
15	12.1050.0.001	CLAMP COLLAR	1
16	15.1108.0.400	BEARING COVER	1
17	15.1139.0.500	NEEDLE BAR DRIVE PULLEY	1
18	15.1123.0.800	SENSOR BRACKET	1
19	08.6000.4.008	SCREW M4-8	1
20	12.4030.0.514	KEY 5e9x5x14	1
21	15.1144.0.000	SERVOMOTOR	1
22	08.6850.8.000	WASHER 8	4
23	08.6000.8.420	SCREW M8x1-20	4
24	15.1140.0.500	MOTOR PULLEY	1
25	08.6400.5.005	SCREW M5-5	1
26	08.6000.5.010	SCREW M5-10	2
27	15.1146.0.400	WASHER	1
28	12.5050.2.027	BELT	1
29	15.1128.0.050	TENSION PULLEY	1
30	15.1110.0.050	NEEDLE BAR CRANK ASSEMBLY	1
31	08.6400.4.004	SCREW M4-4	1
32	15.1134.0.991	OIL WICK	1
33	08.6850.4.000	WASHER M4	1
34	08.6850.5.000	WASHER 5,3	1
35	15.1145.0.800	SERVO CABLE HOLDER	1
36	08.6202.4.010	SCREW M4-10	2
37	12.0010.4.093	SENSOR BQ 10	1
38	15.1143.1.400	SENSOR RING	1
39	08.6000.4.010	SCREW M4-10	(8)
40	15.1207.0.800	CLAMP	(4)
41	15.1211.0.800	FLAT SPRING FRONT	(2)
42	08.6000.4.012	SCREW M4-12	(2)
43	15.1209.0.600	SPRING BEAM	(1)
44	12.2050.0.010	BEARING	(1)
45	15.2004.0.400	ECCENTRIC	(1)
46	12.2050.1.013	BEARING	(1)
47	15.1201.0.600	COUNTERVEIGHT - FRONT	(1)
48	08.6400.5.010	SCREW	(1)
49	08.6400.6.006	SCREW	(1)
50	08.6850.5.000	WASHER 5,3	(1)
51	08.6000.5.025	SCREW	(1)

BITE ASSEMBLY

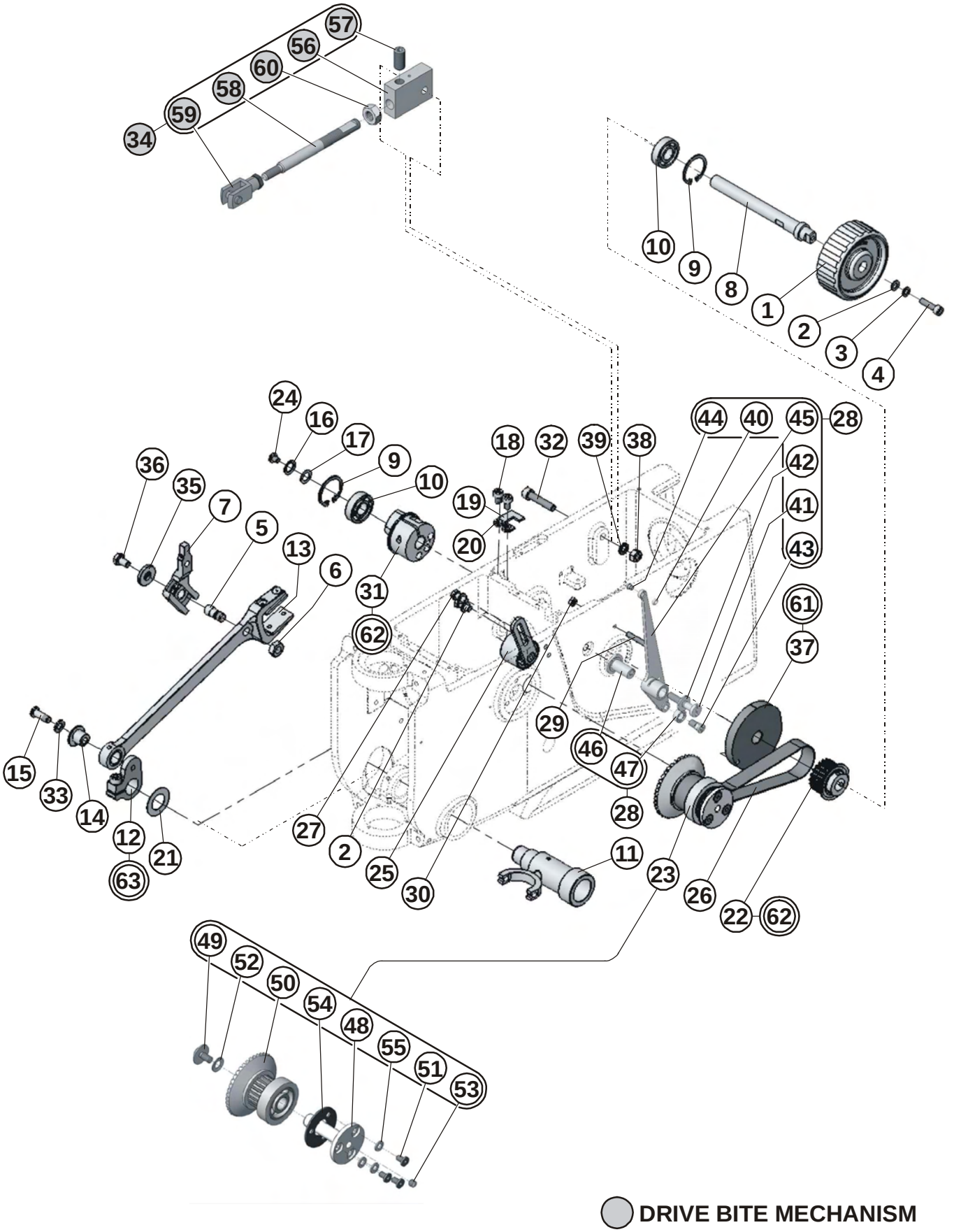

DRIVE BITE MECHANISM

BITE ASSEMBLY

DET	PART NUMBER	DESCRIPTION	QTY.
01	15.4409.0.400	HAND WHEEL	1
02	08.6850.5.000	WASHER 5,3	3
03	08.6802.5.000	SPRING WASHER M5	1
04	08.6000.5.020	SCREW M5-20	1
05	17.0033.1.109	SCREW	1
06	17.0016.1.190	NUT M8x1	1
07	15.4418.0.700	BRACKET	1
08	15.4404.0.300	SHAFT	1
09	12.1040.1.002	RETANING RING 28	2
10	12.2010.0.011	BEARING	2
11	15.4401.0.400	ZIGZAG DRIVING STUD	1
12	15.4402.0.600	ROCKING LEVER	1
13	15.4403.0.000	FORK LEVER	1
14	15.4439.0.400	ECCENTRIC	1
15	15.4440.0.100	CEP M6x0,75-12,5	1
16	08.6802.8.300	WASHER 8	1
17	24.4068.0.005	WASHER	1
18	08.6000.5.008	SCREW M5 x 8	2
19	15.4416.0.800	STOP	1
20	15.4417.0.800	STOP	1
21	08.6887.0.500	WASHER 0,5-16x28	1
22	15.4423.0.500	GEAR 20z	1
23	15.4427.0.050	GEAR ASSYEMBLY	1
24	08.6050.5.006	SCREW M5-6	1
25	15.1128.0.050	TENSION PULLEY	1
26	12.5050.2.026	BELT POLY CHAIN CARBON	1
27	08.6310.5.012	SCREW M5-12	2
28	15.4412.0.050	THREAD TAKE-UP LEVER ASSEMBLY	1
29	08.6420.4.030	SCREW M4x25	1
30	08.6700.4.000	NUT M4	1
31	15.4405.0.050	BITE CAM ASSEMBLY	1
32	08.6000.6.030	SCREW M6-30	1
33	08.6802.6.000	SPRING WASHER M6	1
34	03.5515.0.017	DRIVE BITE MECHANISM ASSEMBLY	1
35	15.4442.1.400	WASHER	1
36	08.6310.6.012	SCREW M6-12	1
37	15.4415.1.400	THREAD TAKE-UP CAM	1
38	08.6700.6.000	NUT M6	1
39	08.6800.6.000	WASHER 6	1
40	01.6551.0.000	O RING	(1)
41	15.4435.1.100	SCREW	(1)
42	17.0019.0.230	WASHER	(1)
43	15.4413.0.300	STUD	(1)
44	01.7447.1.000	GUIDE	(1)
45	15.4412.0.600	TAKÉ-UP LEVER	(1)
46	15.4421.0.400	BUSHING PIVOT	(1)
47	15.4431.0.400	ROLL O	(1)
	15.4423.0.400	ROLL 05	(1)
	15.4433.0.400	ROLL 10	(1)
	15.4434.0.400	ROLL 15	(1)

BITE ASSEMBLY

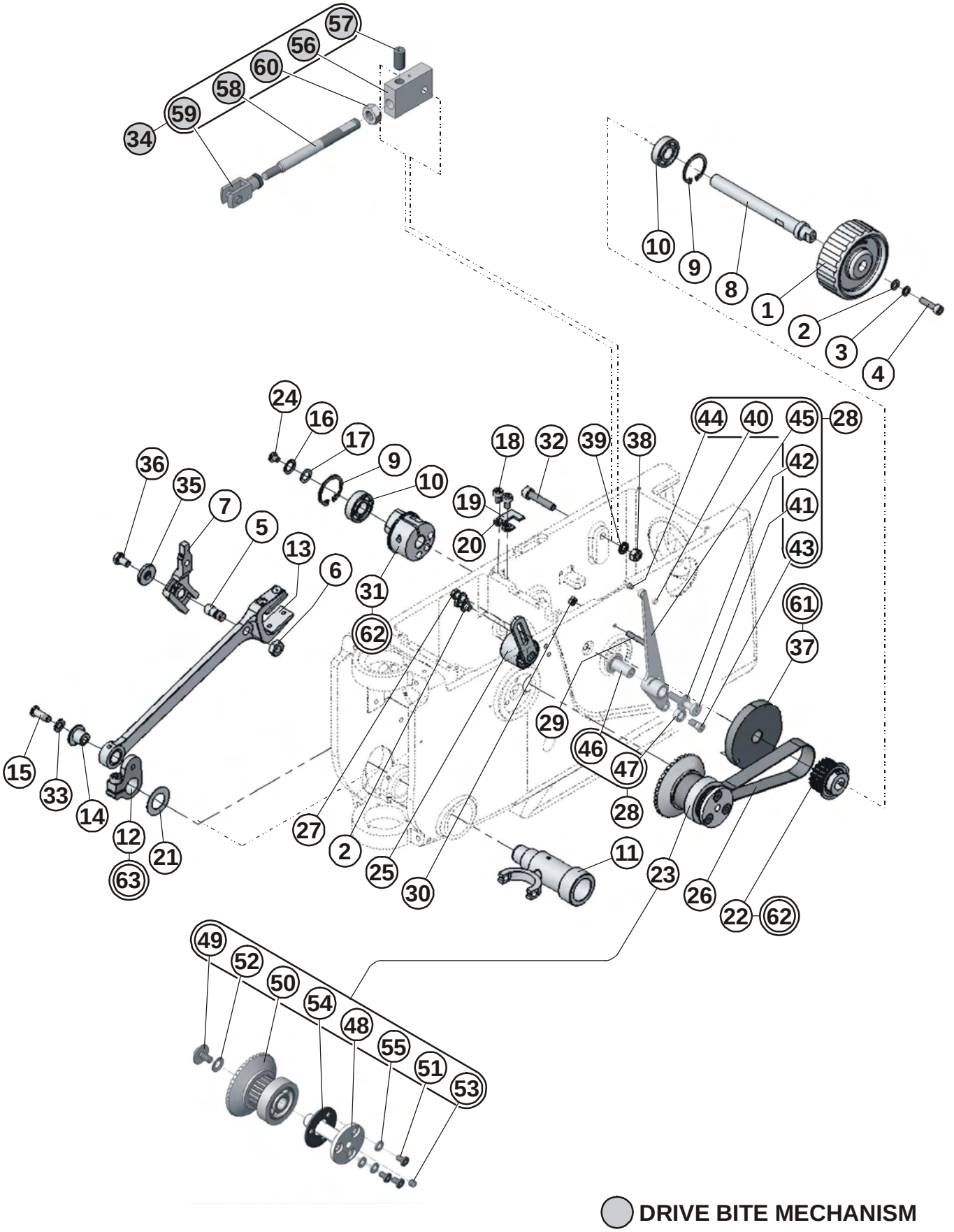

BITE ASSEMBLY



DET	PART NUMBER	DESCRIPTION	QTY.
48	15.4429.0.300	STUD	(1)
49	15.4428.0.100	SCREW	(1)
50	15.4427.0.000	GEAR SUBASSEMBLY	(1)
51	08.6050.5.008	SCREW M5-8	(3)
52	12.3015.7.016	DISC SPRINGS 14x7,2x0,5	(1)
53	17.0011.1.148	SET-SCREW	(1)
54	15.4437.0.990	WASHER	(1)
55	01.4549.0.000	WASHER	(3)
56	15.4420.0.600	BRACKET	(1)
57	08.6400.8.416	SCREW M8x1-16	(1)
58	15.4419.0.300	BITE SHAFT	(1)
59	12.0008.3.806	KNUCKLE	(1)
60	08.6700.8.000	NUT M8	(1)
61	08.6400.5.005	SCREW M5-5	(2)+(3)
62	08.6000.6.020	SCREW M6-20	(3)
63	08.6000.6.016	SCREW M6-16	(1)
		DRIVE BITE MECHANISM	

TOP THREAD TENSION

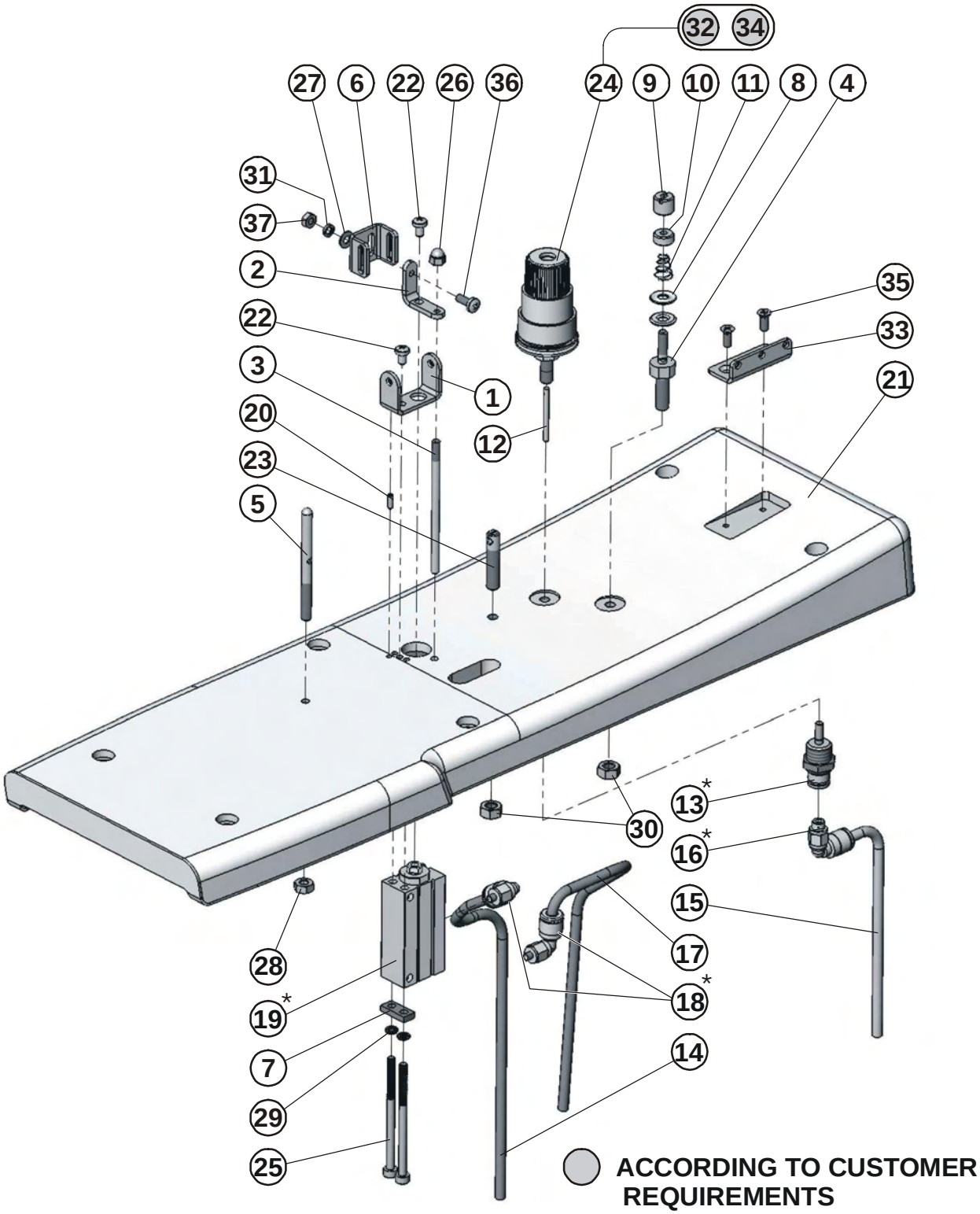

TOP THREAD TENSION

DET	PART NUMBER	DESCRIPTION	QTY.
01	15.1302.0.800	THREAD GUIDE	1
02	15.1303.0.800	HOLDER	1
03	15.2619.0.300	GUIDE BAR	1
04	15.1306.0.300	STUD	1
05	15.1313.0.100	THREAD GUIDE	1
06	15.1314.1.800	THREAD GUIDE	1
07	15.1316.0.800	WASHER	1
08	17.0082.8.017	TENSION DISC	2
09	19.0017.2.403	NUT	1
10	19.0017.2.404	NUT	1
11	17.0026.2.054	SPRING	1
12	12.1010.2.003	PIN 2m6-24	1
13	12.0008.3.413	CYLINDER	1
14	12.0008.3.416	AIR TUBE- J3B	1
15	12.0008.3.416	AIR TUBE - J4A	1
16	12.0008.3.411	CONNECTOR	1
17	12.0008.3.416	AIR TUBING - J3A	1
18	12.0008.3.746	CONNECTOR	2
19	12.0008.3.894	CYLINDER	1
20	12.1010.0.206	PIN 2-6	1
21	15.1402.1.700	TOP COVER	1
22	15.1422.0.100	SCREW M3-5	2
23	15.1317.0.300	THREAD GUIDE	1
24	15.1320.0.050	TENSION ASSEMBLY, LARGE	1
25	08.6000.3.050	SCREW M3-50	2
26	08.6722.3.000	NUT M3	1
27	08.6852.3.000	WASHER M3	1
28	08.6702.4.000	NUT M4	1
29	08.6800.3.000	WASHER 3	2
30	08.6700.5.000	NUT M5	2
31	08.6802.3.000	SPRING WASHER M3	1
32	17.0026.2.072	SPRING - CONCAL	(1)
33	17.0082.8.082	THREAD GUIDE	1
34	17.0082.8.082	TENSION DISC	(1)
35	15.1420.0.100	SCREW	2
36	15.1425.0.100	SCREW M3-8	1
37	08.6702.3.000	NUT M3	1
*		SEE PNEU	
		ACCORDING TO CUSTOMER REQUIREMENTS	

BEDPLATE ASSEMBLY

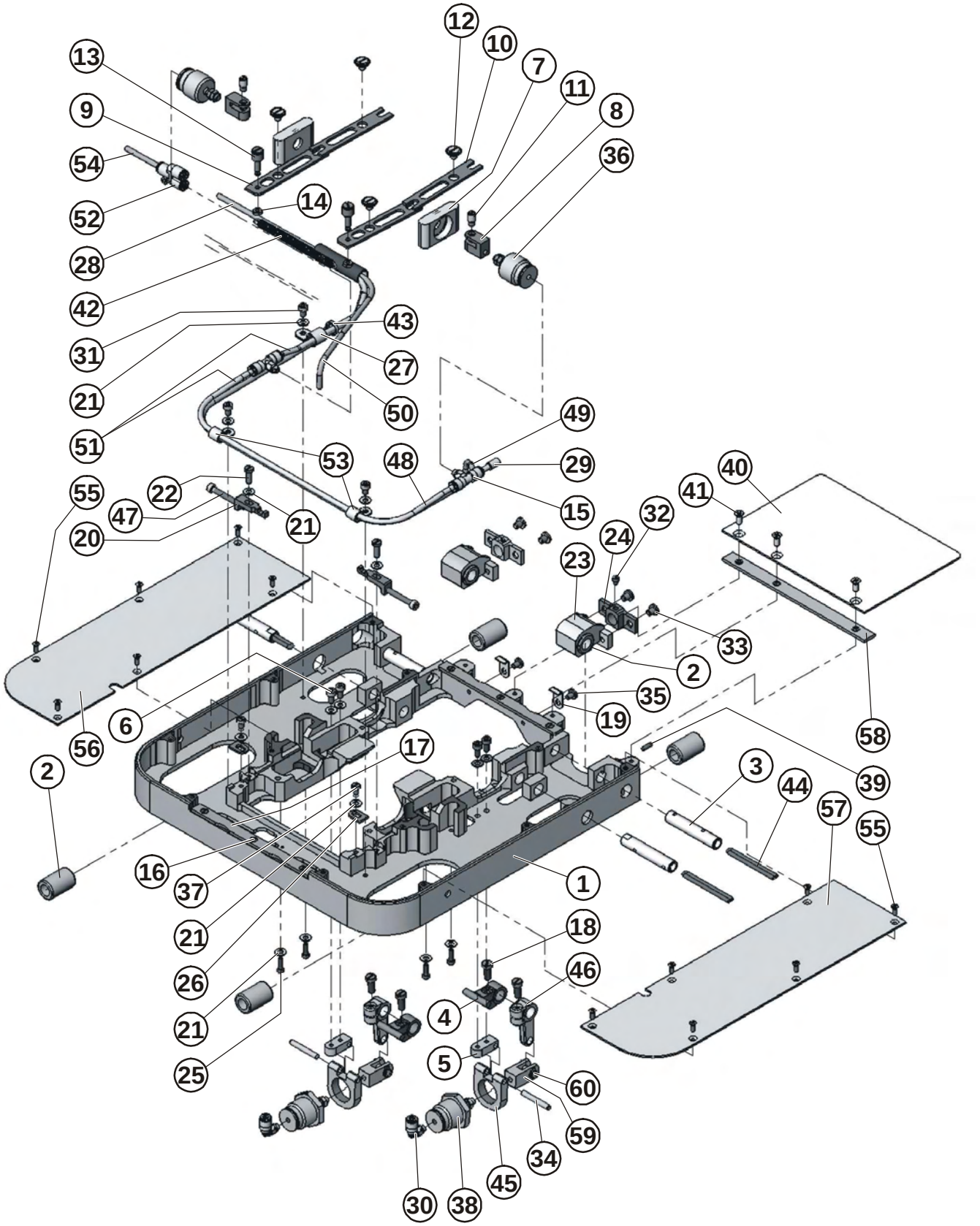

BEDPLATE ASSEMBLY

DET	PART NUMBER	DESCRIPTION	QTY.
01	15.2001.1.600	BEDPLATE ES-505	1
02	07.0000.0.024	BEARING	6
03	15.2010.0.300	SHAFT	4
04	19.0063.6.441	LEVER,CLAMP CONTROL	2
05	15.2019.0.600	CYLINDER BRACKET	2
06	08.6000.4.008	SCREW M4-8	4
07	15.2008.0.600	CYLINDER HOLDER	2
08	19.0064.8.409	KNUCKLE	2
09	15.2002.0.800	FORK LEVER , FRONT	2
10	15.2003.0.800	LEVER	2
11	19.0033.1.406	STUD	2
12	15.2022.0.100	SCREW	4
13	15.2004.0.300	SCREW SECURING	2
14	19.0016.1.402	NUT M4x0,5	2
15	12.0008.3.840	CONNECTOR	2
16	17.0012.6.110	SCREW M3-5	6
17	15.2005.0.800	CLAMP PLATE WASHER	2
18	08.6010.5.012	SCREW M5x12	4
19	15.2015.0.800	CLAMP PLATE HOLDER	2
20	15.2007.0.600	SLIDE ADJUST PLATE	2
21	08.6850.4.000	WASHER M4	15
22	17.0012.0.118	SCREW M4-12	2
23	15.2011.0.600	LINE PILLOW BLOCK	2
24	15.2012.0.600	SHAFT HOLDER	2
25	08.6000.3.010	SCREW M3-10	4
26	17.0081.5.047	STOP	2
27	07.6600.0.004	CLAMP CABLE	1
28	12.3011.0.010	SPRING	1
29	12.0008.3.426	PLUG	1
30	12.0008.3.411	CONNECTOR	2
31	08.6000.4.006	SCREW M4-6	3
32	17.0011.2.072	SCREW M5	2
33	08.6050.5.006	SCREW M5-6	4
34	12.1010.0.430	PIN 4x30	2
35	08.6050.4.006	SCREW M4-6	2
36	12.0008.3.734	CYLINDER	2
37	15.1428.0.100	SCREW M4-6	2
38	12.0008.3.841	CYLINDER	2
39	08.6400.4.010	SCREW M4-10	1
40	15.2016.1.800	COVER	1
41	15.1427.0.100	SCREW M4-10	3
42	15.2020.0.992	CABLE SLEEVE	1
43	12.0008.3.023	TY-WRAP	1
44	15.2021.0.991	OIL WICK	4
45	15.2013.0.600	CYLINDER HOLDER	2
46	15.2009.0.700	LEVER	2
47	08.6000.4.035	SCREW M4-35	2
48	12.0008.3.416	AIR TUBING- J2B1	1
49	12,00083416	AIR TUBING- J1A1	1
50	12.0008.3.416	AIR TUBING- J1A2	1

BEDPLATE ASSMEBLY

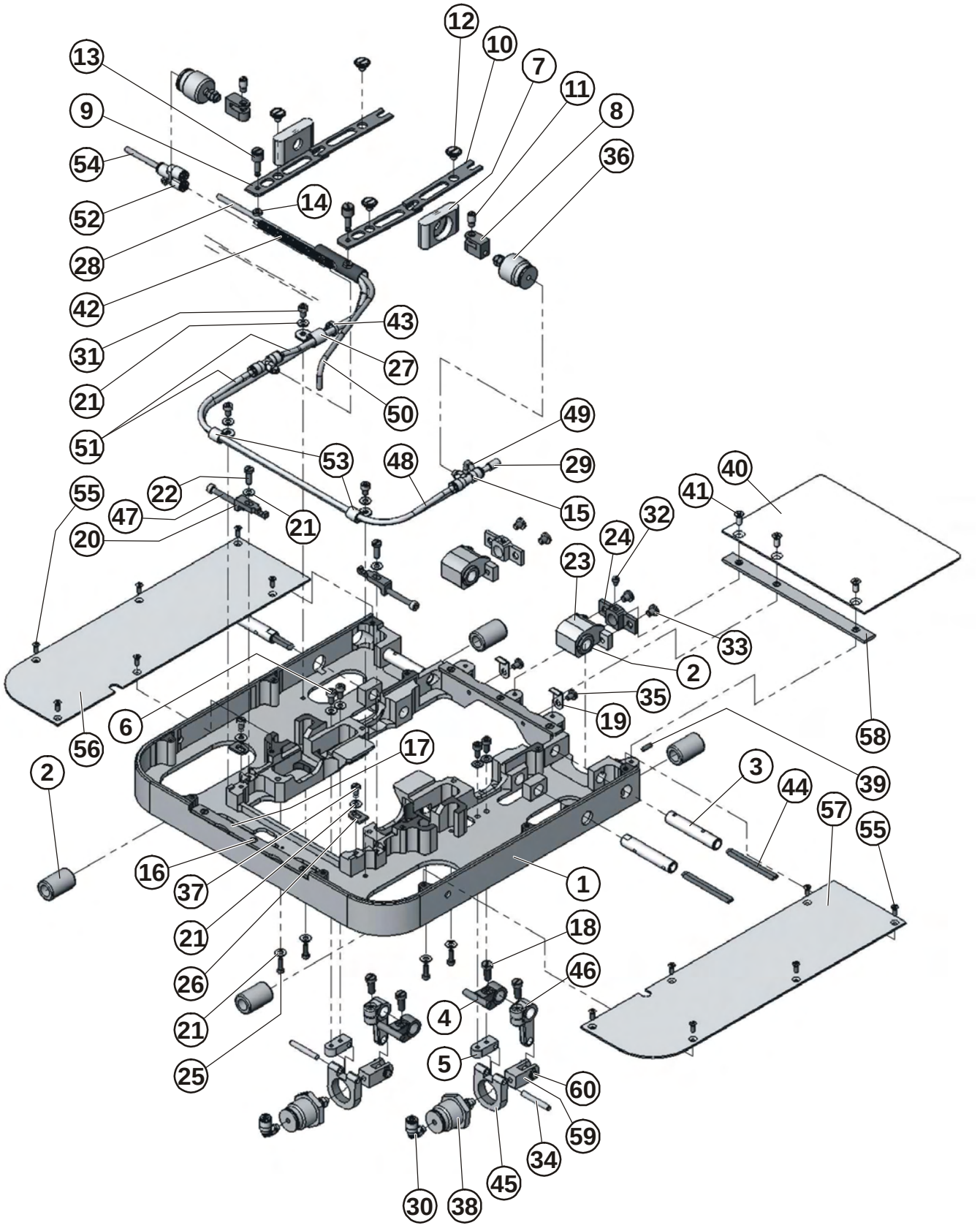

BEDPLATE ASSEMBLY



DET	PART NUMBER	DESCRIPTION	QTY.
51	12.0008.3.416	AIR TUBING J2B2	1
52	12.0008.3.736	CONNECTOR	1
53	12.0008.4.280	CLAMP CABLE	2
54	12.0008.3.416	AIR TUBE- J1A	1
55	15.1420.0.100	SCREW	12
56	15.2017.1.800	BEDPLATE COVER-LEFT	1
57	15.2018.1.800	BEDPLATE COVER RIGHT	1
58	15.2024.0.800	SHIM	1
59	15.2026.0.600	CYLINDER CLEVIS	2
60	12.0008.3.739	KNUCKLE	2

X - AXIS MECHANISM

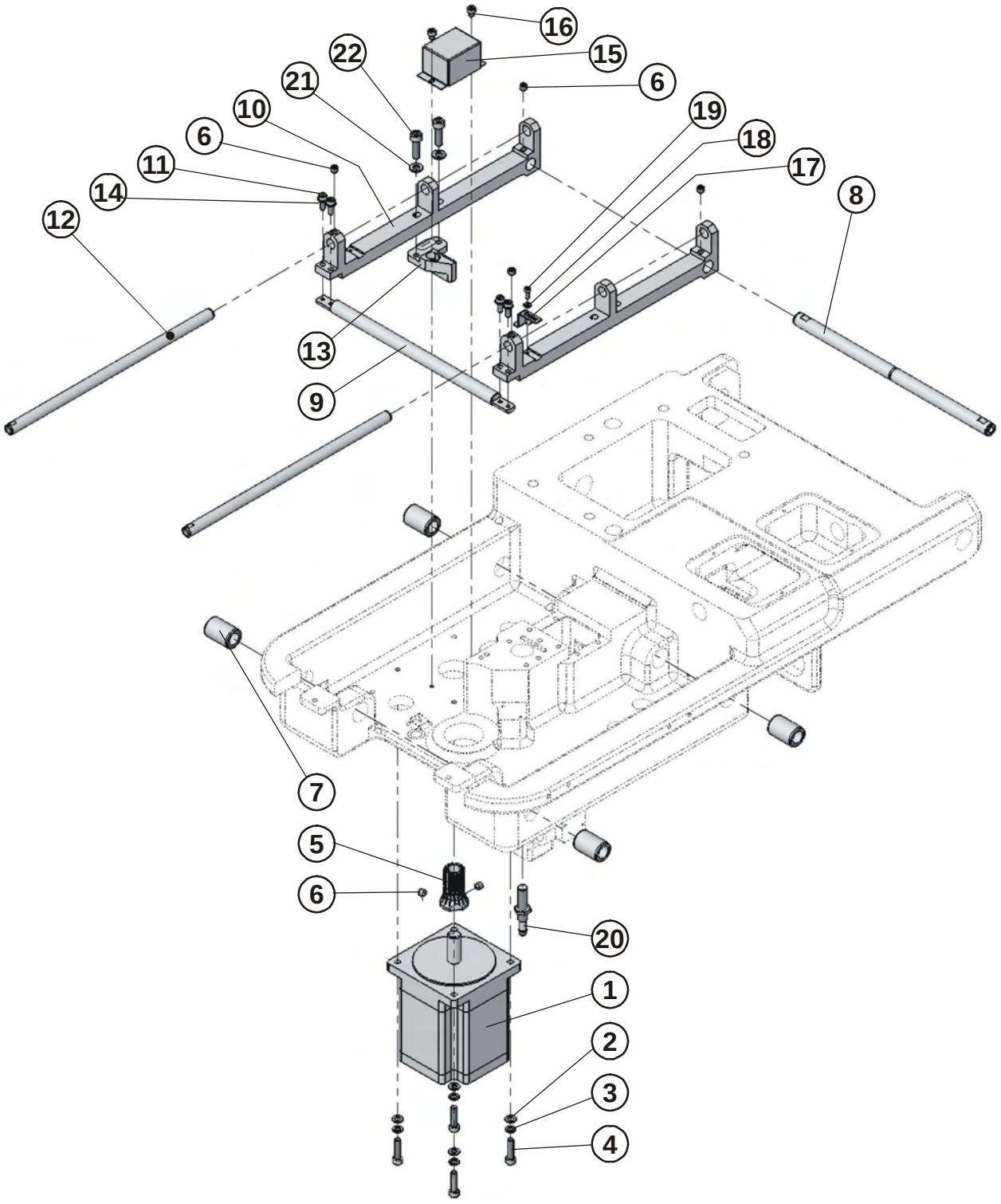

X - AXIS MECHANISM

DET	PART NUMBER	DESCRIPTION	QTY.
01	19.0007.9.462	STEPPER MOTOR - ASSEMBLY	1
02	08.6850.5.000	WASHER 5,3	4
03	08.6800.5.000	SPRING WASHER M5	4
04	08.6000.5.020	SCREW M5-20	4
05	15.3031.0.500	GEAR	1
06	08.6400.6.006	SCREW M6-6	6
07	12.2070.0.004	BEARING	4
08	15.3030.0.300	SHAFT BACK - X AXIS	1
09	15.3002.0.300	SHAFT FRONT - X AXIS	1
10	15.3004.0.600	HOLDER SHAFT	2
11	08.6000.4.012	SCREW M4-12	4
12	15.3011.0.300	SHAFT - Y AXIS	2
13	15.3006.0.600	RACK	1
14	08.6850.4.000	WASHER M4	4
15	15.3017.0.800	COVER	1
16	08.6000.4.005	SCREW M4-5	2
17	15.3029.0.800	SENSOR PLATE - X AXIS	1
18	08.6850.3.000	WASHER 3,2	1
19	08.6000.3.008	SCREW M3-8	1
20	12.0010.4.025	SENSOR	1
21	08.6850.6.000	WASHER 6,4	2
22	08.6000.6.020	SCREW M6-20	2

Y - AXIS MECHANISM

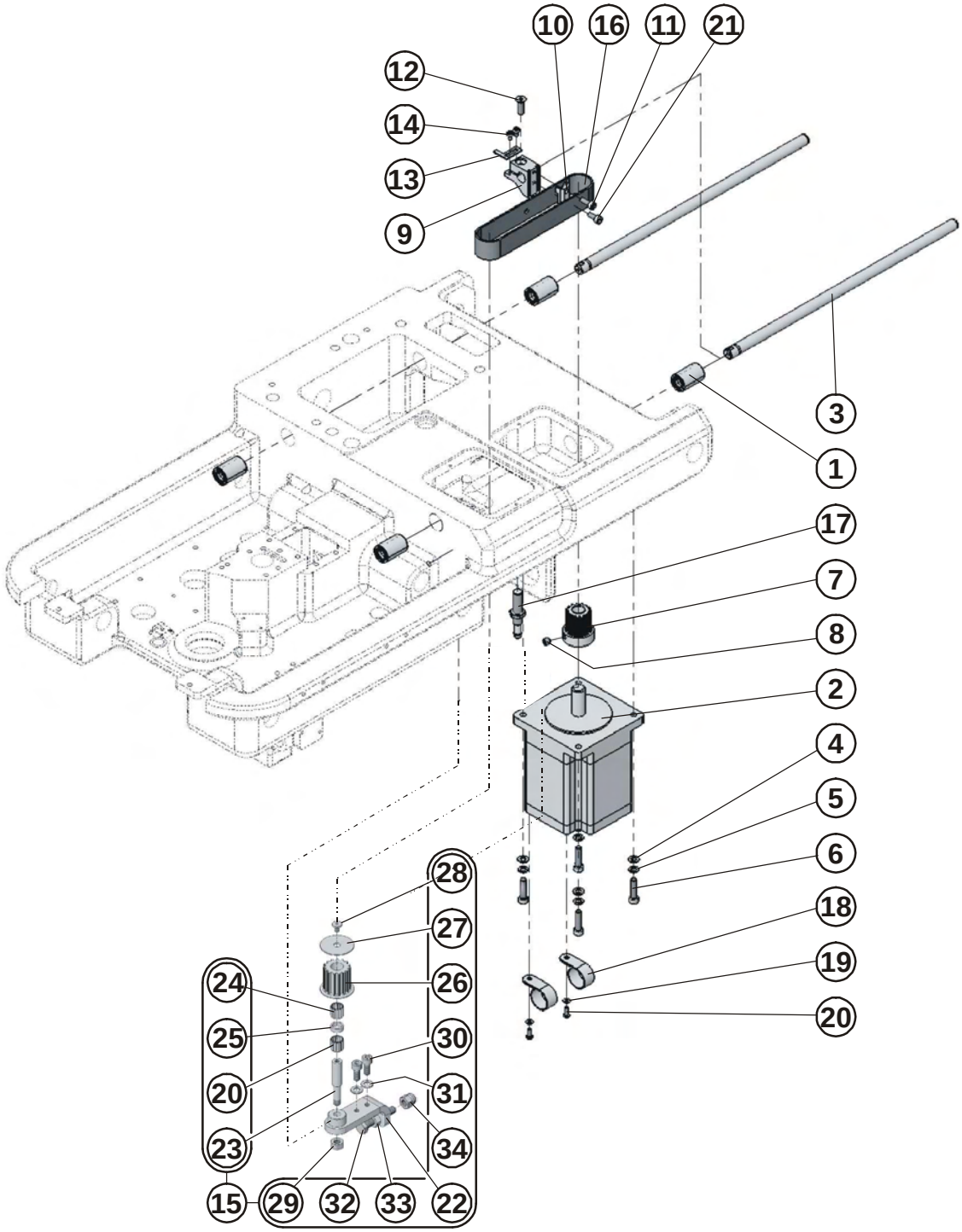

Y - AXIS MECHANISM

DET	PART NUMBER	DESCRIPTION	QTY.
01	07.0000.0.024	BEARING LBBR10-2LS	4
02	06.1500.0.022	STEPPER MOTOR ASSEMBLY- Y AXIS	1
03	15.3010.0.300	SHAFT 10h6	2
04	08.6850.5.000	WASHER 5,3	4
05	08.6800.5.000	SPRING WASHER M5	4
06	08.6000.5.020	SCREW M5-20	4
07	15.3034.0.500	MOTOR GEAR	1
08	08.6400.6.006	SCREW M6-6	2
09	15.3013.0.600	SHAFT HOLDER- Y AXIS	1
10	15.3014.0.600	BELT CLAMP-Y AXIS	1
11	08.6000.4.012	SCREW M4-12	1
12	08.6100.5.016	SCREW M5-16	1
13	15.3015.0.800	SENSOR PLATE- Y AXIS	1
14	08.6000.3.005	SCREW M3-5	2
15	15.3012.0.050	TENSION PULLEY-ASSEMBLY	1
16	15.3005.0.000	BELT	1
17	12.0010.4.025	SENSOR	1
18	12.0008.4.100	CLAMP	2
19	08.6852.3.000	WASHER M3	2
20	08.6032.3.008	SCREW M3-8	2
21	08.6000.4.010	SCREW M4-10	1
22	15.3012.0.800	TENSION PULLEY BRACKET	(1)
23	19.0033.5.403	SHAFT	(1)
24	12.2050.0.007	BEARING	(2)
25	19.0041.0.675	DISTANCE WASHER	(1)
26	15.3033.0.500	GEAR	(1)
27	19.0019.0.685	WASHER 4/24-1,5	(1)
28	08.6050.4.006	SCREW M4-6	(1)
29	08.6700.6.300	NUT M6x0,75	(1)
30	08.6000.5.012	SCREW M5-12	(2)
31	08.6850.5.000	WASHER 5,3	(2)
32	08.6310.6.035	SCREW M6-35	(1)
33	08.6700.6.000	NUT M6	(1)
34	08.6722.6.000	NUT M6	(1)

R - AXIS MECHANISM

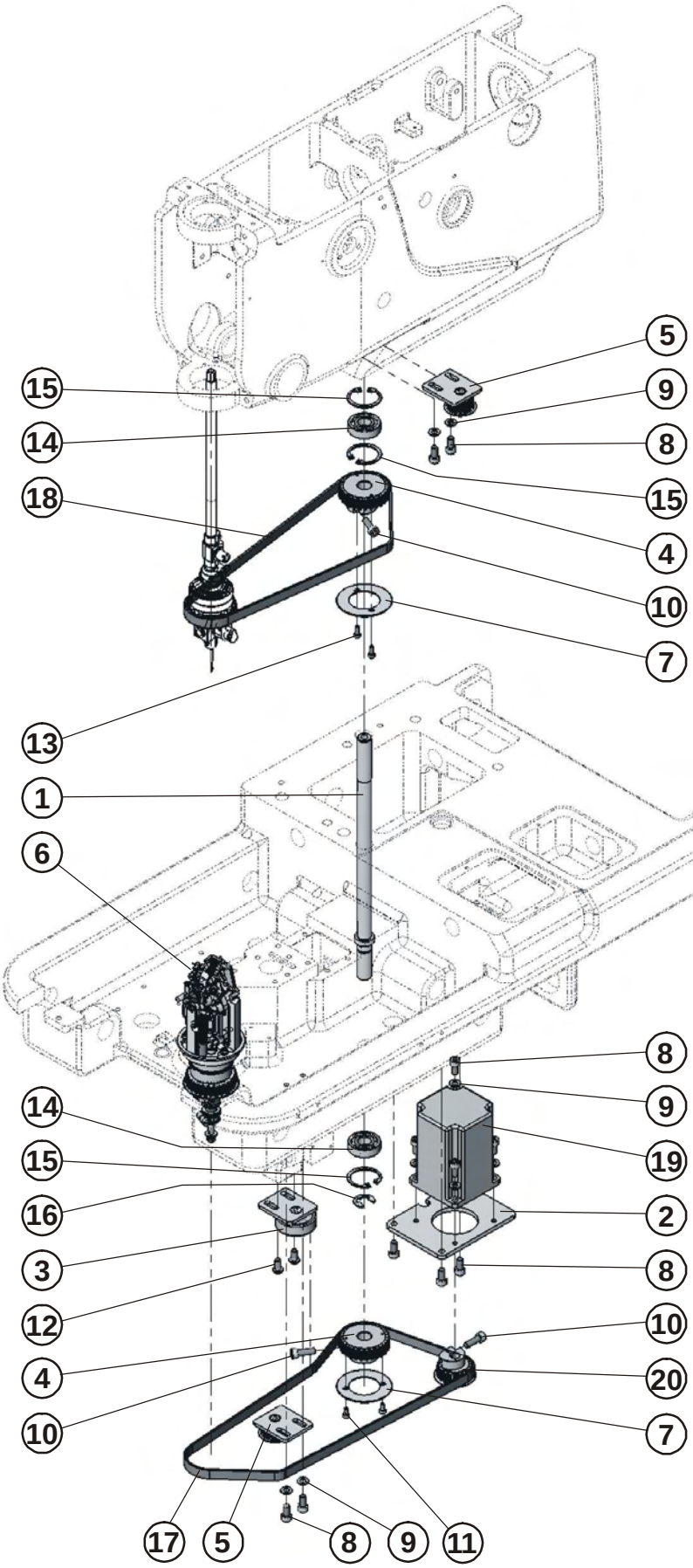

R - AXIS MECHANISM

DET	PART NUMBER	DESCRIPTION	QTY.
01	15.3019.0.300	SHAFT - R AXIS	1
02	15.3021.0.800	MOTOR BRACKET	1
03	15.3022.0.050	TENSION PULLEY	1
04	15.3035.0.500	R-AXIS GEAR	2
05	15.4011.0.050	TIMING PULLEY	2
06	15.4500.0.050	RACE ASSEMBLY	1
07	19.0019.0.682	WASHER	2
08	08.6000.5.010	SCREW M5-10	11
09	08.6850.5.000	WASHER 5,3	8
10	08.6000.5.016	SCREW M5-16	3
11	08.6000.3.006	SCREW M3-6	2
12	08.6050.5.010	SCREW M5-10	2
13	08.6000.3.008	SCREW M3-8	2
14	12.2010.0.011	BEARING	2
15	12.1040.1.002	RETANING RING 28	3
16	12.1045.0.009	E-CLIP 9	1
17	12.5050.2.021	BELT 700-GT3 5MGT-09 OIL RESISTANT	1
18	12.5050.2.019	BELT 600-GT3 5MGT-09	1
19	06.1500.0.023	STEPPER MOTOR ASSEMBLY - R AXIS	1
20	15.3020.1.500	R-AXIS MOTOR GEAR	1

RACE ASSEMBLY

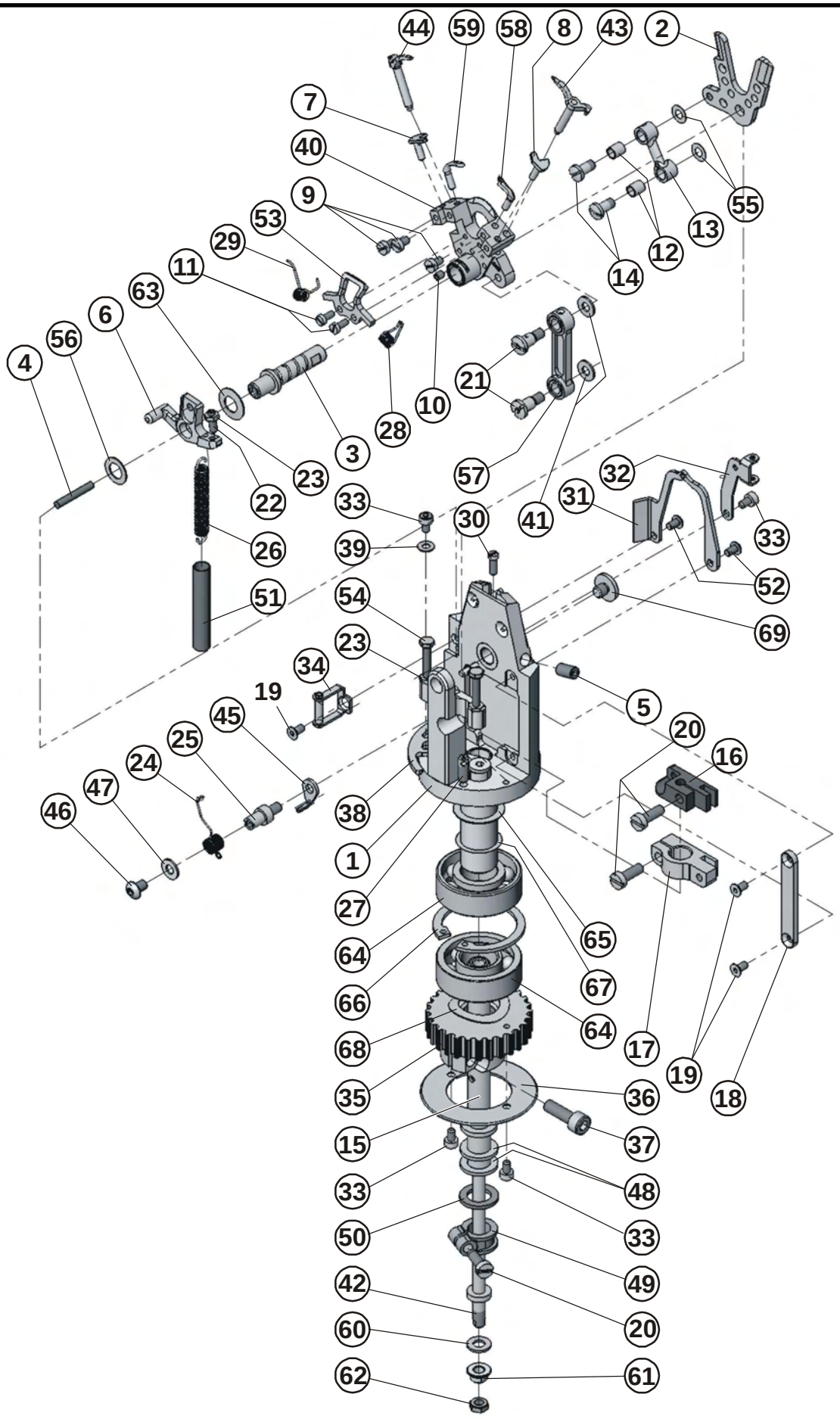

RACE ASSEMBLY

DET	PART NUMBER	DESCRIPTION	QTY.
01	15.4500.1.000	RACE ASSEMBLY	1
02	15.4501.1.800	SPREADER WEDGE	1
03	15.4502.0.400	LOOPER CARRIER STUD	1
04	15.4503.0.991	OIL WICK	1
05	08.6400.5.008	SCREW M5-8	1
06	15.4504.0.700	KNIFE HOLDER	1
07	19.0033.8.407	SPREADER STOP LH	1
08	19.0033.8.408	SPREADER STOP RH	1
09	17.0012.0.117	SCREW M3-5	3
10	15.4548.0.100	SCREW M3-4	1
11	17.0012.0.404	SCREW	2
12	15.4555.0.400	BUSHING	2
13	15.4506.0.700	SPREADER LINK	1
14	15.4549.0.100	SCREW	2
15	15.4507.0.400	SHAFT LOOPER DRIVE	1
16	15.4509.0.600	CLAMP	1
17	15.4510.0.600	LOOPER CLAMP SHAFT	1
18	15.4512.0.800	GUIDE	1
19	08.6100.3.006	SCREW M3-6	3
20	17.0012.0.118	SCREW M4-12	3
21	15.4514.0.050	LOOPER CARRIER STUD	2
22	08.6400.3.010	SCREW M3-10	1
23	08.6710.3.000	NUT M3	3
24	15.4519.0.200	SPRING	1
25	15.4520.0.300	STUD	1
26	12.3011.0.011	SPRING	1
27	15.4521.0.300	STUD	1
28	15.4530.0.200	SPRING TORSION - RH	1
29	15.4531.0.200	SPRING - TORSION LH	1
30	17.0012.2.400	SCREW	1
31	15.4522.0.800	GIMP THREAD GUIDE	1
32	15.4523.0.800	GIMP THREAD GUIDE	1
33	08.6000.3.005	SCREW M3-5	4
34	15.4525.0.000	LOWER THREAD GUIDE	1
35	15.3036.1.500	GEAR,TIMING BELT	1
36	19.0019.0.682	WASHER	1
37	08.6000.5.016	SCREW M5-16	1
38	15.4526.0.800	SENSOR PLATE - R AXIS	1
39	08.6852.3.000	WASHER M3	1
40	15.4505.0.600	CARRIER LOOPER	1
41	17.0019.1.088	WASHER	2
42	15.4508.0.400	SHAFT	1
43	17.0004.9.894	SPREADER RIGHT	1
44	17.0004.9.895	SPREADER LEFT	1
45	15.4532.0.800	PLATE	1
46	08.6200.4.006	SCREW M4-6	1
47	08.6850.4.000	WASHER M4	1
48	19.0019.0.686	WASHER	2
49	19.0043.6.441	CLAMP	1
50	15.4537.0.990	RUBBER WASHER	1

RACE ASSEMBLY

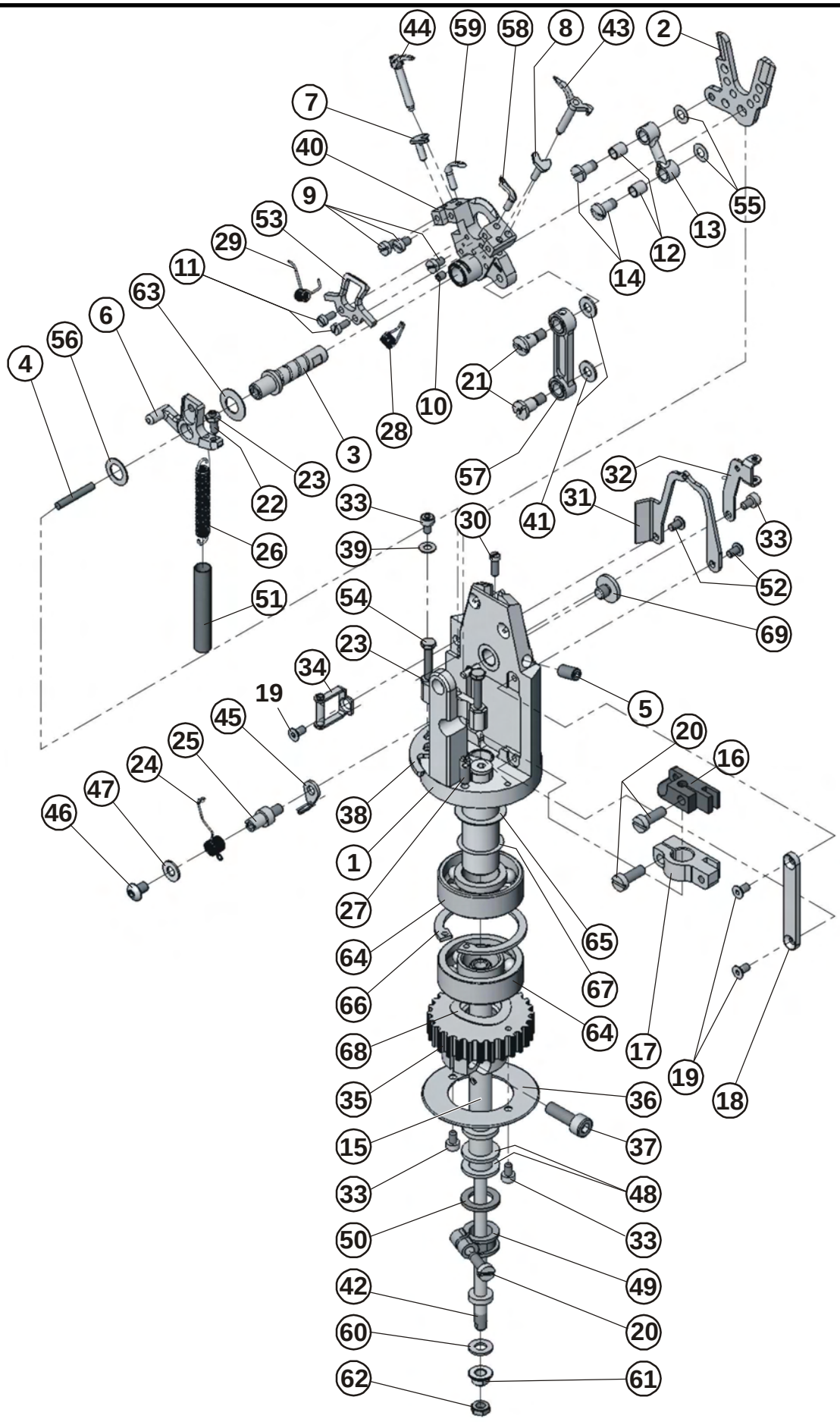

RACE ASSEMBLY



DET	PART NUMBER	DESCRIPTION	QTY.
51	15.4539.0.990	SPRING COVER	1
52	08.6200.3.005	SCREW M3-5	2
53	17.0082.5.898	NEEDLE GUARD	1
54	08.6310.3.016	SCREW M3 x 16	2
55	17.0019.0.228	WASHER	2
56	15.4541.0.800	WASHER 7,1/12-0,5	1
57	15.4511.0.600	LOOPER LINK	1
58	03.7011.0.000	BLIND LOOPER - RIGHT	1
59	03.7011.0.100	EYE LOOPER - LEFT	1
60	08.6887.5.000	WASHER 5	1
61	15.4545.0.400	NUT M5x0,5	1
62	17.0016.1.054	NUT M5x0,5-2,5	1
63	12.3015.7.016	DISC SPRINGS 14x7,2x0,5	1
64	12.2010.0.032	BEARING	2
65	08.6887.0.501	DISTANCE WASHER 0,5x15x21	1
66	12.1040.1.012	RETAINING RING 32	1
67	17.0019.0.226	WASHER	3
68	01.5683.0.000	DISC SPRING 5/8	1
69	15.1117.0.100	SCREW	1

TAKE-UP LOWER AND GIMP

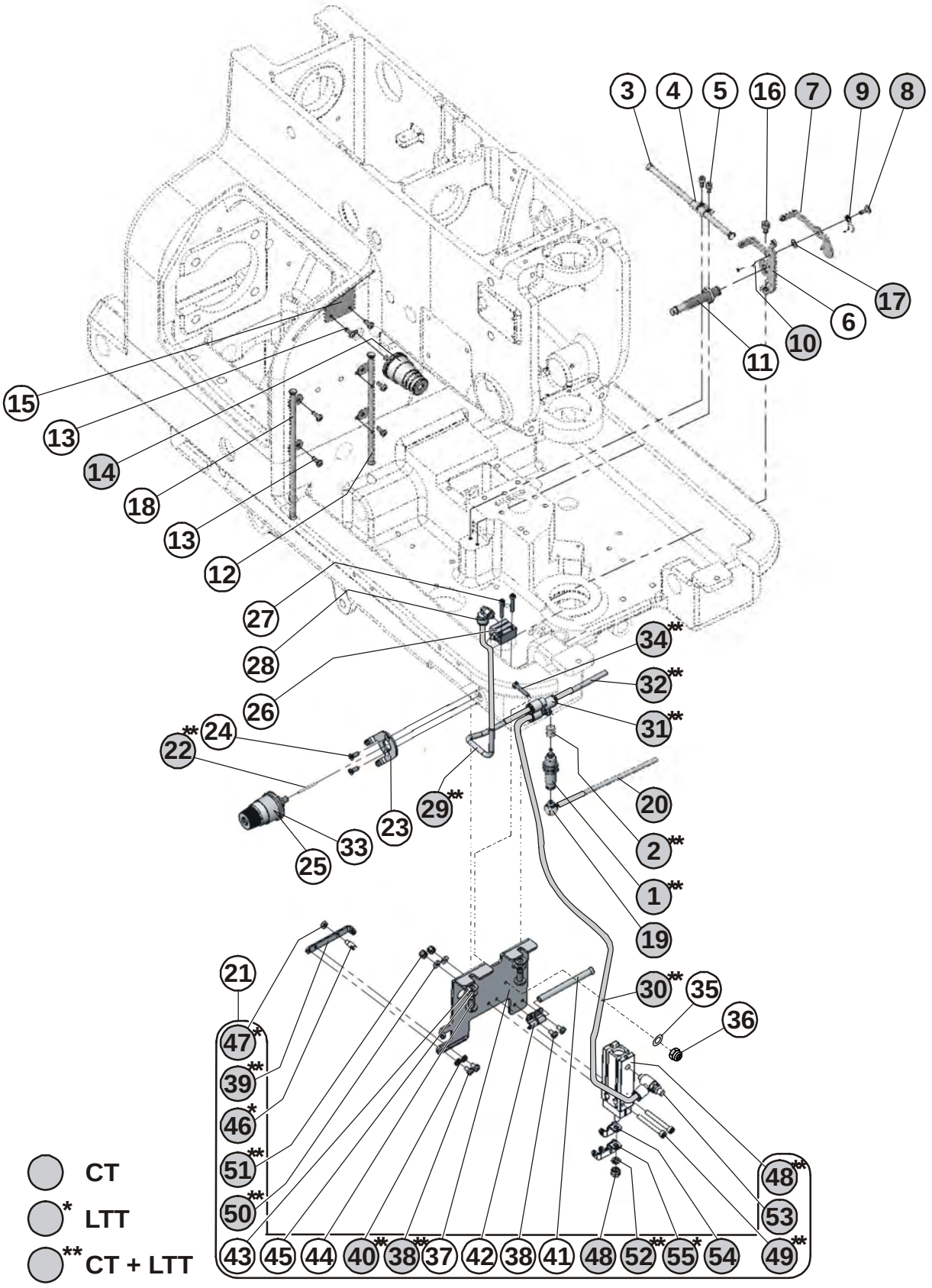

TAKE-UP LOWER AND GIMP

DET	PART NUMBER	DESCRIPTION	QTY.
01	12.0008.3.851	PNEUM.CYLINDER CJB6-15	1
02	15.3219.0.100	NUT	1
03	15.3210.0.400	GIMP GUIDE	1
04	15.3205.0.800	CLAMP	2
05	08.6000.3.006	SCREW M3-6	2
06	15.3212.1.800	GIMP HOLDER	1
07	15.3213.0.800	GIMP TAKE-UP LEVER	1
08	15.3214.0.100	SCREW	1
09	15.3215.0.200	SPRING	1
10	08.6710.3.000	NUT M3	1
11	12.0010.4.025	SENSOR	1
12	15.3210.0.000	GIMP THREAD GUIDE	1
13	15.1425.0.100	SCREW M3-8	6
14	24.0119.0.050	TENSION ASSEMBLY, LARGE	1
15	15.1307.0.800	THREAD GUIDE	1
16	08.6000.4.006	SCREW M4-6	1
17	17.0019.0.228	WASHER	1
18	15.3216.0.000	LOWER THREAD GUIDE	1
19	12.0008.3.444	CONTROLLER M-5ALU-4	1
20	12.0008.3.416	AIR TUBE - J6B	1
21	15.3200.1.050	TAKE-UP LOWER THRD. ASSEMBLY	1
22**	15.3206.0.300	PIN 2x21	1
23	15.3207.0.800	LOWER THREAD GUIDE	1
24	15.1420.0.100	SCREW	2
25	15.1320.0.050	TENSION ASSEMBLY, LARGE	1
26**	12.0008.3.630	CYLINDER CUJB4-4S	1
27**	08.6000.7.016	SCREW M2,5-16	2
28**	12.0008.3.746	CONNECTOR	1
29	12.0008.3.416	AIR TUBE - J5A2	1
30**	12.0008.3.416	AIR TUBE - J5A1	1
31**	12.0008.3.736	CONNECTOR	1
32**	12.0008.3.416	AIR TUBE - J5A	1
33	17.0026.2.078	SPRING - CONCAL	1
34**	08.6032.3.016	SCREW M3-16	1
35**	08.6852.3.000	WASHER M3	1
36**	08.6733.3.000	NUT M3	1
37	15.3200.1.800	HOLDER	(1)
38	08.6032.3.005	SCREW M3-5	(2)
38**	08.6032.3.005	SCREW M3-5	(2)
39**	15.3202.0.800	LOWER THREAD GUIDE	(1)
40**	08.6802.3.000	SPRING WASHER M3	(2)
41	15.3204.0.400	TUBE GUIDE	(1)
42	15.3205.0.800	CLAMP	(2)
43	08.6852.5.000	WASHER 5,3	(2)
44	08.6032.5.010	SCREW M5-10	(2)
45	08.6802.5.000	SPRING WASHER M5	(2)
46	15.3217.0.100	THREAD GUIDE	(1)
47*	08.6712.3.000	NUT M3	(1)
48	12.0010.3.001	CYLINDER	(1)
49**	08.6002.3.030	SCREW M3-30	(2)

TAKE-UP LOWER AND GIMP

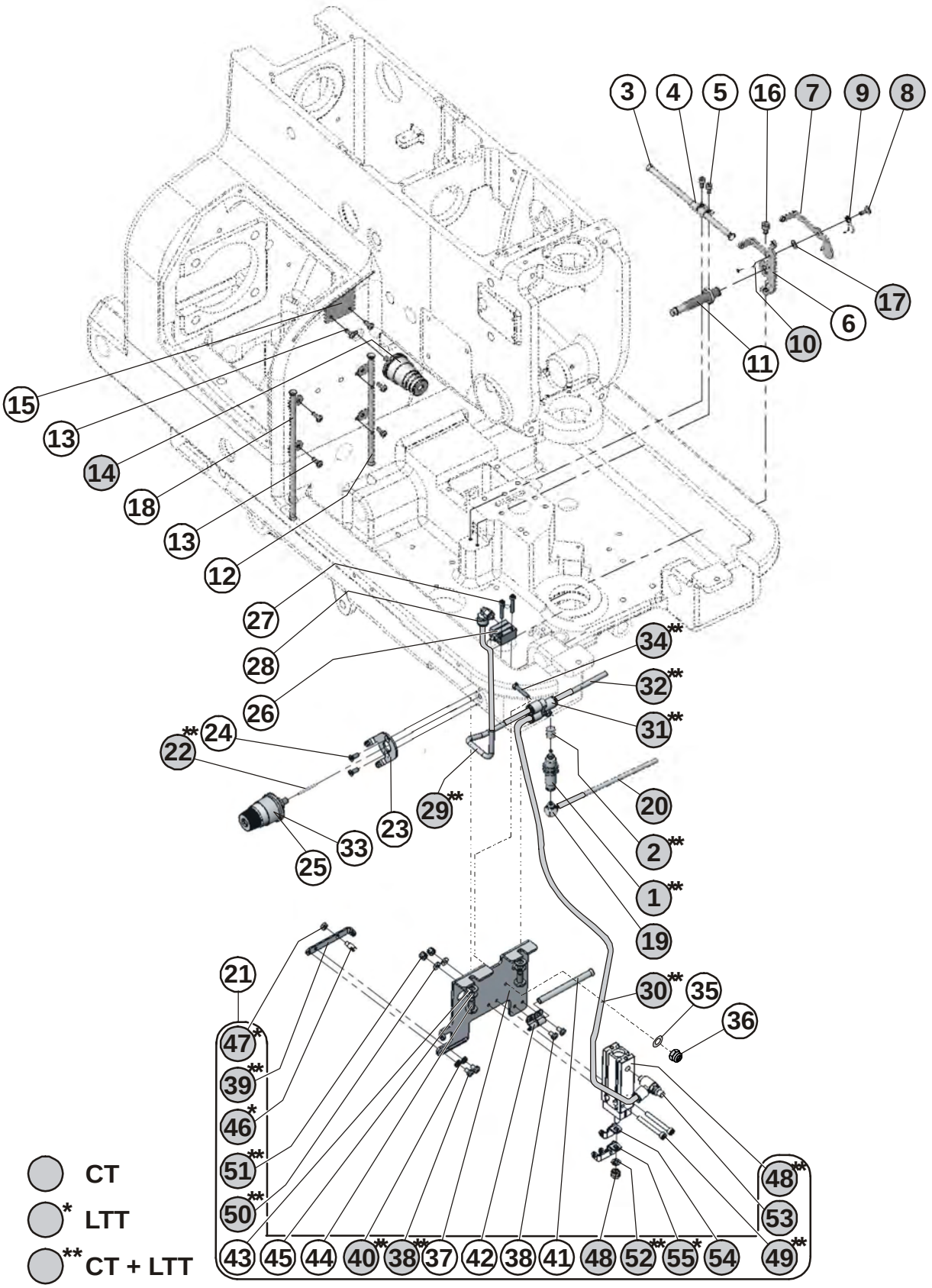

TAKE-UP LOWER AND GIMP



DET	PART NUMBER	DESCRIPTION	QTY.
50**	08.6852.3.000	WASHER M3	(2)
51**	08.6733.3.000	NUT M3	(2)
52**	08.6802.4.000	SPRING WASHER M4	(1)
53	12.0008.3.860	SPEED CONTROLLER	(1)
54	15.3201.1.800	TAKE-UP LEVER CT	(1)
55*	15.3220.0.000	TAKE-UP LEVER LTT	(1)

	CT
*	LTT
**	CT + LTT

TRIMMING AND CUTTING - BASE

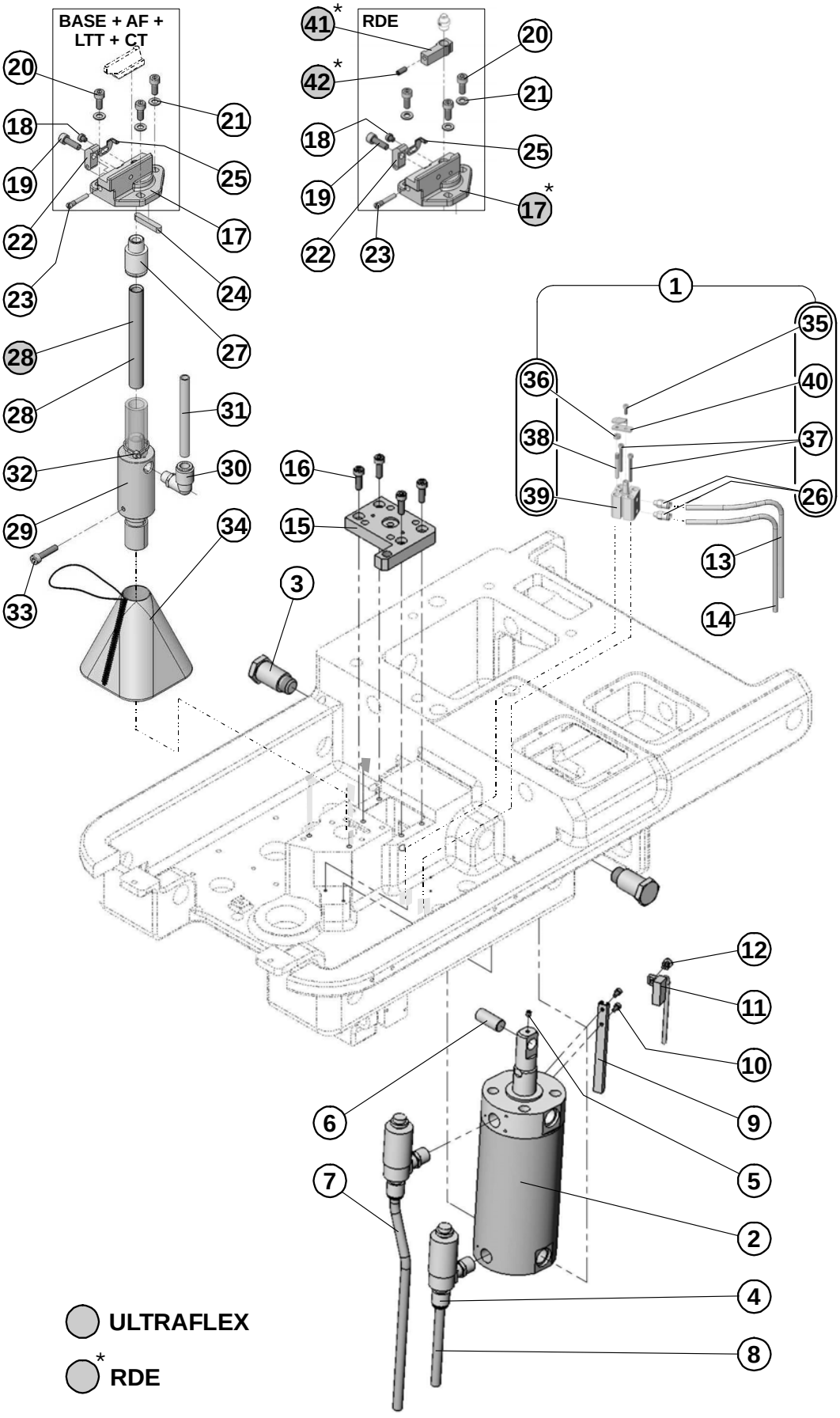

Revised 07/2012
e-mail: service@amfreece.cz; parts@amfreece.cz; website: www.amfreece.com
Phone: +420 582 309 286; Fax: +420 582 360 606

TRIMMING AND CUTTING - BASE

DET	PART NUMBER	DESCRIPTION	QTY.
01	15.3016.0.050	UPPER THREAD TRIMM - ASSEMBLY	1
02	15.7001.0.000	CYLINDER	1
03	19.0014.3.405	PIVOT	2
04	12.0008.3.820	EXHAUST SPEED CONTR.	2
05	08.6400.4.004	SCREW M4-4	1
06	15.5021.0.300	STUD	1
07	12.0008.3.431	AIR TUBING- J15B	1
08	12.0008.3.431	AIR TUBING- J15A	1
09	15.7002.0.000	LATH	1
10	08.6000.3.006	SCREW M3-6	2
11	12.0008.3.745	SENSOR	1
12	12.0008.3.747	SCREW	1
13	12.0008.3.431	AIR TUBING- J8A	1
14	12.0008.3.431	AIR TUBING- J8B	1
15	15.3008.0.600	MOTOR BRACKET	1
16	08.6000.5.016	SCREW M5-16	4
17	15.5015.0.700	CUTTING BLOCK	1
17*	15.5023.0.700	CUTTING BLOCK RDE	1
18	17.0012.0.571	SCREW	1
19	08.6000.5.016	SCREW M5-16	1
20	08.6000.5.012	SCREW M5-12	3
21	08.6850.5.000	WASHER 5,3	3
22	19.0063.6.445	KNIFE CLAMP	1
23	17.0013.1.415	SCREW	1
24	17.0021.1.073	KEY	1
25	15.5019.0.800	CLAMP	1
26	12.0008.3.409	CONNECTOR	(2)
27	12.0008.3.874	CONNECTOR	(1)
28	19.0094.2.418	AIR TUBING - SUCTION	1
28	15.5024.0.992	AIR TUBING - SUCTION	1
29	19.0008.3.415	VACUUM UNIT	1
30	12.0008.3.754	CONNECTOR	1
31	12.0008.3.431	AIR TUBING- J16A1	1
32	12.0008.3.023	TY-WRAP	1
33	08.6000.5.022	SCREW M5-22	1
34	12.0008.6.977	BAG	1
35	08.6000.3.008	SCREW M3-8	(1)
36	08.6700.4.000	NUT	(1)
37	08.6000.3.030	SCREW M3-30	(2)
38	15.3025.0.300	GUIDE PIN	(1)
39	12.0008.3.816	CYLINDER	(1)
40	15.3016.0.800	CLEVIS ACTUATOR	(1)
41*	15.5022.0.600	ADAPTER KNIFE RDE	1
42*	08.6400.4.010	SCREW TUBING 19x3	1
	ULTRAFLEX		
*	RDE		

MAIN SHAFT - BASE

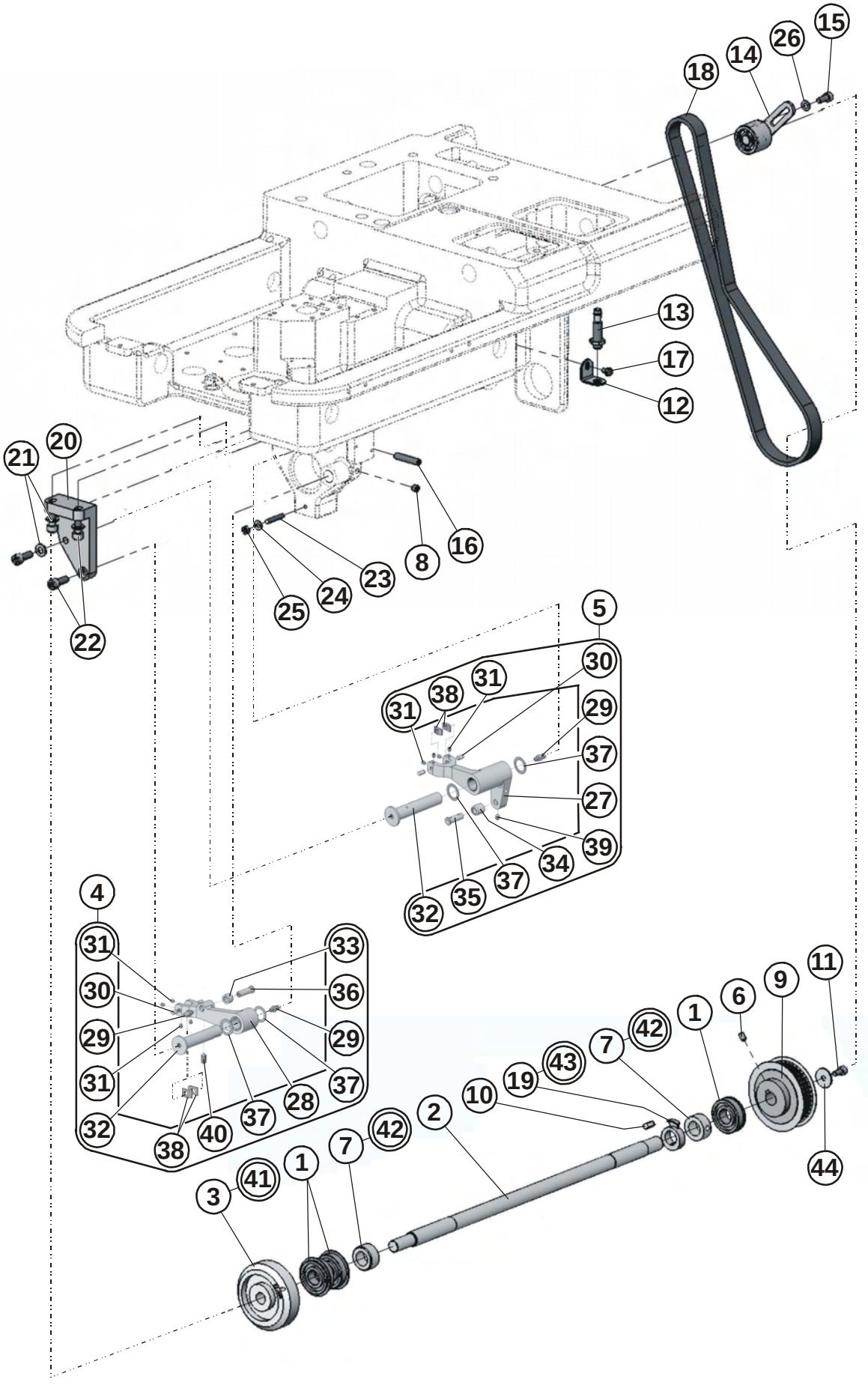

MAIN SHAFT - BASE

DET	PART NUMBER	DESCRIPTION	QTY.
01	01.7805.0.000	BEARING	3
02	15.4601.0.300	SHAFT	1
03	15.4602.1.400	STICH CAM	1
04	15.4605.0.050	LEVER SPREADER - ASSEMBLY	1
05	15.4606.0.050	LEVER LOOPER - ASSEMBLY	1
06	08.6400.5.008	SCREW M5-8	1
07	12.1050.0.001	CLAMP COLLAR 15	2
08	08.6400.6.006	SCREW M6-6	1
09	15.4604.0.500	MAIN SHAFT DRIVE PULLEY	1
10	12.4030.0.514	KEY 5e9x5x14	1
11	08.6000.5.010	SCREW M5-10	1
12	15.4615.0.800	SENSOR BRACKET	1
13	12.0010.4.093	SENSOR BQ 10	1
14	15.1128.0.050	TENSION PULLEY	1
15	08.6000.5.012	SCREW M5-10	1
16	08.6400.6.030	SSCREW M6-30	1
17	08.6310.4.006	SCREW M4-6	1
18	12.5050.2.028	BELT	1
19	15.4410.0.400	SENSOR RING	1
20	15.4614.0.600	BRACKET	1
21	08.6850.6.000	WASHER 6,4	3
22	08.6000.6.016	SCREW M6-16	4
23	08.6420.4.025	SCREW M4-25	1
24	08.6850.4.000	WASHER M4	1
25	08.6700.4.000	NUT M4	1
26	08.6850.5.000	WASHER 5,3	1
27	15.4606.0.600	LEVER LOOPER	(1)
28	15.4608.0.300	LEVER SPREADER	(1)
29	19.0044.1.623	NIPLE LUBRICATING M4	(1)+(2)
30	12.1010.2.027	PIN 4m6-8	(2)+(2)
31	08.6400.3.004	SCREW m3-4	(4)+(4)
32	15.4607.0.300	LEVER CAM STUD	(1)+(1)
33	15.4610.0.400	LOOPER ROLL 00	(1)
	Its Possible Order		
	15.4611.0.400	ROLL 05	
	15.4612.0.400	ROLL 10	
	15.4613.0.400	ROLL 15	
34	15.4616.0.400	LOOPER ROLL 00	(1)
	Its Possible Order		
	15.4617.0.400	LOOPER ROLL 05	
	15.4618.0.400	LOOPER ROLL 10	
	15.4619.0.400	LOOPER ROLL 15	
35	15.4609.0.300	LOOPER LEVER STUD	(1)
36	15.4608.0.300	SPREADER LEVER STUD	(1)
37	17.0019.0.602	WASHER	(2)+(2)
38	15.4543.0.600	SLIDE BLOCK	(2)+(2)
39	08.6400.4.005	SCREW	(1)
40	08.6400.5.008	SCREW	(1)
41	08.6000.5.016	SCREW M5-16	(1)
42	08.6400.6.006	SCREW M6-6	(1)+(1)
43	08.6400.5.305	SCREW M5-5	(1)
44	15.1146.0.400	WASHER	1

COVERS BASE

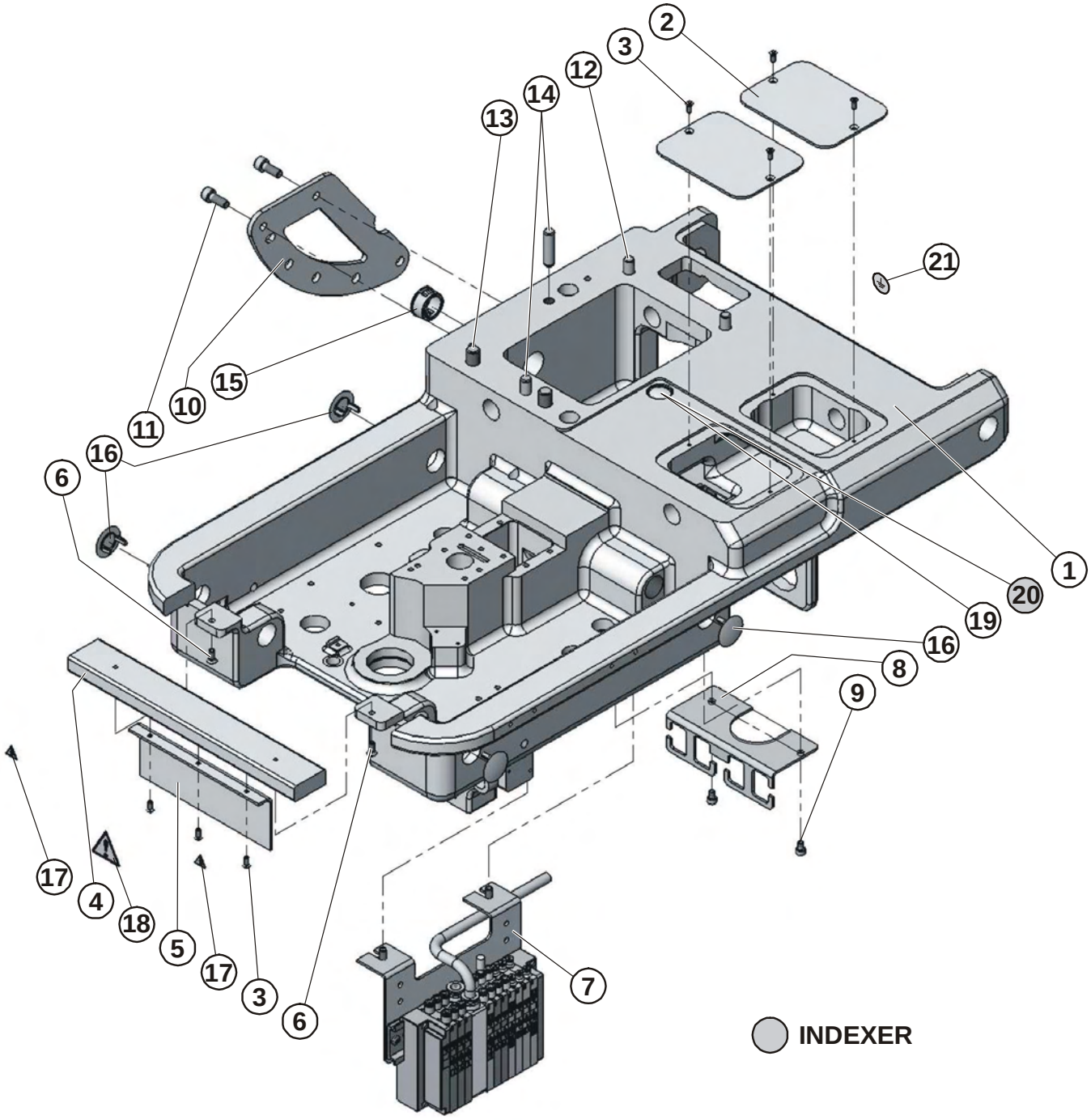

COVERS BASE

DET	PART NUMBER	DESCRIPTION	QTY.
01	15.3001.1.700	BASE ES-505	1
02	15.3018.0.800	COVER - Y AXIS	2
03	15.1420.0.100	SCREW	7
04	15.3032.0.600	HOLDER COVER	1
05	15.3037.0.800	COVER	1
06	08.6132.4.010	SCREW M4x10	2
07	15.7001.0.052	VALVE BLOCK ASSEMBLY	1
08	15.3040.0.800	HOLDER	1
09	08.6000.4.006	SCREW M4-6	2
10	15.3043.0.800	LOCK	1
11	08.6000.6.016	SCREW M6-16	2
12	08.6000.8.090	SCREW M8-90	2
13	08.6000.0.090	SCREW M10-90	2
14	12.1010.0.830	PIN 8-30	2
15	12.0010.4.005	PLUG SNAP	1
16	12.0008.4.777	PLUG 18,4-20,6	4
17	12.8000.0.437	LABEL-DANGER INJURY	2
18	17.0097.5.174	LABEL- WARNING	1
19	12.0010.6.901	PLUG 15,9	1
20	12.0008.4.222	BUSHING	1
21	12.0008.4.052	LABEL GROUND	1
	INDEXER		

LUBRICATION

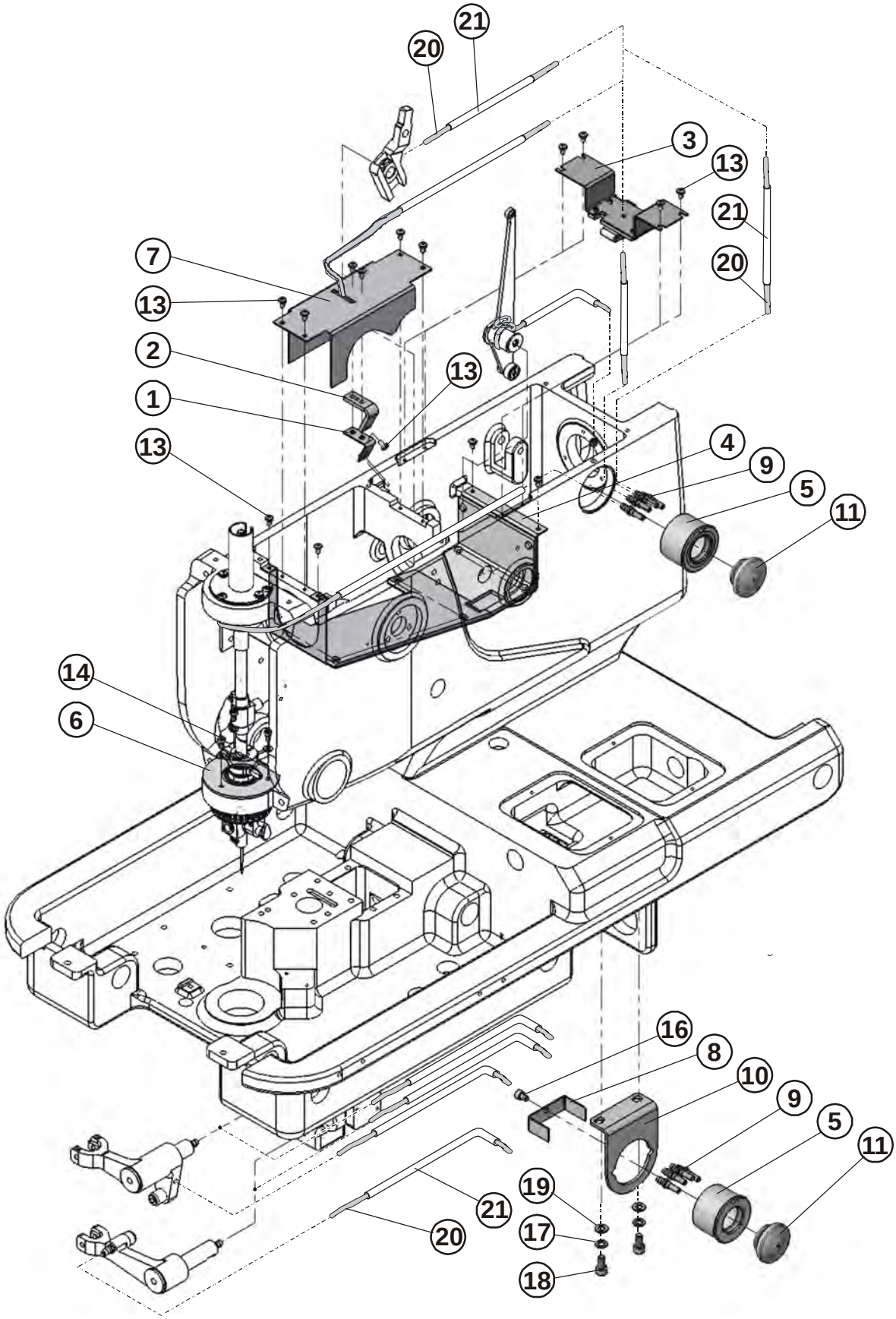

LUBRICATION

DET	PART NUMBER	DESCRIPTION	QTY.
01	15.1103.0.800	BRACKET	1
02	15.1104.0.991	FELT	1
03	15.1124.0.050	FELT HOLDER	1
04	15.1125.0.050	FELT HOLDER	1
05	15.1130.0.400	OIL GAUGE RESERVOIR	2
06	15.1131.0.991	FELT	1
07	15.1136.0.800	GEAR COVER	1
08	15.3039.0.800	HOLDER	1
09	22.0229.0.000	STRAIGHT FITTING	8
10	12.0008.3.844	BRACKET	1
11	17.0095.1.329	OIL INDICATOR	2
12	08.6400.5.005	SCREW M5-5	1
13	15.1422.0.100	SCREW M3-5	15
14	08.6000.3.006	SCREW M3-6	3
15	08.6850.3.000	WASHER 3,2	3
16	08.6000.4.006	SCREW M4-6	1
17	08.6800.5.000	SPRING WASHER M5	2
18	08.6000.5.010	SCREW M5-10	2
19	08.6850.5.000	WASHER 5,3	2
20	19.0094.2.412	OIL TUBE	
21	19.0094.5.412	WICK	

CASE - ASSEMBLY

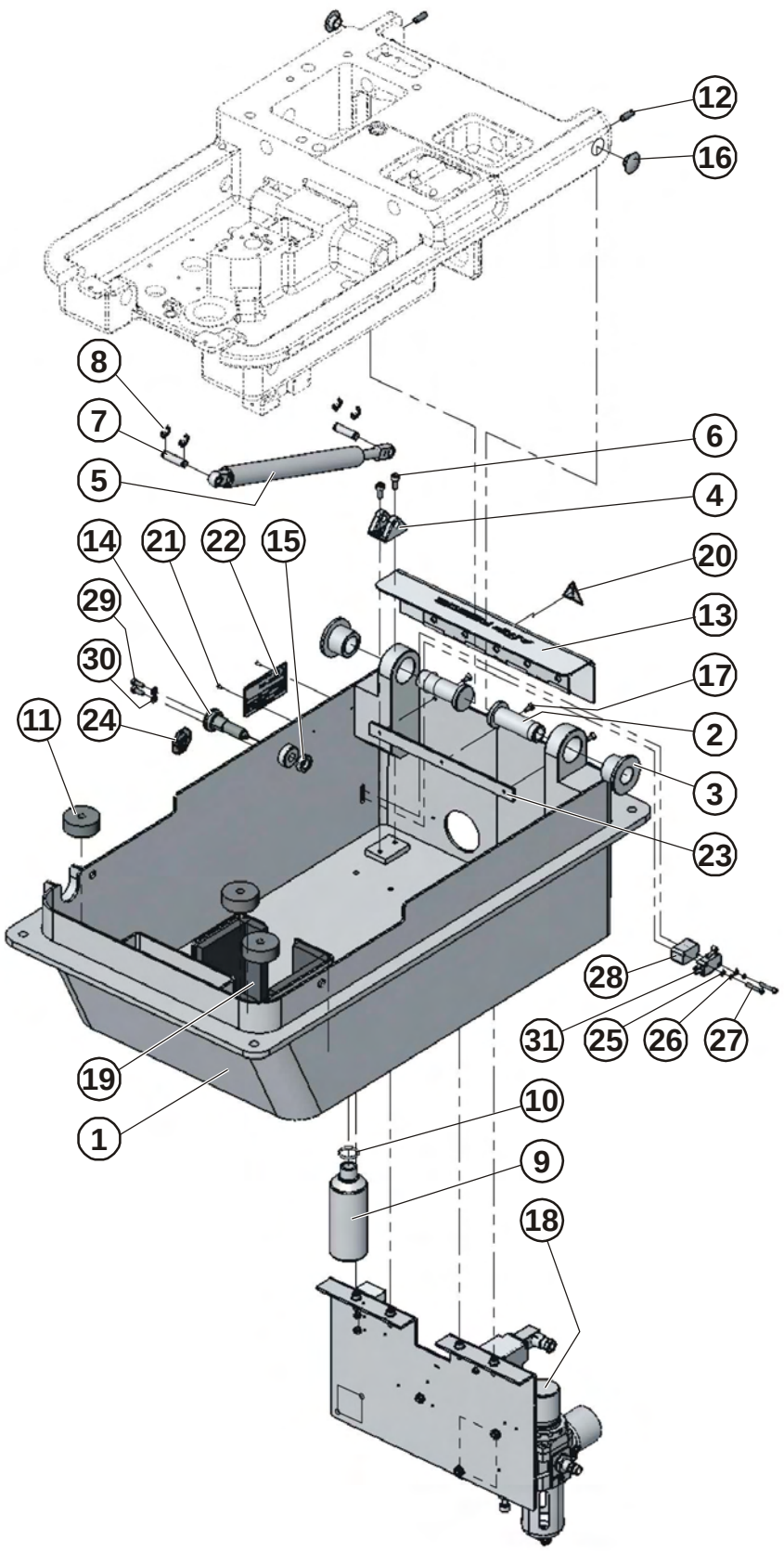

CASE - ASSEMBLY

DET	PART NUMBER	DESCRIPTION	QTY.
01	15.3801.0.000	CASE ES-505	1
02	15.3807.0.300	STUD	2
03	15.3809.0.400	BUSHING	2
04	15.3805.0.700	HOLDER	1
05	12.0008.6.998	GAS SPRING	1
06	08.6000.5.012	SCREW M5-12	2
07	15.3806.0.300	STUD	2
08	17.0027.4.085	LOCK RING 7	4
09	05.1322.0.000	OIL RESERVOIR	1
10	12.0008.6.812	O-RING 19x2	1
11	15.3810.0.990	SHOCK MOUNT	3
12	08.6400.6.010	SCREW M6-10	2
13	15.3026.0.800	BACK COVER	1
14	12.0008.6.230	PLUNGERS M12x1,5	1
15	08.6710.9.500	NUT M12x1,5	1
16	12.0010.6.906	PLUG 14,4/24/7	2
17	08.6132.4.010	SCREW M4x10	3
18	15.7001.0.051	FILTER REGULATOR ASSEMBLY	1
19	15.3811.0.993	BASE SOUND DEADENER	1
20	17.0097.5.174	LABEL- WARNING	1
21	12.1016.0.000	RIVET	2
22	12.8000.1.037	LABEL CE ES-505	1
23	15.3812.0.800	SHIM	1
24	12.8000.0.438	LABEL - GUALITY TÜV SÜD	1
25	08.6850.3.000	WASHER 3,2	2
26	08.6800.3.000	WASHER 3	2
27	08.6000.3.020	SCREW M3-20	2
28	15.3813.0.600	SWITCH HOLDER	1
29	08.6000.4.012	SCREW M4-12	2
30	08.6850.4.000	WASHER M4	2
31	06.0120.0.000	SWITCH-MICRO	1

FILTER REGULATOR - ASSEMBLY

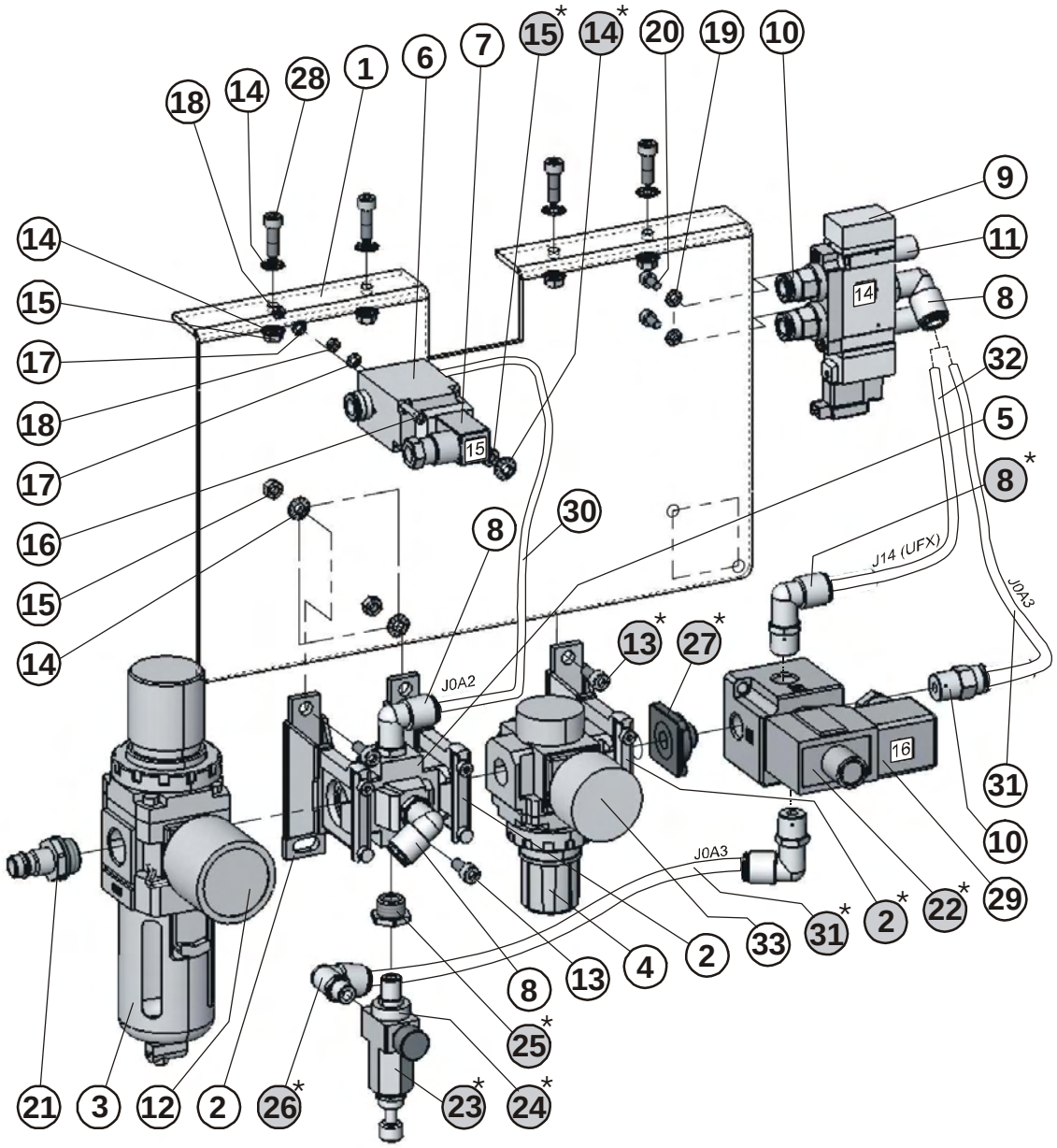

* ULTRAFLEX

FILTER REGULATORE - ASSEMBLY

DET	PART NUMBER	DESCRIPTION	QTY.
01	15.3804.0.800	REGULATOR BRACKET	1
02	12.0008.3.852	SPACER ATTACHMENT	3
02*	12.0008.3.852	SPACER ATTACHMENT	1
03	12.0008.3.842	FILTER REGULATOR	1
04	12.0008.3.843	REGULATOR	1
05	12.0008.3.853	CROSS SPACER	1
06	12.0008.3.792	2/2 VALVE	1
07	12.0008.3.895	CONNECTOR	1
08	12.0008.3.741	CONNECTOR	5
08*	12.0008.3.741	CONNECTOR	2
09	12.0008.3.854	VALVE	1
10	12.0008.3.819	CONNECTOR	3
11	12.0008.3.427	SILENCER	2
12	12.0008.3.418	GAUGE WITH MANOMETR	1
13	08.6000.5.012	SCREW M5-12	3
13*	08.6000.5.012	SCREW M5-12	1
14	08.6832.5.000	SERRATED WASHER M5	11
14*	08.6832.5.000	SERRATED WASHER M5	1
15	08.6700.5.000	NUT M5	7
15*	08.6700.5.000	NUT M5	1
16	08.6000.3.050	SCREW M3-50	2
17	08.6832.3.000	WASHER 3	2
18	08.6700.3.000	NUT M3	2
19	08.6832.4.000	WASHER M4	2
20	08.6000.4.008	SCREW M4-8	2
21	12.0008.3.846	CONNECTOR	1
22*	12.0008.3.849	VALVE	1
23*	12.0008.3.615	REGULATOR	1
24*	12.0008.3.785	GAUGE	1
25*	12.0008.3.855	REDUCTION	1
26*	12.0008.3.754	CONNECTOR	1
27*	12.0008.3.859	CONNECTOR	1
28	08.6000.5.016	SCREW M5-16	4
29*	12.0008.3.897	CONNECTOR	1
30	12.0008.3.431	AIR TUBING - J0A2	1
31	12.0008.3.431	AIR TUBING - J0A3	1
32*	12.0008.3.431	AIR TUBING - J14 (ULTRAFLEX)	1
33	12.0008.3.445	GAUGE G36-10-01	1
*	ULTRAFLEX		

VALVE BLOCK

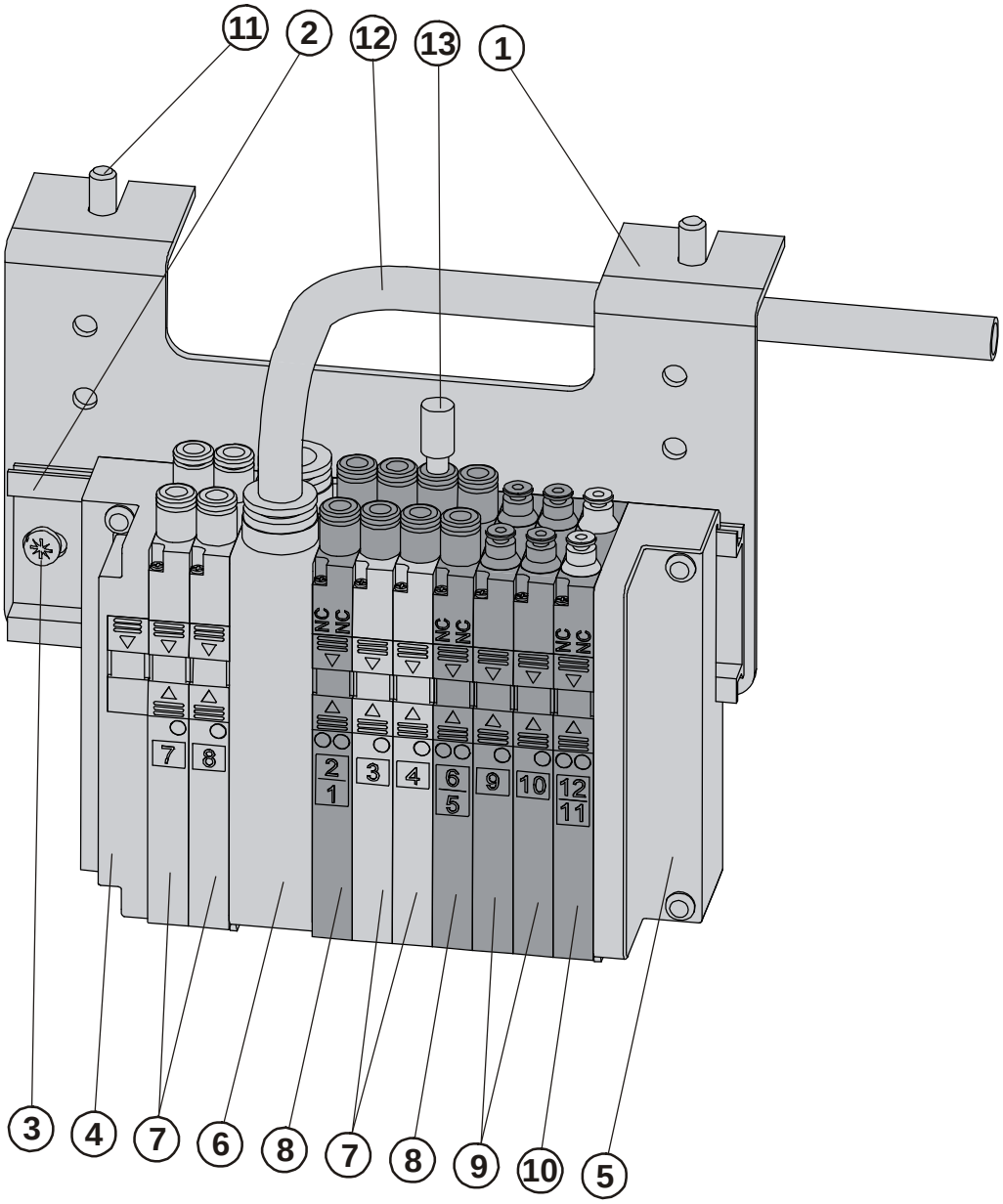

VALVE BLOCK

DET	PART NUMBER	DESCRIPTION	QTY.
01	15.3024.0.800	VALVE BRACKET	1
02	12.0008.3.661	DIN LATH,L=136mm	1
03	08.6683.4.007	SCREW 3,9-6,5	2
04	12.0008.3.831	END PLATE U	1
05	12.0008.3.830	END PLATE D	1
06	12.0008.3.829	AIR SUPPLY BLOCK	1
07	12.0008.3.828	5/2 VALVE	3
08	12.0008.3.856	2x3/2 VALVE	2
09	12.0008.3.857	5/2 VALVE	2
10	12.0008.3.858	2x3/2 VALVE	1
11	15.1429.0.100	SCREW M5-10	2
12	12.0008.3.431	AIR TUBING- J0A1	1m
13	12.0008.3.426	OLUG KQ2P-04	1

ELECTROBOX

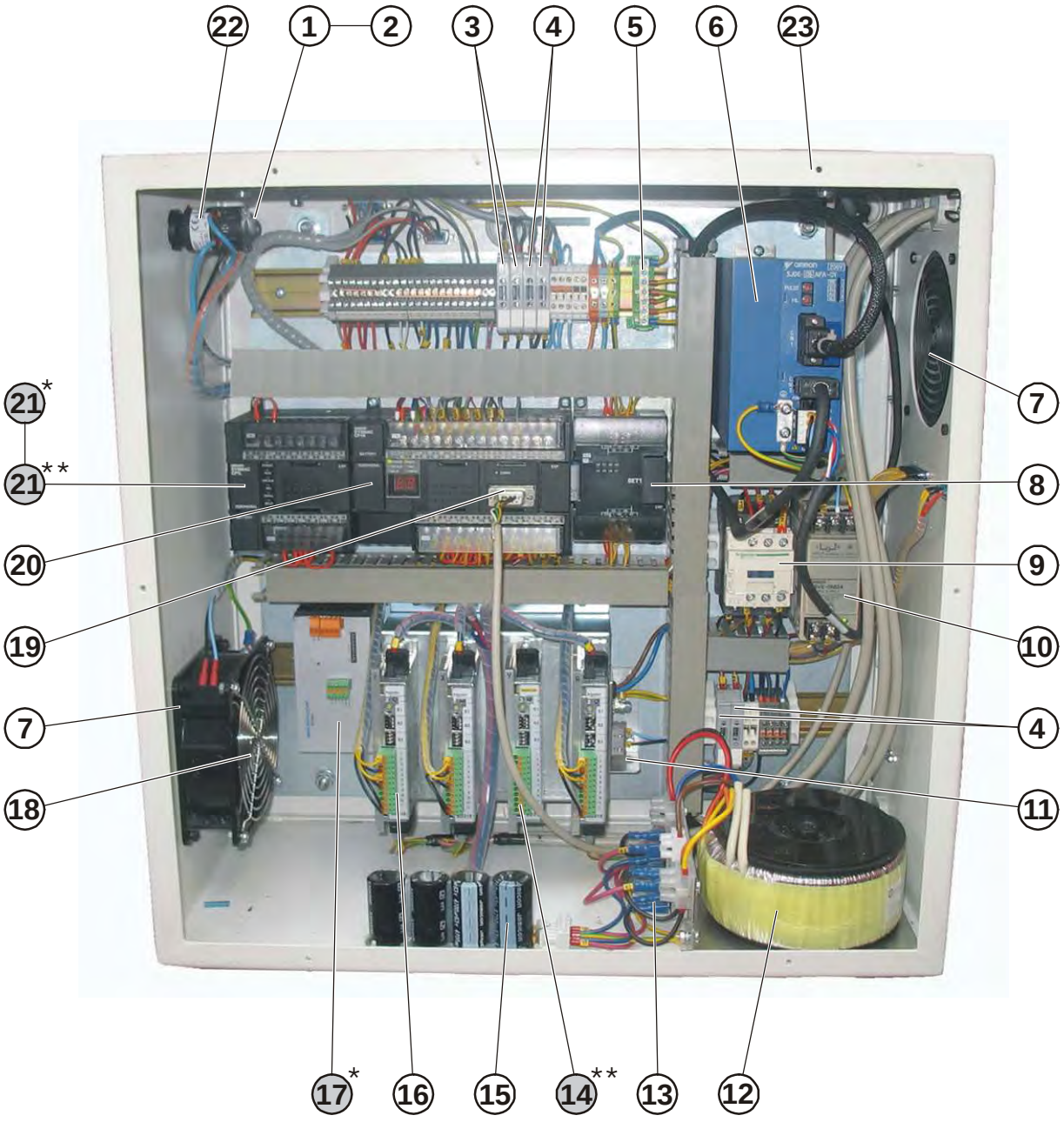

* ULTRAFLEX

** INDEXER

ELECTROBOX

DET	PART NUMBER	DESCRIPTION	QTY.
01	12.0008.4.612	KNIFE BUTTON	1
02	12.0008.4.615	BLOCK NO	1
03	12.0008.4.665	FUSE T2A - F1, F2	2
04	12.0008.4.664	FUSE T10A - F3, F4, F5, F6	4
05	12.0008.4.050	BRIDGE GND	1
06	06.8015.0.004	SERVODRIVER	1
07	12.0008.4.761	FAN FILTER	2
08	12.0010.4.071	EXP. BLOCK	1
09	12.0008.4.833	CONTACTOR	1
10	12.0010.4.168	POWER SUPPLY	1
11	12.0010.4.078	FILTER	1
12	12.0010.4.162	TOROID TRANSFORMER	1
13	12.0008.4.770	RECTIFIER	2
14**	12.0010.4.161	DRIVER INDEXER	1
15*	12.0010.4.134	CAPACITOR BOARD	1
16	12.0010.4.161	DRIVER STEPPERMOTOR	3
17*	12.0008.4.850	DRIVER ACL	1
18*	12.0008.4.682	FAN	1
19	12.0010.4.067	PORT RS232	1
20	15.8001.0.001	PLC A	1
21*	15.8001.0.002	PLC B	1
21**	15.8001.0.002	PLC B	1
22	12.0010.4.200	POWER SWITCH	1
23	15.6004.0.000	ELECTROBOX	1

*	ULTRAFLEX
**	INDEXER

EMBEDDED ASSMEBLY + PANEL KIT OMRON

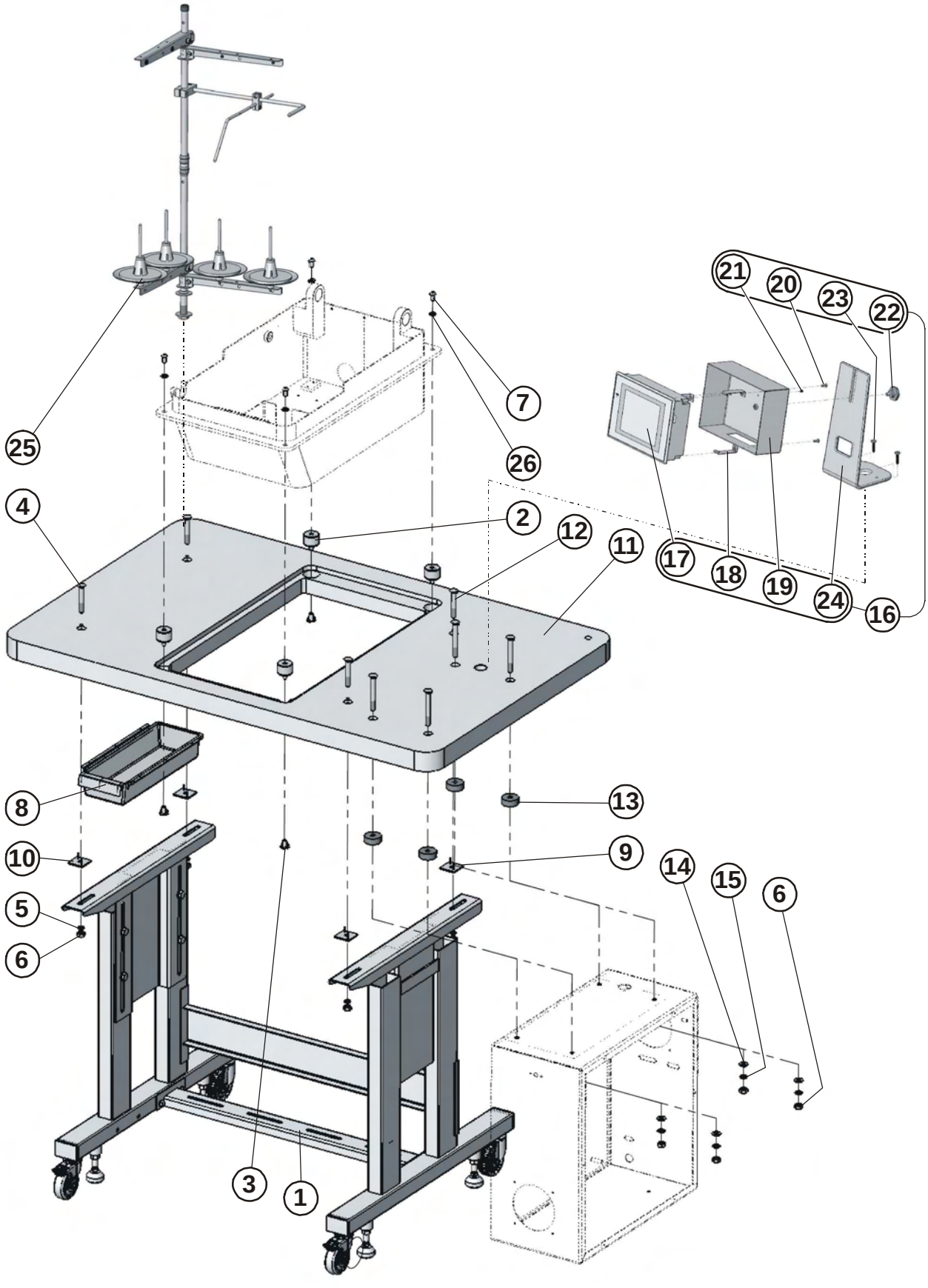

EMBEDDED ASSEMBLY + PANEL KIT OMRON

DET	PART NUMBER	DESCRIPTION	QTY.
01	04.9015.0.000	FRAME KIT	1
02	24.0084.0.000	UNIVERSAL TABLE SILENTBLOCK	4
03	08.6742.8.000	NUT M8	4
04	08.6562.0.070	SCREW M10-70	4
05	08.6852.0.000	WASHER 10,5	4
06	08.6702.0.000	NUT M10	8
07	08.6202.8.016	SCREW M8-16	4
08	12.0008.6.901	BOX	1
09	17.0094.0.200	WASHER	4
10	12.4010.0.004	NAIL 1,6-20	8
11	04.9015.0.900	TABLE TOP	1
12	08.6562.0.090	SCREW M10-90	4
13	15.6005.0.990	SHOCK MOUNT	4
14	08.6852.0.000	WASHER 10,5	4
15	08.6802.0.000	SPRING WASHER M10	8
16	15.6002.0.050	PANEL KIT - OMRON	1
17	12.0010.4.146	DISPLAY	(1)
18	24.0168.0.000	DISPLAY HOLDER - OMRON	(3)
19	24.0169.0.000	PANEL COVER - OMRON	(1)
20	15.1426.0.100	SCREW M4-10	(3)
21	08.6662.3.006	SCREW	(1)
22	19.0014.7.003	SCREW - PANEL	(1)
23	08.6663.5.025	SCREW 4,8-25	(2)
24	15.6002.0.800	DISPLAY STAND TABLE	(1)
25	12.9900.9.000	THREAD STAND - ASSEMBLY - 4-THREAD	1
26	08.6852.8.000	WASHER M8	4

STANDARD ACCESSORIES

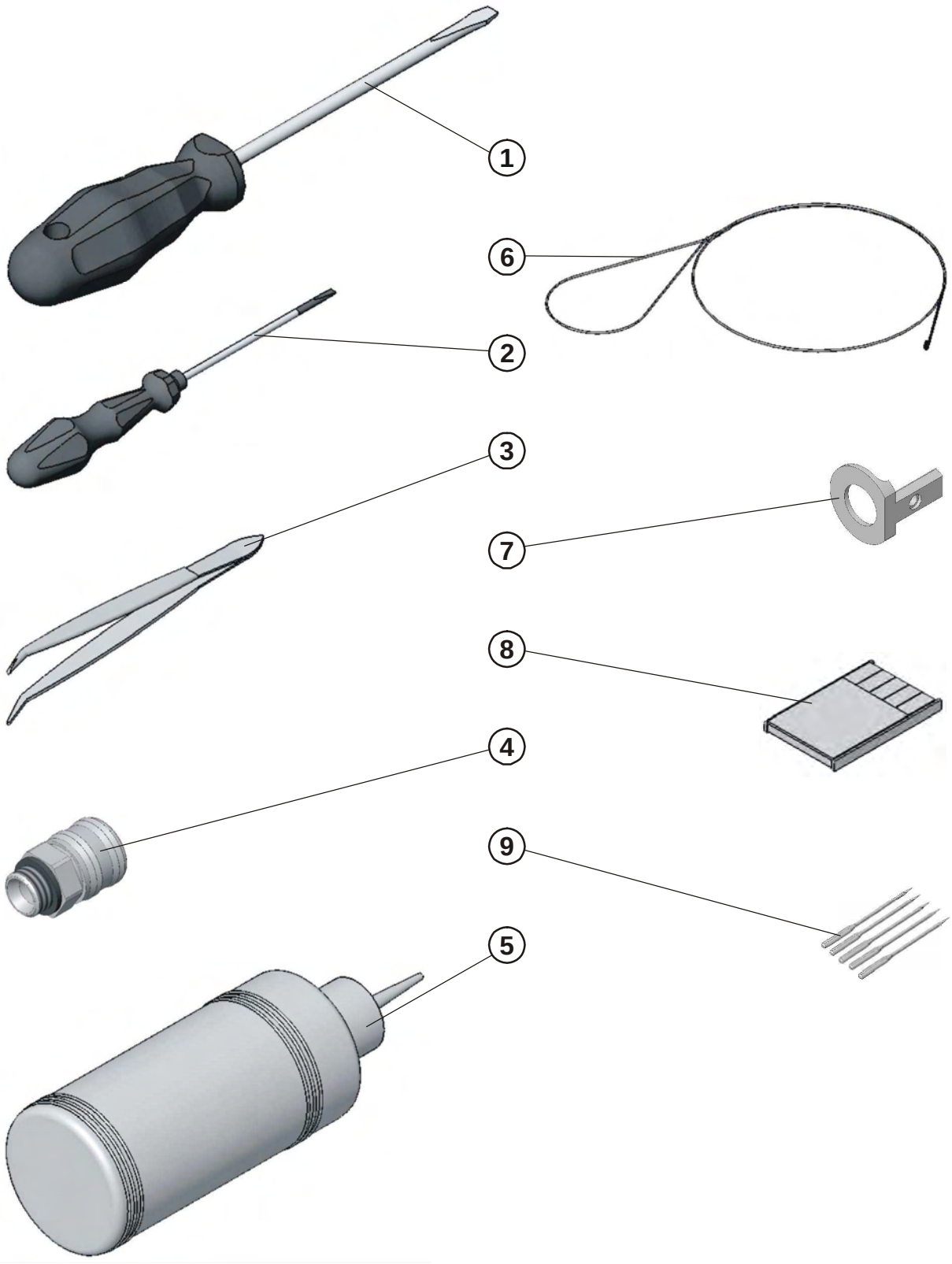

STANDARD ACCESSORIES

DET	PART NUMBER	DESCRIPTION	QTY.
01	12.0008.6.005	SCREEWDRIVER	1
02	12.0008.6.001	SCREEWDRIVER	1
03	12.0008.6.215	TWEEZERS PFAFF145	1
04	12.0008.3.845	CONNECTOR	1
05	05.1322.0.000	OIL CAN	1
06	17.0027.1.223	WIRE THREADING	1
07	19.0064.7.420	TIMING GAUGE UNI	1
08	12.0008.6.968	NEEDLE BOX	1
09	02.0579.1.111	NEEDLE	5

VERSION AF ES-505

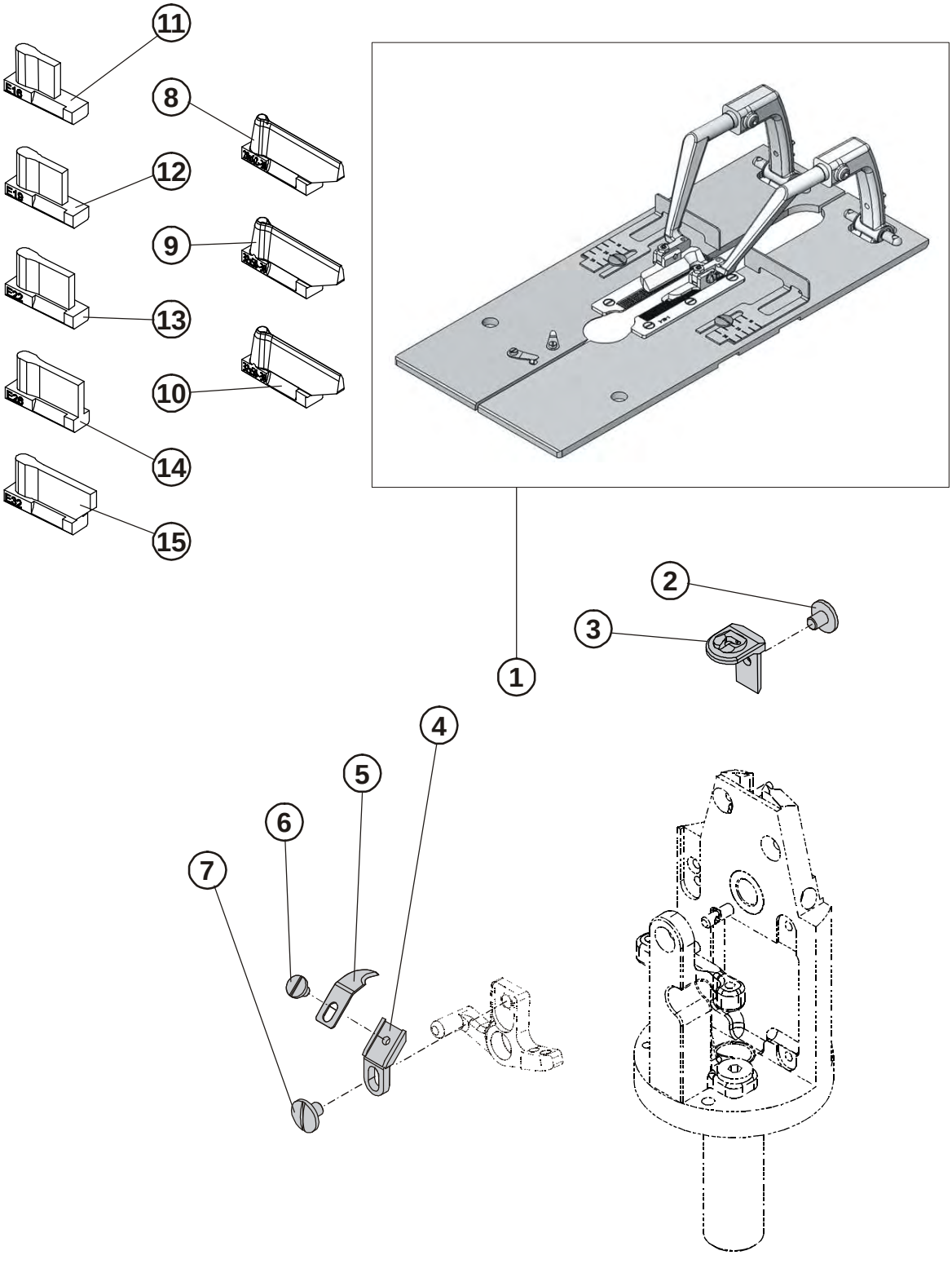

VERSION AF ES-505

DET	PART NUMBER	DESCRIPTION	QTY.
01	15.2500.0.050	CLAMPS	1
02	01.2056.1.000	SCREW	1
03	03.7020.0.317	THROAT PLATE	1
04	15.4516.0.800	KNIFE HOLDER	1
05	17.0087.0.204	KNIFE	1
06	17.0012.0.605	SCREW	1
07	17.0012.4.106	SCREW	1
08	03.7032.0.038	KNIFE 2,8x4,2-38	1
09	03.7034.0.038	KNIFE 3,2x5,0-38	1
10	03.7035.0.038	KNIFE 3,4x4,2-38	1
11	03.7040.0.016	CUTTING STEEL 16	1
12	03.7040.0.019	CUTTING STEEL 19	1
13	03.7040.0.022	CUTTING STEEL 22	1
14	03.7040.0.026	CUTTING STEEL 26	1
15	03.7040.0.032	CUTTING STEEL 32	1

AF - CLAMPING ASSEMBLY

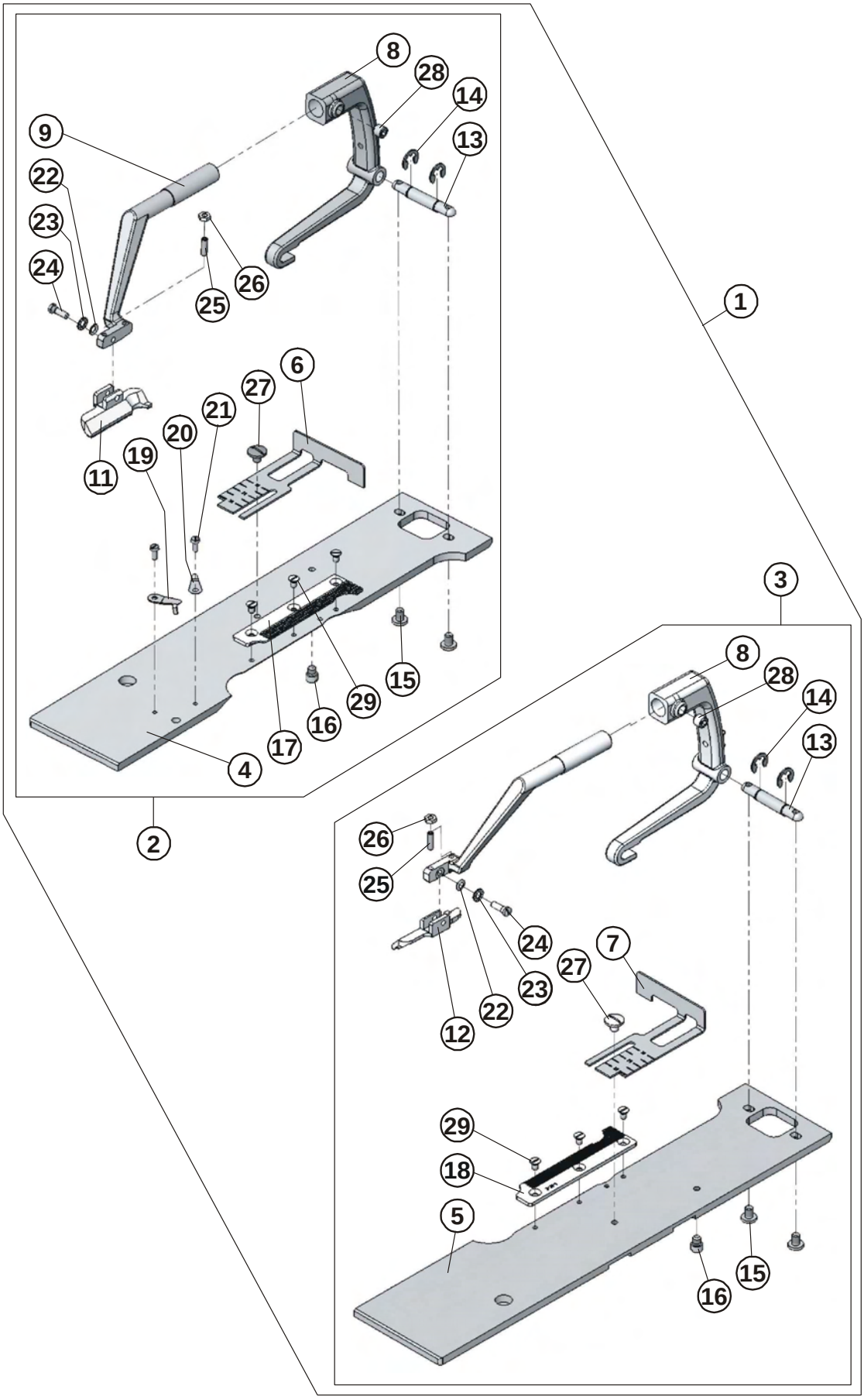

AF - CLAMPING ASSEMEBLY

DET	PART NUMBER	DESCRIPTION	QTY.
01	15.2500.0.050	AF - CLAMPING - ASSEMBLY	1
02	15.2501.0.050	AF - CLAMPING L.H. - ASSEMBLY	(1)
03	15.2502.0.050	AF - CLAMPING R.H.- ASSEMBLY	(1)
04	15.2501.0.800	PLATE LEFT - ASSEMBLY	((1))
05	15.2502.0.800	PLATE RIGHT - ASSEMBLY	((1))
06	19.0082.6.421	L.H. CLOTH GAUGE	((1))
07	19.0082.6.422	R.H. CLOTH GAUGE	((1))
08	15.2504.0.700	CLAMP ARM BASE	((1)+(1))
09	15.2505.0.700	L.H. CLAMP ARM	((1))
10	15.2506.0.700	R.H. CLAMP ARM	((1))
11	17.0066.7.421	CLAMP FOOT LEFT	(1)
12	17.0066.7.420	CLAMP FOOT RIGHT	(1)
13	15.2503.0.300	CLAMP ARM STUD	((1)+(1))
14	12.1045.0.005	LOCK WASHER	((2)+(2))
15	08.6050.4.006	SCREW M4X6	((2)+(2))
16	15.2023.0.300	SCREW	((1)+(1))
17	03.7050.0.001	CLAMP MAT L.H.	((1))
18	03.7050.0.002	CLAMP MAT R.H.	((1))
19	17.0087.0.169	KNIFE	((1)+(1))
20	17.0082.5.884	CLIP	((1))
21	15.1430.0.100	SCREWV	((2))
22	17.0019.2.066	WASHER	((1)+(1))
23	17.0019.5.040	WASHER	((1)+(1))
24	17.0013.5.067	SCREW	((1)+(1))
25	08.6402.3.010	SCREW M3-10	((1)+(1))
26	08.6712.3.000	NUT M3	((1)+(1))
27	17.0012.4.106	SCREW M4	((1)+(1))
28	08.6402.6.006	SCREW M6-6	((1)+(1))
29	15.1431.0.100	SCREW M3-4	((3)+(3))

VERSION CT ES 505

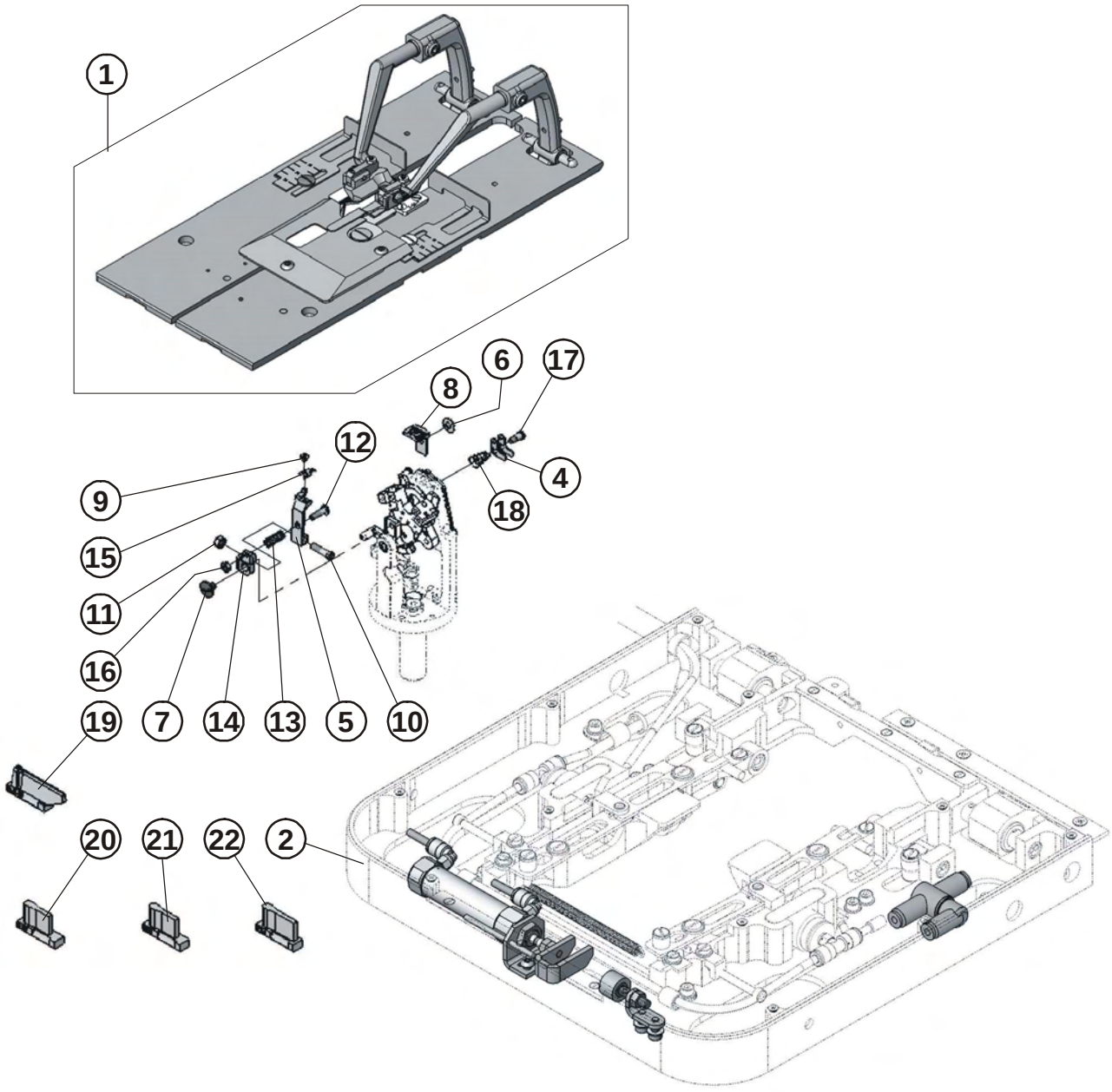

VERSION CT ES 505

DET	PART NUMBER	DESCRIPTION	QTY.
01	15.2600.0.050	CT-CLAMPING - ASSEMBLY 14-26	1
02	15.2600.0.051	CT - ASSEMBLY	1
03	12.0008.3.563	KIT PNEU ES-505 CT	1
04	15.4524.0.800	TENSION DISC	1
05	15.4546.0.600	KNIFE HOLDER-CT	1
06	01.2056.1.000	SCREW-FULL THREADER	1
07	17.0012.4.106	SCREW M4	1
08	03.7021.0.319	THROAT PLATE CT	1
09	17.0012.0.688	SCREW M2,5-3,5	1
10	17.0013.1.482	SCREW 3,5g6/3,5-13	1
11	17.0016.1.401	NUT M3,5-0,35-3	1
12	17.0014.1.178	SCREW M3-11	1
13	17.0026.0.218	SPRING	1
14	19.0082.6.420	HOLDER	1
15	19.0087.0.420	KNIFE TRIMMER	2
16	08.6700.3.000	NUT M3	1
17	17.0013.1.259	SCREW	1
18	17.0026.2.020	SPING	1
19	03.7032.0.038	KNIFE 28x42-38	1
20	03.7040.0.019	CUTTING STEEL 19	1
21	03.7040.0.020	CUTTING STEEL 20	1
22	03.7040.0.024	CUTTING STEEL 24	1

CT - ASSEMBLY

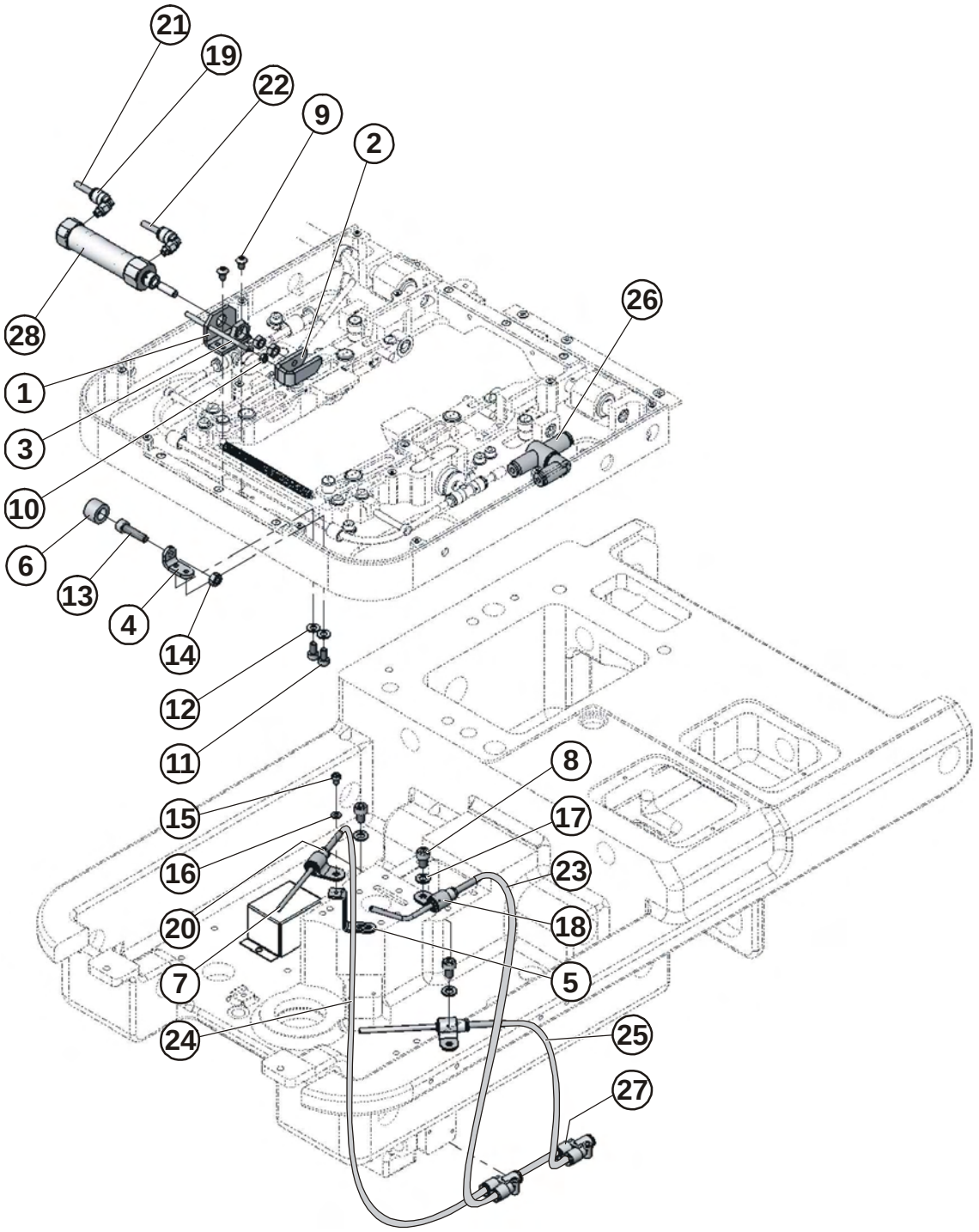

Released 05/2012
e-mail: service@amfreece.cz; parts@amfreece.cz; website: www.amfreece.com
Phone: +420 582 309 286; Fax: +420 582 360 606

CT - ASSEMBLY

DET	PART NUMBER	DESCRIPTION	QTY.
01	15.2617.0.800	HOLDER	1
02	15.2618.0.800	ACTUATOR	1
03	15.2619.0.300	GUIDE BAR	1
04	15.2620.0.800	BRACKET	1
05	15.2624.0.800	HOLDER	1
06	19.0095.1.406	REST	1
07	19.0005.2.218	TUBE	3
08	08.6000.5.008	SCREW M5 x 8	3
09	08.6200.4.006	SCREW M4-6	2
10	08.6700.3.000	NUT M3	1
11	08.6000.4.008	SCREW M4-8	2
12	08.6850.4.000	WASHER M4	2
13	08.6000.5.020	SCREW M5-20	1
14	08.6700.5.000	NUT M5	1
15	08.6000.3.005	SCREW M3-5	1
16	08.6850.3.000	WASHER 3,2	1
17	08.6850.5.000	WASHER 5,3	3
18	07.6600.0.004	CLAMP CABLE	3
19	12.0008.3.411	CONNECTOR	2
20	12.0008.3.409	CONNECTOR	3
21	12.0008.3.416	AIR TUBE- J7A	1
22	12.0008.3.416	AIR TUBE- J7B	1
23	12.0008.3.416	AIR TUBE- J16A5	1
24	12.0008.3.416	AIR TUBE- J16A3	1
25	12.0008.3.416	AIR TUBE- J16A4	1
26	12.0008.3.899	LOGIC VALVE	1
27	12.0008.3.736	CONNECTOR	2
28	12.0008.3.880	CYLINDER	1

CT - CLAMPING - ASSEMBLY

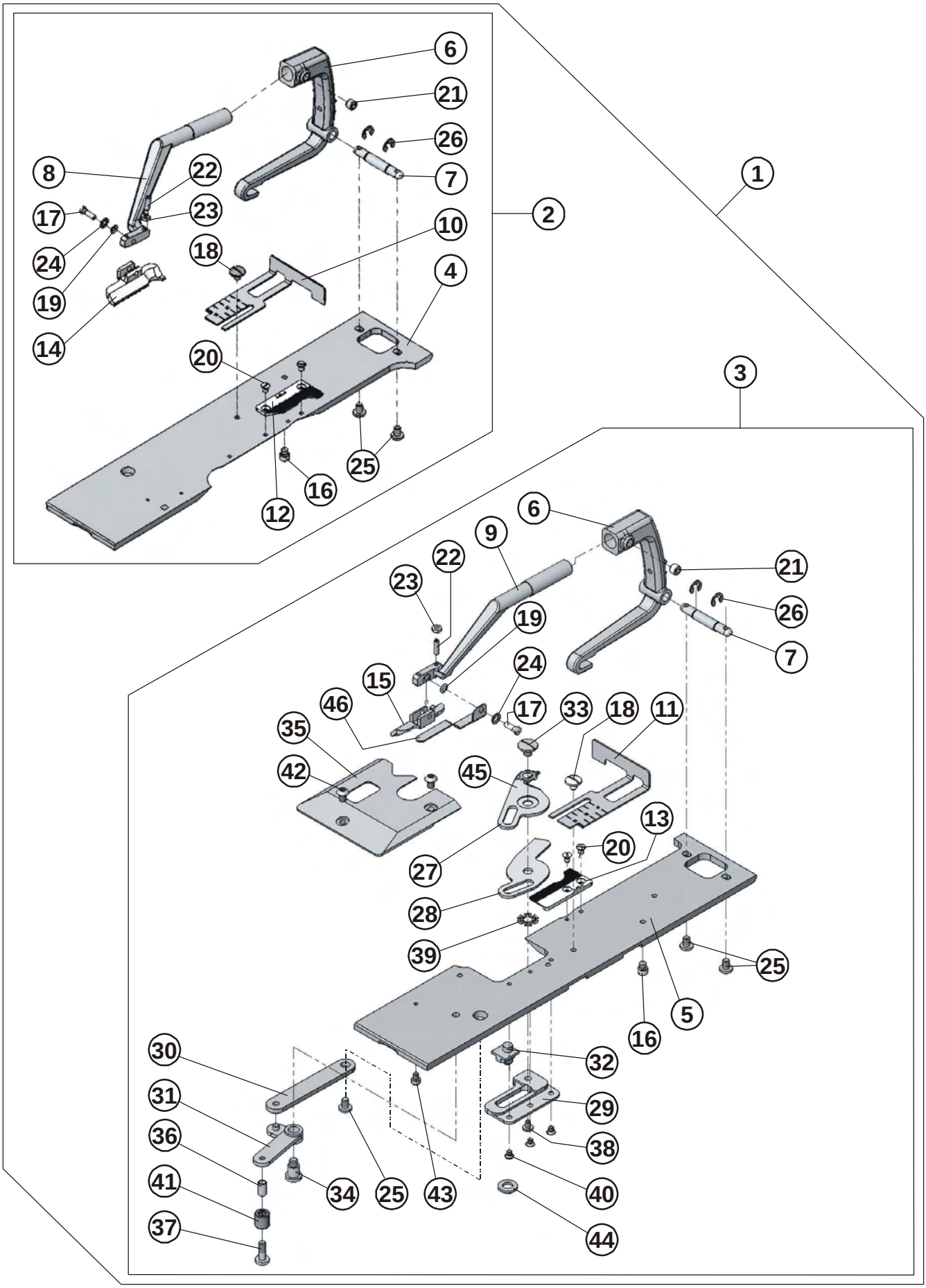

CT - CLAMPING - ASSEMBLY

DET	PART NUMBER	DESCRIPTION	QTY.
01		CT - CLAMPING - ASSEMBLY	1
02	SEE PAGE 3-83	CT - CLAMPING L.H.	(1)
03	SEE PAGE 3-83	CT - CLAMPING R.H.	(1)
04	15.2501.0.800	PLATE LEFT - AF	((1))
5	15.2602.0.800	PLATE RIGHT - CT	((1))
06	15.2504.0.700	CLAMP ARM BASE	((1)+(1))
07	15.2503.0.300	CLAMP ARM STUD	((1)+(1))
08	15.2505.0.700	L.H. CLAMP ARM	((1))
09	15.2506.0.700	R.H. CLAMP ARM	((1))
10	19.0082.6.421	L.H. CLOTH GAUGE	((1))
11	19.0082.6.422	R.H. CLOTH GAUGE	((1))
12	03.7050.0.003	CLAMP MAT L.H.	((1))
13	03.7050.0.006	CLAMP MAT R.H.	((1))
14	SEE PAGE 3-83	CLAMP FOOT LEFT	((1))
15	SEE PAGE 3-83	CLAMP FOOT RIGHT	((1))
16	15.2023.0.300	SCREW	((1)+(1))
17	17.0013.5.067	SCREW	((1)+(1))
18	17.0012.4.106	SCREW M4	((1)+(1))
19	17.0019.2.066	WASHER	((1)+(1))
20	15.1431.0.100	SCREW M3-4	((2)+(2)
21	08.6412.6.005	SCREW M6-5	((1)+(1))
22	08.6412.3.010	SCREW M3-10	((1)+(1))
23	08.6712.3.000	NUT M3	((1)+(1))
24	08.6832.3.000	WASHER 3	((1)+(1))
25	08.6050.4.006	SCREW M4-6	((2)+(5))
26	12.1045.0.004	REATINING RING 4	((2)+(2))
27	15.2603.0.800	UPPER SHEAR - CT	(1)
28	15.2604.0.800	LOWER SHEAR - CT	(1)
29	15.2605.0.600	HOLDER KNIFES	(1)
30	15.2607.0.800	ROD (14 - 26)	(1)
30*	15.2623.0.800	ROD (22 - 35)	(1)
31	15.2608.0.600	TRIMMING LEVER CT	(1)
32	15.2606.0.600	RIDER	(1)
33	15.2609.0.100	SCREW	(1)
34	15.2610.0.100	SCREW	(1)
35	15.2611.0.600	COVER CT	(1)
36	19.0041.1.400	BUSHING	(1)
37	17.0012.1.142	SCREW	(1)
38	17.0012.0.605	SCREW	(1)
39	01.5062.0.000	WASHER-SPRING	(1)
40	08.6112.3.005	SCREW M3-5	(3)
41	12.2050.1.005	BEARING	(1)
42	08.6200.4.006	SCREW M4-6	(2)
43	08.6000.3.004	SCREW M3-4	(1)
44	08.6850.6.000	WASHER 6,4	(1)
45	19.0019.6.402	WASHER 6	(1)
46	19.0082.3.439	HOLDER CLOTH	(1)
47	17.0019.0.680	WASHER	(1)

VERSION LTT

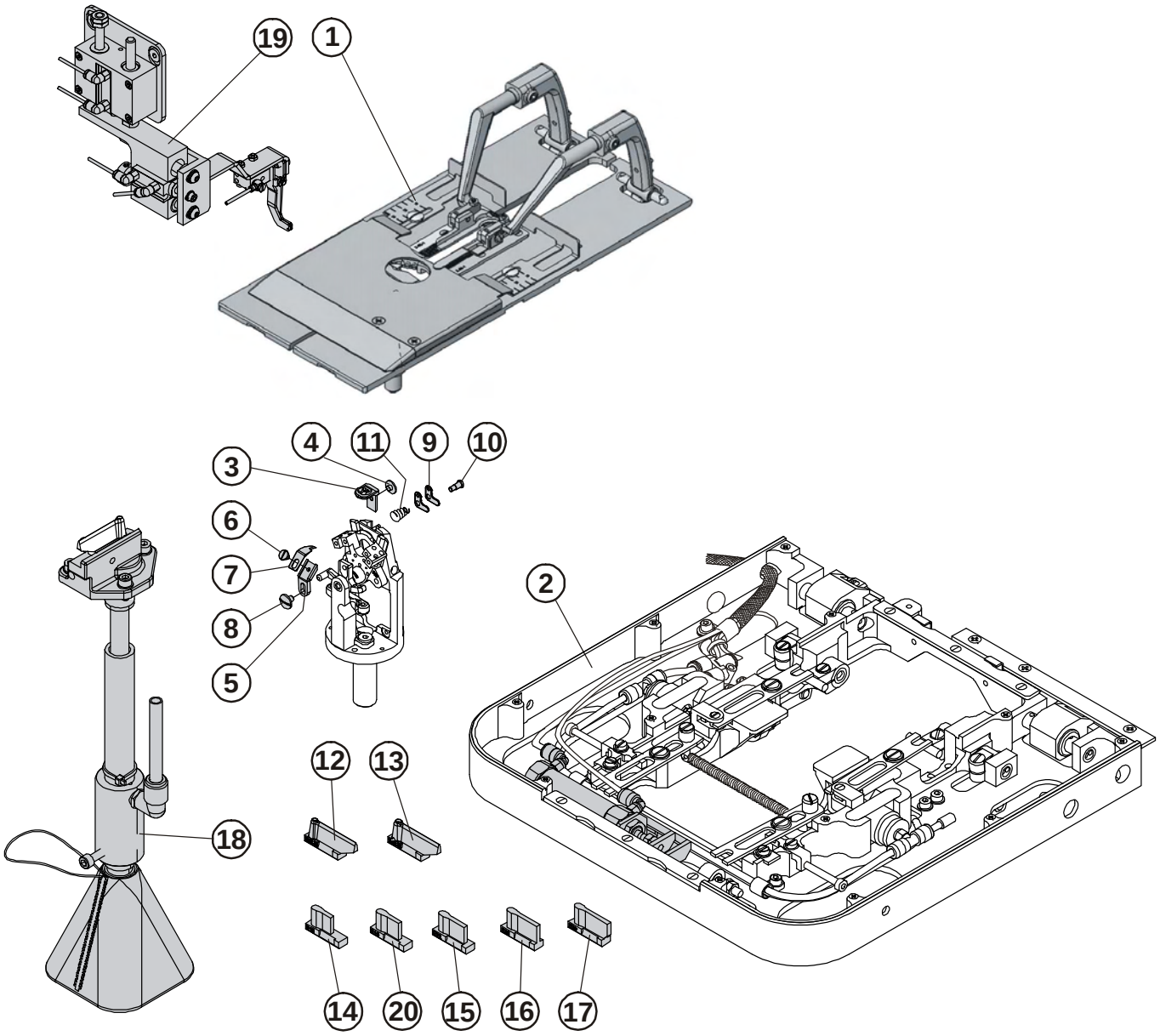

VERSION LTT

DET	PART NUMBER	DESCRIPTION	QTY.
01	15.2700.1.050	LTT-CLAMPING ASSEMBLY	1
02	15.2700.0.051	LTT - ASSEMBLY	1
03	03.7020.0.317	THROAT PLATE	1
04	01.2056.1.000	SCREW-FULL THREADER	1
05	15.4516.0.800	KNIFE BRACKET	1
06	17.0012.0.605	SCREW	1
07	17.0087.0.204	KNIFE	1
08	17.0012.4.106	SCREW M4	1
09	15.4524.0.800	TENSION DISC	2
10	17.0013.1.259	SCREW	1
11	17.0026.2.020	SPRING	1
12	03.7032.0.038	KNIFE 28x42-38	1
13	03.7035.0.038	KNIFE 34x42-38	1
14	03.7040.0.016	CUTTING STEEL 16	1
15	03.7040.0.022	CUTTING STEEL 22	1
16	03.7040.0.026	CUTTING STEEL 26	1
17	03.7040.0.029	CUTTING STEEL 29	1
18	15.5015.0.050	CUTTING ASSY.-BASE	1
19	03.5515.0.009	ES-505 THREAD CATCHER	1
20	03.7040.0.019	CUTTING STEEL 19	1

VERSION LTT + ULTRAFLEX

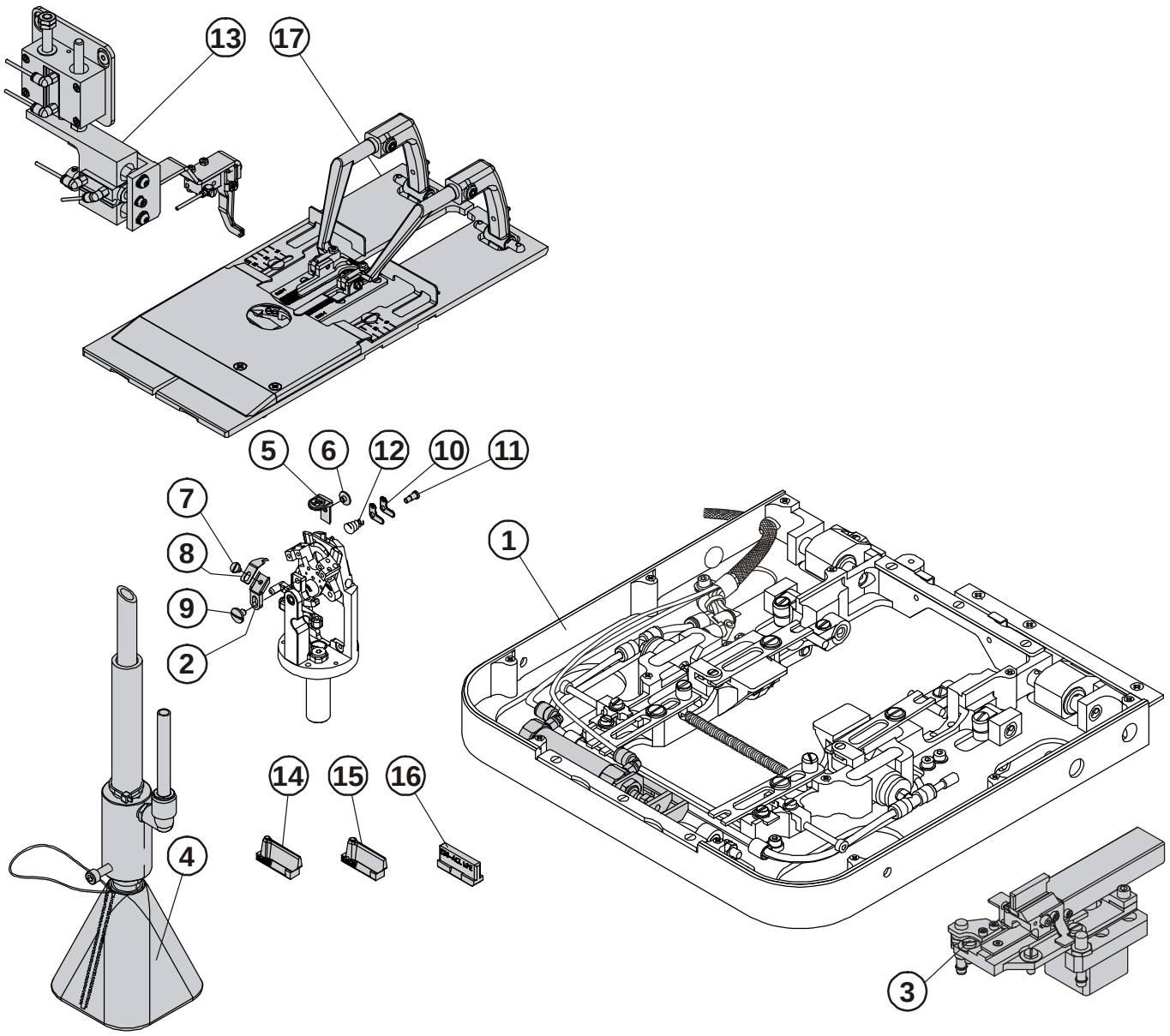

VERSION LTT + ULTRAFLEX

DET	PART NUMBER	DESCRIPTION	QTY.
01	15.2700.0.051	LTT - ASSEMBLY	1
02	15.4516.0.800	KNIFE BRACKET	1
03	15.5206.0.050	ACL ES-505 - ASSEMBLY	1
04	15.5206.0.051	SUCTION ACL - ASSEMBLY	1
05	03.7020.0.317	THROAT PLATE	1
06	01.2056.1.000	SCREW-FULL THREADER	1
07	17.0012.0.605	SCREW	1
08	17.0087.0.204	KNIFE	1
09	17.0012.4.106	SCREW M4	1
10	15.4524.0.800	TENSION DISC	2
11	17.0013.1.259	SCREW	1
12	17.0026.2.020	SPRING	1
13	03.5515.0.009	ES-505 THREAD CATCHER	1
14	03.7032.0.030	KNIFE 28x42-30	1
15	03.7035.0.030	KNIFE 34x42-30	1
16	03.7042.0.030	CUTTING STEEL 30-ACL LPE	1
17	15.2700.1.052	LTT-CLAMPING ASSEMBLY	1

ULTRAFLEX - ASSEMBLY

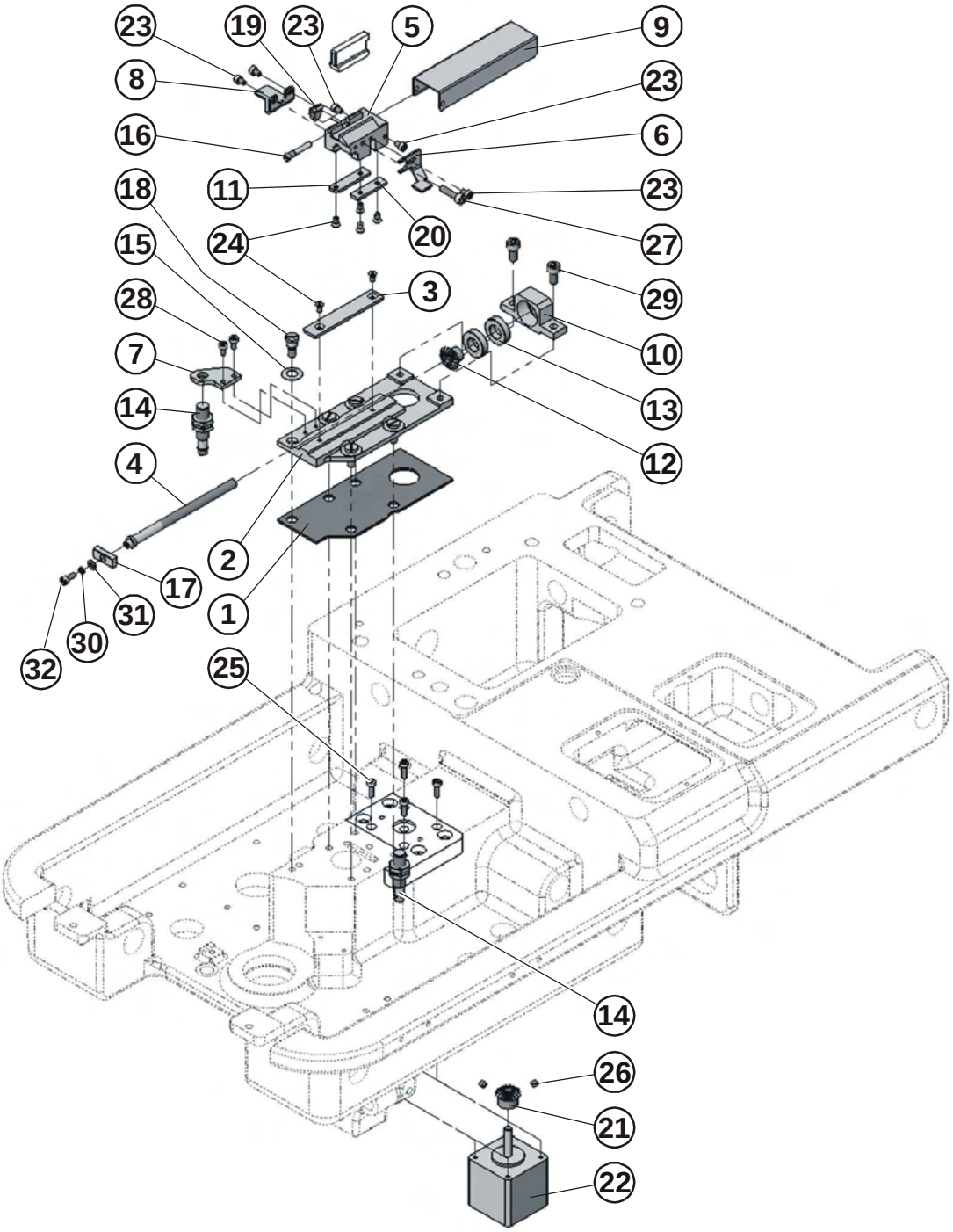

ULTRAFLEX - ASSEMBLY

DET	PART NUMBER	DESCRIPTION	QTY.
01	15.5201.1.990	RUBBER WASHER ULTRAFLEX	1
02	15.5202.1.600	GUIDE ULTRAFLEX	1
03	15.5204.0.800	SHIM	1
04	15.5205.1.300	ENDLESS SCREW	1
05	15.5206.1.600	HOLDER ULTRAFLEX	1
06	15.5207.1.800	SENSOR PLATE ULTRAFLEX	1
07	15.5211.0.800	SENZOR HOLDER	1
08	15.5212.0.800	SENSOR PLATE	1
09	15.5213.0.800	COVER	1
10	15.5214.0.600	BEARING FLANGE	1
11	15.5215.0.800	GUIDE PLATE LEFT	1
12	15.5216.0.500	GEAR	1
13	01.7622.0.000	BEARING	2
14	12.0010.4.093	SENSOR BQ 10	2
15	12.3015.7.016	DISC SPRINGS 14x7,2x0,5	5
16	17.0013.1.415	SCREW	1
17	19.0016.3.410	NUT	1
18	19.0033.2.403	STUD 6.9/M5-5.5/8.8	5
19	19.0063.6.447	CLAMP ACL	1
20	19.0081.4.454	GUIDE PLATE RIGHT	1
21	22.0353.0.000	GEAR	1
22	06.1500.0.040	STEPPERMOTOR ULTRAFLEX - ASSEMBLY	1
23	08.6000.3.005	SCREW M3-5	5
24	08.6100.3.006	SCREW M3-6	6
25	08.6000.3.010	SCREW M3-10	4
26	08.6400.4.004	SCREW M4-4	2
27	08.6000.4.016	SCREW M4-16	1
28	08.6000.3.006	SCREW M3-6	2
29	08.6000.5.010	SCREW M5-10	2
30	08.6800.3.000	WASHER 3	1
31	08.6850.3.000	WASHER 3,2	1
32	08.6000.3.008	SCREW M3-8	1

LTT - ASSEMBLY

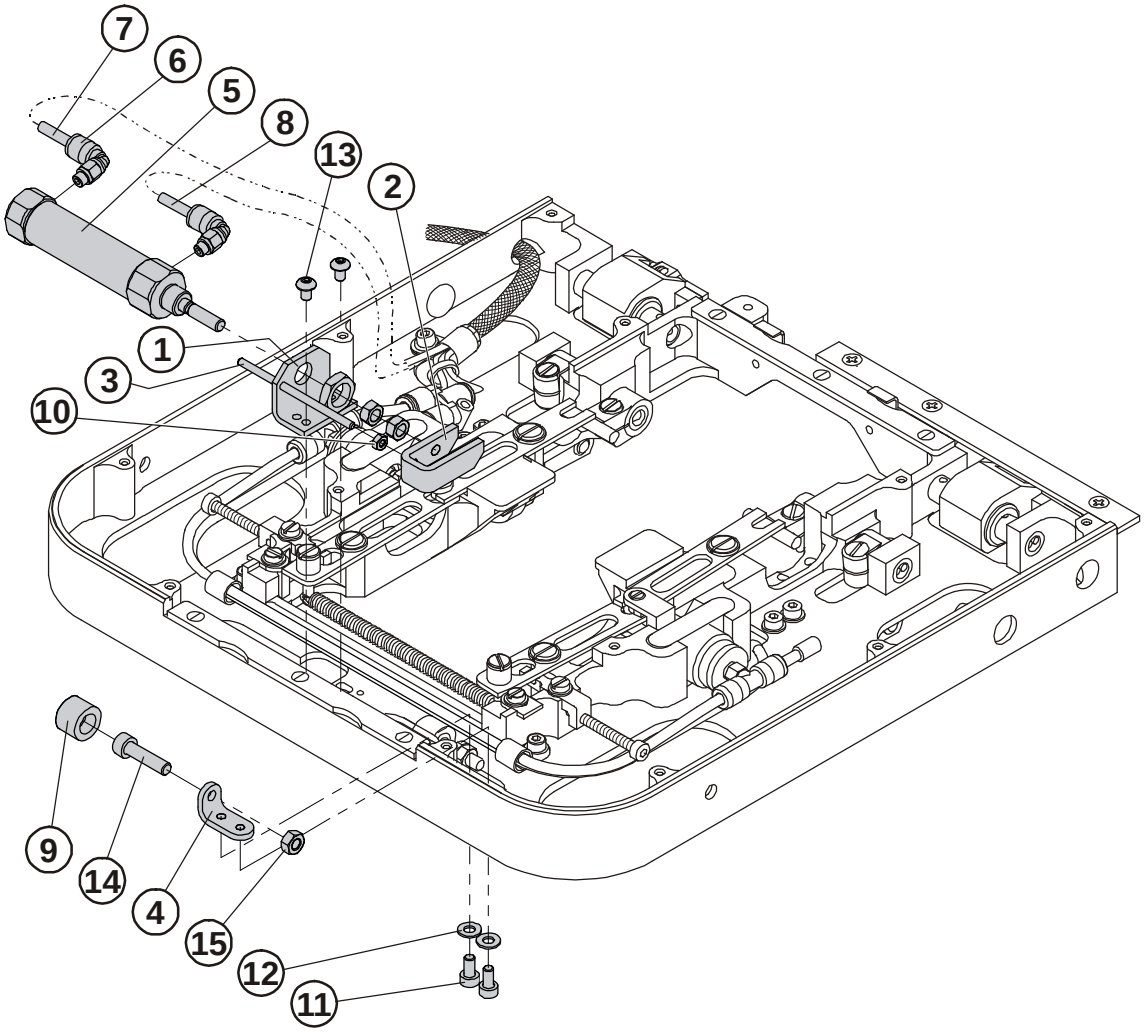

LTT - ASSEMBLY

DET	PART NUMBER	DESCRIPTION	QTY.
01	15.2617.0.800	HOLDER	1
02	15.2618.0.800	ACTUATOR	1
03	15.2619.0.300	GUIDE BAR	1
04	15.2620.0.800	BRACKET	1
05	12.0008.3.411	CONNECTOR	2
06	12.0008.3.416	AIR TUBE- J7A	1
07	12.0008.3.416	AIR TUBE- J7B	1
08	19.0095.1.406	REST	1
09	08.6700.3.000	NUT M3	1
10	08.6000.4.008	SCREW M4-8	2
11	08.6850.4.000	WASHER M4	2
12	08.6200.4.006	SCREW M4-6	2
13	08.6000.5.020	SCREW M5-20	1
14	08.6700.5.000	NUT M5	1
15	12.0008.3.880	CYLINDER	1

LTT + ULTRAFLEX - CLAMPING

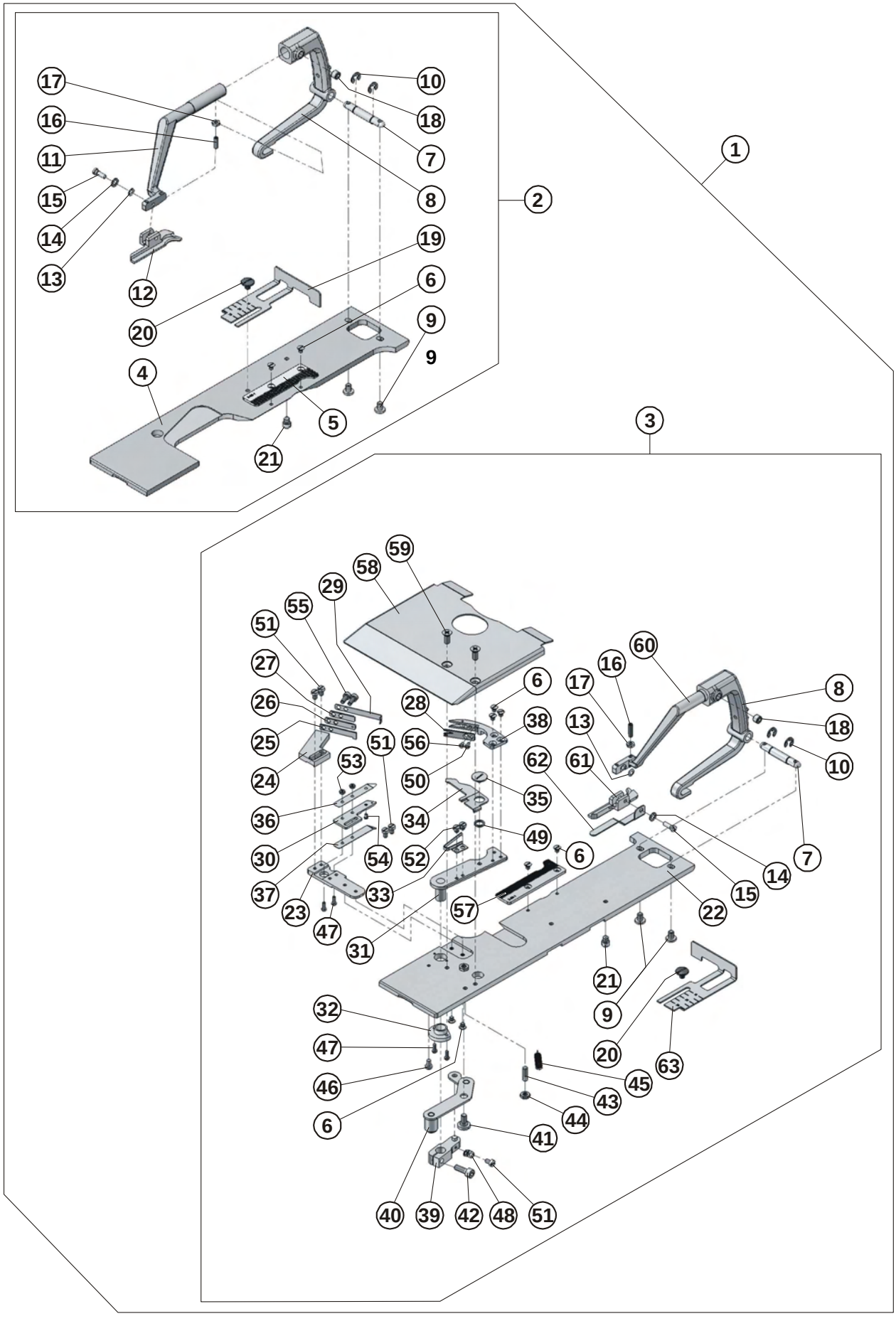

LTT + ULTRAFLEX - CLAMPING

DET	PART NUMBER	DESCRIPTION	QTY.
01	15.2700.1.050	LTT CLAMPING	1
02	15.2701.0.050	LTT CLAMPING L.H. - ASSEMBLY	(1)
03	15.2702.1.050	LTT CLAMPING R.H. - ASSEMBLY	(1)
04	15.2701.0.800	PLATE LEFT - LTT	((1))
05	03.7050.0.007	CLAMP MAT L.H. 2-50-1	((1))
06	15.1431.0.100	SCREW M3-4	((2)+(7))
07	15.2503.0.300	CLAMP ARM STUD	((1)+(1))
08	15.2504.0.700	CLAMP ARM BASE	((1)+(1))
09	08.6050.4.006	SCREW M4-6	((2)+(2))
10	12.1045.0.004	RETAINING RING 4	((2)+(2))
11	15.2505.0.700	L.H.CLAMP ARM	((1))
12	SEE PAGE 3-83	CLAMP FOOT LEFT	((1))
13	17.0019.2.066	WASHER	((1)+(1)
14	08.6832.3.000	WASHER 3	((1)+(1))
15	17.0013.5.067	SCREW	((1)+(1))
16	08.6412.3.012	SCREW M3-10	((1)+(1))
17	08.6712.3.000	NUT M3	((1)+(1))
18	08.6412.6.005	SCREW M6-5	((1)+(1))
19	19.0082.6.421	L.H. CLOTH GAUGE	((1))
20	17.0012.4.106	SCREW M4	((1)+(1))
21	15.2023.0.300	SCREW 6h10-4/M4x0.5-4.5	((1)+(1))
22	15.2702.1.800	PLATE RIGHT - LTT	((1))
23	15.2719.0.600	HOLDER	((1))
24	15.2718.0.600	HOLDER KNIFE	((1))
25	15.2723.0.800	FIXING KNIFE	((1))
26	15.2724.0.800	SPRING LOWER	((1))
27	15.2725.0.800	SPRING UPPER	((1))
28	19.0082.1.405	TREATING PLATE	((1))
29	15.2726.0.800	GUIDE PLATE	((1))
30	19.0082.6.432	GRASPING FIXING PLATE	((1))
31	15.2703.1.800	LEVER	((1))
32	15.2708.1.400	BUSHING	((1))
33	15.2717.0.800	SPRING	((1))
34	15.2706.1.800	LOWER THREAD OPENER	((1))
35	15.2715.0.100	SCREW	((1))
36	19.0081.5.452	GIMP GRASPING	((1))
37	19.0082.3.438	LOWER THREAD GRASPING	((1))
38	19.0087.0.424	MOVING KNIFE	((1))
39	15.2720.0.600	LEVER	((1))
40	15.2711.0.050	LEVER - ASSEMBLY	((1))
41	15.2716.0.100	SCREW	((1))
42	08.6002.4.012	SCREW M4-12	((1))
43	15.4521.0.300	STUD	((1))
44	08.6712.4.000	NUT M4	((2))
45	17.0026.3.173	SPRING	((1))
46	08.6010.3.005	SCREW M3-5	((1))
47	15.1433.0.100	SCREW M2-6	((4))
48	15.2721.0.800	HITCH SPRING	((1))
49	15.2722.0.400	DISTANCE RING	((1))
50	15.1434.0.100	SCREW M2-4	((2))

LTT + ULTRAFLEX - CLAMPING

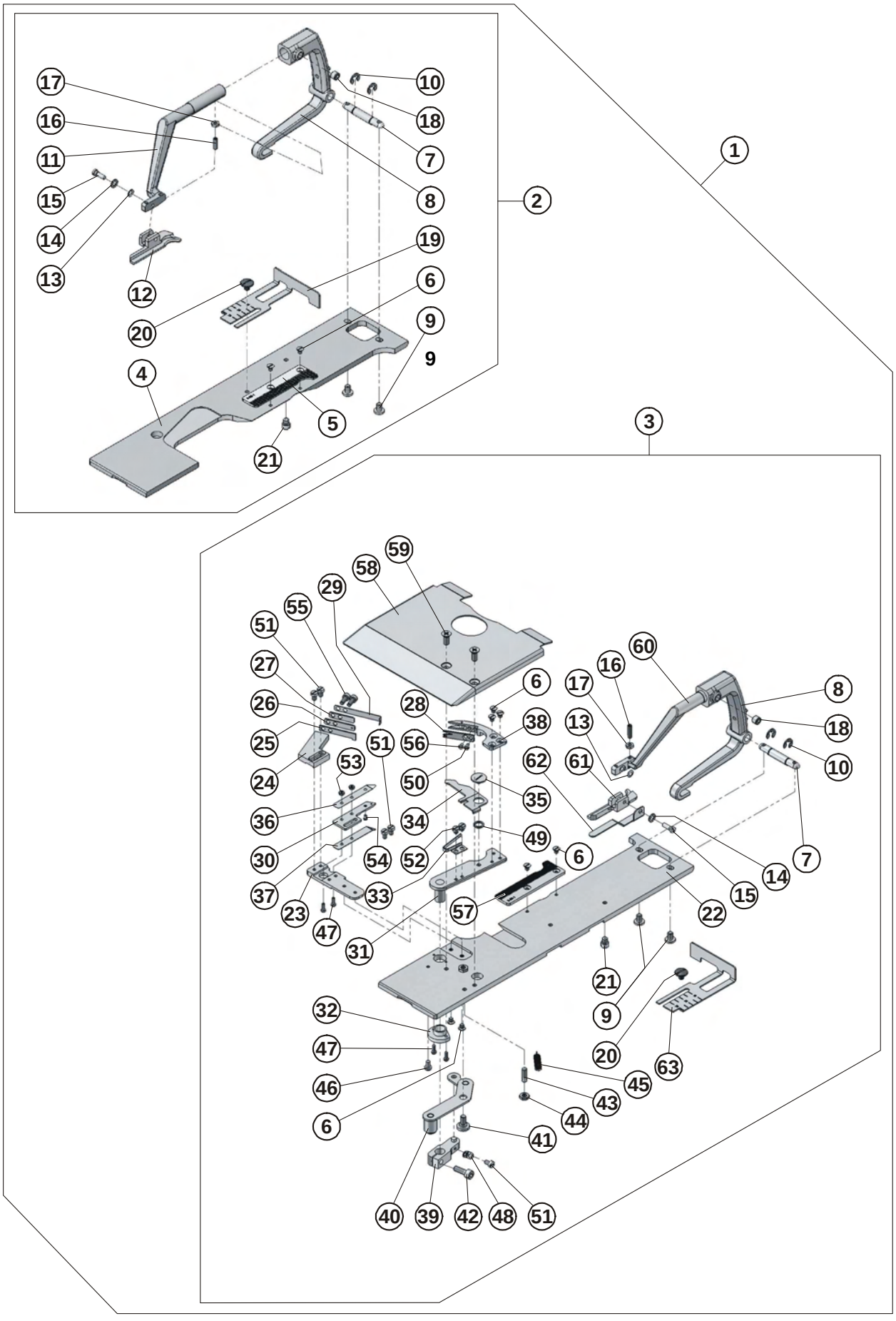

LTT + ULTRAFLEX - CLAMPING



DET	PART NUMBER	DESCRIPTION	QTY.
51	15.1432.0.100	SCREW M3-5	((5))
52	08.6017.3.003	SCREW M2-6	((2))
53	08.6702.2.000	NUT M2	((4))
54	15.2728.0.300	PIN	((1))
55	08.6000.3.008	SCREW M3-8	((2))
56	15.1434.0.100	SCREW M2-4	((2))
57	SEE PAGE 3-83	CLAMP MAT R.H.	((1))
58	19.0004.1.402	COVER ASSEMBLY	((1))
59	15.1427.0.100	SCREW M4-10	((2))
60	15.2506.0.700	R.H.CLAMP ARM	((1))
61	SEE PAGE 3-83	CLAMP FOOT RIGHT	((1))
62	19.0082.3.439	HOLDER CLOTH	((1))
63	19.0082.6.422	R.H. CLOTH GAUGE	((1))

VERSION RDE

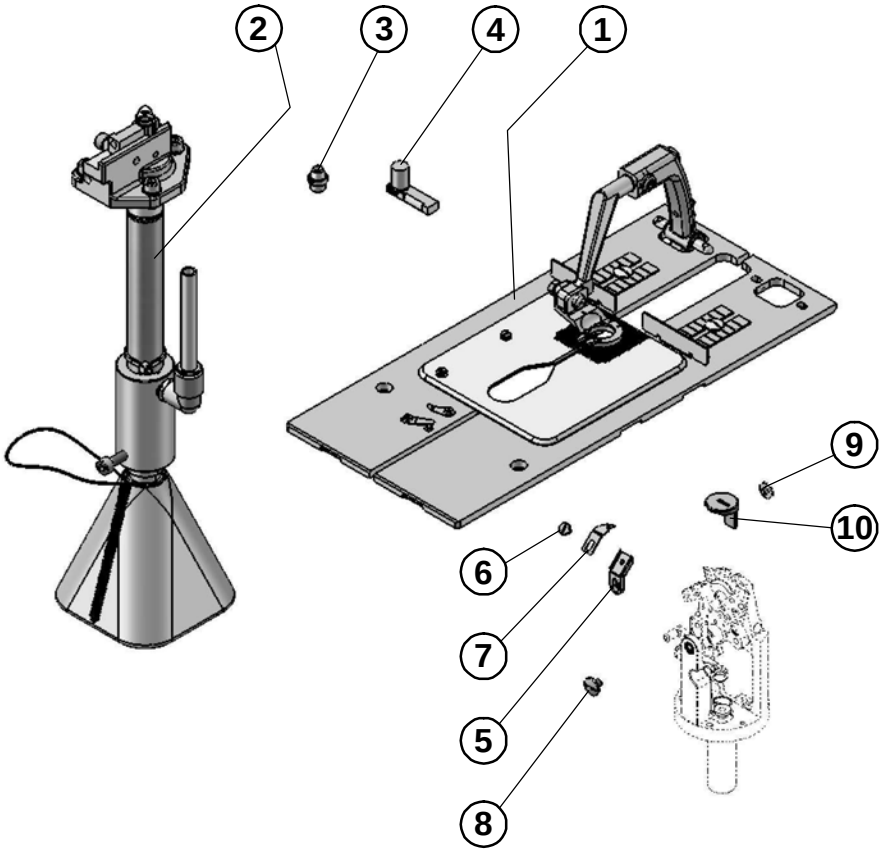

VERSION RDE

DET	PART NUMBER	DESCRIPTION	QTY.
01	15.2820.0.050	RDE - CLAMPING ASSEMBLY	1
02	15.5023.0.050	CUTTING RDE ASSEMBLY-BASE	1
03	17.0042.6.083	KNIFE n5	1
04	03.7041.0.007	CUTTING STEEL 7 R	1
05	15.4516.0.800	KNIFE BRACKET	1
06	17.0012.0.605	SCREW	1
07	17.0087.0.204	KNIFE	1
08	17.0012.4.106	SCREW M4	1
09	01.2056.1.000	SCREW-FULL THREADER	1
10	10.4012.2.019	THROAT PLATE	1

RDE - CLAMPING - ASSEMBLY

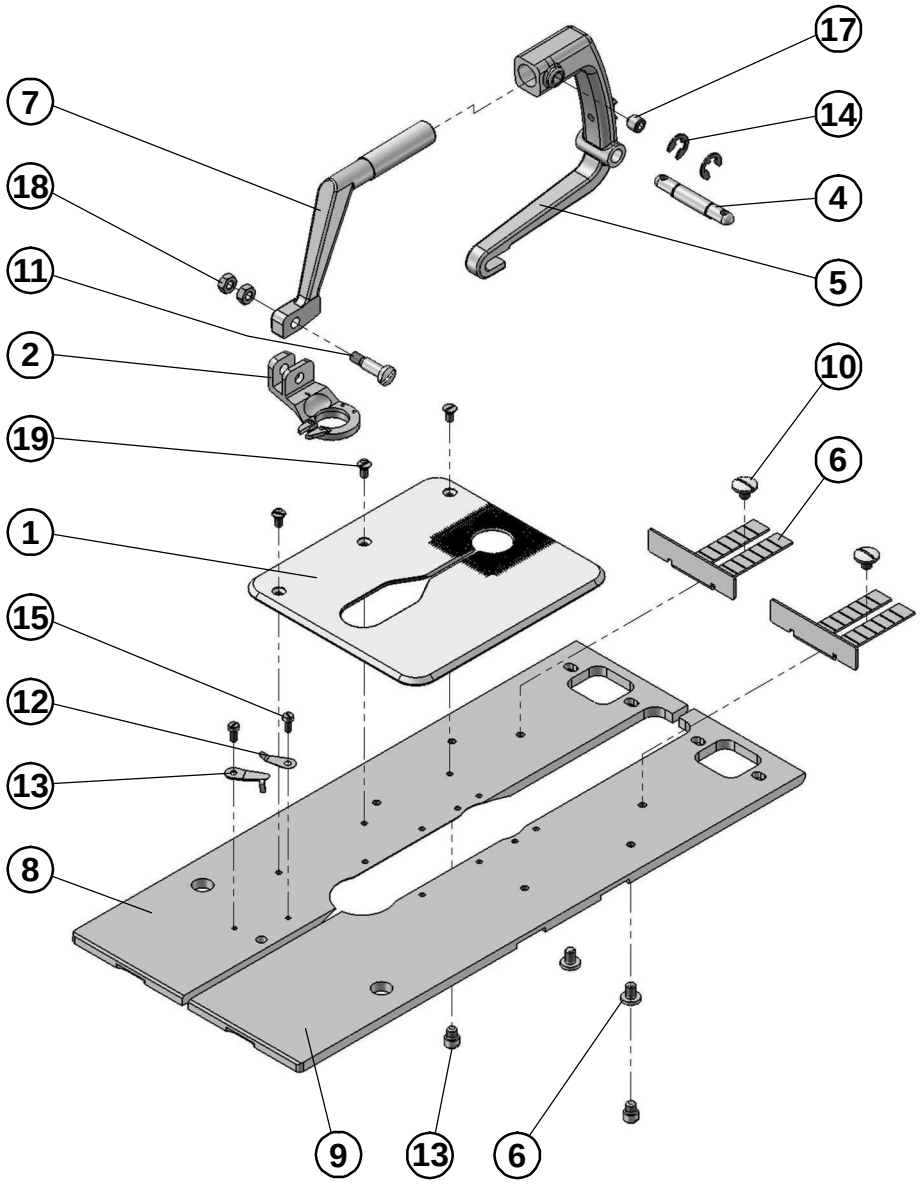

RDE - CLAMPING - ASSEMBLY

DET	PART NUMBER	DESCRIPTION	QTY.
01	03.7050.0.017	CLAMP MAT	1
02	03.7067.0.105	CLAMP FOOT 5	1
03	15.2023.0.300	SCREW 6h6-4/M4x0.5-4.5	2
04	15.2503.0.300	CLAMP ARM STUD	1
05	15.2504.0.700	CLAMP ARM BASE	1
06	15.2507.0.800	GAUGE	2
07	15.2812.0.700	L.H.CLAMP ARM	1
08	15.2821.0.800	PLATE LEFT - RDE	1
09	15.2822.0.800	PLATE RIGHT - RDE	1
10	17.0012.4.106	SCREW M4	2
11	17.0013.1.485	SCREW	1
12	17.0082.5.884	CLIPS	1
13	17.0087.0.169	KNIFE	1
14	12.1045.0.005	E-CLIP 5	2
15	08.6012.7.006	SCREW M2,5-6	2
16	08.6050.4.006	SCREW M4-6	2
17	08.6402.6.006	SCREW M6-6	1
18	08.6702.4.000	NUT M4	2
19	08.6112.3.006	SCREW M3x6	3

THREAD CATCHER - ASSEMBLY

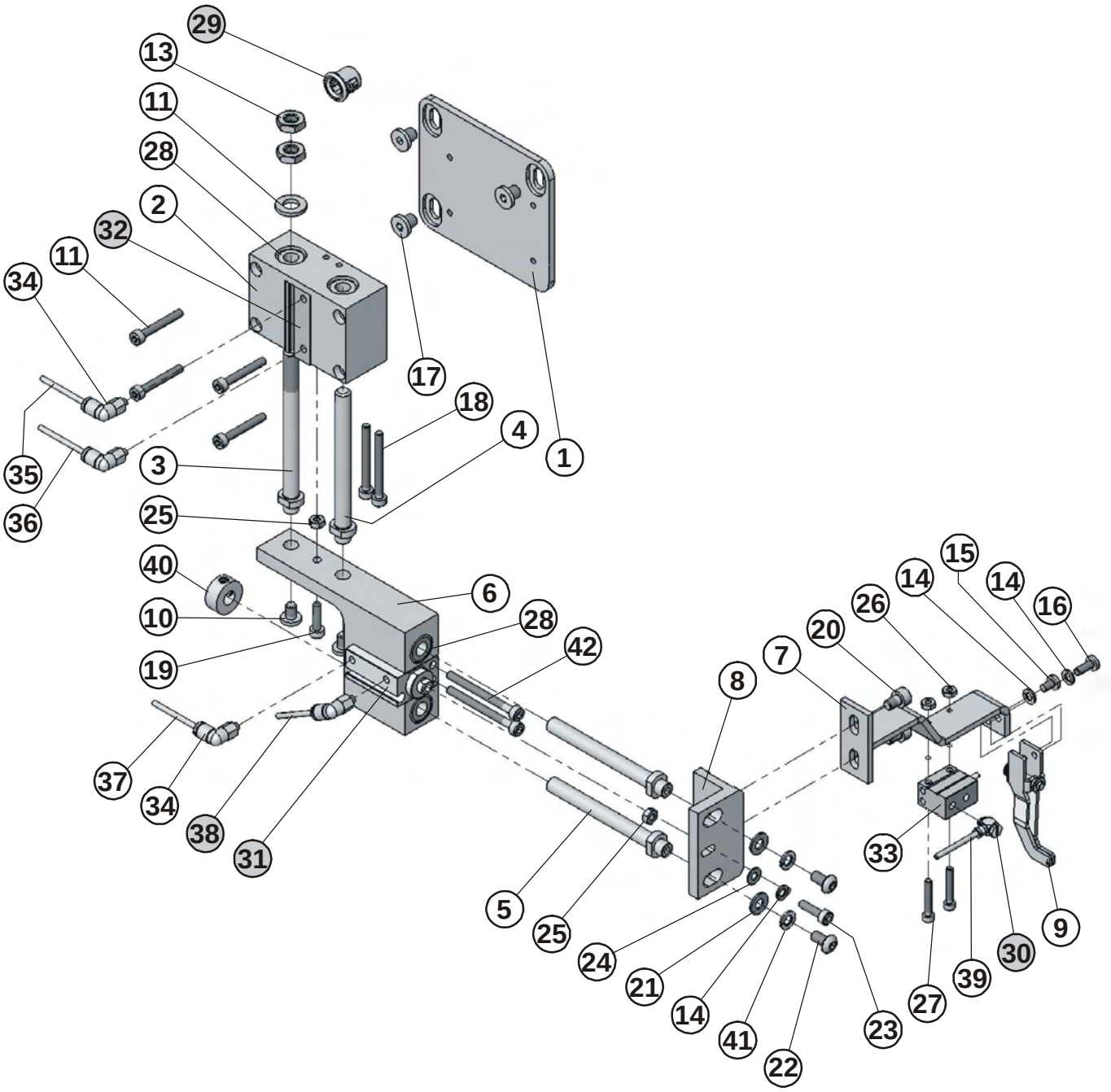

THREAD CATCHER - ASSEMBLY

DET	PART NUMBER	DESCRIPTION	QTY.
01	15.1501.0.800	THREAD CATCHER BASE	1
02	15.1502.0.600	BLOCK	1
03	15.1503.0.300	STUD	1
04	15.1511.0.300	STUD	1
05	15.1504.0.300	STUD	2
06	15.1505.0.600	BRACKET	1
07	15.1507.0.000	HOLDER	1
08	15.1506.0.600	HOLDER	1
09	15.1508.0.050	THREAD CLAMP	1
10	08.6050.4.006	SCREW M4-6	2
11	08.6000.3.022	SCREW M3-22	4
12	08.6850.6.000	WASHER 6,4	1
13	08.6710.6.000	NUT M6	2
14	08.6802.3.000	SPRING WASHER M3	3
15	15.1422.0.100	SCREW M3-5	1
16	15.1425.0.100	SCREW M3-8	1
17	08.6050.5.006	SCREW M5-6	3
18	08.6000.3.030	SCREW M3-30	2
19	08.6000.3.012	SCREW M3-12	1
20	08.6000.4.006	SCREW M4-6	2
21	08.6852.4.000	WASHER M4	2
22	08.6202.4.008	SCREW M4-8	2
23	08.6002.3.014	SCREW M3-14	1
24	08.6852.3.000	WASHER M3	1
25	08.6702.3.000	NUT M3	2
26	08.6702.7.000	NUT M2,5	2
27	08.6000.7.016	SCREW M2,5-16	2
28	12.2070.0.020	BEARING	4
29	12.0008.4.214	BUSHING	1
30	12.0008.3.826	CONNECTOR	1
31	12.0008.3.631	CYLINDER	1
32	12.0008.3.866	CYLINDER	1
33	12.0008.3.630	CYLINDER	1
34	12.0008.3.784	CONNECTOR	2
35	12.0008.3.749	AIR TUBING J10A	1
36	12.0008.3.749	AIR TUBING J10B	1
37	12.0008.3.749	AIR TUBING J11A	1
38	12.0008.3.749	AIR TUBING J11B	1
39	12.0008.3.749	AIR TUBING J12A	1
40	15.1510.0.400	ADJUSTING RING	1
41	08.6802.4.000	SPRING WASHER M4	2
42	08.6000.3.035	SCREW M3-35	2
43	12.0008.3.815	SPEED CONTROLER	2
		PART OF THE KIT PNEU	

PEDAL

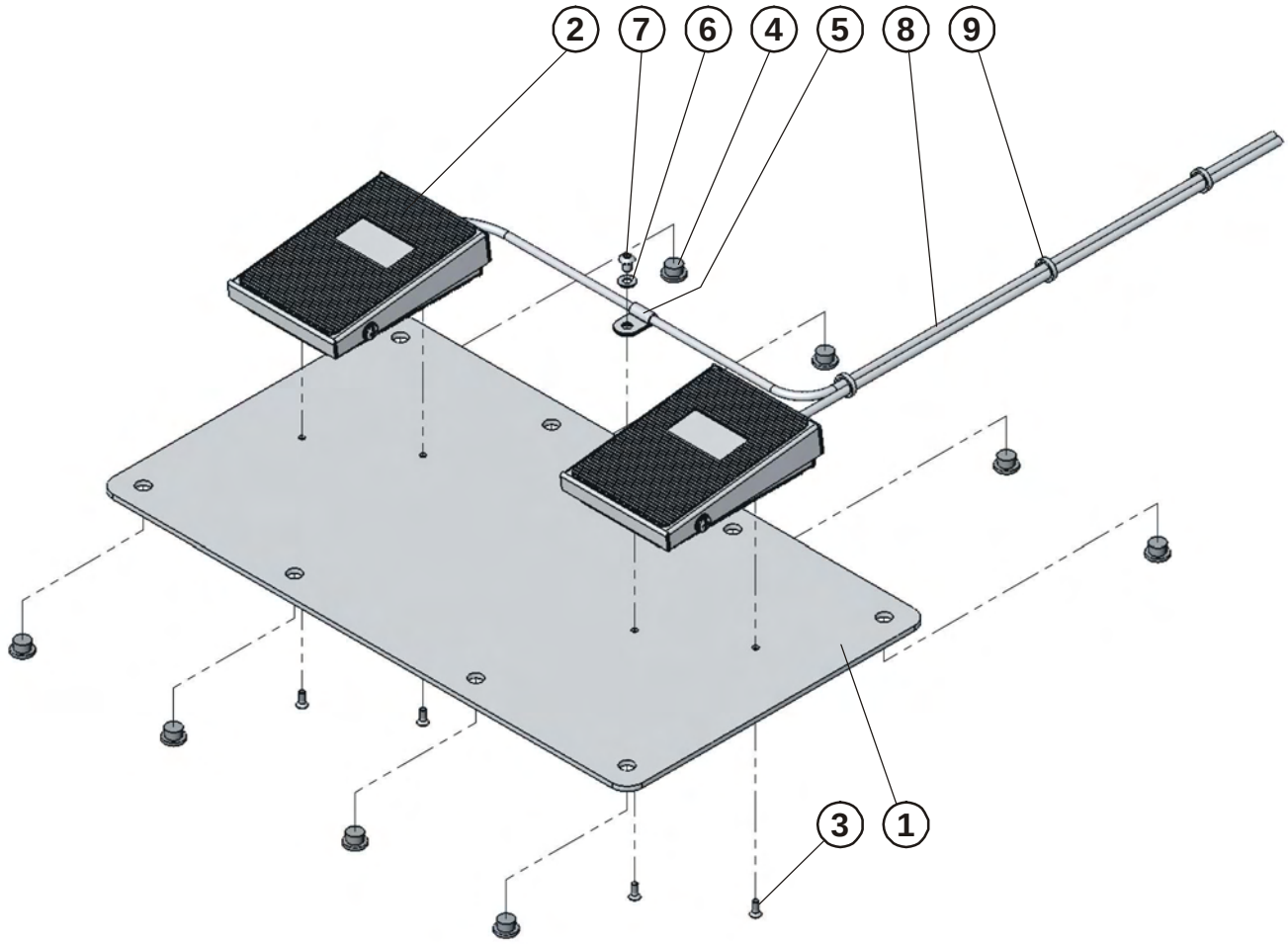

PEDAL

DET	PART NUMBER	DESCRIPTION	QTY.
01	04.9015.0.361	PEDAL HOLDER	1
02	12.0010.4.174	PEDAL	2
03	08.6100.3.008	SCREW M3-8	4
04	17.0094.0.029	PLUG	8
05	12.0008.4.277	CLAMP	1
06	08.6852.4.000	WASHER M4	1
07	08.6202.4.006	SCREW M4-6	1
08	06.1500.0.025	PEDAL CABLE-X5	1
09	12.0008.4.290	CABLE TIE 2x100	3

ACCESSORIES

Cutting steel	Part Number	Lenght (mm)	AF	AF		CT		CT + I	CT + RDE	LTT	LTT + UFX	RDE
				+ UFX	+ I	14 - 26	22 - 35	14 - 26				
	03.7040.0.010	10	✓		✓					✓		
	03.7040.0.012	12	✓		✓					✓		
	03.7040.0.013	13	✓		✓	✓		✓		✓		
	03.7040.0.014	14	✓		✓	✓		✓		✓		
	03.7040.0.016	16	○		○	✓		✓		○		
	03.7040.0.018	18	✓		✓	✓		✓		✓		
	03.7040.0.019	19	●		●	●		●		●		
	03.7040.0.020	20	✓		✓	○		○		✓		
	03.7040.0.022	22	○		○	✓	✓	✓		○		
	03.7040.0.024	24	✓		✓	○	●	○		✓		
	03.7040.0.026	26	○		○	✓	✓	✓		○		
	03.7040.0.029	29	✓		✓		○			○		
	03.7040.0.032	32	○				○			✓		
	03.7040.0.035	35	✓		✓		✓			✓		
	03.7040.0.038	38	✓		✓					✓		
	03.7040.0.050	50	✓		✓					✓		
	03.7042.0.030	30		●							●	
	03.7042.0.038	38		✓							✓	
	03.7041.0.005	Ø 5							✓			✓
	03.7041.0.007	Ø 7							●			●

Cutting Knife	Part Number	Eye Stepe (mm)	Max. Cutting Length (mm)	AF	AF		CT		CT + I	CT + RDE	LTT	LTT + UFX	RDE
					+ UFX	+ I	14 - 26	22 - 35	14 - 26				
	03.7039.0.032	-	32	✓	✓	✓	✓	✓	✓		✓	✓	
	03.7039.0.038	-	38	✓	✓	✓					✓	✓	
	03.7039.0.050	-	50	✓	✓	✓					✓	✓	
	03.7030.0.038	2,2 x 3,0	38	✓	✓	✓					✓	✓	
	03.7030.0.050	2,2 x 3,0	50	✓	✓	✓					✓	✓	
	03.7032.0.030	2,8 x 4,2	30	✓	●	✓	✓	✓	✓		✓	●	
	03.7032.0.032	2,8 x 4,2	32	✓	✓	✓	✓	✓	✓		✓	✓	
	03.7032.0.038	2,8 x 4,2	38	●	✓	●	●	●	●		●	✓	
	03.7032.0.050	2,8 x 4,2	50	✓	✓	✓					✓	✓	
	03.7033.0.032	3,0 x 4,6	32	✓	✓	✓	✓	✓	✓		✓	✓	
	03.7033.0.038	3,0 x 4,6	38	✓	✓	✓					✓	✓	
	03.7033.0.050	3,0 x 4,6	50	✓	✓	✓					✓	✓	
	03.7034.0.026	3,2 x 5,0	26	✓	✓	✓	✓	✓	✓		✓	✓	
	03.7034.0.030	3,2 x 5,0	30	✓	✓	✓	✓	✓	✓		✓	✓	
	03.7034.0.038	3,2 x 5,0	38	○	✓	○					✓	✓	
	03.7034.0.050	3,2 x 5,0	50	✓	✓	✓					✓	○	
	03.7035.0.030	3,4 x 4,2	30	✓	○	✓	✓	✓	✓		✓	✓	
	03.7035.0.038	3,4 x 4,2	38	○	✓	○					○	✓	
	03.7035.0.050	3,4 x 4,2	50	✓	✓	✓					✓	✓	
	17.0042.6.087	Ø 1,5								✓			✓
	17.0042.6.088	Ø 2								○			○
	17.0042.6.089	Ø 2,5								✓			✓
	17.0042.6.090	Ø 3								○			○
	17.0042.6.086	Ø 3,5								✓			✓
	17.0042.6.082	Ø 4								✓			✓
	17.0042.6.083	Ø 5								●			●
	17.0042.6.084	Ø 6								○			○
	17.0042.6.085	Ø 7								○			○

●	FACTORY SET UP
○	STANDARD ACCESSORY
✓	OPTIONAL ACCESSORY

ACCESSORIES

Clamp Foot	Part Number (Right / left)	Length (mm)	Width (mm)	AF	AF		CT		CT + I	CT + RDE	LTT	LTT + UFX	RDE
					+ UFX	+ I	14 - 26	22 - 35	14 - 26				
	03.7061.0.028 / 128	28	1,5										
	19.0066.7.416 / 417	24	2,9										
	19.0066.7.418 / 419	32	2,9				●		●	●			
	19.0066.7.420 / 421	36	2,9	●	●	●		●					
	19.0066.7.422 / 423	40	6,5								●		
	03.7068.0.040 / 140	40	6,5									●	
	03.7068.0.040 / 140	40	6,5									✓	
	03.7069.0.040 / 140	40	6,5								✓		
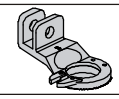	03.7067.0.105	Ø5											✓
	03.7067.0.108	Ø8											●

Clamp Mat	Part Number (Right / left)	Length (mm)	Width (mm)	AF	AF		CT		CT + I	CT + RDE	LTT	LTT + UFX	RDE
					+ UFX	+ I	14 - 26	22 - 35	14 - 26				
	03.7050.0.002 / 001			●	●	●							
	03.7050.0.004 / 003						●		●				
	03.7050.0.008 / 007										●		
	03.7050.0.010 / 009									●			
	03.7050.0.012 / 011							●					
	03.7050.0.013 / 014											●	
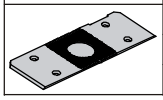	10.2559.1.010												✓
	10.2559.1.104												●

Clamping assembly	Part Number		AF	CT		LTT	LTT + UFX	RDE
	Left	Right		14 - 26	22-35			
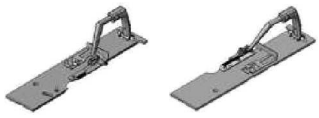	15.2501.0.050	15.2502.0.050	X					
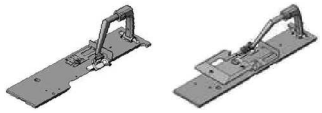	15.2601.0.050	15.2602.0.050		X				
	15.2601.0.050	15.2622.0.050			X			
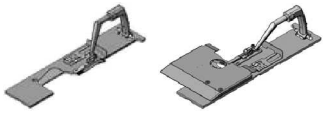	15.2701.0.050	15.2702.0.050				X		
	15.2701.0.051	15.2702.1.051					X	
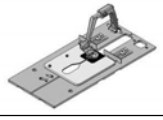	15.2820.0.050							X

INDEX

PART NUMBER	PAGE	DET	QTY
01.2056.1.000			
01.2056.1.000	3-55	02	1
01.2056.1.000	3-59	06	1
01.2056.1.000	3-65	04	1
01.2056.1.000	3-67	06	1
01.2056.1.000	3-77	09	1
01.4549.0.000	3-13	55	(3)
01.5062.0.000	3-63	39	(1)
01.5683.0.000	3-29	68	1
01.6551.0.000	3-11	40	(1)
01.7447.1.000	3-11	44	(1)
01.7622.0.000	3-69	13	2
01.7804.0.000	3-9	05	1
01.7805.0.000	3-9	13	2
01.7805.0.000	3-37	01	3
02.0579.1.111			
02.0579.1.111	3-7	28	(1)
02.0579.1.111	3-53	09	5
03.5515.0.009			
03.5515.0.009	3-65	19	1
03.5515.0.009	3-67	13	1
03.5515.0.017	3-11	34	1
03.7011.0.000	3-29	58	1
03.7011.0.100			
03.7011.0.100	3-29	59	1
03.7020.0.317	3-55	03	1
03.7020.0.317	3-65	03	1
03.7020.0.317	3-67	05	1
03.7021.0.319	3-59	08	1
03.7032.0.030	3-67	14	1
03.7032.0.038	3-55	08	1
03.7032.0.038	3-59	19	1
03.7032.0.038	3-65	12	1
03.7034.0.038	3-55	09	1
03.7035.0.030	3-67	15	1
03.7035.0.038	3-55	10	1
03.7035.0.038	3-65	13	1
03.7040.0.016			
03.7040.0.016	3-55	11	1
03.7040.0.016	3-65	14	1
03.7040.0.019	3-55	12	1
03.7040.0.019	3-59	20	1
03.7040.0.019	3-65	20	1
03.7040.0.020	3-59	21	1
03.7040.0.022	3-55	13	1
03.7040.0.022	3-65	15	1
03.7040.0.024	3-59	22	1
03.7040.0.026	3-55	14	1
03.7040.0.026	3-65	16	1
03.7040.0.029	3-65	17	1
03.7040.0.032	3-55	15	1
03.7041.0.007	3-77	04	1
03.7042.0.030	3-67	16	1
03.7050.0.001	3-57	17	((1))
03.7050.0.002	3-57	18	((1))
03.7050.0.003	3-63	12	((1))
03.7050.0.006	3-63	13	((1))
03.7050.0.007	3-73	05	((1))
03.7050.0.017	3-79	01	1
03.7067.0.105	3-79	02	1
04.9015.0.000			
04.9015.0.000	3-51	01	1
04.9015.0.361	3-83	01	1
04.9015.0.900	3-51	11	1
05.1322.0.000			
05.1322.0.000	3-43	09	1
05.1322.0.000	3-53	05	1
06.0120.0.000			
06.0120.0.000	3-43	31	1
06.1500.0.022	3-23	02	1
06.1500.0.023	3-25	19	1
06.1500.0.025	3-83	08	1
06.1500.0.040	3-69	22	1
06.8015.0.004	3-49	06	1
07.0000.0.024			
07.0000.0.024	3-17	02	6
07.0000.0.024	3-23	01	4
07.6600.0.004	3-17	27	1
07.6600.0.004	3-61	18	3
08.6000.0.090			
08.6000.0.090	3-39	13	2
08.6000.3.004	3-63	43	(1)
08.6000.3.005	3-23	14	2
08.6000.3.005	3-27	33	4
08.6000.3.005	3-61	15	1
08.6000.3.005	3-69	23	5
08.6000.3.006	3-3	06	4
08.6000.3.006	3-3	29	(4)
08.6000.3.006	3-25	11	2
08.6000.3.006	3-31	05	2
08.6000.3.006	3-35	10	2
08.6000.3.006	3-41	14	3
08.6000.3.006	3-69	28	2
08.6000.3.008	3-21	19	1
08.6000.3.008	3-25	13	2
08.6000.3.008	3-35	35	(1)
08.6000.3.008	3-69	32	1
08.6000.3.008	3-75	55	((2))
08.6000.3.010	3-17	25	4
08.6000.3.010	3-69	25	4
08.6000.3.012	3-81	19	1
08.6000.3.020	3-43	27	2
08.6000.3.022	3-81	11	4
08.6000.3.030	3-35	37	(2)
08.6000.3.030	3-81	18	2
08.6000.3.035	3-81	42	2
08.6000.3.050	3-15	25	2
08.6000.3.050	3-45	16	2
08.6000.4.005			
08.6000.4.005	3-21	16	2
08.6000.4.006	3-17	31	3
08.6000.4.006	3-31	16	1
08.6000.4.006	3-39	09	2
08.6000.4.006	3-41	16	1
08.6000.4.006	3-81	20	2
08.6000.4.008	3-9	19	1
08.6000.4.008	3-17	06	4
08.6000.4.008	3-45	20	2
08.6000.4.008	3-61	11	2
08.6000.4.008	3-71	10	2
08.6000.4.010	3-9	39	(8)
08.6000.4.010	3-23	21	1
08.6000.4.012	3-5	07	(2)
08.6000.4.012	3-9	42	(2)
08.6000.4.012	3-21	11	4
08.6000.4.012	3-23	11	1
08.6000.4.012	3-43	29	2
08.6000.4.016	3-69	27	1
08.6000.4.035	3-17	47	2
08.6000.5.008			
08.6000.5.008	3-11	18	2
08.6000.5.008	3-61	08	3
08.6000.5.010	3-9	26	2
08.6000.5.010	3-25	08	11
08.6000.5.010	3-37	11	1
08.6000.5.010	3-41	18	2
08.6000.5.010	3-69	29	2
08.6000.5.012	3-23	30	(2)
08.6000.5.012	3-35	20	3

e-mail: service@amfreece.cz; parts@amfreece.cz; website: www.amfreece.com
Phone: +420 582 309 286; Fax: +420 582 360 606

INDEX

PART NUMBER	PAGE	DET	QTY
08.6000.5.012	3-37	15	1
08.6000.5.012	3-43	06	2
08.6000.5.012	3-45	13	3
08.6000.5.012	3-45	13*	1
08.6000.5.016	3-25	10	3
08.6000.5.016	3-27	37	1
08.6000.5.016	3-35	16	4
08.6000.5.016	3-35	19	1
08.6000.5.016	3-37	41	(1)
08.6000.5.016	3-45	28	4
08.6000.5.020			
08.6000.5.020	3-11	04	1
08.6000.5.020	3-21	04	4
08.6000.5.020	3-23	06	4
08.6000.5.020	3-61	13	1
08.6000.5.020	3-71	13	1
08.6000.5.022	3-35	33	1
08.6000.5.025	3-9	51	(1)
08.6000.6.016	3-13	63	(1)
08.6000.6.016	3-37	22	4
08.6000.6.016	3-39	11	2
08.6000.6.020	3-13	62	(3)
08.6000.6.020	3-21	22	2
08.6000.6.030	3-11	32	1
08.6000.7.016	3-31	27**	2
08.6000.7.016	3-81	27	2
08.6000.8.090			
08.6000.8.090	3-39	12	2
08.6000.8.420	3-9	23	4
08.6002.3.014	3-81	23	1
08.6002.3.030	3-31	49**	(2)
08.6002.4.012	3-73	42	((1))
08.6010.3.005	3-73	46	((1))
08.6010.5.012	3-17	18	4
08.6012.7.006	3-79	15	2
08.6017.3.003	3-75	52	((2))
08.6032.3.005	3-31	38	(2)
08.6032.3.005	3-31	38**	(2)
08.6032.3.008	3-23	20	2
08.6032.3.016	3-31	34**	1
08.6032.5.010	3-31	44	(2)
08.6050.4.006			
08.6050.4.006	3-17	35	2
08.6050.4.006	3-23	28	(1)
08.6050.4.006	3-57	15	((2)+(2))
08.6050.4.006	3-63	25	((2)+(5))
08.6050.4.006	3-73	09	((2)+(2))
08.6050.4.006	3-79	16	2
08.6050.4.006	3-81	10	2
08.6050.5.006	3-11	24	1
08.6050.5.006	3-17	33	4
08.6050.5.006	3-81	17	3
08.6050.5.008	3-13	51	(3)
08.6050.5.010	3-25	12	2
08.6100.3.006			
08.6100.3.006	3-27	19	3
08.6100.3.006	3-69	24	6
08.6100.3.008	3-83	03	4
08.6100.5.016	3-23	12	1
08.6112.3.005	3-63	40	(3)
08.6112.3.006	3-79	19	3
08.6132.4.010	3-39	06	2
08.6132.4.010	3-43	17	3
08.6200.3.005			
08.6200.3.005	3-29	52	2
08.6200.4.006	3-27	46	1
08.6200.4.006	3-61	09	2
08.6200.4.006	3-63	42	(2)
08.6200.4.006	3-71	12	2
08.6202.4.006	3-83	07	1
08.6202.4.008	3-81	22	2
08.6202.4.010	3-9	36	2
08.6202.8.016	3-51	07	4
08.6310.3.016			
08.6310.3.016	3-29	54	2
08.6310.4.006	3-37	17	1
08.6310.5.012	3-11	27	2
08.6310.6.012	3-11	36	1
08.6310.6.035	3-23	32	(1)
08.6400.3.004			
08.6400.3.004	3-37	31	(4)+(4)
08.6400.3.005	3-7	13	(2)
08.6400.3.010	3-27	22	1
08.6400.4.004	3-5	08	(1)
08.6400.4.004	3-5	17	3
08.6400.4.004	3-9	31	1
08.6400.4.004	3-35	05	1
08.6400.4.004	3-69	26	2
08.6400.4.005	3-37	39	(1)
08.6400.4.006	3-3	03	2
08.6400.4.006	3-5	03	(1)
08.6400.4.010	3-17	39	1
08.6400.4.010	3-35	42*	1
08.6400.5.005			
08.6400.5.005	3-9	25	1
08.6400.5.005	3-13	61	(2)+(3)
08.6400.5.005	3-41	12	1
08.6400.5.008	3-5	24	2
08.6400.5.008	3-27	05	1
08.6400.5.008	3-37	06	1
08.6400.5.008	3-37	40	(1)
08.6400.5.010	3-9	48	(1)
08.6400.5.305	3-37	43	(1)
08.6400.6.006			
08.6400.6.006	3-9	49	(1)
08.6400.6.006	3-21	06	6
08.6400.6.006	3-23	08	2
08.6400.6.006	3-37	08	1
08.6400.6.006	3-37	42	(1)+(1)
08.6400.6.010	3-43	12	2
08.6400.6.030	3-37	16	1
08.6400.8.416	3-13	57	(1)
08.6402.3.010	3-57	25	((1)+(1))
08.6402.6.006	3-57	28	((1)+(1))
08.6402.6.006	3-79	17	1
08.6412.3.010	3-63	22	((1)+(1))
08.6412.3.012	3-73	16	((1)+(1))
08.6412.6.005	3-63	21	((1)+(1))
08.6412.6.005	3-73	18	((1)+(1))
08.6420.4.025	3-37	23	1
08.6420.4.030	3-11	29	1
08.6562.0.070			
08.6562.0.070	3-51	04	4
08.6562.0.090	3-51	12	4
08.6662.3.006	3-51	21	(1)
08.6663.5.025	3-51	23	(2)
08.6683.4.007	3-47	03	2
08.6700.3.000			
08.6700.3.000	3-45	18	2
08.6700.3.000	3-59	16	1
08.6700.3.000	3-61	10	1
08.6700.3.000	3-71	09	1
08.6700.4.000	3-11	30	1
08.6700.4.000	3-35	36	(1)
08.6700.4.000	3-37	25	1
08.6700.5.000	3-15	30	2
08.6700.5.000	3-45	15	7
08.6700.5.000	3-45	15*	1
08.6700.5.000	3-61	14	1
08.6700.5.000	3-71	14	1

e-mail: service@amfreece.cz; parts@amfreece.cz; website: www.amfreece.com
Phone: +420 582 309 286; Fax: +420 582 360 606

INDEX

PART NUMBER	PAGE	DET	QTY
08.6700.6.000	3-11	38	1
08.6700.6.000	3-23	33	(1)
08.6700.6.300	3-23	29	(1)
08.6700.8.000	3-13	60	(1)
08.6702.0.000	3-51	06	8
08.6702.2.000	3-75	53	((4))
08.6702.3.000	3-15	37	1
08.6702.3.000	3-81	25	2
08.6702.4.000	3-15	28	1
08.6702.4.000	3-79	18	2
08.6702.7.000	3-81	26	2
08.6710.3.000			
08.6710.3.000	3-27	23	3
08.6710.3.000	3-31	10	1
08.6710.6.000	3-81	13	2
08.6710.9.500	3-43	15	1
08.6712.3.000	3-31	47*	(1)
08.6712.3.000	3-57	26	((1)+(1))
08.6712.3.000	3-63	23	((1)+(1))
08.6712.3.000	3-73	17	((1)+(1))
08.6712.4.000	3-73	44	((2))
08.6722.3.000	3-15	26	1
08.6722.6.000	3-23	34	(1)
08.6733.3.000	3-31	36**	1
08.6733.3.000	3-33	51**	(2)
08.6742.8.000	3-51	03	4
08.6800.3.000			
08.6800.3.000	3-15	29	2
08.6800.3.000	3-43	26	2
08.6800.3.000	3-69	30	1
08.6800.5.000	3-21	03	4
08.6800.5.000	3-23	05	4
08.6800.5.000	3-41	17	2
08.6800.6.000	3-11	39	1
08.6802.0.000			
08.6802.0.000	3-51	15	8
08.6802.3.000	3-15	31	1
08.6802.3.000	3-31	40**	(2)
08.6802.3.000	3-81	14	3
08.6802.4.000	3-5	06	(2)
08.6802.4.000	3-33	52**	(1)
08.6802.4.000	3-81	41	2
08.6802.5.000	3-11	03	1
08.6802.5.000	3-31	45	(2)
08.6802.6.000	3-11	33	1
08.6802.8.300	3-11	16	1
08.6832.3.000	3-45	17	2
08.6832.3.000	3-63	24	((1)+(1))
08.6832.3.000	3-73	14	((1)+(1))
08.6832.4.000	3-45	19	2
08.6832.5.000	3-45	14	11
08.6832.5.000	3-45	14*	1
08.6850.3.000			
08.6850.3.000	3-21	18	1
08.6850.3.000	3-41	15	3
08.6850.3.000	3-43	25	2
08.6850.3.000	3-61	16	1
08.6850.3.000	3-69	31	1
08.6850.4.000	3-9	33	1
08.6850.4.000	3-17	21	15
08.6850.4.000	3-21	14	4
08.6850.4.000	3-27	47	1
08.6850.4.000	3-37	24	1
08.6850.4.000	3-43	30	2
08.6850.4.000	3-61	12	2
08.6850.4.000	3-71	11	2
08.6850.5.000	3-9	34	1
08.6850.5.000	3-9	50	(1)
08.6850.5.000	3-11	02	3
08.6850.5.000	3-21	02	4
08.6850.5.000	3-23	04	4
08.6850.5.000	3-23	31	(2)
08.6850.5.000	3-25	09	8
08.6850.5.000	3-35	21	3
08.6850.5.000	3-37	26	1
08.6850.5.000	3-41	19	2
08.6850.5.000	3-61	17	3
08.6850.6.000	3-21	21	2
08.6850.6.000	3-37	21	3
08.6850.6.000	3-63	44	(1)
08.6850.6.000	3-81	12	1
08.6850.8.000	3-9	22	4
08.6852.0.000			
08.6852.0.000	3-51	05	4
08.6852.0.000	3-51	14	4
08.6852.3.000	3-7	38	(2)
08.6852.3.000	3-15	27	1
08.6852.3.000	3-23	19	2
08.6852.3.000	3-27	39	1
08.6852.3.000	3-31	35**	1
08.6852.3.000	3-33	50**	(2)
08.6852.3.000	3-81	24	1
08.6852.4.000	3-81	21	2
08.6852.4.000	3-83	06	1
08.6852.5.000	3-31	43	(2)
08.6852.8.000	3-51	26	4
08.6887.0.500	3-11	21	1
08.6887.0.501	3-29	65	1
08.6887.5.000	3-29	60	1
10.1021.2.000			
10.1021.2.000	3-7	12	(2)
10.4012.2.019	3-77	10	1
12.0008.3.023			
12.0008.3.023	3-17	43	1
12.0008.3.023	3-35	32	1
12.0008.3.409	3-35	26	(2)
12.0008.3.409	3-61	20	3
12.0008.3.411	3-15	16	1
12.0008.3.411	3-17	30	2
12.0008.3.411	3-61	19	2
12.0008.3.411	3-71	05	2
12.0008.3.413	3-15	13	1
12.0008.3.416	3-15	14	1
12.0008.3.416	3-15	15	1
12.0008.3.416	3-15	17	1
12.0008.3.416	3-17	48	1
12.0008.3.416	3-17	49	1
12.0008.3.416	3-17	50	1
12.0008.3.416	3-19	51	1
12.0008.3.416	3-19	54	1
12.0008.3.416	3-31	20	1
12.0008.3.416	3-31	29	1
12.0008.3.416	3-31	30**	1
12.0008.3.416	3-31	32**	1
12.0008.3.416	3-61	21	1
12.0008.3.416	3-61	22	1
12.0008.3.416	3-61	23	1
12.0008.3.416	3-61	24	1
12.0008.3.416	3-61	25	1
12.0008.3.416	3-71	06	1
12.0008.3.416	3-71	07	1
12.0008.3.418	3-45	12	1
12.0008.3.426			
12.0008.3.426	3-17	29	1
12.0008.3.426	3-47	13	1
12.0008.3.427	3-45	11	2
12.0008.3.431	3-35	07	1
12.0008.3.431	3-35	08	1
12.0008.3.431	3-35	13	1
12.0008.3.431	3-35	14	1
12.0008.3.431	3-35	31	1
12.0008.3.431	3-45	30	1

INDEX

PART NUMBER	PAGE	DET	QTY	PART NUMBER	PAGE	DET	QTY	PART NUMBER	PAGE	DET	QTY
12.0008.3.431	3-45	31	1	12.0008.3.842	3-45	03	1	**12.0008.6.001**			
12.0008.3.431	3-45	32*	1	12.0008.3.843	3-45	04	1	12.0008.6.001	3-53	02	1
12.0008.3.431	3-47	12	1m	12.0008.3.844	3-41	10	1	12.0008.6.005	3-53	01	1
12.0008.3.444	3-31	19	1	12.0008.3.845	3-53	04	1	12.0008.6.215	3-53	03	1
12.0008.3.445	3-45	33	1	12.0008.3.846	3-45	21	1	12.0008.6.230	3-43	14	1
				12.0008.3.849	3-45	22*	1	12.0008.6.812	3-43	10	1
12.0008.3.563								12.0008.6.901	3-51	08	1
12.0008.3.563	3-59	03	1	**12.0008.3.851**				12.0008.6.968	3-53	08	1
12.0008.3.615	3-45	23*	1	12.0008.3.851	3-31	01	1	12.0008.6.977	3-35	34	1
12.0008.3.630	3-31	26**	1	12.0008.3.852	3-45	02	3	12.0008.6.992	3-3	13	1
12.0008.3.630	3-81	33	1	12.0008.3.852	3-45	02*	1	12.0008.6.998	3-43	05	1
12.0008.3.631	3-81	31	1	12.0008.3.853	3-45	05	1				
12.0008.3.661	3-47	02	1	12.0008.3.854	3-45	09	1	**12.0010.3.001**			
				12.0008.3.855	3-45	25*	1	12.0010.3.001	3-31	48	(1)
12.0008.3.734				12.0008.3.856	3-47	08	2	12.0010.4.005	3-39	15	1
12.0008.3.734	3-17	36	2	12.0008.3.857	3-47	09	2	12.0010.4.025	3-21	20	1
12.0008.3.736	3-19	52	1	12.0008.3.858	3-47	10	1	12.0010.4.025	3-23	17	1
12.0008.3.736	3-31	31**	1	12.0008.3.859	3-45	27*	1	12.0010.4.025	3-31	11	1
12.0008.3.736	3-61	27	2	12.0008.3.860	3-33	53	(1)	12.0010.4.067	3-49	19	1
12.0008.3.739	3-19	60	2	12.0008.3.866	3-81	32	1	12.0010.4.071	3-49	08	1
12.0008.3.741	3-45	08	5	12.0008.3.874	3-35	27	(1)	12.0010.4.078	3-49	11	1
12.0008.3.741	3-45	08*	2	12.0008.3.880	3-61	28	1	12.0010.4.093	3-9	37	1
12.0008.3.745	3-35	11	1	12.0008.3.880	3-71	15	1	12.0010.4.093	3-37	13	1
12.0008.3.746	3-15	18	2	12.0008.3.894	3-15	19	1	12.0010.4.093	3-69	14	2
12.0008.3.746	3-31	28**	1	12.0008.3.895	3-45	07	1	12.0010.4.094	3-3	17	5
12.0008.3.747	3-35	12	1	12.0008.3.897	3-45	29*	1	12.0010.4.134	3-49	15*	1
12.0008.3.749	3-81	35	1	12.0008.3.899	3-61	26	1	12.0010.4.146	3-51	17	(1)
12.0008.3.749	3-81	36	1					12.0010.4.161	3-49	14**	1
12.0008.3.749	3-81	37	1	**12.0008.4.050**				12.0010.4.161	3-49	16	3
12.0008.3.749	3-81	38	1	12.0008.4.050	3-49	05	1	12.0010.4.162	3-49	12	1
12.0008.3.749	3-81	39	1	12.0008.4.052	3-39	21	1	12.0010.4.168	3-49	10	1
12.0008.3.754	3-35	30	1	12.0008.4.100	3-23	18	2	12.0010.4.174	3-83	02	2
12.0008.3.754	3-45	26*	1	12.0008.4.214	3-3	27	(1)	12.0010.4.184	3-3	19	1
12.0008.3.784	3-81	34	2	12.0008.4.214	3-81	29	1	12.0010.4.191	3-3	30	(1)
12.0008.3.785	3-45	24*	1	12.0008.4.222	3-39	20	1	12.0010.4.200	3-49	22	1
12.0008.3.792	3-45	06	1	12.0008.4.277	3-83	05	1				
				12.0008.4.280	3-19	53	2	**12.0010.6.901**			
12.0008.3.806				12.0008.4.290	3-83	09	3	12.0010.6.901	3-39	19	1
12.0008.3.806	3-13	59	(1)	12.0008.4.571	3-3	18	1	12.0010.6.902	3-3	10	3
12.0008.3.815	3-81	43	2	12.0008.4.612	3-49	01	1	12.0010.6.903	3-3	11	1
12.0008.3.816	3-35	39	(1)	12.0008.4.615	3-49	02	1	12.0010.6.904	3-3	12	1
12.0008.3.819	3-45	10	3	12.0008.4.664	3-49	04	4	12.0010.6.905	3-3	23	1
12.0008.3.820	3-35	04	2	12.0008.4.665	3-49	03	2	12.0010.6.906	3-43	16	2
12.0008.3.826	3-81	30	1	12.0008.4.682	3-49	18*	1	12.0010.6.907	3-3	39	1
12.0008.3.828	3-47	07	3	12.0008.4.761	3-49	07	2				
12.0008.3.829	3-47	06	1	12.0008.4.770	3-49	13	2	**12.1010.0.030**			
12.0008.3.830	3-47	05	1	12.0008.4.777	3-39	16	4	12.1010.0.030	3-5	16	4
12.0008.3.831	3-47	04	1	12.0008.4.833	3-49	09	1	12.1010.0.206	3-15	20	1
12.0008.3.840	3-17	15	2	12.0008.4.850	3-49	17*	1	12.1010.0.430	3-17	34	2
12.0008.3.841	3-17	38	2	12.0008.4.862	3-3	24	1	12.1010.0.830	3-39	14	2

INDEX

PART NUMBER	PAGE	DET	QTY
12.1010.2.003	3-15	12	1
12.1010.2.027	3-37	30	(2)+(2)
12.1016.0.000	3-3	16	2
12.1016.0.000	3-43	21	2
12.1040.1.002	3-11	09	2
12.1040.1.002	3-25	15	3
12.1040.1.011	3-7	32	(2)
12.1040.1.012	3-29	66	1
12.1045.0.004	3-63	26	((2)+(2))
12.1045.0.004	3-73	10	((2)+(2))
12.1045.0.005	3-57	14	((2)+(2))
12.1045.0.005	3-79	14	2
12.1045.0.009	3-7	34	(1)
12.1045.0.009	3-25	16	1
12.1050.0.001			
12.1050.0.001	3-9	15	1
12.1050.0.001	3-37	07	2
12.2010.0.011	3-11	10	2
12.2010.0.011	3-25	14	2
12.2010.0.024	3-7	14	(2)
12.2010.0.032	3-29	64	2
12.2010.1.004	3-7	31	(1)
12.2050.0.007	3-23	24	(2)
12.2050.0.010	3-9	44	(1)
12.2050.1.005	3-63	41	(1)
12.2050.1.013	3-9	46	(1)
12.2070.0.004	3-21	07	4
12.2070.0.020	3-81	28	4
12.3011.0.010			
12.3011.0.010	3-17	28	1
12.3011.0.011	3-27	26	1
12.3015.7.016	3-13	52	(1)
12.3015.7.016	3-29	63	1
12.3015.7.016	3-69	15	5
12.4010.0.004	3-51	10	8
12.4030.0.514	3-9	20	1
12.4030.0.514	3-37	10	1
12.5050.2.019			
12.5050.2.019	3-25	18	1
12.5050.2.021	3-25	17	1
12.5050.2.026	3-11	26	1
12.5050.2.027	3-9	28	1
12.5050.2.028	3-37	18	1
12.8000.0.436			
12.8000.0.436	3-3	32	(1)
12.8000.0.437	3-3	41	2
12.8000.0.437	3-5	02	(2)
12.8000.0.437	3-39	17	2
12.8000.0.438	3-43	24	1
12.8000.1.032	3-3	15	1
12.8000.1.037	3-43	22	1
12.9900.9.000	3-51	25	1
14.1025.3.000			
14.1025.3.000	3-7	07	(2)
14.1032.3.000	3-7	19	(1)
15.1001.1.700			
15.1001.1.700	3-3	01	1
15.1101.0.300	3-9	07	1
15.1102.0.600	3-9	08	1
15.1103.0.800	3-41	01	1
15.1104.0.991	3-41	02	1
15.1108.0.400	3-9	16	1
15.1110.0.050	3-9	30	1
15.1114.0.400	3-7	21	(1)
15.1115.0.600	3-7	22	(1)
15.1116.0.400	3-7	20	(2)
15.1117.0.100	3-9	09	2
15.1117.0.100	3-29	69	1
15.1123.0.800			
15.1123.0.800	3-9	18	1
15.1124.0.050	3-41	03	1
15.1125.0.050	3-41	04	1
15.1128.0.050	3-9	29	1
15.1128.0.050	3-11	25	1
15.1128.0.050	3-37	14	1
15.1130.0.400			
15.1130.0.400	3-41	05	2
15.1131.0.991	3-41	06	1
15.1134.0.991	3-9	32	1
15.1136.0.800	3-41	07	1
15.1137.0.100	3-7	26	((2))
15.1138.0.800	3-9	10	1
15.1139.0.500	3-9	17	1
15.1140.0.500			
15.1140.0.500	3-9	24	1
15.1142.0.400	3-9	14	1
15.1143.1.400	3-9	38	1
15.1144.0.000	3-9	21	1
15.1145.0.800	3-9	35	1
15.1146.0.400	3-9	27	1
15.1146.0.400	3-37	44	1
15.1201.0.050			
15.1201.0.050	3-9	06	1
15.1201.0.600	3-9	47	(1)
15.1205.0.400	3-9	11	1
15.1207.0.800	3-9	40	(4)
15.1209.0.600	3-9	43	(1)
15.1211.0.800	3-9	41	(2)
15.1302.0.800			
15.1302.0.800	3-15	01	1
15.1303.0.800	3-15	02	1
15.1305.1.800	3-15	33	1
15.1306.0.300	3-15	04	1
15.1307.0.800	3-31	15	1
15.1313.0.100	3-15	05	1
15.1314.1.800	3-15	06	1
15.1316.0.800	3-15	07	1
15.1317.0.300	3-15	23	1
15.1320.0.050	3-15	24	1
15.1401.0.050			
15.1401.0.050	3-3	02	1
15.1401.0.700	3-3	33	(1)
15.1402.1.700	3-15	21	1
15.1403.0.800	3-3	07	1
15.1404.0.800	3-3	09	1
15.1405.0.050	3-3	22	1
15.1405.0.800	3-3	31	(1)
15.1406.0.800	3-3	26	(1)
15.1407.0.800	3-3	04	1
15.1408.0.800	3-3	05	1
15.1409.0.000	3-7	37	(1)
15.1410.0.992	3-3	37	(1)
15.1414.0.992	3-3	21	1
15.1416.0.000	3-3	34	(1)
15.1418.0.200	3-15	34	1
15.1420.0.100	3-3	08	10
15.1420.0.100	3-9	03	9
15.1420.0.100	3-15	35	2
15.1420.0.100	3-19	55	12
15.1420.0.100	3-31	24	2
15.1420.0.100	3-39	03	7
15.1421.0.100	3-3	14	6
15.1422.0.100	3-3	20	4
15.1422.0.100	3-3	36	(2)
15.1422.0.100	3-7	16	(1)
15.1422.0.100	3-7	18	(2)
15.1422.0.100	3-7	39	(2)
15.1422.0.100	3-15	22	2
15.1422.0.100	3-41	13	15

INDEX

PART NUMBER	PAGE	DET	QTY	PART NUMBER	PAGE	DET	QTY	PART NUMBER	PAGE	DET	QTY
15.1422.0.100	3-81	15	1	15.2016.1.800	3-17	40	1	15.2611.0.600	3-63	35	(1)
15.1423.0.100	3-3	35	(2)	15.2017.1.800	3-19	56	1	15.2617.0.800	3-61	01	1
15.1424.0.100	3-3	28	(4)	15.2018.1.800	3-19	57	1	15.2617.0.800	3-71	01	1
				15.2019.0.600	3-17	05	2	15.2618.0.800	3-61	02	1
15.1425.0.000				15.2020.0.992	3-17	42	1	15.2618.0.800	3-71	02	1
15.1425.0.00	3-7	36	(3)	15.2021.0.991	3-17	44	4	15.2619.0.300	3-15	03	1
15.1425.0.100	3-15	36	1	15.2022.0.100	3-17	12	4	15.2619.0.300	3-61	03	1
15.1425.0.100	3-31	13	6	15.2023.0.300	3-57	16	((1)+(1))	15.2619.0.300	3-71	03	1
15.1425.0.100	3-81	16	1	15.2023.0.300	3-63	16	((1)+(1))	15.2620.0.800	3-61	04	1
15.1426.0.100	3-51	20	(3)	15.2023.0.300	3-73	21	((1)+(1))	15.2620.0.800	3-71	04	1
15.1427.0.100	3-17	41	3	15.2023.0.300	3-79	03	2	15.2623.0.800	3-63	30*	(1)
15.1427.0.100	3-75	59	((2))	15.2024.0.800	3-19	58	1	15.2624.0.800	3-61	05	1
15.1428.0.100	3-17	37	2	15.2026.0.600	3-19	59	2				
15.1429.0.100	3-47	11	2					**15.2700.0.051**			
15.1430.0.100	3-57	21	((2))	**15.2500.0.050**				15.2700.0.051	3-65	02	1
15.1431.0.100	3-57	29	((3)+(3))	15.2500.0.050	3-55	01	1	15.2700.0.051	3-67	01	1
15.1431.0.100	3-63	20	((2)+(2)	15.2500.0.050	3-57	01	1	15.2700.1.050	3-65	01	1
15.1431.0.100	3-73	06	((2)+(7))	15.2501.0.050	3-57	02	(1)	15.2700.1.050	3-73	01	1
15.1432.0.100	3-75	51	((5))	15.2501.0.800	3-57	04	((1))	15.2700.1.052	3-67	17	1
15.1433.0.100	3-73	47	((4))	15.2501.0.800	3-63	04	((1))	15.2701.0.050	3-73	02	(1)
15.1434.0.100	3-73	50	((2))	15.2502.0.050	3-57	03	(1)	15.2701.0.800	3-73	04	((1))
15.1434.0.100	3-75	56	((2))	15.2502.0.800	3-57	05	((1))	15.2702.1.050	3-73	03	(1)
				15.2503.0.300	3-57	13	(1)+(1))	15.2702.1.800	3-73	22	((1))
15.1501.0.800				15.2503.0.300	3-63	07	(1)+(1))	15.2703.1.800	3-73	31	((1))
15.1501.0.800	3-81	01	1	15.2503.0.300	3-73	07	(1)+(1))	15.2706.1.800	3-73	34	((1))
15.1502.0.600	3-81	02	1	15.2503.0.300	3-79	04	1	15.2708.1.400	3-73	32	((1))
15.1503.0.300	3-81	03	1	15.2504.0.700	3-57	08	((1)+(1))	15.2711.0.050	3-73	40	((1))
15.1504.0.300	3-81	05	2	15.2504.0.700	3-63	06	((1)+(1))	15.2715.0.100	3-73	35	((1))
15.1505.0.600	3-81	06	1	15.2504.0.700	3-73	08	((1)+(1))	15.2716.0.100	3-73	41	((1))
15.1506.0.600	3-81	08	1	15.2504.0.700	3-79	05	1	15.2717.0.800	3-73	33	((1))
15.1507.0.000	3-81	07	1	15.2505.0.700	3-57	09	((1))	15.2718.0.600	3-73	24	((1))
15.1508.0.050	3-81	09	1	15.2505.0.700	3-63	08	((1))	15.2719.0.600	3-73	23	((1))
15.1510.0.400	3-81	40	1	15.2505.0.700	3-73	11	((1))	15.2720.0.600	3-73	39	((1))
15.1511.0.300	3-81	04	1	15.2506.0.700	3-57	10	((1))	15.2721.0.800	3-73	48	((1))
				15.2506.0.700	3-63	09	((1))	15.2722.0.400	3-73	49	((1))
15.2001.1.600				15.2506.0.700	3-75	60	((1))	15.2723.0.800	3-73	25	((1))
15.2001.1.600	3-17	01	1	15.2507.0.800	3-79	06	2	15.2724.0.800	3-73	26	((1))
15.2002.0.800	3-17	09	2					15.2725.0.800	3-73	27	((1))
15.2003.0.800	3-17	10	2	**15.2600.0.050**				15.2726.0.800	3-73	29	((1))
15.2004.0.300	3-17	13	2	15.2600.0.050	3-59	01	1	15.2728.0.300	3-75	54	((1))
15.2004.0.400	3-9	45	(1)	15.2600.0.051	3-59	02	1				
15.2005.0.800	3-17	17	2	15.2602.0.800	3-63	05	((1))	**15.2812.0.700**			
15.2007.0.600	3-17	20	2	15.2603.0.800	3-63	27	(1)	15.2812.0.700	3-79	07	1
15.2008.0.600	3-17	07	2	15.2604.0.800	3-63	28	(1)	15.2820.0.050	3-77	01	1
15.2009.0.700	3-17	46	2	15.2605.0.600	3-63	29	(1)	15.2821.0.800	3-79	08	1
15.2010.0.300	3-17	03	4	15.2606.0.600	3-63	32	(1)	15.2822.0.800	3-79	09	1
15.2011.0.600	3-17	23	2	15.2607.0.800	3-63	30	(1)				
15.2012.0.600	3-17	24	2	15.2608.0.600	3-63	31	(1)	**15.3001.1.700**			
15.2013.0.600	3-17	45	2	15.2609.0.100	3-63	33	(1)	15.3001.1.700	3-39	01	1
15.2015.0.800	3-17	19	2	15.2610.0.100	3-63	34	(1)	15.3002.0.300	3-21	09	1

INDEX

PART NUMBER	PAGE	DET	QTY	PART NUMBER	PAGE	DET	QTY	PART NUMBER	PAGE	DET	QTY
15.3004.0.600	3-21	10	2	15.3210.0.400	3-31	03	1	15.4410.0.400	3-37	19	1
15.3005.0.000	3-23	16	1	15.3212.1.800	3-31	06	1	15.4412.0.050	3-11	28	1
15.3006.0.600	3-21	13	1	15.3213.0.800	3-31	07	1	15.4412.0.600	3-11	45	(1)
15.3008.0.600	3-35	15	1	15.3214.0.100	3-31	08	1	15.4413.0.300	3-11	43	(1)
				15.3215.0.200	3-31	09	1	15.4415.1.400	3-11	37	1
15.3010.0.300				15.3216.0.000	3-31	18	1	15.4416.0.800	3-11	19	1
15.3010.0.300	3-23	03	2	15.3217.0.100	3-31	46	(1)	15.4417.0.800	3-11	20	1
15.3011.0.300	3-21	12	2	15.3219.0.100	3-31	02	1	15.4418.0.700	3-11	07	1
15.3012.0.050	3-23	15	1	15.3220.0.000	3-33	55*	(1)	15.4419.0.300	3-13	58	(1)
15.3012.0.800	3-23	22	(1)								
15.3013.0.600	3-23	09	1	**15.3801.0.000**				**15.4420.0.600**			
15.3014.0.600	3-23	10	1	15.3801.0.000	3-43	01	1	15.4420.0.600	3-13	56	(1)
15.3015.0.800	3-23	13	1	15.3804.0.800	3-45	01	1	15.4421.0.400	3-11	46	(1)
15.3016.0.050	3-35	01	1	15.3805.0.700	3-43	04	1	15.4423.0.400	3-11	00	(1)
15.3016.0.800	3-35	40	(1)	15.3806.0.300	3-43	07	2	15.4423.0.500	3-11	22	1
15.3017.0.800	3-21	15	1	15.3807.0.300	3-43	02	2	15.4426.0.500	3-9	12	1
15.3018.0.800	3-39	02	2	15.3809.0.400	3-43	03	2	15.4427.0.000	3-13	50	(1)
15.3019.0.300	3-25	01	1	15.3810.0.990	3-43	11	3	15.4427.0.050	3-11	23	1
15.3020.1.500	3-25	20	1	15.3811.0.993	3-43	19	1	15.4428.0.100	3-13	49	(1)
15.3021.0.800	3-25	02	1	15.3812.0.800	3-43	23	1	15.4429.0.300	3-13	48	(1)
15.3022.0.050	3-25	03	1	15.3813.0.600	3-43	28	1	15.4431.0.400	3-11	47	(1)
15.3024.0.800	3-47	01	1					15.4433.0.400	3-11	00	(1)
15.3025.0.300	3-35	38	(1)	**15.4001.0.000**				15.4434.0.400	3-11	00	(1)
15.3026.0.800	3-43	13	1	15.4001.0.000	3-7	09	(1)	15.4435.1.100	3-11	41	(1)
15.3029.0.800	3-21	17	1	15.4001.0.050	3-7	01	1	15.4437.0.990	3-13	54	(1)
				15.4001.0.050	3-9	01	1	15.4439.0.400	3-11	14	1
15.3030.0.300				15.4002.0.500	3-7	02	(1)	15.4440.0.100	3-11	15	1
15.3030.0.300	3-21	08	1	15.4003.0.400	3-7	06	(1)	15.4442.1.400	3-11	35	1
15.3031.0.500	3-21	05	1	15.4004.0.800	3-9	02	1				
15.3032.0.600	3-39	04	1	15.4005.0.400	3-7	30	(1)	**15.4500.0.050**			
15.3033.0.500	3-23	26	(1)	15.4006.0.400	3-7	33	(1)	15.4500.0.050	3-25	06	1
15.3034.0.500	3-23	07	1	15.4007.0.800	3-7	17	(1)	15.4500.1.000	3-27	01	1
15.3035.0.500	3-25	04	2	15.4008.0.400	3-7	35	(1)	15.4501.1.800	3-27	02	1
15.3036.1.500	3-27	35	1	15.4009.0.400	3-7	10	(1)	15.4502.0.400	3-27	03	1
15.3037.0.800	3-39	05	1	15.4010.0.050	3-7	29	1	15.4503.0.991	3-27	04	1
15.3039.0.800	3-41	08	1	15.4010.0.050	3-9	04	1	15.4504.0.700	3-27	06	1
15.3040.0.800	3-39	08	1	15.4011.0.050	3-25	05	2	15.4505.0.600	3-27	40	1
15.3043.0.800	3-39	10	1	15.4017.0.800	3-7	23	(2)	15.4506.0.700	3-27	13	1
				15.4019.0.400	3-7	04	(2)	15.4507.0.400	3-27	15	1
15.3200.1.050				15.4020.0.400	3-7	24	(2)	15.4508.0.400	3-27	42	1
15.3200.1.050	3-31	21	1	15.4021.0.800	3-7	40	(1)	15.4509.0.600	3-27	16	1
15.3200.1.800	3-31	37	(1)	15.4022.0.800	3-7	41	(1)				
15.3201.1.800	3-33	54	(1)					**15.4510.0.600**			
15.3202.0.800	3-31	39**	(1)	**15.4401.0.400**				15.4510.0.600	3-27	17	1
15.3204.0.400	3-31	41	(1)	15.4401.0.400	3-11	11	1	15.4511.0.600	3-29	57	1
15.3205.0.800	3-31	04	2	15.4402.0.600	3-11	12	1	15.4512.0.800	3-27	18	1
15.3205.0.800	3-31	42	(2)	15.4403.0.000	3-11	13	1	15.4514.0.050	3-27	21	2
15.3206.0.300	3-31	22**	1	15.4404.0.300	3-11	08	1	15.4516.0.800	3-55	04	1
15.3207.0.800	3-31	23	1	15.4405.0.050	3-11	31	1	15.4516.0.800	3-65	05	1
15.3210.0.000	3-31	12	1	15.4409.0.400	3-11	01	1	15.4516.0.800	3-67	02	1

e-mail: service@amfreece.cz; parts@amfreece.cz; website: www.amfreece.com
Phone: +420 582 309 286; Fax: +420 582 360 606

INDEX

PART NUMBER	PAGE	DET	QTY	PART NUMBER	PAGE	DET	QTY	PART NUMBER	PAGE	DET	QTY
15.4516.0.800	3-77	05	1	**15.5001.0.600**				**15.7001.0.000**			
15.4519.0.200	3-27	24	1	15.5001.0.600	3-5	20	1	15.7001.0.000	3-35	02	1
				15.5002.0.600	3-5	22	1	15.7001.0.051	3-43	18	1
15.4520.0.300				15.5003.0.600	3-5	21	1	15.7001.0.052	3-39	07	1
15.4520.0.300	3-27	25	1	15.5004.0.600	3-5	19	1	15.7002.0.000	3-35	09	1
15.4521.0.300	3-27	27	1	15.5005.0.300	3-5	18	1	15.8001.0.001	3-49	20	1
15.4521.0.300	3-73	43	((1))	15.5006.0.300	3-5	15	1	15.8001.0.002	3-49	21*	1
15.4522.0.800	3-27	31	1	15.5008.0.300	3-5	09	(1)	15.8001.0.002	3-49	21**	1
15.4523.0.800	3-27	32	1	15.5009.0.050	3-5	01	1				
15.4524.0.800	3-59	04	1	15.5009.0.050	3-5	14	(1)	**17.0004.9.894**			
15.4524.0.800	3-65	09	2	15.5009.0.050	3-5	23	1	17.0004.9.894	3-27	43	1
15.4524.0.800	3-67	10	2	15.5009.0.600	3-5	04	(1)	17.0004.9.895	3-27	44	1
15.4525.0.000	3-27	34	1					17.0011.1.148	3-13	53	(1)
15.4526.0.800	3-27	38	1	**15.5011.0.400**				17.0011.2.072	3-17	32	2
15.4530.0.200	3-27	28	1	15.5011.0.400	3-5	10	(1)	17.0012.0.117	3-27	09	3
15.4531.0.200	3-27	29	1	15.5012.0.600	3-5	11	(1)	17.0012.0.118	3-17	22	2
15.4532.0.800	3-27	45	1	15.5013.0.100	3-5	05	(1)	17.0012.0.118	3-27	20	3
15.4537.0.990	3-27	50	1	15.5014.0.800	3-5	13	(1)	17.0012.0.404	3-27	11	2
15.4539.0.990	3-29	51	1	15.5015.0.050	3-65	18	1	17.0012.0.543	3-7	27	((1))
15.4541.0.800	3-29	56	1	15.5015.0.700	3-35	17	1	17.0012.0.571	3-35	18	1
15.4543.0.600	3-37	38	(2)+(2)	15.5019.0.800	3-35	25	1	17.0012.0.605	3-55	06	1
15.4545.0.400	3-29	61	1	15.5020.0.100	3-5	12	(1)	17.0012.0.605	3-63	38	(1)
15.4546.0.600	3-59	05	1	15.5021.0.300	3-35	06	1	17.0012.0.605	3-65	06	1
15.4548.0.100	3-27	10	1	15.5022.0.600	3-35	41*	1	17.0012.0.605	3-67	07	1
15.4549.0.100	3-27	14	2	15.5023.0.050	3-77	02	1	17.0012.0.605	3-77	06	1
15.4555.0.400	3-27	12	2	15.5023.0.700	3-35	17*	1	17.0012.0.688	3-59	09	1
				15.5024.0.992	3-35	28	1	17.0012.1.142	3-63	37	(1)
15.4601.0.300								17.0012.2.400	3-27	30	1
15.4601.0.300	3-37	02	1	**15.5201.1.990**				17.0012.4.106	3-55	07	1
15.4602.1.400	3-37	03	1	15.5201.1.990	3-69	01	1	17.0012.4.106	3-57	27	((1)+(1))
15.4604.0.500	3-37	09	1	15.5202.1.600	3-69	02	1	17.0012.4.106	3-59	07	1
15.4605.0.050	3-37	04	1	15.5204.0.800	3-69	03	1	17.0012.4.106	3-63	18	((1)+(1))
15.4606.0.050	3-37	05	1	15.5205.1.300	3-69	04	1	17.0012.4.106	3-65	08	1
15.4606.0.600	3-37	27	(1)	15.5206.0.050	3-67	03	1	17.0012.4.106	3-67	09	1
15.4607.0.300	3-37	32	(1)+(1)	15.5206.0.051	3-67	04	1	17.0012.4.106	3-73	20	((1)+(1))
15.4608.0.300	3-37	28	(1)	15.5206.1.600	3-69	05	1	17.0012.4.106	3-77	08	1
15.4608.0.300	3-37	36	(1)	15.5207.1.800	3-69	06	1	17.0012.4.106	3-79	10	2
15.4609.0.300	3-37	35	(1)	15.5211.0.800	3-69	07	1	17.0012.6.110	3-17	16	6
				15.5212.0.800	3-69	08	1				
15.4610.0.400				15.5213.0.800	3-69	09	1	**17.0013.1.259**			
15.4610.0.400	3-37	33	(1)	15.5214.0.600	3-69	10	1	17.0013.1.259	3-59	17	1
15.4611.0.400	3-37	00	0	15.5215.0.800	3-69	11	1	17.0013.1.259	3-65	10	1
15.4612.0.400	3-37	00	0	15.5216.0.500	3-69	12	1	17.0013.1.259	3-67	11	1
15.4613.0.400	3-37	00	0					17.0013.1.415	3-35	23	1
15.4614.0.600	3-37	20	1	**15.6002.0.050**				17.0013.1.415	3-69	16	1
15.4615.0.800	3-37	12	1	15.6002.0.050	3-51	16	1	17.0013.1.482	3-59	10	1
15.4616.0.400	3-37	34	(1)	15.6002.0.800	3-51	24	(1)	17.0013.1.485	3-79	11	1
15.4617.0.400	3-37	00	0	15.6004.0.000	3-49	23	1	17.0013.5.067	3-57	24	((1)+(1))
15.4618.0.400	3-37	00	0	15.6005.0.990	3-51	13	4	17.0013.5.067	3-63	17	((1)+(1))
15.4619.0.400	3-37	00	0					17.0013.5.067	3-73	15	((1)+(1))

INDEX

PART NUMBER	PAGE	DET	QTY
17.0014.1.178	3-59	12	1
17.0016.1.054	3-29	62	1
17.0016.1.190	3-11	06	1
17.0016.1.401	3-59	11	1
17.0019.0.226			
17.0019.0.226	3-29	67	3
17.0019.0.228	3-29	55	2
17.0019.0.228	3-31	17	1
17.0019.0.230	3-11	42	(1)
17.0019.0.602	3-37	37	(2)+(2)
17.0019.0.680	3-63	47	(1)
17.0019.1.088	3-27	41	2
17.0019.2.066	3-57	22	((1)+(1))
17.0019.2.066	3-63	19	((1)+(1))
17.0019.2.066	3-73	13	((1)+(1)
17.0019.5.040	3-57	23	((1)+(1))
17.0021.1.073			
17.0021.1.073	3-35	24	1
17.0026.0.218	3-59	13	1
17.0026.1.084	3-7	05	(2)
17.0026.2.020	3-59	18	1
17.0026.2.020	3-65	11	1
17.0026.2.020	3-67	12	1
17.0026.2.054	3-15	11	1
17.0026.2.072	3-15	32	1
17.0026.2.078	3-31	33	1
17.0026.3.173	3-73	45	((1))
17.0027.1.223	3-53	06	1
17.0027.4.085	3-43	08	4
17.0031.3.027	3-7	03	(2)
17.0033.1.109	3-11	05	1
17.0042.6.083	3-77	03	1
17.0043.6.351	3-7	11	(1)
17.0066.7.420	3-57	12	(1)
17.0066.7.421	3-57	11	(1)
17.0081.5.047			
17.0081.5.047	3-17	26	2
17.0082.5.884	3-57	20	((1))
17.0082.5.884	3-79	12	1
17.0082.5.898	3-29	53	1
17.0082.8.017	3-15	08	2
17.0087.0.169	3-57	19	((1)+(1))
17.0087.0.169	3-79	13	1
17.0087.0.204	3-55	05	1
17.0087.0.204	3-65	07	1
17.0087.0.204	3-67	08	1
17.0087.0.204	3-77	07	1
17.0094.0.029	3-83	04	8
17.0094.0.200	3-51	09	4
17.0095.1.329	3-41	11	2
17.0097.5.174	3-3	25	2
17.0097.5.174	3-39	18	1
17.0097.5.174	3-43	20	1
18.0011.2.400			
18.0011.2.400	3-7	08	(2)
19.0004.1.402			
19.0004.1.402	3-75	58	((1))
19.0005.2.218	3-61	07	3
19.0007.9.462	3-21	01	1
19.0008.3.415	3-35	29	1
19.0011.1.401	3-7	15	(1)
19.0014.3.405	3-35	03	2
19.0014.7.003	3-51	22	(1)
19.0016.1.402	3-17	14	2
19.0016.3.410	3-69	17	1
19.0017.2.403	3-15	09	1
19.0017.2.404	3-15	10	1
19.0019.0.682	3-25	07	2
19.0019.0.682	3-27	36	1
19.0019.0.685	3-23	27	(1)
19.0019.0.686	3-27	48	2
19.0019.6.402	3-63	45	(1)
19.0033.1.406			
19.0033.1.406	3-17	11	2
19.0033.2.403	3-69	18	5
19.0033.5.403	3-23	23	(1)
19.0033.8.407	3-27	07	1
19.0033.8.408	3-27	08	1
19.0041.0.675	3-23	25	(1)
19.0041.1.400	3-63	36	(1)
19.0043.6.441	3-27	49	1
19.0044.1.623	3-37	29	(1)+(2)
19.0063.6.441	3-17	04	2
19.0063.6.445	3-35	22	1
19.0063.6.447	3-69	19	1
19.0064.7.420	3-53	07	1
19.0064.8.409	3-17	08	2
19.0081.4.454			
19.0081.4.454	3-69	20	1
19.0081.5.452	3-73	36	((1))
19.0082.1.405	3-73	28	((1))
19.0082.1.414	3-7	25	(1)
19.0082.3.438	3-73	37	((1))
19.0082.3.439	3-63	46	(1)
19.0082.3.439	3-75	62	((1))
19.0082.6.420	3-59	14	1
19.0082.6.421	3-57	06	((1))
19.0082.6.421	3-63	10	((1))
19.0082.6.421	3-73	19	((1))
19.0082.6.422	3-57	07	((1))
19.0082.6.422	3-63	11	((1))
19.0082.6.422	3-75	63	((1))
19.0082.6.432	3-73	30	((1))
19.0087.0.420	3-59	15	2
19.0087.0.424	3-73	38	((1))
19.0094.2.412	3-41	20	0
19.0094.2.418	3-35	28	1
19.0094.5.412	3-41	21	0
19.0095.1.406	3-61	06	1
19.0095.1.406	3-71	08	1
22.0229.0.000			
22.0229.0.000	3-41	09	8
22.0353.0.000	3-69	21	1
23.2044.0.050			
23.2044.0.050	3-31	14	1
23.2044.0.050	3-31	25	1
24.0084.0.000			
24.0084.0.000	3-51	02	4
24.0168.0.000	3-51	18	(3)
24.0169.0.000	3-51	19	(1)
24.4068.0.005	3-11	17	1

e-mail: service@amfreece.cz; parts@amfreece.cz; website: www.amfreece.com
Phone: +420 582 309 286; Fax: +420 582 360 606