AMF® REECE

Better Ideas, Better Made

MODEL ES-505

ELECTRONIC EYELET BUTTONHOLE MACHINE

PARTS AND SERVICE MANUAL

MACHINE SERIAL No.

PART NUMBER 97. 1500.0.001

This manual is valid from the machine serial No.:
P5050047

AMF is trademark of AMF Group, Inc.

07/2012

AMF® REECE
Better Ideas, Better Made

LIMITED WARRANTY ON NEW AMF REECE EQUIPMENT

Warranty provisions:

A ninety (90) day limited service labor warranty to correct defects in installation, workmanship, or material without charge for labor. This portion of the warranty applies to machines sold as "installed" only.

A one (1) year limited material warranty on major component parts to replace materials with defects. Any new part believed defective must be returned freight prepaid to AMF Reece, Inc. for inspection. If, upon inspection, the part or material is determined to be defective, AMF Reece, Inc. will replace it without charge to the customer for parts or material.

Service labor warranty period shall begin on the completed installation date. Material warranty shall begin on the date the equipment is shipped from AMF Reece, Inc.

Exclusions:

Excluded from both service labor warranty and material warranty are: (1) Consumable parts which would be normally considered replaceable in day-to-day operations. These include parts such as needles, knives, loopers and spreaders. (2) Normal adjustment and routine maintenance. This is the sole responsibility of the customer. (3) Cleaning and lubrication of equipment. (4) Parts found to be altered, broken or damaged due to neglect or improper installation or application. (5) Damage caused by the use of non-Genuine AMF Reece parts. (6) Shipping or delivery charges.

There is no service labor warranty for machines sold as "uninstalled".

Equipment installed without the assistance of a certified technician (either an AMF Reece Employee, a Certified Contractor, or that of an Authorized Distributor) will have the limited material warranty only. Only the defective material will be covered. Any charges associated with the use of an AMF Reece Technician or that of a Distributor to replace the defective part will be the customer's responsibility.

NO OTHER WARRANTY, EXPRESS OR IMPLIED, AS TO DESCRIPTION, QUALITY, MERCHANTABILITY, and FITNESS FOR A PARTICULAR PURPOSE, OR ANY OTHER MATTER IS GIVEN BY SELLER OR SELLER'S AGENT IN CONNECTION HEREWITH. UNDER NO CIRCUMSTANCES SHALL SELLER OR SELLER'S AGENT BE LIABLE FOR LOSS OF PROFITS OR ANY OTHER DIRECT OR INDIRECT COSTS, EXPENSES, LOSSES OR DAMAGES ARISING OUT OF DEFECTS IN OR FAILURE OF THE EQUIPMENT OR ANY PART THEREOF.

WHAT TO DO IF THERE IS A QUESTION REGARDING WARRANTY

If a machine is purchased through an authorized AMF Reece, Inc. distributor, warranty questions should be first directed to that distributor. However, the satisfaction and goodwill of our customers are of primary concern to AMF Reece, Inc. In the event that a warranty matter is not handled to your satisfaction, please contact the appropriate AMF Reece office:

Europe
Prostejov, Czech Republic
Phone: (+420) 582-309-286
Fax: (+420) 582-360-608
e-mail: service@amfreece.cz

AMF® REECE
Better Ideas, Better Made

Warranty Registration Card

(Please Fax or Mail immediately after installation)

Note: All Warranty Claims Void, unless Registration Card on file at AMF Reece HQ

Machine model number:
(S101, S100, S104, S105, S311, Decostitch, S4000 BH, ES-505, etc)

Manufacturer‘s serial or production number:

Installation Site Information:

Customer‘s Name:

Customer‘s Mailing Address:

Customer‘s Telephone Number:

Supervising Mechanic‘s or Technician‘s Name:

Signature of Supervising Technician:

AMF Reece Technician‘s Name:

AMF Reece Technician‘s Signature:

Type of garment produced at this location?

Average Daily Production Expected from this machine?
(number of buttonholes, jackets sewn, pants produced, buttons sewn, etc)

Any special requirements required at this location?

What other AMF Reece Machines are at this location?

How can we serve you better?

Tovární 837, 798 11 Prostìjov, Czech Republic
Fax: +420 582 360 606, e-mail: service@amfreece.cz, website: www.amfreece.com

TABLE OF CONTENTS

A - INTRODUCTION

1. Basic information 1-1
2. Safety instructions 1-2
2.1. Safety symbol and their meanigs 1-2
2.2. General safety instructions 1-3
2.3. Delivery safety instructions 1-4
2.4. Installation and maintenance safety instruction 1-4
2.5. Daily operation safety instructions for operator 1-5
2.6. Safety and instructions labels the machine 1-6
3. Colour marks on the machine 1-8
4. General machine parts description 1-9
4.1. Basic model 1-9
4.2. Ultraflex model 1-10
4.2.1. Models of machines with Ultraflex 1-10
4.2.2. Use of the machine 1-11
5. Technical conditions 1-12
6. Terminology used to describe buttonhole parts 1-14
7. Buttonhole types and cutting options 1-14
7.1. Standard models 1-14
7.2. Ultraflex models 1-15
8. Special accessories 1-16

B - MACHINE INSTALATION

1. Consignment content 1-17
2. Stand adjustment 1-17
3. Placing machine 1-18
4. Thread stand installation 1-18
5. Checking oil tank 1-19
6. Connecting machine with electricity and air distribution 1-20

C - PROPER USAGE

1. Before starting sewing 1-21
1.1. Adjusting needle 1-21
1.2. Threading 1-21
1.3. Threading upper thread 1-22
1.4. Threading bottom thread 1-23
1.5. Gimp draw off 1-24
2. Lubrication 1-25
2.1. Filling up oil 1-25
2.2. Lubricating important parts 1-26
3. Putting machine into home for sewing 1-27
4. Loading fabric 1-28
5. Sewing buttonhole 1-29
6. Broken thread 1-30

D - MACHINE CONTROLS

1. Touch screen 1-31
1.1. Display menu 1-31
1.2. Buttons and icons commonly used 1-34
1.3. Before initial programming 1-35

TABLE OF CONTENTS

2. Programming 1-36
2.1. Buttonhole program options 1-36
2.2. Program name options 1-37
2.3. Setting buttonhole parameters 1-38
2.3.1. Setting eye parameters 1-38
2.3.2. Setting parameters round buttonhole 1-39
2.3.3. Setting parameters of first and secod raw of stitches 1-40
2.3.4. Buttonhole ending setup 1-41
2.3.4.1. Setting buttonhole open end 1-41
2.3.4.2. Setting buttonhole fly bar 1-41
2.3.4.3. Setting buttonhole cross bar 1-42
2.3.4.4. Setting round end of buttonhole with sewing starting in eye 1-42
2.3.4.5. Setting round end of buttonhole with sewing starting in eye 1-43
2.4. Setting buttonhole cutting 1-44
2.5. Setting round buttonhole cutting 1-45
2.6. Ultraflex 1-46
2.6.1. Cutting the whole buttonhole 1-46
2.6.2. Cutting the starting part of the buttonhole 1-47
2.6.3. Cutting the eye or part of buttonhole with the eye 1-47
2.7. Setting up buttonhole sewing speed 1-48
2.8. Setting up round end buttonhole sewing speed (RDE) 1-48
3. Cycle model 1-49
3.1. Selection of program number in standard cycle mode 1-50
3.2. Buttonhole program selection in cycle mode 1-50
3.3. Setting cycle mode with active optical sensor 1-51
4. Aditional functions 1-53
4.1. Productivity (cycle counter) 1-53
4.1.1. Setting dayily cycle counter 1-53
4.2. Error mesages 1-53

E - STANDARD MACHINE ADJUSTMENT

1. Standard buttonhole types set by the manufacturer 1-54
2. Service menu display 1-55
2.1. Service menu display guide 1-55
2.2. Password login 1-57
2.2.1. Password and protecting levels 1-57
2.3. Informative screeen 1-57
2.4. Buttonhole program copying 1-58
2.5. Machine setting 1-59
2.6. Selection of model and machine accessories 1-60
2.6.1. Selection of standard model and machine accessories 1-60
2.6.2. Ultraflex model 1-62
2.6.3. Selection of optical sensor for Ultraflex model 1-63
2.7. Input testing 1-64
2.8. Output testing 1-64
2.9. Motortesting 1-65
3. Repeted fabric cut mode 1-66
4. Setting up PLC according to machine type 1-66
5. Setting up sewing drive sensor rings 1-67
5.1. Setting up sensor screen BQ1 1-67

TABLE OF CONTENTS

5.2. Setting up sensor screen BQ8 1-67
6. Setting bed plate 1-68
7. Setting up turning mechanism 1-69
8. Checking sewing mechanism height 1-70
9. Setting up mechanism clamping fabric 1-71
10. Various spreading of workpiece 1-72
11. Cutting mechanism set up 1-73
11.1. Checking cutting mechanism setup 1-74
11.2. Knife and cutting steel set up - standard 1-76
11.3. Knife and cutting steel set up - Ultraflex 1-77
11.4. Pressure and cutting sensor adjustment 1-78
12. Knife and cutting steel exchange 1-79
12.1. Cutting with fixed cutting steel 1-79
12.2. Modification of cutting steels surface 1-80
12.3. Cutting with sliding steel (Ultraflex) 1-80
13. Standard sewing cam setting 1-81
14. Adjusting the needle and looper timming 1-82
15. Adjusting the looper stroke 1-83
16. Adjusting the height of the needle bar 1-84
17. Adjusting of distance between needle and loopers 1-85
18. Loopers adjustment 1-86
19. Bite mechanism set up 1-87
20. Upper thread trimming mechanism - AF, LTT 1-88
21. Bottom thread and gimp trimming - LTT 1-89
22. LTT knife replacement 1-90
23. Knives adjustment - LTT 1-91
24. Bottom thread holder adjustment - LTT 1-92
24.1. Bottom thread holder opener 1-92
24.2. LTT botom thread guide 1-92
25. Upper thread nipper mechanism 1-93
26. Upper trimming and lower interception - CT 1-94
27. CT knife replacement and adjustment 1-95
27.1. Knife replacement and adjustment 1-95
27.2. Cutting pressure set up 1-95
28. Clamping feet 1-96
28.1. Sheers adjustment 1-96
28.2. Bottom thread trimming and gimp trimming mechanism 1-96
29. Spreaders and thread tensioner adjustment 1-97
29.1. Upper thread 1-97
29.2. Bottom thread 1-98
29.3. Gimp 1-99

F - MACHINE MAINTENANCE

1. Machine cleaning and maintenance 1-100
1.1. Daily cleaning and checking 1-100
1.1.1. Sewing mechanism cleaning 1-100
1.1.2. Filter unit cleaning and maintenance 1-101
1.1.3. Needle check 1-101
1.2. Cleaning and checking as needed 1-102

Released 04/2012
E-mail: service@amfreece.cz; parts@amfreece.cz; website: www.amfreece.com
Phone: +420 582 309 286; Fax: +420 582 360 606

TABLE OF CONTENTS

1.2.1. Control box 1-102
1.2.2. Draining lubrication oil out 1-102
1.2.3. Eye safety cover 1-102
1.2.4. Lubrication 1-102
2. Maintenance list 1-103
3. Machine disposal 1-103

G - DOCUMENTATION

1. Pneumatic diagram 1-104
2. Electrical diagram 1-104

E-mail: service@amfreece.cz; parts@amfreece.cz; website: www.amfreece.com
Phone: +420 582 309 286; Fax: +420 582 360 606

A - INTRODUCTION

1.BASIC INFORMATION

Thank you for buying our electronic buttonhole machine ES 505. Before putting the machine into initial operation, please read carefully this service manual. The first part covers installation, adjustment, operation and service of the machine. The second part is to provide information to help with ordering spare parts for this machine.

ES-505 is electronic apparel buttonhole machine. It is used for sewing all types of buttonholes on different kinds of fabrics and with options of cut before(CB) or cut after (CA) sewing. The machine can sew chain stitch with double or single thread and optionally with gimp.

The machine is equipped with patented mechanisms to lower noise and vibration during high production. Basic sewing parameters are set on the touch display using simple and understandable graphics. The ES 505 machine was designed and produced in such way to be reliable safe and user friendly.

Machine models of ES 505 have different types of trimming mechanism. For the models see the table below.

	Basic types of trimming mechanism		
Trimming mechanism offered with machine types	**AF**	**CT**	**LTT**
	AF	CT 14-26	LTT
	AF + I	CT 22-35	LTT RDE
	AF + RDE	CT 14-26+1	ULTRAFLEX
	ULTRAFLEX	CT + RDE	

Abbreviations used in the manual	
CA	Cutting buttonhole after sewing
CB	Cutting buttonhole before sewing
AF	Automatic top thread trimming
CT	Automatic trimming of all threads - short tail
LTT	Automatic trimming of all threads - long tail
RDE	Round eylet
Ultraflex	Automatic cutting lenght systém of buttonhole
I	Indexer

2. SAFETY INSTRUCTIONS

Do not put the machine into operation until you have read all manuals supplied with the machine and you understood each function and operation!

We recommend AMF Reece servicemen to be present at the machine installation and initial training of your mechanics and operators.

Nejefektivnìjším zajištìním bezpeènosti pracovníkù pøi obsluze stroje je pøísnì stanovený bezpeènostní program, jeho• souèástí jsou pokyny pro bezpeènost obsluhy. Operators and maintenance should use goggles.

2.1. SAFETY SYMBOLS AND THEIR MEANINGS

Electronic safety device protects an operator as well as the machine. It respects valid safety and hygiene standards for regular technological machine usage. This safety device includes the plug fork, operational switch (safety breaker), air pressure switch and covers ensuring safety work on the machine only if they are fitted correctly.

Mentioned measures cannot cover all safety aspects and therefore it is necessary for the operator to read and understand this manual before using the machine. These will eliminate errors during machine installation and machine operation too.

This manual includes four categories of safety instructions:

DANGER!	*Overlooking instructions may endanger operator's life.*
WARNING!	*Overlooking instructions may cause severe injury of the operator or damage the machine.*
CAUTION!	*Overlooking instructions may damage the machine or cause injury of the operator.*
NOTE!	*Breaching procedures may cause functional problems with the machine.*

Released 04/2012
E-mail: service@amfreece.cz; parts@amfreece.cz; website: www.amfreece.com
Phone: +420 582 309 286; Fax: +420 582 360 606

A - INTRODUCTION

2.2. GENERAL SAFETY INSTRUCTIONS

Before plugging the machine into electricity, make sure that all covers are fitted. Do not put the machine into electricity if any of the covers is removed.

Remember where the STOP button is placed, so that you can use it at any time.

Check that electric cables are not damaged. Bare cable could cause an injury. Repair damaged covers or replace them with new ones.

Do not touch rotating and moving parts at any circumstances.

Do not put your fingers into the sewing needle area at any circumstances.

Before changing the needle, switch off the main switch.

Always unplug the machine from the electricity before machine maintenance and cleaning.

If you are not going to work on the machine, disconnect the power supply with the main switch.

Do not modify the machine in any way that could endanger its safety.

Keep in mind, that improper handling or wrong maintenance can make every part of the machine dangerous. It is very important that whoever works with the machine – operate it or do maintenance – is acquainted with information in this brochure and parts catalogue.

Do not miss out doing regular maintenance in accordance with the operational manual.

If the electricity power supply breaks down, switch the machine with the main switch.

Do not remove, damage, modify or paint safety labels, but keep them clean. In case they are not legible or not in place, order a new label and place it onto the original spot.

If you have long hair, make them in such way, that it cannot be caught and trapped by the driving mechanism.

Buttons (hooks) on the sleeves always keep on, to avoid the danger of wrapping loose clothing to the drive mechanism.

Do not work on the machine impaired or intoxicated.

2.3. DELIVERY SAFETY INSTRUCTIONS

When unwrapping the machine, follow the marks and symbols on the box and wrapping.

Visible damages of the consignment caused during shipment must be reported to the freight forwarder immediately. Check the content of the consignment with the order and inform the manufacturer on any discrepancies. Later claims will not be taken into consideration!

2.4. INSTALLATION AND MAINTANACE SAFETY INSTRUCTION

The machine is fitted with a filter to suppress noise according to the standars (EMC - ÈSN 50081-1 and 50081-2). In case there is a circuit breaker connected in the power system, it must be a type for devices with stray current and with high resistance to surge current in the operational conductor (ie. “S” type).

If there is a need to remove any of the safety covers, switch off the main switch, and possibly unplug the machine from the electricity.

It is strictly forbidden to connect any connector while the machine is switched on and under voltage! Electrical parts and motors may get damaged.

Make sure that electricity supply and its dimensioning and protection provide stable electricity supply necessary for reliable machine performance.

Released 04/2012
E-mail: service@amfreece.cz; parts@amfreece.cz; website: www.amfreece.com
Phone: +420 582 309 286; Fax: +420 582 360 606

2.5. DAILY OPERATION SAFETY INSTRUCTIONS FOR OPERATOR

 *Do not connect the machine onto power supply, if any of the safety covers is removed.*

 *Check there are no bare electrical cables that could cause injury.*

 *If you are not sure about proper operational procedure, it is necessary to call a mechanic.*

 *The user has to ensure the lightning of minimum 750 Luxs.*

2.6. SAFETY AND INSTRUCTION LABELS ON THE MACHINE

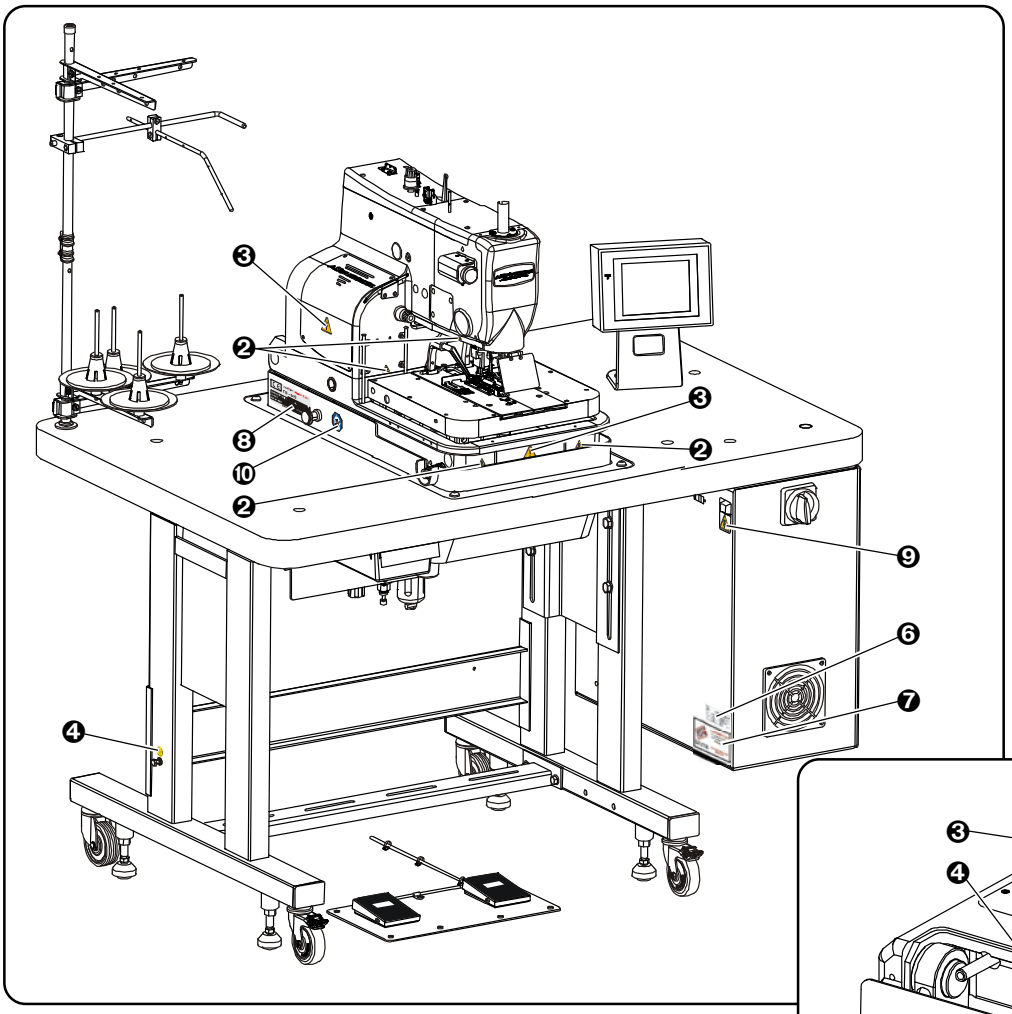

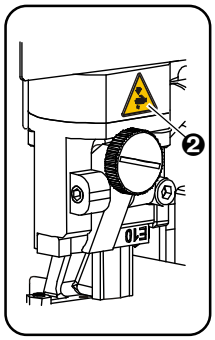

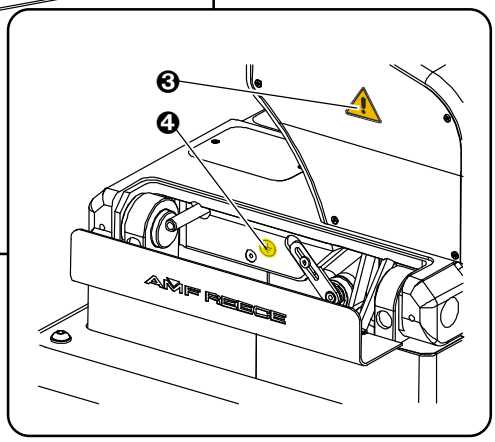

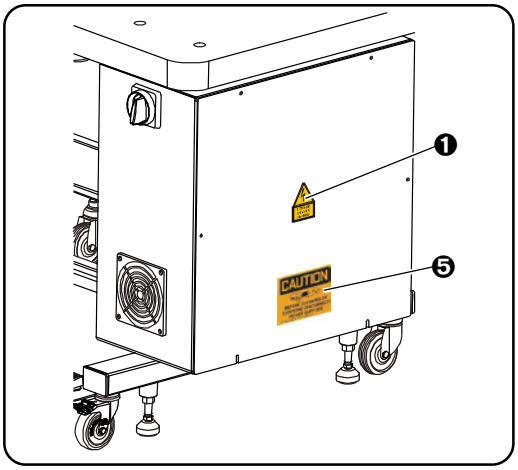

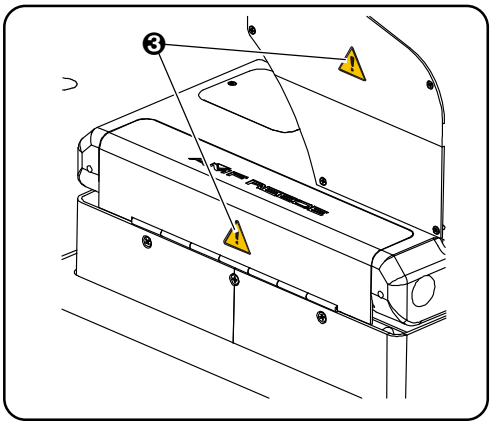

Released 04/2012
E-mail: service@amfreece.cz; parts@amfreece.cz; website: www.amfreece.com
Phone: +420 582 309 286; Fax: +420 582 360 606

A - INTRODUCTION

No.	Label	Description	No.	Label	Description
1		Electricity injury warning	6	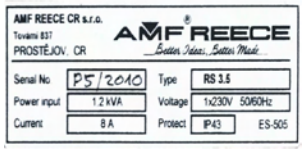	Control box
2		Possibility of injury	7		Manufacturer information label
3		Injury warning	8	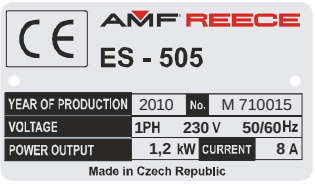	Standard machine label
4		Grounding	9	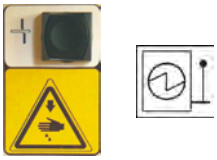	Activation of immediate cutting
5		Warning	10		Monitored production type tested

3. COLOUR MARKS ON THE MACHINE

SCREW CONNECTIONS	**YELLOW MARKS**	Loosening and dismantling this joint is significant hit to the adjustment of the mechanism, which was done at the manufacturer during assembly and final sew off. After such interference into the mechanism, new adjustmet of the mechanism and full inspection of the machine adjustment is necessary.
	BLUE MARKS	Screws and nuts are secured with LOCTITE glue against loosening.
LUBRICATION POINTS	**RED MARKS**	⚠ ***CAUTION!*** In order to keep the machine in operation reliable and long life, follow and keep the lubrication instructions. For details see chapter **C2**.

Released 04/2012
E-mail: service@amfreece.cz; parts@amfreece.cz; website: www.amfreece.com
Phone: +420 582 309 286; Fax: +420 582 360 606

A - INTRODUCTION

4. GENERAL MACHINE PARTS DESCRIPTION
4.1. BASIC MODEL

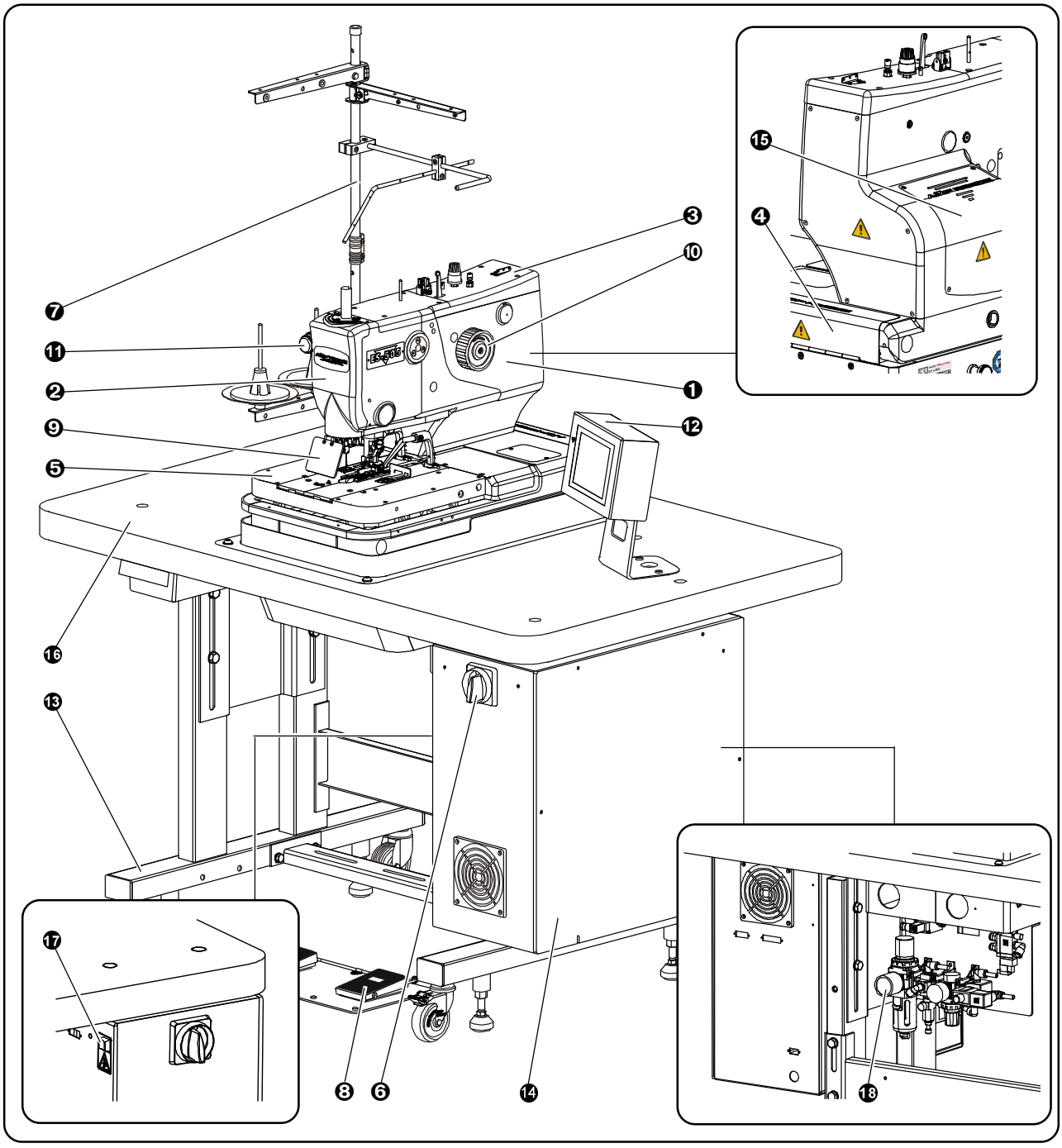

❶ Sewing Head
❷ Front Cover
❸ Upper Cover
❹ Rare Cover
❺ Bed plate
❻ Main Power Switch
❼ Thread Stand
❽ Foot Pedal
❾ Eye Guard
❿ Hand Wheel
⓫ Emergency Stop Button
⓬ Display
⓭ Stand
⓮ Control Box
⓯ Motor
⓰ Table
⓱ Activation ofimediate Button
⓲ Air Pressure Regulator

4.2. ULTRAFLEX MODEL

Elektronic apparel buttonhole machine with sliding cutting steel enables sewing buttonholes withing the range of **14 - 26+1** mm and wits the cut **6 - 30** mm without the change the cutting steel. This device is called ULTRAFLEX (formerly know as ACL).

ULTRAFLEX model is supplied in LTT version - all threads trimming - unless other version specified. AF version - without trimming all threads - is available.

To run the machine in ULTRAFLEX mode, follow the section **D 2.6**.

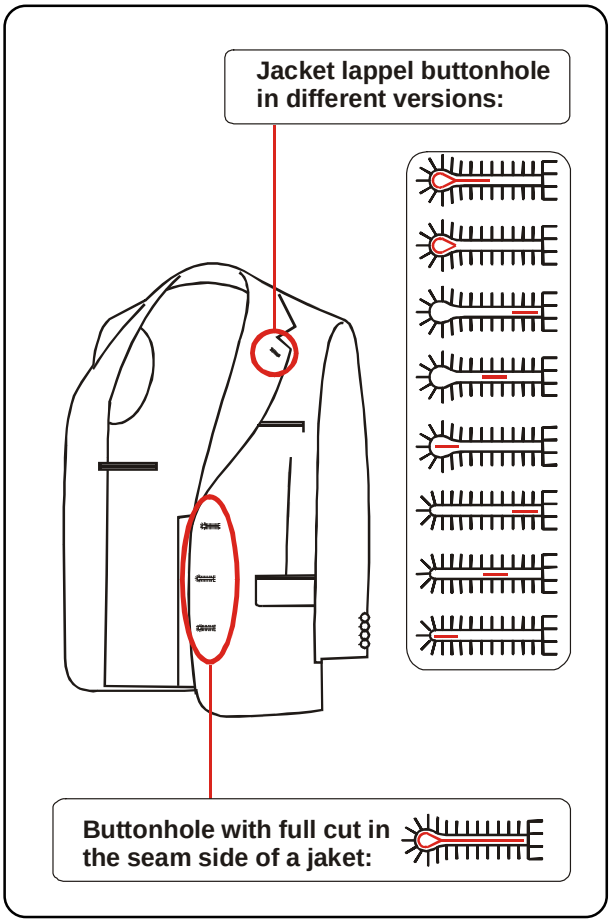

4.2.1. Models of machines with ULTRAFLEX:

a) LTT Ultraflex:
Uses the range of sewing **14 - 26+1** mm. It enables cutting only the buttonhole along its all length, and also cutting only the eye section or partically the straight part of the buttonhole within **8 - 25** mm.
The Ultraflex device can be used to sew jakets.

b) AF Ultraflex:
In preparation.

For automatically sewn buttonholes on jacket front, there is an optical sensor ❶ (seee section **A 8**), with hepls the machine operator work faster. It is difficult to install the sensor and therefore necessary to remember to order it with the machine. **Later assembly at the customer is not possible!!**

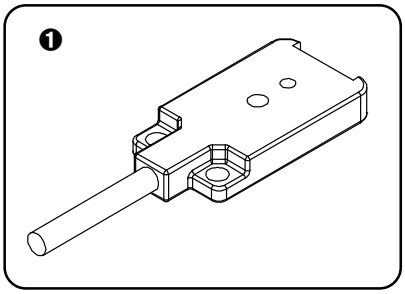

Released 04/2012
E-mail: service@amfreece.cz; parts@amfreece.cz; website: www.amfreece.com
Phone: +420 582 309 286; Fax: +420 582 360 606

A - INTRODUCTION

4.2.2. Use of the machine:

❶ Slidding Block Mechanism
❷ Motor
❸ Sensor

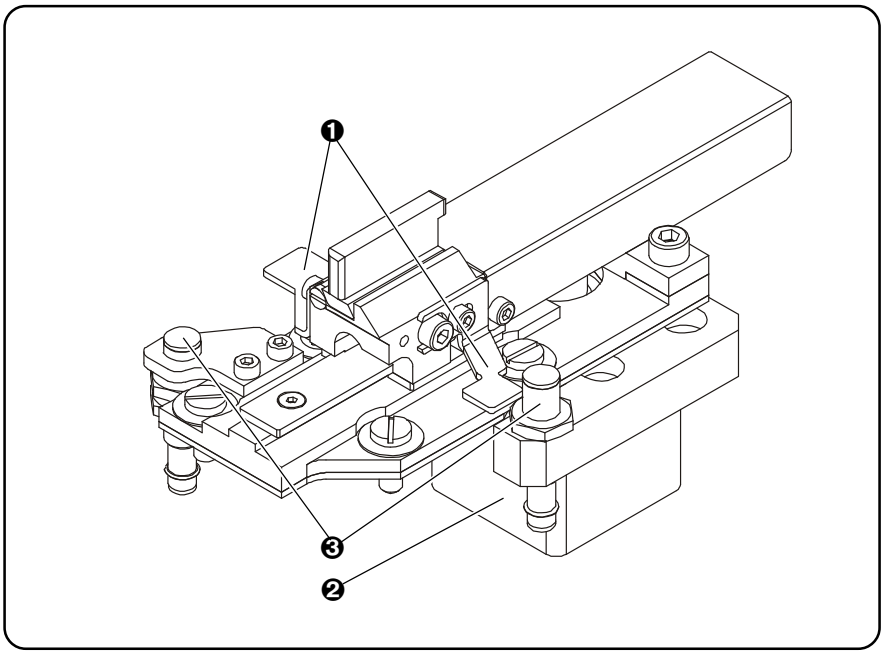

❹ Pressure changing valve
0,5 MPa ⇄ 0,25 MPa
❺ Regulator cutting lapel buttonhole cutting pressure (0,25 MPa)
❻ Manometer

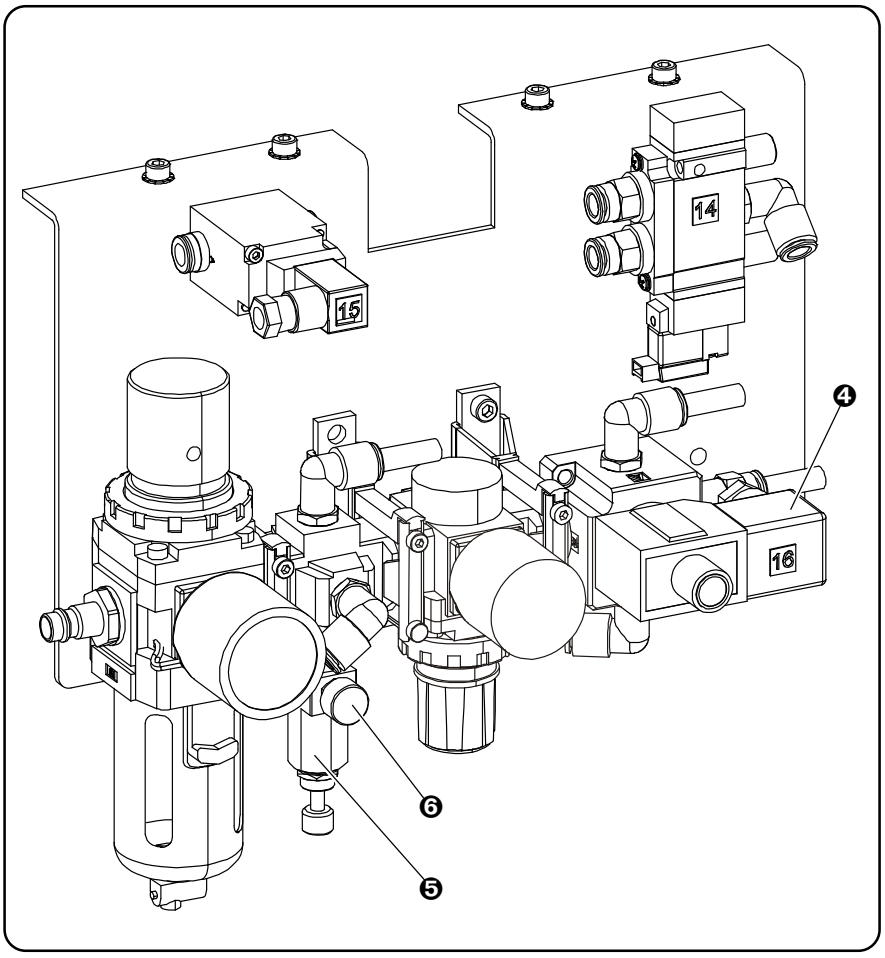

5. TECHNICAL CONDITIONS

Machine type / model	AF	CT 14-26	CT 22-35	LTT	RDE
Machine performance	2700 st/min				
Buttonhole type					
Buttonhole lenght	10 - 50 mm	14 - 26 mm	22 - 35 mm	13 - 38 mm	-
Stitch density	0,5 - 2 mm				
Mechanical stitch bite	1,9 - 2,7 mm				
Electronic stitch bite	± 0,3 mm				
Eye shape	No eye; 2,2 x 3,0 mm; 2,8 x 4,2 mm; 3,0 x 4,6 mm; 3,2 x 5,0 mm; 3,4 x 4,2 mm;				Ø 2 - 7 mm
Fly bar length			3 - 20 mm		
Cross bar length	3 - 8 mm	3 - 6 mm	3 - 6 mm	3 - 8 mm	-
Thickness of sewn piece	max.do 8 mm				
Standard needle	02.0579.1.111.NEEDLE 579 - 100 Nm GEBEDUR				
Recommended needle	02.0579.1.110.NEEDLE 579 - 90 Nm GEBEDUR - for fine thin fabrics 02.0579.1.112.NEEDLE 579 - 110 Nm GEBEDUR - for denim				
Recommended threads	80, 100, 120, gimp 10-30 standard				
Operational conditions	According to IEC 364-3, IEC 364-5-51 temperature from 5℃ to 40℃ humidity between from 30 to 80%				
Air Pressure	0,55 MPa = 80 PSI				
Sewing head dimensions	693 x 375 x 665 mm				
Table dimensions	793 x 1200 x 790 mm				
Machine total weight	230 kg				
Sewing head weight	150 kg				
Electricity supply	1NPE ~ 60Hz 230 V/TN/S; 1NPE ~ 50Hz 230 V/TN/S Min. 10A Characterization C (EN60947-2)				

Released 04/2012
E-mail: service@amfreece.cz; parts@amfreece.cz; website: www.amfreece.com
Phone: +420 582 309 286; Fax: +420 582 360 606

A - INTRODUCTION

Machine type / model	Ultraflex
Machine performance	2700 st/min
Buttonhole type	
Buttonhole length	13 - 30 mm
Cutting length with eye	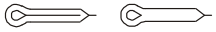 5 - 30 mm (According to size eye)
Starting cut length	 8 - 25 mm
Trimming	LTT / AF
Stitch density	0,5 - 2 mm
Stitch bite	1,9 - 2,7 mm (± 0,3)
Eye shape	No eye; 2,2 x 3,0 mm (To be ordered) 2,8 x 4,2 mm; 3,0 x 4,6 mm (To be ordered) 3,2 x 5,0 mm (To be ordered) 3,4 x 4,2 mm;
Fly bar length	3 - 20 mm
Cross bar lenght	3 - 8 mm
Thickness of sewn piece	max.do 8 mm
Standard needle	02.0579.1.111.NEEDLE 579 - 100 Nm GEBEDUR
Recommended needle	02.0579.1.110.NEEDLE 579 - 90 Nm GEBEDUR - for fine thin fabrics 02.0579.1.112.NEEDLE 579 - 110 Nm GEBEDUR - for denim
Recommended threads	80, 100, 120, gimp 10-30 standard
Oparational conditions	Dle IEC 364-3, IEC 364-5-51 temperatura from 5℃ to 40℃ humidity between from 30 to 80%
Air Pressure	0,55 MPa = 80 PSI
Machine head dimensions	693 x 375 x 665 mm
Table dimensions	793 x 1200 x 790 mm
Machine total weight	230 kg
Sewing head weight	150 kg
Electricity supply	1NPE ~ 60Hz 230 V/TN/S; 1NPE ~ 50Hz 230 V/TN/S Min. 10A Characterization C (EN60947-2)

A - INTRODUCTION

6. TERMINOLOGY USED TO DESCRIBE BUTTONHOLE PARTS

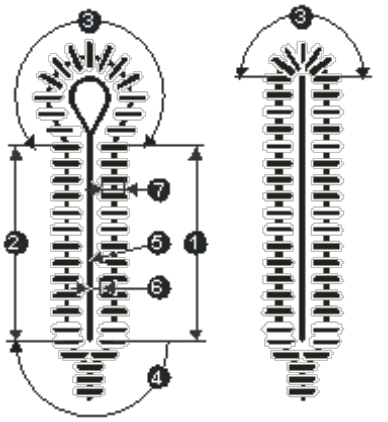

❶ First raw of stitches
❷ Second raw of stitches
❸ Eye area
❹ Buttonhole end
❺ Buttonhole cutting
❻ Cutting / space
❼ Stitch bite

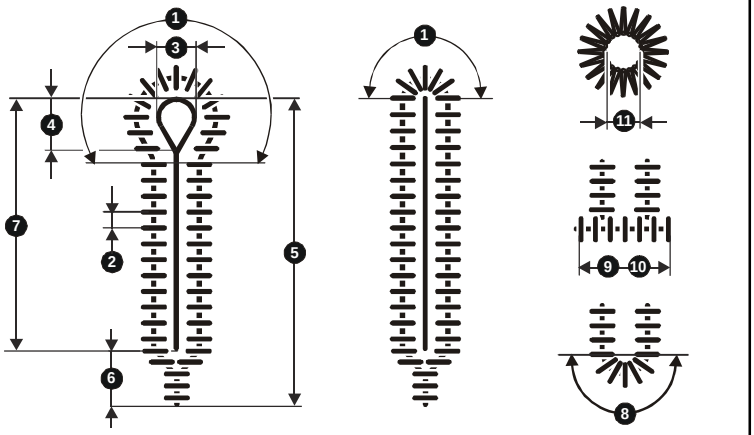

❶ Number of stitches in eye
❷ Stitch density
❸ Eye width
❹ Eye length
❺ Total buttonhole lenght
❻ Fly bar lenght
❼ Cutting lenght
❽ Number of stitches in round end
❾ Number of stitches in cross bar
❿ Cross bar lenght
⓫ Round eylet diameter

7. BUTTONHOLLE TYPES AND CUTTING OPTIONS

7.1. STANDARD MODELS

Buttonhole with eye				Round buttonhole
Open end	Fly bar	Coss bar	Round end	
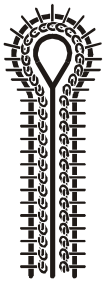		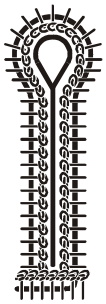	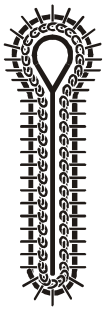	
No eye buttonhole				
Open end	Fly bar	Coss bar	Round end	
				

Released 04/2012
E-mail: service@amfreece.cz; parts@amfreece.cz; website: www.amfreece.com
Phone: +420 582 309 286; Fax: +420 582 360 606

7.2. ULTRAFLEX MODEL

The table shows cutting options for buttonholes (with and without eye) with cross bar. Both cutting options can be used for buttonholes with a different bar type (fly bar, cross bar and round end) or without a bar (open end buttonhole).

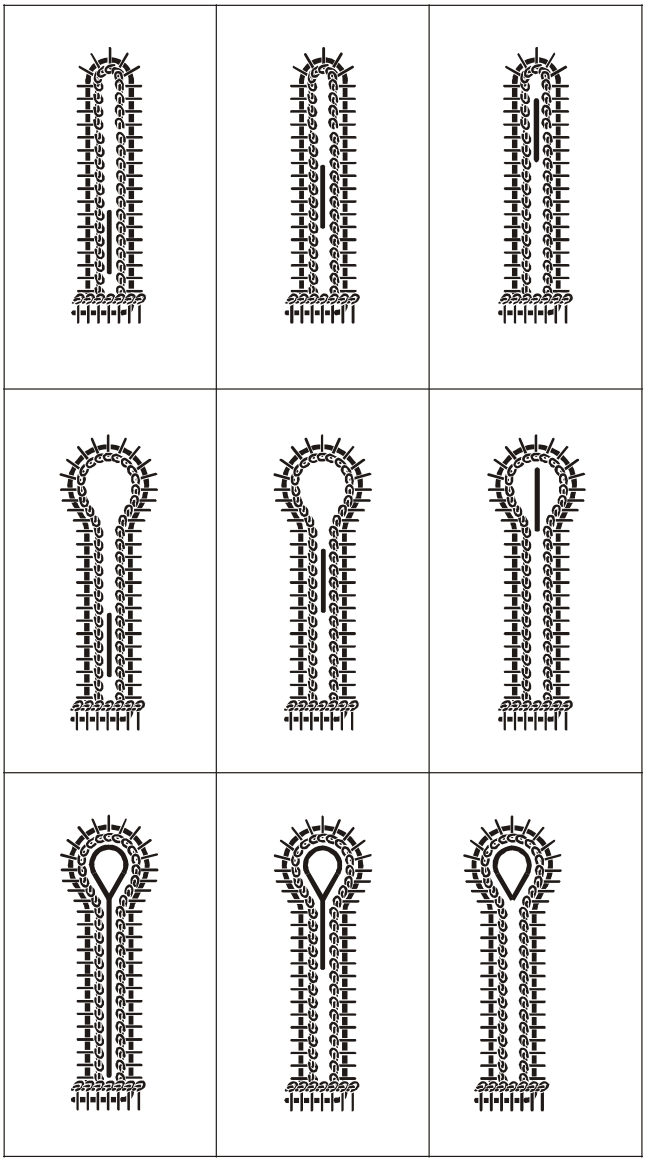

8. SPECIAL ACCESSORIES

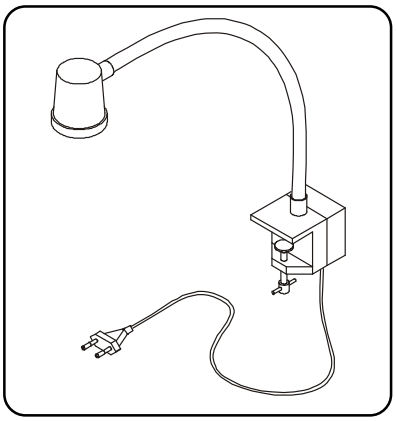

❶ Working light 12.0008.4.875

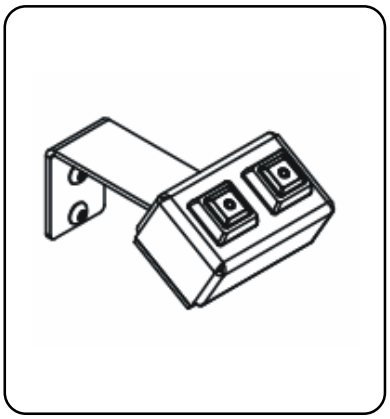

❷ Manual start control 03.5515.0.015

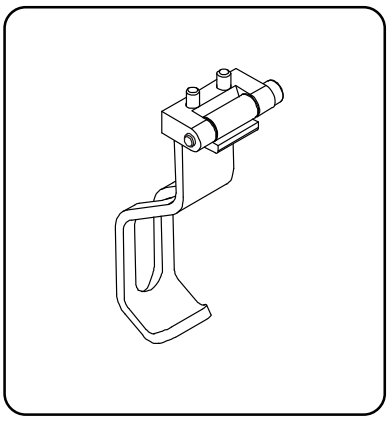

❸ Pocket holder 03.5515.0.036

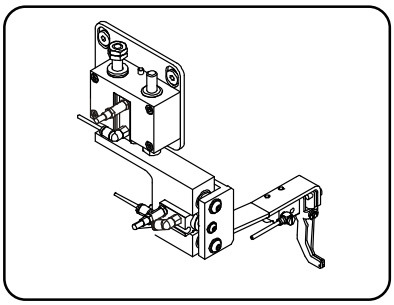

❹ Thread nipper 03.5515.0.019

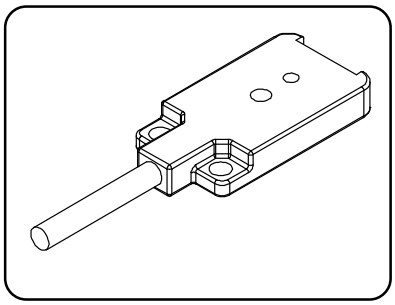

❺ Optical sensor for Ultraflex model/lapel optical 12.0010.4.238.

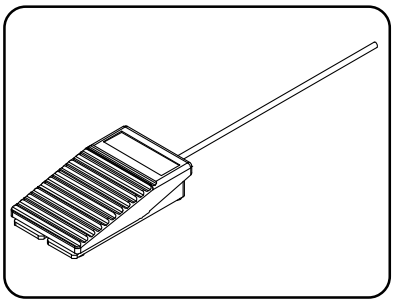

❻ Two-position foot pedal 03.5515.0.018

Released 04/2012
E-mail: service@amfreece.cz; parts@amfreece.cz; website: www.amfreece.com
Phone: +420 582 309 286; Fax: +420 582 360 606

B - MACHINE INSTALATION

1. CONSIGNMENT CONTENT

When unpacking the machine, it is necessary to follow the signs on the package.

If not specified otherwise at the time of the order, the consignment consists of:

- Assembled machine with electroinstallation on the stand
- Cardboard with accessories (specification in section *Spare parts*)
- Thread stand – dismantled
- Opeartional manual with spare parts manual

CAUTION!
Visible damages of the consignment caused during shipment must be reported to the freight forwarder immediately. Check the content of the consignment with the order and inform the manufacturer on any discrepancies. Later claims will not be taken into consideration!

2. STAND ADJUSTMENT

2.1. Once you unpack the machine, move it to its place. Keep the safety distance as in the section **B3**. The machine is supplied with a stand of a standard hight to work on when seated. Recommended stand hight is 860 - 880 mm. Other stand implementacion needs to be discussed with the manufacturer.

2.2. The stability of the stand is ensured with adjusting legs ❶ once their nuts are tighten ❷. Check the levelness of the adjusted table top ❸.

2.3. Remove fixing bands ❹ holding the bed plate. It is wise to fasten the bed plate for any transportation to prevent it from moving.

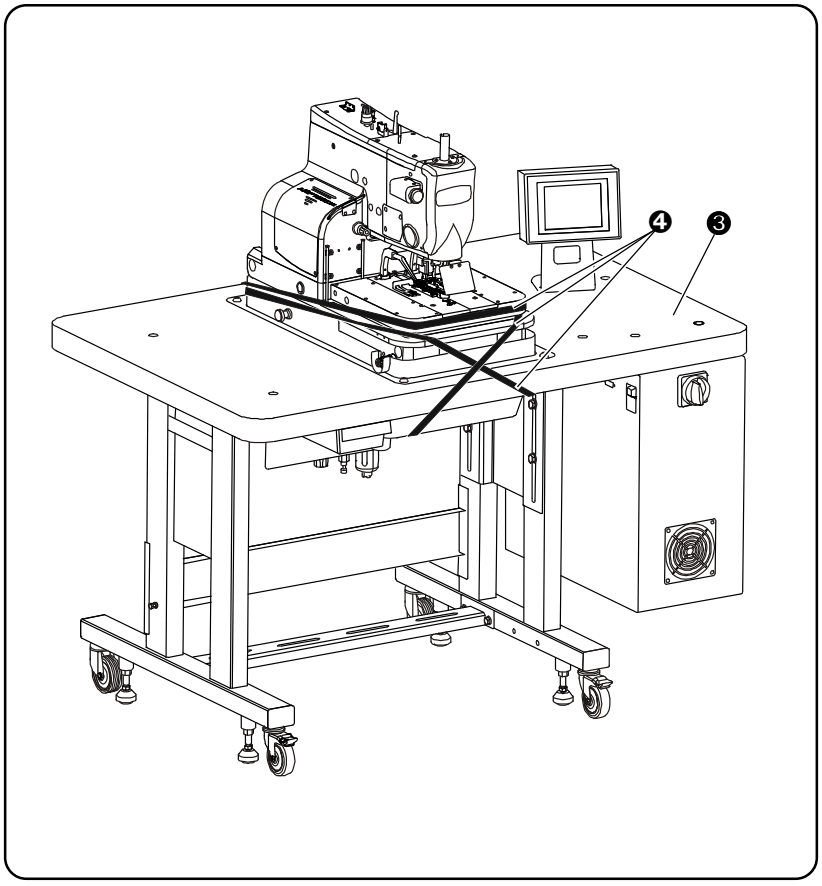

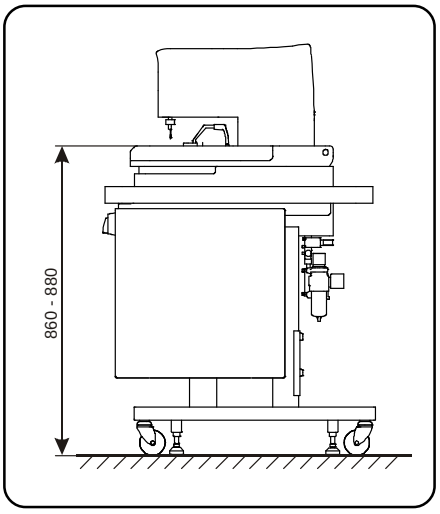

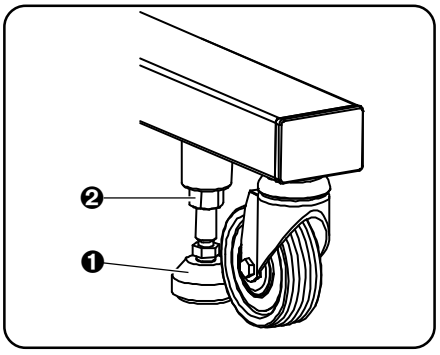

B - MACHINE INSTALATION

3. PLACING MACHINE

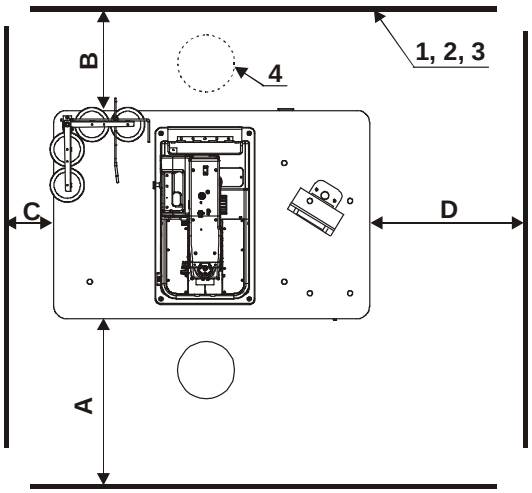

Minimal safety distances	A [m]	B [m]	C [m]	D [m]
1 - wall, machines	0,9	0,6	0,1	0,6
2 - side, table	0,9	0,6	0,1	0,1
3 - service path	1,4	0,2	0	0
4 - second machine operator	1,5	0,9		

4. THREAD STAND INSTALLATION

See the picture for Thread stand assembly.

4.1. Position of the ring ❶ allows the whole stand to be placed onto various thickness table desk. The threaded end of the bar ❻ should not stick out the nut ❺ for more than 1 mm.

4.2. Once the ring is set ❶ insert the washer ❷ so that the slot is oriented towards the ring. Insert thebar into the whole on the table desk ❸, on the right at the back. Tighten the nut ❺ under which the washer ❹ is placed.

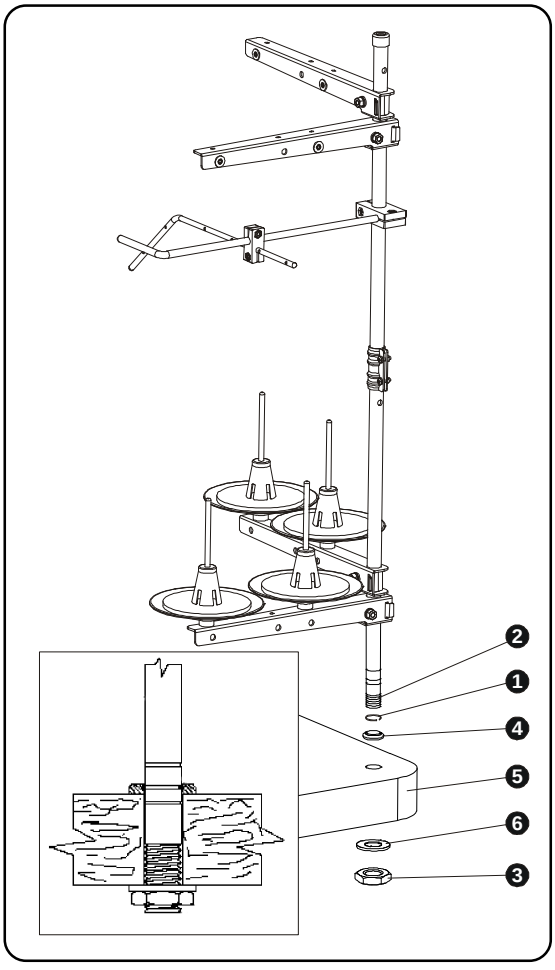

B - MACHINE INSTALATION

5. CHECKING OIL TANK

5.1. To check oil and to install drainage for excess oil, use the tank ❶.

5.2. Screw the tank into the bottom area of the frame ❷.

5.3. Pour out the tank if full ❶ with excess oil !

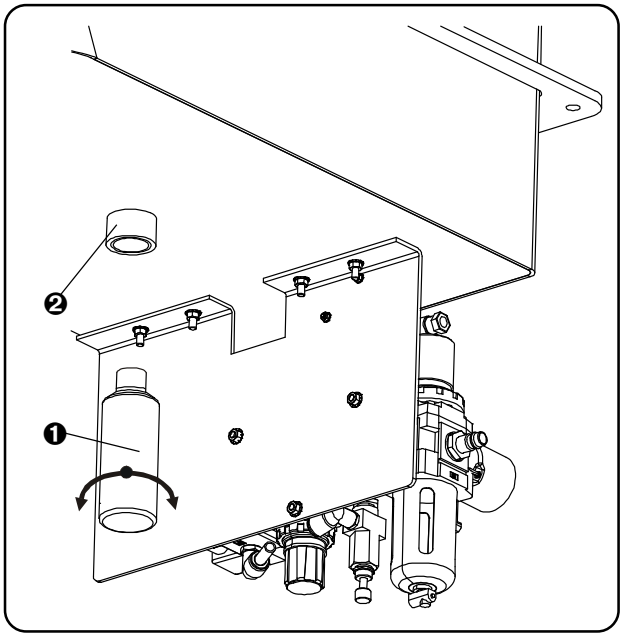

B - MACHINE INSTALATION

6. CONNECTING MACHINE WITH ELECTRICITY AND AIR DISTRIBUTION

6.1. Air adjustment unit can be easily connected with the safety quickjoint socket. We normaly recommend using the socket 25 KE AK 13 (order.no. FESTO 151 776 oznaèen KD -1/4, order.no.RECTUS 38044) – unit with appropriate input ❶. Incoming pressure has to be at least 0,6 MPa. It is possible to connect the air supply differently. The manufacture in that case recommends to add a manual shut-off valve so that the air can be shut off if needed.

6.2. Once the air unit is plugged in, check the set pressure on the regulator gauge ❷. Pressure to be within the range 0,5-0,6 MPa. To adjust the air pressure, slide out the closure ❸. Turning it clockwise, the pressure increases, turning it counterclockwise, the pressure lowers. Slide the closure ❸ in.

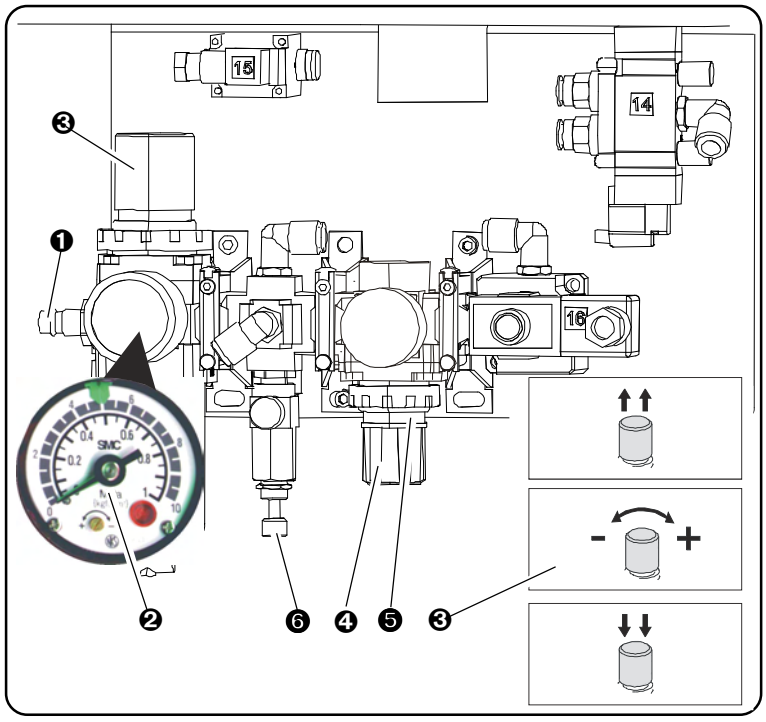

CAUTION!

If the pressure drops below 0,4 MPa, the display shows error E04 *and the machine does not start running.*

The cutting cylinder is set to 0.5 MPa from the manufacturer with the screw ❹ after loosing the nut ❺. If the fabric is not cut correctly, check the cutting block, whether it is not damaged, or the regulator pressure ❹ too low.

At Ultraflex model, check the regulator pressure ❻. It cannot be higher than 0,25 MPa. If this maximum value is not kept, the knife gets damaged.

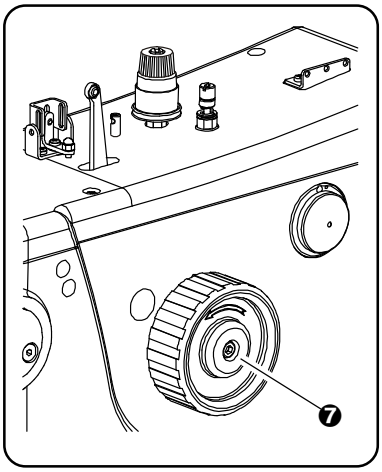

NOTE!

Adjust only such pressure to cut fabric. For short blocks use lower pressure, for long blocks use higher pressure.

6.3. Electricity supply requires the usage of 230V. The socket for electricity distribution must correspond with standardsIEC 364-4-41, security minimal 10A and characteristics C according to EN 60947-2 (possibly 16A with characteristics B). There must be no other appliances connected into the circuit securing the socket. If the machine is plugged-in correctly, the hand wheel ❼ must turn in the direction of the arrow.

NOTE!

There is an interference filter on the machine according to EMC - ÈSN EN 50081-1 and 50081-2. In case there is circuit breaker in the power system, it is necessary to use a filter with stray current and high resistance to surge current in the wire (i.e. typ„S“).

Released 04/2012
E-mail: service@amfreece.cz; parts@amfreece.cz; website: www.amfreece.com
Phone: +420 582 309 286; Fax: +420 582 360 606

C - PROPER USAGE

1. BEFORE STARTING SEWING

1.1. Adjusting needle

Use AMF Reece needles only. Order.no.02.0579.1.111 (NEEDLE 579 - 100 Nm GEBEDUR). Diameter of the needle inlet in the needle bar is2 mm. Needles are surface finished and their shape suits thick fabric sewing. It is not possible to use thicker needles for standard stitch plates.

Suitable Needle Sizes for different and fabric thickness		
Recommended needle thickness (Nm)	**Sewing threads (No.)**	**Fabric**
90	**100 -120**	**Thin fabric**
90 - 100	**70 - 100**	**Standard fabric**
110	**50 - 70**	**Thick fabric**

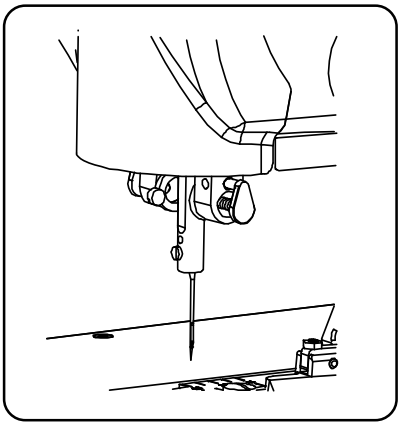

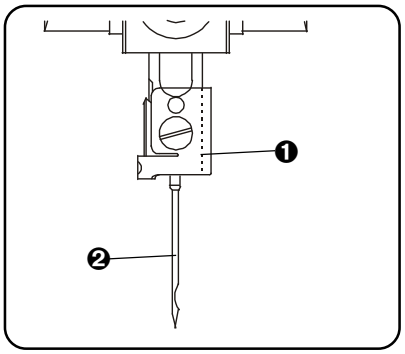

How to adjust needle:

1. Loosen the screw ❶ and remove the original needle.
2. Insert a new needle ❷ so that the flat on the needle arbor is placed vertically to tightening screw ❶. The needle must not have a damaged tip or be broken. To check the straightness of the needle use a gauge or roll it on the flat mat. A good needle does not swing its tip when rolling.
3. Tighten the screw ❶ well.

1.2. Threading

CAUTION !
Before you strat threading, make sure the main switch is off!

The look and the quality of a buttonhole depends on:

- thread elasticity and its resistance to break
- thickness ofused thread – make sure thread is of the same thickness along its all length
- sewn fabric (thickness, density, fibre direction)
- upper and lower thread tension – see **E 29** section
- stitch density – see **A 6** section
- stitch biter – see **E 19** section
- technology of sewing process (fabric clamping - see **E 10** section; stitch distance from edge of cut - see **E 11** section)

Buttonhole properly sewn has:

- symmetric stitch density
- consistent chain shape
- clean eye shape
- even shape and size
- neatly trimmed threads

C - PROPER USAGE

1.3. Threading upper thread

For threading see pictures below. To make threading easier use threading tool ❶ which is part of the machine accessories. Navlékaè ❶ can be ordered (order no 12.0008.6.200). Thread tension (see **E 29** section) needs to be adjusted according to sewing conditions.

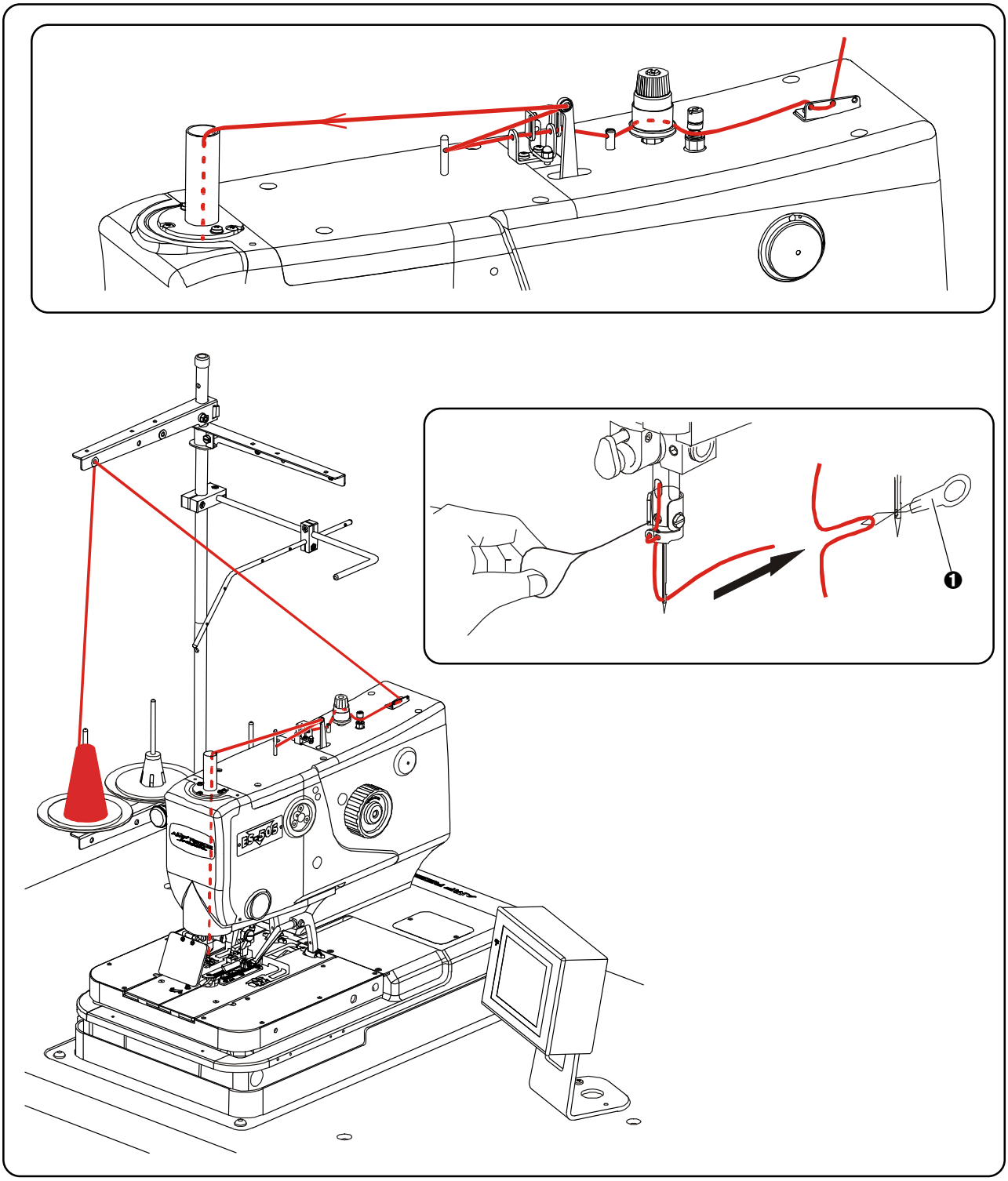

Released 04/2012
E-mail: service@amfreece.cz; parts@amfreece.cz; website: www.amfreece.com
Phone: +420 582 309 286; Fax: +420 582 360 606

C - PROPER USAGE

1.4. Threading bottom thread

See pictures below.

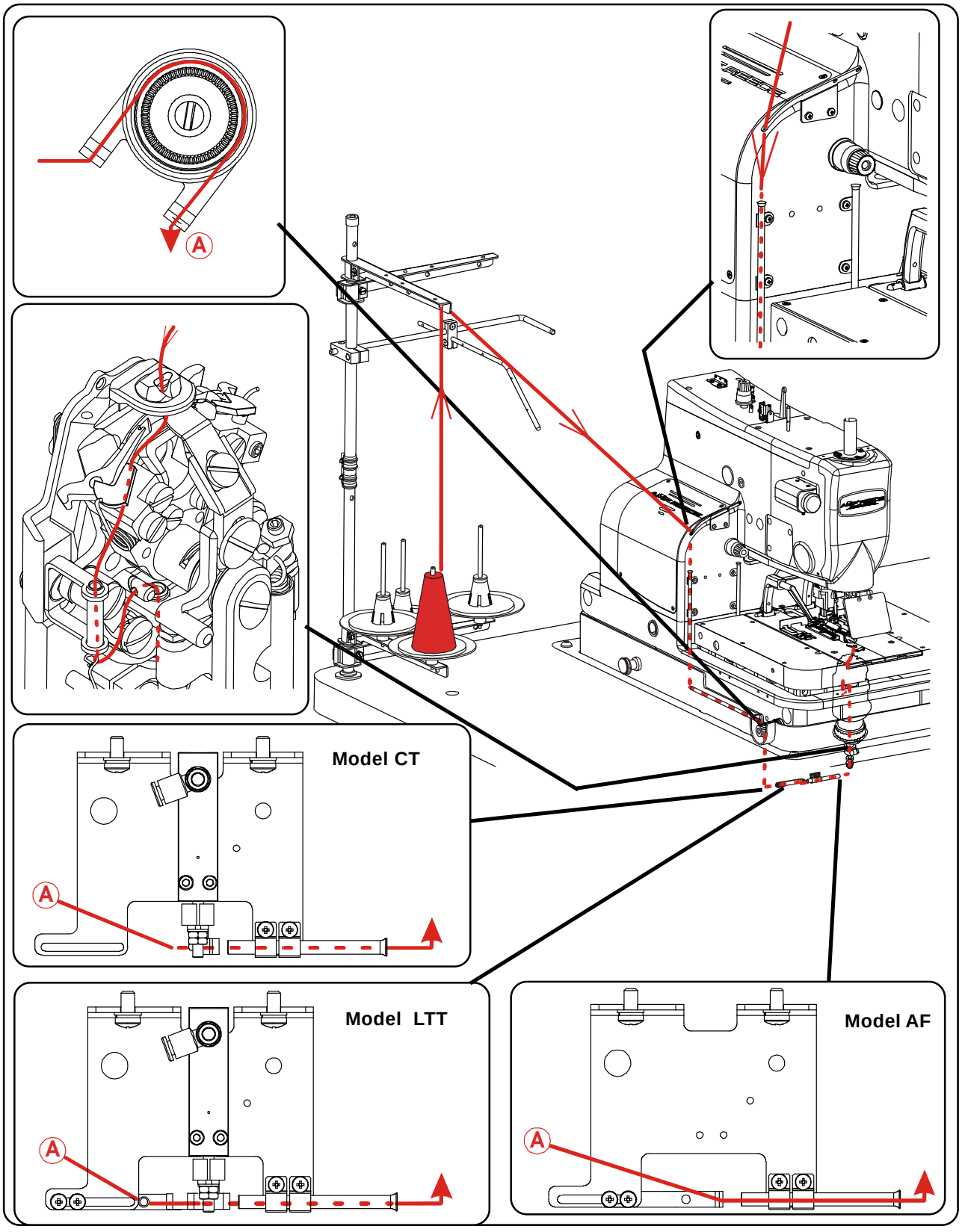

C - PROPER USAGE

1.5. Gimp draw off

See pictures below.

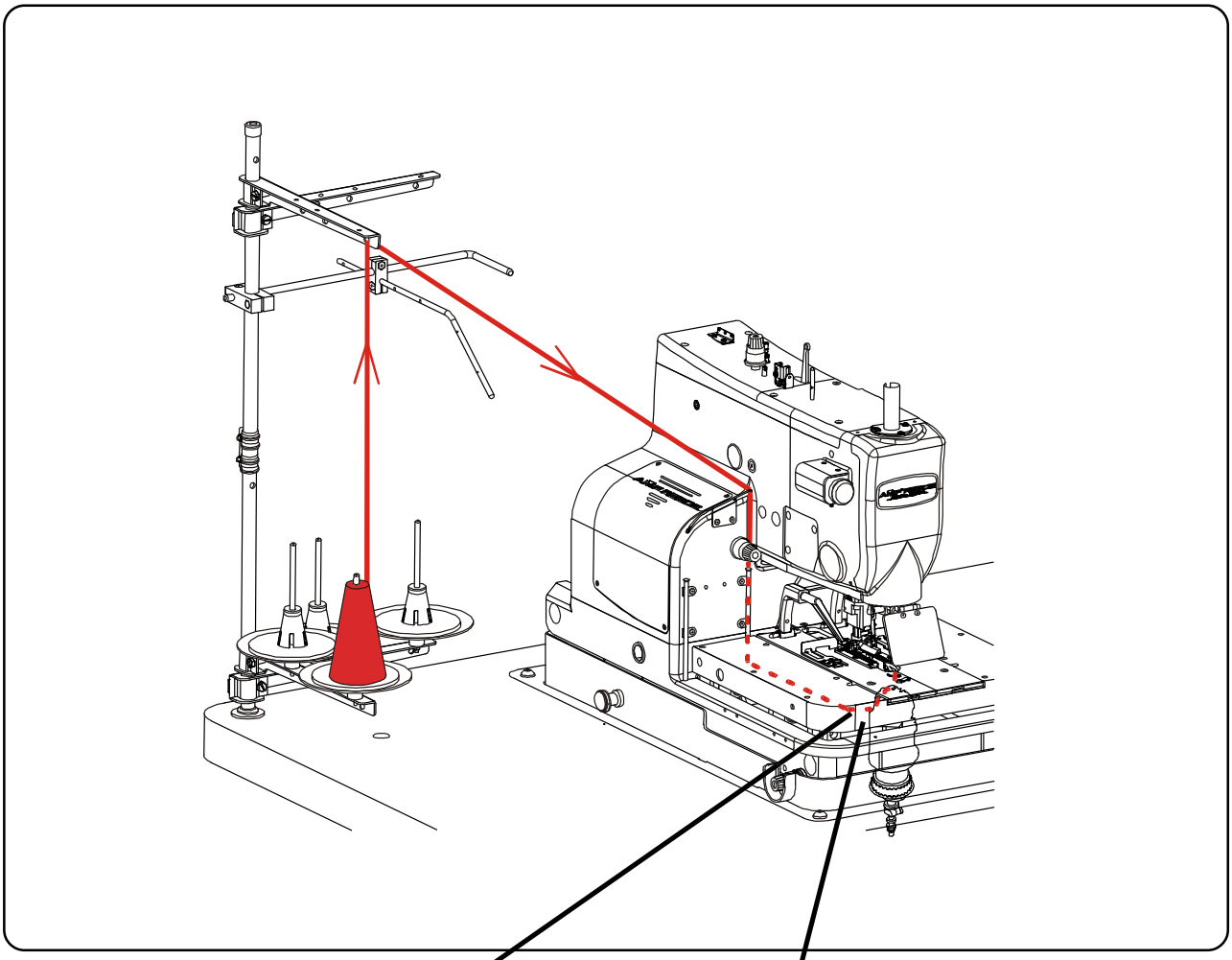

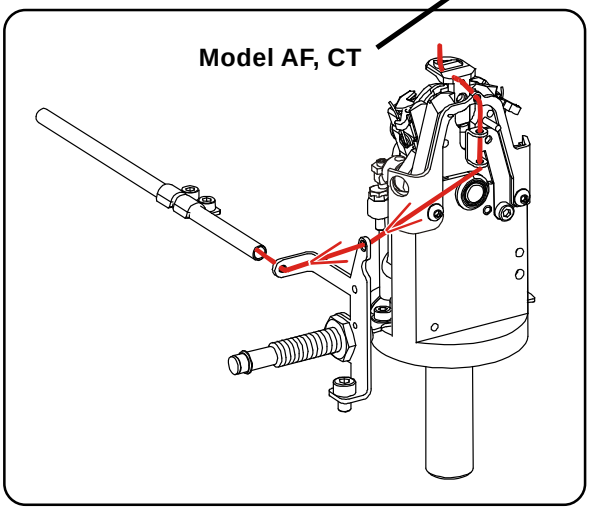

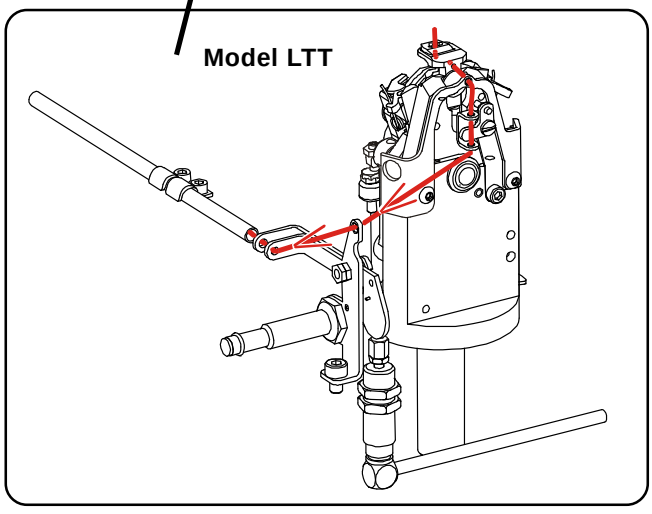

C - PROPER USAGE

2. LUBRICATION

CAUTION!
Before you start lubricating machine mechanisms, switch off power supply and air inlet from the machine!

Note:
To lubricate mechanisms in the machine use the recommended oilj Esso Terestic T68 or Mobil Terestic T68 only.

2.1. Filling up oil

- Before using the machine for the first time, fill up oil tanks. There are two lubrication circles in the machine – one to run needle bar and bite, second to drive sewing mechanism, which is placed at the bottom of the sewing head.
- To access the second tank, tilt the machine head and loosen the security bolt ❶ on the left side of the machine frame. Fill up the tanks with 2/3 at the most.
- Recommended period to check the level of oil is once a month, depending on the machine performance.

CAUTION!
If there is more than 2/3 of oil in the tank, the oil may leak out into the machine.

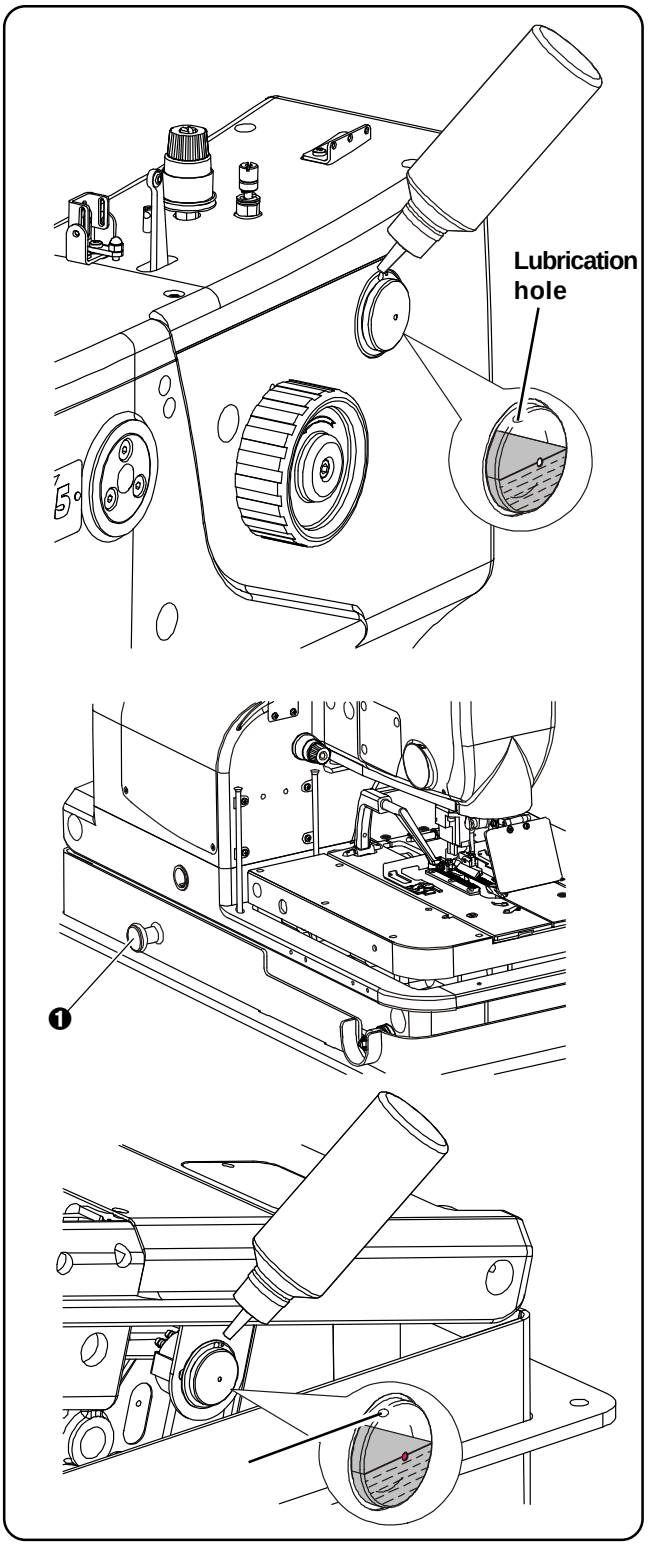

C - PROPER USAGE

2.2. Lubricating important parts

Before you use the machine for the first time or if you have not used it for some time, check and lubricate palces shown in pictures. These places are not lubricated from the tanks and therefore it is necessary to check them every month.

Needle bar area:

- Loosen screws ❶ and remove front cover ❷.
- Put a few drops of oil onto places marked with an arrow.
- Once it is done, put the cover back ❷ and tighten the screws ❶.

Sewing mechanism area:

- For better access to lubricated areas remove clamp plates ❶ from the machine and move the table ❷ into front position.
- Put a few drops of oil onto places marked with an arrow. Once the market places are lubricated, put the clamp plates ❶ back and bring the machine into the home position. See **C3** section.

Needle bar area

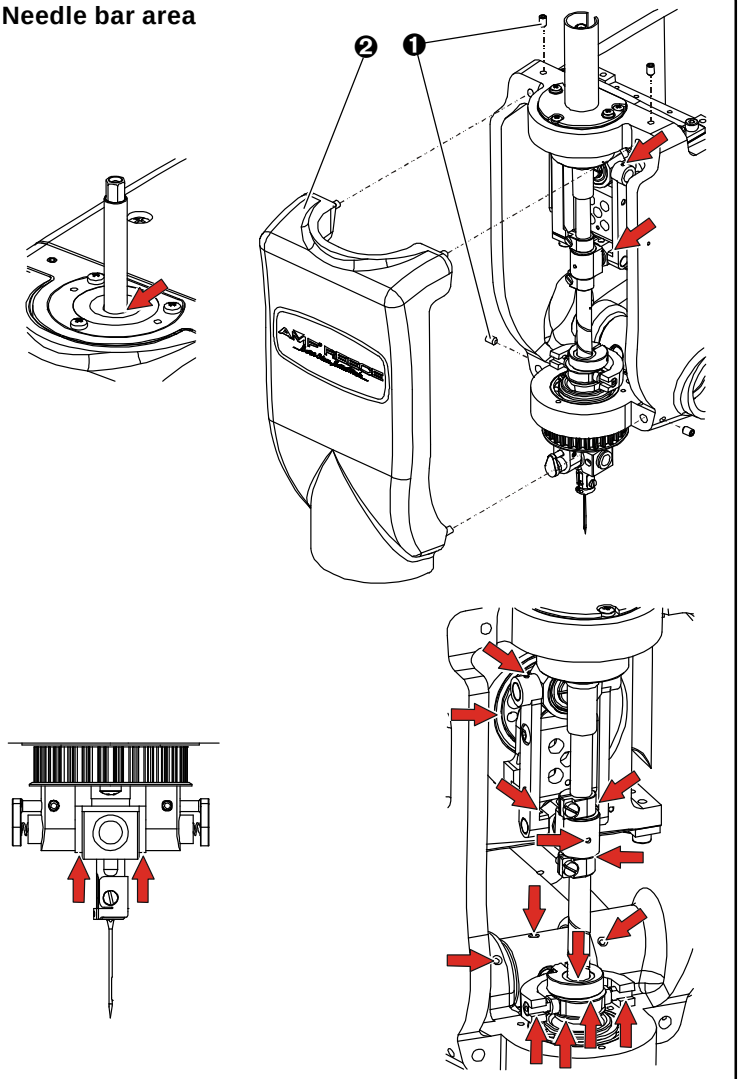

Sewing mechanism area

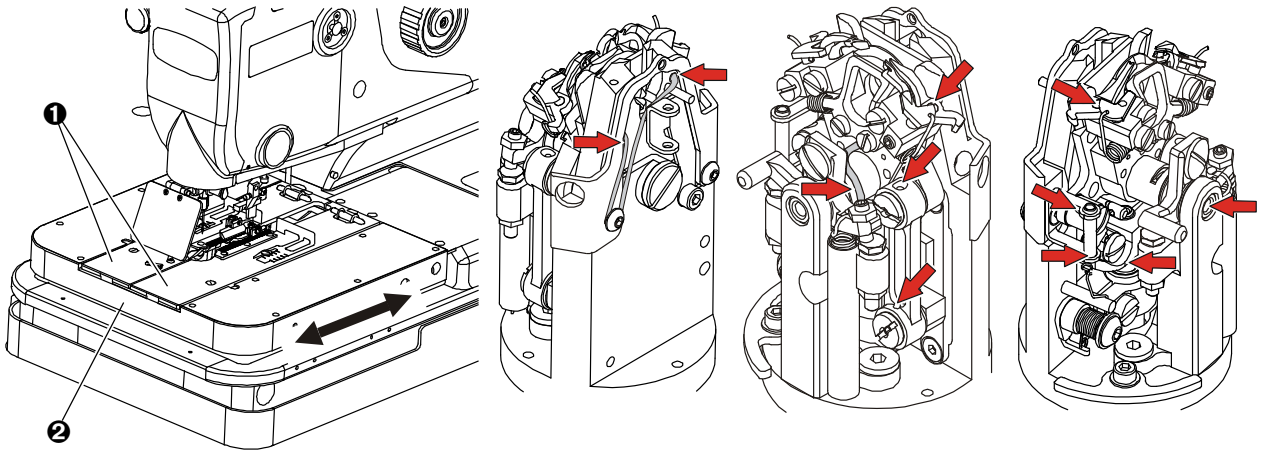

Released 04/2012
E-mail: service@amfreece.cz; parts@amfreece.cz; website: www.amfreece.com
Phone: +420 582 309 286; Fax: +420 582 360 606

C - PROPER USAGE

3. PUTTING MACHINE INTO HOME POSITION FOR SEWING

3.1. Start the main switch ❶ by turning it clockwise into the position **I**.

3.2. Display gets activated and illuminated. The screen ❷ shows information on manufacturer and numbers of programs downloaded into the machine. Wait until the display shows main screen ❸.

3.3. If the main screen shows an error 

message in the field ❹ (the machine is not in the home position), turn the hand wheel ❺, until the needle bar gets to the upper position. Press  ❻ button. If the display shows a different error message, see the section **Troubleshooting**.

3.4. The machine is ready to operate when the display shows ❹ illuminated message in the field . For display description see section **D1**.

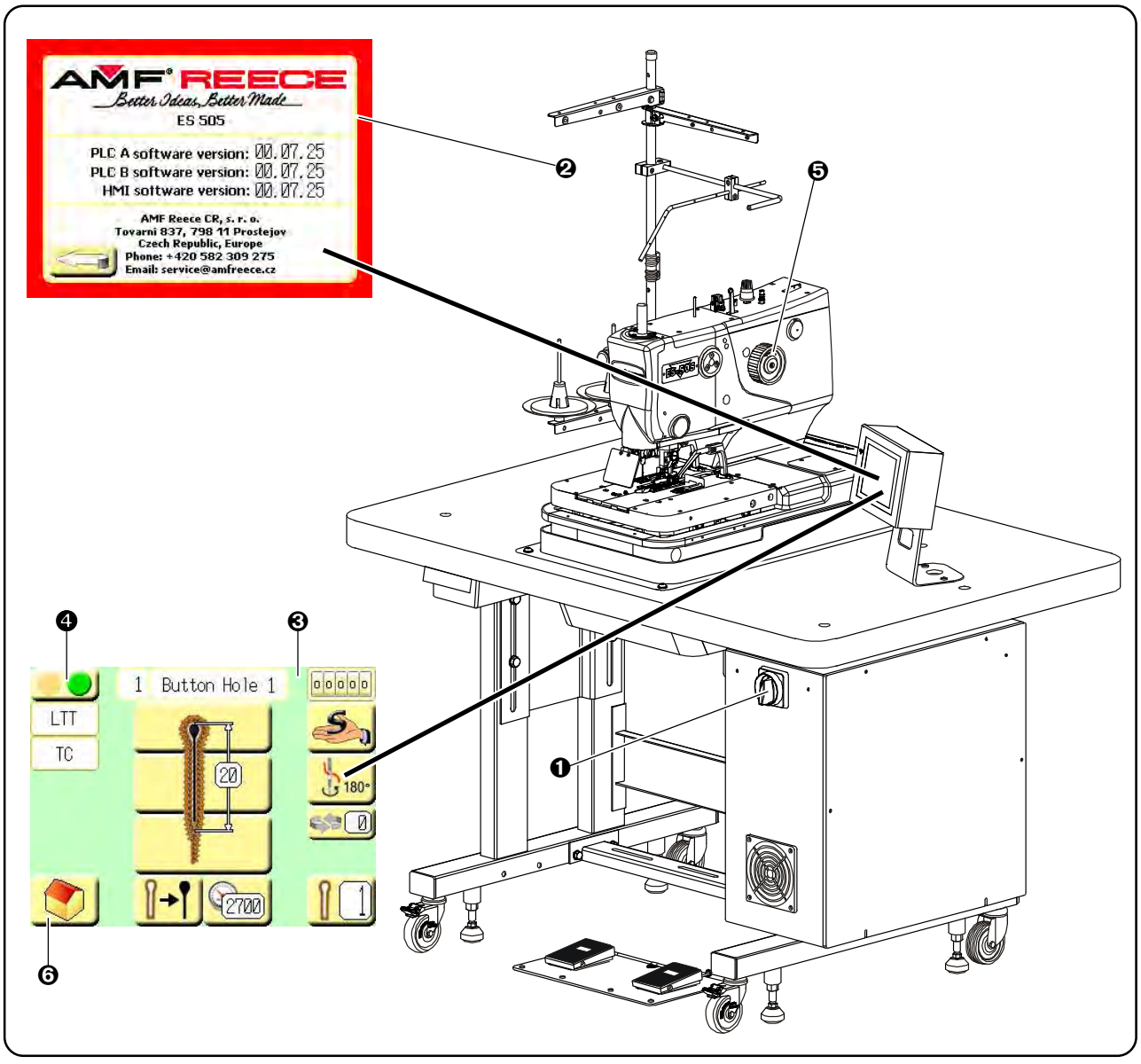

C - PROPER USAGE

4. LOADING FABRIC

4.1. Bring the machine into home position see section **C 3** (with **c**lamps ❶ up).

4.2. Adjust the distance of the buttonhole from fabric edge: Position of the screw ❹ shows approximate distance of the buttonhole from the fabric edge. Loosen the screws ❹ and move the endstops ❷ within 20 - 30 mm. The distance can be increased if requested by the customer. Tighten the screws ❹.

4.3 Insert the fabric. Lean the edges against the endstops ❷, placed at the end of the clamping plates ❸. Press down the left pedal into the first position, close the clamping feet ❶.

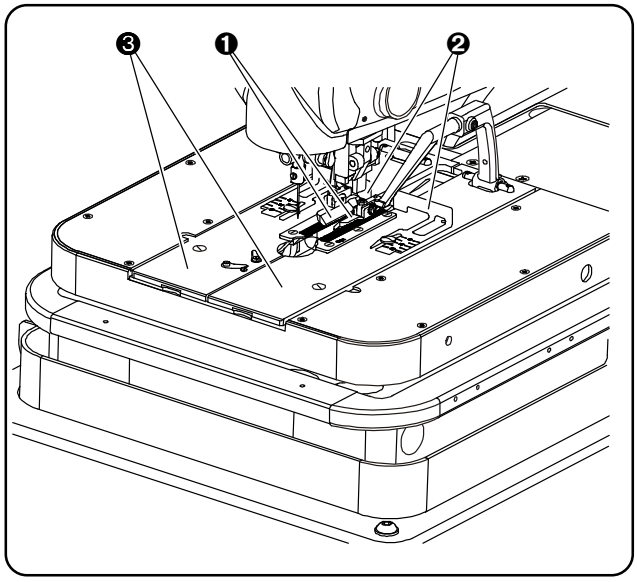

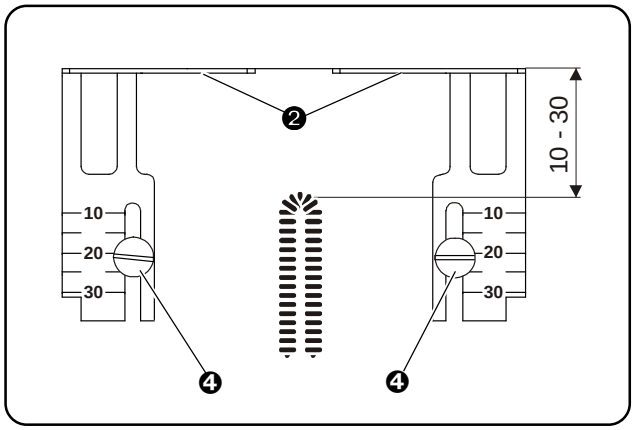

Released 04/2012
E-mail: service@amfreece.cz; parts@amfreece.cz; website: www.amfreece.com
Phone: +420 582 309 286; Fax: +420 582 360 606

C - PROPER USAGE

5. SEWING BUTTONHOLE

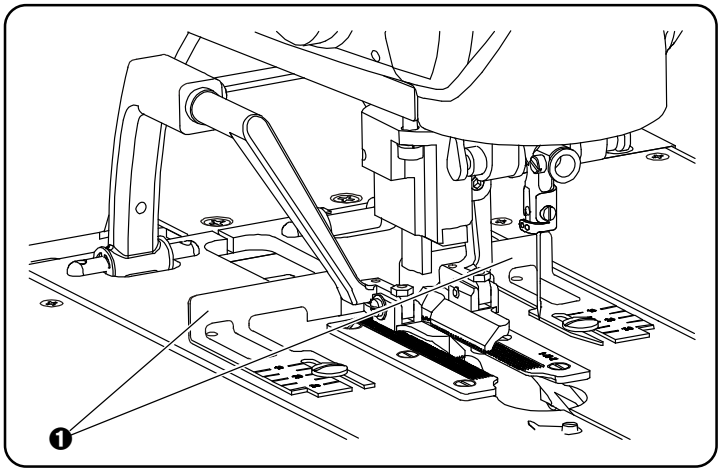

5.1. Bring the machine into the home position to sew (as in section **C3** of this part). Before starting sewing, it is recommended that the machine is left is such state for 3 minutes to warm up.

5.2. Check that threads are threade correctly (see section **C1)**. Lift up the clamp feet and place the workpiece under the machine clamp feet. Front endstops ❶ on the feet are adjustable in length. They help placing the buttonhole correctly.

5.3. Press down the foot pedal ❷ into the first position to close the clamp feet. They clamp the workpiece down. (Letting the pedal up brings clamp feet also up).

5.4. Depressing the right foot pedal ❷ starts sewing the shape of the buttonhole selected in the program. Once the buttonhole is sewn, fabric cut and upper thread trimmed, the clamp feet go up and the machine moves into the home position.

5.5. Once the clamp feet lift up, the workpiece can be moved to sew another buttonhole.

5.6. The machine can be stopped in any time during the cycle with the STOP button ❸ on the machine arm. Releasing the button keeps the machine idle and the display shows error message E01, see section **Troubleshooting.**

5.7. Once the work is finished, switch the machine off with the main switch ❹. It is recommended that the power cord ❺ is unplugged from the soket and air line switched off to ensure safety machine stop.

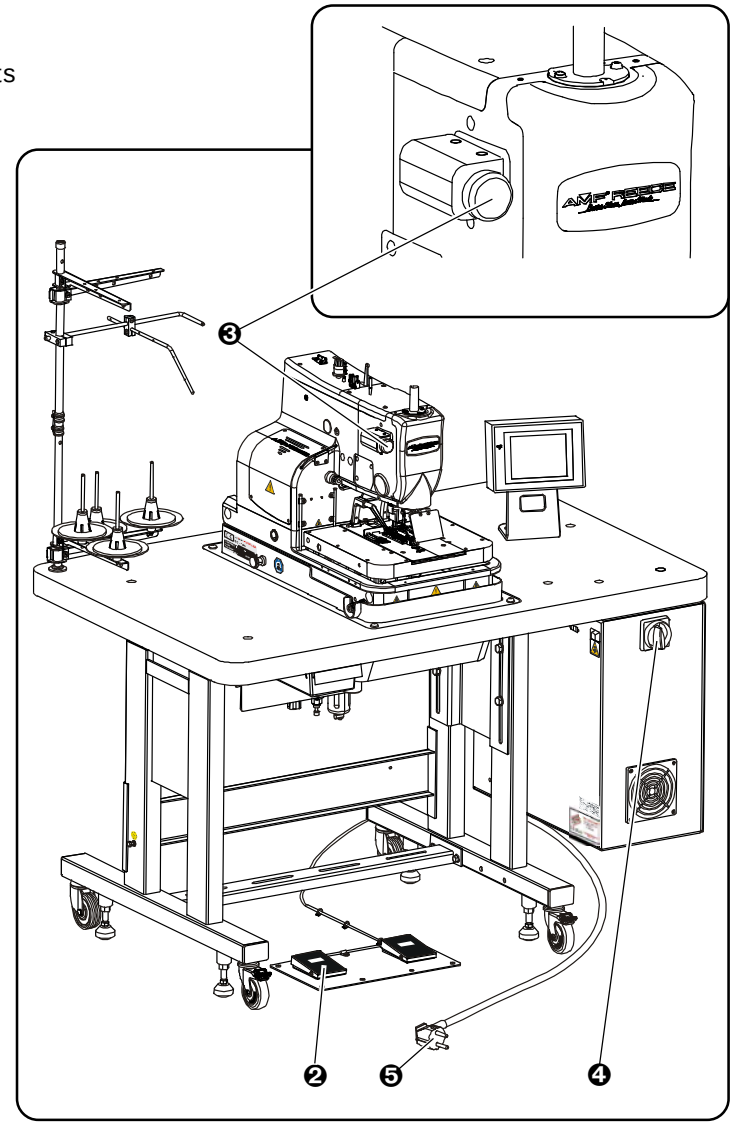

C - PROPER USAGE

6. BROKEN THREAD

If thread gets broken during buttonhole sewing, follow the instructions:

6.1. Press down the left pedal while sewing. The machine stops and the display ❶ changes screens ❷. The workpiece is clamped down and held by the clamp feet, the needle moves into the upper dead point.

6.2. See section **C 1** for threading.

6.3. There are buttons + and −, on the right display, which move the bed plate 2 stitches forward or 2 stitches backwards.

6.4. Pressing down the left foot pedal again finishes the sewing cycle.

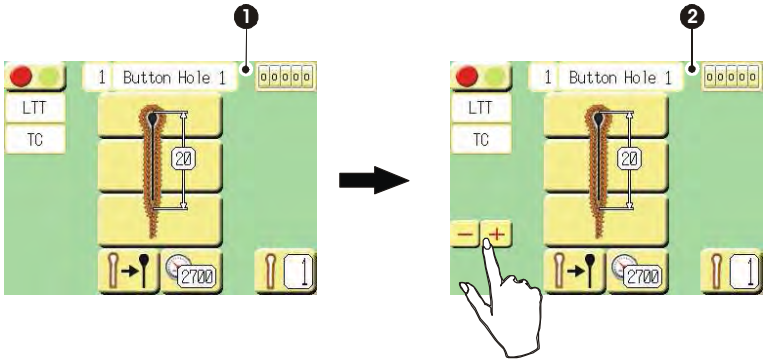

Released 04/2012
E-mail: service@amfreece.cz; parts@amfreece.cz; website: www.amfreece.com
Phone: +420 582 309 286; Fax: +420 582 360 606

D - MACHINE CONTROLS

1. TOUCH SCREEN

> ***CAUTION!***
> - *Machine parameters and functions are controlled by the color touch screen GOT 1000. Please read carefully the following section **D** before setting up the parameters.*
> - ***ES 505** machine uses a universal program that enables various sewing of buttonholes just changing clamp plates. Please make sure that the clamp plates in the machine correspond with the machine modification set up.*

1.1. DISPLAY MENU

The following listing will help you better understand the display menu. It shows all functional buttons of the main screen and sub-screens with detailed description of buttonhole parameters to be set. The last column “Chapter” provides a link to each of all chapters with more details in process of programming.

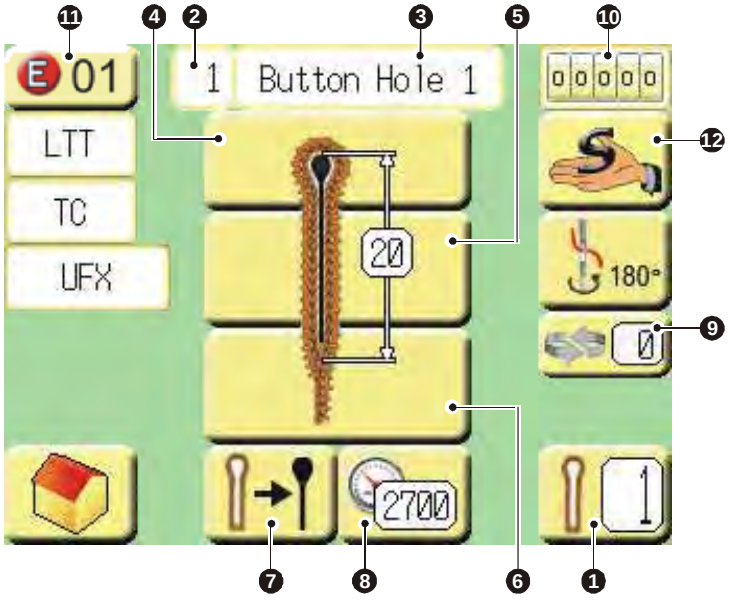

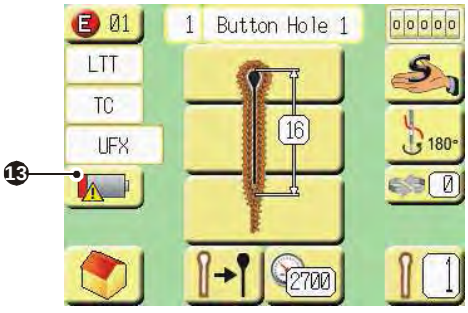

D - MACHINE CONTROLS

Button/ icon	Current/ following screen	Screen name/ icon name	Parameter setting	Chapter
❶ 		Numeric keyboard	Example: Buttonhole Type Number of cycles	D 2.1.
❷ 		List of programs screen	Buttonhole program names	D 2.1.
❸ 		Alphanumeric keyboard	Buttonhole program names	D 2.2.
❹ 	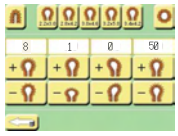	Eye parameters screen	Number of stitches Flattening or stretching Eye tilting from the buttonhole vertical axis Stitch tilling	D 2.3.1.
❹ 	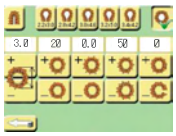	Round buttonhole parameters screen	Diameter of the round buttonhole Number of stitches Stitch lenght setting Stitch tilting Number of over-sewn stitches at the end of the buttonhole	D 2.3.2.
❺ 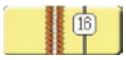	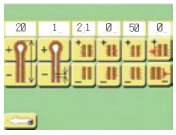	First and second raw of stitches screen	Buttonhole lenght Stitch density Stitch bite Aligning first and second raw of stitches Stitch tilting X axis shift	D 2.3.3.
❻ 		Open end buttonhole parameters screen	Number of stitches at the end of the second raw of stitches	D 2.3.4.1.
❻ 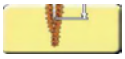	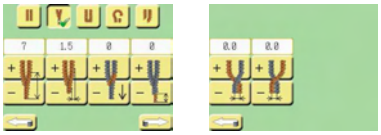	Fly bar buttonhole parameters screen	The lenght of over-sewing Buttonhole width Number of stitches at the end of the second raw of stitches Number of stitches at the end of the linear ending	D 2.3.4.2.
❻ 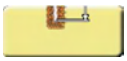		Cross bar buttonhole parameters screen	Bar length Stitch density Correction of position in X and Y axes Stitch bite Angle turning	D 2.3.4.3.
❻ 		Round end buttonhole parameters screen with the start of sewing in the eye	Number of stitches Number of over-sewn stitches	D 2.3.4.4.

Released 04/2012
E-mail: service@amfreece.cz; parts@amfreece.cz; website: www.amfreece.com
Phone: +420 582 309 286; Fax: +420 582 360 606

D - MACHINE CONTROLS

Button - icon	Current / following screen	Screen name - icon name	Parameter setting	Chapter
❻ 	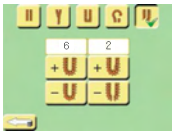	Round end buttonhole parameters screen with the of sewing in the bar	Number of stitches Number of over-sewn stitches	D 2.3.4.5.
❼ 	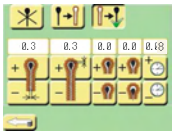	Buttonhole cutting parameters screen	Cutting types Cutting gap Distance of stitches from the cut to inner eye stitches Correction of cut in X / Y axes Cutting time delay	D 2.4.
❼ 	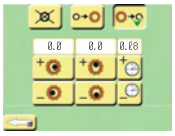	Round buttonhole cutting parameters screen	Cutting types Correction of cut in X / Y axes Cutting time delay	D 2.5.
❽ 	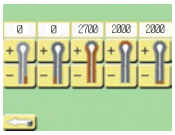	Buttonhole sewing speed parameters	Number of stitches sewn slowly at the beginning of sewing Nuber of stitches sewn slowly at the end of sewing Sewing speed in the firs and second raw of stitches Sewing speed in the eye Sewing speed in the bar	D 2.7.
❽ 	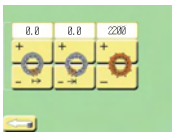	Round buttonhole sewing speed screen	Number of stitches sewn slowly at the beginning of sewing Number of stitches sewn slowly at the end of sewing Round buttonhole sewing speed Over-sewing speed	D 2.8.
❾ 	 	Standard cycling program screen	Cycling program from 1 to 47 Buttonhole program in chosen cycling program	D3.1. D3.2.
❿ 	 	Productivity screen	Counter mode Total machine productivity	D 4.1.1.
⓫ 	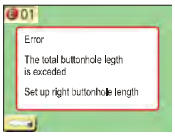	Error mesages screen	Error number Error description Instructions to eliminate errors	D4.2.
⓬ 	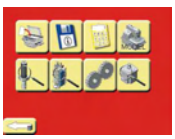	Service menu screen	Setting machine parameters/ for traines service mechanics only	E2.1.
⓭ 	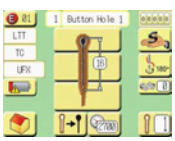	The main screen	Low battery alarm	

1.2. BUTTONS AND ICONS COMMONLY USED

Bellow mentioned buttons and icons are routinely seen on display screens. They are not described in following chapters. Please study carefully their meanings before initioal programming.

Button	Name of the button	Description
	Machine home position	Pressing the buuton the machine gets to home position, it means the machine is ready to start sewing a buttonhole.
	Machine moving	Machine is moving and is not possible to make any adjustments
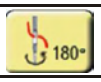	Threading	Pressing the button turns the needle of 180°to mak e the threading easier
	Back	Pressing the button saves data and gets you back to the previous screen
	Cancel	Pressing the button gets you back to the previous creen without any change of parameters
	Delete	Pressing the button details all written letters and marks
	Delete letter	Pressing the button delets the written letter or the mark
	Save	Pressing the button saves set parameters and gets you back to the previous screen
	Correction parameter values	Press **+** or **-** button to correct specific sewing parameters of a buttonhole
	Highliting selection	Indication of selected sewing parameters
	Icon	Represents active version: AF / LTT / CT 13-26 / CT 20-32 / RDE / RDE CT
	Icon	Repersents active version TC
	Icon	Represents active model Ultraflex
	Icon	Represents active model Ultraflex and active optical sensor

Released 04/2012
E-mail: service@amfreece.cz; parts@amfreece.cz; website: www.amfreece.com
Phone: +420 582 309 286; Fax: +420 582 360 606

1.3. BEFORE INITIAL PROGRAMMING

WARNING!

- *Before initial sewing make sure you understand how to set up the display: eye shape, sewing speed and how to change it, machine modification, cutting space, cycling mode.*
- *The display in the service mode is protected with a password against unskilled settings. Before starting programming for the first time, it is necessary to enter a password to activate the display buttons.See chapter **E.2.2.** to enter the password.*
- *Follow instructions in chapter **D.2.** to set up button parameters correctly. If setting not correct, needle bar or needle may break, material or the machine can get damaged.*
- *Programming procedure is explained step by step from program name to concrete sewing parameters.*

2. PROGRAMMING

2.1. BUTTONHOLE PROGRAM OPTIONS

Set parameters are automatically and continuously saved during the whole programming process. If you wish to modify a program, which has been already saved in the machine memory, proceed the same way as when saving the program or use the screen with program listing.

> ***NOTE!***
> *Before the initial programming of buttonhole parameters as described in **D1 - D2,** it is necessary to choose a buttonhole program.*

The machine memory can save up to 99 different buttonhole sewing programs. Programs 1 to 94 can be programmed as you like.
Programs **95** to **99** are set by the manufacturer and cannot be modified. See chapter **E1** of this manual for the list of those fixed programs.

How to choose buttonhole program:
Press the button ❶ on the main screen. Numeric keyboard comes up. Choose a required buttonhole program number from 1-94. The selected number comes up in the upper part of the numeric keyboard screen - ❷. Save the setting by pressing the button ❸ and begin programming of individual sewing parameters described in chapter **D2.2**.

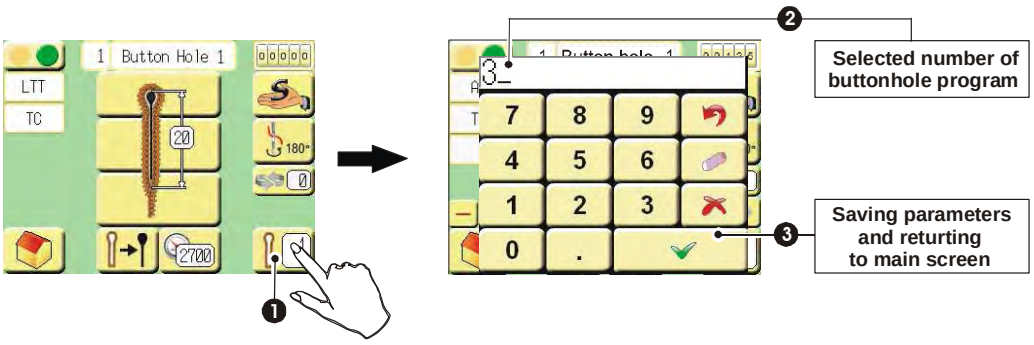

How to chose a buttonhole program from saved programs:
Press the button ❶ on the main screen. The screen with list of programs comes up.
Choose a required buttonhole program from the list of saved programs ❷. Press the selected button. That confirms your choice and brings you back to the main screen.

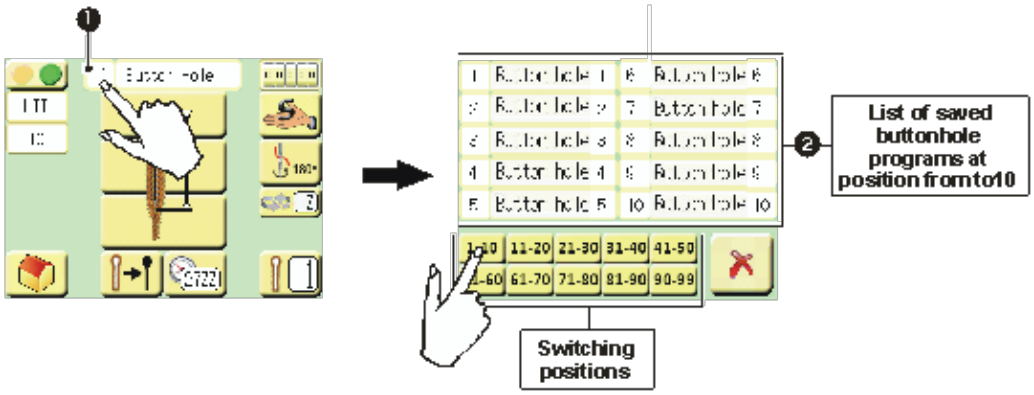

Released 04/2012
E-mail: service@amfreece.cz; parts@amfreece.cz; website: www.amfreece.com
Phone: +420 582 309 286; Fax: +420 582 360 606

D - MACHINE CONTROLS

2.2. PROGRAM NAME OPTIONS

To make individual programs easier to find it is possible to save each program under a name. A program name can have a combination of maximum 14 alphanumeric symbols.

Procedure:
Press the button ❶ on the main screen. Keyboard comes up. Choose a required program name. You can see the name in the upper part of the main screen ❷.
Save the setting by pressing the button ❸.

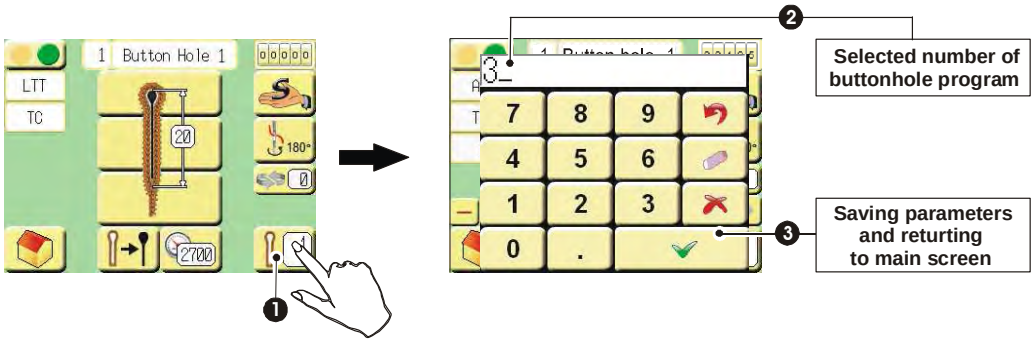

2.3. SETTING BUTTONHOLE PARAMETERS

Buttonhole parameter screen enable setting of buttonhole parameters as well as the way of their sewing. Before the initial sewing of the buttonhole, it is necessary to set parameters of the eye, first and second raw of stitches and the ending (type of bar). Furthermore cutting and sewing speed parameters need to be set.

2.3.1. SETTING EYE PARAMETERS

Press the button ❶ on the main screen or the button ❷ on the main screen of the round buttonhole. The screen with eye parameters comes up. You can choose a buttonhole without eye, with eye or round buttonhole.

If you press the button ❸, buttonhole without eye is activated.

Pressing any of the buttons ❹, indicates that the buttonhole with eye is active. As you can see from individual buttons marking, following eye sizes can be set: 2,2x3,0; 2,8x4,2; 3,0x4,6; 3,2x5,0 or 3,4x4,2 (all in mm).
In that case set eye parameters as fololows**:**
Press the button ❻ and correct the number of stitches in the eye. Range 4 - 20.
Press the button ❼ and flatten or stretch the eye. Range -2.0 **+**3.0 mm.
Press the button ❽ and choose angle from the vertical axis of the buttonhole. Range **±** 1.0.
Press the button ❾ and specify feeding in the eye (stitch angle in the eye) Range 50 - 100 %.

Pressing the button ❺, round buttonhole is selected. This is only possible at AF model. For detailed setting of round buttonhole parameters see chapter **D 2.3.2. and D 2.5.**

For model type selection see chapter **E 2.6.1.**

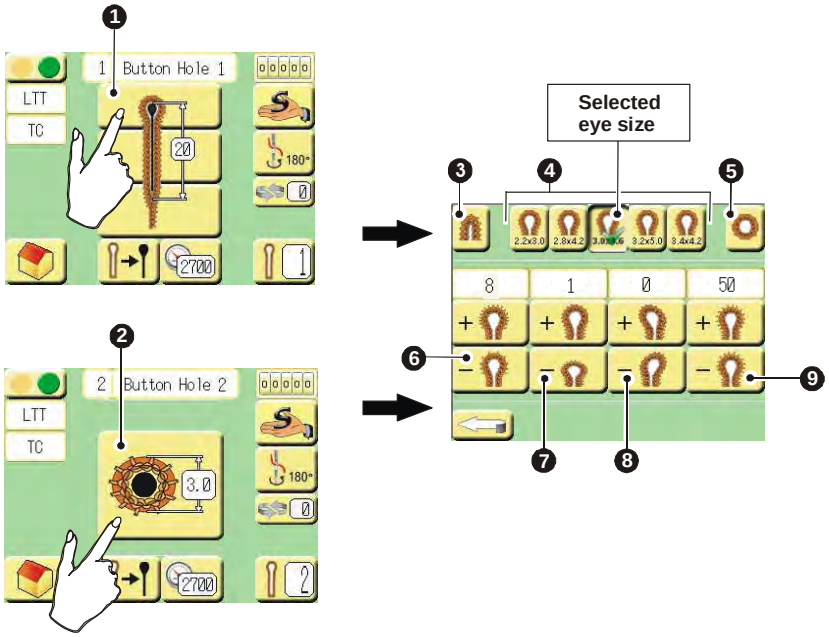

Released 04/2012
E-mail: service@amfreece.cz; parts@amfreece.cz; website: www.amfreece.com
Phone: +420 582 309 286; Fax: +420 582 360 606

D - MACHINE CONTROLS

2.3.2. SETTING PARAMETERS ROUND BUTTONHOLE

Press the button ❶ on the main screen of the round buttonhole. Round buttonhole parameters screen comes up at AF model. Here you can choose a buttonhole without eye, with eye or round buttonhole (buttons ❷).

Press the button ❸ and the round buttonhole is highlighted active.
Press the button ❹ and set the inner buttonhole diameter within the range 2,0 - 7,0 mm.
Press the button ❺ and set the number of stitches in the buttonhole within the range 10 - 60.
Press the button ❻ a set the bite within the range ± 0,3 mm.
Press the button ❼ and set feeding in the buttonhole (stitch angle) within the range 50 - 100 %.
Press the button ❽ and define the number of oversewing stitches at the end of the buttonhole, range 0 - 9.

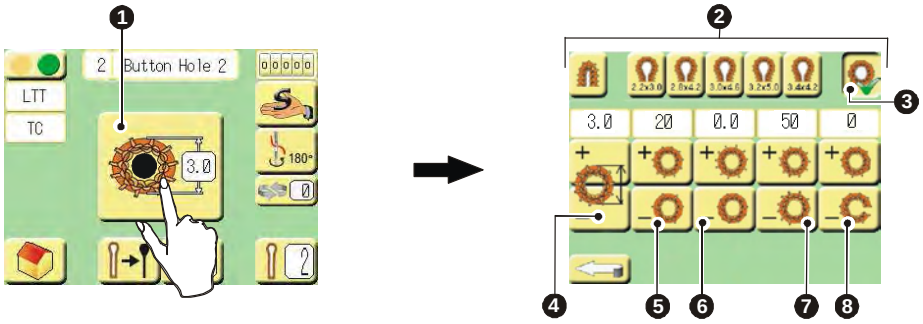

D - MACHINE CONTROLS

2.3.3. SETTING PARAMETERS OF FIRST AND SECOD RAW OF STITCHES

Here you set the buttonhole length and stitch features – density, bite and position of stitches.

Press the button ❶ on the main screen. First and second raw of stitches screen comes up.
Press the button ❷ and set the buttonhole length (it depends on machine type).
Press the button ❸ and define the stitch density within the range 0,5 - 2.0 mm
Press the button ❹ and set the bite within the range ± 0,3 mm.
Press the button ❺ and straighten the first and second raw of stitches within the range ± 1.0 mm.
Press the button ❻ and set feeding in the first and second raw of stitches witin the range 50 - 100.
Press the button ❼ and define X axis movement within ± 1.

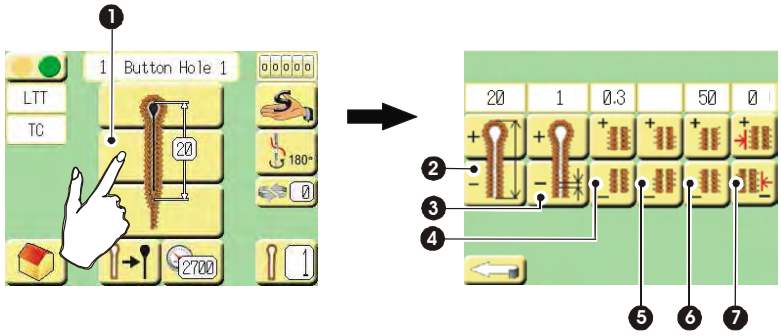

CAUTION!

If the display shows E 50, *it means that the total buttonhole length is exceeded – see section* ***Troubleshooting.***

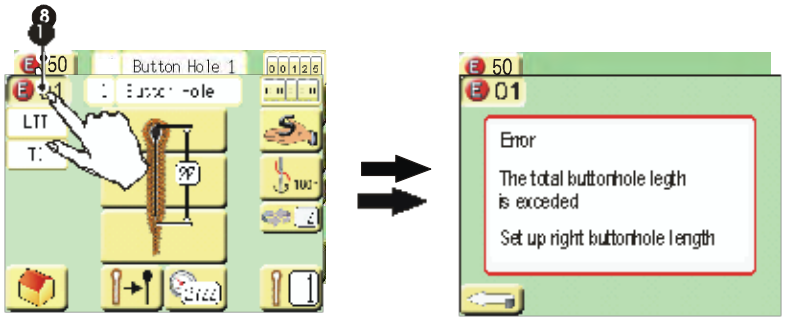

Released 04/2012
E-mail: service@amfreece.cz; parts@amfreece.cz; website: www.amfreece.com
Phone: +420 582 309 286; Fax: +420 582 360 606

2.3.4. BUTTUNHOLE ENDING SETUP

Buttonhole can have open end, fly bar, cross bar or round end – see section **A 7.1.** For each ending setup follow the instructions in the chapters bellow.

2.3.4.1. SETTING BUTTONHOLE OPEN END

Press the button ❶ on the main screen. The screen shows possible buttonhole ends.
Use buttons ❷ to select the required buttonhole end.
Press the button ❸, which stand for the open end of an buttonhole.
Press the button ❹ and add or remove the number of stitches in the range of ± 5 at the end of the second raw of stitches.

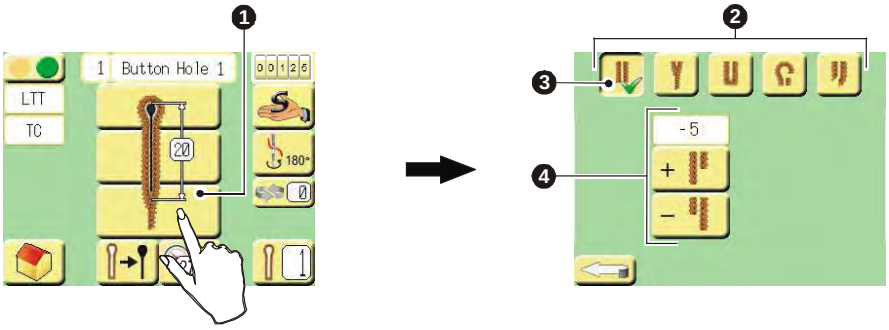

2.3.4.2. SETTING BUTTONHOLE FLY BAR

Press the button ❶ on the main screen. The screen shows possible buttonhole ends.
Use buttons ❷ to select the required buttonhole end.
Press the button ❸, which stand for the fly bar end of the buttonhole.
Press the button ❹ to specify the length of oversewing. In the range of 3 - 29 mm.
Press the button ❺ correct the stitches within the range 0,5 - 2,00 mm so that hey overlap.
Press the button ❻ and add or remove the number of stitches in the range of ± 5 at the end of the second raw of stitches in the fly bar.
Press the button ❼ and add or remove stitches at the end of the second raw in the fly bar ± 5 stitches.
Press the button ❽ and correct the .....in the fly bar ± 5 stitches.
Press the button ❾ correct the .....in the fly bar ± 5 stitches.

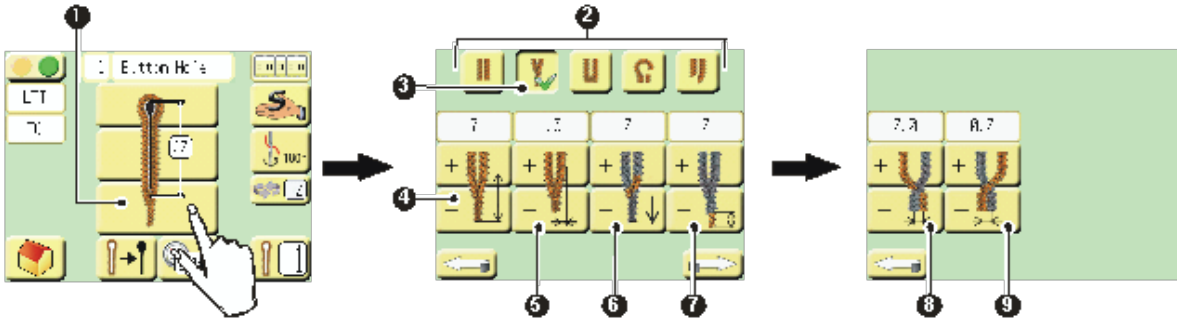

2.3.4.3. SETTING BUTTONHOLE CROSS BAR

Press the button ❶ on the main screen. The screen shows possible buttonhole ends.
Use buttons ❷ to select the required buttonhole end.
Press the button ❸, which stand for the cross bar of an buttonhole.
Press the button ❹ and specify the length of the cross bar within the range 3.0 - 6,5 mm.
Press the button ❺ and define the number of stitches in the cross bar, within the range 0,5 - 1.5 mm.
Press the button ❻ and set up the position of the cross bar against the Y axis within the range -0,5 + 1,0 mm.
Press the button ❼ and set the width of stitches within the range ± 0,5 mm.
Press the button ❽ and adjust the position of the cross bar in X axis within the range ± 1 mm.
Press the button ❾ and set up the angle of cross bar displacement within the range ± 15°.

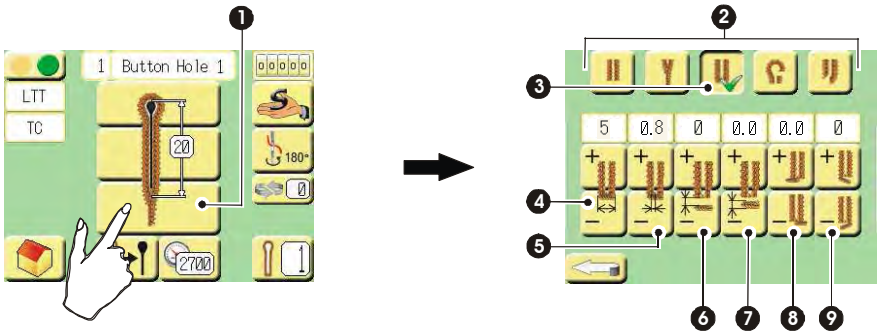

2.3.4.4. SETTING ROUND END OF BUTTONHOLE WITH SEWING STARTING IN EYE

Press the button ❶ on the main screen. The screen shows possible buttonhole ends.
Use buttons ❷ to select the required buttonhole end.
Press the button ❸, which stand for the round end of an buttonhole with sewing starting in the eye.
Press the button ❹ and set up the number of stitches within the range 4 - 20.
Press the button ❺ and specify the number of overlapping stitches in the eye within the range 0 - 5.

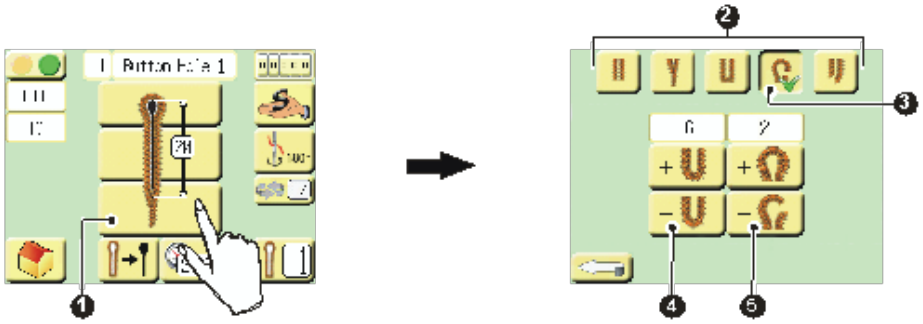

Released 04/2012
E-mail: service@amfreece.cz; parts@amfreece.cz; website: www.amfreece.com
Phone: +420 582 309 286; Fax: +420 582 360 606

2.3.4.5. SETTING ROUND END OF BUTTONHOLE WITH SEWING STARTING IN EYE

Press the button ❶ on the main screen. The screen shows possible buttonhole ends.
Use buttons ❷ to select the required buttonhole end.
Press the button ❸, which stand for the round end of an buttonhole with sewing starting in the bar.
Press the button ❹ and set up the number of stitches in the round end within the range 4 - 20.
Press the button ❺ and specify the number of overlapping stitches within the range 0 - 5.

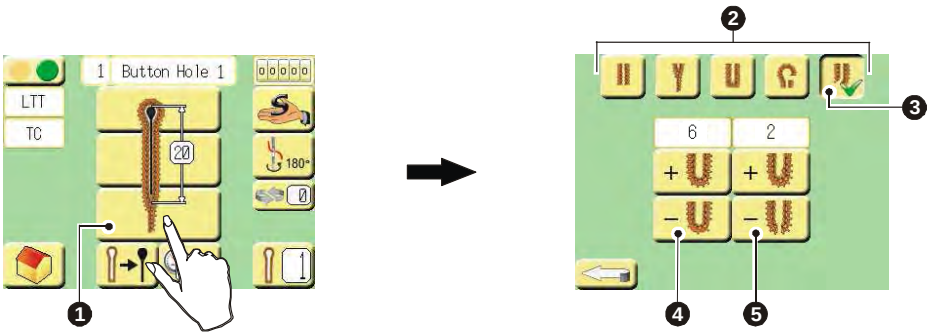

2.4. SETTING BUTTONHOLE CUTTING

Cutting options can be set up with the buttons ❷, ❸ and ❹ as follows. Apart from that, and if needed, a buttonhole can be cut independently of set up program – see chapter **E 3.** Flexible cutting is provided by the Ultraflex model – see chapter **D 2.8.**

Using these buttons ❺, ❻, ❼, ❽ and ❾ you can specify exact dimensions and placement of the cut.

Press the button ❶ on the main screen. The buttonhole cutting screen comes up.
Use this button ❷ to select *no cutting* option.
Use this button ❸ to select cutting before sewing (CB).
Use this button ❹ to select cutting after sewing (CA).

Procedure:
Press the button ❺ and choose the dimension of the cutting gap. Set the distance between the first and second raw of stitches within the range from 0,2 to 1,2 mm.
Press the buttono ❻ and define the space of stitches from the piercing to the eye inner stitching within the range from 0,2 to 1,2 mm.
Press the button ❼ and adjust the buttonhole cutting in the X axis within the range ± 1,5 mm.
Press the button ❽ and adjust the buttonhole cutting in the Y axis within the range ± 1,5 mm.
Press the button ❾ and set the period of time for the knife to stay in the cutting area within the range 0,0 - 0,4 s.

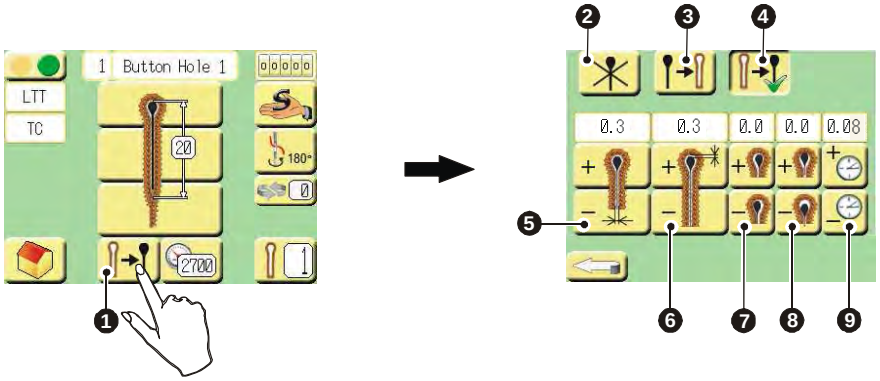

Released 04/2012
E-mail: service@amfreece.cz; parts@amfreece.cz; website: www.amfreece.com
Phone: +420 582 309 286; Fax: +420 582 360 606

D - MACHINE CONTROLS

2.5. SETTING ROUND BUTTONHOLE CUTTING

Cutting options can be set up with the buttons ❷, ❸ and ❹ as follows. Apart from that, and if needed, a buttonhole can be cut independently of set up program – see chapter **E 3**.

Press the button ❶ on the main screen of the round buttonhole. The round buttonhole cutting screen comes up.
Select one of the options:
Use this button ❷ for no cutting option.
Use this button ❸ for cutting before sewing (CB).
Use this button ❹ for cutting after sewing (CA).

Procedure:
Press the button ❺ and adjust the buttonhole cutting in the X axis within the range ± 1,5 mm..
Press the button ❻ and adjust the buttonhole cutting in the Y axis within the range ± 1,5 mm.
Press the button ❼ and set the period of time for the knife to stay in the cutting area within the range 0,0 - 0,4 s.

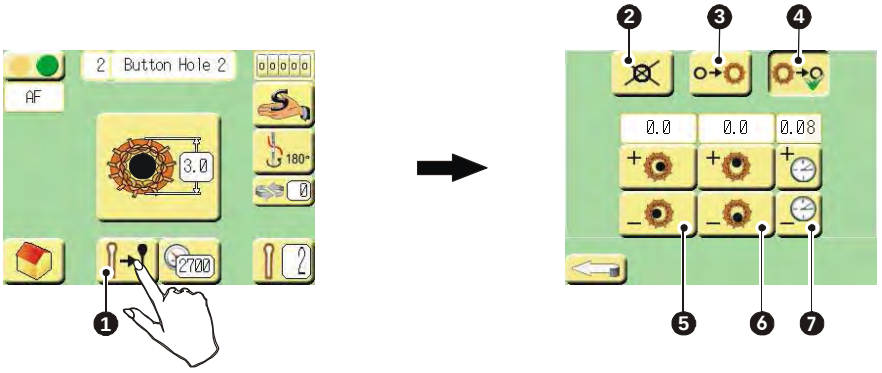

2.6. ULTRAFLEX

Ultraflex system enables the operator to set up 3 different types of cutting without a change of the cutting block.
There is an icon on the main screen confirming the Ultraflex model being active. If the icon is not illuminated and you wish to activate the Ultraflex model, follow the instructions in chapter **E 2.6.2.**
There is a password needed for the model set up screen – see chapter **E 2.2.**

Procedure:
Press the button ❶ on the main screen. The screen with buttonhole cutting parameters comes up.
Press the button ❷ to select the Ultraflex cutting option. The screen with Ultraflex cutting parameters comes up.
Use these buttons ❸ to select the cutting option. The current cutting shape is shown by the icon ❹.
The button  is used to come back to the main screen.

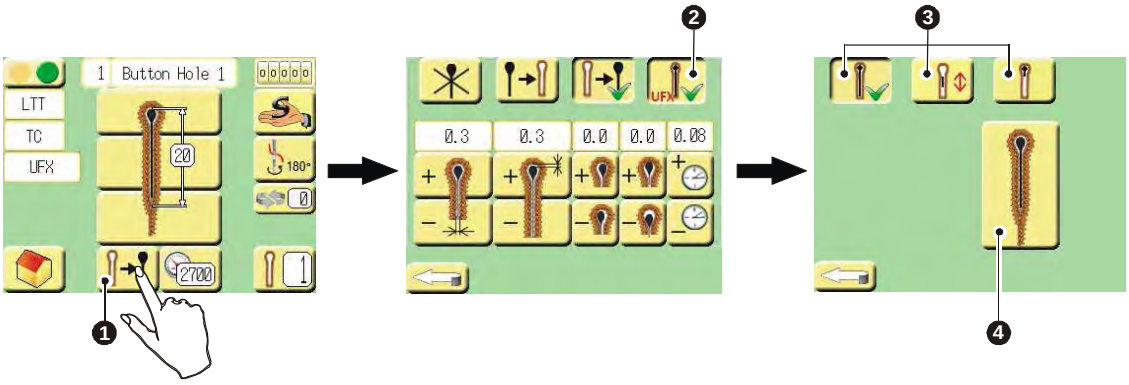

Cutting types:

2.6.1. Cutting the whole buttonhole

Press the button ❺ on the Ultraflex cutting parameters screen. Ticking this option means that the whole buttonhole will be cut. The current cutting shape is shown by the icon ❻.
The length of cut changes as needed depending on the setup of the buttonhole length. This is possible with the automatic sliding cutting block.

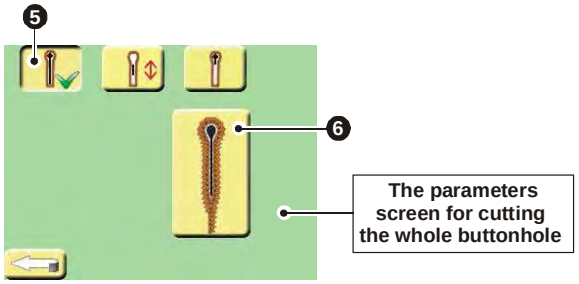

Released 04/2012
E-mail: service@amfreece.cz; parts@amfreece.cz; website: www.amfreece.com
Phone: +420 582 309 286; Fax: +420 582 360 606

2.6.2. Cutting the straight part of the buttonhole

Press the button ❼ on the parameters screen for Ultraflex cutting. Cut length and position screen comes up.
Press the button ❽ set the cutting length within the range 8 - 25 mm.
Press the button ❾ and set the cutting distance from the bar within the range 8 - 22 mm.
The current cutting shape and cutting position is shown by the icon ❿.

Note: Maximal values of set parameters depend on buttonhole length setup.

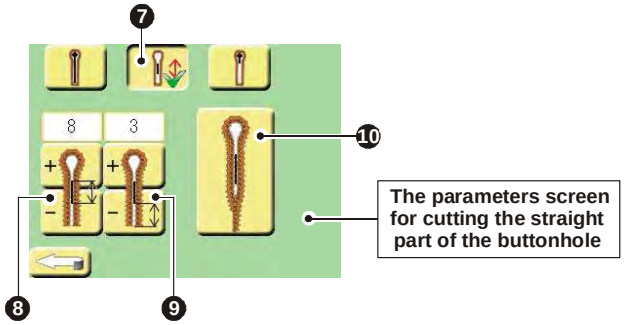

2.6.3. Cutting the eye or part of buttonhole with the eye

This option enables cutting only the eye or the part of buttonhole with eye. Press the button ❿ and activates the cutting.
Press the button ⓫ and set up the cutting length within the range of 5 - 30 mm.
The current cutting shape is shown by the icon ⓭.

Note: Minimal value depends on the eye type selected, maximal value depends on the buttonhole length setup.

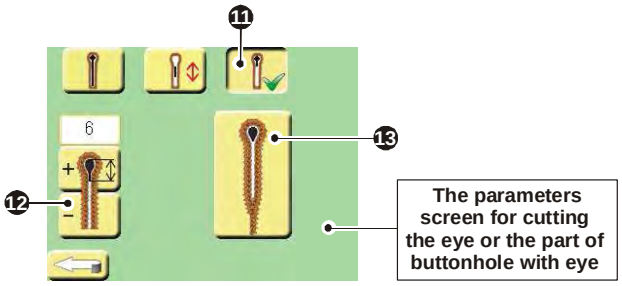

2.7. SETTING UP BUTTONHOLE SEWING SPEED

Sewing speed can be set up within 1000 - 2700 revolutions per minute. Each part of a buttonhole can be sewn at different speed.

1 stitch = 2 pricks = 2 revolutions.

Press the button ❶ on the main screen. Sewing speed screen comes up.
Press the button ❷ and set the number of stitches at the beginning of sewing, that are sewn at the low speed (from 0 to 9 stitches at 1000 rt/min).
Press the buttono ❸ and set the number of stitches at the end of sewing, that are sewn at the low speed (from 0 to 9 stitches at 1000 rt/min).
Press the button ❹ and set the sewing speed in the first and second raw of stitches within the range from 1000 to 2700 rt/min.
Press the button ❺ and set the speed in the eye within the range 1000 to 2700 rt/min.
Press the button ❻ and set the sewing speed for cross bar, if such ending is selected (see chapter **D 2.5.3.**), within the range 1000 to 2000 rt/min.

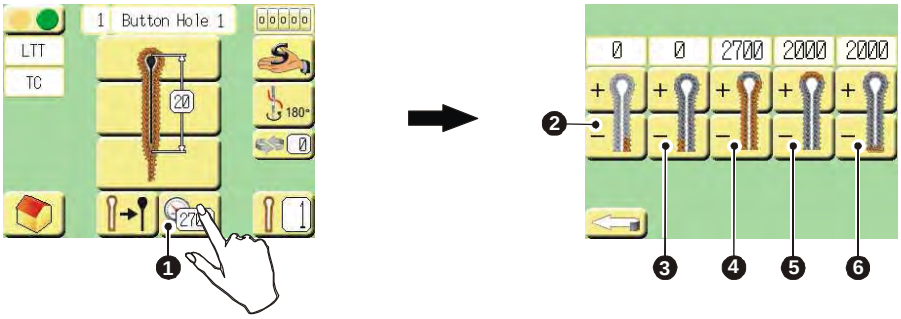

2.8. SETTING UP ROUND END BUTTONHOLE SEWING SPEED (RDE)

Sewing speed can be set up within 1000 - 2700 revolutions per minute. Each part of a buttonhole can be sewn at different speed.

1 stitch = 2 pricks = 2 revolutions.

Press the button ❶ on the main screen. Sewing speed screen comes up.
Press the button ❷ and set the number of stitches at the beginning of sewing, that are sewn at the low speed (from 0 to 9 stitches at 1000 rt/min).
Press the button ❸ and set the number of stitches at the end of sewing, that are sewn at the low speed (from 0 to 9 stitches at 1000 rt/min).
Press the button ❹ and set the sewing speed for round end buttonhole within 1000 to 2700 rt/min.

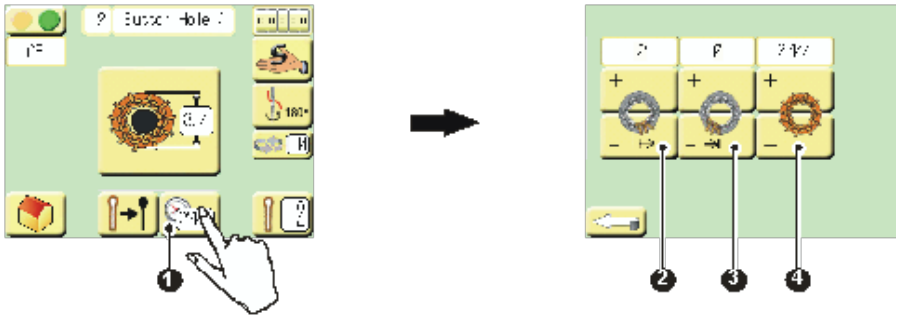

Released 04/2012
E-mail: service@amfreece.cz; parts@amfreece.cz; website: www.amfreece.com
Phone: +420 582 309 286; Fax: +420 582 360 606

D - MACHINE CONTROLS

3. CYCLE MODE

Cycling is to be used for sewing different types and different number of buttonholes in one sewing cycle that repeats.
Cycle mode can save up to 47 different cycle programs. One cycling program can keep a combination of up to 21 different buttonhole programs.

3.1. SELECTION OF PROGRAM NUMBER IN STANDARD CYCLE MODE

Press the button ❶ on the main screen. Cycle mode screen comes up.
Press the button ❷. Numeric keyboard comes up. Select a number of cycle program from 1 to 47. Selected cycle program number ❹ comes up in the top part of the screen. Confirm your choice with the button ❸. It also brings you back to the previous screen. Iven here the ❹ symbol shows the number of the cycle program as on the main screen. Press the button  to move back to the main screen.
If number 0 is selected, cycle mode is switch off.
The number of buttonhole being sewn is marked with ❺.
This button ❻ is used to shift individual positions of buttonhole programs within the cycle mode.

Use this button  whenever you need to move back to the main screen.

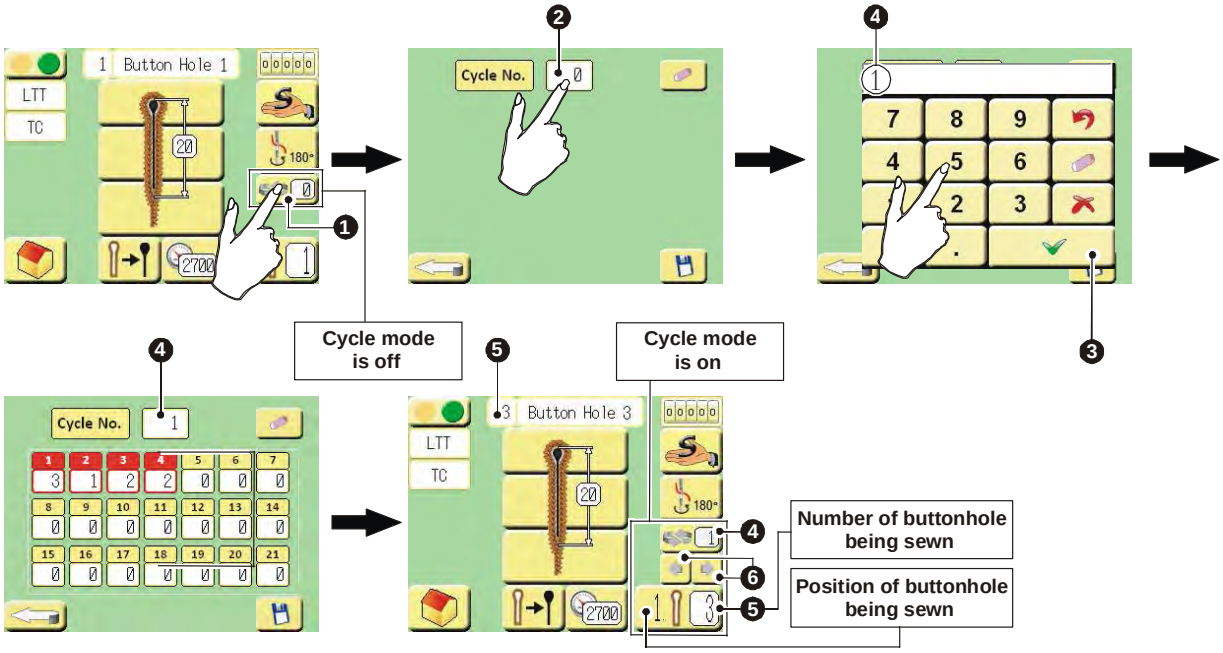

Note:
On/Off cycle mode is indicated on the right part of the main screen:



3.2. BUTTONHOLE PROGRAM SELECTION IN CYCLE MODE

It is possible to chose individual buttonhole programs under position 1-21 ❶ in one cycle program.
Note:
Cycle program is able to work with pre-set buttonhole programs only. For detailed instructions on their programming see chapters **E 2.1.** a **• 2.9.**

Postup:
Press the button ❷. Numeric keyboard comes up.
Select a required buttonhole program sewn at the position „1“. Selected program number is seen in the top part of the numeric keyboard ❸.
Press the button ❹ to save settings and come back the previous screen.
Proceed the same way to select buttonhole programs at the subsequent positions, that are to be sewn one after another in one cycle program. Save the pre-set cycle mode pressing the button ❺.
To delete all pre-set and saved buttonholes of a certain cycle program, press ❼.
First zero “0” signals the end of cycle program ❻.

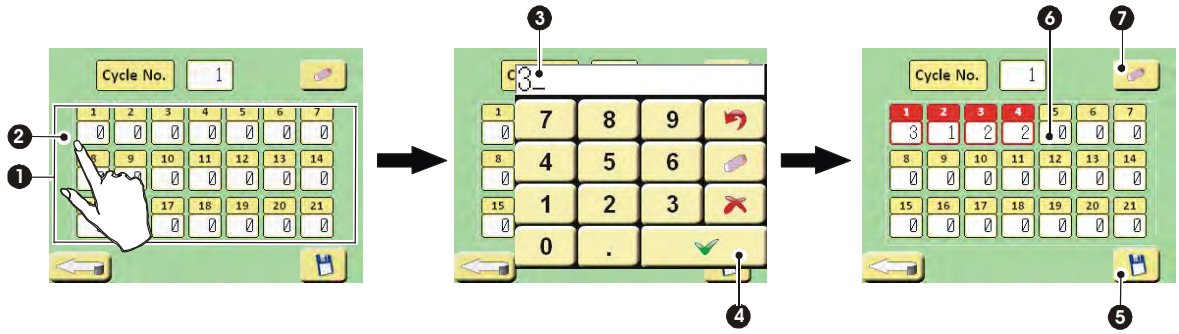

Released 04/2012
E-mail: service@amfreece.cz; parts@amfreece.cz; website: www.amfreece.com
Phone: +420 582 309 286; Fax: +420 582 360 606

D - MACHINE CONTROLS

3.3. SETTING CYCLE MODE WITH ACTIVE OPTICAL SENSOR

Optical sensor is used to automates the sewing cycle during production of women and men's jackets. The aim of the device is to recognize the type of buttonhole that is to be sewn and make the work of the operator easier. Using the optical sensor reduces errors during work process.

Number „0" on this button ❶ on the main screen stands for the cycle mode being off. The icon ❷ UFX OPTO shows the Ultraflex model and optical sensor being active.
To set cycle mode with active optical sensor follow the instructions:

Press the button ❶. The cycle mode screen comes up.
Press the button ❸. The numeric keyboard comes up.
Set the cycle program number on the numeric key board within no 1 - 47 - see ❹.
Press the button ❺ to confirm the selected program number and go back to the cycle screen.
Press the button ❻. On the numeric keyboard select the buttonhole number ❼ to be sewn (range 1 - 99).
Press the button ❽ to confirm your selection and to go back to the cycle mode screen.
Press the button ❾ to save your settings and to go back to the main screen.
First zero "0" signals the end of cycle program ❿.

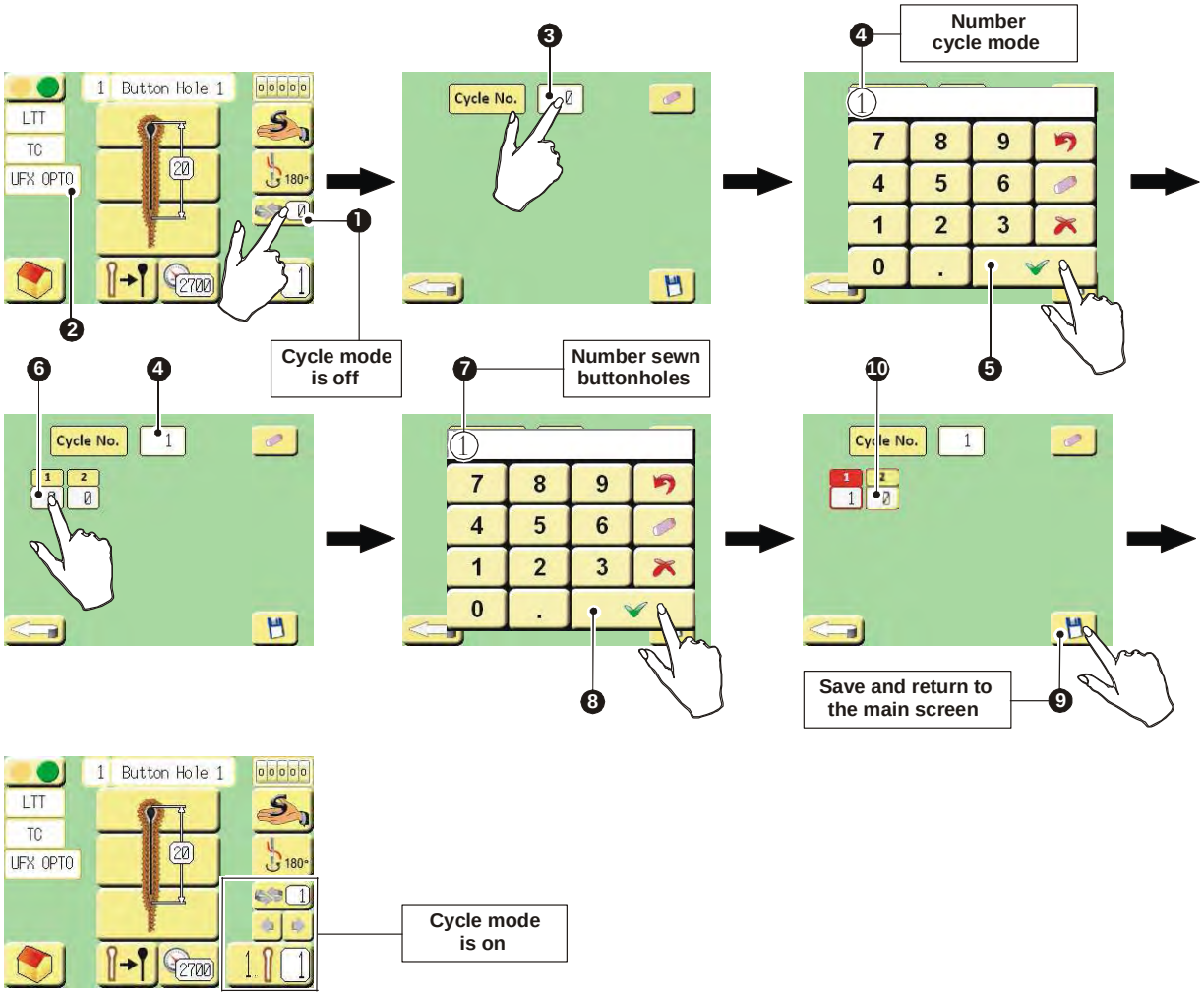

Example of usage:

You wish to sew 2 buttonholes only: no. 1 (button hole) and no. 2 (lapel hole).

If sensor not active UFX OPTO, buttonhole no

1 (button hole) is sewn, if sensor is active UFX OPTO, buttonhole no 2 (lapel hole) is sewn.

Activation or deactivation of the optical sensor is shown on the main screen by the change of the field **UFX OPTO** see picture 1:



Change of the buttonhole type is shown on the display once the foot pedal is pressed down – see picture. 2:

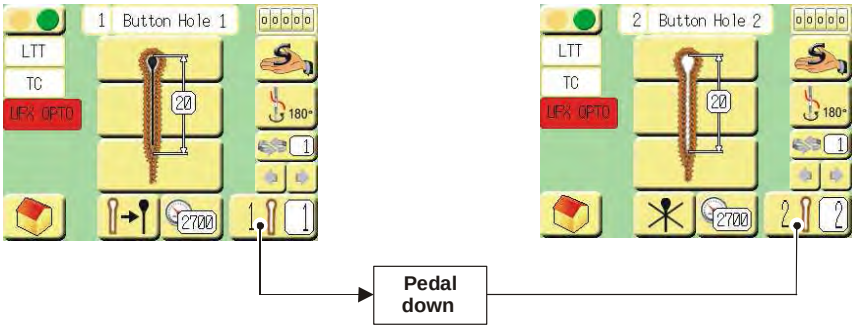

Released 04/2012
E-mail: service@amfreece.cz; parts@amfreece.cz; website: www.amfreece.com
Phone: +420 582 309 286; Fax: +420 582 360 606

D - MACHINE CONTROLS

4. ADITIONAL FUNCTIONS

4.1. PRODUCTIVITY (CYCLE COUNTER)

Machine productivity, it is number of sewn cycles, can be monitored by two types of counters.

- Daily counter monitors a certain batch or series of sewn cycles per shift, for example. It can be set within 0 to 30 000 cycles.
- Total number of sewn cycles on the counter is just informative. It counts all cycles done on the machine and provides information about its wear off. This type of counter cannot be edited.

4.1.1. SETTING DAYILY CYCLE COUNTER

Procedure:

Press the button ❶ on the main green. Productivity screen comes up.

Press the button ❷, to delete the daily counter digit.

Press the button ❸. Numeric keyboard comes up. Set a number of cycles from 0 to 30 000. Required number of cycles comes up in the top part of the numeric keyboard screen ❹.

Press the button ❺ to save the setup and to come back to the productivity screen.

Press the button ❻ and choose the daily counter to count in ascending  or descending .

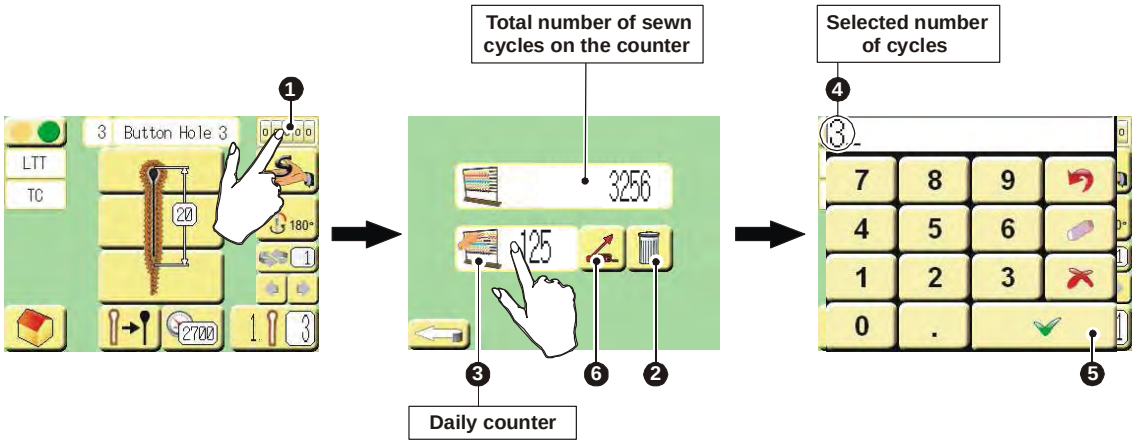

4.2. ERROR MESSAGES

If there is a problem in the machine, the main screen shows an error message  - ❶.

Press the button ❶. Error message screen lights up. Found problem is indicated with a number, error is briefly described, and solution is suggested. Complete list of error messages with more detailed description with remedies can be found in separate section **2 - Troubleshooting** of this manual.

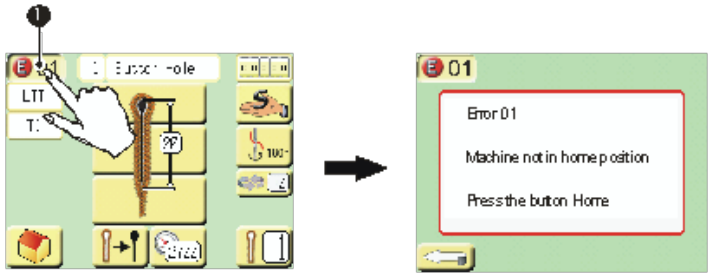

4.3. DISCHARGED BATTERY

If the battery in the display or the PLC is flat, it is shown by this flashing icon ❶ on the main screen. Press the button ❶. To see the current state of the battery ❷. If it shows this icon ❸, it is necessary to check the connection of the battery, or replace it with a new one. The battery has to be replaced within 4 days, otherwise data will get lost. To replace the battery follow the chapter **F 1.2.5.**

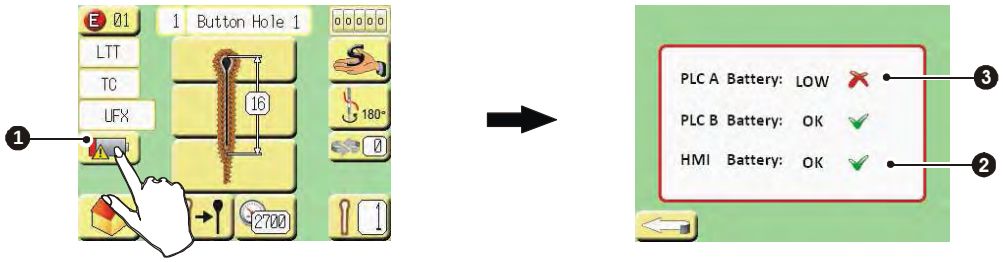

Released 04/2012
E-mail: service@amfreece.cz; parts@amfreece.cz; website: www.amfreece.com
Phone: +420 582 309 286; Fax: +420 582 360 606

E - STANDARD MACHINE ADJUSTMENT

1. STANDARD BUTTONHOLE SHAPES SET BY MANUFACTURER

Programs **95 - 99** are pre programmed by the manufacturer - see table (program). For their usage see chapter **D 2.1.**

SCREEN	PARAMETERS		PRE-SET PROGRAM				
	Program number		**95**	**96**	**97**	**98**	**99**
	Eye						
	Program name		No Bar test	Fly Bar test	Cross Bar test	Round1 test	Jeans test
D 2.3.1. Eye parameter setup	Eye size	(mm)	2,8 x 4,2	2,8 x 4,2	2,8 x 4,2	2,8 x 4,2	2,8 x 4,2
	Number of stitches in eye		8	8	8	8	8
	Eye flattening or stretching	(mm)	1	1	1	1	1
	Angle buttonhole vertical axis		0	0	0	0	0
	Stitch tilt in eye	(%)	50	50	50	50	50
D 2.3.3. 1st and 2nd raw of stitches setup	Buttonhole lenght	(mm)	20	20	20	20	20
	Stitch density	(mm)	1	1	1	1	1
	Bite	(mm)	0	0	0	0	0
	1st and 2nd stitch raw straighteing	(mm)	0	0	0	0	0
	1st and 2nd stitch raw feeding	(%)	50	50	50	50	50
	Y axis shift	(mm)	0	0	0	0	0
D 2.3.4. Buttonhole end setup	Number of stitches added or removed at the end of 2nd raw		0	-	-	-	-
	Lengh of oversewing	(mm)	-	7	-	-	7
	Side shift stitch raw size	(mm)	-	1,5	-	-	1,5
	Number of stitches at the end of 2nd raw added or removed before fly bar		-	0	-	-	0
	Number of stitches at the end of 2nd raw added or removed in fly bar		-	0	-	-	0
	Cross bar length	(mm)	-	-	4	-	-
	Stitch density	(mm)	-	-	0,8	-	-
	Position adjustment in X axis	(mm)	-	-	0	-	-
	Stitch width	(mm)	-	-	0	-	-
	Position adjustment in Y axis	(mm)	-	-	0	-	-
	Cross bar angle turning	(°)	-	-	0	-	-
	Number of stitches in bar		-	-	-	6	-
	Number of overlaping stitches		-	-	-	2	-
D 2.4. Cutting setup	Distance between 1st and 2nd stitch raw	(mm)	0,3	0,3	0,3	0,3	0,7
	Stitch distance from cut to inner eye stitch	(mm)	0,3	0,3	0,3	0,3	0,7
	Adjustment of buttonhole cut in X axis	(mm)	0	0	0	0	0
	Adjustment of buttonhole cut in Y axis	(mm)	0	0	0	0	0
	Cutting time delay	(s)	0,08	0,08	0,08	0,08	0,08
D 2.7. Sewing speed setup	Number of stitches at the beginning sewn slowly		0	0	0	0	0
	Number of stitches at the end sewn slowly		0	0	0	0	0
	Sewing speed setup	(szm)	2200	2200	2200	2200	2200
	Sewing speed in eye setup	(szm)	2200	2200	2200	2200	2200
	Sewing speed in cross bar setup	(szm)	-	-	2200	-	-

E - STANDARD MACHINE ADJUSTMENT

WARNING!
- *Switch off the main switch for any adjustment.*
- *Unskilled operations may damage electronic devices and machine mechanisms.*
- *With each program number change make sure that the required buttonhole shape is selected.*

CAUTION!
- *Always follow valid safety instructions at the workplace.*
- *For operations during which sewing is not adjusted, it is recommended to take needle out.*

2. SERVICE MENU DISPLAY

Service menu display is to be used for advanced adjustment and sewing mechanism testing. Only a skilled service mechanic may operate it. Due to safety reasons the service menu is divided into several levels according to required specialty and frequency of usage. Each level is sequred with a password, see chapter **E2.2.**

CAUTION !
An unskilled service mechanic can cause a serious damage to the machine or can get hurt, damaged parts may not be covered by the guarantee.

Note:
Instructions how to operate the service menu always starts on the main service screen. See chapter **D1.1.** for main service screen guide.

2.1.SERVICE MENU DISPLAY GUIDE

The guide provides a quick look in the service menu display. It shows all functional buttons of the main service screen and current screens with instructions for parameters being set up. The last column “Chapter” provides a reference to individual chapters with details of operation steps.

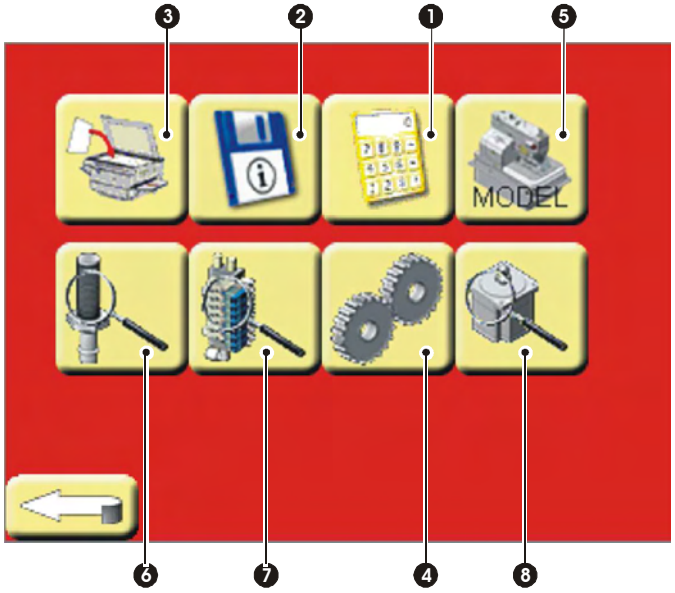

E - STANDARD MACHINE ADJUSTMENT

Icon	Current screen	Screen name	Set parameters	Chapter
❶ 		Numeric keyboard	Setting numeric values such as buttonhole program number, password etc.	**E2.2**
❷ 		Information screen		**E2.3**
❸ 	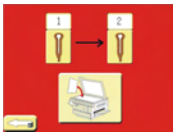	Program copy screen	Copying of buttonhole programs	**E2.4**
❹ 		Basic parameter screen	Language selection Right pedal activation Bedplate setting Correction of number in cross bar Joging Activation of gimp thread tension	**E2.5**
❺ 	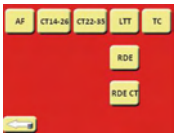 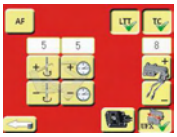	Machine model and accessories parameter	Setting standard machine models and its accessories Setting parameters of selected model Setting Ultraflex model and this accessories Setting parameters of selected model	**E2.6.1** **E2.6.2**
❻ 		Sensor test screen	Testing all sensors, icons, pedals, switching devices and motors functions	**E2.7**
❼ 		Valve test screen	Testing all sensors functions	**E2.8**
❽ 		Sewing Motors test screen	Servo drive and step motors testing Servo drive and step motors activation	**E2.9**

2.2. PASSWORD LOGIN

Service menu display is protected with passwords against unskilled parameters handling and is divided into three levels in terms of demands and setting frequency.

Instructions:
Press the button ❶ on the main service screen. Numeric keyboard comes up
Enter number code for actual level, see chapter **E 2.2.1.**
Confirm with button **❷.**

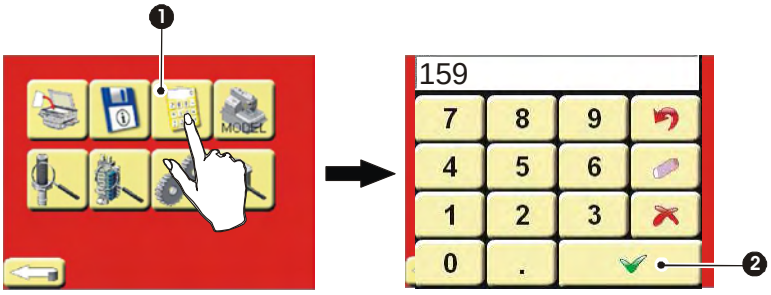

2.2.1. PASSWORDS AND PROTECTING LEVELS

Screens below clearly show which service menu functional buttons are protected with a password and which protection level they belong to.

Note:
Password log in automatically activates all buttons of the concrete level and all buttons of lower levels. It means that using password for level III also activates level I and II.

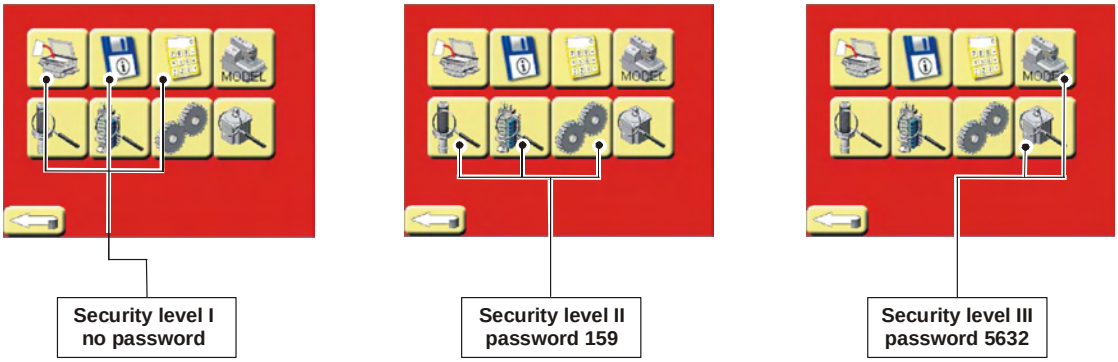

2.3.INFORMATIVE SCREEN

Informative screen provides information on firmware version and manufacturer contact details.Pressing the button ❶ in the main service screen gives you access to the informative screen.

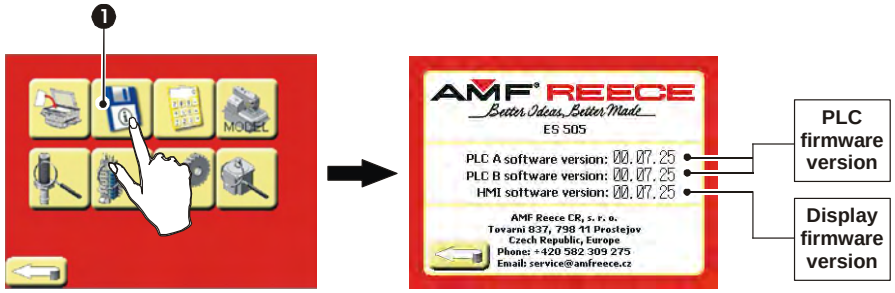

E - STANDARD MACHINE ADJUSTMENT

2.4. BUTTONHOLE PROGRAM COPYING

Copy screen enables copying quickly and easily parameters of chosen button program under a new program number.

Instructions:

Press the button ❶ on the main screen. Copy screen comes up. Press the button ❷ and numeric keyboard comes up. Choose a program number that you like to copy. Save your setting by pressing the button ❸. Press the button ❹. Numeric keyboard comes up. Chose a program number into which you like to copy chosen program. Save your setting by pressing the button ❺. Press the button ❻ and copy the chosen program.

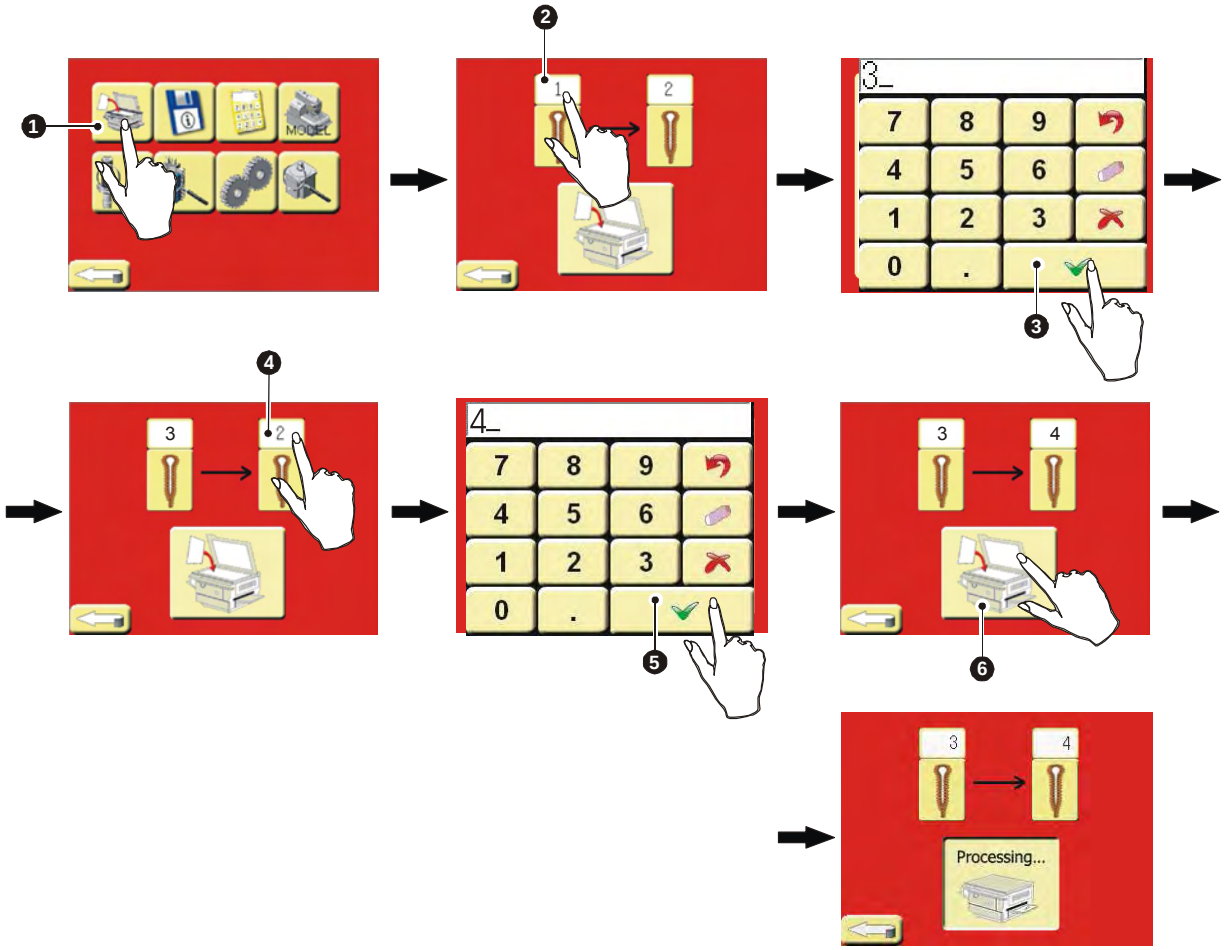

2.5. MACHINE SETTING

Machine parameters setting screen gives access to select language, activate pedal function and sewing. Pressing the button ❶. in the main screen brings you to the main parameters screen. Parameters setting screen fall under the protection level II and is protected by a password; see chapter **E 2.2.**

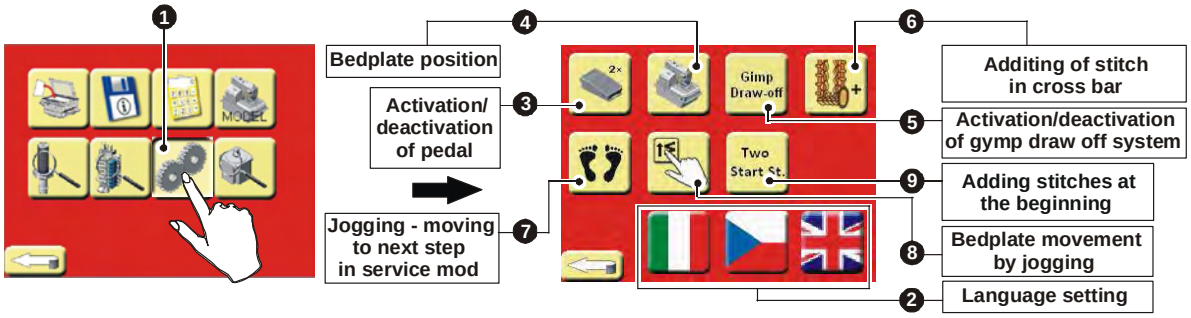

❷ Language selection

Pressing one of the buttons in ❷ selects display language, used especially in the error message screen. It is possible to chose English or Czech language.

❸ Table position setting

Pressing the button ❸ activates the bedplate move forward for easy handling of the workpiece: . If the table the image displays: , the function is off.

❹ Start of sewing

Press the button ❹ to activate / deactivate right pedal. If the right pedal is active, the display shows  and the machine functions are operated by the left and right pedal. Stepping on the left pedal activates feet and the workpiece is clamped and stretched. Stepping on the right foot pedal activates the sewing cycle. If the right pedal is deactivated, the display shows  and the whole sewing cycle is activated by pressing on the left pedal.

❺ Activation of gimp tension

Pressing the button ❺ activates gimp draw off only CT models. Gimp draw off is done automatic for LTT model. AF model doesn´t draw-off gimp thread.

❻ Adding stitches in cross bar

Pressing the button ❻ can add two stitches at the beginning of cross bar sewing.

❼ Stepping

Stepping function enables to track the whole process of buttonhole sewing step by step and check all setup parameters. Activation of this function is shown by the icon . In some cases it is necessary to use the stepping function for correct setup of sewing parameters; to put the machine into a certain phase or sewing operation see chapter **E 11.1.**

Starting sewing cycle depends on the parameter ❸. If the left pedal is only active, you will operate individual steps with the left pedal . If both pedals are active, take the following steps: depress the left pedal to lower the clamp feet. Then depress the right pedal to move the bedplate forward. Use the left pedal to operate the stepping. To deactivate stepping in any moment of the sewing cycle, depress the stepping button ❼ again.

Note: While the stepping function is active, the electronic servo-driver position hold is deactivated and can be turned manually.

❽ Slight bedplate movements while stepping
This function enables to move the bedplate as if a buttonhole is being sewn. The servo-driver is not on, and it is blocked electronically (the hand wheel cannot turn). The function is active if the button ❽  is pressed.
Once the button is pressed, the bedplate moves onto another stitch. The function is deactivated with the **STOP emergency** button.
Starting sewing sequence depends on the parameter ❹. If the left pedal is only active, depress the left pedal. If the right pedal is active as well – see – picture/detail ❹ Depress both pedals. The bedplate moves once the button ❽ is pressed.

Note: If you wish to move the hand wheel, first you need to activate stepping , mode then start sequence and then move the bedplate by pushing the button .

❾ Additing/removing eye start stitches
Press the button ❾ to add or remove two stitches at the beginning of sewing.

2.6. SELECTION OF MODEL AND MACHINE ACCESSORIES

2.6.1. SELECTION OF STANDARD MODEL AND MACHINE ACCESSORIES

This screen enables to select a machine model and its accessories. Pressing the button ❶ on the main service screen enters the screen of model selection and machine accessories. The screen falls under the protection level III and is protected by a password; see chapter **E 2.2.1.**
Pressing buttons ❷, ❸, ❹, ❺, ❻, ❼ and ❽ enables to select a required machine accessories and model.

> ⚠ ***CAUTION !*** *When changing machine accessories it is necessary to make the change in the machine software by selecting accessories. Otherwise the machine can get damaged!!!*

❷ Model AF – automatic upper thread trimming
❸ Model CT 14 - 26 – model with automatic trimming of all threads, short tail of all threads for buttonholes in the range 14 mm – 26 mm
❹ Model CT 22-35 – model with automatic trimming of all threads, short tail of all threads for buttonholes in the range 22 mm – 35 mm
❺ Model LTT – model trimming all threads, long tail of all threads
❻ Model RDE – roun buttonhole
❼ Model RDE CT – round buttonhole with automatic trimming of all threads, bottom thread short tail
❽ Thread catcher on/off

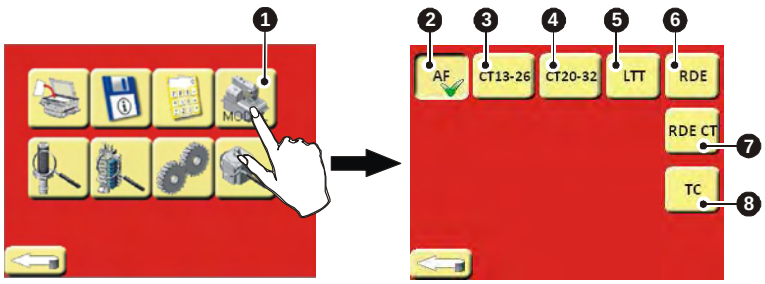

E - STANDARD MACHINE ADJUSTMENT

Setting up models ❸ (CT 14-26), ❹ (CT 22-35) nebo ❼ (RDE CT - round buttonhole) it is possible to change these parameters:

❾ Length of trimmed tails (range 3– 50 mm)
❿ Time from clamp feet lift-up to thread trimming (range 0-150 ms)
⓫ Time from trimming to clamp feet lowering (range 0 -100 ms)

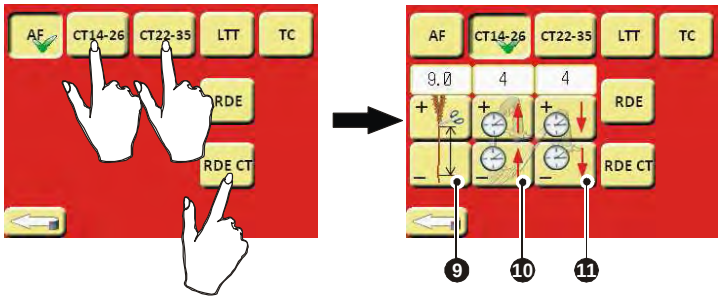

Setting up LTT model ❺ - it is possible to change these parameters:

⓬ Adjustment of R axis in the moment of thread trimming (range ± 5 degrees)
⓭ Time between clamp feet lift-up and tread trimming (range 0 – 100ms)

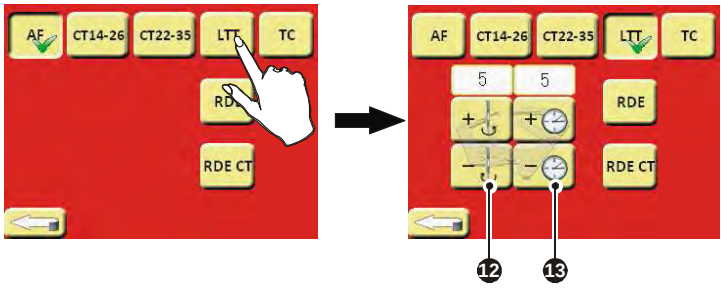

Released 04/2012
E-mail: service@amfreece.cz; parts@amfreece.cz; website: www.amfreece.com
Phone: +420 582 309 286; Fax: +420 582 360 606

E - STANDARD MACHINE ADJUSTMENT

2.6.2. ULTRAFLEX MODEL

Follow instructions below to activate Ultraflex model from the main screen. The model screen falls under the protection level **III**.

In case that the Ultraflex model is not being active on the main screen – see icon ❶, press button ❷ to get in the service menu screen.
Press the button ❸ and password of the protecting level **III** - ❹.
Press the button ❺ to come back to the service menu screen.
Pressing the button ❻. Brings you to model and machine accessories screen.
Press the button ❼ to activate Ultraflex model. Use the buttons ❽ and ❾ to come back to the main screen with active icon ❿ - model Ultraflex UFX.

For service settings instructions see chapters **E 2.4. - E 2.6.**

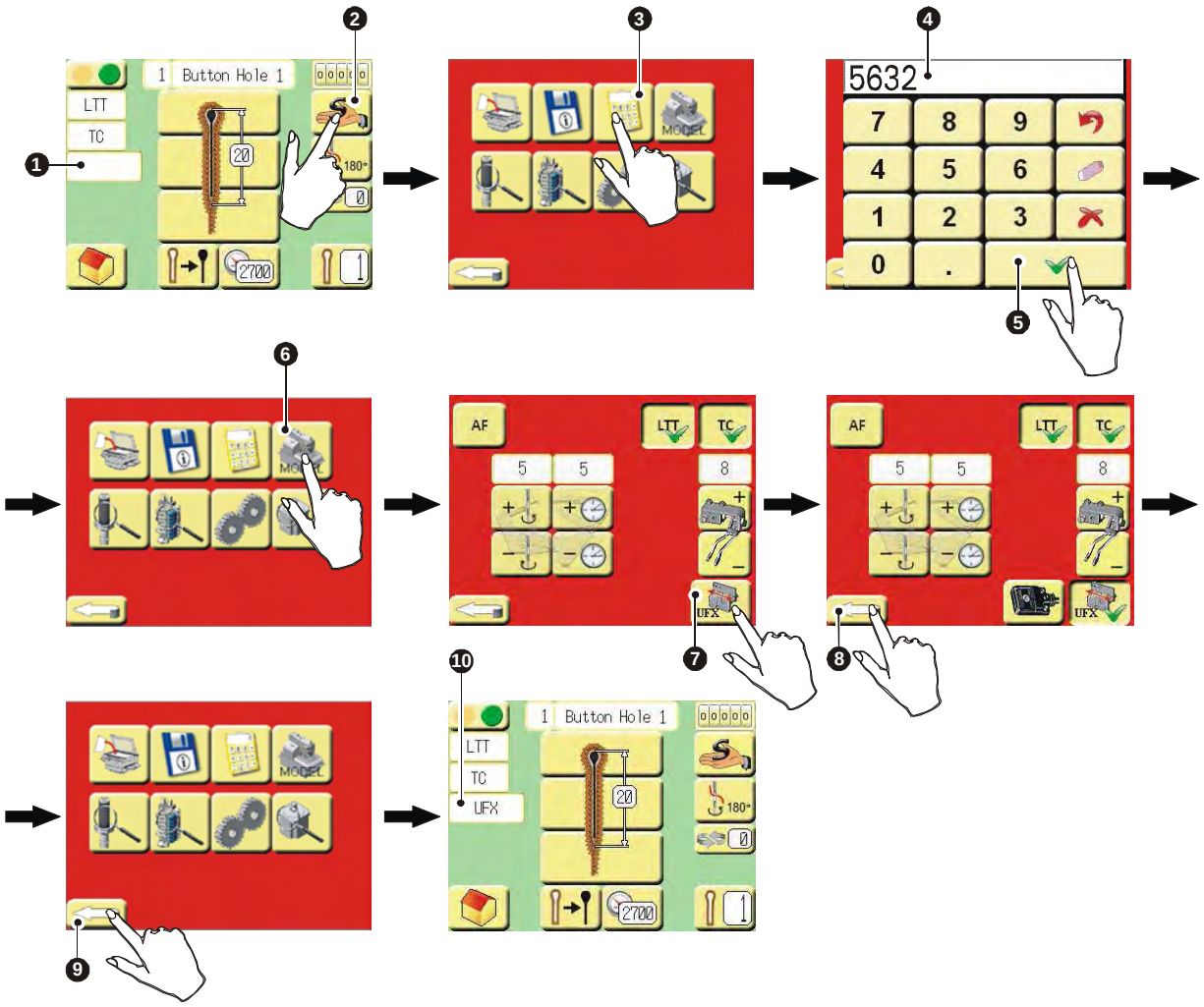

2.6.3. SELECTION OF OPTICAL SENZOR FOR ULTRAFLEX MODEL

In case of Ultraflex model is active – see icon ❶ on the main screen, you can add a function of optical sensor. Follow the instructions to activate the sensor from the main screen. The screen falls under the protection level **III**.

Press the button ❷ to get to service menu screen.
Once you press the button ❸ password of the protective level III. - see ❹.
Use the button ❺ to come back to service menu screen
Use the button ❻ to get to model and machine accessories screen, with active Ultraflex model - see icon ❼.
Use the button ❽ to start the optical sensor.
Press the button ❾ to get back to the service screen. Then press ❿ to come back to the main screen with active icon ⓫ - UFX OPTO .

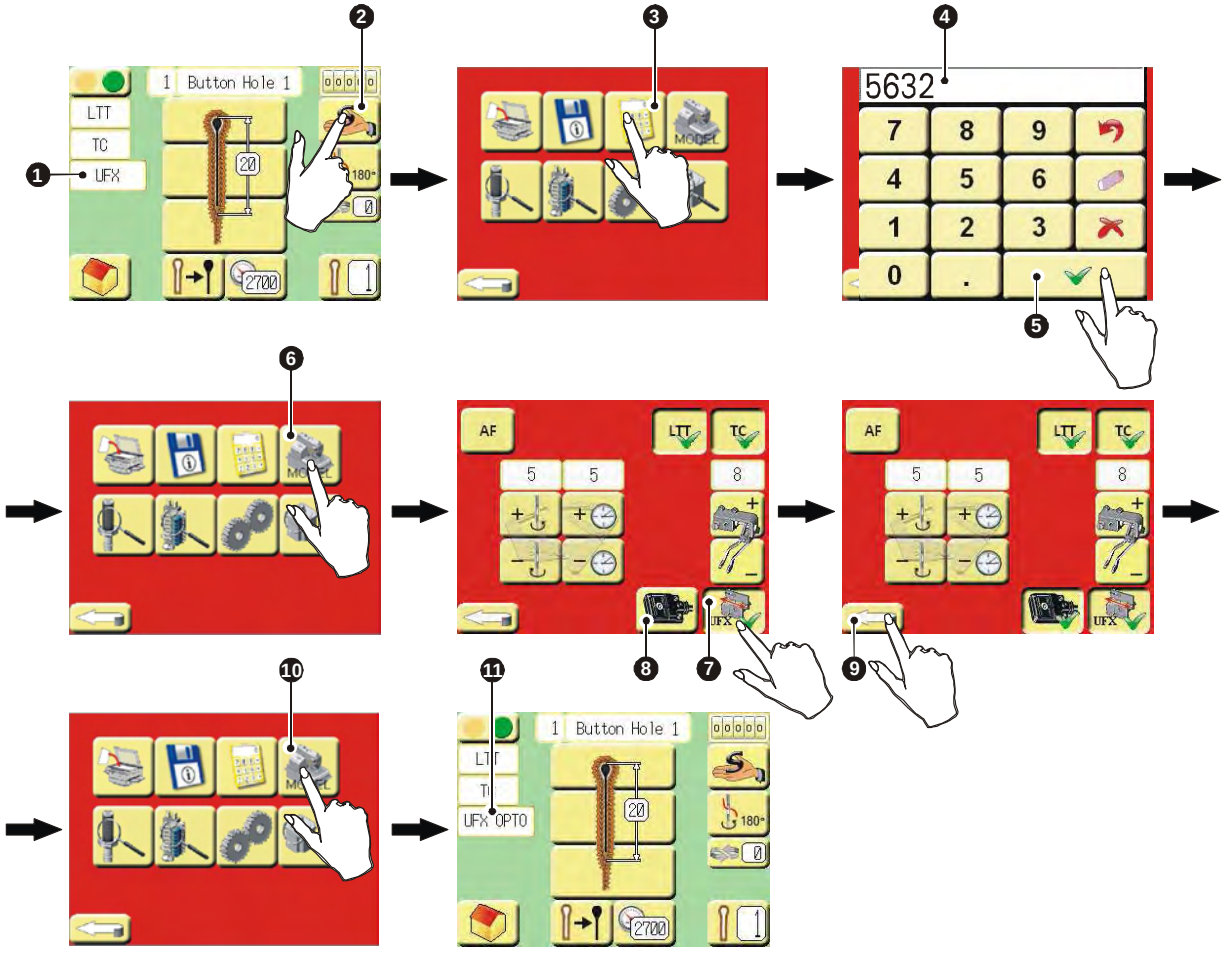

Released 04/2012
E-mail: service@amfreece.cz; parts@amfreece.cz; website: www.amfreece.com
Phone: +420 582 309 286; Fax: +420 582 360 606

E - STANDARD MACHINE ADJUSTMENT

2.7. INPUT TESTING

Input testing screen enables to check functions of machine sensors, buttons, pedals, switches and motors. Press the button ❶ on the main service screen to enter the input testing screen, which belongs to protection level II and is protected by a password – see chapter **E 2.2.1.**

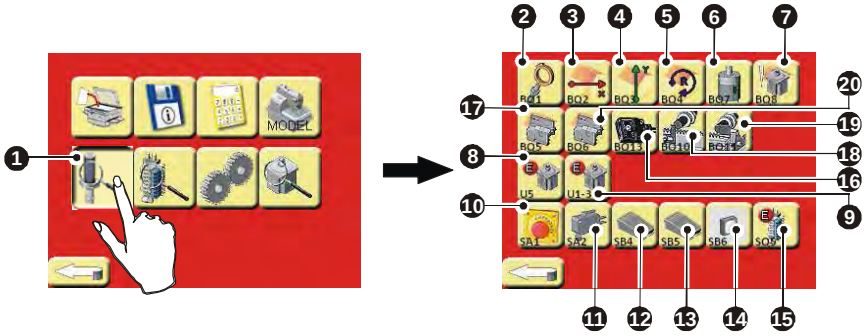

❷ BQ1 - Synchronization sensor
❸ BQ2 - Basic position of X axis
❹ BQ3 - Basic position of Y axis
❺ BQ4 - Basic position of R axis
❻ BQ7 - Cutting sensor
❼ BQ8 - Basic position of servo drive – Upper position
❽ U5 - Servo drive error
❾ U1-3 - Stepper motor U1-U3 error
❿ SA1 - Emergency stop
⓫ SA2 - Sensor detecting machine cover open
⓬ SB4 - Left pedal
⓭ SB5 - Right pedal
⓮ SB6 - Cutting button
⓯ SQ5 - Low air pressure
⓰ BQ13 - Optical sensor (at Ultraflex model only)
⓱ BQ5 - Main home position of sliding cutting steel (at Ultraflex model only)
⓲ BQ10 - Home position of indexer when sewing from the left (at indexer model only)
⓳ BQ11 - Home position of indexer when sewing from the right (at indexer model only)
⓴ BQ6 - Second position of sliding cutting steel

2.8. OUTPUT TESTING

Output testing screen enables to check functions of all valves including relevant sensors. Press the button ❶ on the main service screen to enter the output testing screen, which belongs to protection level **III** and is protected by a password – see chaptera **E 2.2.1.**

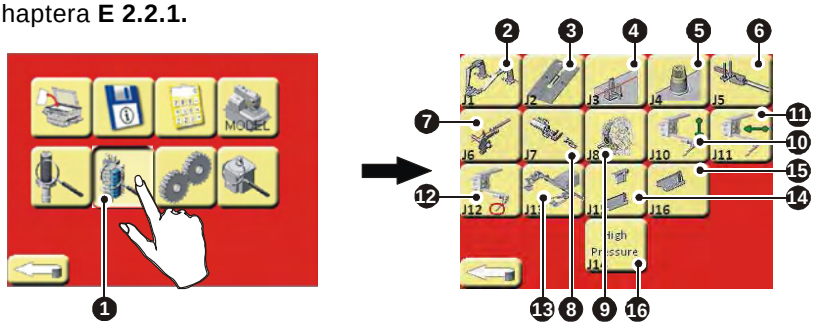

❷ J1 - Clamp feet
❸ J2 - Stretching work piece
❹ J3 - Top thread draw-off
❺ J4 - Top thread draw-off
❻ J5 - Bottom thread draw-off
❼ J6 - Gimp draw-off
❽ J7 - Bottom thread trimming
❾ J8 - Top thread trimming
❿ J10 - Thread catcher – vertical movement
⓫ J11 - Thread catcher – horizontal movement
⓬ J12 - Thread catcher – opening and closing clippers
⓭ J13 - Indexer clamp feet (at Indexer model only)
⓮ J15 - Cutting cylinder
⓯ J16 - Suction system
⓰ J14 - Half pressure switch (at Ultraflex model only)

2.9. MOTOR TESTING

Motor testing screen enables to test functions of servo drives and stepper motors. Press the button ❶ on the main service screen to enter the motor testing screen, which belong to protection level **III**.

Use these buttons ❷, ❸, ❹, ❺ and ❻ to test stepper motor movements in the drawn directions.
Pressing the button ❺ checks the sliding cutting steel play free movement (at Ultraflex model only).
Pressing the button ❻ checks the indexer movement (at indexer models only).
Pressing the button ❼ checks continuous rotation of the race around the R axis.
Pressing the button ❽ sets up the rotation speed of the race in R axis in the range of 2 - 310 rpm.
Pressing the button ❾ activates the servo drive.
Pressing the button ❿ rotates the servo drive of 45°.
Press the button ⓫ to chose continuous servo drive operation.
Press the button ⓬ to set up the servo drive rotation speed within the range 100 - 3000 rpm.

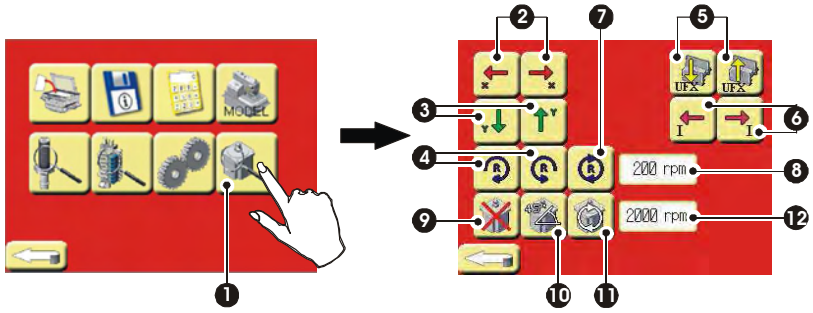

❷ Bed plate movement in X axis (1 mm)
❸ Bed plate movement in Y axis (1 mm)
❹ 45° rotation of race around R axis anti/ clockwise
❺ Sliding cutting steel movement (1 mm)
❻ Indexer movement
❼ Continuous race rotation around R axis
❽ Setting up speed of race rotation
❾ Servo drive activation
❿ Servo drive rotation of 45°
⓫ Continuous servo drive movement
⓬ Servo drive speed setup

Released 04/2012
E-mail: service@amfreece.cz; parts@amfreece.cz; website: www.amfreece.com
Phone: +420 582 309 286; Fax: +420 582 360 606

E - STANDARD MACHINE ADJUSTMENT

3. REPETED FABRIC CUT MODE

There is a button ❶, placed on the outside of the control box, that enables to activate cutting independently of the program. It can be used together with the left foot pedal pressed down in order to have the fabric clamped by the clamping feet and check the cut.

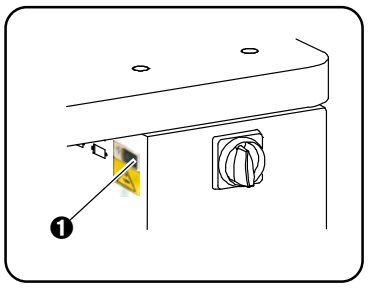

Place the fabric under the feet, depress the left foot pedal, hold it in that position and push the button ❶. The cutting lever cuts the fabric so many times, how many times you push the button ❶. Release the foot pedal.

4. SETTING UP PLC ACCORDING TO MACHINE TYPE

When PLC in the machine is replaced, it is necessary to set up the position of potentiometer according to machine type. Moving potentiometer changes the main screen according to the machine type.

MACHINE TYPE	SETTING	RANGE
AF, CT, LTT	00	00 - 3F
INDEXER	5F	40 - 7F
INDEXER + ULTRAFLEX	9F	80 - BF
ULTRAFLEX	FF	CO - FF

Use a cross-head screwdriver to set up the position (see pict. **A**, pict. **B** = detail).

Setting up the position is done in the machine control box on machine being switched on.

It is important to remember that this operation can be done only by an authorized person!

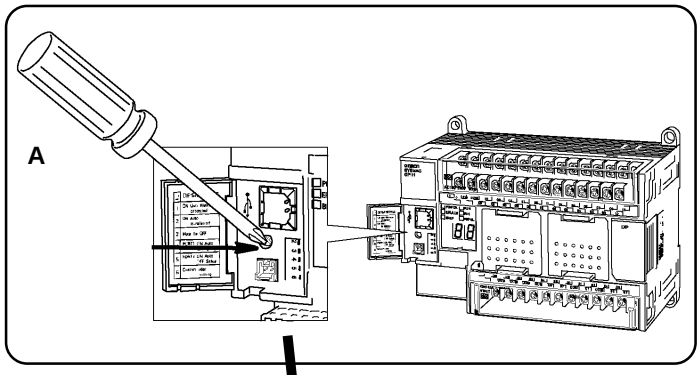

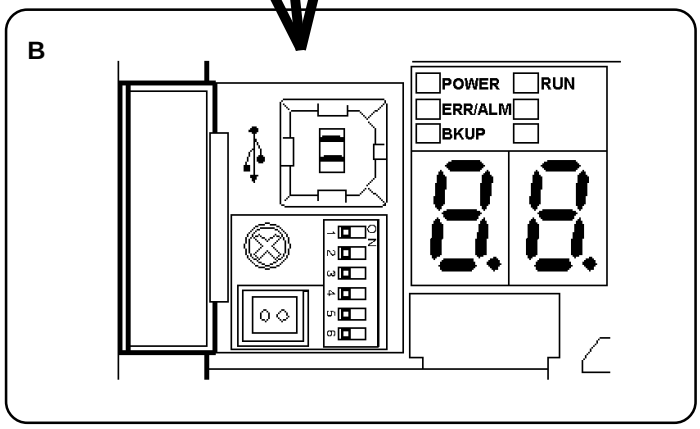

5. SETTING UP SEWING DRIVE SENSOR RINGS

For correct machine functioning, it is important to set sewing drive sewing mechanism right. Sensors are preset already from the manufacturer and they are market with yellow color.

BQ8 - Sensor watches the position of the needle bar when the machine stops.
BQ1 - Sensor watches feeding during sewing.

5.1. Setting up sensor screen BQ1

Loosen the screws ❶ and remove the back covert ❷ on the machine head.

Turn the hand wheel ❸ in the arrow direction until the needle bar reaches upper dead point.

Loosen the screw ❹ on the screen ❺ and move it so that the match mark on the screen is in the centre of the sensor ❻**.**

Check the play between the screen ❺ and the sensor ❻. The play must be within 0,2 - 0,3 mm (pic. **A**).

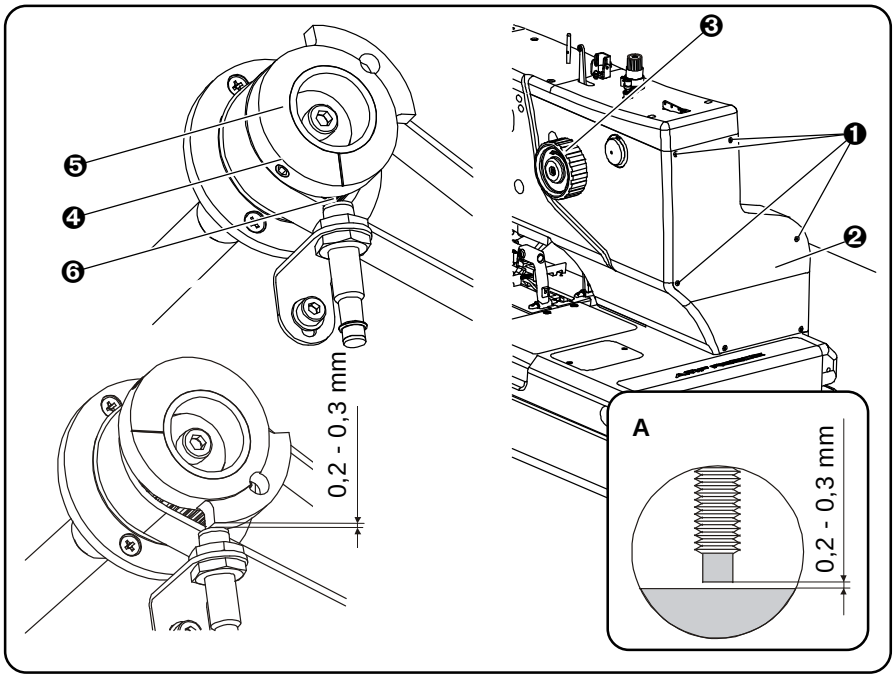

5.2. Setting up sensor screen BQ8

Pull out the locking bolt ❼ on the machine sewing head left side and tilt the head. The screen is placed in the rear bottom part of the head.

Turn the hand wheel ❸ in the arrow direction until the needle bar reaches upper dead point and the right looper is on the left.

Loosen the screw ❽ and turn the sensor ring ❾ clockwise so that the leading edge of the ring is above the edge of sensor ❿**.**

Check the play between screen ❾ and sensor ❿. It must be 0,2 - 0,3 mm (pic.**A**).

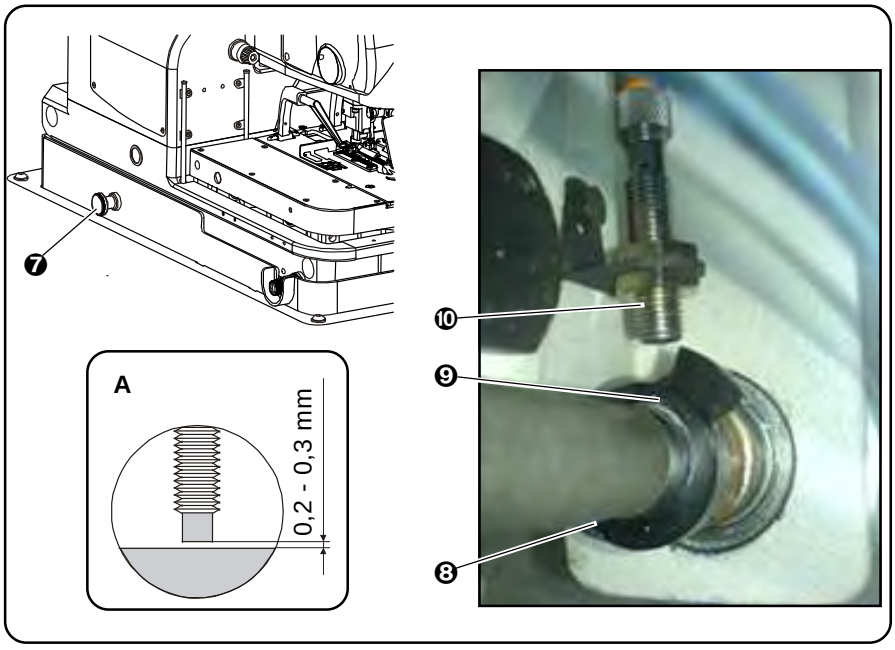

E - STANDARD MACHINE ADJUSTMENT

6. SETTING BED PLATE

The home position of the bed plate is given with the position of sensor screens **BQ2** for axis **X** and **BQ3** for axis **Y**. Sensor screen screws are locked with yellow color by the manufacturer. In the warranty period this operation can therefore be done only by the AMF REECE service mechanic.

6.1. To get access to **BQ2** sensor screen, dismantle the right bedplate cover ❶. Loosen the screew ❸ and set up the sensor plate ❷ approximately to 10 mm from the console edge ❹. Check the correct setting by bringing the machine into home position with pushing the button . The distance from the left and right side of the bedplate to the gauge must be same (X1 = X2) - (see picture **B)**.

6.2. To get access to **BQ3** sensor plate, dismantle the cover ❶. Loosen the screew ❸ and set up the sensor plate ❷ approximately to 133 mm from the bearing support ❽. The belt holder ❾ is preset to 137 mm from the bearing support ❽ (see pic.**C**).

6.3. Set up the distance of sensors from screens to 0,2 - 0,3 mm (see pic. **A**). If the value exceeds, the electrical system does not work correctly.

6.4. Correct the position of the sensor screen **BQ3**, if the dimension from the inner prick in the eye top and the needle center is not 74 mm.

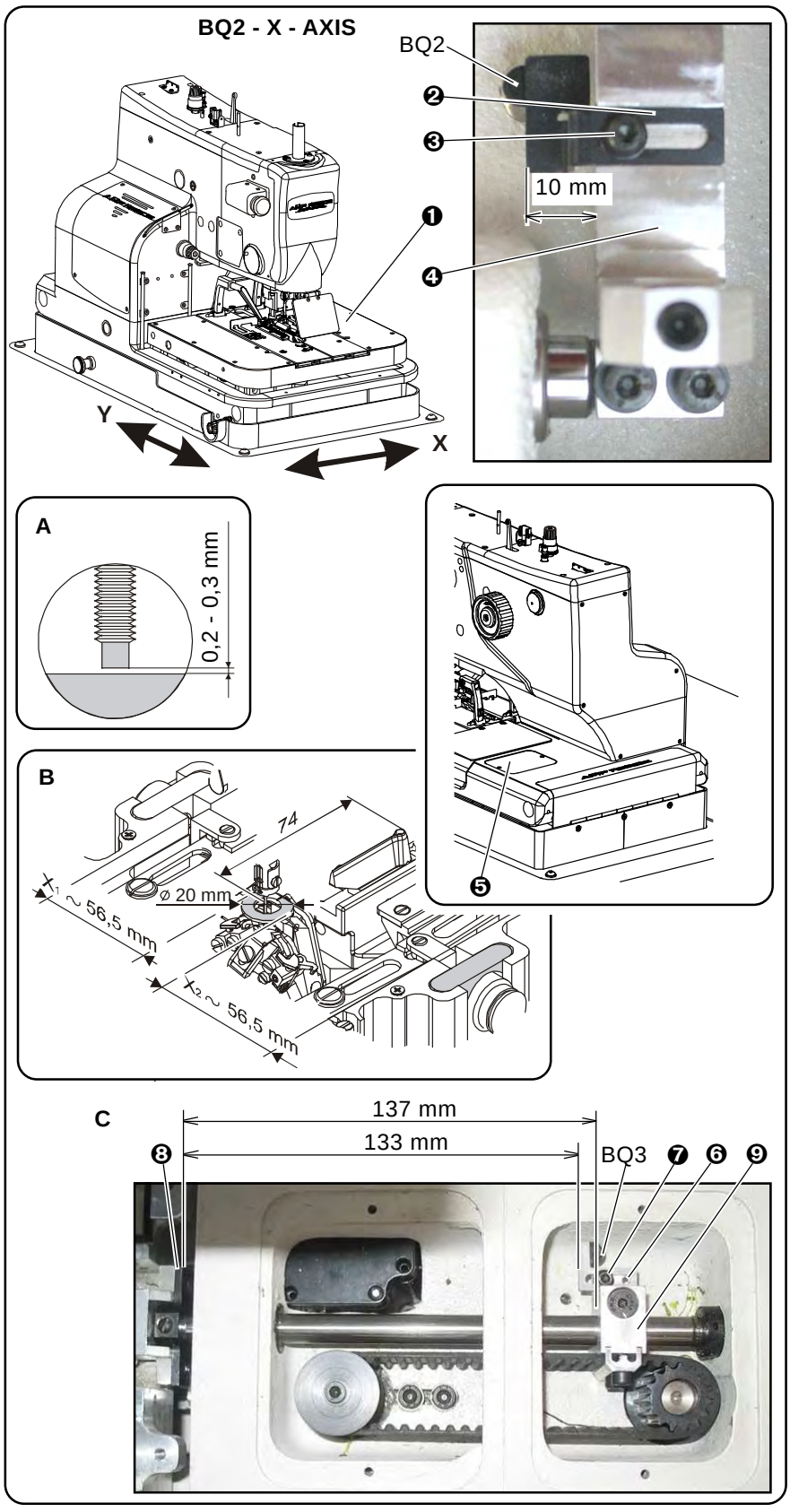

7. SETTING UP TURNING MECHANISM

The home position of the turning mechanism is given by the position of the sensor ❶ plate ❷ (**BQ4**). The bolt ❽ setting the right position of the sewing mechanism is locked with yellow color by the manufacturer. In the warranty period this operation can therefore be done only by the AMF REECE service mechanic.

To set up the mechanism, make sure the display shows a buttonhole with eye, stitch angle 0° (corresponds with value 50 on the display) and cutting gap/space 0,0.

7.1. Bring the machine into the home position by pressing the button . Set up the sewing mechanism body ❿ with loopers support ❸ towards the operator.

7.2. Loosen the screw ❺ in the pulley so that the screw ❻ in the needle bar is on the left. Set up the holder ❹ of the needle bar side movement. Tighten the screw ❺. The distance of the needle from throat plate edge ❼ must be the same at the side prick as well as at the centre prick.

7.3. Loosen the sensor holder ❾ screw ❽. Move sensor holder ❾ to the desired position. Tighten the screw ❽.The sewing mechanism body must be upright towards the longitudinal axis of the bed plate. Check the adjustment with gauges according to bed plate edges.

7.4. Set up stepping on the machine according to **E 2.5.** To see centre pricks better, set up a large cutting space i.e. + 0,5. Turn the hand wheel and sew a buttonhole on a piece of paper. See whether the pricks in the straight part of the buttonhole are upright to the buttonhole axis and centre pricks turned 90°(see pic.**A**). Move the sensor holder ❾ to make correction .

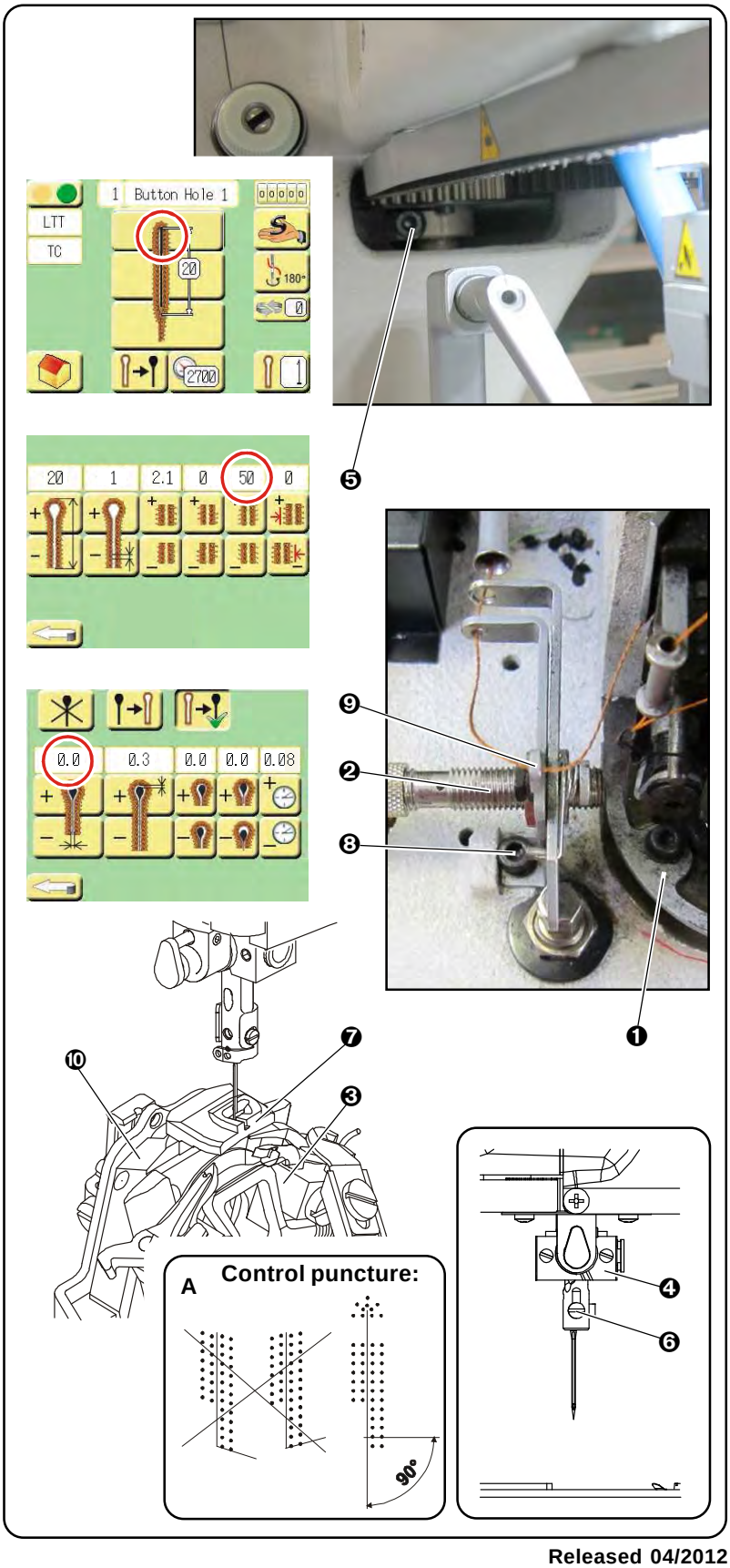

E - STANDARD MACHINE ADJUSTMENT

8. CHECKING SEWING MECHANISM HEIGHT

Before you do further adjustments, check, that the height of sewing mechanism, loopers, spreaders and throat plate is set up correctly. See below.

8.1. Inserting or taking washer ❷ under the race ❸ out sets up the height of the sewing mechanism support ❶ from the surface under the cutting block ❼ . Inserting the washer ❷ heighten the support ❶ (direction **B**), taking it out lowers it (direction **A**). Available thickness of washers 0,1 or 0,2 mm. Use slide gauge to check the values - 8,8 mm from upper edge of the cutting block ❼ to stud diameter ❹.

8.2. Once the throat plate is placed in ❺, it is necessary to check the space between its upper edge and upper face of the clamping mats ❻. The space is preset at the manufacturer with the screw ❾ under the stitch plate ❺ to 0,1 - 0,15 mm. The screw is secured with glue LOCTITE 243.

8.3. The height of the clamp plates botom edge ❽ from the cutting block ❼ is preset at the manufacturer within the range 38,3 - 0,2 mm.

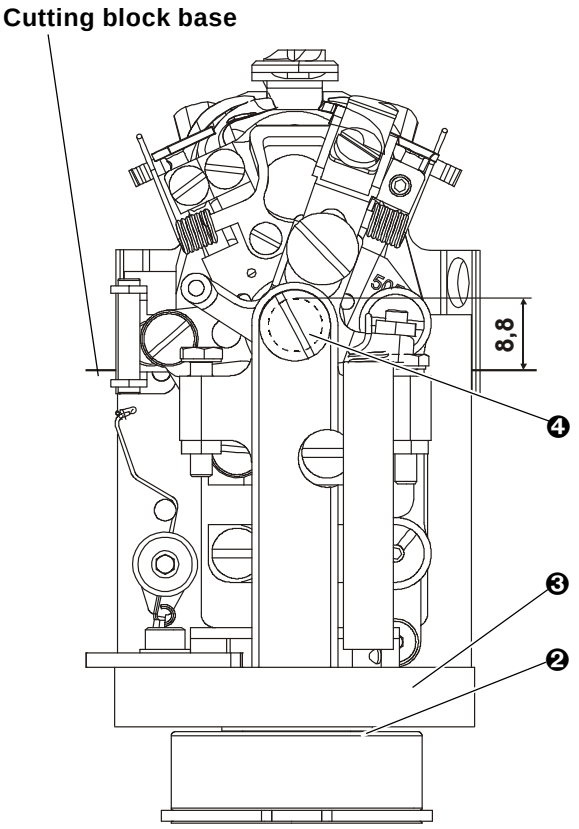

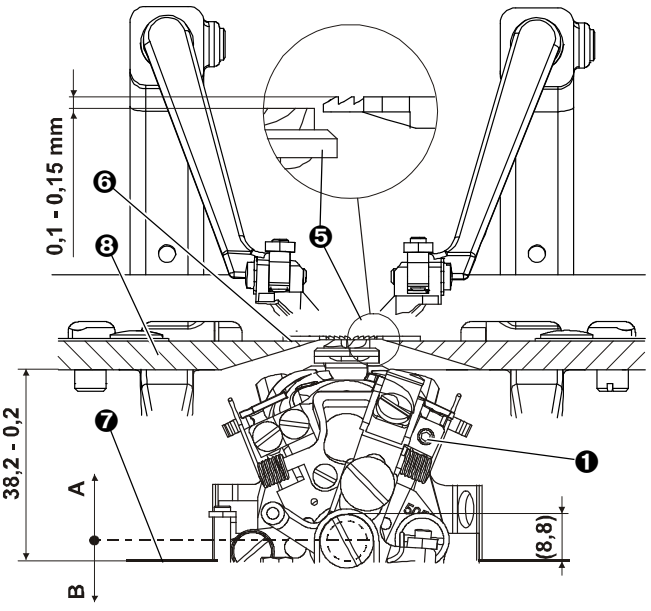

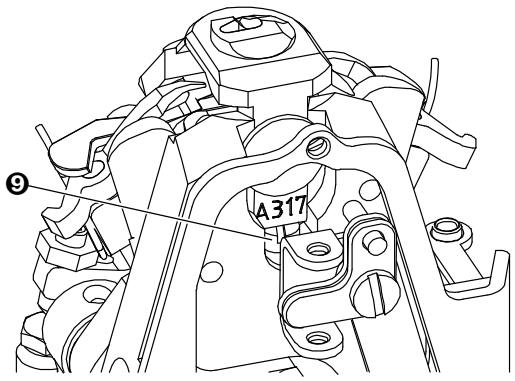

E - STANDARD MACHINE ADJUSTMENT

9. SETTING UP MECHANISM CLAMPING FABRIC

WARNING !
Before doing any kind of adjustment, disconnect the air distribution and blow off remaining pressed air in the machine.

Basic clamp plates ❶ and clamp feet ❷ setup can be adjusted once they are removed from the machine.

9.1. Loosen the screws ❸ adjust clamp feet ❷ alongside (in **Y axis**) and sideways (in X axis) once screws ❹ loosen.

9.2. Set the feet ❷ to overlap the plates ❺ 1,2 - 2,0 mm.

9.3. Remove bedplate side covers ❻ by unscrewing the screws ❼.

9.4. Place the clamp feet ❶ in the machine.

9.5. Loosen the screw ❽, set up clamp uplift ❷ to 12 mm and tighten the screw again ❽ see picture **E**.

9.6. Put the covers back ❻ and tighten the screws ❼.

9.7. Check the setup by sewing.

Recommended space between clamp foot ❷ and needle at outside prick is 1 mm at minimum.
When changing bite or fabric, adjust the overlap as needed. Loosen the screws ❹ and move the foot arm ❷ as much as needed. Tighten the screws ❹ again.

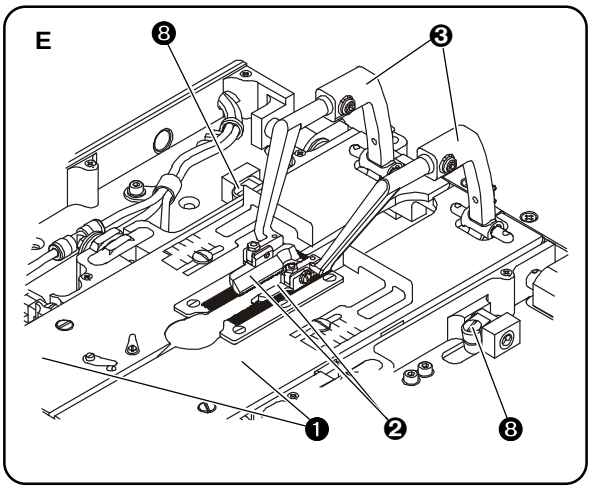

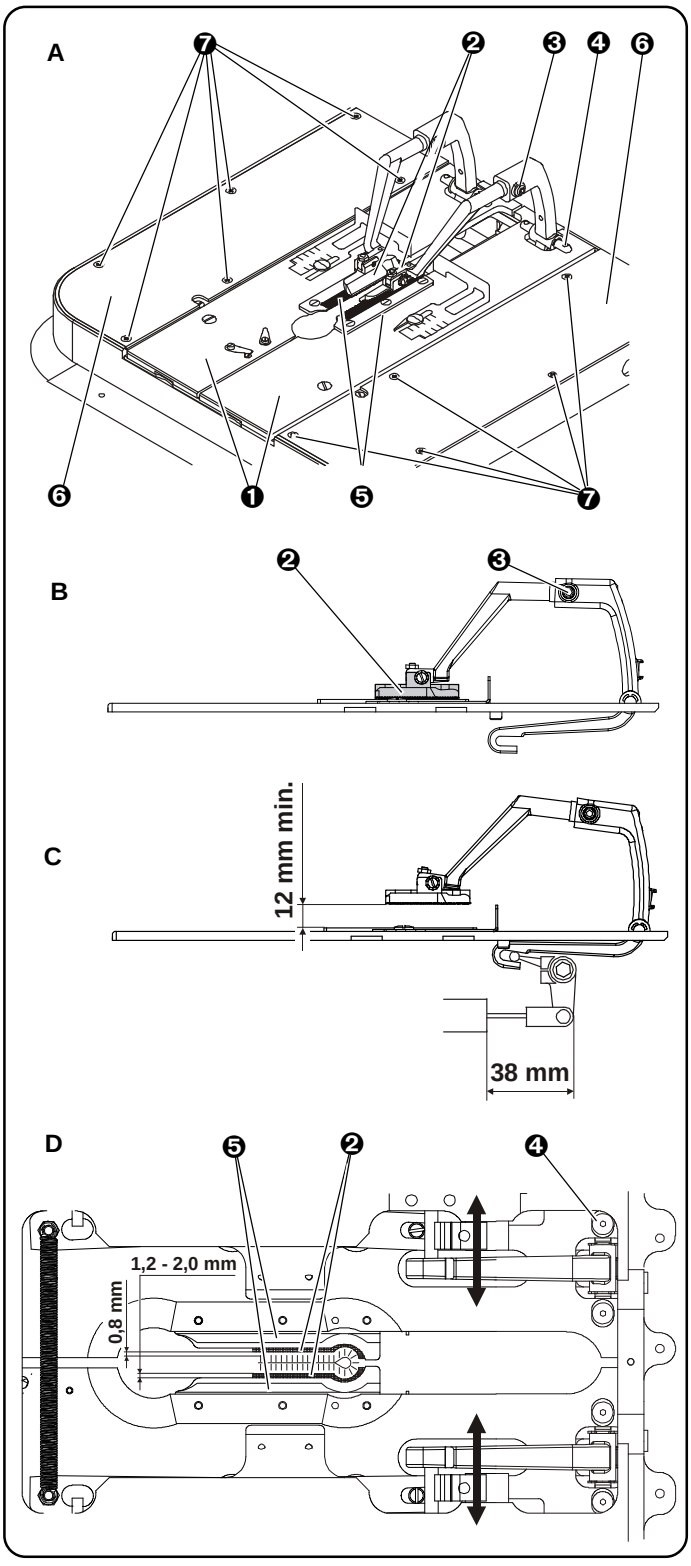

Released 04/2012
E-mail: service@amfreece.cz; parts@amfreece.cz; website: www.amfreece.com
Phone: +420 582 309 286; Fax: +420 582 360 606

E - STANDARD MACHINE ADJUSTMENT

10. VARIOUS SPREADING OF WORKPIECE

Stretch material, especially thin one, not being spread can cause skip stitching. The machine is equipped with a mechanism that can mechanically change the extension of spreading. The mechanism home position can be adjusted once the bedplate covers are removed (see 10.3). The extension of spreading can be adjusted with covers on.

10.1. The spreading of workpiece itself can be changed the way that you loosen the screws ❶ and with the screws ❷ you can change the extension of spreading at each clamp foot separately. Turning the screws ❷ clockwise reduces the spreading. Turning the screws anti clockwise extends it up to 1,8 mm at one clamp plate.

10.2. Home position of mechanism levers ❸ spread is adjusted with end stops ❹, that are secured with screws ❺ marked with yellow color at the manufacturer. They cannot be adjusted during the warranty period. They are set up to approximately 3 mm. Check the adjustment by stepping (section E 2.5) all the way to the point where the throat plate gets between the feet. The distance of the clamping plates ❾ edge from the troat plate must be 1 mm.

10.3. The standard value to set up the cylinder clevis is 27,5 mm from the cylinder holder base (loosen screws ❶ and ❷) - picture **A** and **D**.

10.4. The standard setup of clamp spreading for thin materials is recommended to 0,6 mm. It is the diference of the lever nut distance before and after clamping.

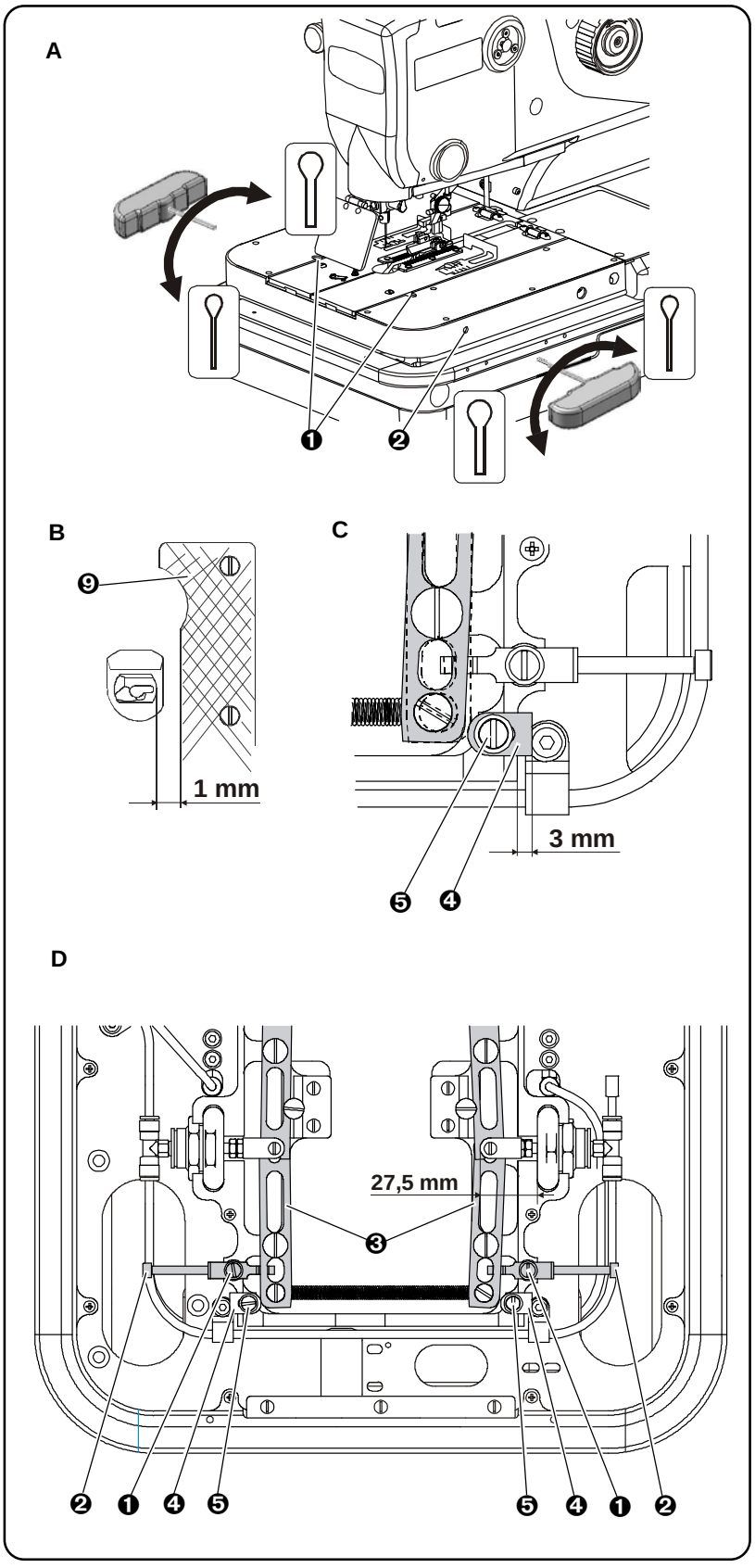

11. CUTTING MECHANISM SET UP

> ***CAUTION !***
> *It is important that parameters, especially cutting space and cutting corrections, are set to „0“ – see chapter* ***D 2.4.****before doing the setup. Buttonhole cutting setup.*

Position of the cut is given by the position of screens **BQ2** and **BQ3** of the bedplate – see chapter **E 6.**

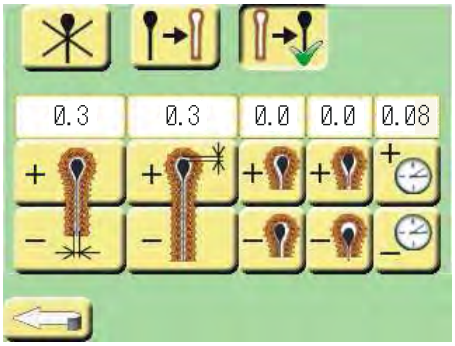

Sensor screen screws are coated by the manufacturer to eliminate unwanted adjustment.

If it is necessary to correct the position of the cut to the sewn buttonhole, adjust the position of the knife as in chapter **D 2.4.** to **D 2.6.**

Make sure that selected eye dimension on the display corresponds with the knife eye shape placed in the machine.

If a wrong knife with different eye dimension is used, it damages the look of the buttonhole, or eye stitches.

The starting point for cutting mechanism position setup at the new or rebuilt machine is the needle and sewing mechanism. The procedure depends on the knife being placed into the cutting lever or cuttig blocks.

Released 04/2012
E-mail: service@amfreece.cz; parts@amfreece.cz; website: www.amfreece.com
Phone: +420 582 309 286; Fax: +420 582 360 606

E - STANDARD MACHINE ADJUSTMENT

11.1.Checking cutting mechanism setup

Make sure that the machine is in the home position.

11.1.1.Press the button  on the service menu display. Basic parameter screen comes up. There is a password needed as it is under the II security level. – see chapter **E 2.2.1.**

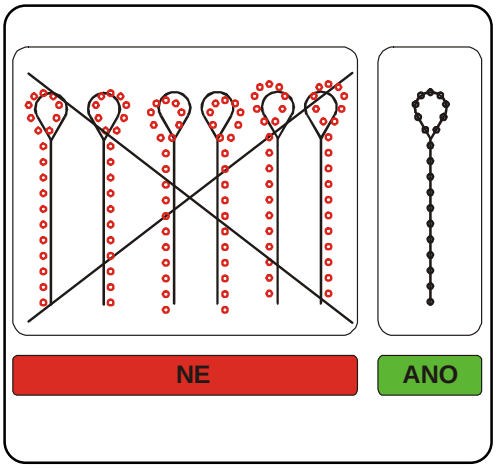

11.1.2.Press the button  to activate the stepping function. Then press the button , bedplate movement. Double press of the button  brings you back to the main menu,where you can check the display and its correct setup. Illuminated icon  in the top left hand corner confirms, that te service mode is on.

11.1.3.Press the button  to come back to the service menu screen.

11.1.4.Depress the left and right foot pedal to make the bedplate move forward.

11.1.5.Instead of fabric, clamp in the machine a piece of paper – see chapter **C 4**.

11.1.6.Press the button  and turn the hand wheel. When the needle reaches upper dead point, it pricks into the paper. Repeat these two steps until you make with the needle a full shape. **ATTENTION! you must not finish the whole buttonhole.**

11.1.7.Double press of the button  brings you back to the main screen. Press the button . If this icon , is illuminated, the bedplate/, stùl comes back to the home position. In case there is an error message in the top left hand corner, i.e. , turn the hand wheel until you see . Then press the button . to bring the machine back into the home position.

11.1.8.Press the button activation of immediate cutting  placed on the control box and cut the paper.

E - STANDARD MACHINE ADJUSTMENT

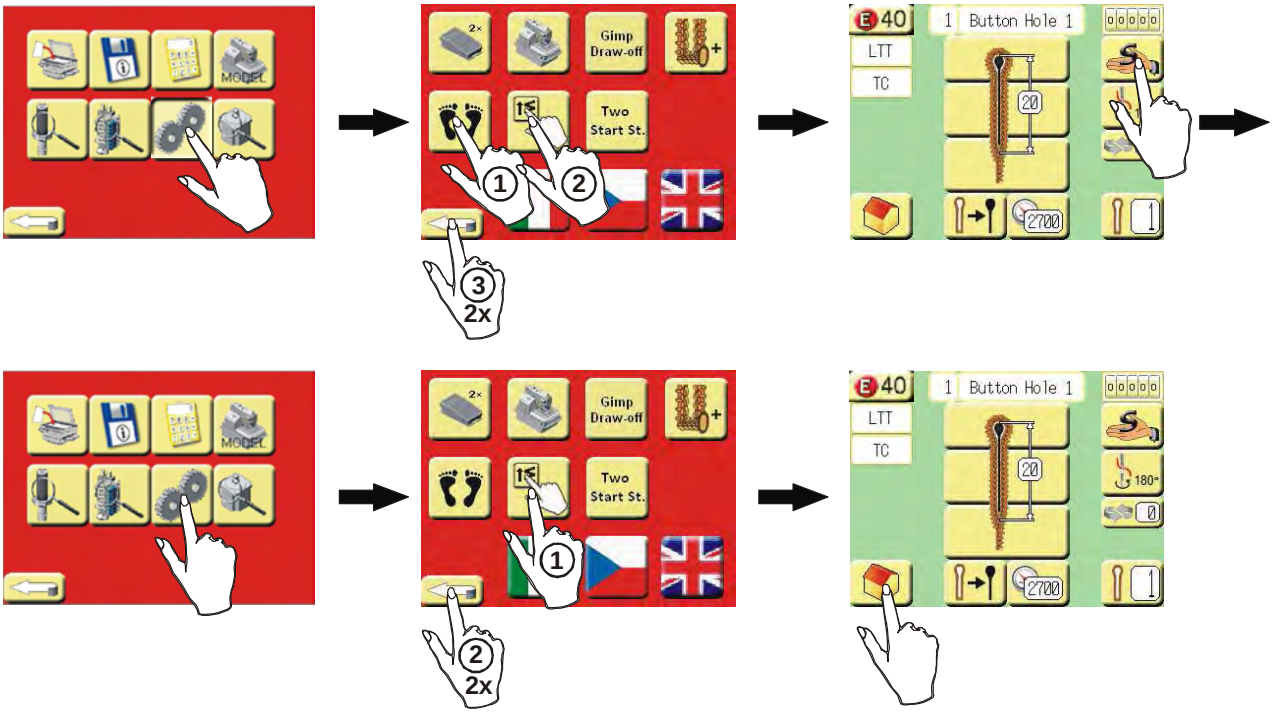

Released 04/2012
E-mail: service@amfreece.cz; parts@amfreece.cz; website: www.amfreece.com
Phone: +420 582 309 286; Fax: +420 582 360 606

E - STANDARD MACHINE ADJUSTMENT

11.2. Knife and cutting steel set up – standard:

CAUTION!
Knife end stops ❹ are preset from the manufacturer and secured with screws ❺. Screws ❺ are marked with yellow color and they cannot be loosen during the warranty period.

Knife ❶ fixed in cutting block ❷ has to be set up in correct position with the cutting steel ❻.

Loosen the screws ❸ and with a gentle tapping move the cutting block ❷ to the left or to the right (in X axis) as needed.

Once the cutting block is set up ❷ in the right position, tighten the screws ❸.

Loosen the screws ❺. Adjust the knife end stop ❹ (in Y axis) in cutting block ❷ at 78 mm from the needle. Tighten the screws ❺.

Check the adjustment as in chapter **E 11.1.**

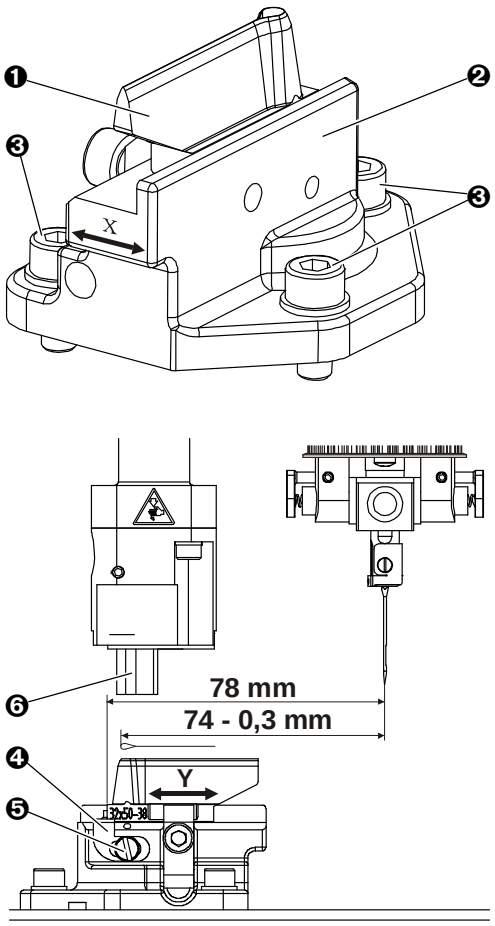

11.3. Knife and cutting steel set up – Ultraflex:

> ***CAUTION!***
> *Knife end stops ❹ are preset from the manufacturer and secured with screws ❺. are marked with yellow color and they cannot be loosen during the warranty period.*

Adjust the knife ❶ installed in the cutting lever ❻ into correct position.

Loosen the screws ❷ and with a gentle tapping (in X axis) move the knife base ❸ to the correct position. Tighten the screws ❷.

Loosen the screw ❺. Move the end stop ❹ (in Y axis) as needed. Adjust the distance of the knife end stop ❹ in X axis in the cutting head to 78 mm from the needle. After adjustment tighten the screw ❺.

> ***NOTE!***
> *Make sure and tighten the screw after the knife change.*

Check the adjustment as in chapter **E 11.1.**

Adjust the sensors ❽ to diaphragmes ❾:

Loosen the nut ❼ and remove/tighten sensors ❽ so that the distance between the diaphragm ❾ and the sensor ❽ was 0,3 mm. Tighten the nut ❼.

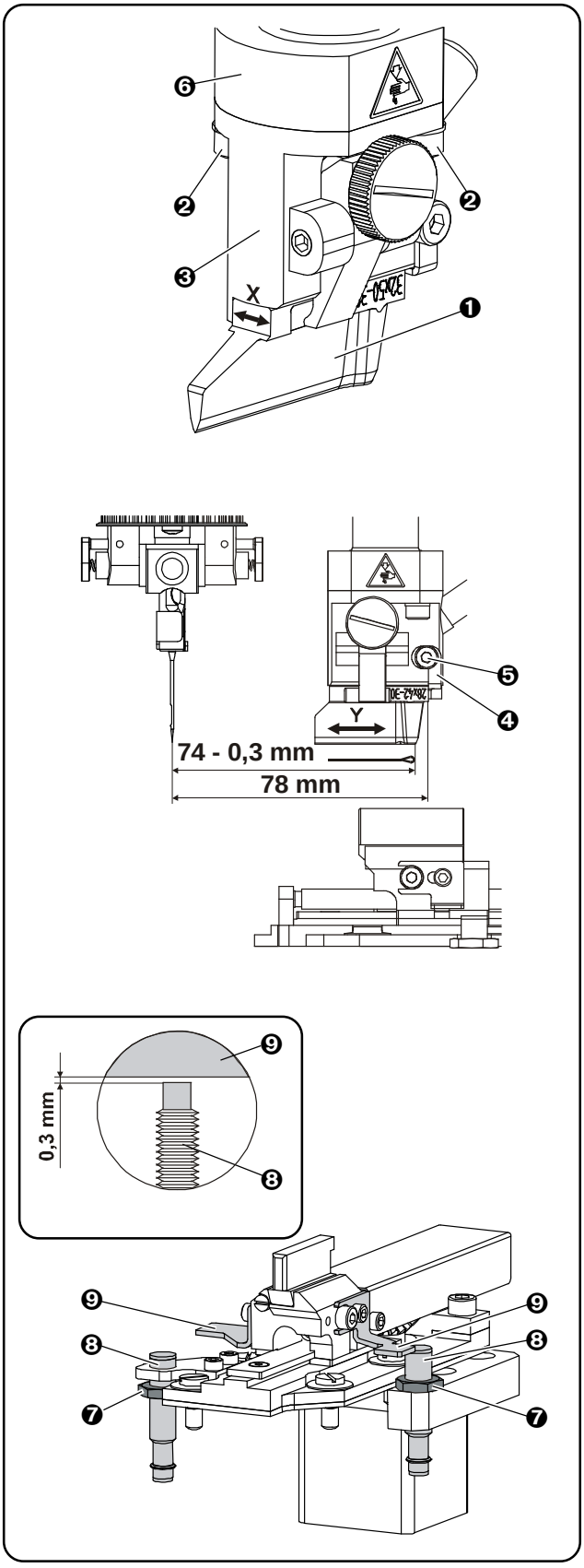

Released 04/2012
E-mail: service@amfreece.cz; parts@amfreece.cz; website: www.amfreece.com
Phone: +420 582 309 286; Fax: +420 582 360 606

E - STANDARD MACHINE ADJUSTMENT

11.4. Pressure and cutting sensor adjustment:

> ***WARNING!***
> *Follow parameters setup otherwise knife may get damaged!*

Pneumatic system pressure is preset by the manufacturer with the regulator ❶ to 0,6 MPa.

Cutting knife pressure is preset by the manufacturer with the regulator ❷ to 0,5 MPa). Such pressure is suitable for all materials of up to 30 mm cut length.

For materials with difficult cutting increase the pressure of 1/2 turn anticlockwise.

Ultraflex:

Set up the pneumatic system pressure on the regulator X to 0,25 MPa in machines with sliding cutting block / pohyblivou sekací podlo•kou ❸.

The senzor ❹ on the cutting cylinder ❺ is preset approximately to 54 ±1 mm (depends on machine version).

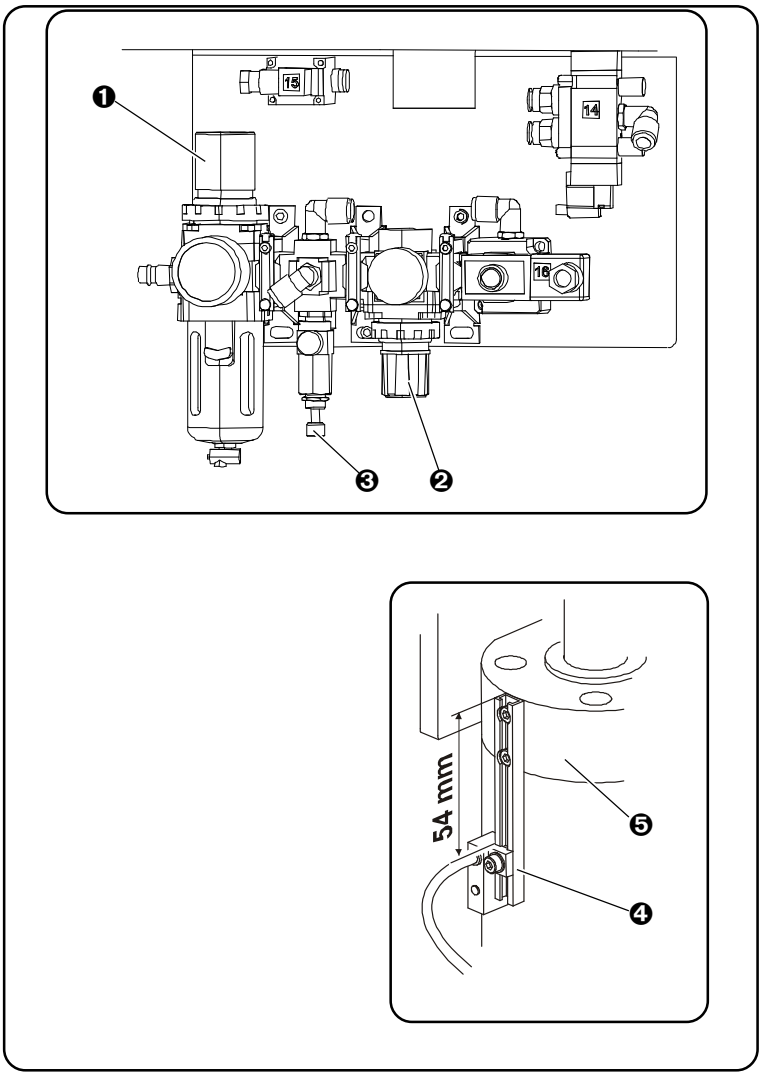

E - STANDARD MACHINE ADJUSTMENT

12. KNIFE AND CUTTING STEEL EXCHANGE

12.1. Cutting with fixed cutting steel

CAUTION!

- *If the material is not neatly cut with the cutting steel, check the quality of knife edge.*
- *If the knife is damaged, replace it with new one.*
- *Do not use an old cutting steel if the knife has been replaced. It would get damaged.*

It is necessary to change the cutting knife or cutting steel if the cut length is changed. If the parts are worn out, they need to be both replaced.

Procedure:

Loosen the screew ❶ and take the worn cutting block ❷ in the cutting head ❸ out. Put the new cutting block ❷ so that it leans against the bearing area ❹. Tighten the screw ❶.

Loosen the screew ❺ and take the cutting knife ❻ out from the cutting block ❼.

Put the new knife in ❻ so that it leans against the bearing area ❽. Tighten the screw ❺.

Press the button ❾  to check cutting. Immediate cutting activation.

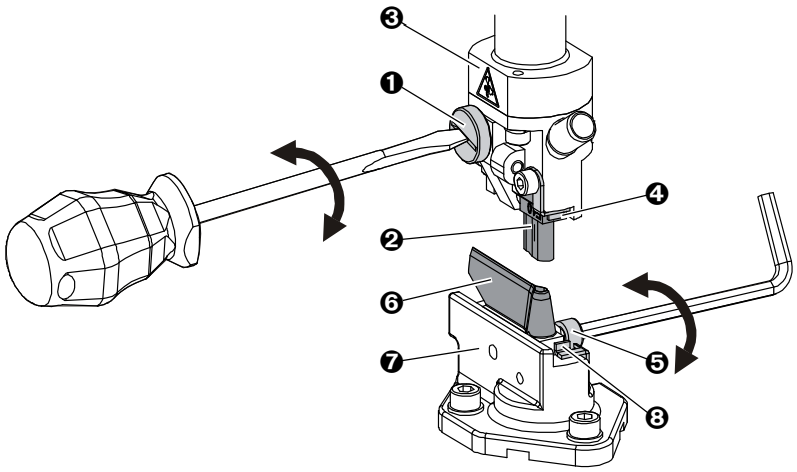

Cutting steel surfaces:

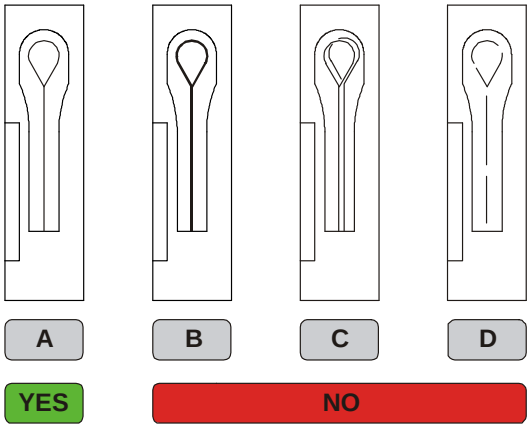

A - Correct knife print
B - Knife print is too deep
C - Different knife type caused two different prints
D - Partial knife print

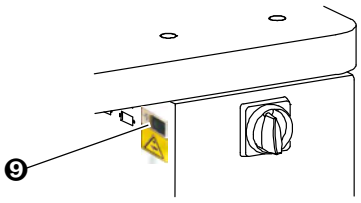

E - STANDARD MACHINE ADJUSTMENT

12.2. Modification of cutting steels surface

Neat buttonhole cut in fabric can be achieved only if the cutting pressure is the same along the whole buttonhole length. Damaged cutting steels can be refined on their surface by grinding but only 1 mm of the material thickness. Modified block can be placed in the machine again.

Once the cutting steel is installed, check the cut with the Immediate cutting activation button ❸  placed on the control box.

If the fabric is not cut, it is necessary to move the cutting sensor ❷ upwards (1 mm max).

Procedure:
Loosen the screw ❶ and move the sensor ❷ in required direction as in the picture.

Tighten the screw ❷ to secure the position of the sensor ❶.

Check the correct adjustment by repeated pressing of Immediate cutting activation button ❸ .

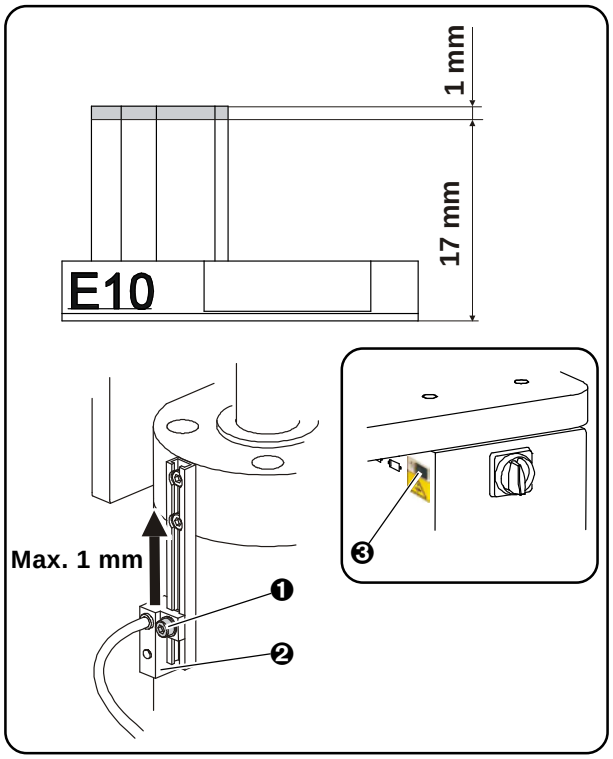

12.3. Cutting with sliding cutting steel (Ultraflex)

It is necessary to change the cutting knife or cutting steel if the shape of the buttonhole cut is changed.

Procedure:
Loosen the screew ❶ and replace the cutting knife ❷ in the cutting head ❸.

Loosen the screew ❹ and change the cutting steel ❺ in cutting block ❻.

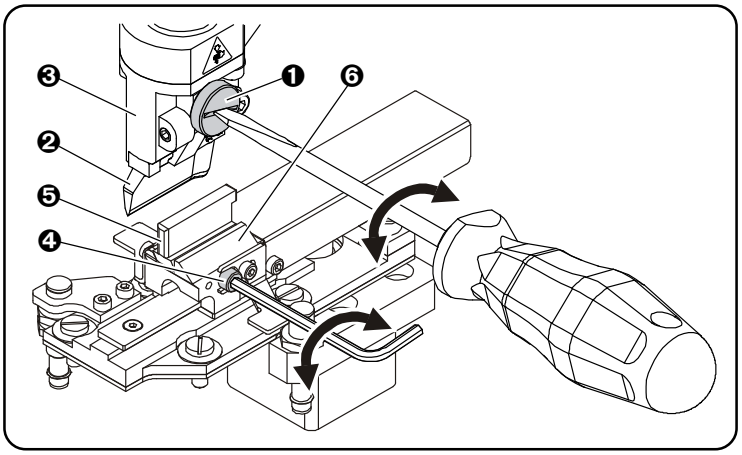

CAUTION!
At this model it is not necessary to replace the cutting steel if a knife type is changed. The cutting steel is heat-treated in a way to provide higher machine flexibility.

WARNING!
At this model, cutting steels must not be sharpened because the quality of the buttonhole cut would go worse! If the cutting steel seems to be worn out (see chapter E 12.1.), change it with new one!

E - STANDARD MACHINE ADJUSTMENT

13. STANDARD SEWING CAM SETTING

Bring the needle bar into home position. Loosen the screw ❸. Turn the cam ❶ as needed and adjust it on the match mark ❷. Tighten the screw ❸.

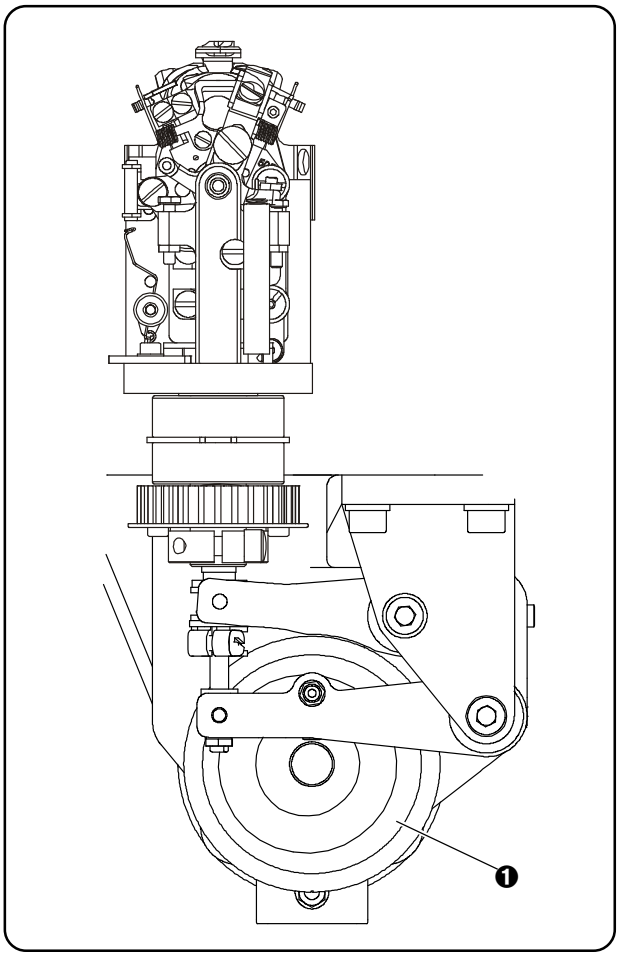

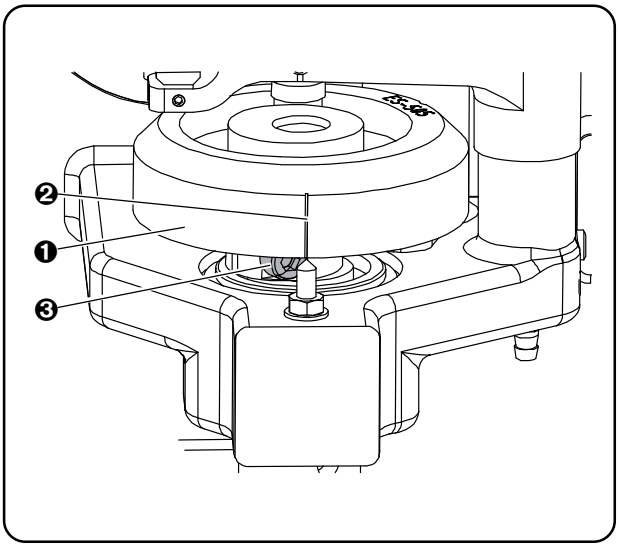

Released 04/2012
E-mail: service@amfreece.cz; parts@amfreece.cz; website: www.amfreece.com
Phone: +420 582 309 286; Fax: +420 582 360 606

E - STANDARD MACHINE ADJUSTMENT

14. ADJUSTING THE NEEDLE AND LOOPER TIMING

> ***NOTE!***
> *The needle bar moves thourgh two needle drop cycles for each single turn of the upper shaft pulley. The needle drop movement toward the left side (knife cutting side) is called the centre sewing position and the needle drop movement toward the right is called the bite sewing position. In addition, the amount of movement involved when the needle bar rises from its lowest position until the tip of the looper at either the left or right is with the center of the needle is called the loop stroke.*

The left and right loop strokes must be the same. This section describes the adjustments to be carried out so that the left and right loop strokes are the same.

14.1. Remove the two screws ❶, an then remove the needle bar guard ❷ .

14.2. Turn the upper shaft pulley ❸ to set the needle bar to its lowest position at the centre sewing position.

14.3. Use callipers to measure the lenght from the edge of the needle bar ❹ to the top of the needle bar holder base ❺.

14.4. Turn the upper shaft pulley ❸ until the tip of the eye looper ❻ is alignet with the needle center ❼.

14.5. Repeat the step 3, use calipers to measure the lenght from the edge needle bar ❹ to the top of the needle bar bush holder base ❺.

14.6. Calculate the difference **X** between the value obtained in step 5 and the value obtained in step 3.

14.7. Repeat steps 2 - 6 and calculate the diffrerence **X** for the bite sewing position in the same way as for the centre sewing position.

14.8. Loosen the screw ❾.

14.9. Move the ❿ to the left /right so that the lengths **X** are the same on the both sides.

14.10. Once the adjustment is complete, securely tighten the screw ❾.

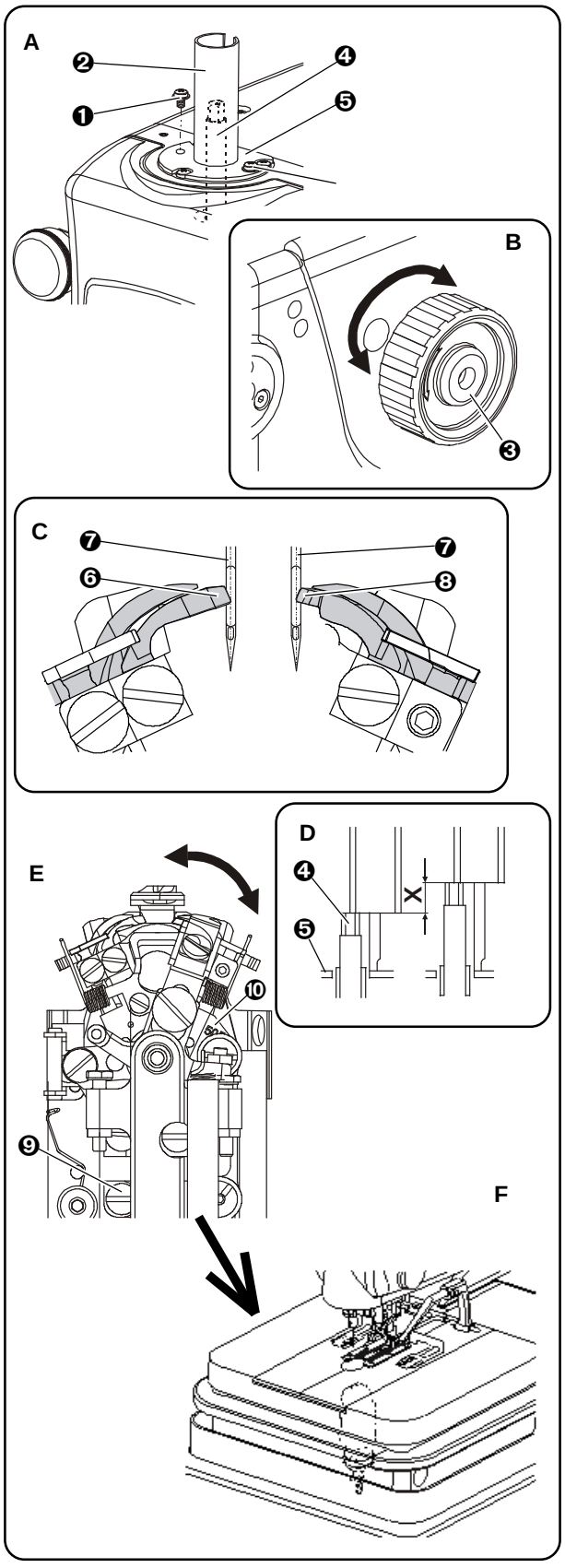

E - STANDARD MACHINE ADJUSTMENT

15. ADJUSTING THE LOOPER STROKE

The standard looper stroke is 3,5 mm. (It may be changed according to material and thread used.)

15.1. Turn the upper shaft pulley ❶ to set the needle bar the needle drop position at the centre sewing position.

15.2. At this position, use calipers to measure the lenght from the edge of the bar ❷ to the top of the needle bar bush holder base ❸.

15.3. Add 3,5 mm to the value obtained in step 2 above, and set the width with the calipers to the resulting value.

15.4. Turn the upper shaft pulley ❶ until the needle bar ❷ touches the edge of the calipers, and stop turning when the upper shaft pulley ❶ is at that point **Y**.

15.5. Tilt back the machine head.

15.6. Loosen the screw ❹ of the lower shaft.

15.7. With the upper shaft pulley ❶ stopped, turn the lower shaft so that the tip of the eye looper ❺ is aligned with the needle center ❻.

15.8. Once adjustment is complete, securely tighten the screw ❹.

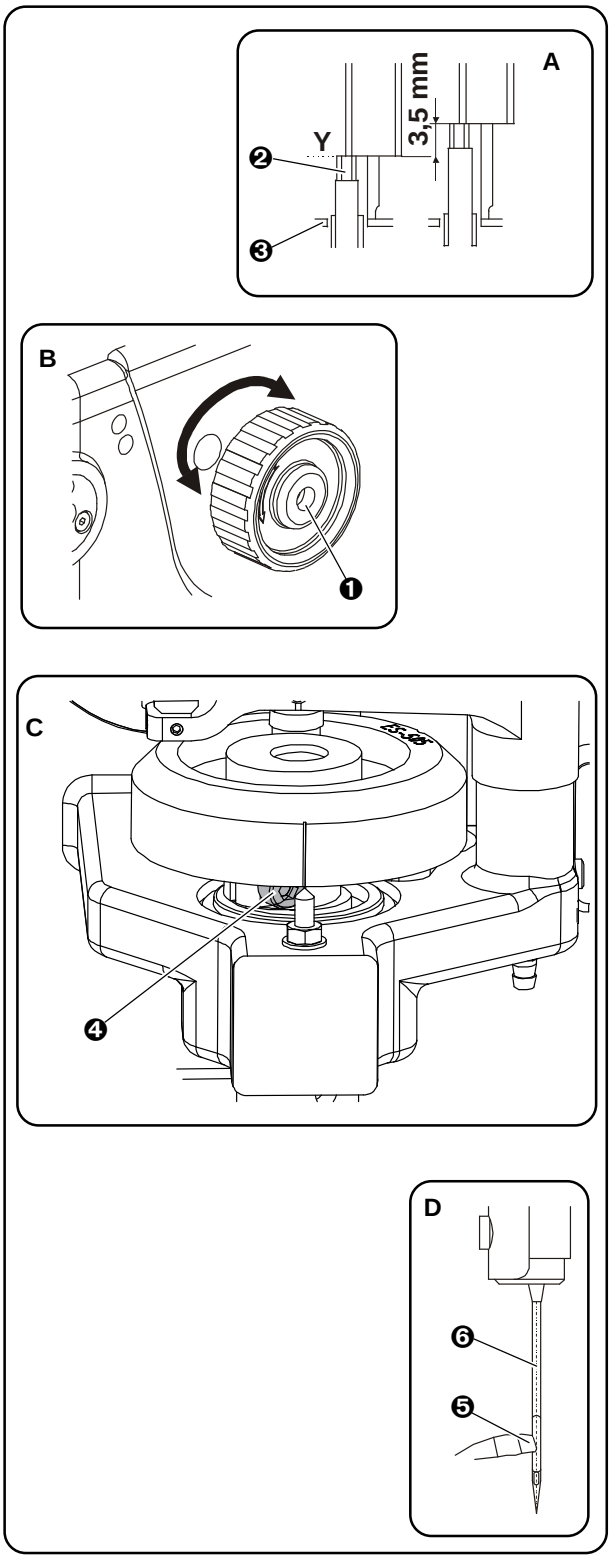

Released 04/2012
E-mail: service@amfreece.cz; parts@amfreece.cz; website: www.amfreece.com
Phone: +420 582 309 286; Fax: +420 582 360 606

E - STANDARD MACHINE ADJUSTMENT

16. ADJUSTING THE HEIGHT OF THE NEEDLE BAR

The standard height for the needle bar is 1,5 mm. (It may be changed according to material and thread used.)

16.1. Remove the front cover.

16.2. Turn the upper shaft pulley until the tip of eye looper ❶ is aligned with the top edge of the needle hole in the needle center ❷, when the needle is at the inside sewing position.

16.3. Loosen the two screws ❹ of the top and bottom needle bar clamps ❸.

16.4. Lower the needle bar ❺ 1,5 mm from the position where the of the eye looper ❶ is aligned with the top edge of the needle hole.

16.5. In order to make the needle bar turn smoothly, adjust it so that there is no play in the needle bar, but there is enough space between the needle bar clamps ❸ and the needle bar feed rock link ❻ for oil get into.

16.6. Once adjustment is complete, securely tighten the two screws ❹ and install the front cover.

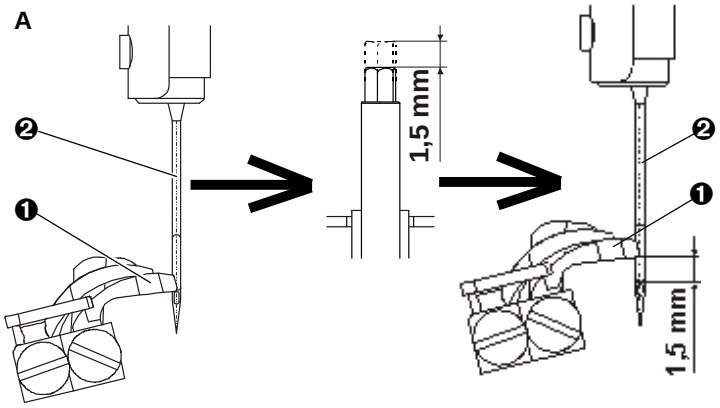

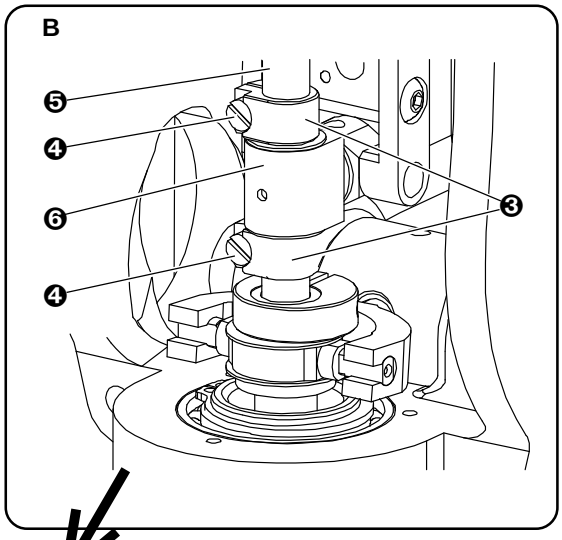

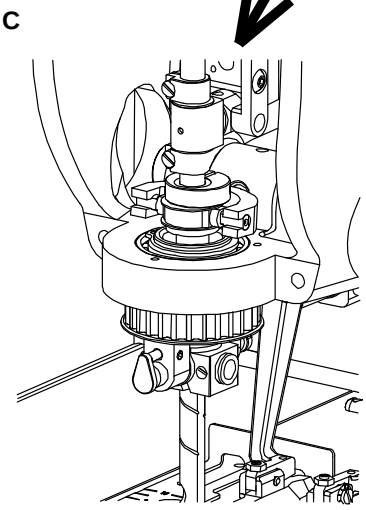

E - STANDARD MACHINE ADJUSTMENT

17. ADJUSTMENT OF DISTANCE BETWEEN NEEDLE AND LOOPERS

17.1. Adjust the left looper sideways ❶ by loosening the screw ❷ so that the gap between the needle ❸ and its tip is 0,1 - 0,2 mm. Tighten the screw ❷.

17.2.Take the same steps to to adjust right looper ❹ by loosening the screw ❺ so that the gap along the needle when the looper passes by the needle is the same, 0,1 - 0,2 mm. Secure the position by tightening the screw ❺.

17.3.It is important to check whether there is the same gap as in 15.5. in the left (right) looper prick on the returning path. It is necessary to adjust different gap by turning the needle bar once the screw ❻ of the turning wheel ❼ is loosened.

17.4. Distance of the loopers from the needle must be checked in 4 positions of needle bar and race. See picture **B**.

A

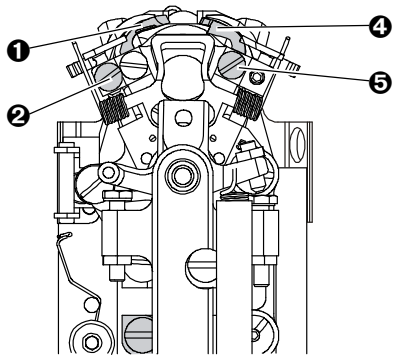

B

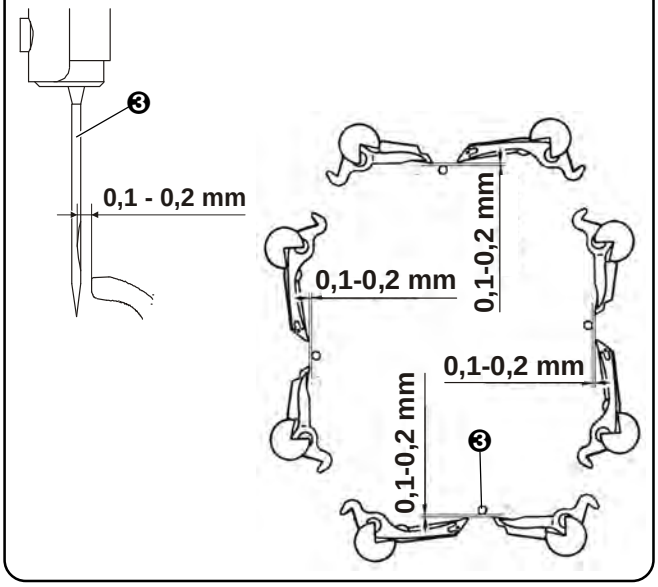

C



E - STANDARD MACHINE ADJUSTMENT

18. LOOPERS ADJUSTMENT

Turn the hand wheel to adjust the loopers.

Procedure:

18.1. Loosen the screw ❶ on the race to release end stoppers ❷. Moving and turning the end stoppers ❷ in the direction of arrows you can adjust the spreaders ❸ and ❹. Set the right spreader ❸ to the edge of the right looper ❺, set the left spreader ❹ with the gap on the hole of the left looper ❻. The end stoppers ❷ define the spreaders axial play ❸ and ❹. Once adjusted, they cannot drag.

18.2. Check the play between loopers ❺ and ❻ and spreaders ❸ and ❹. It must be as small as possible:
Right looper- 0,05 mm max so that sewing thread cannot go between right looper ❺ and spreader ❸.
Left looper - 0,1 mm min so that sewing thread can go between left looper ❻ and spreader ❹.

18.3. Check the play between the needle ❼ and the support ❽. Adjust the support ❽ by bending it to 0,05 mm of play. The play between the needle ❼ and the support ❾ should be 0,2 mm for the needle Nm 100.

18.4. Once the stitch plates ❿ are fixed, check the play between the needle ❼ and the stitch plate ❿.

18.5. Loosen the screew⓫ . Turn the spreader bar and carefully adjust the clamp ⓬. Set up the left spreader ❹ to that when the needle ❼ leaves left looper ❻, the play between the needle ❼ and the left spreader ❹ is 0,6 mm at minimum. When adjusting the left spreader ❹ adjust the spreading of the right spreader ❸ as well.

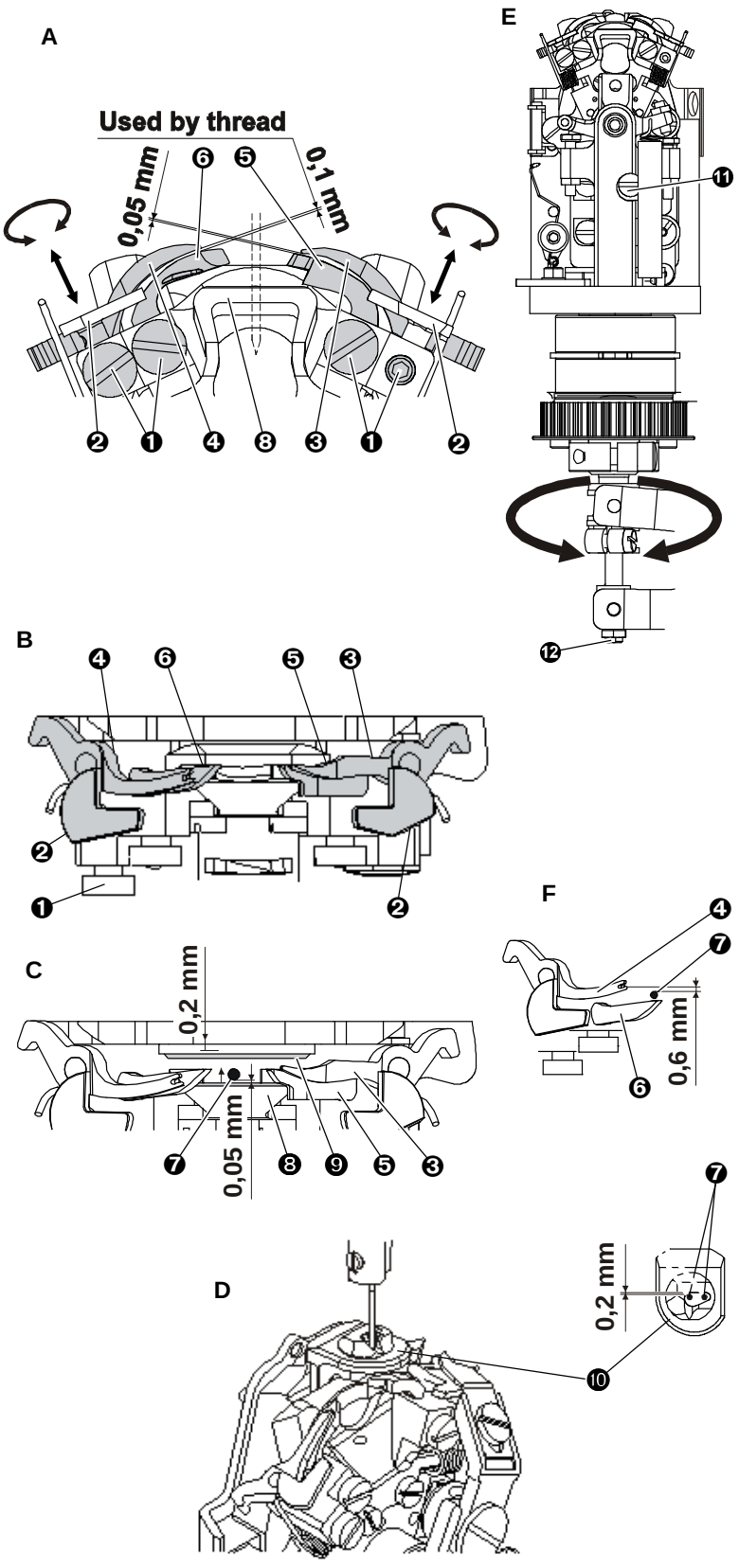

19. STITCH BITE MECHANISM SET UP

The **ES-505** machine can electronically change the stitch bite –see chapter **D 2.3.3**. It is possible to adjust the mechanism for 2 main widths – approximately 1,9 mm and 2,7 mm. Changing the value electronically on the display, it is possible to affect the main widths in range of ± 0,3 mm.
If you are going to change the position of mechanism mechanically, unscrew the screws on the upper cover at first and remove the upper cover.

19.1. Loosen the screw ❶ and the securing screw ❷ and loosen the nut ❸.

19.2. When adjusting the bite to smaller one (1,9 mm), move the lever ❹ to the left to the edge of the stopper ❺. Once the bite is adjusted with screws ❶ and ❷ tighten the nut ❸.

19.3. When adjusting the bite to bigger one (2,7 mm), move the lever ❹ to the right to the edge of the stopper ❻. Once the bite is adjusted with screws ❶ and ❷ tighten the nut ❸.

19.4. If the bite size is changed, it is necessary to adjust the loopers timing again – see chapter **E17**.

NOTE!
In case you increase the bite, it is necessary to check the slot size in the throat plate, since the machine can get damaged!

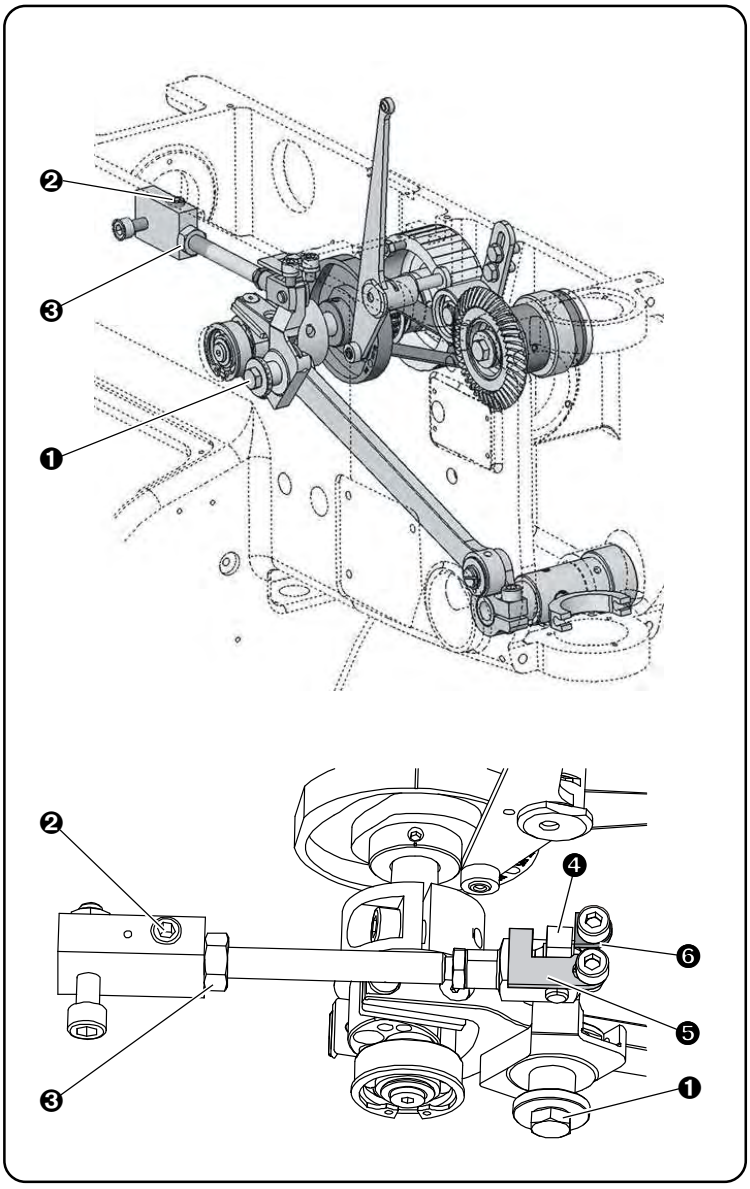

Released 04/2012
E-mail: service@amfreece.cz; parts@amfreece.cz; website: www.amfreece.com
Phone: +420 582 309 286; Fax: +420 582 360 606

E - STANDARD MACHINE ADJUSTMENT

20. UPPER THREAD TRIMMING MECHANISM - AF, LTT

20.1. Fit in the holder ⓬ with trimming knife ❶. Before you tighten the screw ❷ adjust the hight of the knife ❶ so that the play of the knife above the right spreader ❸ is 0,1-0,15 mm.

20.2. The position of the knife ❶ to catch the upper thread loop can be changed by loosening the screws ❺. The knife edge must be 0,9 mm from the needle ❽. When the position of the knife is changed, it is necessary to check the height to keep the play as in 20.1.

20.3. Adjust the home trimming knife angle ❶ by the screw ❹ so that the left side of the knife matches the right side of the stitch plate.

20.4. Use the stopper screw ❻ and the nut ❾ to adjust the dead position of the knife ❶ so that the trimming knife ❶ does not catch the bottom thread with its tip.

20.5. Adjust the position of the control lever ❼ so that the control lever ❼ pin ⓭ is between the clevis actuator ⓮. Turn the screw ⓾ to adjust the position of the control lever ❼ and secure it with the nut ⓫.

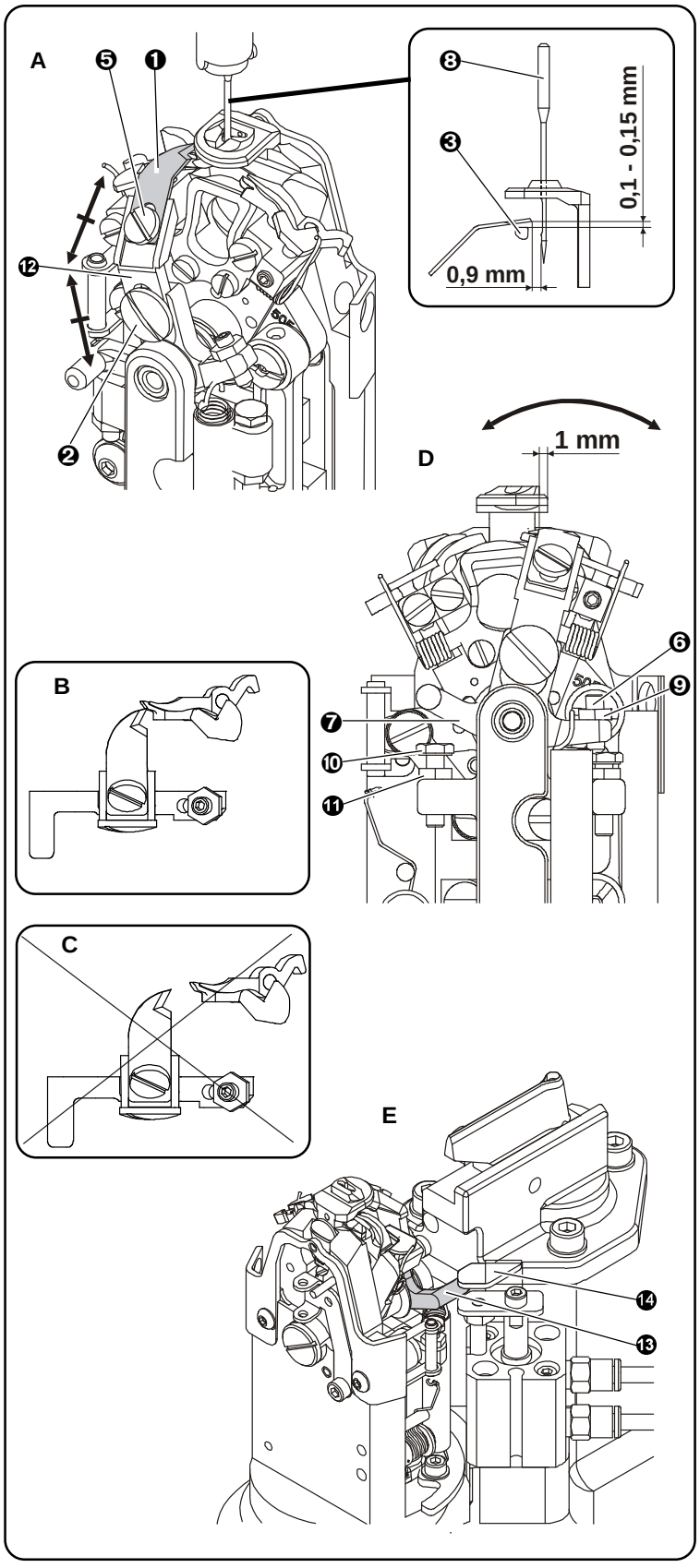

E - STANDARD MACHINE ADJUSTMENT

21. BOTTOM THREAD AND GIMP TRIMMING - LTT

The bottom thread and gimp is trimmed in clamping plates area. The clamp feet are released after trimming.

Procedure:

21.1. Adjust the bottom thread and gimp so that they are separated at the top and at the bottom with the guiding plates ❶.

21.2. The leaf springs ❸ (bottom thread) and ❹ (gimp) hold correct position of the bottom thread and the gimp is ensured by the grasping fixing plate ❷.

21.3. Loosen the screw ⓬. Move the lever ⓭ to the end screw ㉓. Then set up the distance between the sliding knife edge ❼ and clamp plate edge ⓮ to 5,5 mm. Tighten the screw ⓬.

21.4. Adjust the maximal position of of the operating rod ❾ and the arm ❺ with the stopper screw ❿ so that the edge of the fixed knife ❻ matches the mark ❽ on the knife ❼. Secure the stopper screw with a nut ⓫.

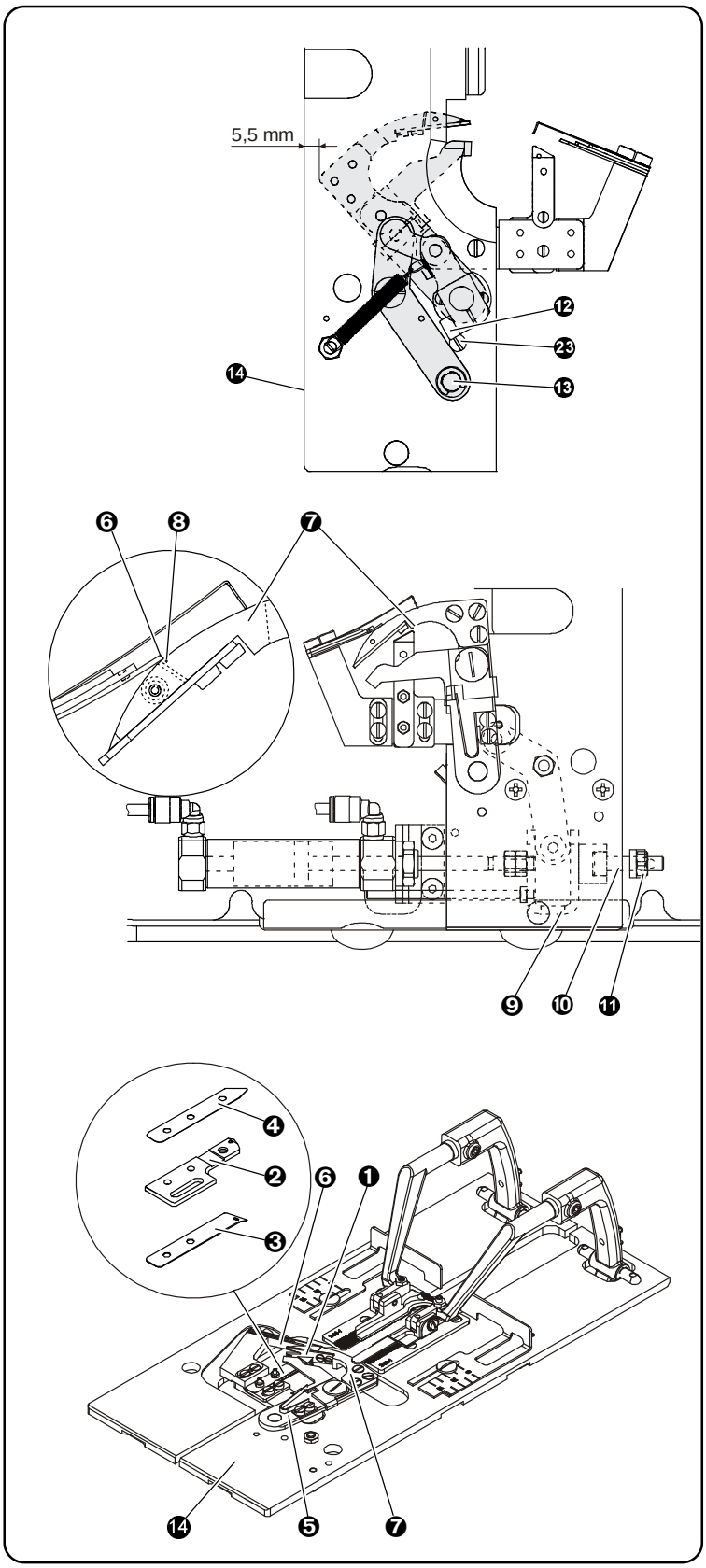

Released 04/2012
E-mail: service@amfreece.cz; parts@amfreece.cz; website: www.amfreece.com
Phone: +420 582 309 286; Fax: +420 582 360 606

E - STANDARD MACHINE ADJUSTMENT

22. LTT KNIFE REPLACEMENT

Unscrew the screws ❶ and remove the knives upper cover ❷.

22.1. Replacing moving knife:

Unscrew the screws ❸ and remove the moving knife ❹.

Unscrew the screws ❹ from the moving knife ❿ and remove the thread separator ⓫.

Put the new moving knife ❹.

Install a new thread divider ⓫ onto a new moving knife ❹ and screw the screws ❿. Then fit a new moving knife ❹ on the moving knife lever ⓬ and tighten the screws ❸.

22.2. Replacing fixed knife:

Unscrew the screws ❺ and take the fixed knife ❻ out.

Install the following in the given order onto the fixed knife ⓭ top flat holder: new fixed knife ❻, bottom spring ❼, top spring **U** ❽ and thread guide ❾. Tighten the screws ❺.

Note:
Once the knives are replaced, do their adjustment as in chapter **E 23.**

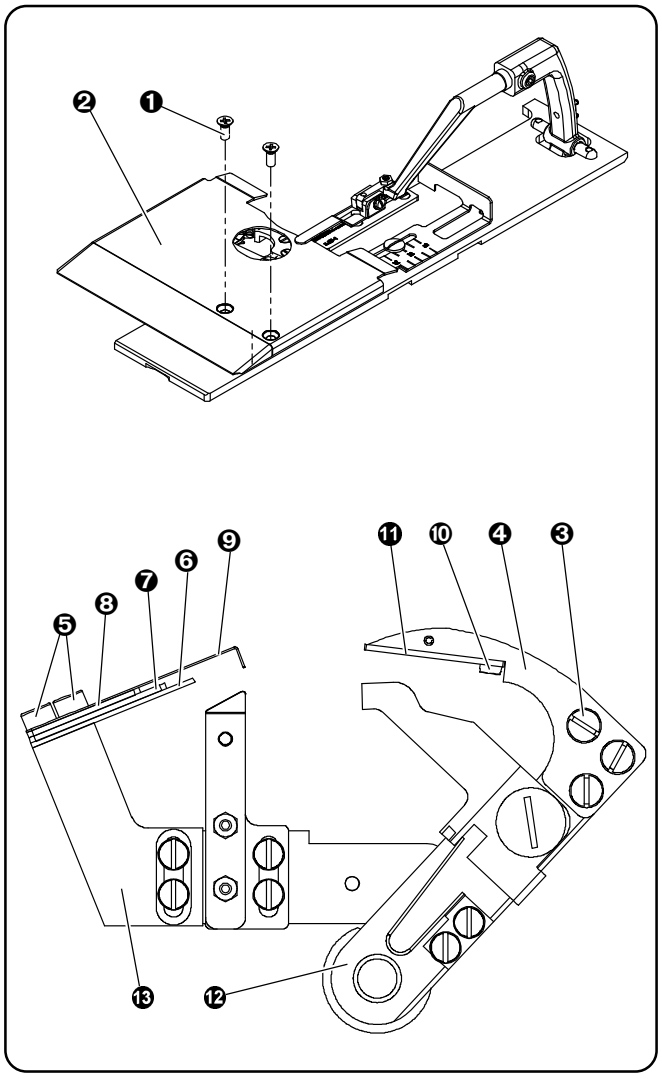

E - STANDARD MACHINE ADJUTMENT

23. KNIVES ADJUSTMENT - LTT

23.1. Loosen the screews ⓲. Turn the sliding knife ❼ in **A** direction and set up the guide spring ⓯ position so that its bottom edge matches the knife edge ❼.

23.2. Turn the sliding knife ❼ in **A** direction and set up the position of the knife ❻ so that they touch evenly and there was no play between them. adjust the top knife edge ❻ so that it is flat with the knife ❼.

23.3. Align the springs ⓲ and ⓱ with the knife ❻ (spring offset ⓰ is on the site facing the knife ❻). Tighten the screws ⓲. Set the pin ⓴ so that it sticks out at the bottom knife side ❼ 1,8 - 2 mm.

23.4. Loosen the screews ㉕. Adjust the holder with the knife ❻ in **B** direction so that the fixed knife ❻ touches the knife ❼ about 2 - 3 mm from the edge (pin lines with the knife front ❻). The bigger the distance, the higher the pressure on the knife edge. The smaller the distance, the lower the Đ
Tighten the screws ㉕.

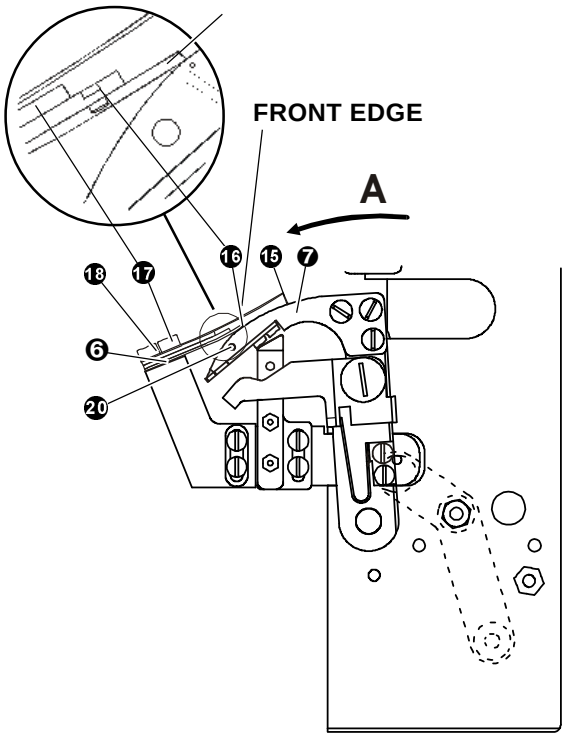

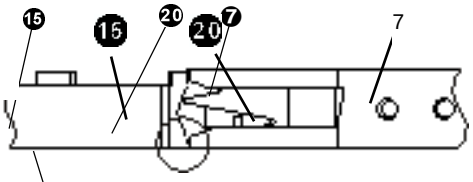

ALIGN WITH THE EDGE

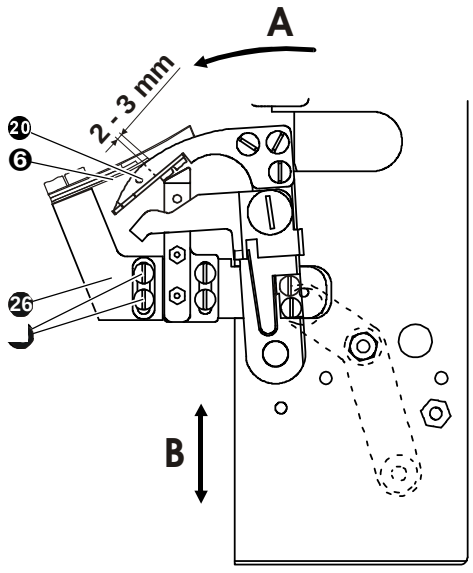

Released 04/2012
E-mail: service@amfreece.cz; parts@amfreece.cz; website: www.amfreece.com
Phone: +420 582 309 286; Fax: +420 582 360 606

E - STANDARD MACHINE ADJUSTMENT

24. BOTTOM THREAD HOLDER ADJUSTMENT - LTT

Loosen the screws ⓳. Turn the sliding knife ❼ in **A** direction so that the knife front ❻ matches the knife edge ❼. Then set up the play **C** as small as possible (approx.1 mm) between the guiding plate ❶ and holder ❷ in the direction of the arrow **D**. Make sure that the play **E** between the knife ❻ and the screw ⓳, at the point of the knife front ❻ the mark on the knife ❼. Tighten the screws ㉔.

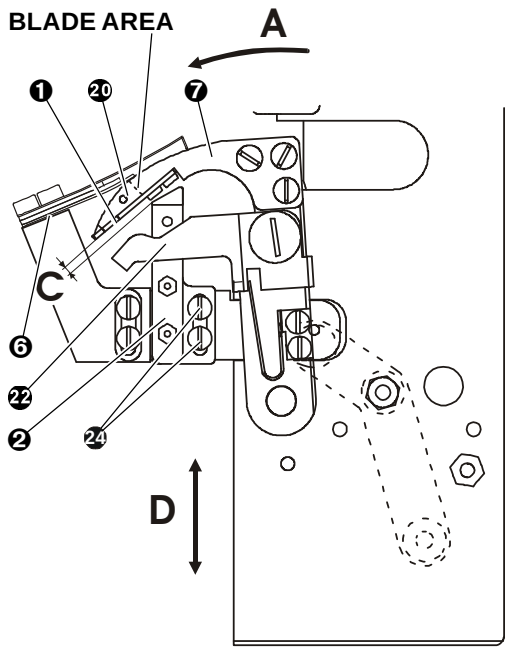

24.1. Bottom thread holder opener:

Turn the moving knife ❼ in **A** direction so that the knife front ❻ matches the knife edge ❼. In this position the thread clamp ❸ is closed and does not let the bottom thread go.

24.2. LTT bottom thread guide:

Loosen the screws . Turn the moving knife ❼ in **A** direction so that the knife front ❻ matches the knife edge ❼.

Align the leading plate ❷ with grasping fixing plate ❽ in vertical direction **F**.

You can align the plates with the help of spacers ㉕ (19.0081.5.451). Then tighten the screws .

Make a buttonhole sample and make sure that the bottom thread is guided into the holder ❸ and the gimp into the holder ❹.

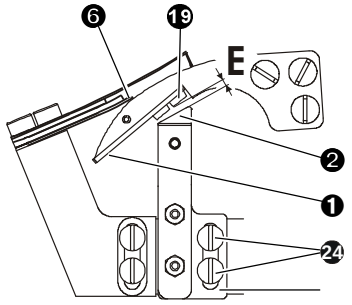

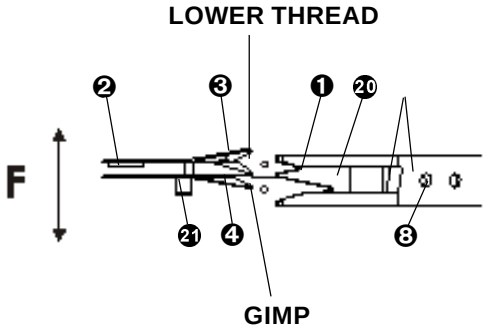

25. UPPER THREAD NIPPER MECHANISM

The thread nipper is a standard equipment delivered with **LTT**, **CT** and **CT/RDE** machines. It can be ordered for any version of **ES-505** machine**.**

Procedure:

25.1. To make the adjustment it is necessary to have the nipper in the home position.

25.2. Set up the play 0,5 mm between the nut ❶ and the nipper holde ❷.

25.3. When the nipper pneumatic cylinder ❺ is moved out, adjust the distance between the nipper arms ❻ and ❼ and the clamp plate ❹ by screwing or unscrewing the nuts ❸ and guiding shaft ❽ for 2 mm (for sewing thicker materials the distance can be increased).

25.4. In the machine home position adjust the nipper arms ❻ and ❼ so that it is in the centre of the needle or in such position that is ideal for starting sewing from the first part of the buttonhole and the thread end does not stick out.

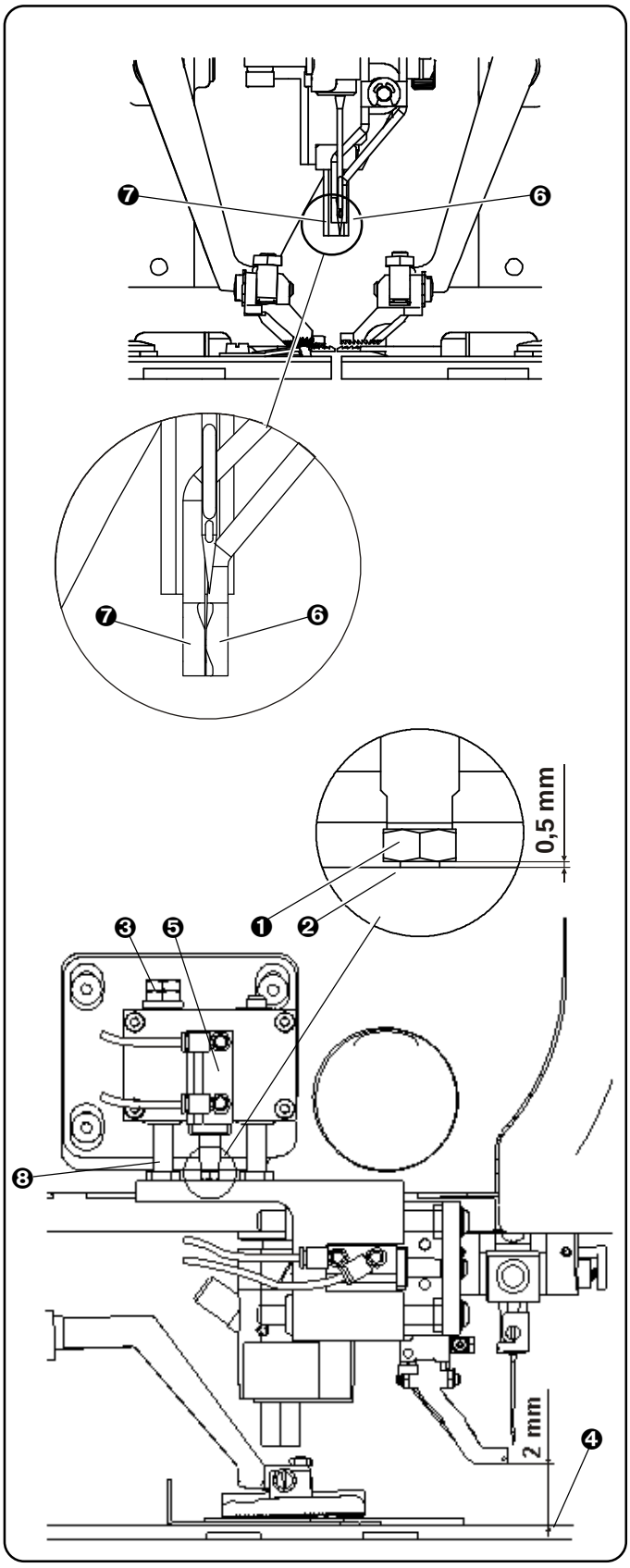

E - STANDARD MACHINE ADJUSTMENT

26. UPPER TRIMMING AND LOWER INTERCEPTION - CT

26.1. Once the knife holder ⓭ is fitted with the trimming knife ❶ adjust the height 0,2 mm from the throat plate ❸. The knife holder ⓭ must not go over the thrread catcher ❸.

26.2. Trimming knife home angle ❶ is adjusted by the screw ❽ so that the right edge of the knife holder ⓭ matches the throat plate edge ❸. The knife holder ⓭ must lean against the front side of the throat plate ❸, so that it catches and holds the bottom thread for another button hole. During the trimming knife ❶ movement the thread catcher ⓭ must go through the throat plate ❸ freely. Unscrew or nut ❼ in the adjusting screw ❻ to adjust the holding force. Tighten the nut ❼.

26.3. The position of the knife ❶ to catch the upper thread loop can be changed once you loosen the screw ❺. The knife edge ❶ must be 0,9 mm from the needle ❻. When you change the knife position ❶ it is necessary to check the height to keep the play as in chapter **E 23.3**., **23.4.**

26.4. Adjust the knife end position ❶ with the stopper screw ⓾. Make sure that the trimming knife ❶ does not catch the bottom thread.

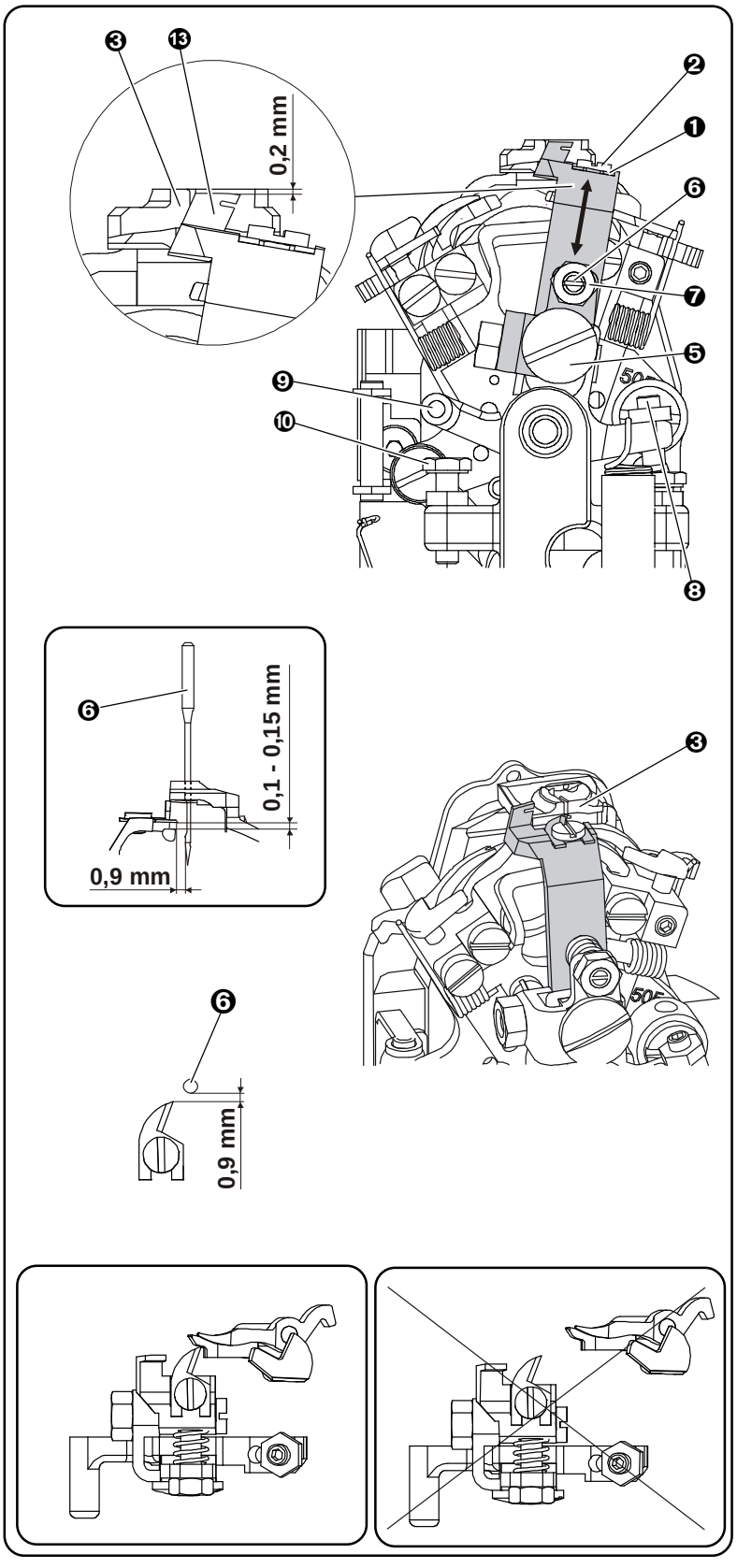

27. CT KNIFE REPLACEMENT AND ADJUSTMENT

27.1. Knife replacement and adjustment

Unscrew screws ❶ and remove the knife upper cover ❷.

Unscrew the screw ❽.

Take out the screw ❹ with the washer ❺. Remove the upper knife ❻ and lower knife ❼.

Install new knives and put the screw ❹ with the washer ❺ back.

Adjust the cutting pressure as in chapter **E 26.2.** and then tighten the screw ❸.

Put the knife upper cover ❷ and tighten the screws ❶.

27.2. Cutting pressure set up

Loosen the screw ❽.

Turn the screw ❹ to adjust the knife cutting pressure and then tighten the screw ❽.

Note:
If the screw ❹ is too tight, the thread trimming will not function. Therefore loosen the screw ❹ to the point where the knives are slightly turned and the trimming functions well.

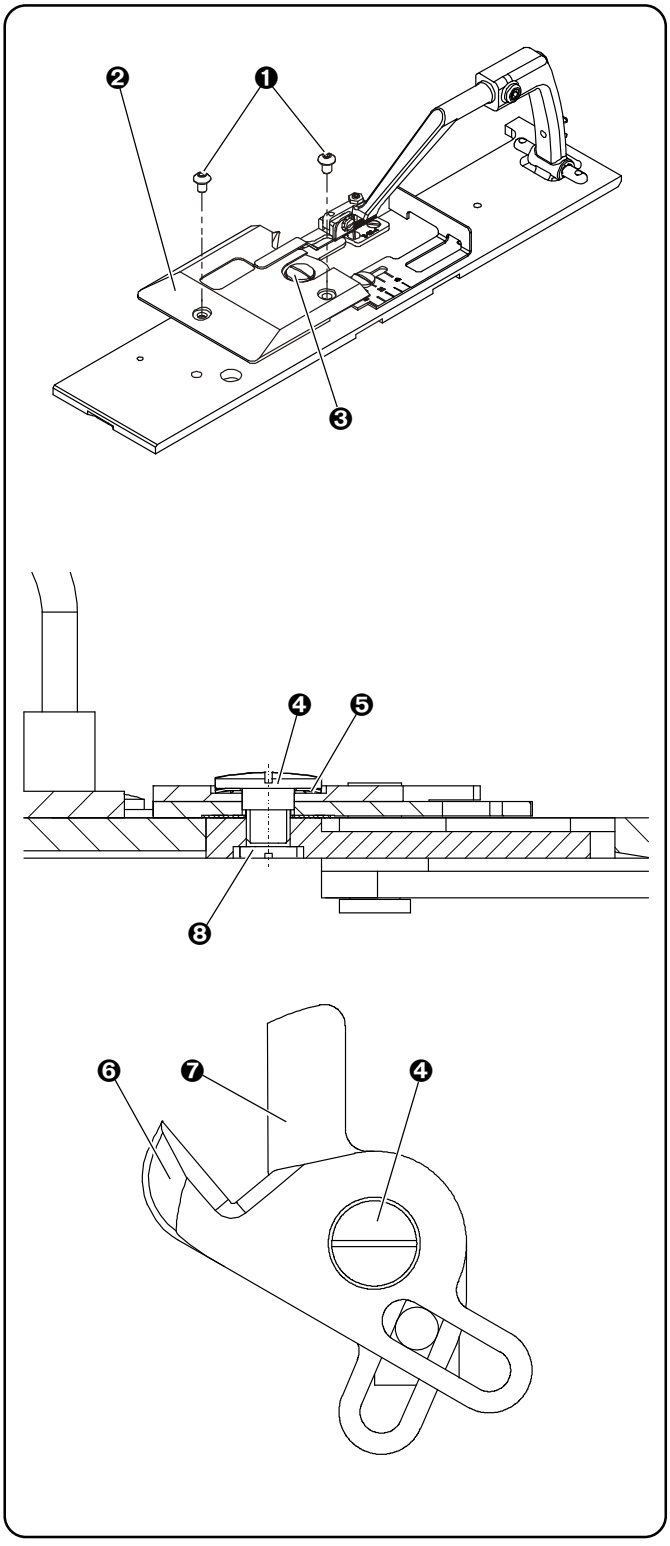

Released 04/2012
E-mail: service@amfreece.cz; parts@amfreece.cz; website: www.amfreece.com
Phone: +420 582 309 286; Fax: +420 582 360 606

E - STANDARD MACHINE ADJUSTMENT

28. CLAMPING FEET

28.1. Sheers adjustment

Loosen the screws ❷ and ❸. Adjust the trimming sheers carefully to 3,8 mm from the clamping plate ❶ surface. Tighten the screw ❷ and try trimming on the free thread.

If the trimming is not sufficient, reduce the gauge from 3,8 mm to 3,5 mm. The scissors must move freely. The edge must not be damaged with scratches. If the scissors do not cut even at the 3,5 mm, check the edge and make sure that they come back to the home position.

28.2. Bottom thread trimming and gimp trimming mechanism

Adjust the operating rod ❹ to 33,5 mm from the pneumatic cylinder ❺. Adjust the securing screw ❻ (secured with LOCTITE 243) to a minimal play 0,05 mm so that the rod ❹ can move freely.

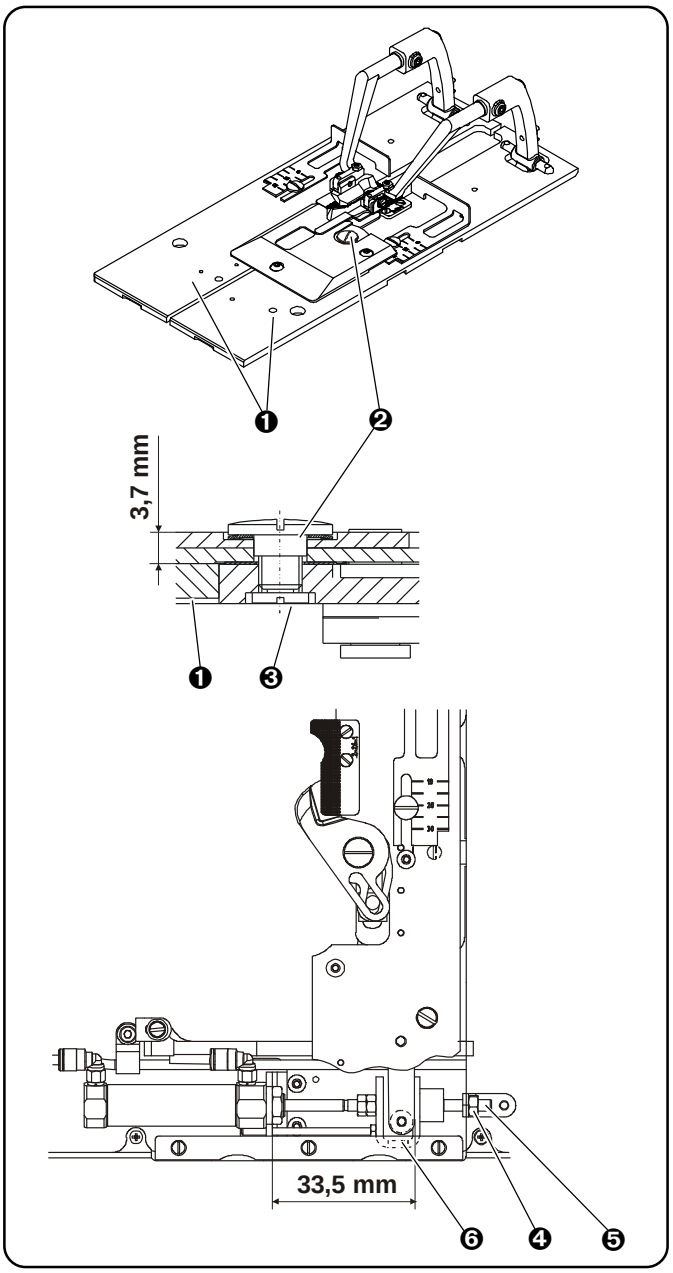

E - STANDARD MACHINE ADJUSTMENT

29. SPREADERS AND THREAD TENSIONER ADJUSTMENT

NOTE!
It is necessary to adjust the thread tension with any change of material or thread. Since the quality of threads affects the results of sewing machines, it is necessary to use threads of good quality and smooth.

CAUTION!
If you change any part that touches a thread and affects its smooth flow, check its smooth surface. jeho povrchu.

29.1. Upper thread

Recommended thread tension			
Material	Thin (1 layer)	Cotton (2 layers)	Denim (4 layers)
Threads used	No. 120	No. 70	No. 50
Needle	579 / Nm 100	579 / Nm 100	579 / Nm 100
Upper thread tension (N)	1,2	1,7	2
Bottom thread tension (N)	0,2	0,7	1,7

Turn the tensioner nut ❶ clockwise to increase the upper thread tension and anticlockwise to reduce it.

Turn the auxiliary tensioner nut ❷ clockwise to increase the upper thread tension and anticlockwise to reduce it.

Secure the position of the auxiliary tensioner ❷ with the lock nut ❸. This tensioner affects the remaining thread length at the needle and therefore the quality of upper thread trimming.

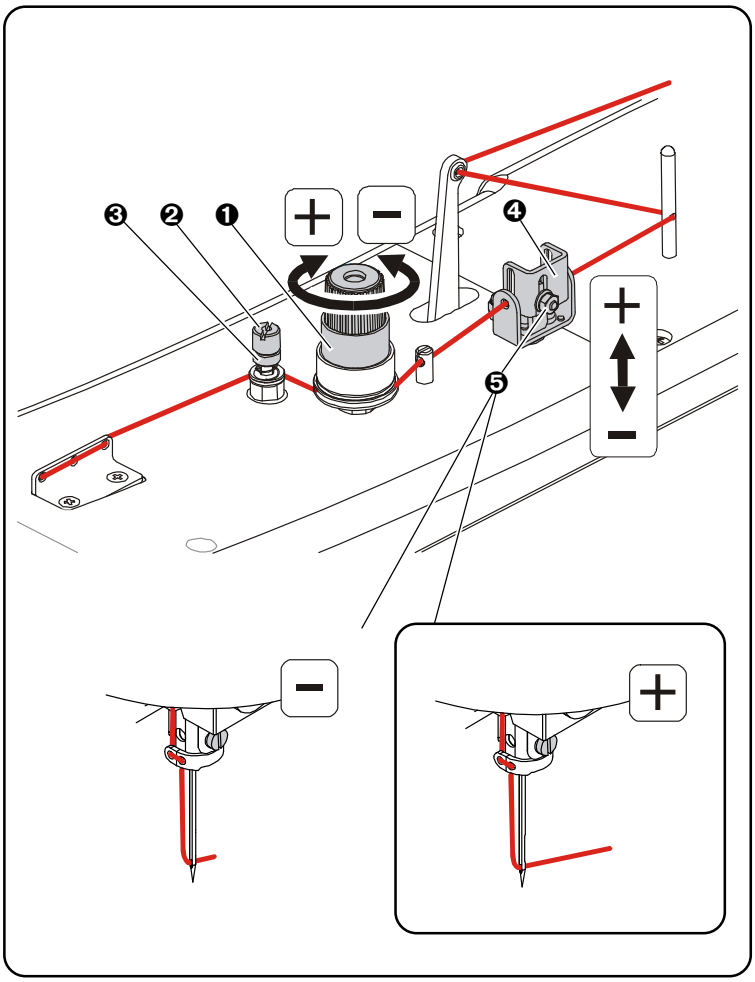

CAUTION!
If the tensioner is too loose, the upper thread may not be trimmed.

The size of upper thread tension is affected by the position of the guide ❹ once the nut ❺ is loosen.

The position of the guide ❹ affects the remaining length of the thread at the needle.

CAUTION!
If the remaining thread at the needle is not long enough, the first stitches at the beginning of sewing may not be sewn.

Released 04/2012
E-mail: service@amfreece.cz; parts@amfreece.cz; website: www.amfreece.com
Phone: +420 582 309 286; Fax: +420 582 360 606

E - STANDARD MACHINE ADJUSTMENT

29.2. Bottom thread

Turn the tensioner nut ❶ clockwise to increase the upper thread tension and anticlockwise to reduce it.

For **AF** machine it is not necessary to set any bottom thread tension.

For CT and LTT version it is necessary to have the loose bottom thread ❷ long enough ❷, which making pneumatic cylinder.

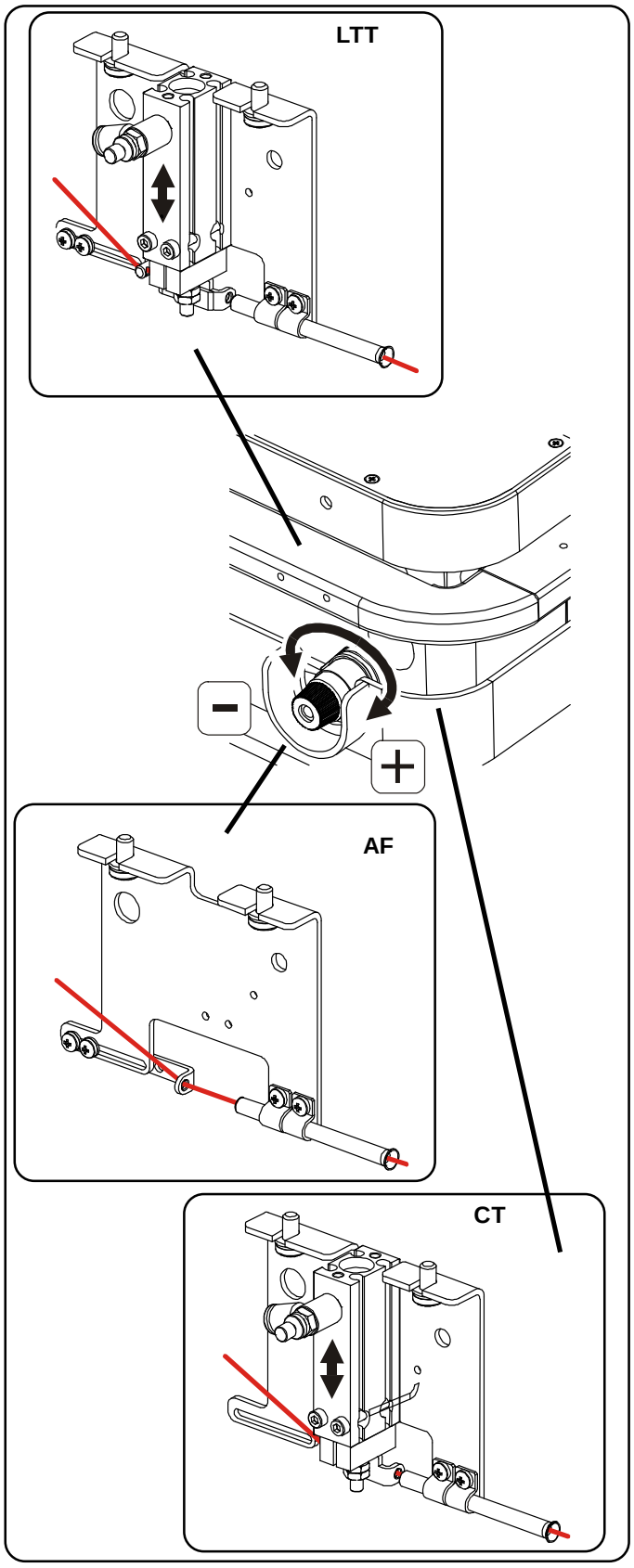

E - STANDARD MACHINE ADJUSTMENT

29.3. Gimp

Turn the tensioner nut ❶ clockwise to increase the upper thread tension and anticlockwise to reduce it. Gimp tension is in operation only with CT version to adjust the gimp length coming out the stitch plate.

CAUTION!
Tension tight too much in the tensioner can cause deformation of a buttonhole in the eye.

It is not necessary to adjust any bottom thread tension at **AF** versions.

CT and **LTT** versions need to have gimp sufficiently released, which ensures the pneumatic cylinder ❷ and release lever ❸. The length of the release gimp can be adjusted by the side guide ❹. To change the position of the guide ❹ loosen the screws ❺ and move the guide ❹ to the required position . Tighten the screws ❺.

Note:
At **CT** versions set up the thread tension and droof so that the minimal gimp length coming out the stitch plate ❻ is 4 mm.

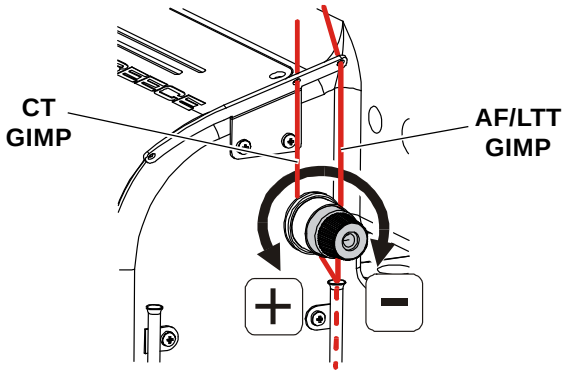

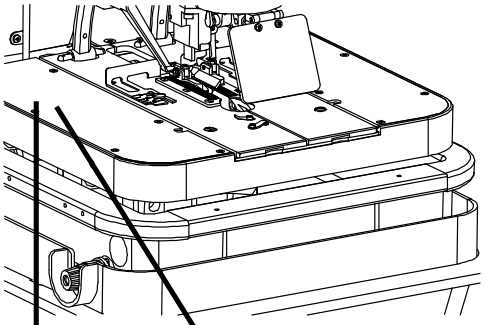

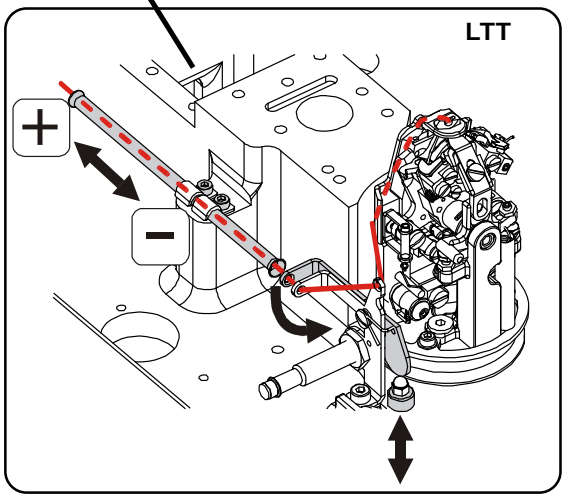

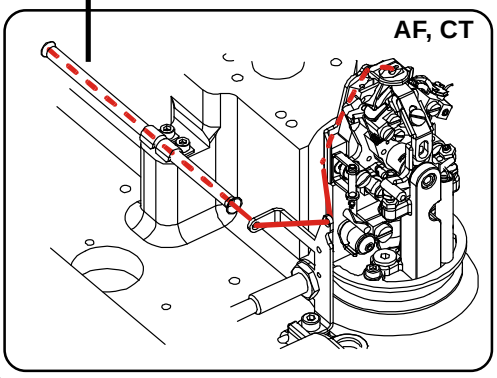

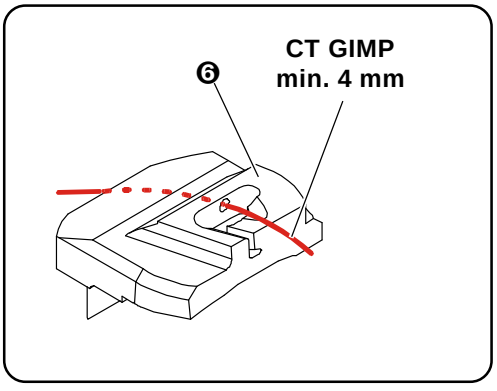

Released 04/2012
E-mail: service@amfreece.cz; parts@amfreece.cz; website: www.amfreece.com
Phone: +420 582 309 286; Fax: +420 582 360 606

F - MACHINE MAINTENACE

WARNING!
- *Check the condition of electric cables regularly! Make sure they are not damaged!*
- *Check that there are no damages on the safety covers. Change damaged covers for good ones or order them!*
- *Do not put fingers into the area of sewing needle or cutting mechanism under any circumstances!*
- *Do not modify the machine in any way that could limit safety components!*

CAUTION!
- *Do not miss out doing regular maintenance.*
- *If there is power system breakdown, switch off the main power switch.*
- *Do not remove, modify or remove safety labels.*
- *Do not work on the machine intoxicated or impaired.*
- *Make sure that lighting equipment for the working area does not exceed 750 Lux.*

1 . MACHINE CLEANING AND MAINTENANCE

CAUTION!
Before you start the maintenance or cleaning, switch off the power supply and disconnect the air supply from the machine!

1.1. Daily cleaning and checking

To ensure machine long life and reliability, it is important to apply below mentioned steps on daily bases after work shift.

1.1.1. Sewing mechanism cleaning

CAUTION!
Use tweezers that are in the accessories, to remove thread and fabric trimmings. Do not use the air brush because some remains may stuck in the sewing mechanism and that would make the sewing quality worse.

Procedure:

a) remove clamp plates ❶ from the nachine.

b) Move bed plate manually ❷ forward to front position.

c) remove threads and fabric remains from the sewing area into the pocket ❸ in the machine frame. Check guides and tensioners along the thread line for any remains or filth – see chapter **C1.2.-1.5.**

d) remove knife ❹ and check the knife edge for any damage. Make sure that the waste hole in the knife holder ❺. is not blocked. Put the knife back into its place.

e) Ultraflex model – remove thread remains from sliding screw ❻ in the cutting steel mechanism.

f) Bring the bed plate back into home position.

f) Loosen safety screw ❼, placed on the left on the frame and lift up the machine head.

g) Remove filth from the frame pocket ❸ and bring the sewing head back into home position.

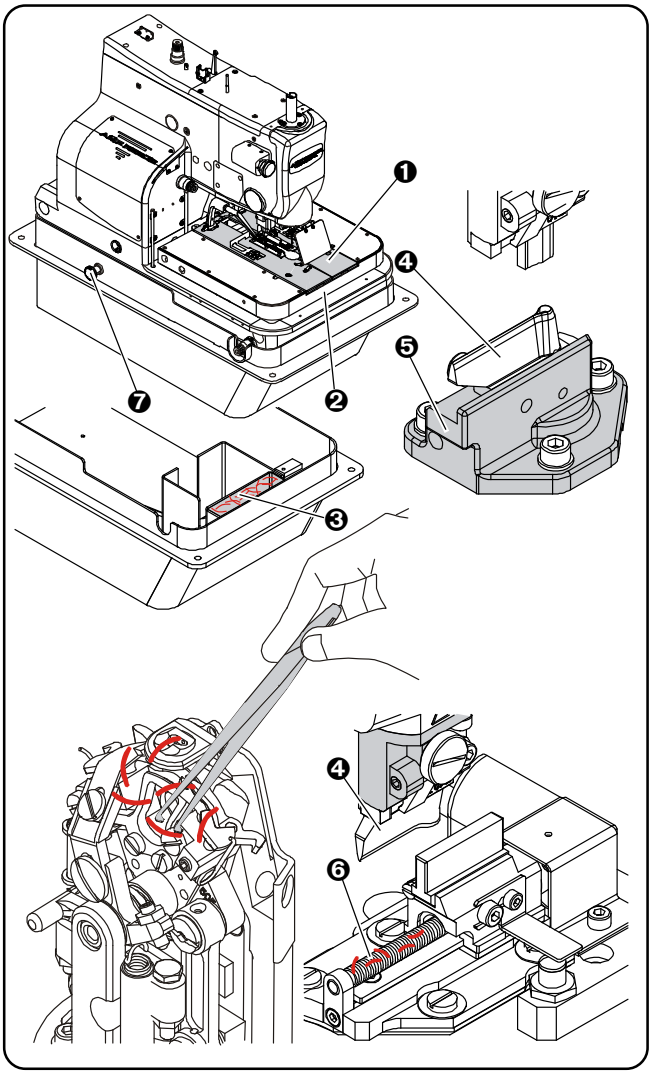

1.1.2. Filter unit cleaning and maintenance

a) Connect the machine to the air supply.
b) Check the level of condensation ❶ in the reservoir ❷. The liquid level must not get more than 10 mm under the filter sleeve ❸. The height is marked by the lowest nut ferrel ❹.
c) Press drain valve ❺ and drain condensation out ❶.
d) Disconnect air supply.

In case of airflow decline, replace the filter sleeve ❸.Filter sleeve must be changed after two years of machine operation at the latest or every time the pressure drops down to 0,1MPa.

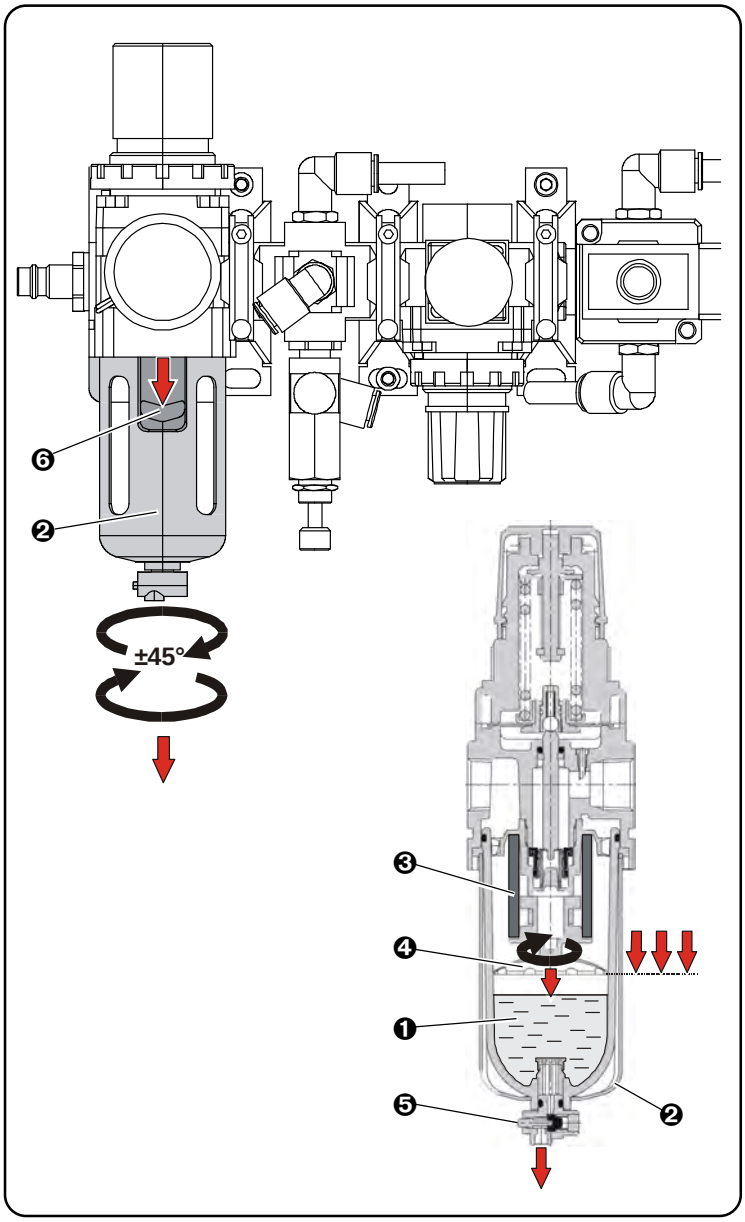

How to exchange filter sleeve:

c) Push latch ❻ in the direction of the arrow and turn reservoir ❷ of 45° any side you like.
d) Pull reservoir ❷ out in the direction of the arrow.
e) Loosen nut ❹ by turning it counter-clockwise.
f) Remove filter sleeve ❸ and put new one.
g) Put filter together.

1.1.3. Needle check

a) Loosen screew ❶ and take needle out ❷.
b) Check that needle tip is not damaged
c) Roll the needle on the flat board to see whether the needle is not bent
d) Replace the needle with a new one if damaged or bent!
e) After checking put the needle ❷ back into machine – see chapter **C1.1**.

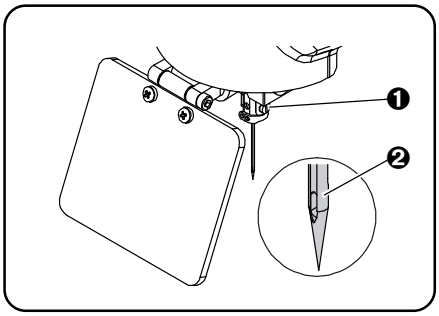

F- MACHINE MAINTENANCE

1.2. Cleaning and checking as needed

Apply instructions bellow as needed with regard to machine production workload.

1.2.1. Control box

Use vacuum cleaner to clean control box ❶ filter sleeves ❷.

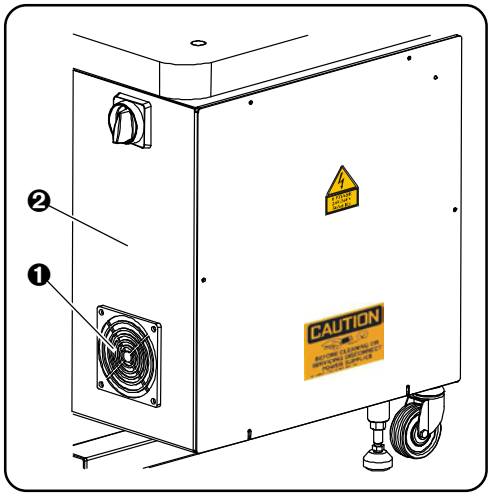

1.2.2. Draining lubrication oil out

Check the oil tank ❶ under the machine. If it is full of oil, remove the tank by turning it clockwise and used oil empty out. Put the tank back onto its place.

NOTE!
Disposal of the used oil must correspond with ecological standards!

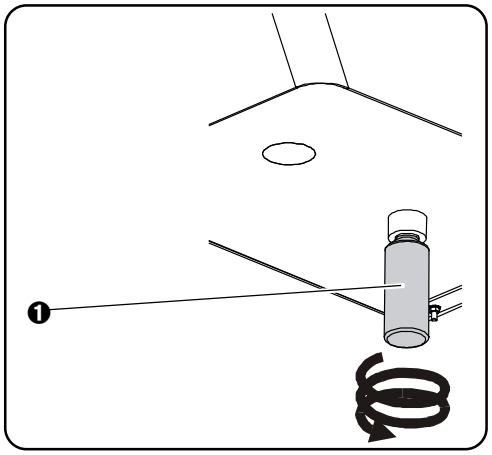

1.2.3. Eye safety cover

Clean the eye safety covers ❶ with wet cloth.

NOTE!
Do not use any aggressive cleaning solutions, i.e. paraffin oil, etc.! They may create color stains on the safety cover and cause bad transparence.

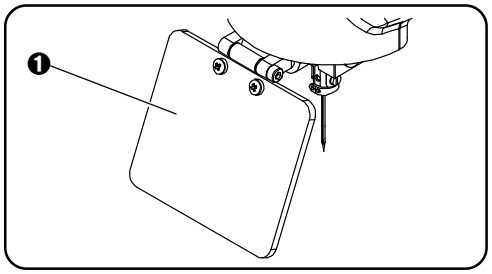

1.2.4. Lubrication

Lubricate the machine as recommended in chapter **C2.**

1.2.5. Battery replacement

a) If the diplay shows the error message  - see chapter **D 4.3**., it is necessary to check the battery connection, or to replace the battery.

b) Battery lifetime is guaranteed for 5 years at the temperature of 25°C. Higher temperatures significantly reduce the lifetime of the battery (at 55°C it is only1,5 years).

c) In order not to lose data, it is important to replace battery within 5 days from the first indication. This period can be prolonged if the machine stays switched on.

When replacing the battery, make sure you do the following:

a) Never shorten the connector from the battery in the PLC. Never charge the battery. Never break the battery. All these may cause the battery loses its lifetime, it may set fire or damage the battery cover and fail the guarantee.

b) Never use a battery that fell down or got hit in another way. Replace the battery only when the power supply is disconnected. When the battery is disconnected, the data keep saved for 5 minutes. After this period the data may get lost. The battery can be replaced by an instructed mechanic only. If the machine is not in operation for longer time, the lifetime of the battery shortens.

Note:
The error message showed in chapter **D 4.3.**will be automatically deleted when a new battery is placed in.

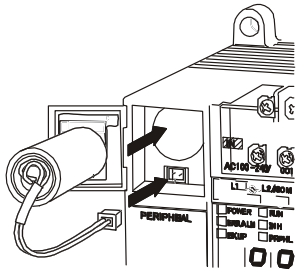

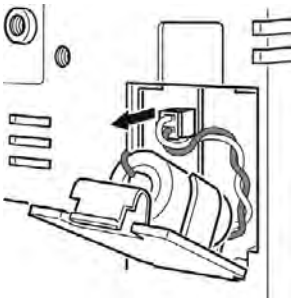

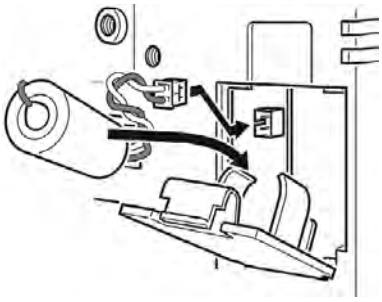

F- MACHINE MAINTENANCE

2. MAINTENANCE LIST

Maintenance list		
Once a day	**10 hours**	Clean sewing mechanism area
		Clean frame area
		Check cutting knife edge
		Check waste hole in the cutting block
		Clean sliding screw in cutting block mechanism (Ultraflex)
		Check level of condensate in regulator filter
Once a week	**80 hours**	Lubricate needle bar and sewing mechanism
		Lubricate sliding block mechanism (Ultraflex)
		Recharge oil into oil tanks
Once a month	**300 hours**	Check sewing mechanism drive play
		Check filth in filter sleeves in control box
		Check tank and waste oil
		Check screw joints tightness (keep values below)

Recommended values for screws freeze (Nm)			
		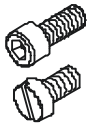	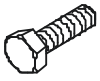
M3	**0,5**	**0,6**	**0,8**
M4	**1,2**	**1,5**	**2,0**
M5	**2,5**	**3,0**	**4,0**
M6	**4,0**	**5,0**	**7,0**
M8		**8,0**	**16,0**
M10		**10,0**	**30,0**

3. MACHINE DISPOSAL

3.1. To make sure the machine is disposed ecologically, it is necessary to remove all nonsteel parts from machine. Once such parts are removed, partial disassembly is needed, covers be removed, machine arm dismantled and machine pulled out from the frame.

3.2. Separate aluminum parts, hard aluminum parts, non-ferrous metal parts and plastic parts and have them processed separately.

3.3. Parts mentioned in ad) 3.2 are listed in spare parts manual and market as follows:

- ● Aluminium and hard aluminium parts
- ●● Non-ferrous metal parts
- ●●● Plastic and non-steel compositions

G - DOCUMENTATION

1. PNEUMATIC DIAGRAM

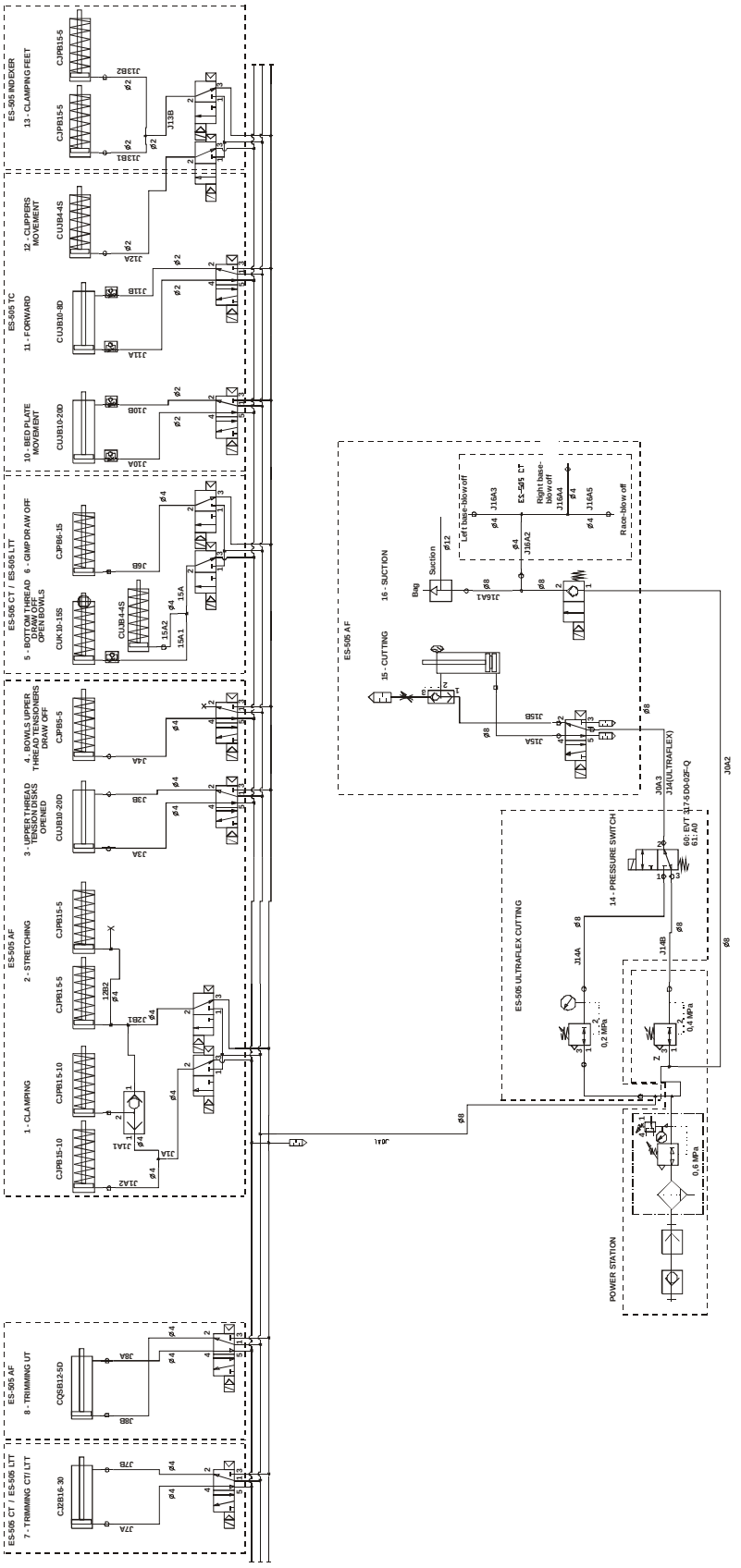

Released 04/2012
E-mail: service@amfreece.cz; parts@amfreece.cz; website: www.amfreece.com
Phone: +420 582 309 286; Fax: +420 582 360 606

G - DOCUMENTATION

2. ELECTRICAL DIAGRAM

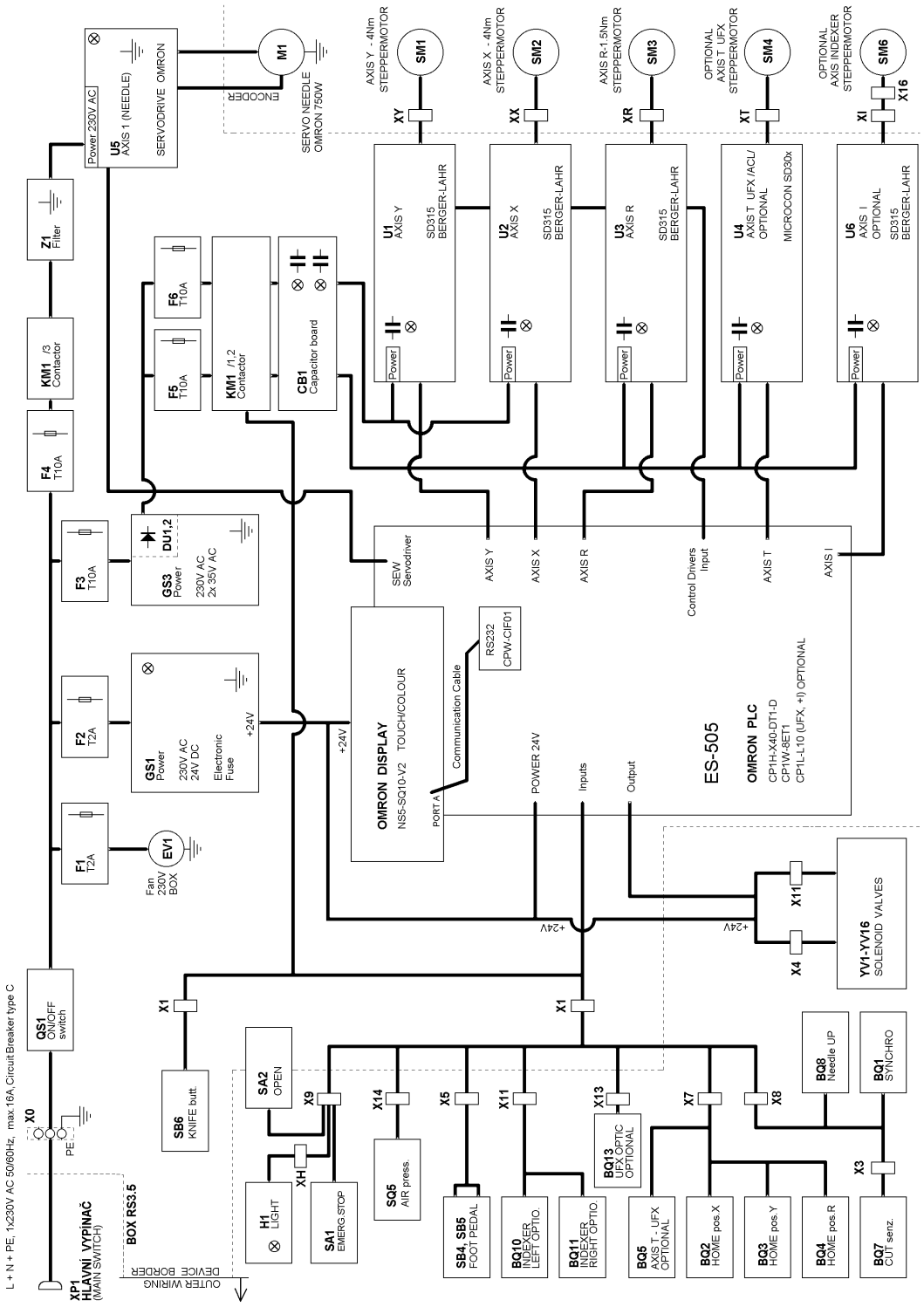

TROUBLESHOOTING

CONTENT

Page

1. INTRODUCTION 2- 2

1.1. LIST OF FAILURES INDICATED ON THE DISPLAY 2- 2

1.2. LIST OF VALUES FOR MECHANISM SETUP 2- 3

2. FAILURES INDICATED BY ERROR 2- 4

3. ELECTRICAL FAILURES 2- 7

3.1. FAILURES BY ERROR MESSAGES ON THE DISPLAY 2- 7

3.2. FAILURES OCCURING AFTER MACHINE STARTUP 2- 11

3.3. ELECTROMAGNETIC VALVE SWITCHING FAILURE 2- 13

3.4. INDUCTION SCANNING SENSOR FAILURE 2- 14

3.5. AXIS MOVEMENT / STEPPER MOTOR FAILURE 2- 15

3.4. FOOT PEDAL FAILURE 2- 16

TROUBLESHOOTING

NOTICE!
It is recommended by the manufacturer to use AMF REECE original parts only, especially needles, loopers, spreaders, and throat plate!
If the service check during the guarantee period reveals that recommendations are not followed, any repairs will be charged to the customer!

1. INTRODUCTION

ES-505 the electronic buttonhole machine is equipped with error message signalization when the machine breaks down. Error messages are shown in the left hand top corner of the control display. If no error message shows up and the machine is faulty, follow ad) **2** of this section. For other signaled failures see detailed descriptions in the following section.

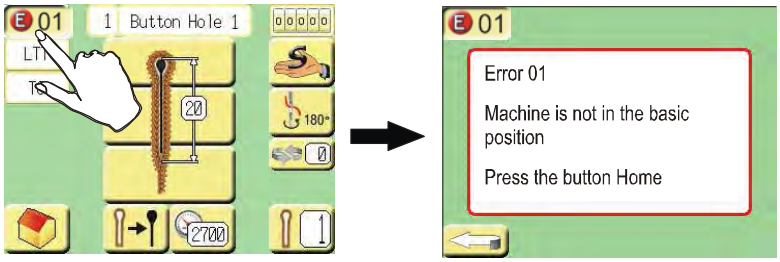

1.1. List of faults indicated on display

Follow messages shown on the display, or see detailed description in chapter **3** for troubleshooting.

Error 01 – Machine not in home position, press HOME button

Error 02 – Needle not in upper position, turn hand wheel to bring it into correct position

Error 04 – Low air pressure, check connection and air distribution

Error 05 – Cutting lever during cutting faulty

Error 06 – Cutting lever not in home position

Error 07 – Not used

Error 08 – Machine opened, close machine

Error 10 – S axis faulty not in home position

Error 11 - X axis faulty not in home position

Error 12 - Y axis faulty not in home position

Error 13 – R axis faulty not in home position

Error 14 – Servo drive adjustment time ran out, check servo driver sensors home position

Error 15 – X axis adjustment time ran out, check sensor and X axis stepper motor

Error 16 - Y axis adjustment time ran out, check sensor and Y axis stepper motor

Error 17 - R axis adjustment time ran out, check sensor and R axis stepper motor

Error 18 – indexer I axis adjustment time ran out, check sensor and stepper motor

Error 19 - T axis adjustment time at UFX ran out, check sensor and stepper motor

Error 20 – Servo-driver error, check the servo-driver

Error 21 – Stepper motor U1, U2, U3, U6 error

Error 25 – Servo-driver recovery time, please wait (max. 11 sec)

Error 30 – Communication blackout between PLCA and PLCB, check PLC communication cable

Error 40 – Machine in service mode

Error 50 – Parameter setting error

Error 51 – Buttonhole length setup incorrect

Error 60 - Indexer – buttonhole parameters setup incorrect

Error 61 - Indexer – total buttonhole length setup incorrect

Error 62 - Indexer – BH distance setup incorrect

Error 70 – Ultraflex moving into cutting position

Error 99 – Emergency stop, release E-stop button

1.2. List of values to set up mechanisms

Note:
Machine setup can be changed according to fabric type and thread. Correct setup decreases parts wear-out in the machine. Mechanisms, whose parts are fixed with yellow color, cannot be adjusted in the warrantee period without an approval of the manufacturer.

Setups of the manufacturer:

- distance between needle and loopers 0,05-0,1mm (0,002-0,004 inch)

- play between needle and needle rest 0,05-0,1mm (0,002-0,004 inch)

- both left and right loopers are in the centre of the needle at 2,8mm stroke (0,11 inch) from the bottom dead point

- distance of needle from left spreader groove in the moment of needle leaving left looper is 0,6mm (0,024 inch)

- maximal allowed axial play of needle bar in the bottom dead point with 5N force is 0,25mm (0,01 inch)

- maximal allowed radial play of needle bar in the bottom dead point with 5N force is 0,05mm (0,002 inch)

    - loopers holder axial play 0,05-0,1mm (0,002-0,004 inch)

    - loopers holder radial play 0,05-0,1mm (0,002-0,004 inch)

    - loopers holder angle play 0,2-0,3mm (0,008-0,012 inch)

    - distance between screening and sensors BQ1, BQ2, BQ3, BQ4, BQ5, BQ8, BQ10,BQ11 0,2-0,3mm (0,008-0,012 inch)

- main air regulator setup - 0,6MPa (6 bar; 87 PSI)
  Regulator for buttonhole cut with eye setup - 0,5MPa (5bar; 72,5 PSI)
  Regulator for eye cut setup - 0,25-0,3MPa (2,5-3bar; 36-43,5 PSI)

TROUBLESHOOTING

2. FAILURES NOT INDICATED BY ERROR MESSAGE

If you have a problem with sewing, first check threading and that the needle is installed correctly in the needle bar.

Before you call a service mechanic, check the machine as follows.

If you are not able to solve the problem with the following instructions for troubleshooting, switch the machine off and discuss the problem with a qualified technician at the place you bought your machine.

WARNING!
Switch the main switch off and disconnect the machine from power supply.
Unless you do that, the foot pedal can be accidentally pressed down during the service and cause a severe bodily harm.

Problem	Cause	Solution	Manual section
Broken thread	Tensioners are too tight.	Adjust correct thread tension.	E 27
	Needle is adjusted incorrectly.	Adjust needle correctly.	C1
	Thread for needle too thick.	Use either thinner thread or different needle size.	E 20, C 1
	Needle and loopers setup is incorrect.	Check plays between needle and loopers, needle bar height or spreader setup.	E 13 - E 16
	Broken needle, loopers, spreaders or throat plate.	Change broken parts.	
	Openings and sewing and thread holes filthy.	Remove filth and dirt and from openings and holes.	F 1.1.1
	Thread incorrectly threaded.	Check thread trace.	C 1.3 C 1.4 C 1.5
Thread broken at the end sewing	Position of upper thread trimming knife incorrect	Adjust the knife into correct position.	E 17
Skip stitch	Upper thread tension is too big	Adjust correct thread tension.	E 20
	Broken, bent or incorrectly installed needle	Check the needle and replace with new one if necessary	C 1 F 1.1.2
	Needle and loopers adjustment incorrect	Check adjustment of needle, loopers, needle bar height or spreaders.	C 1 F 1.1.2
	Incorrect play between needle and needle rest	Adjust correct play.	E 15
	Broken or cracked spreader springs	Replace springs.	

TROUBLESHOOTING

Problem	Cause	Solution	Manual section
Skip stitch	Incorrect adjustment of clamp foot.	Check clap feet overlap against washers.	E 9
Broken thread	Needle is bent.	Check needle and replace if necessary.	C 1 F 1.1.2
	Incorrect adjustment of play between needle and loopers.	Adjust correct play.	E 15
	Needle and loopers adjustment is incorrect.	Check adjustment of needle, loopers, needle bar height or spreaders.	E 13 - E 16
	Incorrect play between needle and needle rest.	Adjust correct play.	E 13
	Needle is too thin.	Choose suitable needle according to application sewn.	C 1.1
Top thread not trimmed	Top thread trimming knife is not sharp.	Replace knife with new one.	E 18
	Top thread trimming knife does not come back.	Check reverse spring, replace if necessary.	
	Incorrect position of top thread trimming knife.	Adjust knife into correct position.	E 18
	Low tension of auxiliary top thread tensioner.	Increase tension by turning tensioner clockwise.	E 27
Bottomthread not trimmed	Sliding knives (CT, LTT) are not sharp.	Replace knives with new ones.	E 24 E 25
	Sliding knives (CT, LTT) are in incorrect position.	Check and adjust knife position and (LTT) holder.	E 21, E 24, E 25
Skipped stitches at the beginning of sewing	Top thread i too short after trimming.	Increase size of top thread.	E 27.1
	Auxiliary tensioner is too tight.	Lower tension by turning tensioner anticlockwise.	E 27.1
	Bottom thread held incorrectly.	Adjust bottom thread nipper (LTT) or bottom thread holder (CT).	E 23 E 21
	Play between loopers and left spreader adjusted incorrectly.	Check spreaders and loopers play.	E 15 - 16
Material is improperly cut	Cutting pressure is too low.	Adjust pressure on regulator of cutting for 0,5 MPa.	E 11.4
	Knife and cutting block are not parallel.	Grind cutting block to be flat or change it!	E 11 - 12
	Visible damage on cutting block.	Grind cutting block to be flat or change it!	E 12.2

TROUBLESHOOTING

Problem	Cause	Solution	Manual section
Material is improprly cut	Knife edge is not sharp enough or is damaged.	Replace knife with new one.	E 12
	Cutting cylinder sensor reverses cutting lever too early.	Check sensor position.	E 11.4
	Cutting delay period too short.	Incerase perod value.	D 2.4 D 2.5 D 2.6.2 D 2.6.3
Top thread nipper does not pull up top thread	Top thread trimming knife not sharp.	Replace knife with new one.	E 12
	Low tension of auxiliary top thread tensioner.	Increase tension by turning tensioner clockwise.	E 27.1

TROUBLESHOOTING

3. ELECTRICAL FAILURES

3.1. FAULTS INDICATED ON DISPLAY BY ERROR MESSAGES

E-99 Emergency Stop	Signalization input: PLC-A input **0.08**	
Fault	**Cause**	**Troubleshooting**
Emergency Stop	1. STOP button is switched.	Release it by turning it.
	2. STOP button does not switch.	Check or replace the button SA1 - 12.0010.4.191.
	3. Faulty input PLC-A 0.08.	Check signal on PLC-A input, replace PLC 06.8015.0.001.

E-04 Low Air Pressure	Signalization input: PLC-A input **1.00**	
Fault	**Cause**	**Troubleshooting**
Low air pressure signalization	1.Air valve closed.	Open supply air valve.
	2.Low air pressure.	Regulate air pressure - technician at the workshop.
	3.Air switch not adjusted.	Adjust air switch controller.
	4.Air switch defective.	Check or replace the switch SQ6.
	5.PLC-A input defective 1.00.	Check signal on PLC-A input, replace PLC 06.8015.0.001.

E-08 Cover switch	Signalization input: PLC-A input **0.10**	
Fault	**Cause**	**Troubleshooting**
Switch opening machine	1. Machine is opened.	Close machine.
	2. Interlock sitch controller SA2 for machine opening is not adjusted.	Adjust contact making of SA2 switch. The switch has to make contact once the machine is closed.
	3. Faulty switch SA2.	Check or replace switch SA2 - 06.0120.0.000.
	4. Faulty input PLC-A 0.10.	Check signal on PLC-A input, replace PLC 06.8015.0.001.

TROUBLESHOOTING

E-15 a• E-19 Stepper motor position time		
Fault	**Cause**	**Troubleshooting**
Time for stepper motor to get into right position (HOME Position) of given axis ran out: E15-axis X E16-axis Y E17-axis R E18-axis I E19-axis T	1. Mechanical problems of given axis.	Try movements in given axis by manual jogging - remove / correct problematic spot.
	2. Transmission gear or belt of given axis is loose.	Push buttons on the display in machine tests to check movements in given axis - correct problematic spot.
	3. Motor of given axis disconnected.	Check the connection of the stepper motor cable to the driver.
	4. STEP signal disconnected from PLC to stepper driver.	Check connection of STEP signal to stepper motor driver. Correct function of the motor can be tested on the display - machine testing.
	5. Faulty driver of stepper motor.	Replace driver 12.0010.4.161. ATTENTION - drivers can be interchageable, but they have different setups for individual axes (drive controllers).

E-20 Servodriver fault	Signalization input: PLC-A input **0.09**	
Fault	**Cause**	**Troubleshooting**
Neither servo-amplifer display U6	1. Not indicator lights up. Contactor KM1 is not switched.	Stop SA1 button is not switched, or interlock switch for machine opening SA2 is not open.
	2. Burnet fuse F4 - T10A	Replace fuse 12.0008.4.664. ATTENTION - line voltage!
	3. Faulty connection of servo driver supply connector	Check correct placement - connection of servo driver supply connector. ATTENTIO - line voltage!
	4. Faulty clamper contact KM1	Replace clamper 12.0008.4.833. ATTEN-TION - line voltage!
	5. Faulty servo-amplifier U6	Replace servo-amplifier. ATTENTION - line voltage!
	6. Faulty filter Z1	Check circuit, replace filter 06.1500.0.051.
Indicator flashing on servo-amplifier U6, or error message shovn on its display.	1. Fault by servo-amplifier error message	Switch machine off for more than 1 min and switch it in again. In case servo-amplifer still shows error, call service for help.

Released 04/2012
e-mail: service@amfreece.cz; parts@amfreece.cz; website: www.amfreece.com
Phone: +420 582 309 286; Fax: +420 582 360 606

TROUBLESHOOTING

E-20 Servo driver error	Signalization input: PLC-A input **0.09**	
Fault	**Cause**	**Troubleshooting**
Green indicator flashing on servo-amplifier U6 or display lights up, error not indicated, still servo driver does work correctly.	1. Not efficient connection of connector CN1 and cable with servo-amplifier	Check correct connection - connection of all servo.amplifier connectors, especially cable and conector CN1.
	2. Faulty setup of servo-driver parameters.	Unless it is possible to check and set up parameters manually, it is necessary to call service. (Servo-amplifier replacement.)
	3. Faulty input PLC-A 0.09	Check signal on PLC-A input, replace PLC 06.8015.0.001

WARNING !

⚠ *When working with line voltage, it is necessary to disconnect the machine from electricity system!*

⚠ *Repairs cn be carried out by an authorized person with electro-technical qualification only !*

E-21 Faulty stepper motors	Signalization input: PLC-A input **1.01**	
Fault	**Cause**	**Troubleshooting**
No indicator flashing on stepper motor driver and CB1condenser panel	1. Contactor KM1 does not make contact	Emergency stop SA1button not switched, or interlock switch for machine opening SA2 is open.
	2. Fuse F3 - T10A burnt	Replace fuse 12.0008.4.664
	3. Toroi transformer GS3 faulty	Check or replace transformer 12.0010.4.162
Only one green LED on CB1 condenser panel is on, none of driver indicator is on	1. Fuse F5 or F6 - T10A burnt	Replace fuse 12.0008.4.664
	2. Faulty contact on KM1contactor	Replace contactor 12.0008.4.833 ATTENTION - Line voltage!
	3. Faulty DU1 or DU2 rectifier	Replace rectifier 12.0008.4.770
	4. CB1 condenser panel faulty	replace panel CB1 12.0010.4.134

TROUBLESHOOTING

E-21 Faulty stepper motors	Signalization input: PLC-A input **1.01**	
Red light on/flashing at some of stepper motor driver.	1. Driver signaling breakdown.	Switch the machine off for more than 1 min and switch it on again. In case the drive still shows a problem, replace off for driver 12.0010.4.161, or call the service. ATTENTION - drivers can be interchangeable, but they have different for individual axes (driver controllers).

Green light on at all stepper motor drives.	1. Drivers signaling circuit disconnected.	Check correct connection or plug-in of connectors and line wires to drivers. Signalization PLC-A input 1.01.
	2. Faulty PLC input	Check signal on PLC-A input, replace PLC 06.8015.0.001.

E-30 Communication error between PLC-A and PLC-B		
Fault	**Cause**	**Troubleshooting**
For Ultraflex or Indexer version only. Loss of communication between PLC-A and PLC-B	1. Communication cable between PLCs disconnected	Check correct connection or plug-in of cable connectors into PLC communication block. Yellow control light COMM must be flashing on all communication block.
	2. Faulty cable between PLCs	Repair / replace 06.1500.0.052.
	3. Faulty communication block on PLC	Replace block 12.0010.4.067.

Released 04/2012
e-mail: service@amfreece.cz; parts@amfreece.cz; website: www.amfreece.com
Phone: +420 582 309 286; Fax: +420 582 360 606

TROUBLESHOOTING

3.2. FAULTS THAT SHOWS ONCE MACHINE IS STARTED

Fault	Cause	Troubleshooting
Machine is switched on with the power switch, but the table light and display does not light up, the ventilator in the control box does not work.	1. Power supply is not connected.	Check connection cord or voltage is socket. ATTENTION - line voltage!
	2. Power supply cord faulty	Change cable 12.0008.4.885. ATTENTION - line voltage!
	3. Power contactor QS1 faulty	Replace contactor 12.0010.4.200. ATTENTION - line voltage!
Machine is switched on with the powr switch, but the table light and display does not light up. The ventilator in the control box works. Green control light in control box at GS1 source is not on.	1. Fuse F2 - T2A	Replace fuse 12.0008.4.665. ATTENTION - line voltage!
	2. GS1 - 24V source faulty	Replace source 12.0010.4.168. ATTENTION - line voltage!
	3. Power supply 24V short circuit	Necessary to remove short circuit - find the circuit place by disconnection one part after another (PLC, display, connectors X7,X8,X9) and troubleshoot.
The ventilator in the control box does not work, but the table light and display are on.	1. Fuse F1 - T2A burnt	Replace fuse 12.0008.4.665. ATTENTION - line voltage!
	2. Faulty ventilator EV2	Replace ventilator 12.0008.4.682. ATTENTION - line voltage!
One the machine is switched on with the power switch, the table light does not light up. The display is on and shows correct information.	1. Connector X9 at control box is disconnected.	Check correct connection of X9 connector.
	2. Connecting block for XH lights disconnected	Chec correct connection at connecting block (located at sewing motor on the head). ATTENTION - kep right polarity (red=+pol 24V=brown line, black=minus pol=white line).
	3. Faulty illumination	Replace light 12.0010.4.184. ATTENTION - kep right polarity (red=+pol 24V=brown line, black=minus pol=white line) and place insulating washer under light screws.
Once the machine is switched on with the power switch, the display is not illuminated. The table light works.	1. Display power supply disconnected	Check correct display cable connection. Display must show green light LED-RUN.
	2. Faulty display	Replace display 06.8015.0.003 with correct program version for your machine.

TROUBLESHOOTING

Fault	Cause	Troubleshooting
Once the machine is switched on with the power switch, the display is not illuminated. The table light works.	1. Display power supply disconnected	Check correct display cable connection. Display must show green light LED-RUN.
	2. Faulty display	Replace display 06.8015.0.003 with correct program version for you machine.
Once the machine is switched on with the power switch, the display is illuminated, but it does not show correct information.	1. Display communication cable disconnected	Check correct connection of display communication cable (display Port A). Yellow LED:COM control light must flash on PLC communication block.
	2. Faulty display communication block	Check/ replace cable 06.1500.0.024.
	3. Faulty display	Replace display 06.8015.0.003 with correct program version according to the machine.
	4. Faulty display comunication block on PLC	Replace block 12.0010.4.067.
Contactor KM1 in control box does not make contact.	1. Stop button does not switch - marked SA1.	Check or replace Stop button SA1 - 12.0010.4.191.
	2. Interlock switch for machine opening SA2 is open.	Check or replace SA2 - 06.0120.0.000.
	3. Faulty contactor	Replace contactor KM1 - 12.0008.4.833 ATTENTION - line voltage!
	4. Connector X9 in control box	Check correct connection of X9 connector.
	5. No contactor starting impulse from PLC	Check whether PLC 101.01 output makes contact (approx. 0.5sec) after machine start-up. Impulse +24V must be present at contactor solenoid as well (yellow line wire no.1.01). Before replacing PLC due to such error, it is necessary to check correct function of this circuit at first.
Contactor KM1 makes only a short contact and immediately disconnects.	1. Faulty contactor contact	Check that contactors contacts 13 and 14 mak contact. Replace contactor 12.0008.4.833. ATTENTION - line voltage!
Po spuštìní stroje svítí na hlavní obrazovce ikonka signalizující vybitou baterii.	1. Chybné pøipojení baterie	Zkontrolujte správné pøipojení baterie.
	2. Vybitá baterie	Vymìòte baterii - viz **F 1.2.5.**

TROUBLESHOOTING

WARNING !

When working line woltage, it is necessary to disconnect the machine from power supply !

Repairs can be done only by electro-technically qualified person !

Any unskilled interference with electro-installation of the machine can cause irreversible implications and damage mechanism. Manufacturer is not responsible for such interventions and does not provide guarantee.

3.3. FAULTY ELECTROMAGNETIC VALVE SWITCH

(Display -> output test - see chapter **E 2.8**)

Fault	Cause	Troubleshooting
Testing outputs, several valves do not switch at the same time.	1. Connector X4 or X11 at the real side control box disconnected	Check correct connection of X4 and X11 connectors.
	2. Line wire no.51 disconnected (blue - pol) from X4 or X11 connector to connecting block X1	Check correct connection of line wire no.51 to connecting block X1, connector 16 and 17.
	3. Line wire no.50 disconnected (red + pol 24V) from COM interconnection of PLC outputs onto conecting block X1	Check correct connection of line wire no.50 onto connecting block X1 connector 3 and 5.
Only some valve does not make contact.	1. Mechanical fault	Check correct function of valve by pressing test button on valve (manually).
	2. Sensor signal cable to PLC disconnected or PLC extension box	See input / output table and match valve with PLC output and check circuit continuity. PLC outputs - yellow color cable. When output activated (by pressing relevant button on output test on display) control light of activated output flashing on PLC or expansion block. Check voltage +24 on terminal links COMM on PLC (red color table).
	3. Faulty output on PLC or PLC extension block	See input / otput tables and match valves with PLC outputs. When output activated (by pressing relevant button on output test on display) control light of activated output flashing on PLC or expansion block. If indicator does not light up, replace PLC 06.8015.0.001 or extension block 12.0010.4.071.
	4. Connector on valve disconnected	Check correct connection of valve and connector. ATTENTION at large valves J14 and J16 correct polarity is important (pin1=red=+pol, pin2=black=minus pol).
	5. Solenoid coil in valve cut off	When valve switches, control light is on. If light is on but valve does not switch, replace faulty valve. To test functionality, exchange valves with two cables for valves with two cables. It is not possible to exchange valves with three cables for valves with two cables!!!

TROBLESHOOTING

3.4. INDUCTION SCANNING SENSOR FAILURE

(Display -> output test - see chapter **E 2.7**)

Fault	Cause	Troubleshooting
At one sensor its light does not come up after manual move of scanning sensor.	1. Faulty adjustment of scanning sensor	Adjust scanning sensor (see manual).
	2. Faulty sensor	Replace senzor 12.0010.4.093 - short 39 mm or 12.0010.4.025 - long 50 mm.
At more sensors light does not come up after manual move of scanning sensor.	1. Connector X7 or X8 on control box disconnect	Check correct connection of X7 and X8.
	2. Connector cables of X7 or X8 on X1 connecting box disconnected	Check connection of cables no. 50 (red +pol24V) and cable no.51(blue -pol) to connection box X1.
Scanning sensor indicator light is on after manual move, but tests on display do not show indication.	1. Connector X7 or X8 on power line disconnected	Check correct connection of X7 and X8 connectors.
	2. Sensor signal cable to PLC disconnected	See input/output table and match signal with PLC output and check connection of this circuit PLC input – green color cable. When output activated, control light of activated output flashing on PLC.
	3. Faulty input on PLC	See input/output table and match signal with PLC output. When output activated, control light of activated output flashing on PLC. If light is not on, replace PLC 06.8015.0.001.
At more sensors light comes up after manual move of scanning sensor, but tests on display do not show indication.	1. Common cable on PLC inputs disconnected	Check connection of cable no.50 (red +pol 24V) onto connector COMM IN on PLC. If no troubles with voltage, replace PLC 06.8015.0.001.

3.5. FAULTY AXIS / STEPPER MOTOR MOVEMENT

(Display -> motor tests - see chapter **E 2.9**)

Fault	Cause	Troubleshooting
All axis / motors do not keep their position (it is possible to move them manually) and display signals E-21 error	1. Faulty stepper motors	See chapter Failures by error messages for description.
Axes / motor does not keep its position (it is possible to move it manually), even though no error on driver not signaled.	1. Connection of stepper motor and its driver disconnected	Check correct connection of relevant stepper motor outlets under machine head and connector on the bottom side of its driver in control box. Between phases at this drive connector, same resistance must be gauged at conector. ATTENTION – when gauging, motor must be disconnected from driver.
	2. Faulty stepper motor (discontinued winding)	Between phases of stepper motor winding same resistance must gauged.If resistance is not same, motor must be exchanged. ATTENTION – when gauging, motor must be disconnected from driver.
Axes / motor does not drive onto its sensor (it does not move) even though no error on drive is signaled.	1. Motor keeps its position (cannot be moved manually) but it does not get signal to move.	Signal to move motor (STEP)disconnected, or faulty stepper motor driver. Check impulses directly on stepper motor driver connectors.
	2. Faulty output on PLC	See input/output table and match signal with PLC output PLC. When output activated, control light of activated output flashing on PLC. If light is not on, replace PLC PLC 06.8015.0.001.
Axes / motor drives onto its sensor, but does not leave the sensor.	1. Motor turns in one direction only.	Signal to change motor direction (DIR) disconnected, or faulty stepper motor driver. Check impulses directly on stepper motor driver connectors.
	2. Faulty output on PLC	See input/output table and match signal with PLC output PLC. When output activated, control light of activated output flashing on PLC. If light does not light up (even when turning direction on display is changed), replace PLC 06.8015.0.001.
Axes / motor drives onto its sensor, but does not stop and hits a part.	1. Faulty sensor sensing at this axes – Adjust distance of sensor from screening	check sensor in output tests on display. For details see previous chapter.
	2. Faulty sensor at this axes	Replace sensor.

TROUBLESHOOTING

3.6. FAULTY FOOT PEDAL

(Display -> input test - see chapter **E 2.7**)

Fault	Cause	Troubleshooting
No machine activity after pressing foot pedal.	1. Machine not in home position.	Bring machine into home position by pressing the button  on display – follow instruction on display.
	2. Connector X5 on control box rear side disconnected	Check correct connection of X5 connector.
Machine does not lower down clamp feet after pressing down foot pedal.	1. Pedal to start machine exchanged	First press down pedal to lower feet.
	2. Faulty foot switch	check signal on PLC-A input 0.06, check or replace foot pedal 12.0010.4.174 (use input control screen on the display - switch marked SB4).
	3. Faulty air valve	Check correct functions of air valve J1 (see description of air valve function faults).
After pressing left foot pedal machine lowers down clamp feet and starts sewing immediately (does not wait for second pedal to be pressed down).	1. Machine startup set for one foot pedal only.	Set machine startup for two pedals on display in relevant menu.
Pressing down foot pedals one after another lowers down clamp feet but machine does not sew.	1. Pedals to start up machine exchanged	First press down pedal to lower clamp feet and then pedal for sewing.
	2. Faulty pedal switch	Check signal on PLC-A input 0.07, check or replace pedal 12.0010.4.174 (use input control screen on the display - switch marked SB5).

WARNING!

When working with line voltage, it is necessary to disconnet the machine from power supply !

Repairs can be done only by an electro-technically qualided person!

Any unskilled interference with electro-installation of the machine can cause irreversible implications and damage mechanism. Manufacturer is not responsible for such interventions and does not provide guarantee.