PART REPLACEMENT

Ordering Spare Parts

Include on the order form:

1) Part Number, listed in the Parts section

2) Quantity

3) Machine production number

Sample order: 17.0004.8.905 2 pcs
17.0094.0.029 4 pcs

In order to continually improve the productivity and quality of our products, the latest technical documentation revisions are included with each machine. Future revisions are acknowledged by distributing Technical Bulletins for each machine delivered, to be included in the technical Updates section of the Parts and Service manual.

Caution! Using S-100 AMF Reece designed replacement parts, ensure the best quality and highest production possible.

e-mail: service@amfreece.cz; parts@amfreece.cz; website: www.amfreece.com
Phones: +420 582 309 146 (Service), +420 582 309 286 (Spare Parts); Fax: +420 582 360 606

TABLE OF CONTENTS

Page

Head and Cam Case Support 3-1
Covers and Base Assembly 3-2
L.H. Crank and R.H. Belt Pulley 3-4
Main Stitch Shaft 3-5
Bite Adjustment and Barrel 3-6
Needle Bar Drive 3-7
Needle Bar and Gear 3-8
Stitch Shaft and Drive 3-9
Looper and Spreader Drive 3-10
Right & Left Loopers/Spreaders/Spreader Stops 3-11
Race 3-12
Stitch Feed 3-13
Bottom Shaft Assembly 3-14
Main Cam and Brake Band 3-15
Sector Shaft and Guard 3-16
Cutting Lever Assembly 3-17
Lateral Cam Shaft Assembly 3-18
Bedplate Assembly 3-19
Clamp Plate Assembly 3-20
Clamp Yoke Assembly 3-21
Clamping Lever Assembly 3-22
Starting Lever and Switch Lever Assembly 3-23
Three Fork Lever Assembly 3-24
Trip Lever Assembly 3-25
Rocking Lever 3-26
Top Thread Trimmer Assembly 3-27
Take-Up Lever and Top Thread Tension Assembly 3-28
Head 3-29
Top Thread Trimmer Assembly Actuator 3-30
Right Hand Stop Wheel 3-31
Accessories - Style 030A 3-33
Accessories - Style 030J 3-35
Accessories - Style 030T 3-37

Round Eye Style

Head, Cam Case and Bedplate Support 3-38
Main Stitch Shaft 3-39
Bite Adjustment and Barrel 3-40

Revised 10/2005
e-mail: service@amfreece.cz; parts@amfreece.cz; website: www.amfreece.com
Phones: +420 582 309 146 (Service), +420 582 309 286 (Spare Parts); Fax: +420 582 360 606

TABLE OF CONTENTS

Round Eye Style (Cont'd) **Page**

Looper and Spreader Drive 3-41
Race 3-42
Stitch Feed 3-43
Main Cam and Braqke Band 3-44
Sector Shaft and Guard 3-45
Cutting Lever Assembly 3-46
Lateral Cam Shaft Assembly 3-47
Bedplate Assembly 3-48
Clamp Plate Assembly 3-49
Three Fork Lever Assembly 3-50
Head 3-51
Accessories - Small Round Eye 3-53
Accessories - Large Round Eye 3-55
Thread Draw-Off 3-56

Cross Bar

Head, Cam Case, Main Stitch Shaft, L.H. Crank 3-57
Bite Adjustments, Stitch Shaft and Drive 3-58
Stitch Feed 3-59
Main Cam, Sector Shaft 3-60
Cutting Lever, Lateral Cam 3-61
Cam Transverse Motion 3-62
Trip Lever Assembly 3-63
Fork Lever Trimmer Actuator, Thread Retainer 3-64
Bedplate Assembly 3-65
Accessories - CRB 3-67
Race - CRB 3-68

Special Accessories 3-69
Recommended spare parts 3-70

Revised 10/2005
e-mail: service@amfreece.cz; parts@amfreece.cz; website: www.amfreece.com
Phones: +420 582 309 146 (Ser vice), +420 582 309 286 (Spare Parts); Fax: +420 582 360 606

HEAD, CAM CASE AND BEDPLATE SUPPORT

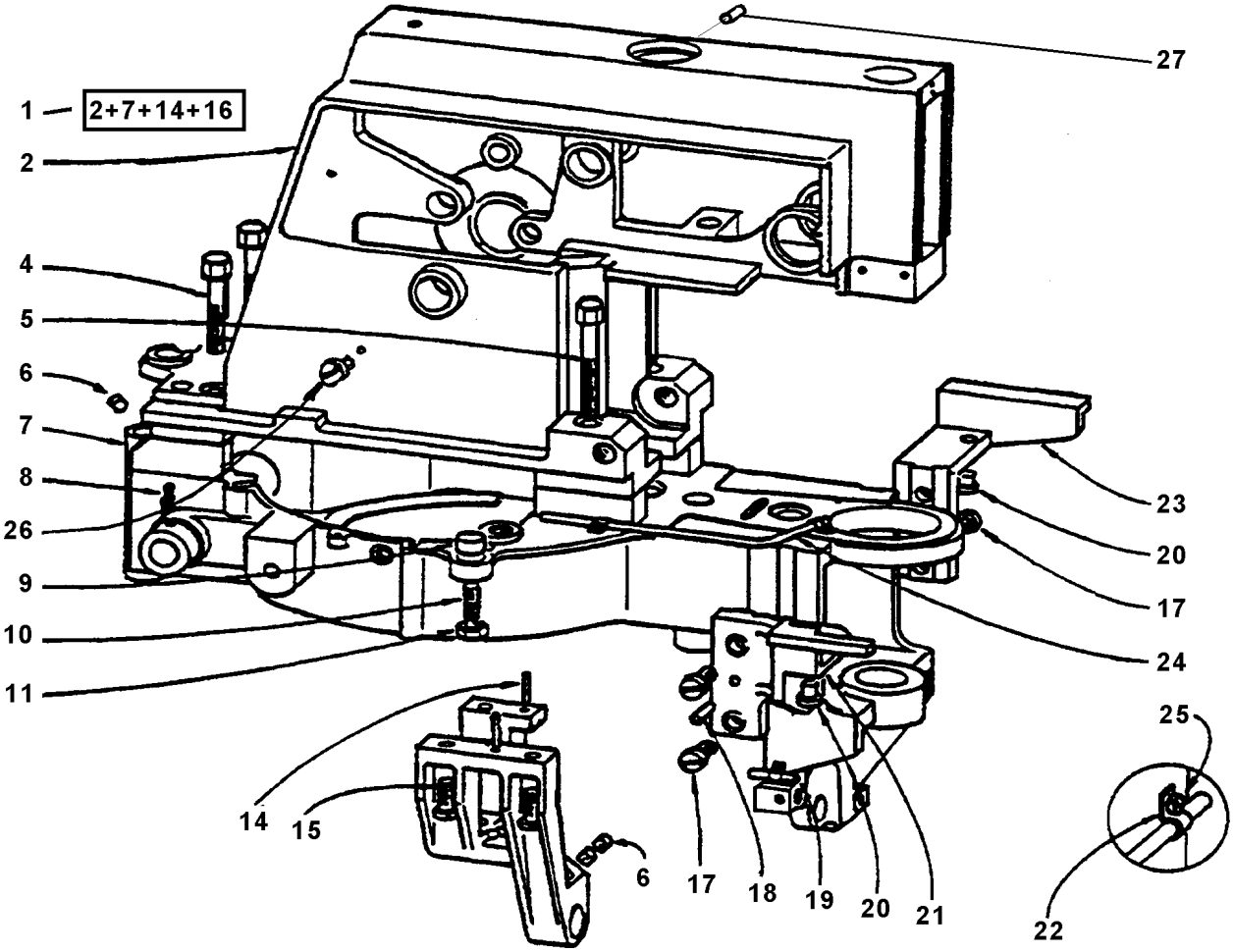

DET	PART NUMBER	DESCRIPTION	DET	PART NUMBER	DESCRIPTION
01		Head Assembly	15	08.6000.6.016	Screw
02	17.0071.3.405	Head	17	08.6000.8.016	Screw
03			18	17.0031.0.433	Pin
04	17.0014.1.243	Screw	19	17.0084.0.266	Thread Guide
05	17.0014.1.244	Screw	20	17.0094.0.029	Stop
06	17.0094.5.052	Felt	21	17.0074.4.407	Block
07	17.0071.0.205	Cam case	22	17.0082.6.000	Clamp
08	17.0044.1.443	Screw	23	17.0074.4.464	Arm
09	17.0019.2.021	Button	24	17.0027.1.416	Tubing
10	08.6010.3.006	Screw	25	08.6010.3.006	Screw
11	17.0016.1.190	Nut	26	22.0124.0.000	Screw
14	17.0031.7.039	Pin	27	17.0011.1.302	Screw M5-8

COVERS AND BASE ASSEMBLY

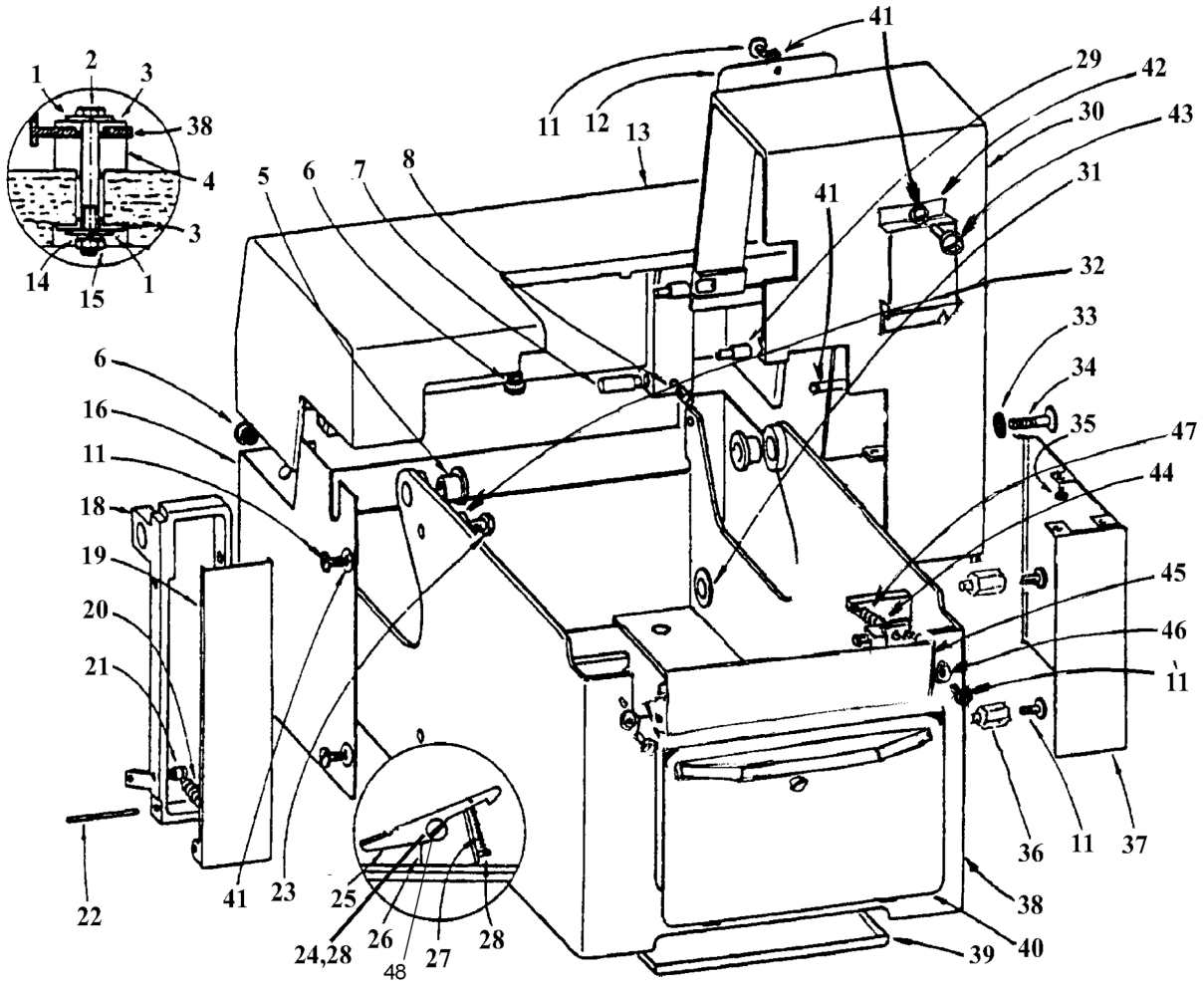

e-mail: service@amfreece.cz; parts@amfreece.cz; website: www.amfreece.com
Phones: +420 582 309 146 (Service), +420 582 309 286 (Spare Parts); Fax: +420 582 360 606

COVERS AND BASE ASSEMBLY

DET	PART NUMBER	DESCRIPTION	DET	PART NUMBER	DESCRIPTION
01	17.0019.0.441	Washer	26	17.0083.6.370	Bracket
02	08.6300.8.065	Bolt	27	17.0026.3.231	Spring
03	17.0095.1.272	Washer	28	17.0032.2.030	Pin
04	17.0095.1.273	Rubber	29	17.0094.0.154	Stud
05	17.0095.1.309	Bushing	30	17.0075.4.012	Cover
06	17.0094.0.029	Stop	31	17.0042.1.279	Thread Guide
07	17.0031.3.330	Pin	32	17.0019.0.346	Washer
08	17.0011.1.234	Screw	33	17.0094.1.097	Washer
09			34	17.0012.4.098	Screw
10			35	17.0012.0.217	Screw
11	17.0012.4.103	Screw	36	17.0014.6.057	Screw
12	17.0083.1.438	Cover	37	17.0004.1.189	Cover
13	17.0074.6.150	Cover	38	17.0004.8.902	Housing
14	17.0019.1.109	Lockwasher	39	17.0083.3.186	Oil Reservoir
15	17.0016.1.135	Nut	40	17.0004.8.904	Front Cover
16	17.0083.1.650	Cover	41	08.6850.4.000	Washer
18	17.0004.8.900	Bracket	42	17.0083.1.630	Cover
19	17.0083.1.429	Cover	43	08.6200.4.006	Screw
20	17.0026.3.189	Spring	44	17.0064.8.112	Holder
21	17.0013.1.341	Stud	45	17.0083.1.651	Cover
22	17.0031.0.034	Pin	46	08.6850.4.000	Washer
23	17.0014.1.112	Screw	47	17.0026.3.014	Spring
24	08.6310.6.016	Screw	48	17.0044.1.211	Washer
25	17.0081.0.421	Lever			

L.H. CRANK AND R.H. BELT PULLEY

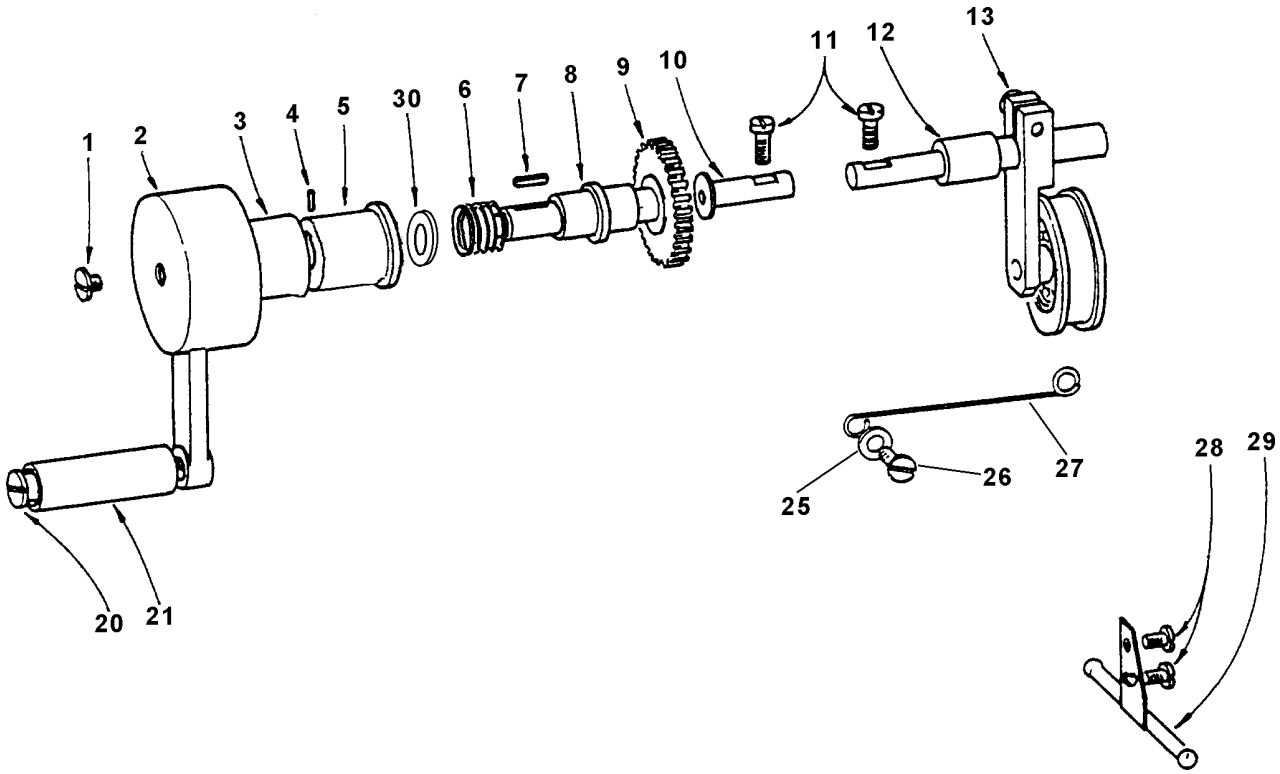

DET	PART NUMBER	DESCRIPTION	DET	PART NUMBER	DESCRIPTION
1	17.0012.4.042	Screw	12	17.0033.2.133	Bushing
2	17.0063.5.184	Crank	13	17.0004.3.485	Plate
3	17.0002.4.140	Feed Clutch	20	17.0013.1.343	Screw
4	17.0031.0.480	Pin	21	17.0041.2.149	Roll
5	17.0042.5.256	Collar	25	08.6850.4.000	Washer
6	17.0026.0.481	Spring	26	17.0012.0.227	Screw
7	17.0021.1.068	Key	27	17.0027.1.463	Thread Guide
8	17.0042.4.120	Bushing	28	17.0012.0.217	Screw
9	17.0055.1.153	Gear	29	17.0002.5.241	Tubing
10	17.0032.0.193	Shaft	30	17.0019.0.602	Washer
11	08.6010.5.012	Screw			

e-mail: service@amfreece.cz; parts@amfreece.cz; website: www.amfreece.com
Phones: +420 582 309 146 (Service), +420 582 309 286 (Spare Parts); Fax: +420 582 360 606

MAIN STITCH SHAFT

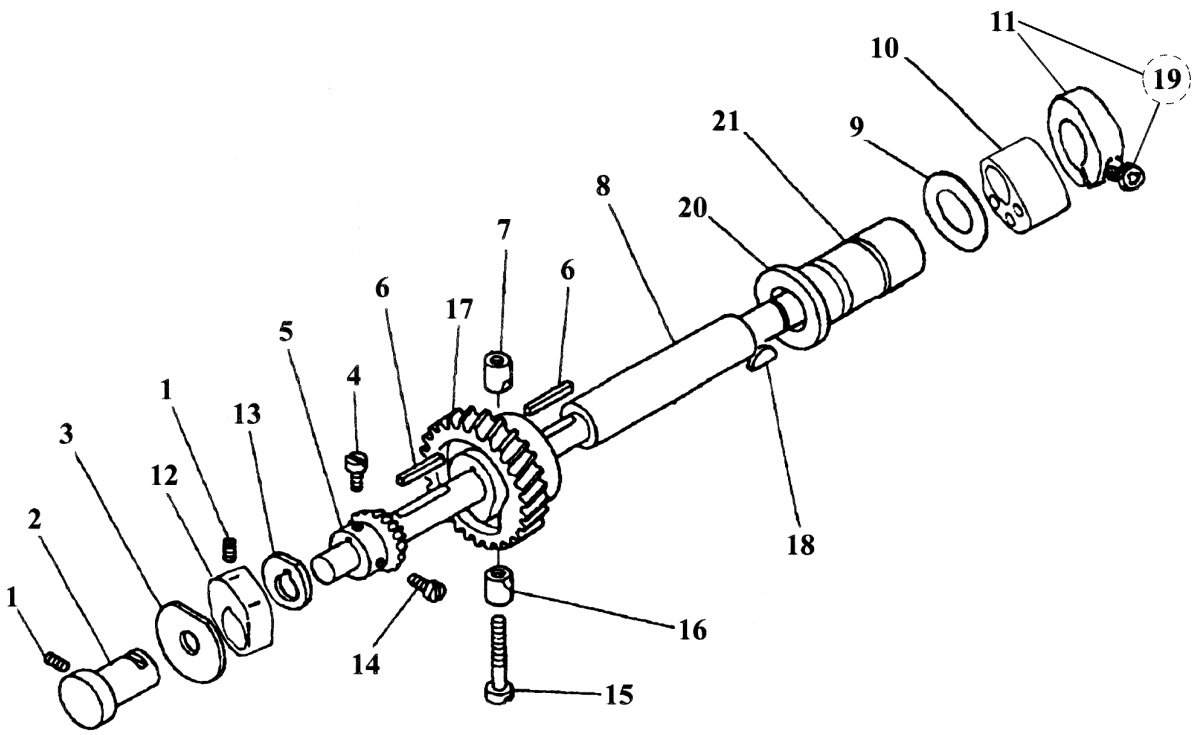

DET	PART NUMBER	DESCRIPTION	DET	PART NUMBER	DESCRIPTION
01	17.0011.1.261	Screw	12	17.0067.2.098	Counterweight
02	17.0041.5.030	Shaft Bushing	13	17.0081.8.377	Washer
03	17.0081.4.376	Washer	14	17.0013.2.120	Screw
04	17.0013.2.119	Screw	15	17.0012.0.114	Screw
05	18.0056.2.117	Gear	16	17.0041.0.232	Bushing
06	17.0021.1.070	Key	17	17.0055.2.172	Gear
07	17.0043.1.011	Roll	18	17.0021.1.045	Key
08	17.0034.9.201	Shaft	19	08.6000.5.016	Screw
09	17.0019.0.605	Washer	20	17.0042.5.280	Bushing
10	17.0067.2.411	Vibrator Cam	21	12.2050.1.001	Needle Bearing
11	17.0043.6.280	Clamp Collar			

BITE ADJUSTMENT AND BARREL

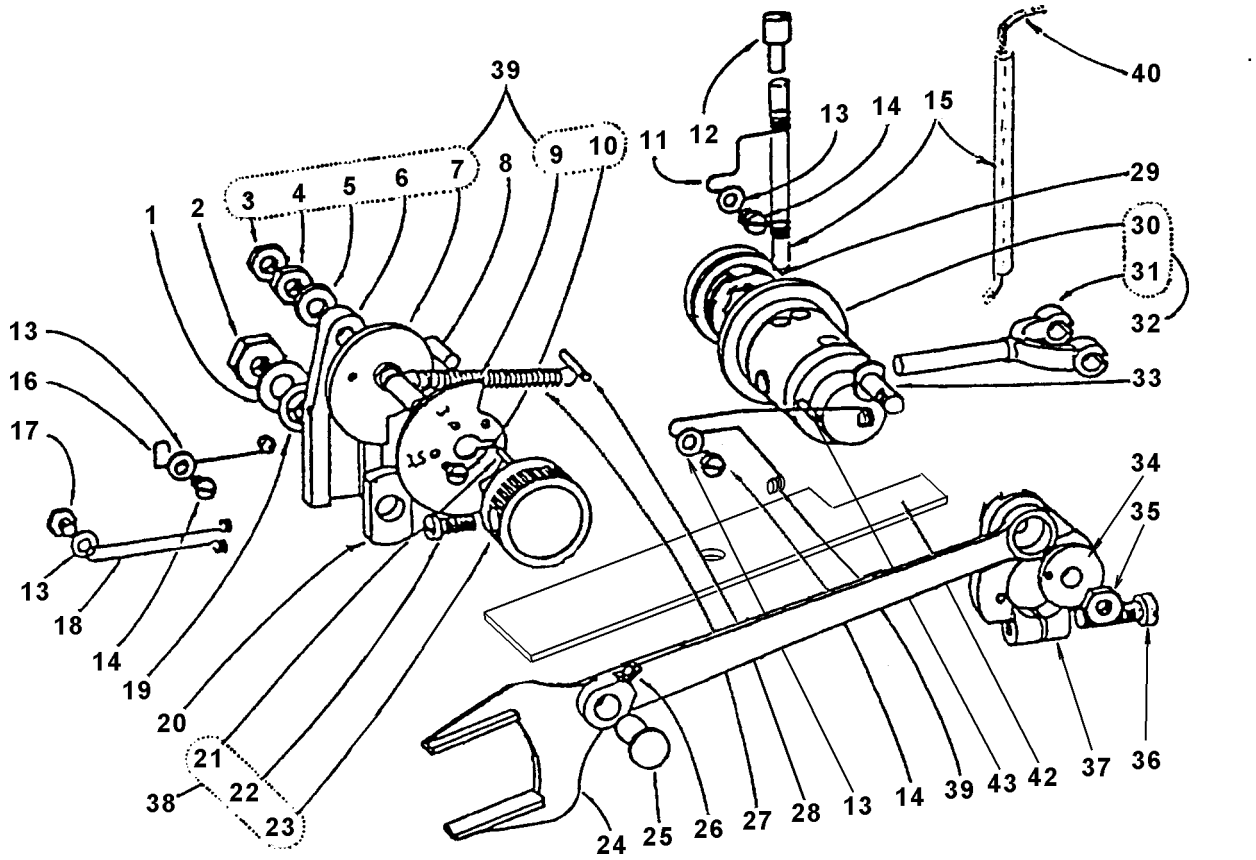

DET	PART NUMBER	DESCRIPTION	DET	PART NUMBER	DESCRIPTION
1	17.0019.0.364	Washer	23	17.0044.2.534	Knob
2	17.0016.1.190	Nut	24	17.0063.4.169	Fork Lever
3	17.0016.1.140	Nut	25	17.0032.0.194	Stud
4	08.6700.6.000	Nut	26	17.0011.1.230	Screw
5	17.0019.2.061	Washer	27	17.0026.3.123	Spring
6	17.0064.1.090	Bracket	28	17.0031.0.199	Pin
7	17.0004.9.858	Eccentric	29	17.0095.1.329	Wheel
8	18.0031.3.401	Pin	30	17.0003.5.483	Barrel
9	17.0081.4.313	Limiter	31	17.0063.4.172	Yoke Fork
10	17.0012.0.215	Screw	32	17.0003.5.431	Yoke Asm.
11	17.0027.1.799	Spring	33	17.0012.0.576	Stud
12	17.0042.1.282	Bushing	34	17.0067.1.025	Eccentric
13	08.6850.4.000	Washer	35	08.6700.6.300	Nut
14	17.0012.0.217	Screw	36	17.0012.1.169	Screw
15	17.0094.2.092	Tubing	37	17.0063.6.070	Clamp
16	17.0027.1.411	Wick Guide	38	17.0004.4.819	Knob Asm.
17	08.6310.4.006	Screw	39	17.0002.6.188	Bracket Asm.
18	17.0027.1.412	Wick Guide	40	17.0094.5.318	Wick 3mm Dia. (not shown)
19	17.0019.0.517	Washer	41	17.0027.1.413	Wick Guide
20	17.0045.1.099	Block	42	17.0097.5.366	Felt
21	17.0031.0.428	Pin	43	17.0031.0.425	Pin
22	08.6000.4.010	Screw	44		

e-mail: service@amfreece.cz; parts@amfreece.cz; website: www.amfreece.com
Phones: +420 582 309 146 (Service), +420 582 309 286 (Spare Parts); Fax: +420 582 360 606

NEEDLE BAR DRIVE

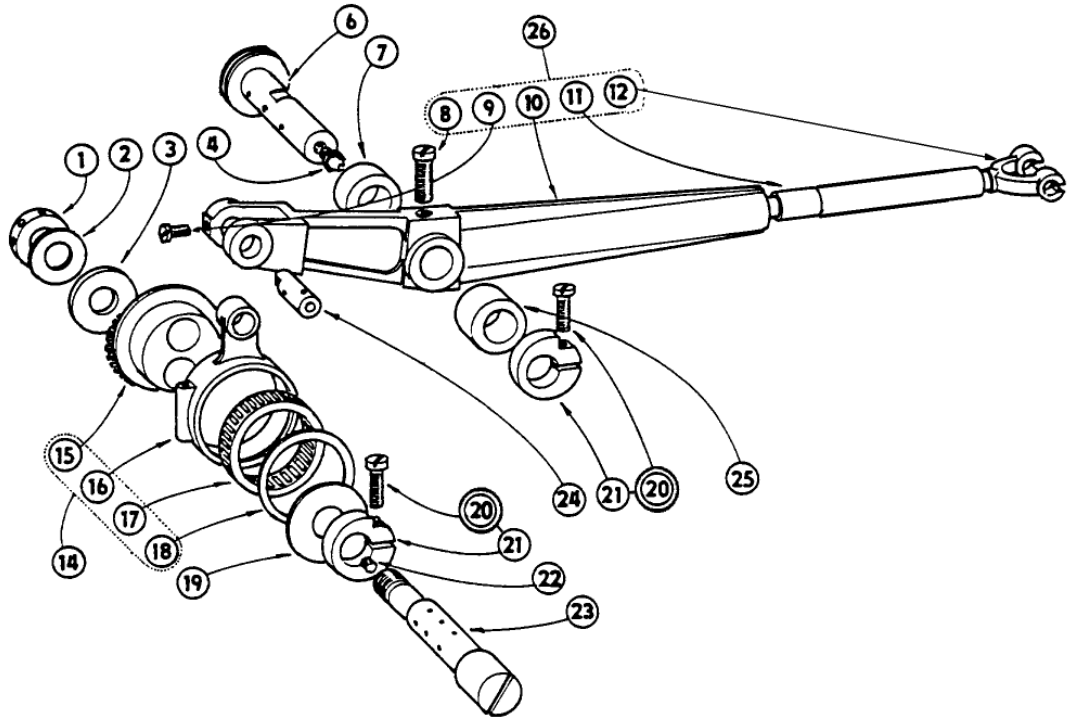

DET	PART NUMBER	DESCRIPTION	DET	PART NUMBER	DESCRIPTION
01	17.0017.4.058	Nut	15	17.0003.5.475	Eccentric
02	17.0019.0.371	Washer	16	17.0063.0.253	Rick Link
03	17.0019.0.225	Washer	17	12.2050.0.000	Bearing
04	17.0004.7.242	Screw	18	17.0019.2.077	Washer
06	17.0033.0.102	Pin	19	17.0081.4.375	Washer
07	17.0041.0.551	Roll	20	17.0012.0.543	Screw
08	17.0012.2.031	Screw	21	17.0043.6.351	Clamp
09	17.0012.0.290	Screw	22	17.0011.1.230	Screw
10	17.0063.6.257	Needle Bar Lever	23	17.0033.5.127	Shaft Eccentric
11	17.0041.2.160	Bushing	24	17.0031.4.205	Shaft
12	17.0063.4.166	Yoke	25	17.0041.0.548	Roll
14	17.0003.5.479	Needle Drive Bearing Asm.	26	17.0004.4.797	Needle Bar Lever Asm.

NEEDLE BAR AND GEAR

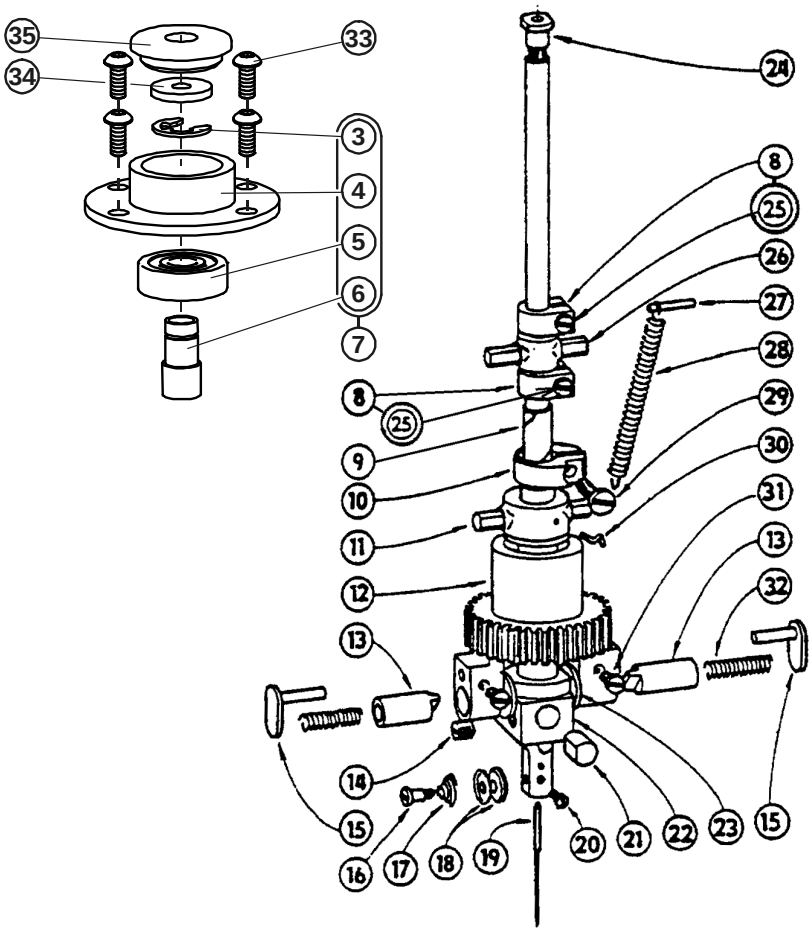

DET	PART NUMBER	DESCRIPTION	DET	PART NUMBER	DESCRIPTION
01			19	02.0501.0.011	Needle
02				02.0503.3.113	Needle
03	17.0027.4.085	Ring	20	17.0012.0.570	Needle Screw
04	19.0044.5.407	Guide	21	17.0031.5.041	Button
05	12.2010.1.001	Bushing	22	17.0041.6.129	Needle Bar Guide
06	17.0042.1.283	Guiding	23	17.0019.1.062	Retainer Washer
07	19.0002.4.409	Needle Bar Bearning Asm.	24	17.0042.2.216	Thread Draw-off
08	17.0043.6.277	Clamp	25	17.0012.0.120	Screw
09	17.0002.1.274	Needle Bar	26	17.0045.3.004	Gimbal
10	17.0043.6.351	Clamp	27	17.0031.0.196	Pin
11	17.0045.3.006	Gimbal	28	17.0026.3.014	Spring
12	17.0055.5.042	Gear	29	17.0012.0.543	Screw
13	17.0031.3.027	Guide	30	17.0027.1.073	Pin
14	08.6400.5.305	Screw	31	08.6400.3.005	Screw
15	10.1021.2.000	Retainer	32	17.0026.1.084	Spring
16	17.0015.2.053	Screw	33	08.6010.4.008	Screw
17	17.0026.2.077	Tension Spring	34	10.1004.0.000	Felt
18	17.0082.8.017	Tension Disc	35	11.1011.0.000	Cover

e-mail: service@amfreece.cz; parts@amfreece.cz; website: www.amfreece.com
Phones: +420 582 309 146 (Service), +420 582 309 286 (Spare Parts); Fax: +420 582 360 606

STITCH SHAFT AND DRIVE

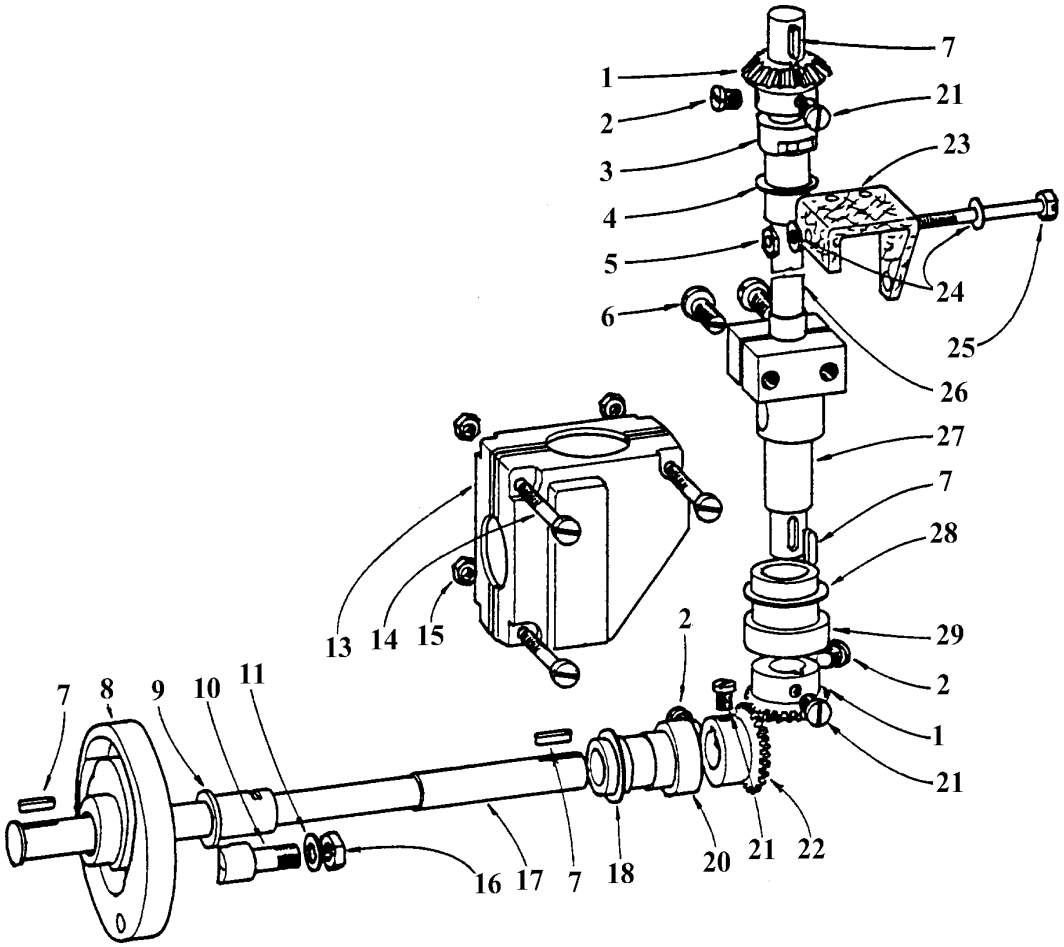

DET	PART NUMBER	DESCRIPTION	DET	PART NUMBER	DESCRIPTION
01	18.0056.2.118	Bevel Gear	16	17.0016.1.179	Nut
02	17.0013.2.120	Screw	17	17.0032.2.282	Shaft
03	17.0042.5.287	Bearing	18	17.0019.0.222	Washer
04	17.0019.0.226	Washer	20	17.0042.5.247	Bushing
05	08.6710.4.000	Nut	21	17.0013.2.119	Screw
06	17.0012.0.113	Screw	22	18.0056.2.117	Gear
07	17.0021.1.069	Key	23	17.0094.5.308	Bracket
08	17.0067.5.152	Stitch Cam	24	08.6850.4.000	Washer
09	17.0042.5.288	Bushing	25	08.6000.4.045	Screw
10	17.0033.3.138	Stud	26	17.0034.6.039	Shaft
11	08.6850.5.000	Washer	27	17.0032.2.272	Shaft Clamp
13	17.0004.6.939	Housing	28	17.0019.0.221	Washer
14	17.0012.0.301	Screw	29	17.0042.5.249	Bushing
15	17.0016.1.137	Nut			

LOOPER AND SPREADER DRIVE

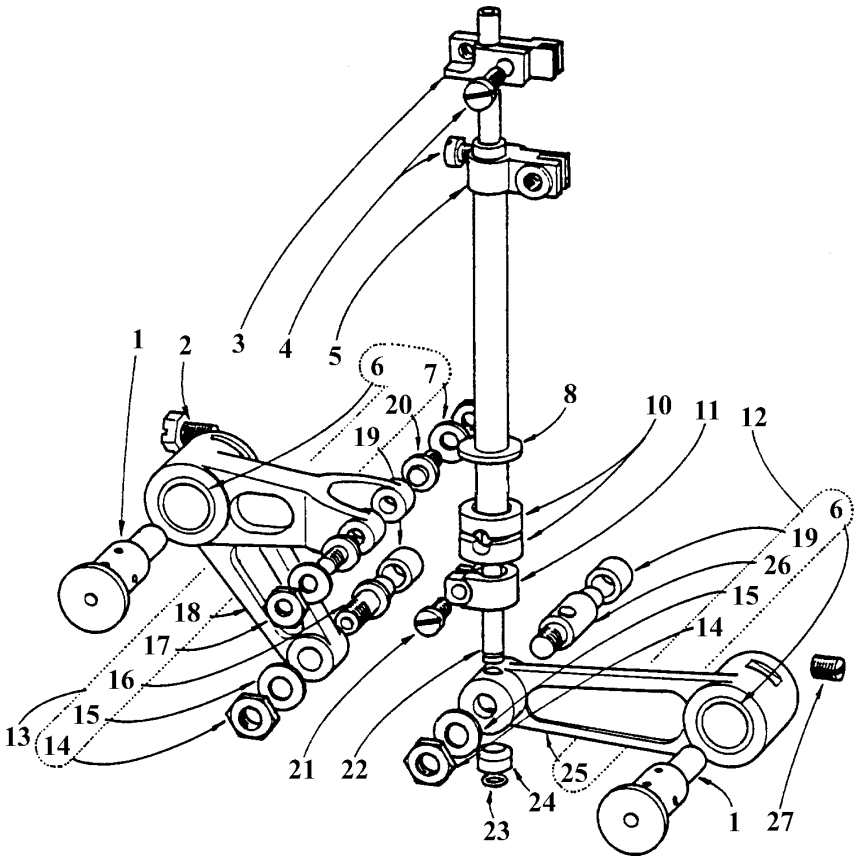

DET	PART NUMBER	DESCRIPTION	DET	PART NUMBER	DESCRIPTION
01	17.0032.2.268	Stud	15	17.0019.0.346	Washer
02	17.0014.1.015	Screw	16	17.0033.3.129	Stud
03	17.0064.6.117	Clamp	17	17.0016.1.143	Nut
04	08.6010.4.012	Screw	18	17.0063.6.256	Looper Lever
05	17.0074.4.405	Clamp	19	17.0041.8.096	Roll
06	17.0041.0.550	Bushing	20	17.0033.3.131	Stud
07	08.6850.5.000	Washer	21	08.6010.4.010	Screw
08	17.0004.9.850	Shaft Asm.	22	17.0084.1.226	Shaft
10	17.0019.0.398	Bushing	23	17.0027.4.045	Clip Ring
11	17.0043.6.352	Clamp	24	17.0042.6.053	Roll
12	17.0004.4.795	Lever Assembly	25	17.0061.2.336	Lever
13	17.0004.4.793	Lever Assembly	26	17.0033.2.126	Stud
14	17.0016.1.140	Nut	27	17.0011.2.013	Screw

e-mail: service@amfreece.cz; parts@amfreece.cz; website: www.amfreece.com
Phones: +420 582 309 146 (Service), +420 582 309 286 (Spare Parts); Fax: +420 582 360 606

RIGHT & LEFT LOOPERS / SPREADERS / SPREADER STOPS

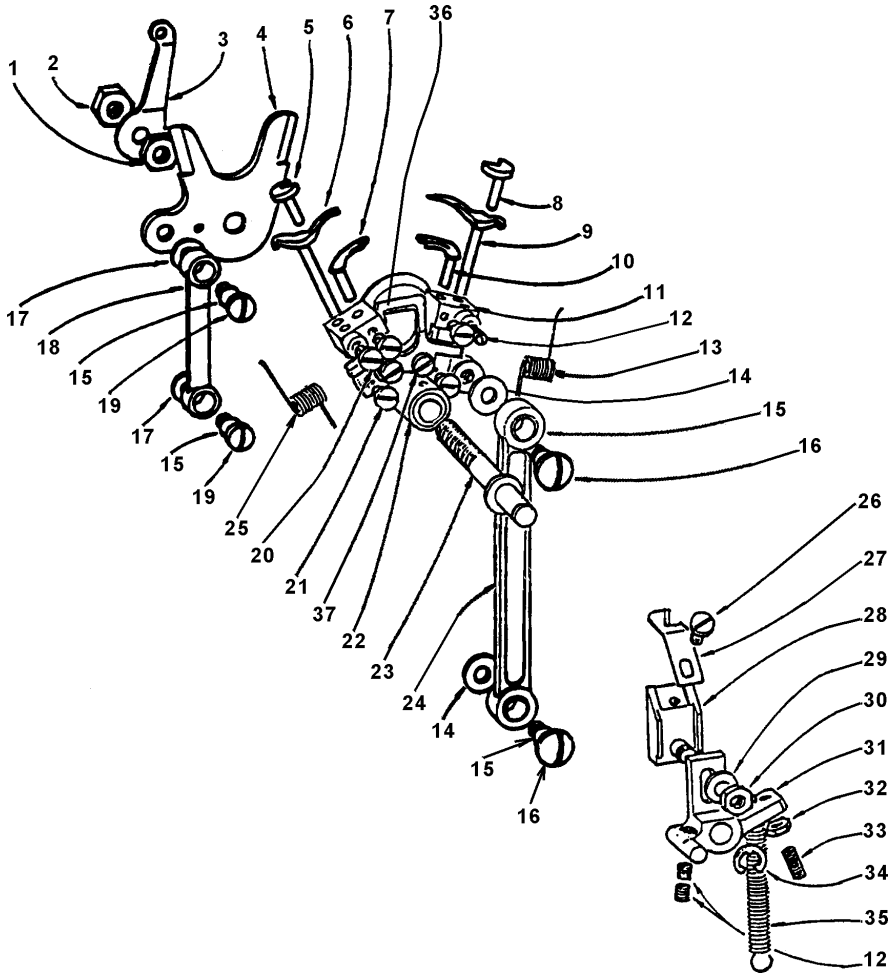

DET	PART NUMBER	DESCRIPTION	DET	PART NUMBER	DESCRIPTION
1	17.0016.1.149	Nut	20	08.6010.3.006	Screw
2	17.0016.1.179	Nut	21	17.0012.1.139	Screw
3	17.0082.1.027	Thread Guide	22	17.0003.5.711	Looper Carrier
4	18.0081.8.706	Spreader Wedge	23	17.0033.3.158	Stud
5	17.0033.8.089	L.H. Spreader Stop	24	17.0004.4.829	Looper Link
6	17.0004.9.895	Forked Spreader	25	17.0026.4.293	L.H. Spring
7	17.0069.4.049	Eye Looper	26	17.0012.0.605	Screw
8	17.0033.8.088	R.H. Spreader Stop	27	17.0087.0.204	Knife
9	17.0004.9.894	R.H. Spreader	28	17.0003.5.721	Knife Holder
10	17.0069.4.048	Blind Looper	29	08.6850.4.000	Washer
11	17.0003.5.711	Looper Carrier	30	08.6710.4.000	Nut
12	17.0011.1.248	Screw	31	17.0064.6.336	Lever
13	17.0026.4.292	R.H. Spring	32	08.6710.3.000	Nut
14	17.0019.1.088	Washer	33	17.0011.1.249	Screw
15	17.0041.1.094	Roll	34	17.0027.4.090	Lockwasher
16	17.0012.1.142	Screw	35	17.0026.3.173	Spring
17	17.0019.0.228	Washer	36	17.0082.5.898	Needle Guard
18	17.0063.1.073	Spreader Link	37	17.0012.0.404	Screw
19	17.0012.1.140	Stud			

RACE

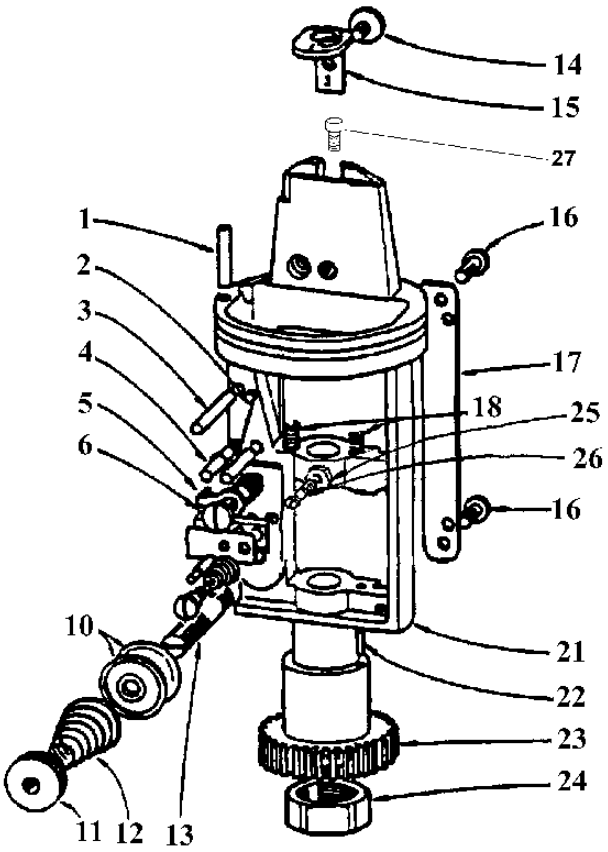

DET	PART NUMBER	DESCRIPTION	DET	PART NUMBER	DESCRIPTION
01	17.0084.1.001	Thread Guide	15	17.0064.7.263	Throat Plate*AF
02	17.0026.4.035	Spring	16	17.0012.0.290	Screw
03	17.0031.0.428	Pin	17	17.0081.5.003	Bracket
04	17.0031.0.426	Pin	18	17.0026.0.215	Spring
05	17.0064.7.162	Plate	21	17.0073.1.018	Race
06	08.6010.4.012	Screw	22	17.0031.0.406	Pin
10	17.0082.8.084	Tension Plate	23	17.0055.1.158	Gear
11	17.0017.1.016	Nut	24	17.0016.1.093	Nut
12	17.0026.2.078	Tension Spring	25	08.6710.4.000	Nut
13	17.0011.8.041	Stud	26	17.0031.6.063	Screw
14	17.0012.1.137	Screw	27	17.0012.2.400	Screw

e-mail: service@amfreece.cz; parts@amfreece.cz; website: www.amfreece.com
Phones: +420 582 309 146 (Service), +420 582 309 286 (Spare Parts); Fax: +420 582 360 606

STITCH FEED

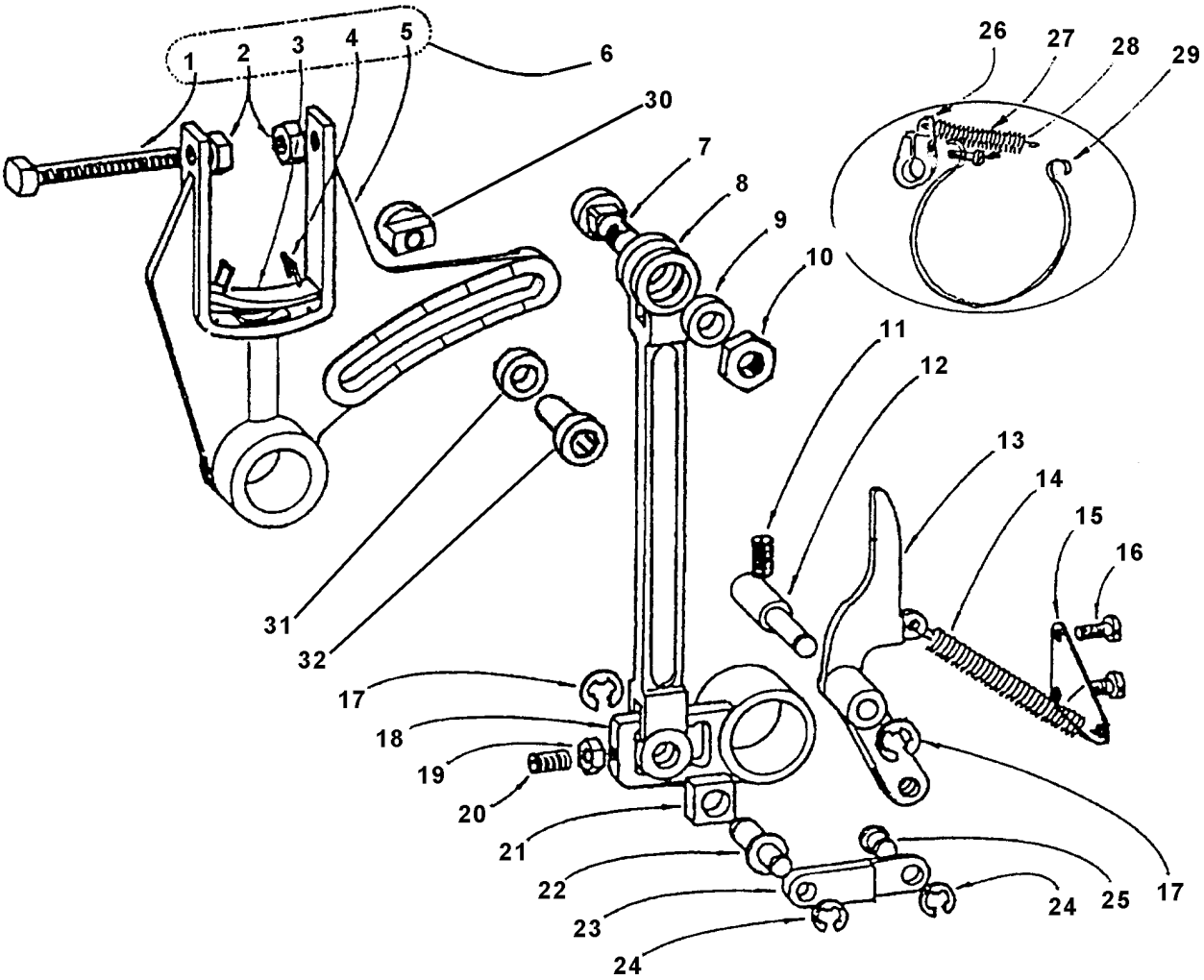

DET	PART NUMBER	DESCRIPTION	DET	PART NUMBER	DESCRIPTION
1	17.0014.4.036	Screw	17	17.0027.4.084	Lockwasher
2	08.6700.6.300	Nut	18	17.0064.1.089	Lever Guide
3	17.0094.5.307	Wicking	19	17.0016.1.146	Nut
4	17.0027.1.410	Clamp	20	17.0011.1.242	Screw
5	17.0063.6.260	Stitch Feed	21	17.0064.6.122	Block
6	17.0004.4.806	Stitch Feed Assembly	22	17.0032.3.162	Stud
7	17.0032.5.031	Stud	23	17.0061.2.343	Bracket
8	17.0063.2.154	Link	24	17.0027.4.083	Lockwasher
9	17.0041.0.554	Roll	25	17.0032.0.261	Stud
10	17.0016.1.190	Nut	26	17.0043.6.437	Clamp
11	17.0011.1.240	Screw	27	17.0026.3.245	Spring
12	17.0034.9.155	Shaft	28	17.0012.0.516	Screw
13	17.0063.3.195	Lever	29	17.0027.1.503	Brake
14	17.0026.3.013	Spring	30	17.0016.3.051	Nut
15	17.0082.5.869	Plate	31	17.0019.0.346	Washer
16	08.6010.4.008	Screw	32	17.0012.0.457	Screw

BOTTOM SHAFT ASSEMBLY

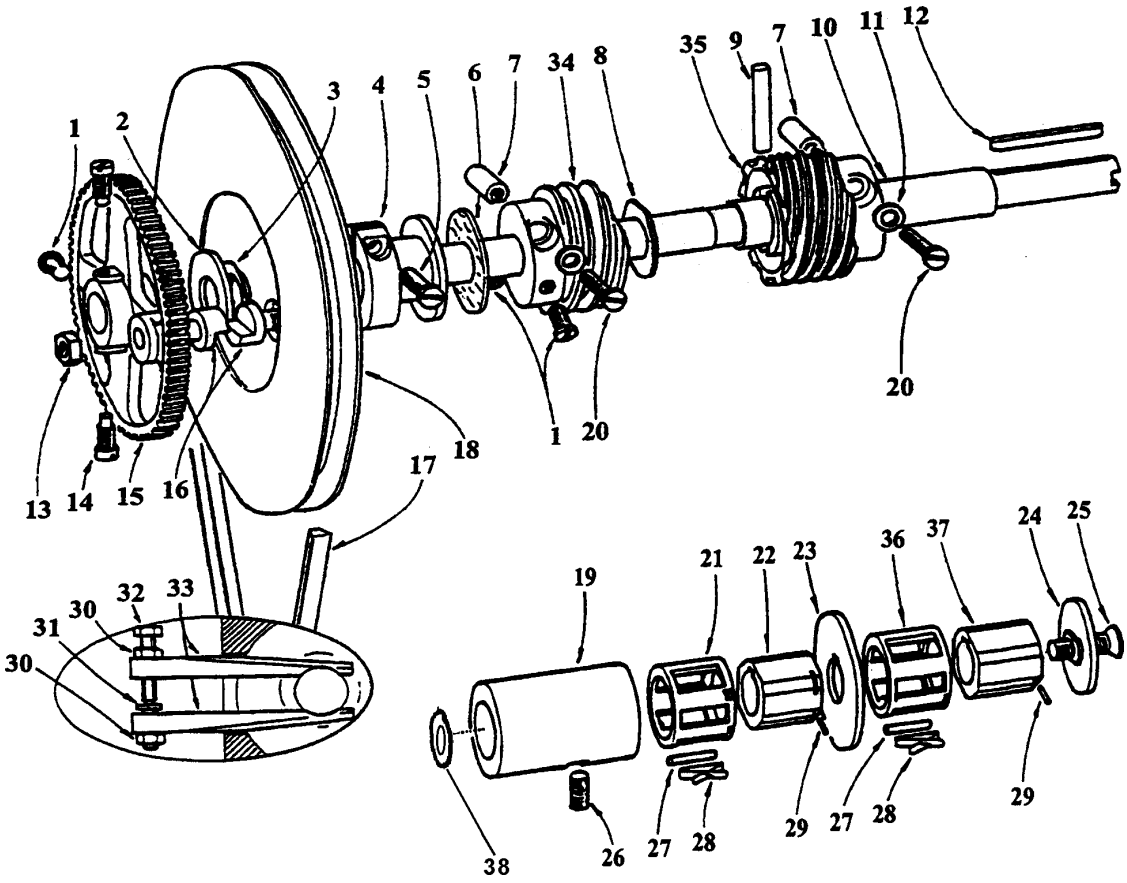

DET	PART NUMBER	DESCRIPTION	DET	PART NUMBER	DESCRIPTION
01	17.0013.2.192	Screw	20	08.6000.4.025	Screw
02	17.0094.1.143	Bushing	21	17.0044.1.325	Bearing
03	17.0019.0.610	Washer	22	17.0045.9.059	Bearing Housing
04	17.0044.5.114	Spool	23	17.0019.5.049	Washer
05	17.0012.0.232	Screw	24	17.0019.6.033	Lockwasher
06	17.0094.3.142	Washer	25	17.0012.6.149	Screw
07	17.0021.0.018	Nut	26	17.0011.1.240	Screw
08	17.0019.1.063	Washer	27	12.2099.1.007	Needle Bearing
09	17.0031.0.434	Pin	28	17.0028.3.102	Clip
10	17.0034.9.156	Drive Shaft	29	17.0031.0.328	Pin
11	17.0019.0.469	Washer	30	17.0016.1.179	Nut
12	17.0021.1.071	Key	31	17.0012.7.007	Screw
13	17.0016.1.190	Nut	32	17.0014.2.011	Screw
14	17.0013.2.090	Screw	33	17.0074.4.451	Clamp
15	17.0055.1.152	Wheel	34	17.0057.0.056	Friction Collar
16	17.0033.5.113	Dog	35	17.0057.0.057	Gear
17	12.5050.1.500	Cutting Wheel Belt	36	17.0044.1.618	Bearing
18	17.0052.0.315	Pulley	37	17.0045.9.048	Bearing Housing
19	17.0042.6.054	Bushing	38	17.0094.3.141	Washer

MAIN CAM AND BRAKE BAND

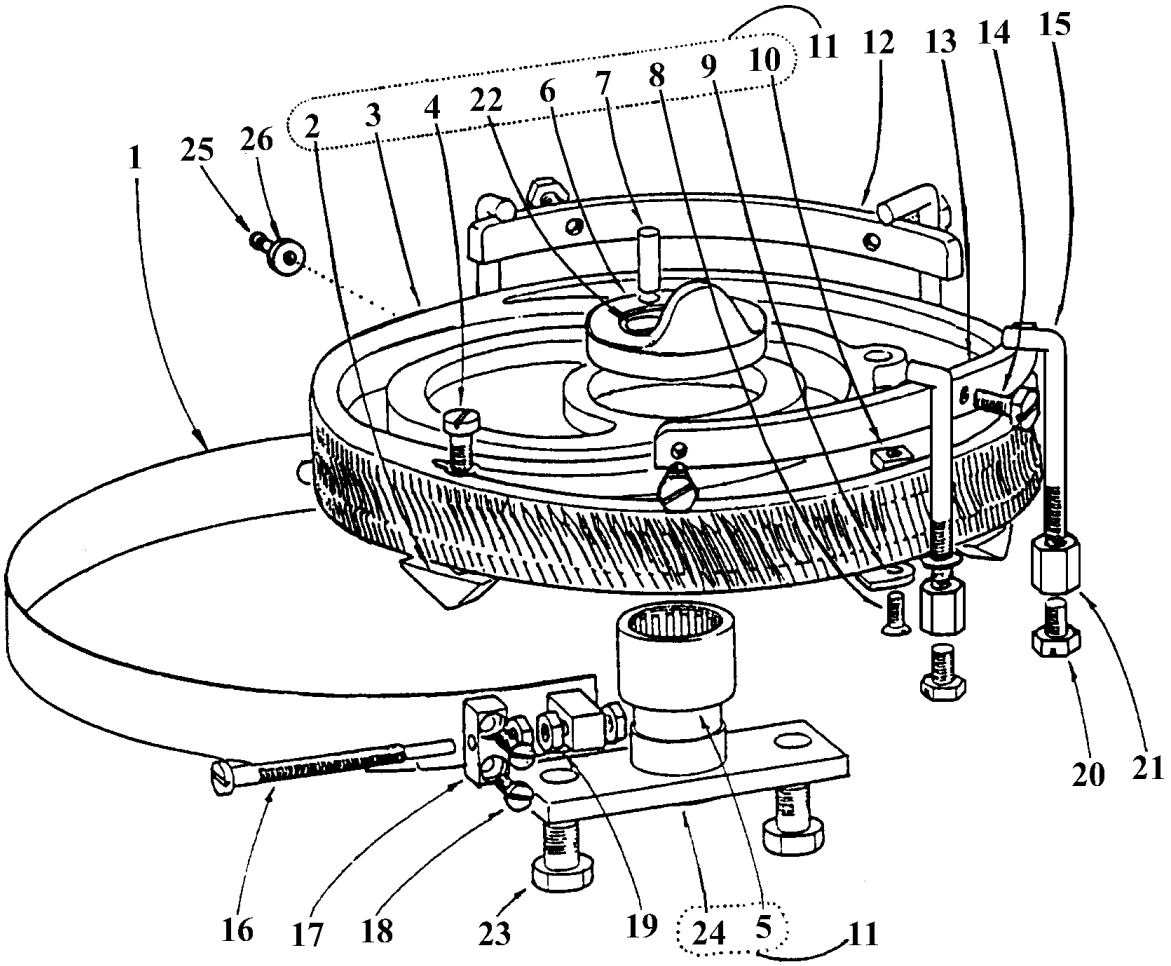

DET	PART NUMBER	DESCRIPTION	DET	PART NUMBER	DESCRIPTION
01	17.0002.7.589	Brake Band	14	08.6000.5.012	Screw
02	17.0062.5.019	Clamping Wedge	15	17.0038.2.012	Hook
03	17.0067.4.127	Main Cam	16	17.0012.0.549	Screw
04	08.6000.5.010	Screw	17	17.0064.5.947	Block
05	12.2050.1.002	Roller Bearing	18	08.6000.4.012	Screw
06	17.0067.2.164	Cutting Cam	19	17.0016.1.179	Nut
07	12.1010.0.516	Pin	20	17.0014.1.015	Screw
08	08.6100.4.010	Screw	21	17.0016.1.045	Nut
09	17.0082.5.563	Clamp	22	17.0027.4.128	Wire Snap Ring
10	17.0016.2.003	Nut	23	08.6300.8.016	Screw
11	17.0002.7.575	Cam Assembly	24	11.3027.0.003	Base Assembly
12	17.0081.3.957	Hold Down	25	17.0012.6.110	Screw
13	17.0081.3.960	Hold Down	26	17.0044.1.582	Washer

SECTOR SHAFT AND GUARD

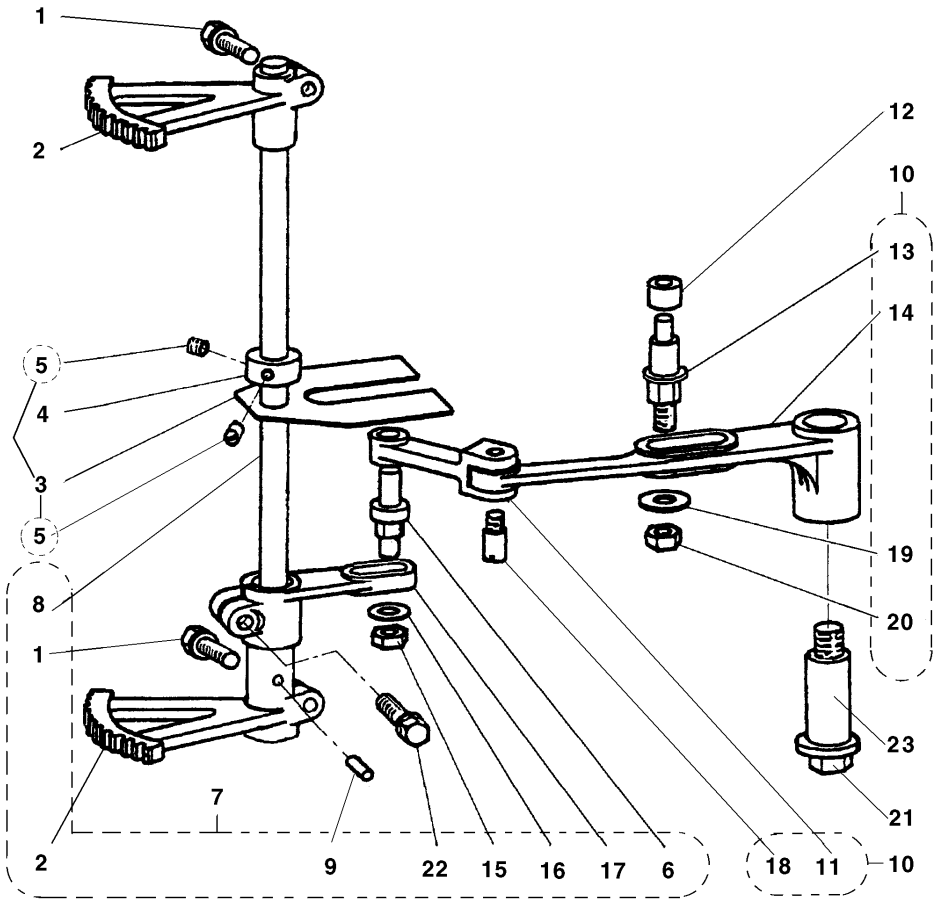

DET	PART NUMBER	DESCRIPTION	DET	PART NUMBER	DESCRIPTION
01	17.0011.7.009	Screw	13	17.0032.3.196	Stud
02	17.0055.3.025	Upper Sector	14	17.0063.6.265	Lower Lateral Lever
03	17.0083.1.096	Plate	15	17.0016.1.182	Nut
04	17.0043.6.018	Roll	16	17.0019.0.364	Washer
05	08.6400.5.305	Screw	17	17.0063.6.308	Lower Lever
06	17.0033.3.132	Stud	18	17.0033.1.153	Screw
07	17.0006.0.152	Bracket Rotary Gear Asm.	19	17.0019.0.371	Washer
08	17.0034.2.328	Shaft	20	17.0016.1.290	Nut
09	17.0031.2.025	Pin	21	08.6000.8.050	Screw
10	17.0004.4.559	Lever Change Asm.	22	17.0014.1.180	Screw
11	17.0063.6.044	Fork	23	11.3016.0.000	Bushing
12	17.0041.8.181	Roll			

CUTTING LEVER ASSEMBLY

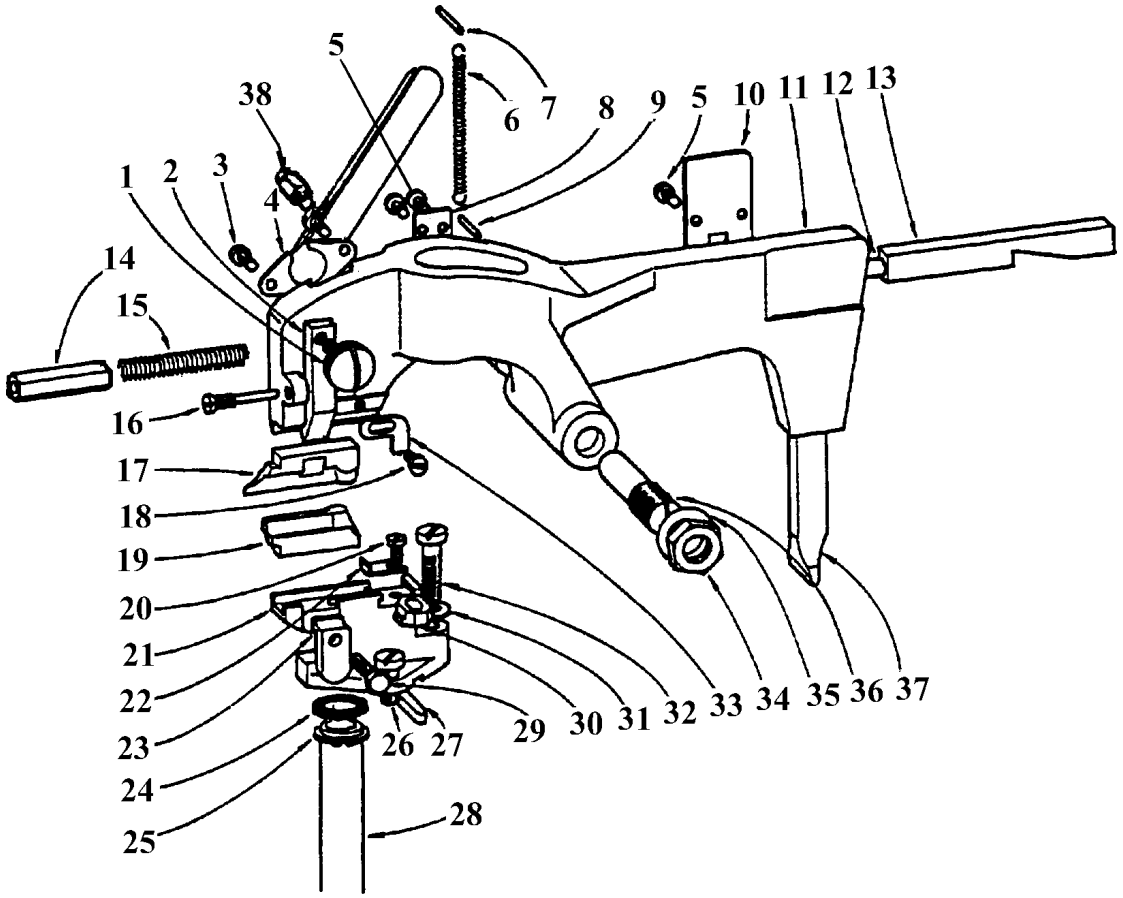

DET	PART NUMBER	DESCRIPTION	DET	PART NUMBER	DESCRIPTION
01	17.0013.4.027	Screw	20	17.0012.0.246	Screw
02	17.0063.6.220	Knife Holder	21	17.0074.4.504	Knife Holder
03	17.0012.0.331	Screw	22	17.0082.4.545	Stop
04	17.0002.7.584	Lever	23	17.0064.6.416	Knife Clamp
05	17.0012.0.328	Screw	24	17.0094.3.085	Ring
06	17.0026.3.013	Spring	25	17.0027.4.127	Lockwasher
07	17.0031.0.427	Pin	26	08.6010.5.012	Screw
08	17.0028.1.125	Plate	27	17.0021.1.073	Key
09	17.0031.0.405	Pin	28	17.0084.1.228	Shaft
10	17.0082.5.108	Cover Plate	29	17.0014.1.066	Screw
11	17.0063.5.234	Cutting Lever	30	17.0064.5.170	Spreader Block
12	17.0011.5.019	Shaft	31	17.0019.0.346	Washer
13	17.0064.6.298	Pressure Bar	32	17.0012.0.425	Screw
14	17.0016.1.260	Nut	33	17.0082.5.997	Clamp
15	17.0026.1.082	Spring	34	17.0016.1.288	Nut
16	17.0013.1.415	Screw	35	17.0019.0.560	Washer
17	18.0087.0.405	Eye Knife 3/5 CA	36	17.0011.3.113	Stud
18	17.0012.0.571	Screw	37	17.0062.5.149	Cam Follower
19	See Page 3-33	Cutting Steel	38	17.0033.2.143	Stud

LATERAL CAM SHAFT ASSEMBLY

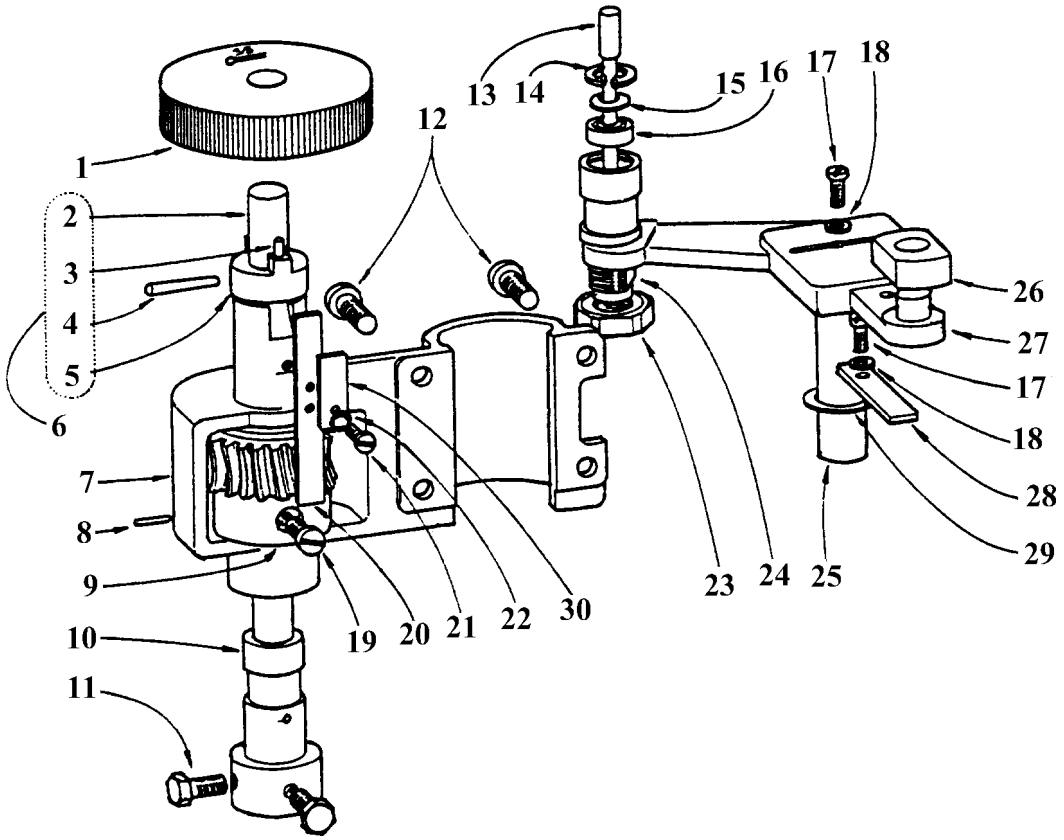

DET	PART NUMBER	DESCRIPTION	DET	PART NUMBER	DESCRIPTION
01	17.0067.4.155	Lateral Cam	16	12.2010.0.002	Bearing
02	17.0034.2.219	Shaft	17	08.6010.4.010	Screw
03	17.0031.0.425	Pin	18	08.6850.4.000	Washer
04	17.0031.2.024	Pin	19	17.0013.2.090	Screw
05	17.0064.7.226	Shaft Washer	20	17.0094.5.310	Felt
06	17.0004.3.259	Lateral Cam Shaft Asm.	21	17.0013.6.032	Screw
07	17.0074.4.421	Housing	22	17.0019.2.061	Curved Spring Washer
08	17.0031.0.429	Pin	23	17.0016.1.093	Nut
09	17.0057.1.045	Gear	24	17.0044.2.225	Bushing
10	17.0042.5.041	Bushing	25	17.0004.4.557	Upper Lateral Lever
11	17.0014.1.033	Screw	26	17.0045.1.106	Slide Block
12	08.6000.6.016	Screw	27	17.0032.1.074	Stud
13	17.0034.2.145	Stud	28	17.0094.5.311	Plate
14	17.0027.4.129	Lockwasher	29	17.0019.0.222	Washer
15	17.0044.2.224	Washer	30	17.0081.5.002	Plate

e-mail: service@amfreece.cz; parts@amfreece.cz; website: www.amfreece.com
Phones: +420 582 309 146 (Service), +420 582 309 286 (Spare Parts); Fax: +420 582 360 606

BEDPLATE ASSEMBLY

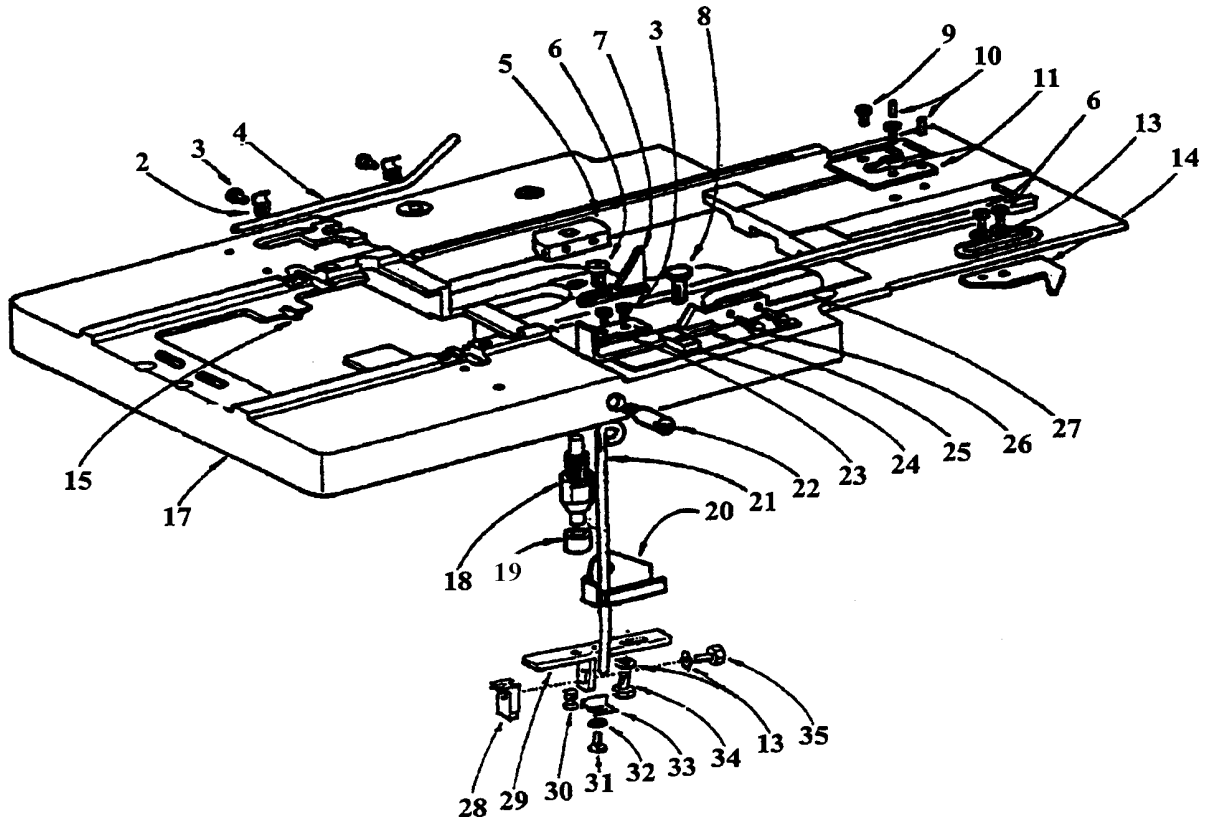

DET	PART NUMBER	DESCRIPTION	DET	PART NUMBER	DESCRIPTION
02	17.0082.6.000	Clamp	20	17.0082.5.944	Guide
03	08.6010.3.006	Screw	21	17.0027.1.405	Rod
04	17.0084.1.459	Guide	22	17.0013.5.068	Stud
05	17.0045.1.106	Slide Block	23	17.0081.6.201	Length Gauge
06	08.6000.5.010	Screw	24	17.0043.6.353	Plate
07	17.0082.5.996	Bumper	25	17.0004.9.509	Stop
08	08.6310.6.016	Screw	26	08.6000.4.012	Screw
09	17.0012.0.246	Screw	27	17.0064.5.753	Plate
10	17.0031.0.351	Pin	28	17.0082.6.227	Holder
11	17.0064.7.262	Plate	29	17.0064.6.327	Bracket
13	08.6850.5.000	Washer	30	17.0012.0.627	Pin
14	17.0081.8.554	Bumper	31	17.0012.0.234	Screw
15	17.0084.1.570	Guide	32	08.6850.4.000	Washer
17	17.0071.4.170	Bedplate	33	17.0083.9.240	Plate
18	17.0032.3.011	Stud	34	08.6000.5.012	Screw
19	17.0041.8.067	Roll	35	08.6310.5.008	Screw

CLAMP PLATE ASSEMBLY

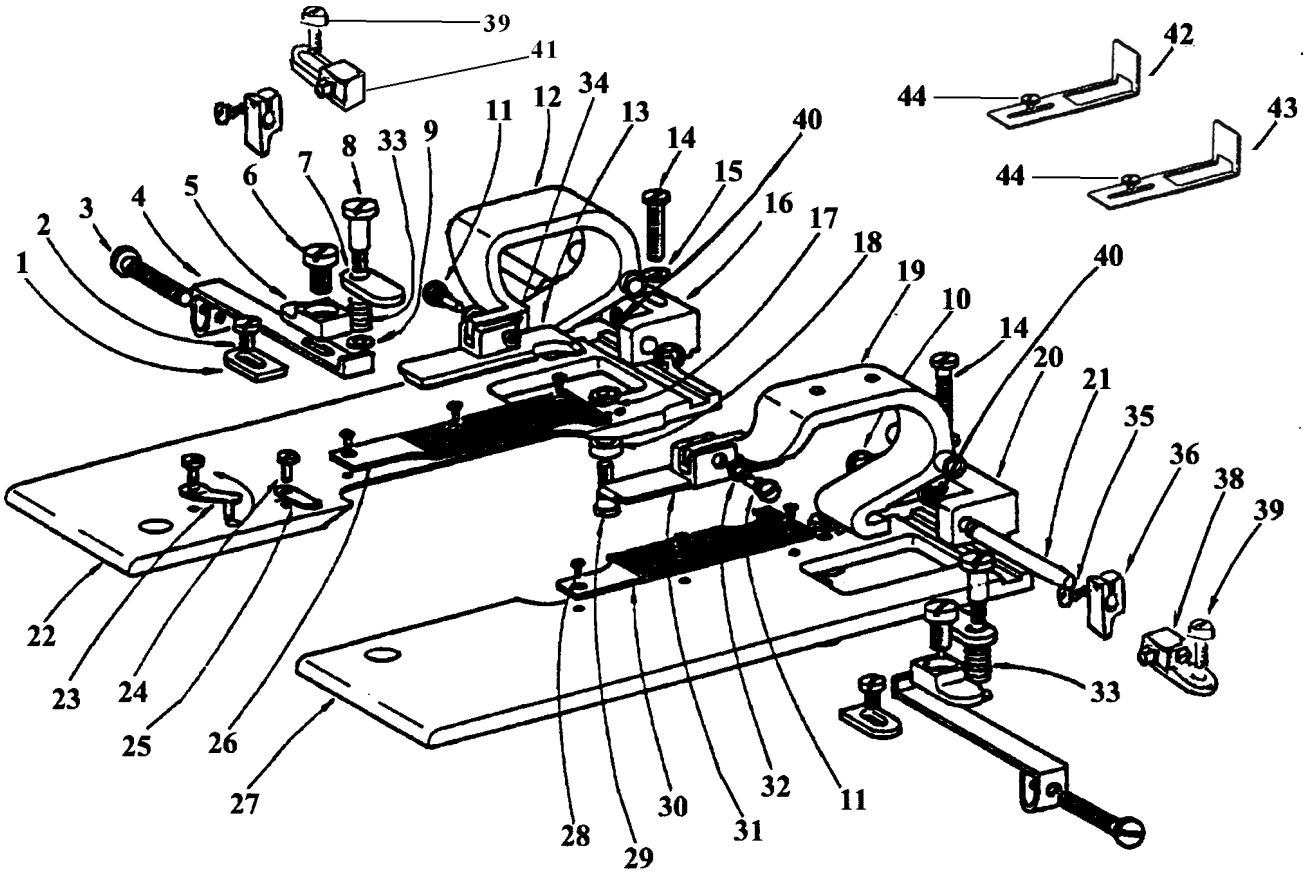

DET	PART NUMBER	DESCRIPTION	DET	PART NUMBER	DESCRIPTION
01	17.0081.5.047	Latch	23	17.0087.0.169	Knife
02	17.0012.0.572	Screw	24	17.0012.0.303	Screw
03	08.6000.4.025	Screw	25	17.0082.5.884	Clip
04	17.0082.5.893	Stop	26	17.0081.1.645	L.H. Clamp Mat
05	17.0064.6.130	Block	27	18.0081.5.414	R.H. Clamp Plate
06	17.0012.0.568	Screw	28	17.0012.3.054	Screw
07	17.0081.5.048	Slide	29	17.0013.1.047	Screw
08	17.0013.1.414	Stud	30	17.0081.1.646	R.H. Clamp Mat
09	17.0019.0.228	Washer	31	17.0066.7.158	R.H. Clamp Foot
11	17.0013.5.067	Screw	31	17.0066.7.162	R.H. Clamp Foot-High Rise
12	17.0063.6.289	L.H. Clamp Arm	32	17.0019.5.040	Lockwasher
13	17.0066.7.157	L.H. Clamp Foot	33	17.0026.0.217	Spring
13	17.0066.7.161	L.H. Clamp Foot-High Rise	34	17.0019.2.066	Curved Spring Washer
14	17.0012.0.573	Screw	35	17.0012.0.328	Screw
15	17.0019.0.551	Washer	36	17.0063.5.245	Spread Lock
16	17.0064.7.225	L.H. Block	38	17.0003.5.810	R.H. Stop
17	17.0016.1.328	Nut	39	17.0012.0.234	Screw
18	17.0041.8.005	Roll	40	08.6400.4.005	Screw
19	17.0063.6.290	R.H. Clamp Arm	41	17.0003.5.809	L.H. Stop
20	17.0064.7.224	R.H. Block	42	17.0082.4.548	Cloth Gauge L.
21	17.0034.1.234	Shaft	43	17.0082.4.547	Cloth Gauge R.
22	18.0081.5.402	L.H. Clamp Plate	44	17.0012.4.106	Screw

e-mail: service@amfreece.cz; parts@amfreece.cz; website: www.amfreece.com
Phones: +420 582 309 146 (Service), +420 582 309 286 (Spare Parts); Fax: +420 582 360 606

CLAMP YOKE ASSEMBLY

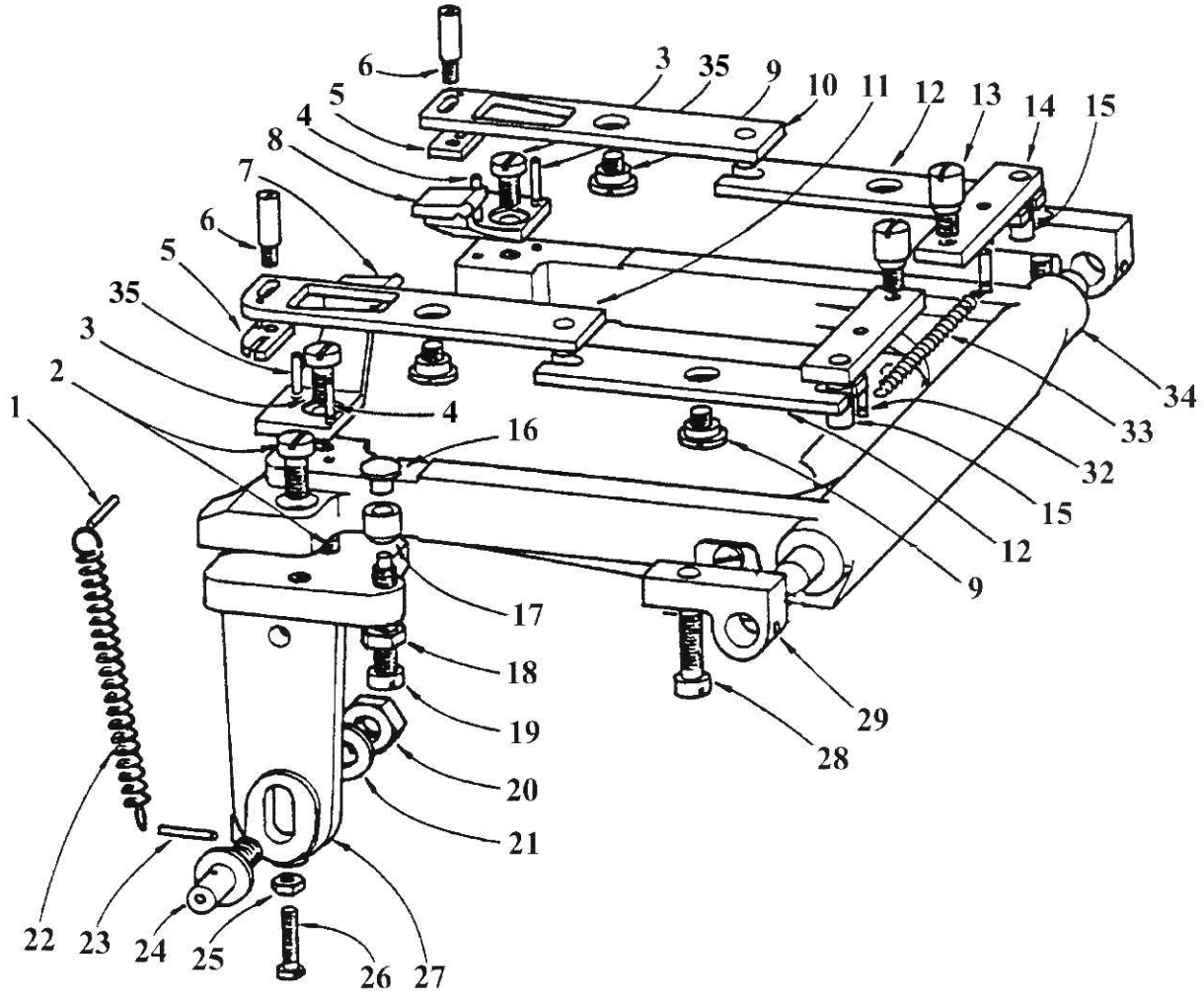

DET	PART NUMBER	DESCRIPTION	DET	PART NUMBER	DESCRIPTION
01	17.0031.0.430	Pin	18	08.6700.6.300	Nut
02	17.0012.0.233	Screw	19	17.0013.2.092	Screw
03	17.0012.0.262	Screw	20	17.0016.1.182	Nut
04	17.0031.2.022	Pin	21	17.0019.0.364	Washer
05	17.0081.5.091	Locking Plate	22	17.0026.3.257	Spring
06	17.0013.5.069	Screw	23	17.0031.0.423	Pin
07	11.2028.0.000	L.H. Pulldown	24	17.0033.3.133	Stud
08	11.2027.0.000	R.H. Pulldown	25	17.0016.1.165	Nut
09	17.0013.1.045	Screw	26	17.0012.0.267	Screw
10	17.0002.7.149	R.H. Rear Link	27	17.0076.5.087	Toggle Bracket
11	17.0002.7.148	L.H. Rear Link	28	08.6000.6.016	Screw
12	17.0082.2.054	Front Link	29	17.0074.4.058	Block
13	17.0013.1.416	Screw	32	17.0032.2.030	Pin
14	17.0081.3.064	Slide	33	17.0026.3.019	Spring
15	17.0031.4.031	Roll	34	17.0063.2.160	Clamp Lever
16	17.0094.0.029	Stop	35	12.1014.0.308	Pin Spring
17	17.0041.2.020	Roll			

CLAMPING LEVER ASSEMBLY

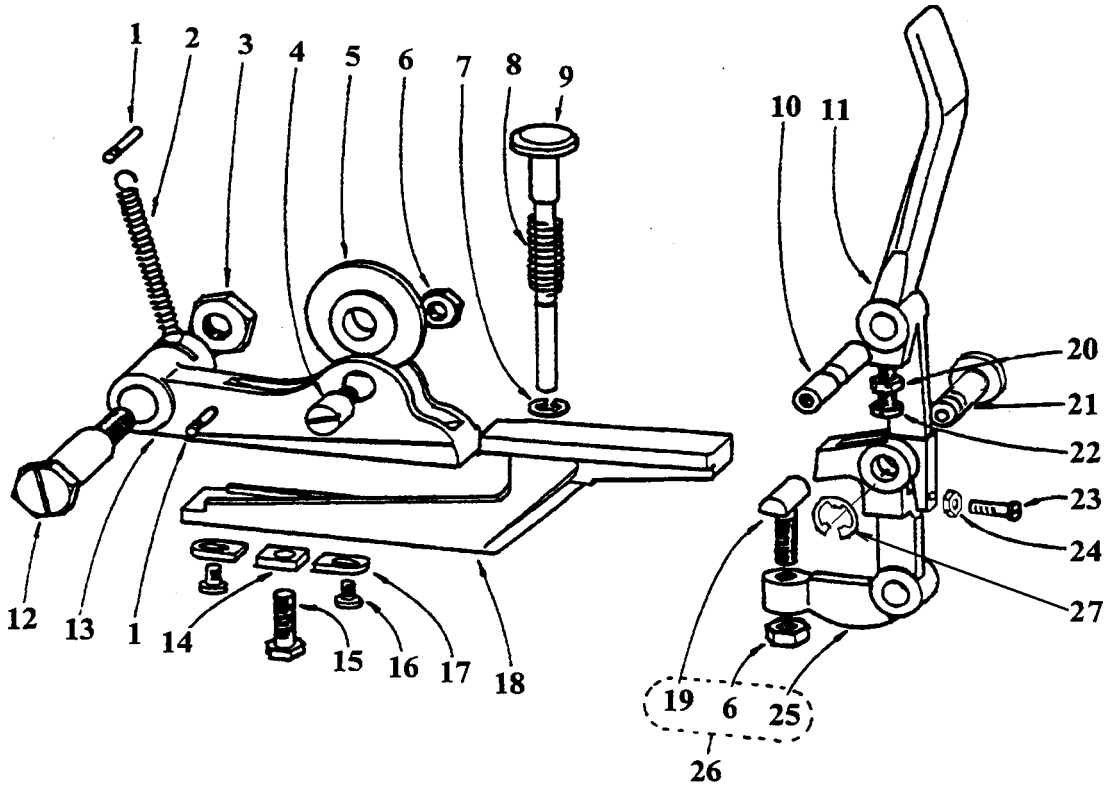

DET	PART NUMBER	DESCRIPTION	DET	PART NUMBER	DESCRIPTION
1	17.0031.1.089	Pin	15	08.6310.6.016	Screw
2	17.0026.3.256	Spring	16	17.0012.0.319	Screw
3	17.0016.1.291	Nut	17	17.0081.5.171	Washer
4	17.0033.1.011	Screw	18	17.0063.6.293	Clamp Arm
5	17.0044.1.255	Roll	19	17.0015.4.031	Adjustment Knob
6	08.6700.6.300	Nut	20	08.6710.4.000	Nut
7	17.0027.4.090	E-Ring	21	17.0032.8.133	Stud
8	17.0026.0.216	Spring	22	17.0012.0.267	Screw
9	17.0004.3.260	Stud	23	08.6010.3.012	Screw
10	17.0033.5.052	Shaft	24	17.0016.1.185	Nut
11	17.0061.5.027	Hand Clamp Lever	25	17.0063.6.262	Toggle Lever
12	17.0014.3.011	Pivot Screw	26	17.0004.4.812	Toggle Lever Arm
13	17.0061.2.346	Clamping Lever	27	17.0027.4.084	Lock Washer
14	17.0019.4.065	Washer			

e-mail: service@amfreece.cz; parts@amfreece.cz; website: www.amfreece.com
Phones: +420 582 309 146 (Service), +420 582 309 286 (Spare Parts); Fax: +420 582 360 606

STARTING LEVER AND SWITCH LEVER ASSEMBLY

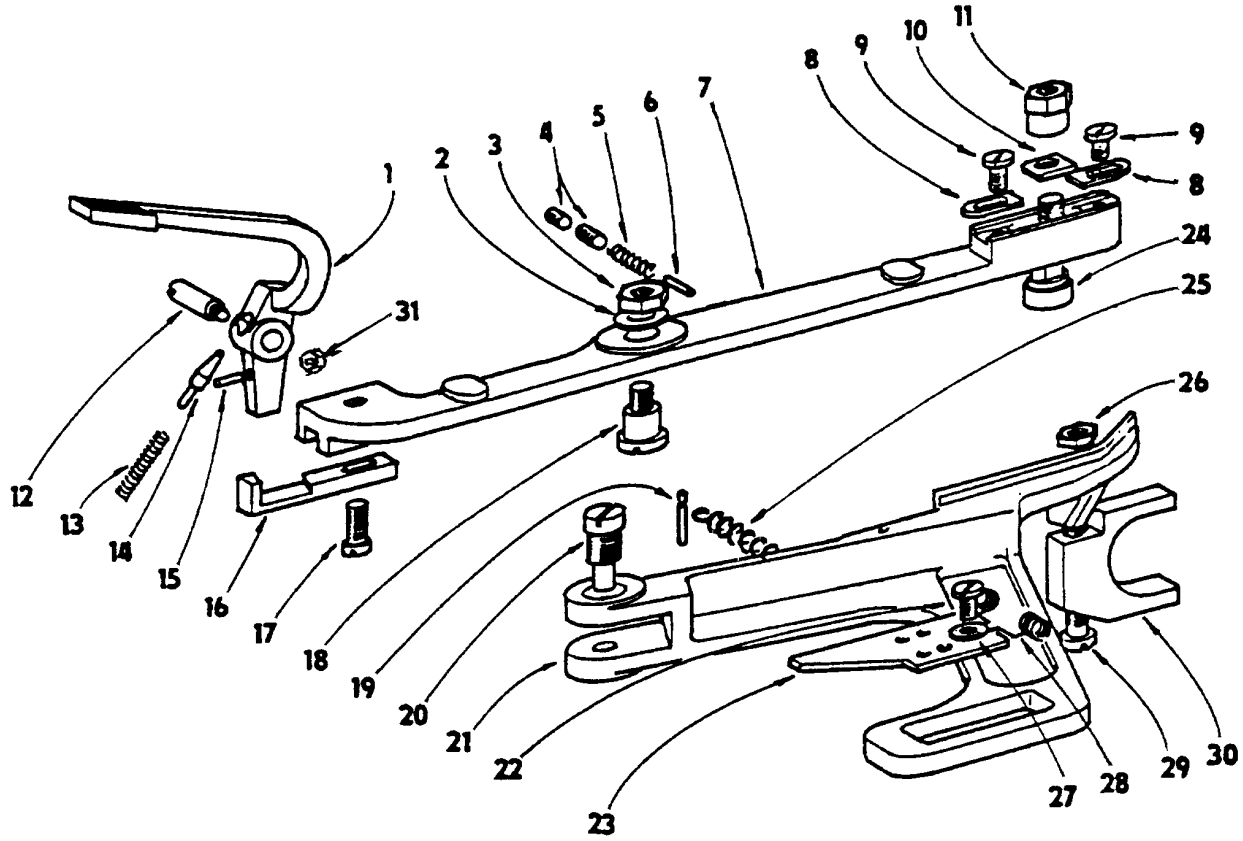

DET	PART NUMBER	DESCRIPTION	DET	PART NUMBER	DESCRIPTION
01	17.0063.6.295	Starting Lever	17	08.6000.5.012	Screw
02	17.0019.0.346	Washer	18	17.0033.2.030	Screw
03	08.6700.6.000	Nut	19	17.0031.0.396	Pin
04	17.0011.1.148	Screw	20	17.0033.3.134	Screw
05	17.0026.0.215	Spring	21	17.0063.6.460	Shifter Lever
06	17.0031.7.045	Pin	22	08.6000.4.008	Screw
07	17.0063.6.292	Switch Lever	23	17.0094.5.309	Plate
08	17.0081.5.171	Washer	24	17.0004.3.261	Roll
09	17.0012.0.234	Screw	25	01.5055.0.000	Spring
10	17.0019.4.065	Washer	26	17.0016.1.180	Nut
11	17.0016.1.258	Nut	27	08.6850.4.000	Washer
12	17.0033.1.010	Stud	28	17.0027.1.799	Spring
13	17.0026.0.214	Spring	29	17.0012.1.148	Screw
14	17.0031.3.030	Plunger	30	17.0062.5.144	Shifter Shoe
15	17.0011.1.364	Screw	31	17.0016.1.297	Nut
16	17.0062.5.015	Trip			

THREE FORK LEVER ASSEMBLY

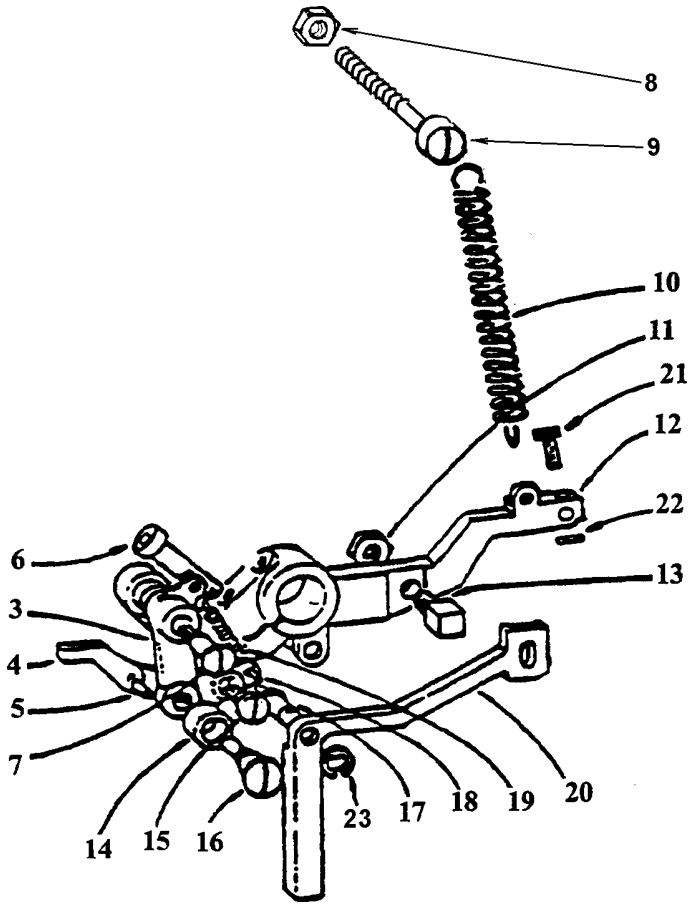

DET	PART NUMBER	DESCRIPTION	DET	PART NUMBER	DESCRIPTION
03	17.0061.2.290	Link	14	17.0041.8.008	Roll
04	17.0063.6.267	Lever	15	17.0013.1.417	Screw
05	17.0031.4.083	Pin	16	17.0013.1.419	Screw
06	17.0014.1.205	Screw	17	17.0032.0.264	Stud
07	17.0013.1.418	Screw	18	17.0031.1.091	Pin
08	17.0016.1.140	Nut	19	17.0026.3.126	Spring
09	17.0012.0.565	Screw	20	17.0063.5.175	Lever
10	17.0026.3.258	Spring	21	08.6200.4.025	Screw
11	17.0016.1.180	Nut	22	17.0016.1.328	Nut
12	17.0063.5.089	Lever	23	17.0027.4.090	E-Ring
13	17.0014.4.001	Stud			

e-mail: service@amfreece.cz; parts@amfreece.cz; website: www.amfreece.com
Phones: +420 582 309 146 (Service), +420 582 309 286 (Spare Parts); Fax: +420 582 360 606

TRIP LEVER ASSEMBLY

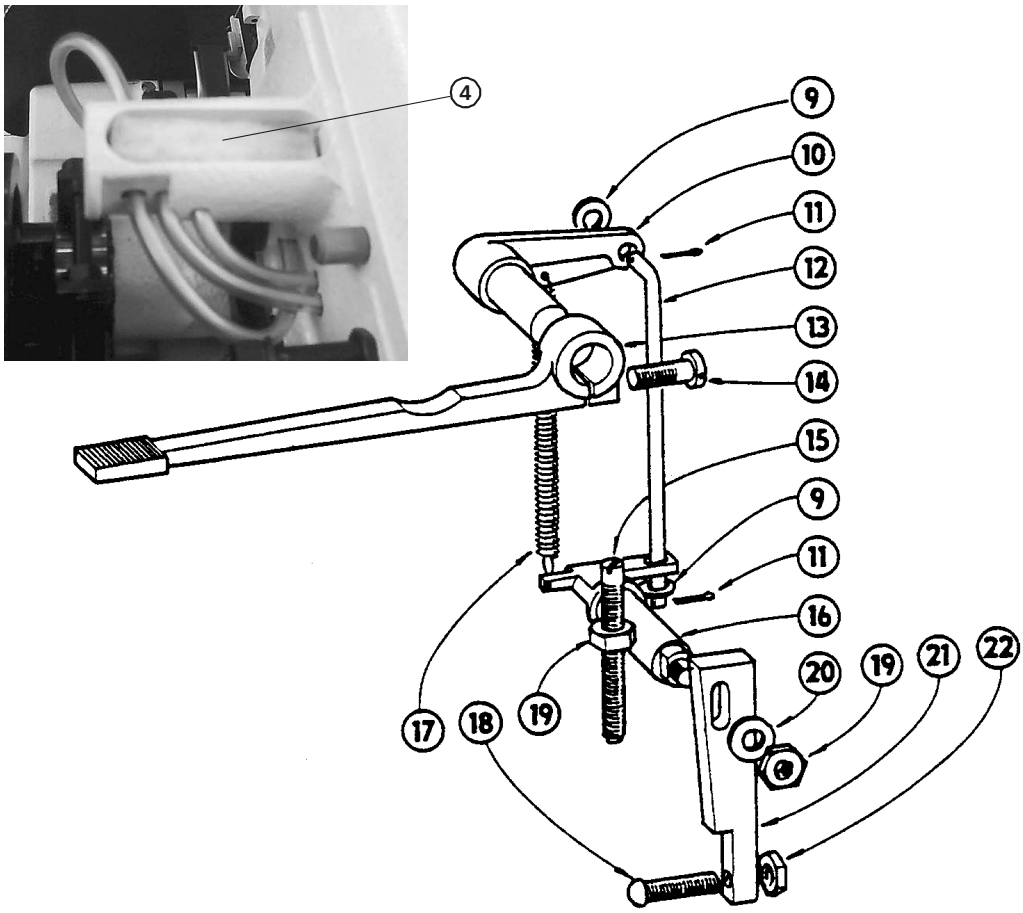

DET	PART NUMBER	DESCRIPTION	DET	PART NUMBER	DESCRIPTION
01			13	17.0061.2.345	Lever
02			14	17.0012.0.248	Screw
03			15	17.0011.3.022	Screw
04	11.1150.0.003	Felt	16	17.0032.6.200	Stud
05			17	17.0026.3.189	Spring
06			18	17.0012.4.011	Screw
07			19	17.0016.1.180	Nut
09	08.6850.4.000	Washer	20	17.0019.0.346	Washer
10	17.0061.2.344	Lever	21	17.0064.5.814	Trip Lever
11	17.0027.1.349	Split Pin	22	17.0016.1.179	Nut
12	17.0038.3.177	Link			

ROCKING LEVER

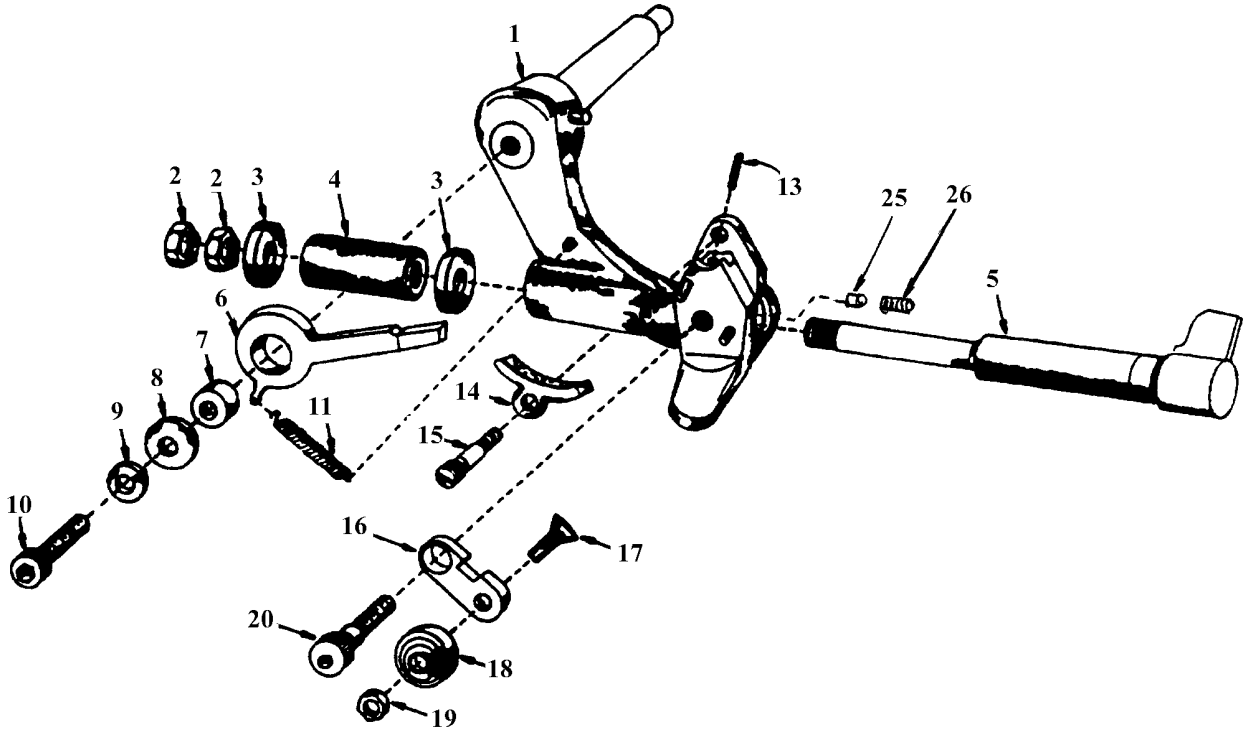

DET	PART NUMBER	DESCRIPTION
01	17.1098.1.050	Rocking Lever Asm.
02	17.0016.1.161	Nut
03	17.0019.0.441	Washer
04	17.0094.0.172	Elastomer Spring
05	17.0062.5.179	Bolt
06	13.1100.0.000	Latch
07	17.1099.0.000	Bushing
08	17.0019.0.367	Washer
09	17.0019.1.108	Lockwash
10	08.6000.6.020	Screw
11	01.5011.0.000	Spring
13	17.0026.1.084	Spring
14	17.0002.4.121	Brake Shoe
15	17.0013.1.413	Screw
16	17.0061.2.415	Link
17	17.0012.6.096	Screw
18	17.0041.8.400	Roll
19	17.0016.3.400	Nut
20	17.0013.1.461	Pivot Screw
25	17.0095.1.276	Leather Washer
26	08.6400.4.006	Screw

e-mail: service@amfreece.cz; parts@amfreece.cz; website: www.amfreece.com
Phones: +420 582 309 146 (Service), +420 582 309 286 (Spare Parts); Fax: +420 582 360 606

TOP THREAD TRIMMER ASSEMBLY

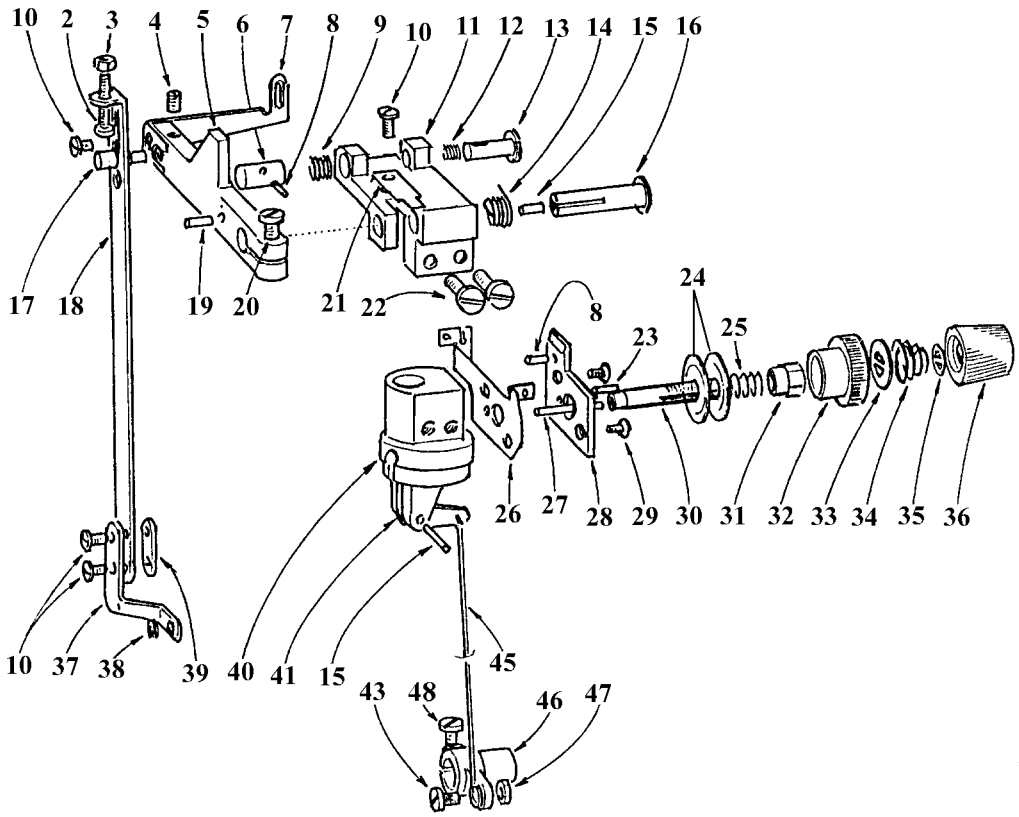

DET	PART NUMBER	DESCRIPTION	DET	PART NUMBER	DESCRIPTION
02	17.0015.2.110	Screw	25	17.0026.2.078	Spring
03	17.0016.1.185	Nut	25	17.0026.2.063	Spring-Jeans
04	08.6400.4.008	Screw	26	17.0082.1.167	Bracket
05	17.0063.5.266	Bracket	27	17.0031.0.440	Pin
06	17.0031.8.198	Stud	28	17.0082.6.273	Pin Holder
07	17.0083.9.268	Lever	29	17.0012.6.078	Screw
08	17.0031.0.328	Pin	30	17.0033.5.138	Stud
09	17.0026.0.553	Spring	31	17.0016.1.302	Nut
10	17.0012.4.103	Screw	32	17.0042.6.078	Bushing
11	17.0064.8.106	Holder	33	17.0082.8.060	Washer
12	17.0026.1.084	Spring	34	17.0026.2.072	Spring
13	17.0032.6.230	Stud	35	17.0019.5.019	Washer
14	17.0026.4.257	Spring	36	17.0016.3.069	Nut
15	17.0031.0.425	Pin	37	17.0082.2.481	Bracket
16	17.0032.8.134	Pin	38	17.0027.4.090	E-Ring
17	17.0032.2.204	Pin	39	17.0081.0.485	Lock Plate
18	17.0082.2.380	Lever	40	17.0044.1.240	Holder
19	17.0031.0.352	Pin	41	17.0061.6.028	Release Lever
20	08.6000.4.012	Screw	43	08.6000.4.012	Screw
21	17.0081.5.197	Cover Plate	45	17.0027.1.345	Tension Release Link
22	08.6000.5.010	Screw	46	17.0061.3.351	Lever
23	17.0031.0.438	Pin	47	08.6710.4.000	Nut
24	17.0082.8.071	Tension Disc	48	17.0012.0.229	Screw M5x10

TAKE-UP LEVER AND TOP THREAD TENSION ASSEMBLY

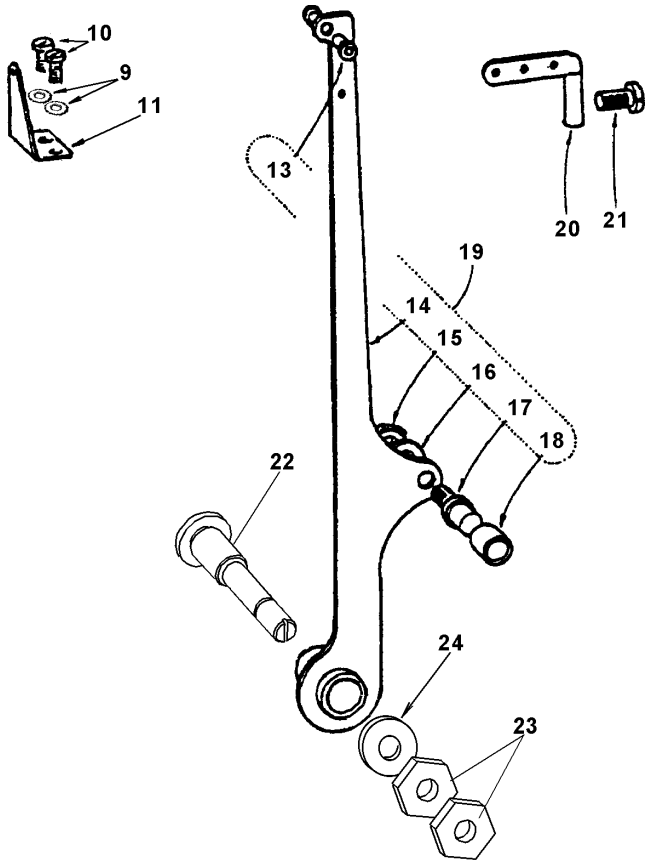

DET	PART NUMBER	DESCRIPTION
9	08.6850.5.000	Washer
10	08.6010.3.006	Screw
11	17.0082.1.136	Bracket
13	17.0042.1.332	Bushing
14	17.0004.9.849	Take-up Lever
15	17.0016.1.140	Nut
16	17.0019.0.346	Washer
17	17.0033.3.130	Stud
18	17.0041.8.003	Roll
19	17.0002.5.228	Take-up Lever Asm.
20	17.0027.2.053	Thread Guide
21	08.6010.4.012	Screw
22	18.0033.2.404	Stud
23	08.6710.8.400	Nut
24	17.0019.0.251	Washer

HEAD

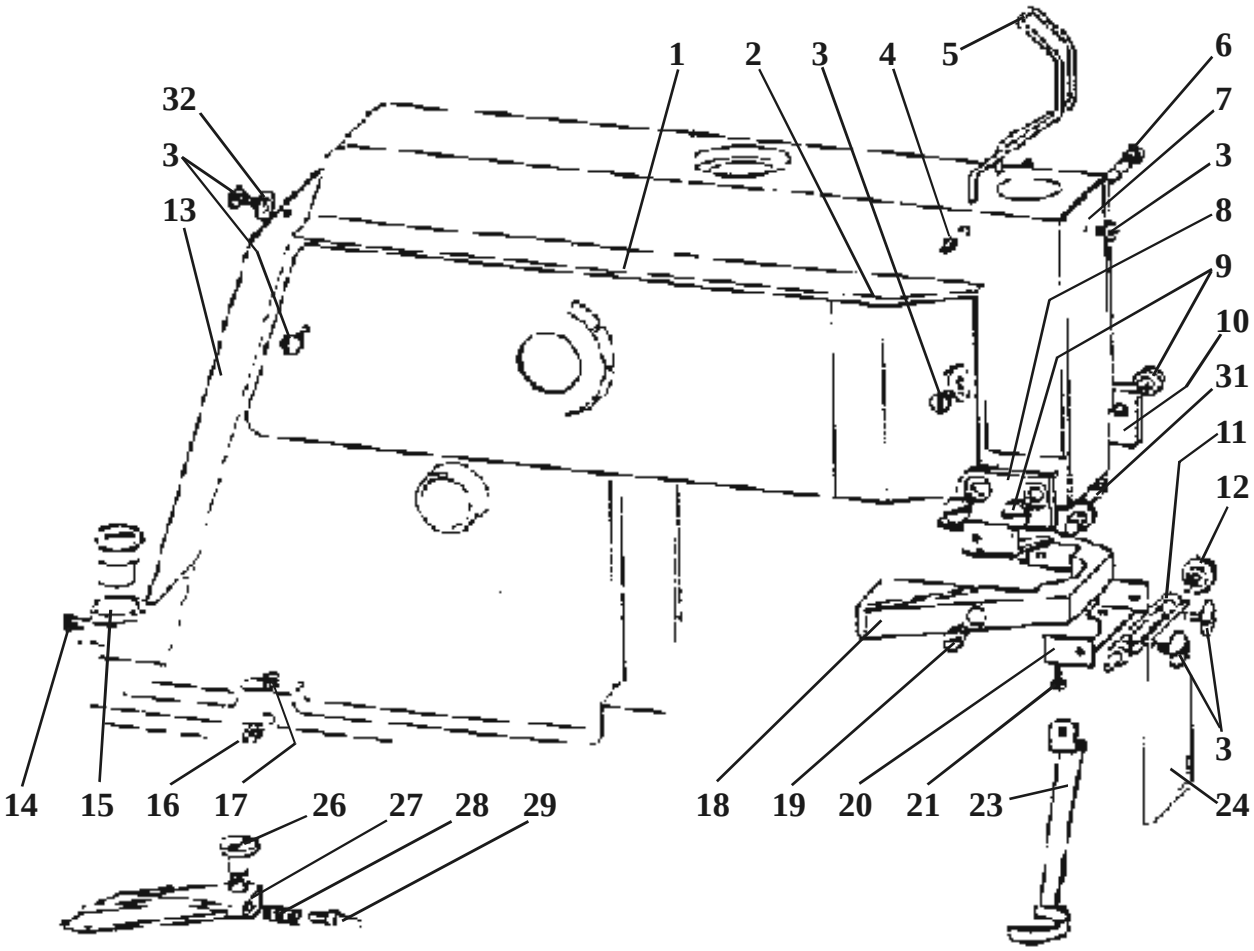

DET	PART NUMBER	DESCRIPTION	DET	PART NUMBER	DESCRIPTION
01	17.0004.8.932	Cover	16	17.0011.1.173	Screw
02	17.0004.8.933	Cover	17	17.0094.5.255	Screw
03	08.6200.4.006	Screw	18	17.0074.6.151	Guard
04	08.6400.3.008	Screw	19	08.6000.4.006	Screw
05	17.0027.1.419	Guard	20	17.0082.5.911	Bracket
06	17.0013.1.415	Screw	21	08.6010.3.006	Screw
07	17.0083.1.413	Cover	23	17.0027.1.370	Needle Guard
08	17.0064.7.000	Plate	24	17.0095.3.178	Eye Shield
09	08.6000.5.010	Screw	25		
10	17.0064.7.164	Plate	26	17.0033.1.170	Screw
11	17.0034.9.205	Holder	27	17.0063.5.214	Lever
12	22.0124.0.000	Screw	28	17.0026.0.214	Spring
13	17.0083.1.414	Plate	29	17.0031.3.030	Plunger
14	08.6000.4.012	Screw	31	08.6000.4.008	Screw
15	17.0004.7.157	Bushing	32	08.6850.4.000	Washer

TOP THREAD TRIMMER ASSEMBLY ACTUATOR

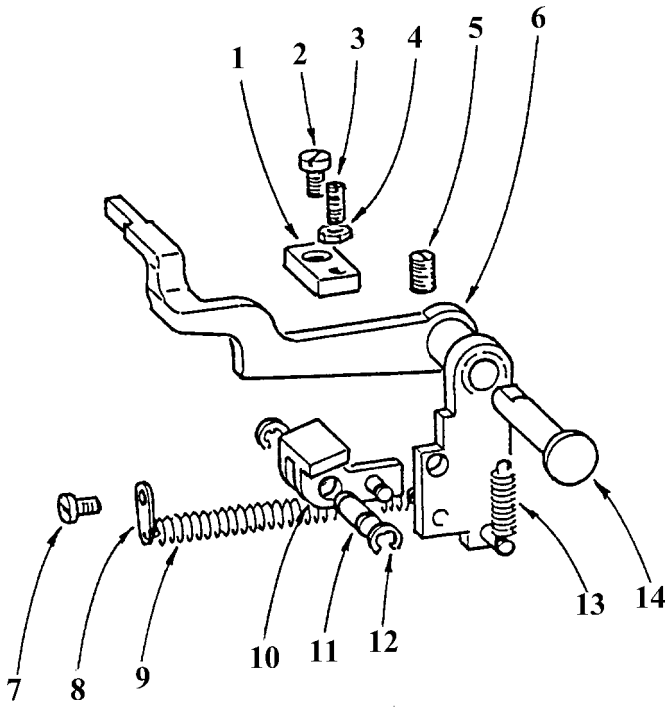

DET	PART NUMBER	DESCRIPTION
01	17.0064.6.284	Block
02	08.6010.4.008	Screw
03	17.0011.1.250	Screw
04	17.0016.1.165	Nut
05	17.0011.2.014	Screw
06	17.0004.4.950	Lever
07	08.6010.4.006	Screw
08	17.0082.6.191	Plate
09	17.0026.3.168	Spring
10	17.0004.4.951	Block
11	17.0032.2.305	Pin
12	17.0027.4.083	Lockwasher
13	17.0026.3.244	Spring
14	17.0032.8.209	Stud

RIGHT HAND STOP WHEEL

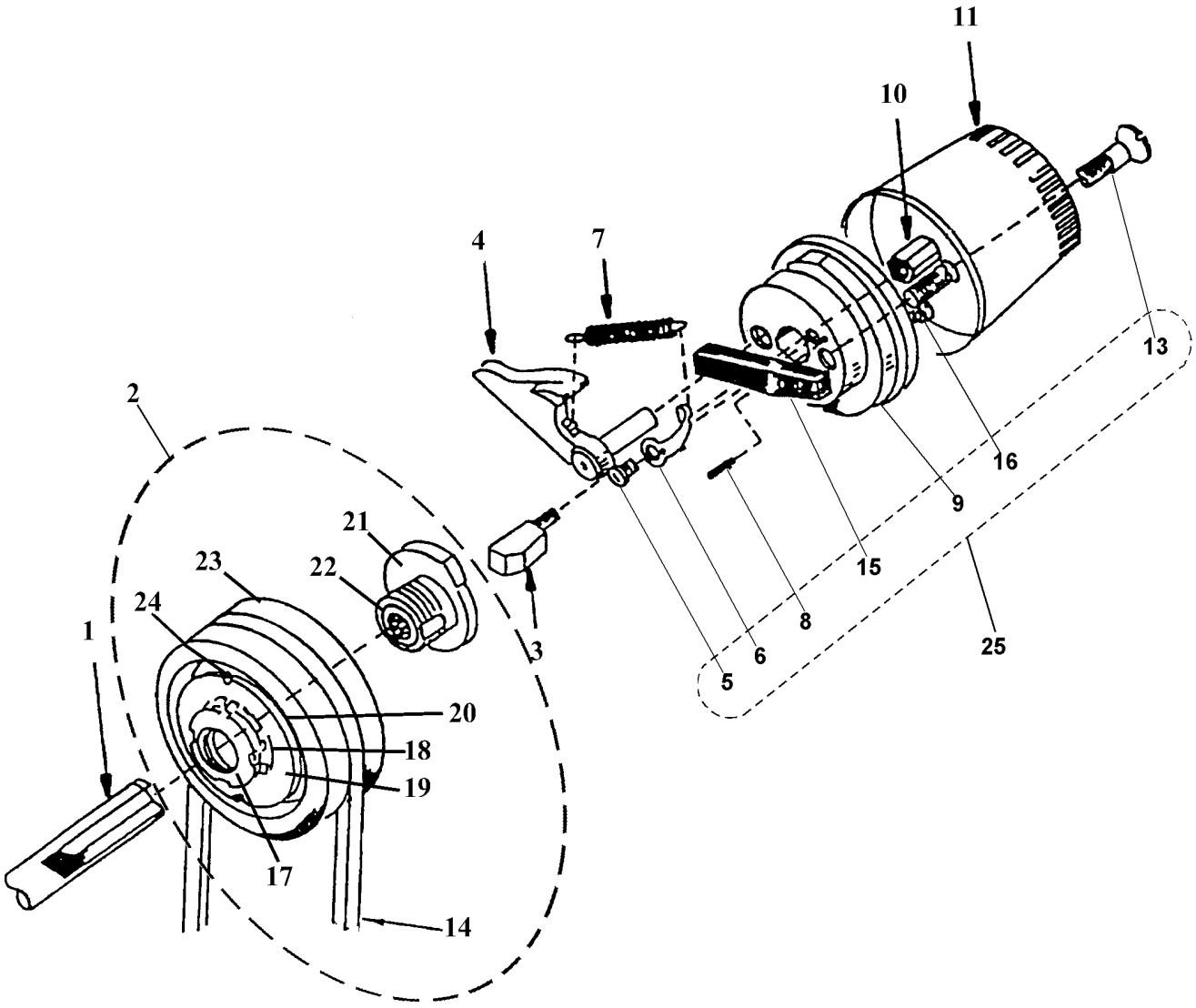

DET	PART NUMBER	DESCRIPTION	DET	PART NUMBER	DESCRIPTION
1	17.0034.9.201	Shaft	15	14.1155.1.000	Stop
2	17.0002.4.277	Stitch Drive Hub Asm.	16	08.6010.4.012	Screw
3	17.0021.0.021	Key	17	17.0017.4.075	Lock Nut
4	14.1089.0.000	Clutch Dog. Asm.	18	17.0019.5.047	Lockwasher
5	08.6010.4.008	Screw	19	17.0019.2.086	Spring Washer
6	10.1090.0.000	Spring Arm	20	17.0019.5.048	Washer
7	01.5450.0.000	Spring Arm Asm.	21	17.0067.2.186	Cam
8	12.1014.0.004	Roll Pin	22	01.7667.0.000	Ball Bearing
9	————	Only Part Of Assembly 17.1088.1.050	23	17.0052.0.426	Pulley
10	17.0016.1.308	Nut	24	17.0031.0.425	Pin
11	17.0051.0.066	Hand Grip	25	17.1088.1.050	R.H.Stop Wheel Ass.
13	08.6100.6.050	Screw			
14	12.5050.1.004	Stitch Wheel Belt - 50 Hz			
	12.5050.1.005	Stitch Wheel Belt - 60 Hz			

ACCESSORIES - STYLE 030

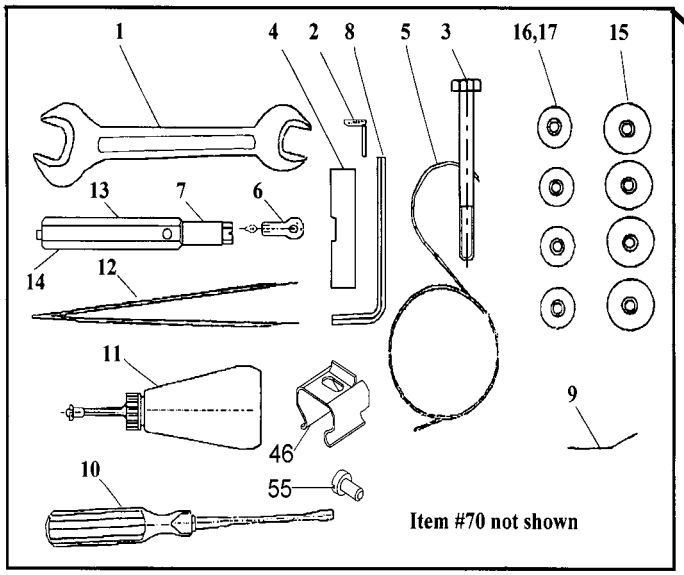

18

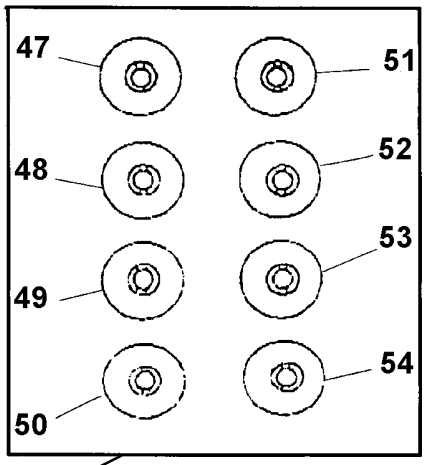

37

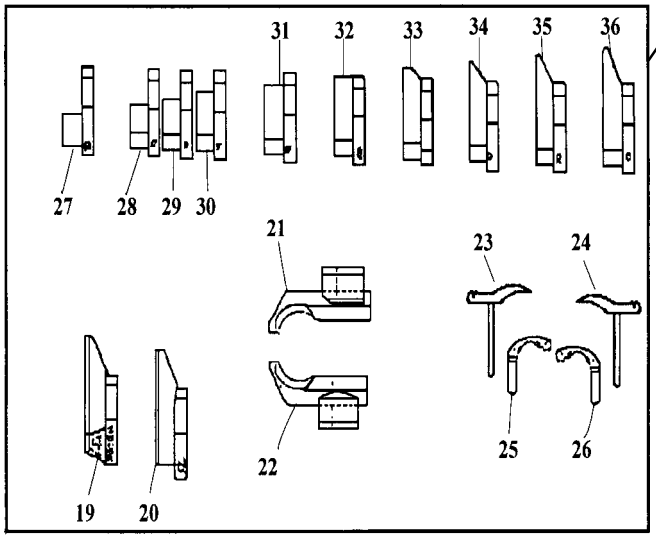

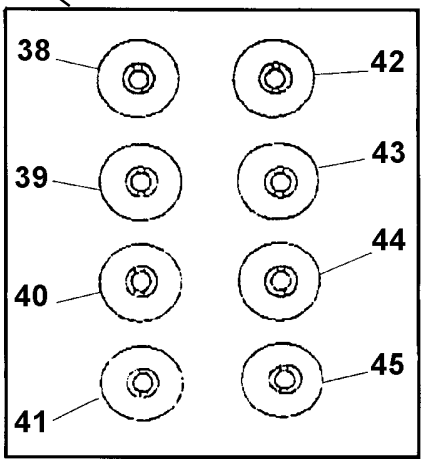

69

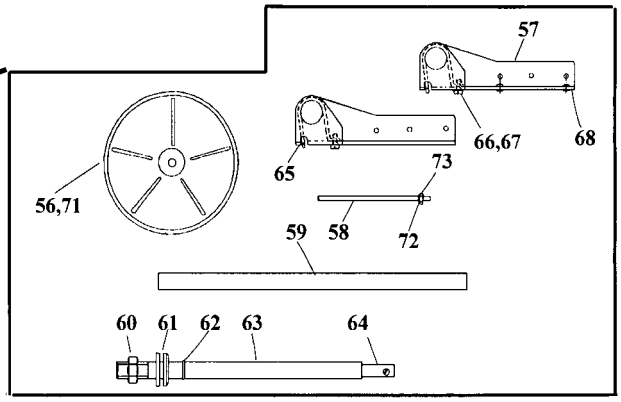

e-mail: service@amfreece.cz; parts@amfreece.cz; website: www.amfreece.com
Phones: +420 582 309 146 (Service), +420 582 309 286 (Spare Parts); Fax: +420 582 360 606

ACCESSORIES - STYLE 030

DET	PART NUMBER	DESCRIPTION	DET	PART NUMBER	DESCRIPTION
01	12.0008.6.107	Fork Spanner (13x16)	36	19.0064.5.858	38mm Cutting Steel
01	12.0008.6.109	Fork Spanner (8x10)	37	17.2044.0.001	S100-030A Accessory Kit
01	12.0008.6.111	Fork Spanner (5.5x7)	38	17.0067.4.101	Lateral Cam (0)
02	17.0064.7.275	Throat Plate Gauge	39	17.0067.4.102	Lateral Cam (3/5)
03	08.6300.8.065	Hex Head Bolt (4)	40	17.0067.4.133	Lateral Cam (0 x 10)
04	17.0082.6.242	Gauge	41	17.0067.4.135	Lateral Cam (0 x 13)
05	17.0027.1.223	Thread Wire	42	17.0067.4.137	Lateral Cam (0 x 16)
06	12.0008.6.200	Needle Threader	43	17.0067.4.139	Lateral Cam (0 x 19)
07	17.0016.3.105	Pin Remover	44	17.0067.4.141	Lateral Cam (0 x 22)
08	12.0008.6.103	Allen Key Wrench	45	17.0067.4.143	Lateral Cam (0 x 26)
08	12.0008.6.112	Allen Key Wrench	46	17.0028.3.117	Clip
09	17.0083.3.186	Oil Reservoir	47	17.0067.4.144	Lateral Cam (0 x 29)
10	17.0003.8.034	Screwdriver	48	17.0067.4.145	Lateral Cam (0 x 32)
10	17.0003.8.035	Screwdriver	49	17.0067.4.151	Lateral Cam (3/5 x 13)
11	05.1322.0.000	Can of Oil	50	17.0067.4.153	Lateral Cam (3/5 x 16)
12	12.0008.6.215	Tweezers	51	17.0067.4.157	Lateral Cam (3/5 x 22)
13	17.0084.1.564	Socket Wrench	52	17.0067.4.159	Lateral Cam (3/5 x 26)
14	17.0038.4.056	Pin	53	17.0067.4.160	Lateral Cam (3/5 x 29)
15	17.0095.1.273	Rubber (4)	54	17.0067.4.161	Lateral Cam (3/5 x 32)
16	17.0095.1.274	Rubber (4)	55	08.6010.3.006	Screw
17	17.0019.0.441	Washer (4)	56	17.0095.3.042	Washer Pad
18	17.0009.4.107	S100 Accessory Kit	57	17.0082.6.160	Arm (4)
19	18.0087.0.406	3/5 CB Eye Knife	58	17.0031.3.277	Pin (4)
20	17.0064.5.863	No Eye Knife	59	17.0084.1.590	Extension Tube
21	17.0066.7.162	R.H. Clamp Foot-Jeans	60	17.0016.1.255	M16 Nut
22	17.0066.7.161	L.H. Clamp Foot-Jeans	61	17.0019.0.585	Washer
23	17.0004.9.895	Forked Spreader	62	17.0044.1.509	Ring
24	17.0004.9.894	R.H. Spreader	63	17.0003.5.992	Tube Asm.
25	17.0069.4.049	Eye Looper	64	17.0012.0.280	M4 x 8 Screw
26	17.0069.4.048	Blind Looper	65	17.0082.6.159	Holding Socket (4)
27	19.0064.5.846	10mm Cutting Steel	66	17.0020.0.025	Washer
28	19.0064.5.951	13mm Cutting Steel	67	17.0012.0.283	M5 x 14 Screw (4)
29	19.0064.5.849	16mm Cutting Steel	68	17.0042.1.332	Bushing (4)
30	19.0064.5.952	19mm Cutting Steel	69	17.0003.6.156	S100 Thread Stand Asm.
31	19.0064.5.852	22mm Cutting Steel	70	02.0501.0.111	Needle (5)
32	19.0064.5.854	26mm Cutting Steel	71	17.0083.9.031	Bobbin Carrier
33	19.0064.5.855	29mm Cutting Steel	72	17.0019.1.107	Spring Washer (4)
34	19.0064.5.856	32mm Cutting Steel	73	17.0016.1.137	Nut (4)
35	19.0064.5.857	35mm Cutting Steel			

ACCESSORIES - STYLE 031

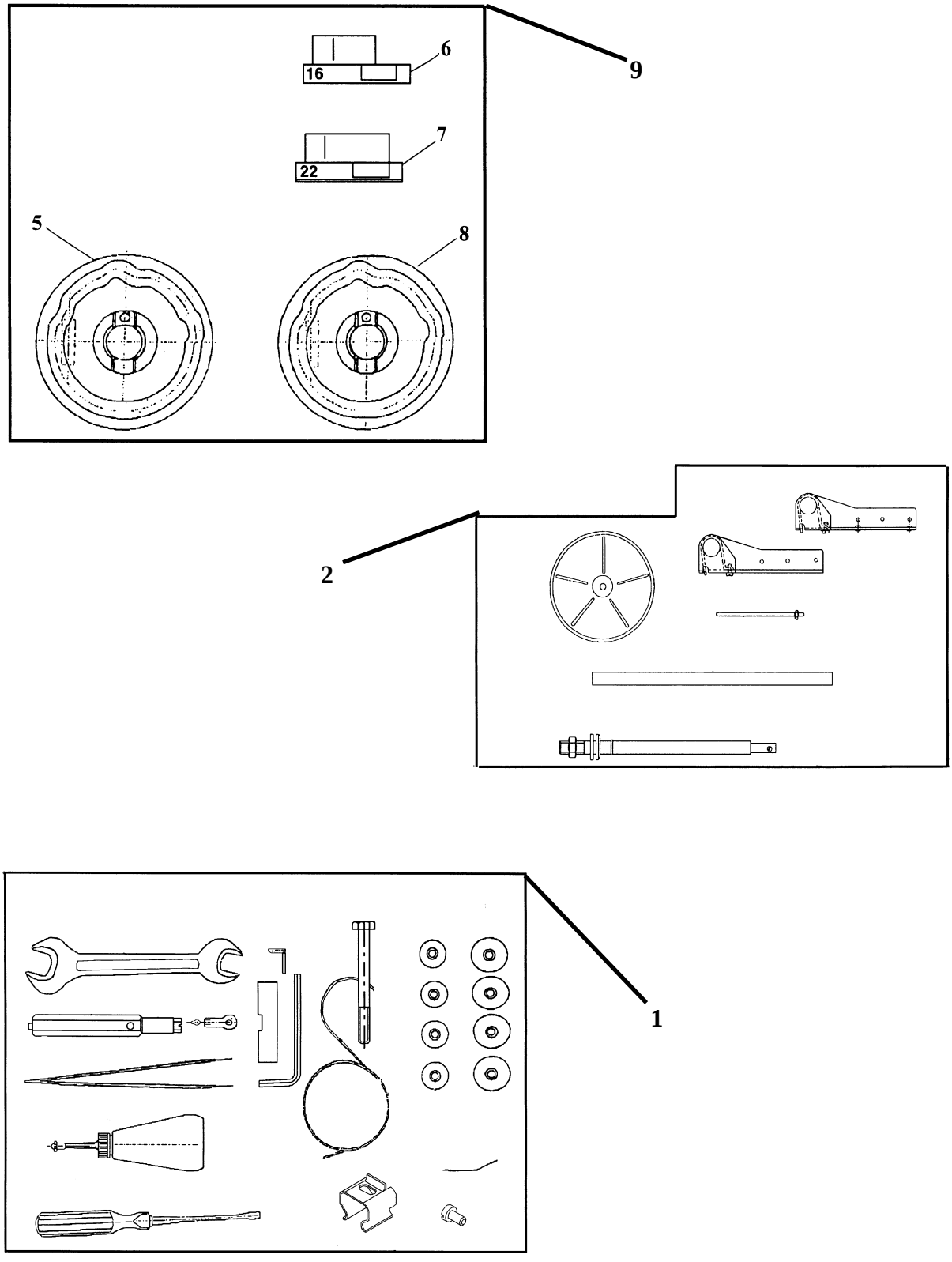

e-mail: service@amfreece.cz; parts@amfreece.cz; website: www.amfreece.com
Phones: +420 582 309 146 (Service), +420 582 309 286 (Spare Parts); Fax: +420 582 360 606

ACCESSORIES - STYLE 031

DET	PART NUMBER	DESCRIPTION
01	17.0009.4.107	S100 Accessory Kit
02	17.0003.6.156	S100 Thread Stand Asm.
05	17.0067.4.153	Lateral Cam (3/5 x 16)
06	19.0064.5.849	16mm Cutting Steel
07	19.0064.5.852	22mm Cutting Steel
08	17.0067.4.157	Lateral Cam (3/5 x 22)
09	17.2044.0.002	S100-030J Accessory Kit

ACCESSORIES - STYLE 032

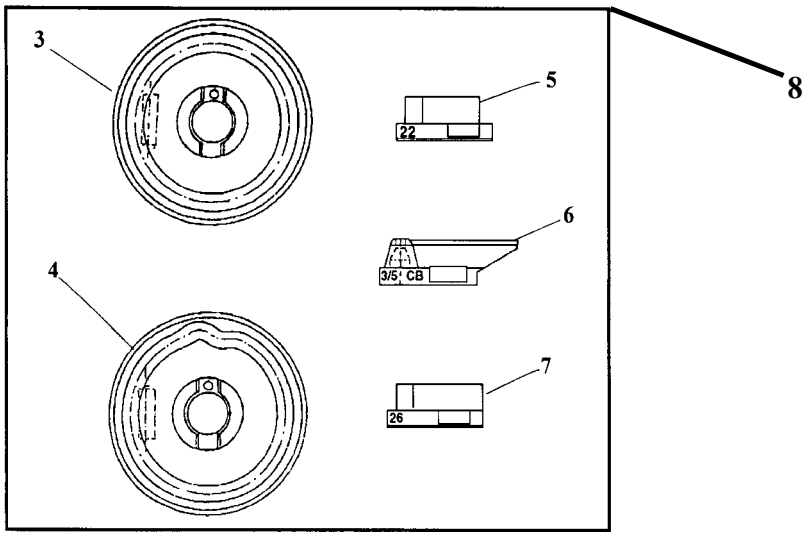

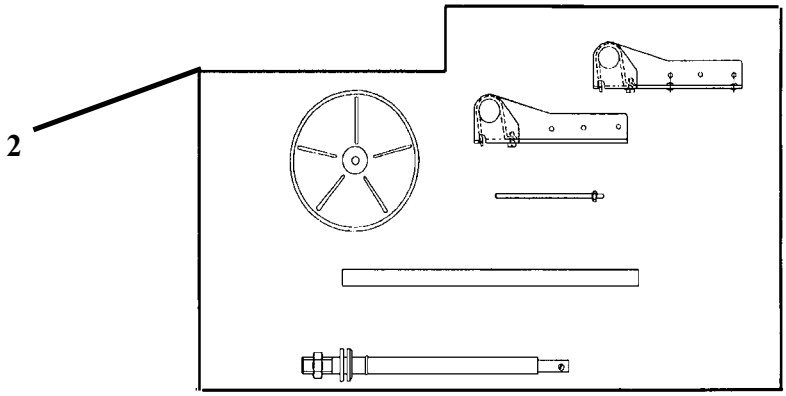

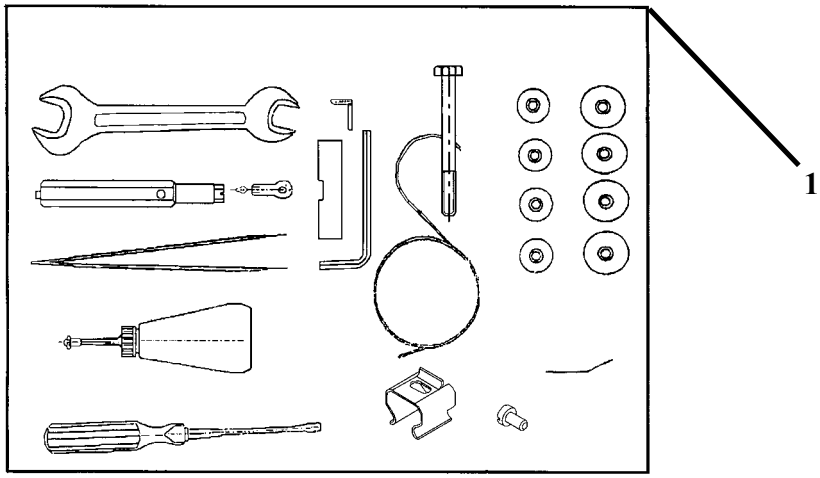

e-mail: service@amfreece.cz; parts@amfreece.cz; website: www.amfreece.com
Phones: +420 582 309 146 (Service), +420 582 309 286 (Spare Parts); Fax: +420 582 360 606

ACCESSORIES - STYLE 032

DET	PART NUMBER	DESCRIPTION
01	17.0009.4.107	S100 Accessory Kit
02	17.0003.6.156	S100 Thread Stand Asm.
03	17.0067.4.101	Lateral Cam (0)
04	17.0067.4.102	Lateral Cam (3/5)
05	19.0064.5.852	22mm Cutting Steel
06	18.0087.0.406	Eye Knife 3/5 CB
07	19.0064.5.854	26mm Cutting Steel
08	17.2044.0.003	S100-030T Accessory Kit

HEAD, CAM CASE AND BEDPLATE SUPPORT - ROUND EYE

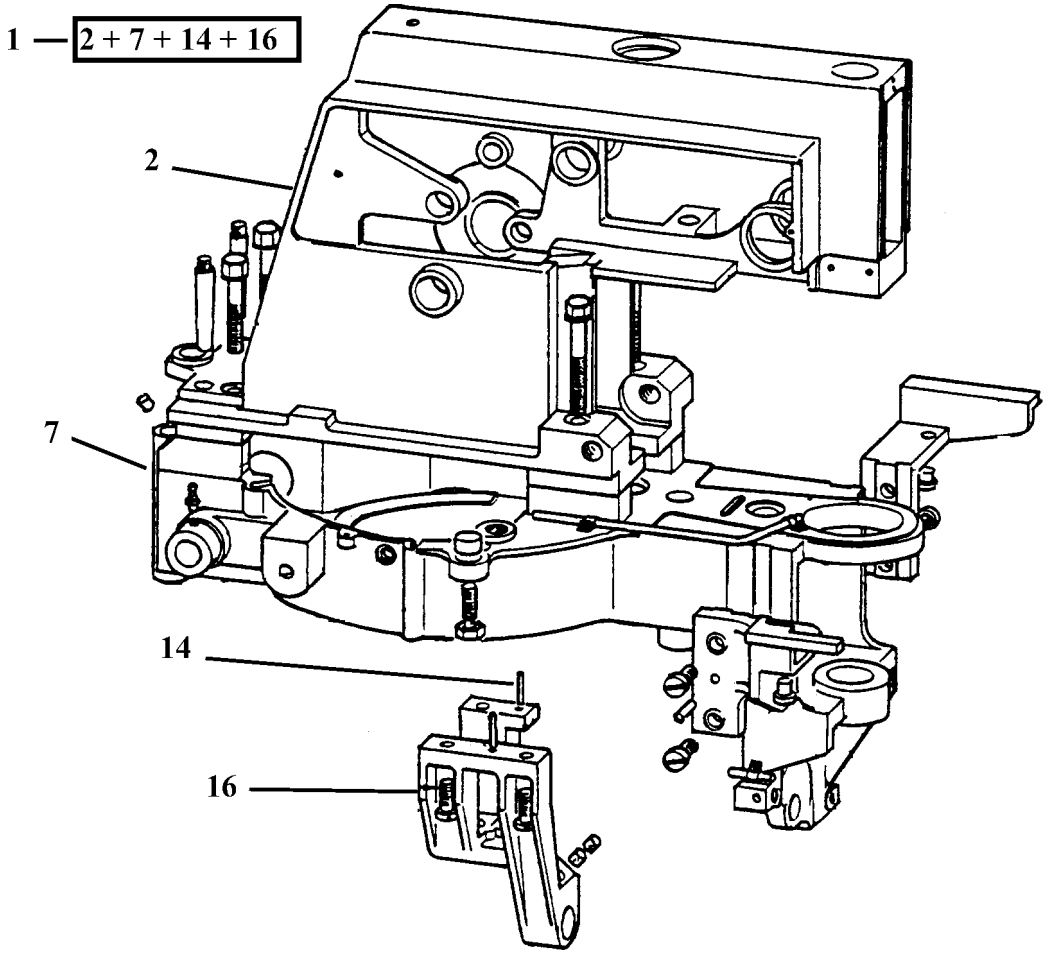

DET	PART NUMBER	DESCRIPTION
01	17.0004.0.001	Head Assembly

e-mail: service@amfreece.cz; parts@amfreece.cz; website: www.amfreece.com
Phones: +420 582 309 146 (Service), +420 582 309 286 (Spare Parts); Fax: +420 582 360 606

MAIN STITCH SHAFT - ROUND EYE

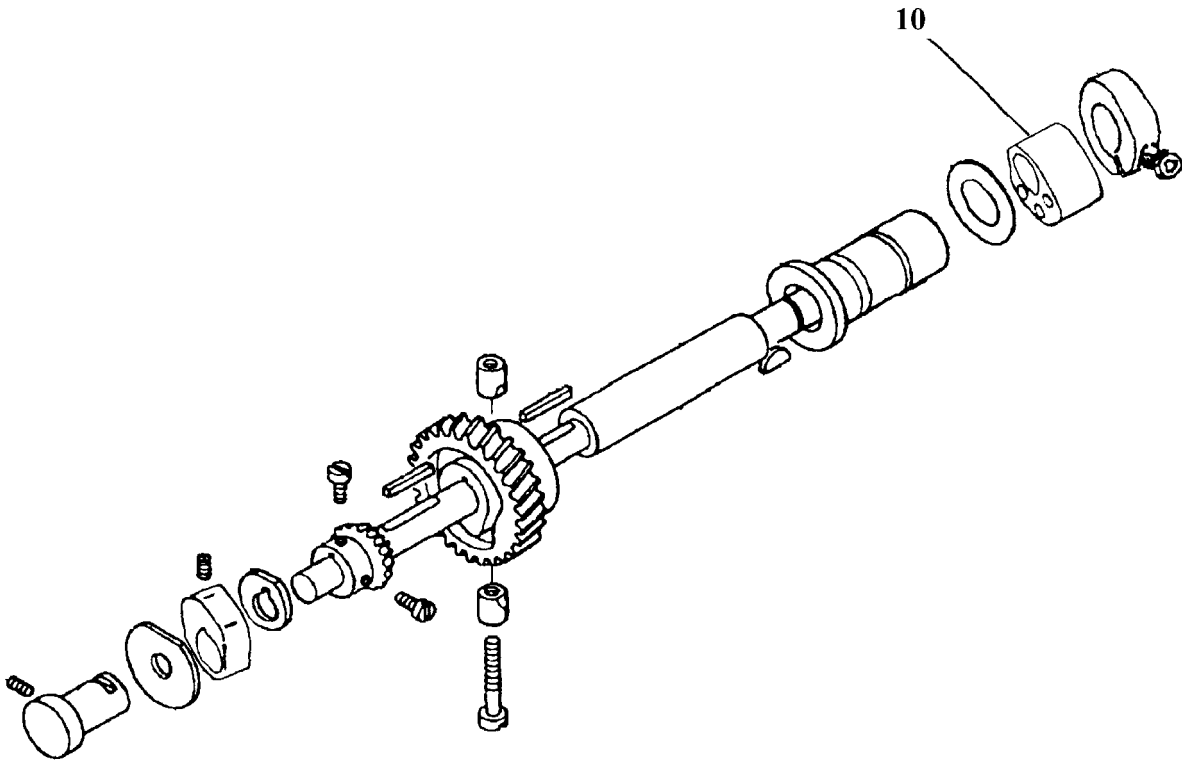

DET	PART NUMBER	DESCRIPTION
10	17.0067.2.183	Vibrator Cam

BITE ADJUSTMENT & BARREL - ROUND EYE

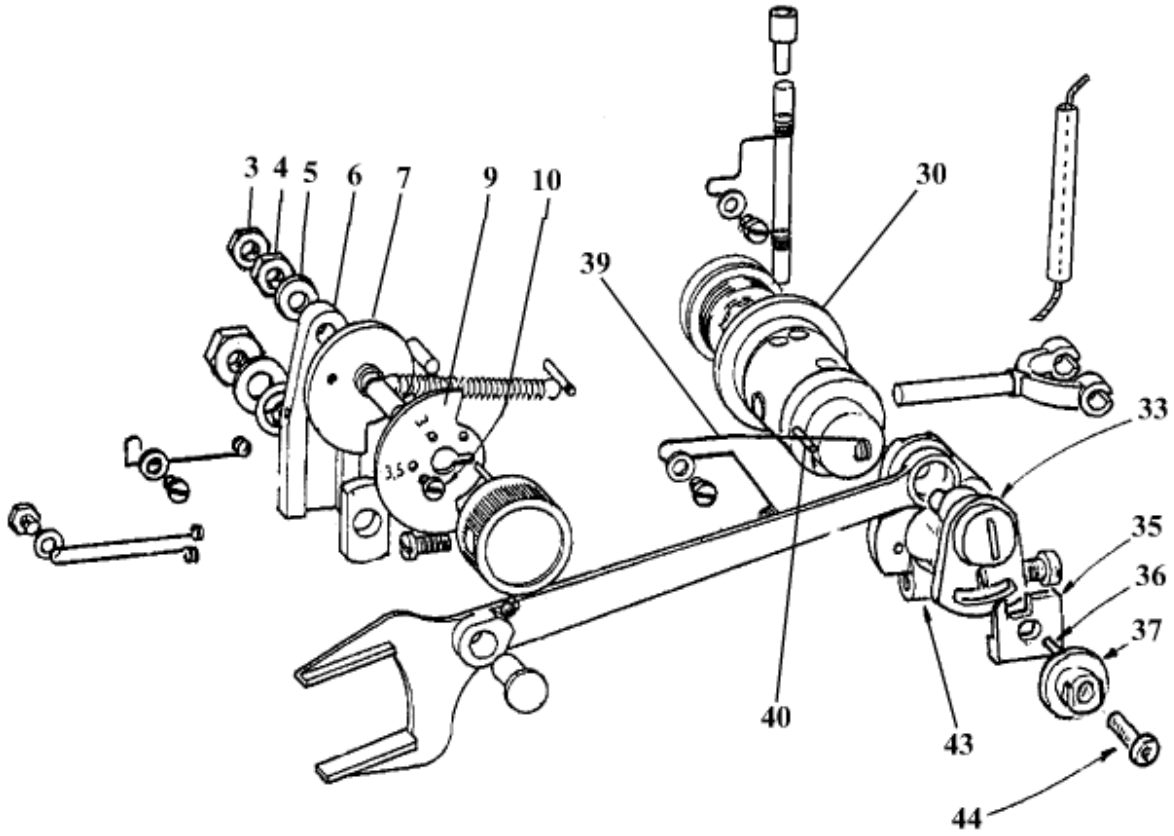

DET	PART NUMBER	DESCRIPTION
09	17.0081.4.312	Limiter
22	08.6000.4.010	Screw
30	17.0003.5.431	Yoke Assembly
33	17.0033.8.202	Eccentric
35	17.0081.4.295	Misalignment Limiter - Small Eye
	17.0081.4.296	Misalignment Limiter - Large Eye
36	17.0031.0.351	Pin
37	17.0044.1.234	Bushing
39	17.0027.1.413	Wick Guide
40	17.0031.0.425	Pin
41	17.0002.6.187	Bracket Assembly
43	17.0063.6.304	Clamp
44	08.6000.4.020	Screw

e-mail: service@amfreece.cz; parts@amfreece.cz; website: www.amfreece.com
Phones: +420 582 309 146 (Service), +420 582 309 286 (Spare Parts); Fax: +420 582 360 606

LOOPER AND SPREADER DRIVE - ROUND EYE

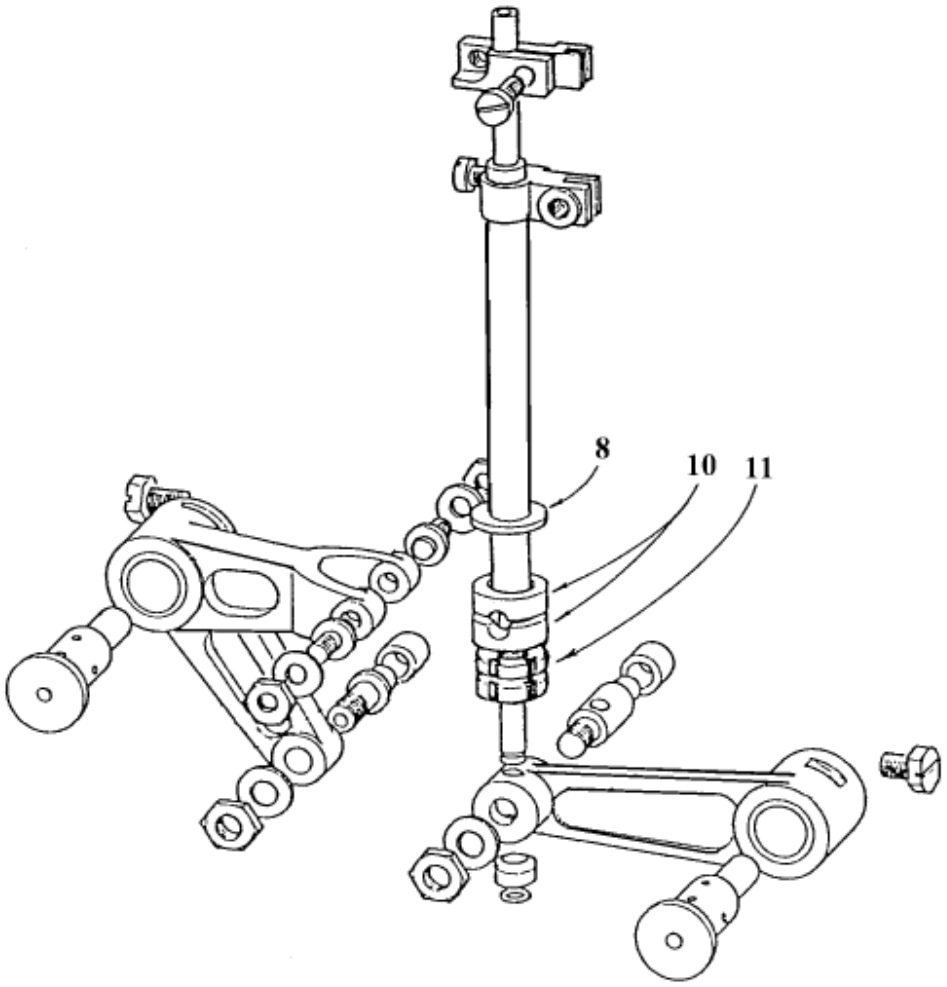

DET	PART NUMBER	DESCRIPTION
08	17.0004.9.248	Looper Spindle
10	17.0019.0.333	Washer
11	17.0017.4.054	Nut

RACE - ROUND EYE

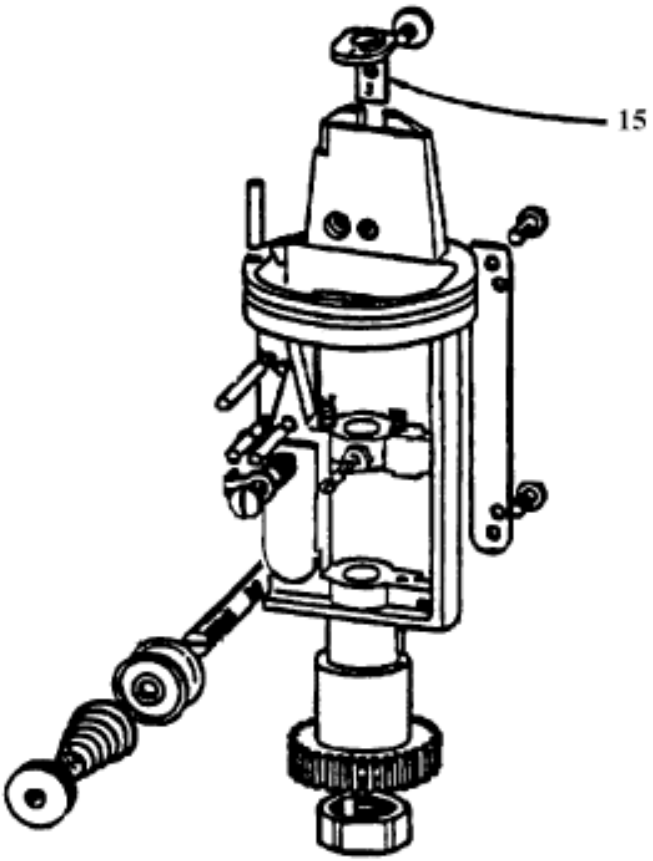

DET	PART NUMBER	DESCRIPTION
15	17.0064.7.400	Throat Plate

e-mail: service@amfreece.cz; parts@amfreece.cz; website: www.amfreece.com
Phones: +420 582 309 146 (Service), +420 582 309 286 (Spare Parts); Fax: +420 582 360 606

STITCH FEED - ROUND EYE

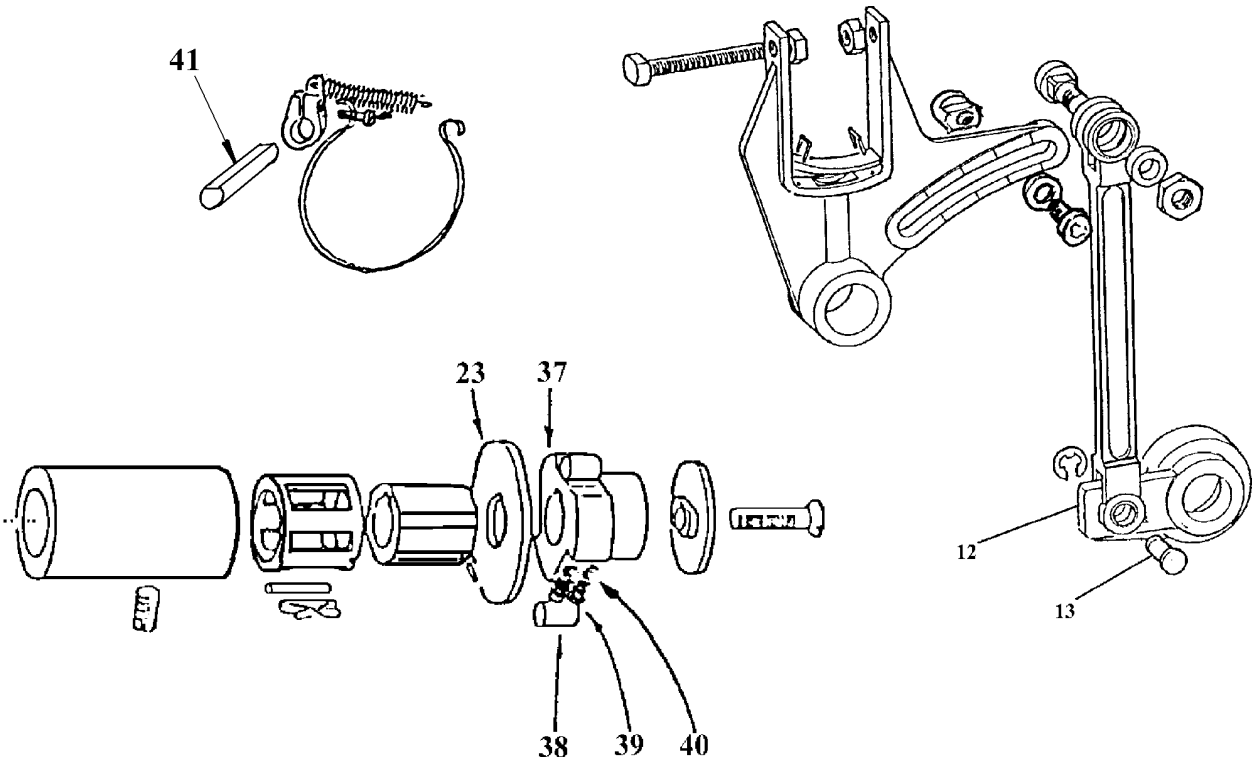

DET	PART NUMBER	DESCRIPTION
12	17.0064.1.098	Lever Guide
13	17.0032.8.227	Shaft
23	17.0019.5.050	Washer
37	17.0045.9.055	Bearing Housing
38	12.2099.1.006	Roller Bearing
39	17.0032.0.113	Pin
40	17.0026.0.213	Spring
41	17.0031.4.130	Stud

MAIN CAM AND BRAKE BAND - ROUND EYE

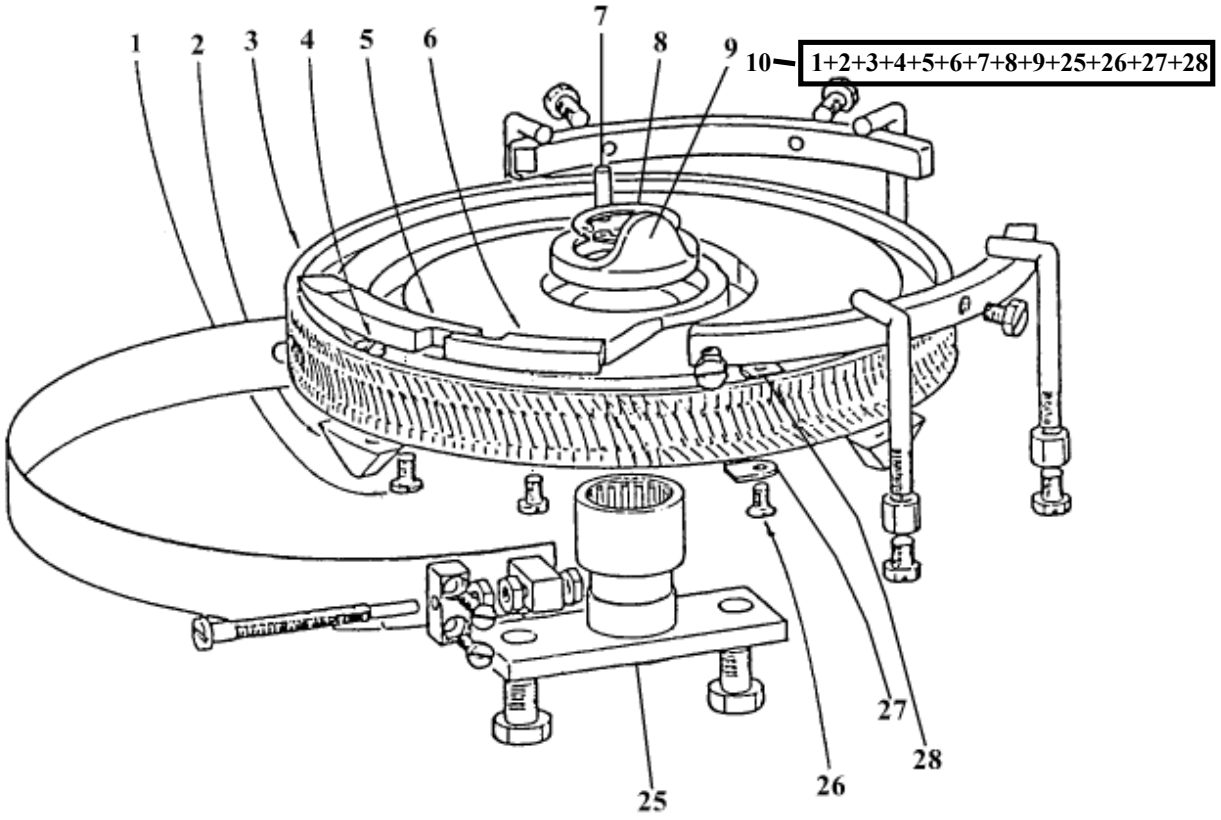

DET	PART NUMBER	DESCRIPTION
01	17.0012.0.246	Screw
02	17.0062.5.180	Clamping Wedge
03	17.0067.4.223	Main Cam - Small Eye
	17.0067.4.184	Main Cam - Large Eye
04	17.0012.0.677	Screw
05	17.0062.5.171	Long Stitch Ring
06	17.0062.5.172	Short Stitch Ring
10	17.0002.7.596	Main Cam Asm. - Small Eye
	17.0002.7.593	Main Cam Asm. - Large Eye
26	17.0012.6.118	Screw

e-mail: service@amfreece.cz; parts@amfreece.cz; website: www.amfreece.com
Phones: +420 582 309 146 (Service), +420 582 309 286 (Spare Parts); Fax: +420 582 360 606

SECTOR SHAFT AND GUARD - ROUND EYE

See Page 3-16

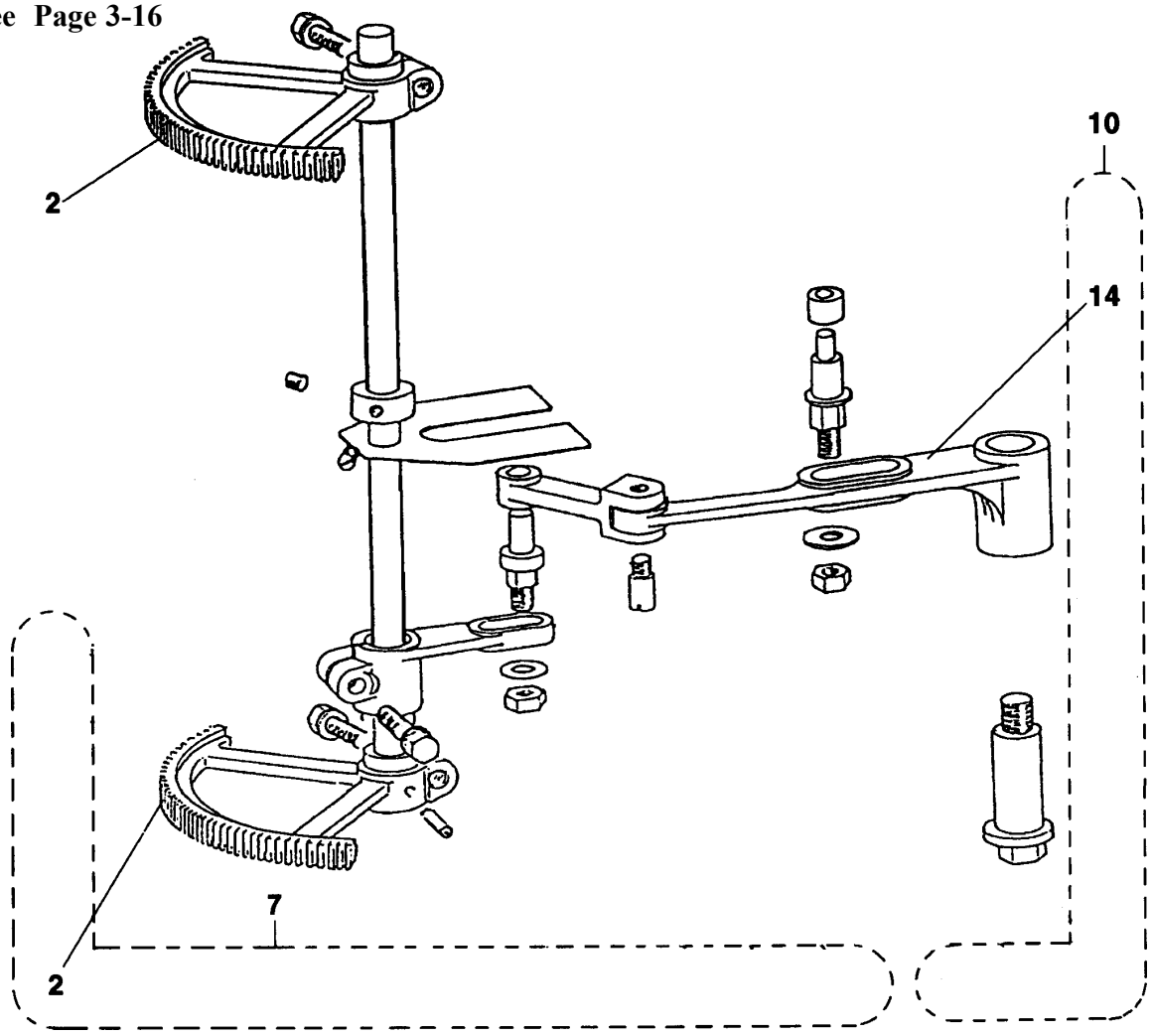

DET	PART NUMBER	DESCRIPTION
02	17.0055.3.028	Upper Sector
07	17.0006.0.151	Bracket Rotary Gear Asm.
10	17.0004.4.560	Ledver Change Asm.
14	17.0063.6.301	Lower Lateral Lever

CUTTING LEVER ASSEMBLY - ROUND EYE

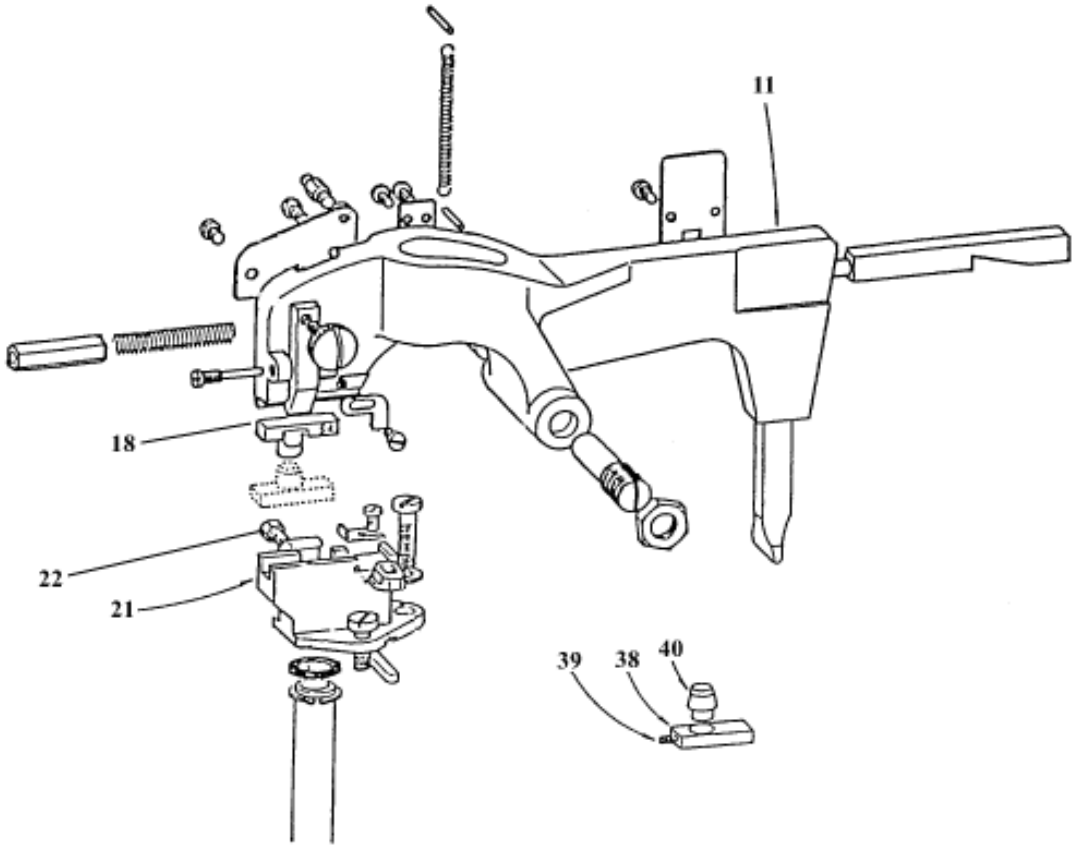

DET	PART NUMBER	DESCRIPTION
11	17.0063.6.309	Cutting Lever
18	See Pgs. 3-53/3-55	Cutting Steel
21	17.0074.4.501	Knife Holder
22	17.0082.4.525	Stop
38	17.0064.6.446	Cutter Holder
39	17.0012.0.328	Screw
40	See Pgs. 3-53/3-55	Knife

e-mail: service@amfreece.cz; parts@amfreece.cz; website: www.amfreece.com
Phones: +420 582 309 146 (Service), +420 582 309 286 (Spare Parts); Fax: +420 582 360 606

LATERAL CAM SHAFT ASSEMBLY - ROUND EYE

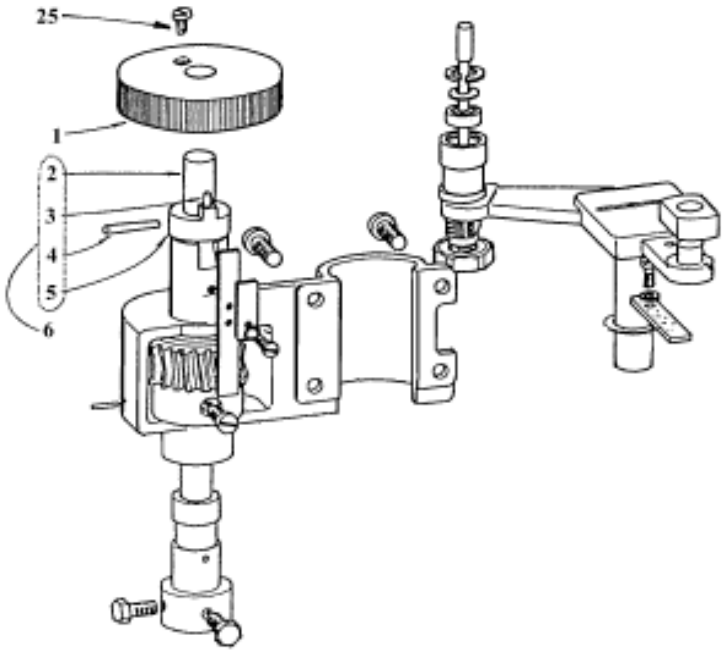

DET	PART NUMBER	DESCRIPTION
01	17.0067.4.224	Lateral Cam - Small Eye
	17.0067.4.185	Lateral Cam - Large Eye
05	17.0064.7.301	Shaft Washer
06	17.0004.3.478	Lateral Cam Shaft Asm.
25	17.0012.0.119	Screw

BEDPLATE ASSEMBLY - ROUND EYE

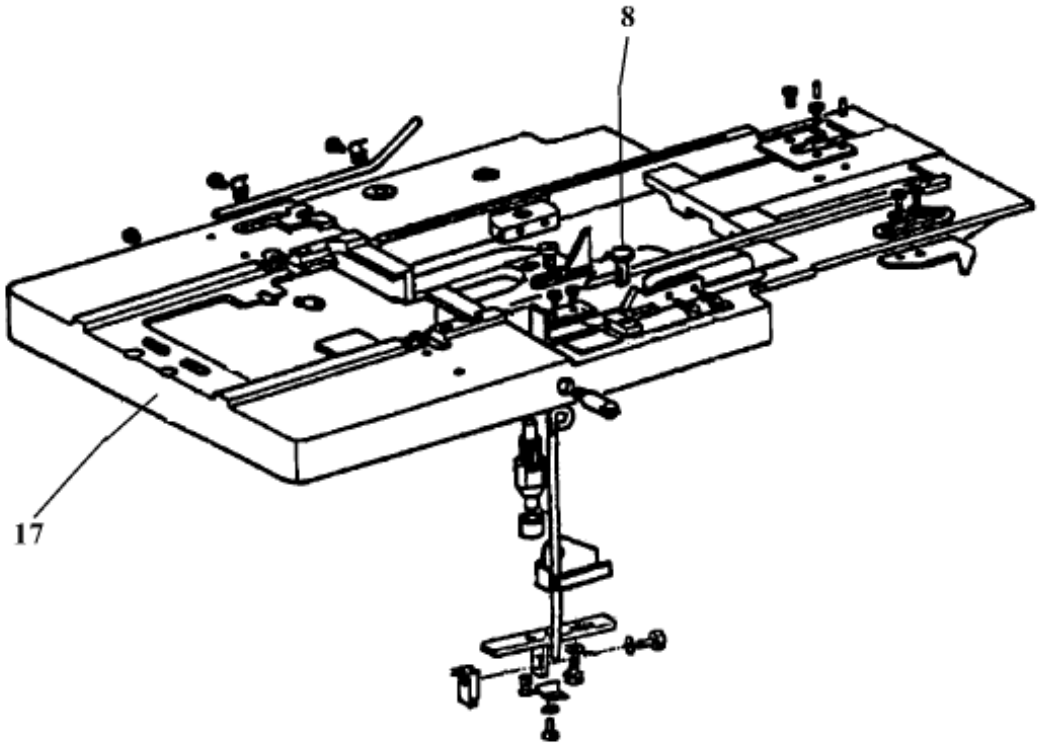

DET	PART NUMBER	DESCRIPTION
08	08.6310.5.008	Screw
17	17.0071.4.178	Bedplate - Round Eye

e-mail: service@amfreece.cz; parts@amfreece.cz; website: www.amfreece.com
Phones: +420 582 309 146 (Service), +420 582 309 286 (Spare Parts); Fax: +420 582 360 606

CLAMP PLATE ASSEMBLY - ROUND EYE

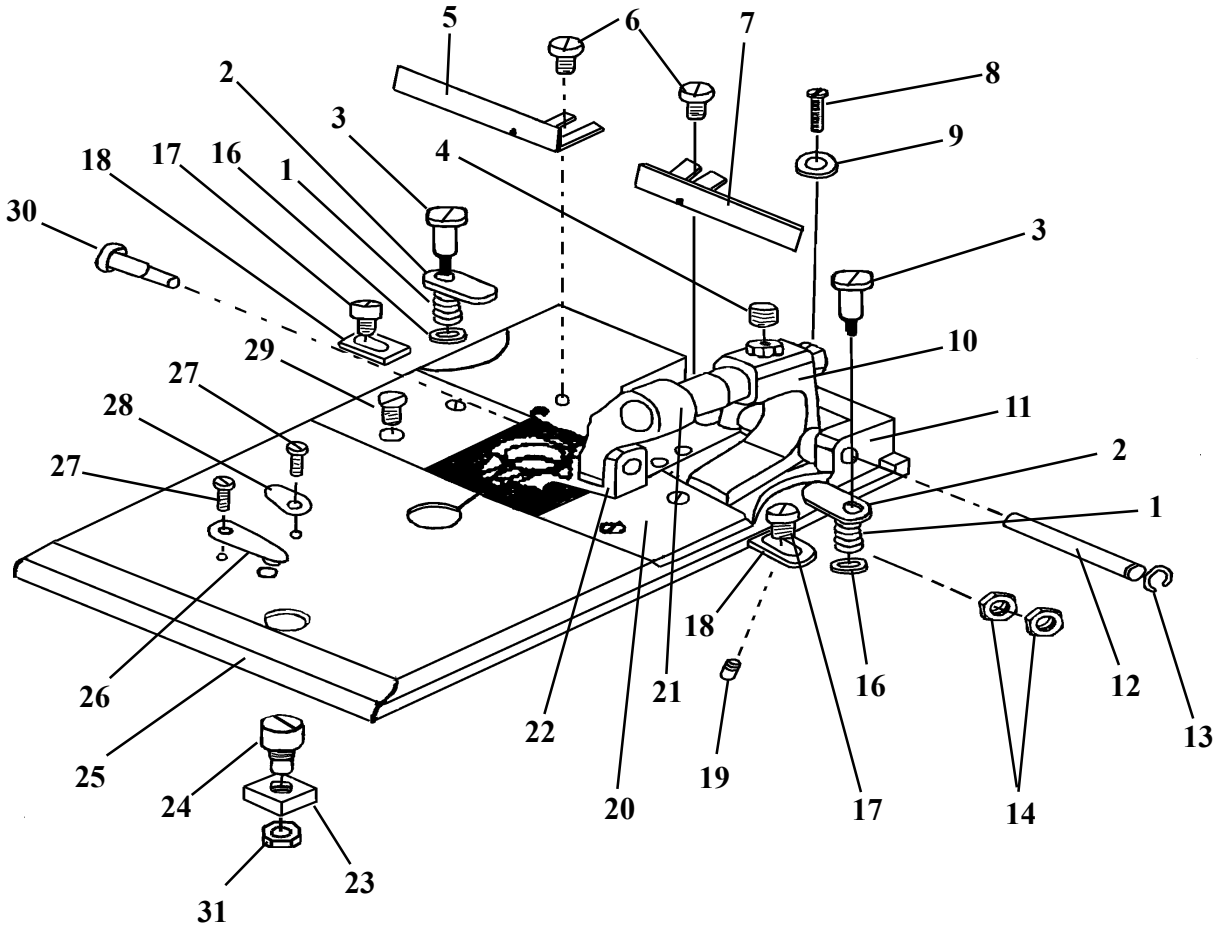

DET	PART NUMBER	DESCRIPTION	DET	PART NUMBER	DESCRIPTION
01	17.0026.0.217	Spring	20	10.2559.1.106	Clamp Mat*Large Eye Thick
02	17.0081.5.048	Slide		10.2559.1.010	Clamp Mat*Large Eye Thin
03	17.0013.1.414	Stud		10.2559.1.104	Clamp Mat*Small Eye Thick
04	08.6400.6.006	Screw		10.2559.1.004	Clamp Mat*Small Eye Thin
05	10.2567.0.000	R.H. Gauge	21	17.0002.8.102	Clamp Arm
06	17.0012.4.070	Screw	22	10.2552.2.106	Clamp Foot Large Eye Thick
07	10.2566.0.000	L.H. Gauge		10.2552.2.010	Clamp Foot Large Eye Thin
08	17.0012.0.573	Screw		10.2552.2.104	Clamp Foot Small Eye Thick
09	08.6852.4.000	Washer		10.2552.2.004	Clamp Foot Small Eye Thin
10	17.0063.5.310	Clamp Arm Base	23	17.0081.5.405	Block Nut
11	17.0064.7.224	R.H. Block	24	17.0013.9.400	Screw
12	17.0031.0.197	Shaft	25	17.0081.5.403	Clamp Plate
13	17.0027.4.106	Snap Ring	26	17.0087.0.169	Knife
14	08.6700.4.000	Nut	27	17.0012.0.303	Screw
16	17.0019.0.228	Washer	28	17.0082.5.884	Clip
17	17.0012.0.572	Screw	29	17.0012.6.400	Screw
18	17.0081.5.047	Latch	30	17.0013.1.485	Screw
19	08.6400.4.005	Screw	31	08.6700.5.000	Nut

THREE FORK LEVER ASSEMBLY - ROUND EYE

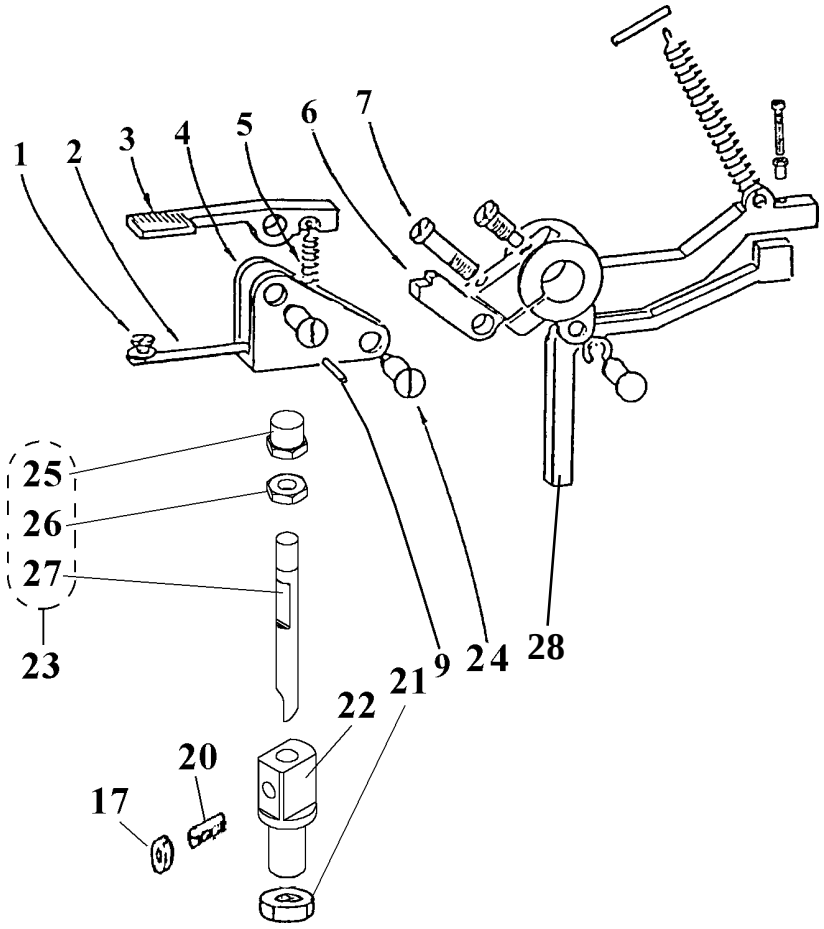

DET	PART NUMBER	DESCRIPTION
01	17.0012.4.051	Screw
02	17.0028.3.171	Flat Spring
03	17.0063.5.275	Lever
04	17.0064.6.404	Latch
05	17.0026.3.270	Spring
06	17.0063.5.276	Lever
07	17.0014.1.205	Screw
09	17.0031.0.426	Pin
17	17.0016.1.180	Nut
20	17.0011.3.141	Screw
21	17.0016.1.292	Nut
22	17.0042.4.150	Stitch Rod Bushing
23	17.0033.0.217	Stitch Rod Assembly
24	17.0013.1.458	Screw
25	17.0016.3.118	Nut
26	17.0016.1.094	Nut
27	17.0033.0.218	Stitch Rod
28	17.0063.5.175	Lever

e-mail: service@amfreece.cz; parts@amfreece.cz; website: www.amfreece.com
Phones: +420 582 309 146 (Service), +420 582 309 286 (Spare Parts); Fax: +420 582 360 606

HEAD - ROUND EYE

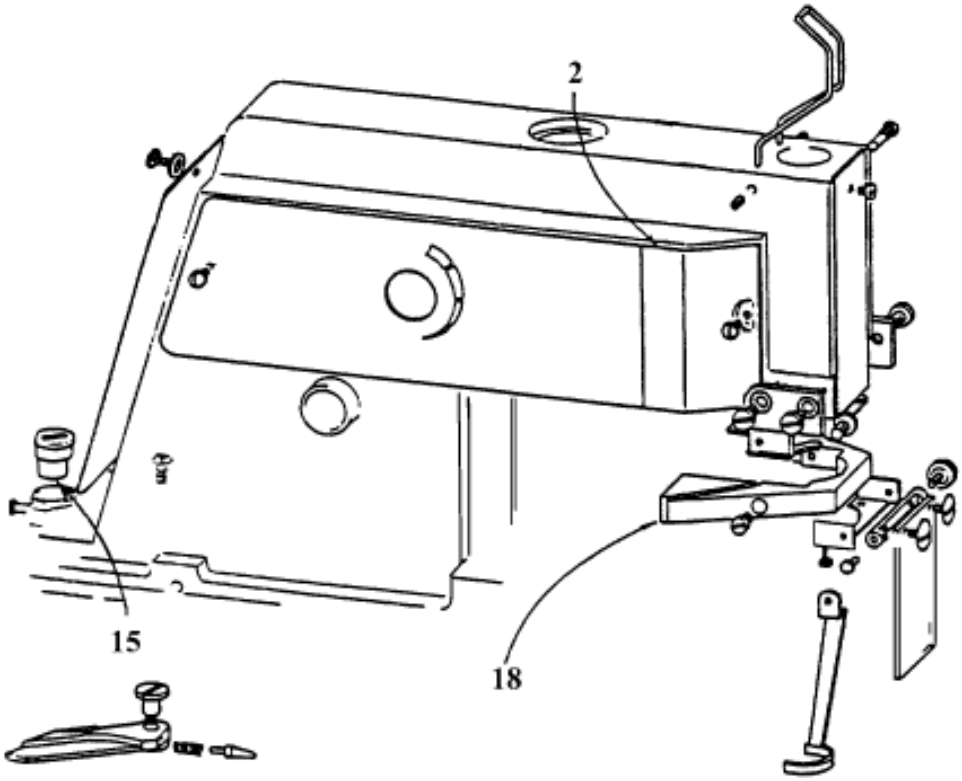

DET	PART NUMBER	DESCRIPTION
02	17.0004.8.569	Cover
15	17.0004.7.158	Bushing
18	17.0004.1.245	Cover

ACCESSORIES - ROUND EYE (SMALL)

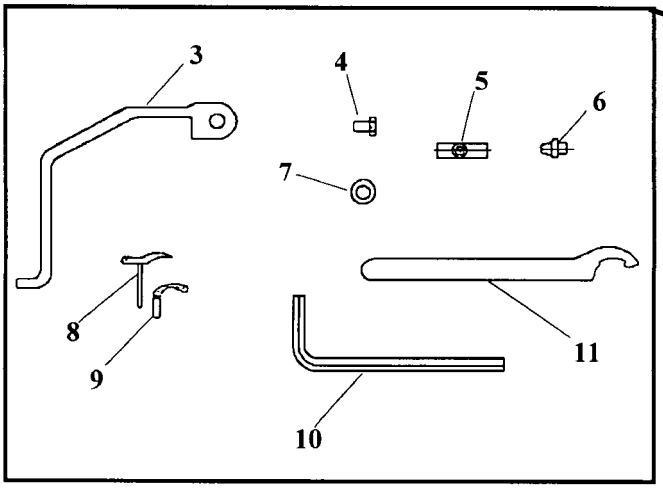

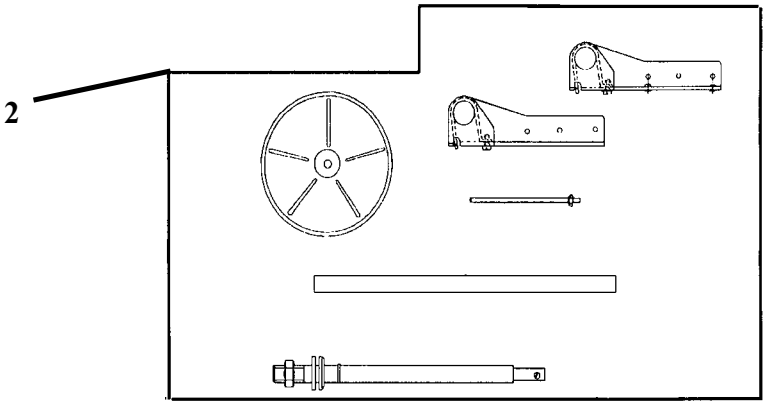

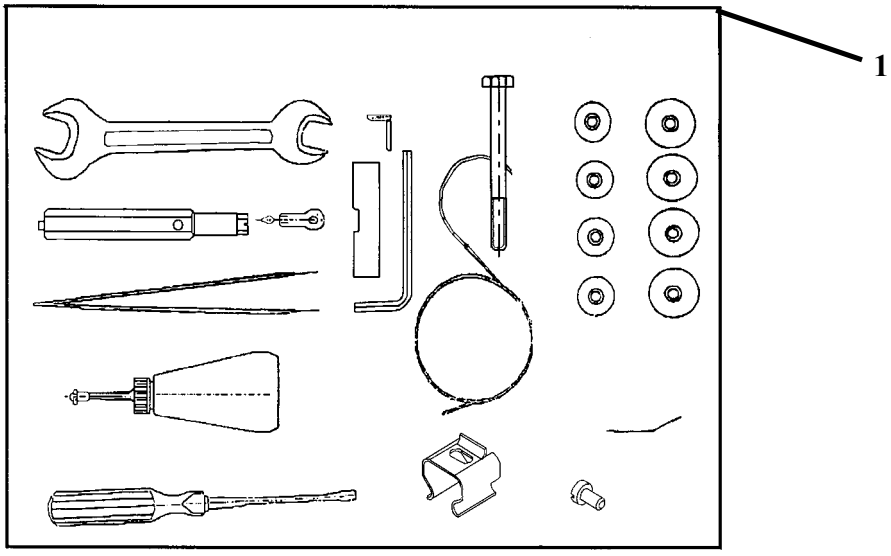

e-mail: service@amfreece.cz; parts@amfreece.cz; website: www.amfreece.com
Phones: +420 582 309 146 (Service), +420 582 309 286 (Spare Parts); Fax: +420 582 360 606

ACCESSORIES - ROUND EYE (SMALL)

DET	PART NUMBER	DESCRIPTION
01	17.0009.4.107	S100 Accessory Kit
02	17.0003.6.156	S100 Thread Stand Asm.
03	17.0027.1.404	Thread Sweeper
04	08.6310.4.006	Screw
05	17.0064.6.401	Cutting Steel - Small Eye (2)
06	17.0042.6.082	Knife 4
	17.0042.6.086	Knife 3.5
	17.0042.6.089	Knife 2.5
	17.0042.6.090	Knife 3
07	08.6850.4.000	Washer
08	17.0004.9.893	L.H. Spreader
09	17.0069.4.047	L.H. Looper
10	12.0008.6.101	Allen Key Wrench 3
11	17.0082.6.348	Wrench (2)
12	17.0009.4.105	S100-052 Accessory Kit

ACCESSORIES - ROUND EYE (LARGE)

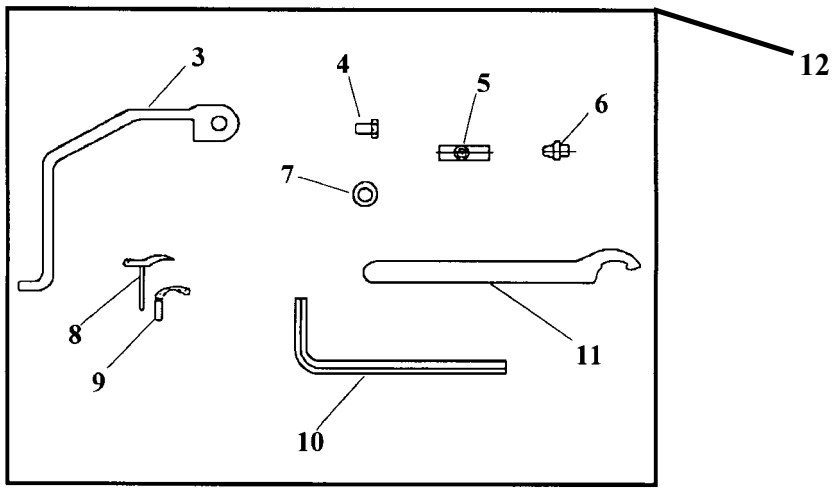

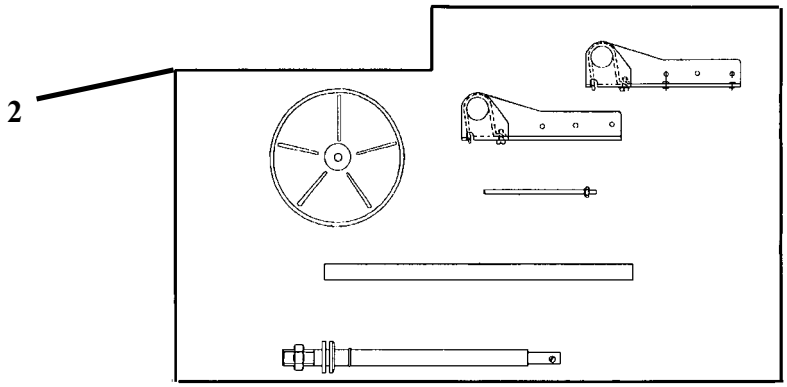

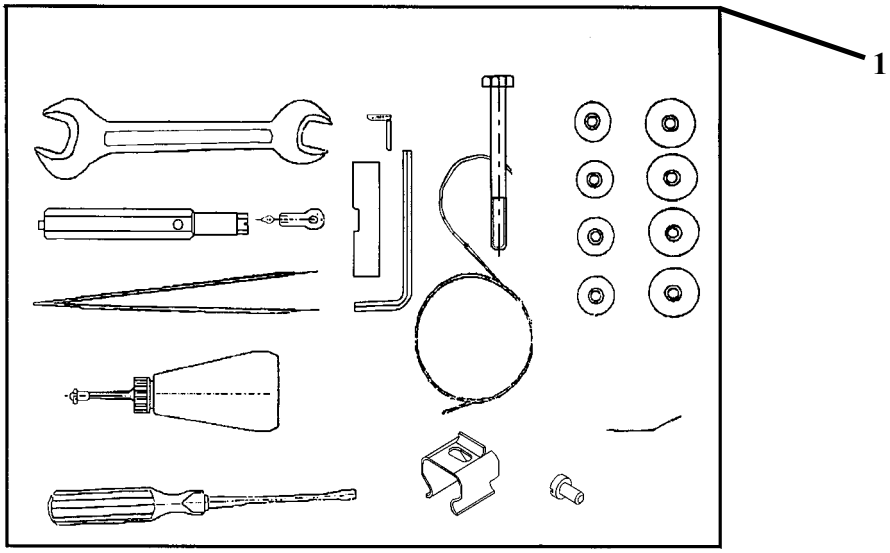

e-mail: service@amfreece.cz; parts@amfreece.cz; website: www.amfreece.com
Phones: +420 582 309 146 (Service), +420 582 309 286 (Spare Parts); Fax: +420 582 360 606

ACCESSORIES - ROUND EYE (LARGE)

DET	PART NUMBER	DESCRIPTION
01	17.0009.4.107	S100 Accessory Kit
02	17.0003.6.156	S100 Thread Stand Asm.
03	17.0027.1.404	Thread Sweeper
04	08.6310.4.006	Screw
05	17.0064.6.401	Cutting Steel - Small Eye (2)
	17.0064.6.402	Cutting Steel - Large Eye (3)
06	17.0042.6.082	Knife 4
	17.0042.6.083	Knife 5
	17.0042.6.084	Knife 6
	17.0042.6.085	Knife 7
	17.0042.6.086	Knife 3.5
07	08.6850.4.000	Washer
08	17.0004.9.893	L.H. Spreader
09	17.0069.4.047	L.H. Looper
10	12.0008.6.101	Allen Key Wrench 3
11	17.0082.6.348	Wrench (2)
12	17.0009.4.106	S100-053 Accessory Kit

THREAD DRAW-OFF - ROUND EYE

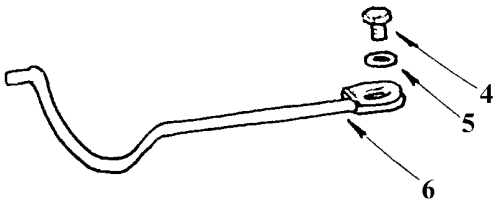

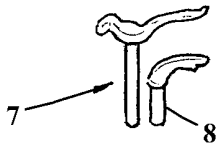

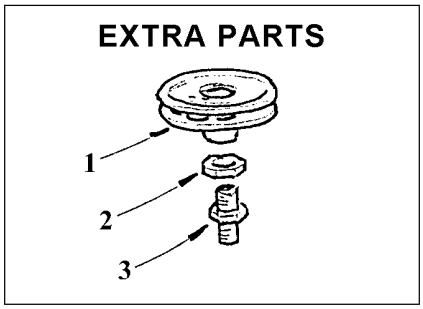

DET	PART NUMBER	DESCRIPTION
01	17.0003.9.047	Thread Draw-off
02	17.0016.1.054	Nut
03	17.0014.6.002	Stud
04	08.6310.4.006	Screw
05	08.6850.4.000	Washer
06	17.0027.1.404	Thread Sweeper
07	17.0004.9.893	L.H. Spreader (for single thread application only)
08	17.0069.4.047	L.H. Looper (for single thread application only)

e-mail: service@amfreece.cz; parts@amfreece.cz; website: www.amfreece.com
Phones: +420 582 309 146 (Service), +420 582 309 286 (Spare Parts); Fax: +420 582 360 606

HEAD, CAM CASE, MAIN STITCH SHAFT, L. H. CRANK - CRB

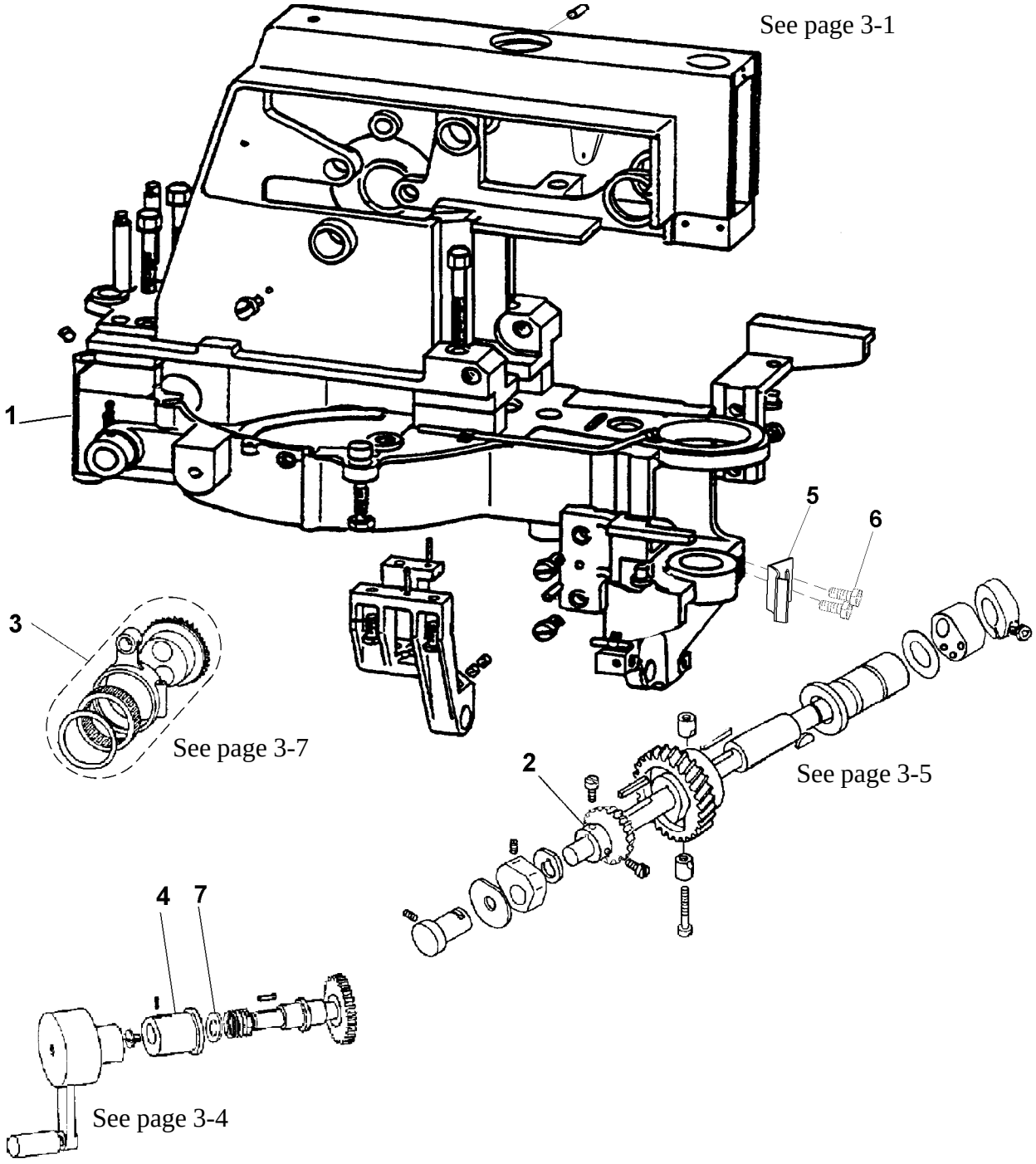

DET	PART NUMBER	DESCRIPTION	DET	PART NUMBER	DESCRIPTION
01	17.0002.0.468	Cam Case	05	17.0028.3.408	Race Stop
02	17.0056.2.062	Gear	06	08.6000.3.008	Screw
03	17.0002.4.406	Rock Link	07	08.6802.0.000	Washer
04	17.0042.5.408	Collar			

BITE ADJUSTMENTS, STITCH SHAFT AND DRIVE - CRB

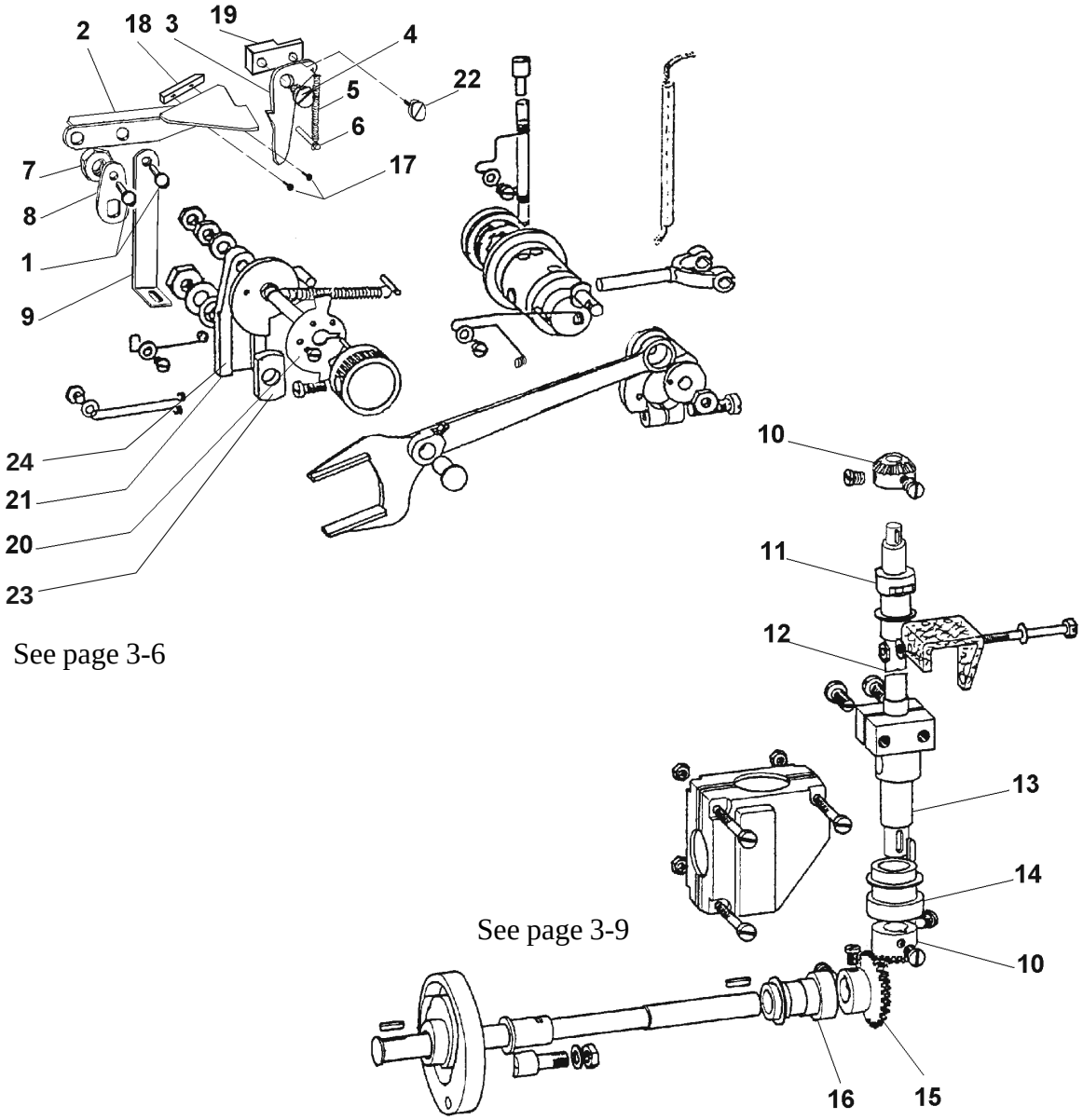

See page 3-6

See page 3-9

DET	PART NUMBER	DESCRIPTION	DET	PART NUMBER	DESCRIPTION
01	17.0032.2.164	Screw	12	17.0034.9.052	Shaft
02	17.0082.9.974	Bracket	13	17.0044.2.236	Shaft Clamp
03	17.0082.4.998	Block	14	17.0042.5.179	Bushing
04	17.0013.1.177	Screw	15	17.0056.2.062	Gear
05	17.0026.3.128	Spring	16	17.0042.5.247	Bushing
06	17.0031.0.201	Pin	17	08.6200.3.006	Screw
07	08.6702.8.000	Nut	18	17.0082.6.430	Block
08	17.0081.0.515	Washer	19	17.0064.6.483	Block
09	17.0082.4.554	Rod	20	17.0081.4.451	Limiter
10	17.0056.2.063	Gear	21	17.0064.1.403	Groove
11	17.0042.5.177	Bearing	22	08.6100.4.010	Screw

e-mail: service@amfreece.cz; parts@amfreece.cz; website: www.amfreece.com
Phones: +420 582 309 146 (Service), +420 582 309 286 (Spare Parts); Fax: +420 582 360 606

STITCH FEED - CRB

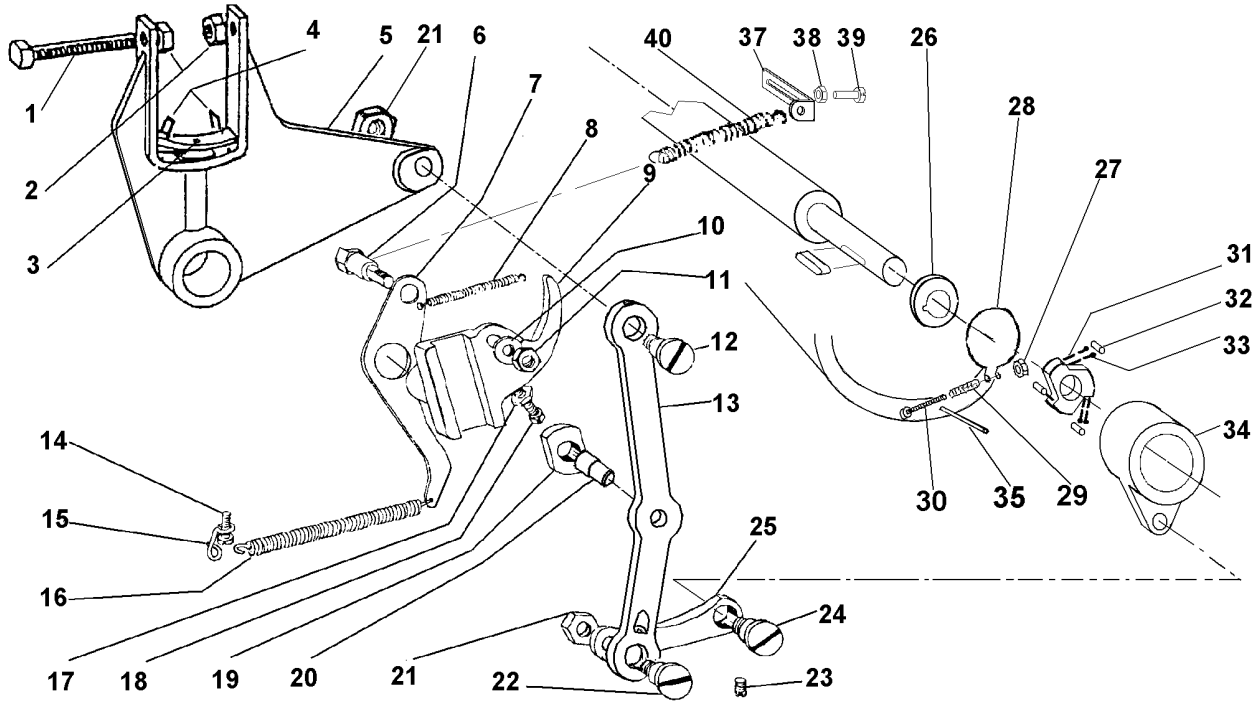

DET	PART NUMBER	DESCRIPTION	DET	PART NUMBER	DESCRIPTION
01	17.0014.4.036	Screw	21	08.6712.8.000	Nut
02	08.6700.6.300	Nut	22	17.0013.1.171	Screw
03	17.0094.5.307	Feld	23	08.6400.4.008	Screw
04	17.0027.1.410	Clamps	24	17.0013.1.483	Screw
05	17.0063.6.444	Stitch feed	25	17.0062.2.650	Link
06	17.0014.3.403	Screw	26	17.0019.5.050	Washer
07	17.0063.6.448	Lever	27	08.6700.4.000	Nut
08	17.0026.3.130	Spring	28	18.0027.1.344	Brake
09	17.0064.1.402	Lever	29	12.3010.0.009	Spring
10	08.6802.6.000	Washer	30	08.6000.4.025	Screw
11	08.6702.6.000	Nut	31	17.0026.0.213	Spring
12	17.0013.1.171	Screw	32	12.2099.1.006	Roller Bearing
13	17.0062.3.400	Link	33	17.0032.0.113	Pin
14	08.6000.5.008	Screw	34	17.0064.3.025	Lever Guide
15	17.0027.1.255	Spring holder	35	12.1010.0.220	Pin
16	17.0026.3.014	Spring	36	17.0045.9.055	Bearing House
17	08.6710.5.000	Nut	37	17.0082.1.029	Holder
18	17.0014.4.011	Screw	38	08.6850.4.000	Nut
19	17.0045.1.062	Block	39	08.6000.4.012	Screw
20	17.0031.3.212	Shaft	40	17.0026.3.168	Spring

MAIN CAM, SECTOR SHAFT - CRB

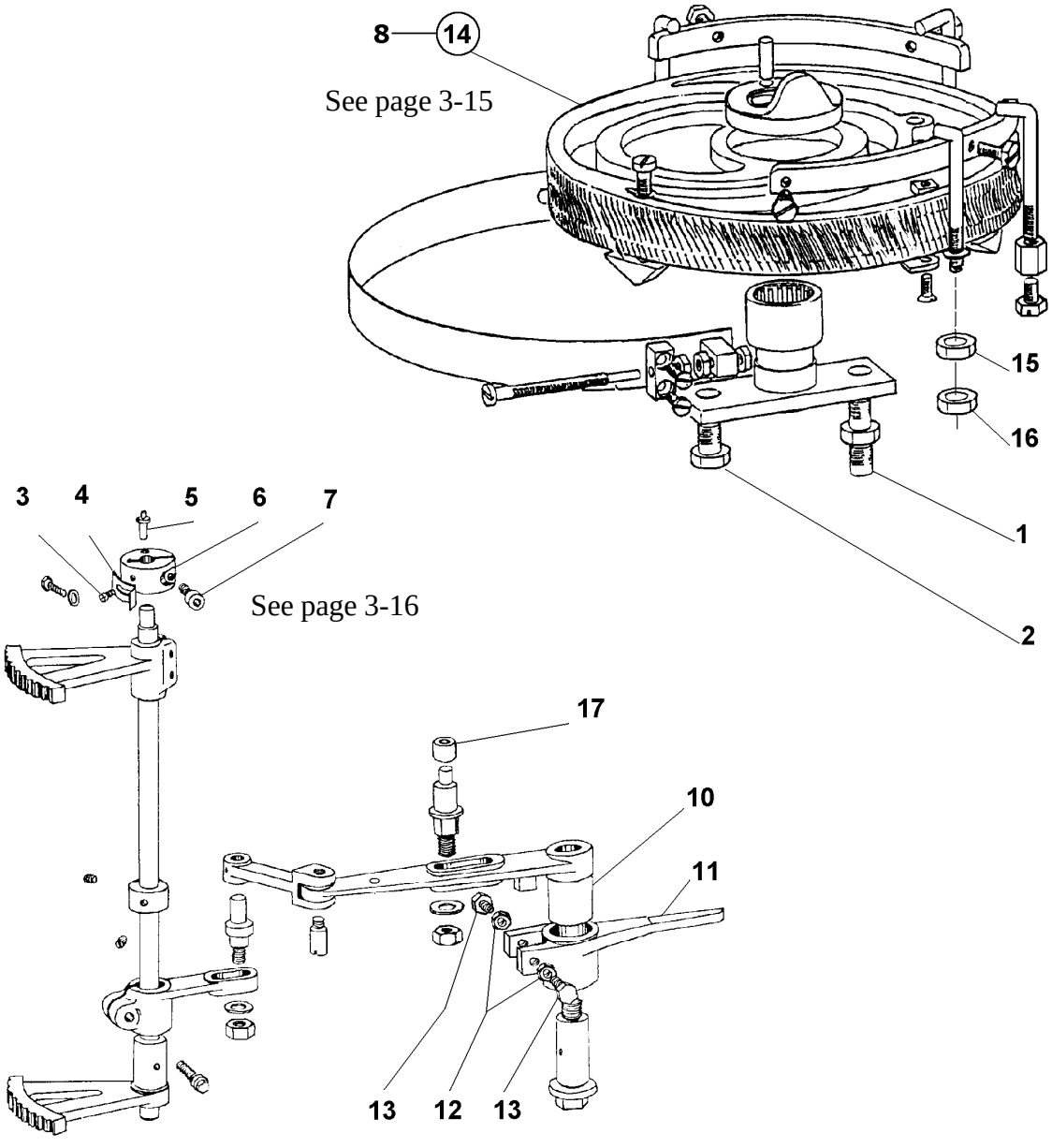

DET	PART NUMBER	DESCRIPTION	DET	PART NUMBER	DESCRIPTION
01	17.0033.3.051	Screw	10	17.0063.6.450	Link
02	17.0014.1.285	Screw	11	17.0061.2.424	Lever
03	08.6010.4.006	Screw	12	17.0016.1.094	Nut
04	17.0082.4.997	Converter	13	17.0014.1.068	Screw
05	17.0032.3.094	Pin	14	17.0067.4.400	Main Cam
06	17.0062.7.048	Ring	15	17.0016.1.094	Nut
07	08.6000.6.016	Screw	16	17.0016.1.100	Nut
08	17.0002.7.597	Main Cam Assembly	17	17.0041.8.067	Roll
09					

CUTTING LEVER, LATERAL CAM - CRB

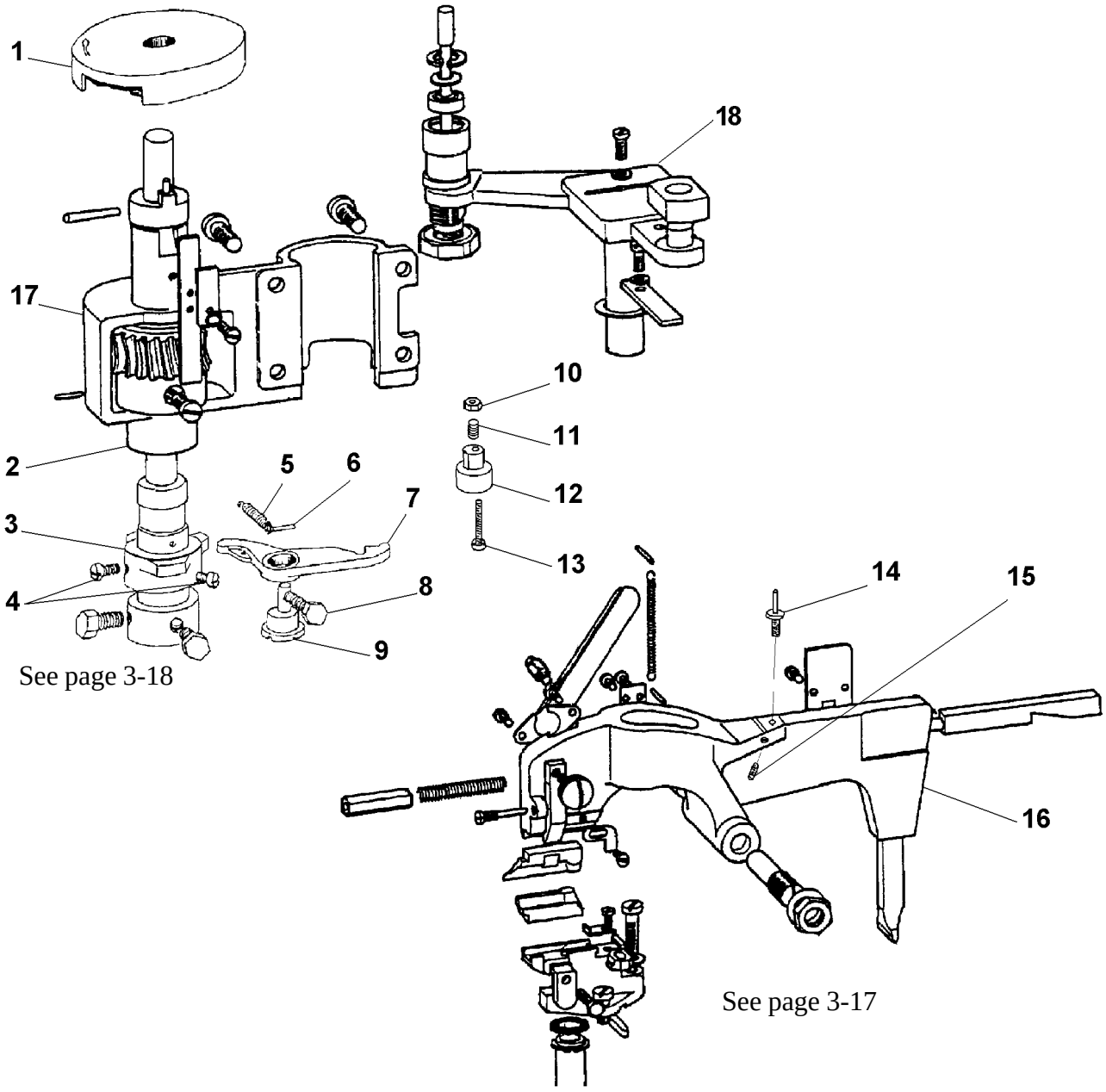

See page 3-18

See page 3-17

DET	PART NUMBER	DESCRIPTION	DET	PART NUMBER	DESCRIPTION
01	17.0067.4.404	Lateral cam	10	08.6700.5.000	Nut
02	17.0034.2.147	Shaft	11	07.6440.0.040	Spring
03	17.0067.2.413	Cam	12	17.0044.1.620	Exc.Stud
04	17.0013.2.120	Screw	13	08.6000.5.040	Screw
05	17.0026.3.245	Spring	14	17.0014.2.004	Screw
06	17.0031.0.200	Pin	15	08.6400.4.010	Screw
07	17.0063.6.172	Link	16	17.0063.5.411	Cutting Lever
08	17.0014.1.069	Screw	17	17.0074.4.534	Housing
09	17.0033.8.090	Stud	18	17.0004.4.326	Lever

CAM, TRANSVERSE MOTION - CRB

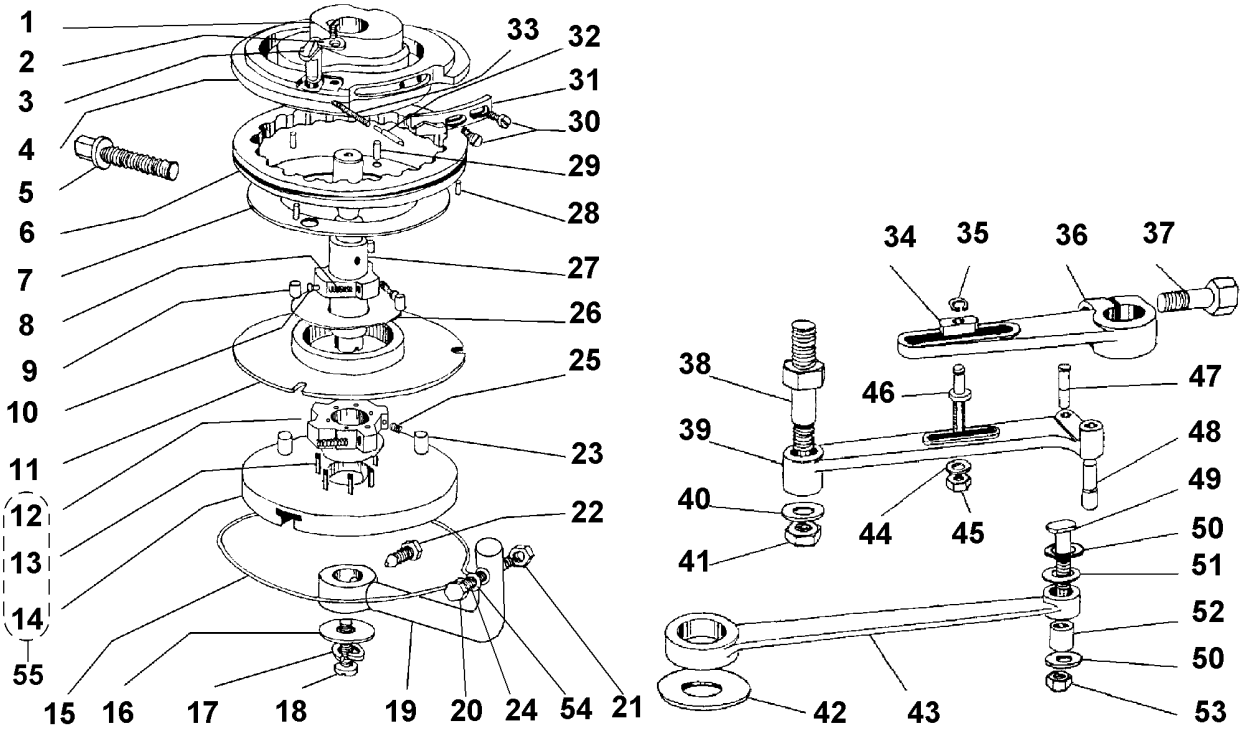

DET	PART NUMBER	DESCRIPTION	DET	PART NUMBER	DESCRIPTION
01	17.0012.6.067	Screw	29	12.1014.0.308	Pin
02	17.0082.4.811	Stop	30	17.0012.0.121	Screw
03	17.0062.5.075	Click	31	17.0062.5.411	Block
04	17.0067.4.092	Cam	32	17.0031.3.213	Pin
05	17.0014.2.005	Screw	33	17.0026.0.219	Spring
06	17.0044.2.642	Ring toothing	34	17.0045.1.064	Block
07	17.0019.0.234	Ring washer	35	17.0027.4.090	Washer
08	17.0026.0.346	Spring	36	17.0061.3.609	Lever
09	17.0031.4.089	Roller	37	17.0014.1.205	Screw
10	17.0032.0.113	Stud	38	17.0033.3.051	Stud
11	17.0044.2.327	Ring Plate	39	17.0061.2.177	Lever
12	17.0045.9.400	Bearing Housing	40	17.0019.0.233	Washer
13	12.1014.0.006	Pin	41	08.6700.8.000	Nut
14	17.0044.2.226	Ring	42	17.0019.0.235	Washer
15	17.0027.1.614	Brake	43	17.0063.1.004	Lever
16	17.0019.0.232	Washer	44	17.0019.0.346	Washer
17	08.6800.6.000	Washer	45	08.6700.6.000	Nut
18	08.6000.6.012	Screw	46	17.0033.3.052	Stud
19	17.0064.5.953	Lever	47	17.0032.2.162	Pin
20	08.6000.4.025	Screw	48	17.0031.3.214	Stud
21	08.6700.4.000	Nut	49	17.0013.1.175	Screw
22	17.0014.1.070	Screw	50	17.0019.0.230	Washer
23	12.2099.1.010	Roller	51	17.0019.0.239	Washer
24	12.3010.0.009	Spring	52	17.0041.0.233	Roll
25	12.3010.0.012	Spring	53	08.6700.6.000	Nut
26	17.0019.0.294	Washer	54	08.6817.4.000	Washer
27	17.0033.3.098	Shaft	55	17.0004.6.946	Star Assy
28	17.0031.4.083	Pin			

e-mail: service@amfreece.cz; parts@amfreece.cz; website: www.amfreece.com
Phones: +420 582 309 146 (Service), +420 582 309 286 (Spare Parts); Fax: +420 582 360 606

TRIP LEVER ASSEMBLY - CRB

See page 3-25

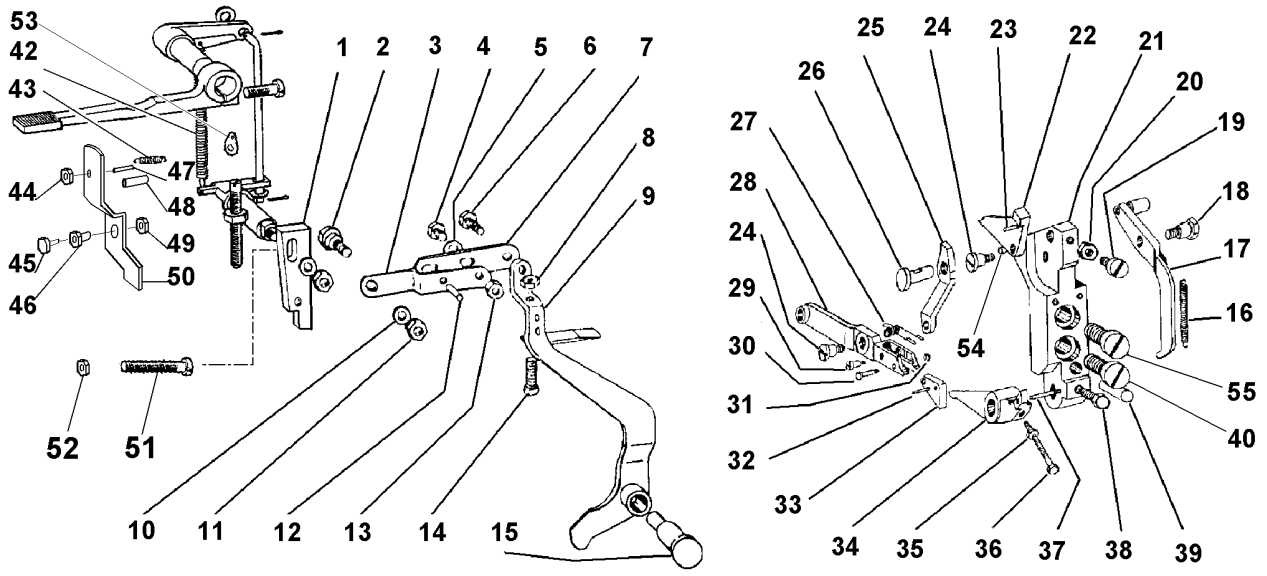

DET	PART NUMBER	DESCRIPTION	DET	PART NUMBER	DESCRIPTION
01	17.0064.5.958	Lever	29	17.0013.1.179	Screw
02	17.0014.3.015	Screv	30	17.0032.0.114	Pin
03	17.0082.2.280	Link	31	17.0027.4.100	Washer
04	08.6000.4.012	Screv	32	12.1010.0.210	Pin
05	08.6850.4.000	Washer	33	17.0082.4.561	Block
06	17.0014.3.014	Screw	34	17.0063.6.232	Lever
07	17.0081.0.261	Link	35	08.6710.4.000	Nut
08	08.6700.5.000	Nut	36	08.6310.4.025	Screw
09	17.0005.0.010	Lever	37	17.0031.0.200	Pin
10	17.0019.0.346	Washer	38	08.6010.5.016	Screw
11	08.6700.5.000	Nut	39	12.1010.0.320	Pin
12	12.1010.0.306	Pin	40	08.6000.8.020	Screw
13	08.6700.4.000	Nut	41	17.0031.3.403	Pin
14	17.0033.1.403	Screw	42	17.0026.3.014	Spring
15	17.0032.2.182	Stud	43	17.0026.3.244	Spring
16	17.0026.3.127	Spring	44	08.6700.4.000	Nut
17	17.0004.7.078	Lever	45	08.6000.6.012	Screw
18	17.0014.3.013	Screv	46	17.0044.1.211	Roll
19	08.6000.5.012	Screv	47	08.6010.3.012	Screw
20	08.6710.5.000	Nut	48	08.6400.4.020	Screw
21	17.0064.5.921	Block	49	17.0019.0.230	Washer
22	17.0062.5.412	Block	50	17.0083.4.017	Lever
23	17.0031.0.438	Pin	51	08.6310.4.030	Screw
24	17.0013.1.174	Screw	52	08.6700.4.000	Nut
25	17.0061.6.015	Link	53	17.0082.6.433	Holder
26	17.0032.8.073	Stud	54	17.0031.3.403	Stud
27	17.0026.4.190	Spring	55	17.0012.2.403	Screw
28	17.0063.3.109	Link	56		

FORK LEVER, TRIMMER ACTUATOR, THREAD RETAINER - CRB

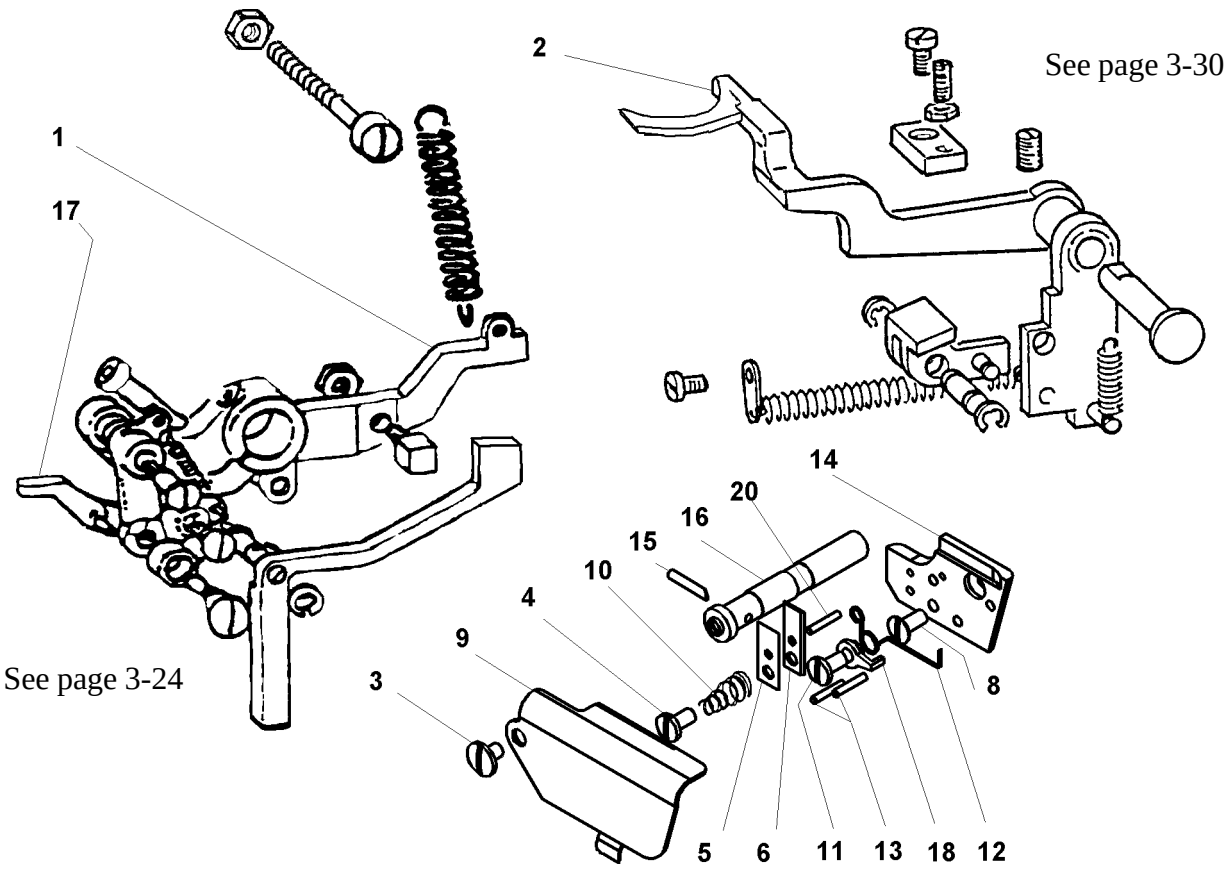

DET	PART NUMBER	DESCRIPTION	DET	PART NUMBER	DESCRIPTION
01	17.0063.5.402	Lever	11	08.6010.4.012	Screw
02	17.0004.4.987	Lever	12	17.0026.4.035	Spring
03	17.0012.1.137	Screw	13	12.1010.0.310	Pin
04	17.0013.1.259	Screw	14	17.0081.4.450	Plate
05	17.0082.4.563	Block	15	17.0031.0.397	Pin
06	17.0081.5.081	Block	16	17.0033.5.118	Shaft
07	12.1010.0.210	Pin	17	17.0063.6.169	Lever
08	08.6100.4.010	Screw	18	17.0064.7.162	Actuator
09	17.0004.7.079	Cover			
10	17.0026.2.020	Spring	20	12.1010.0.210	Pin

e-mail: service@amfreece.cz; parts@amfreece.cz; website: www.amfreece.com
Phones: +420 582 309 146 (Service), +420 582 309 286 (Spare Parts); Fax: +420 582 360 606

BEDPLATE ASSEMBLY - CRB

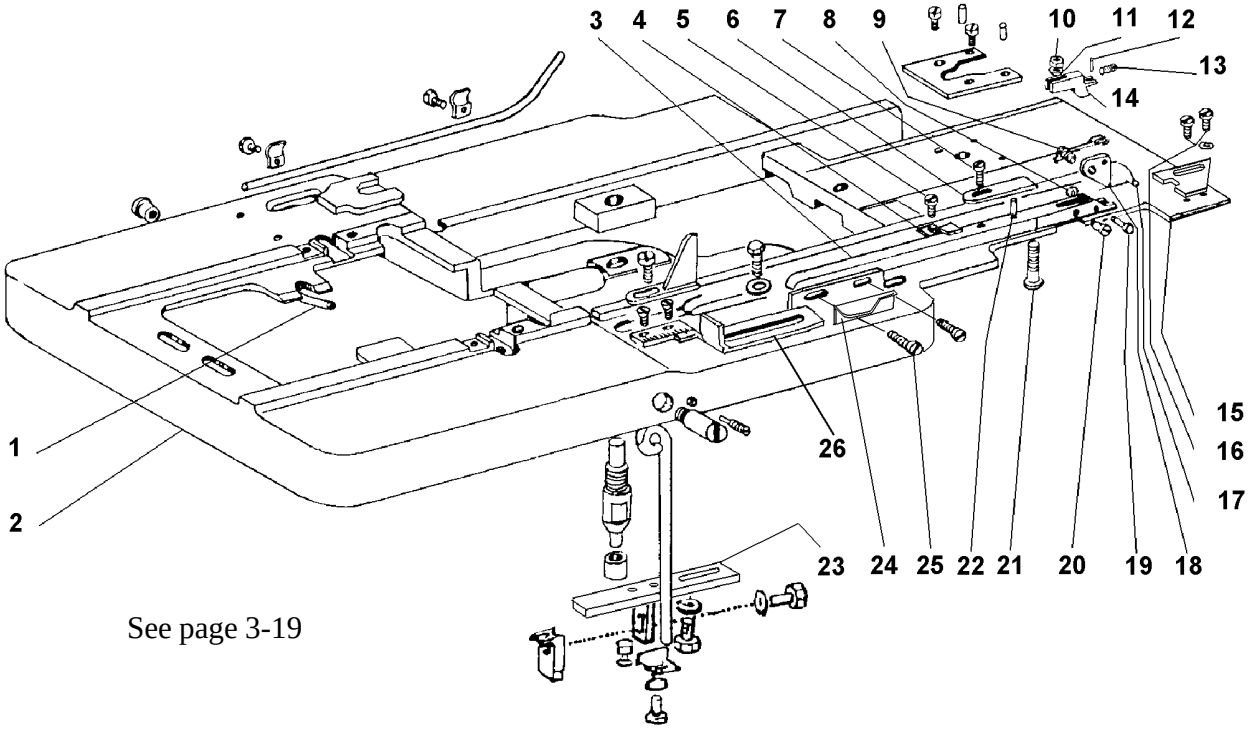

See page 3-19

DET	PART NUMBER	DESCRIPTION	DET	PART NUMBER	DESCRIPTION
01	17.0084.1.570	Tubing	14	17.0064.5.970	Block
02	17.0071.4.202	Bedplate	15	17.0064.5.959	Block
03	17.0064.5.960	Link	16	08.6000.5.010	Screw
04	17.0082.3.431	Bracket	17	12.1010.0.210	Pin
05	08.6100.5.010	Screw	18	17.0082.4.558	Block
06	17.0064.5.186	Block	19	17.0032.0.114	Stud
07	17.0012.0.290	Screw	20	17.0013.1.179	Screw
08	17.0027.4.100	Washer	21	17.0012.0.127	Screw
09	17.0026.4.190	Spring	22	12.1010.0.308	Pin
10	08.6702.6.000	Nut	23	17.0064.6.327	Thread Cutter Adjusting Base
11	08.6802.6.000	Washer	24	17.0083.4.018	Block
12	12.1010.0.306	Pin	25	08.6000.4.016	Screw
13	08.6400.5.016	Screw	26	17.0004.9.579	Block Assembly

ACCESSORIES - CRB

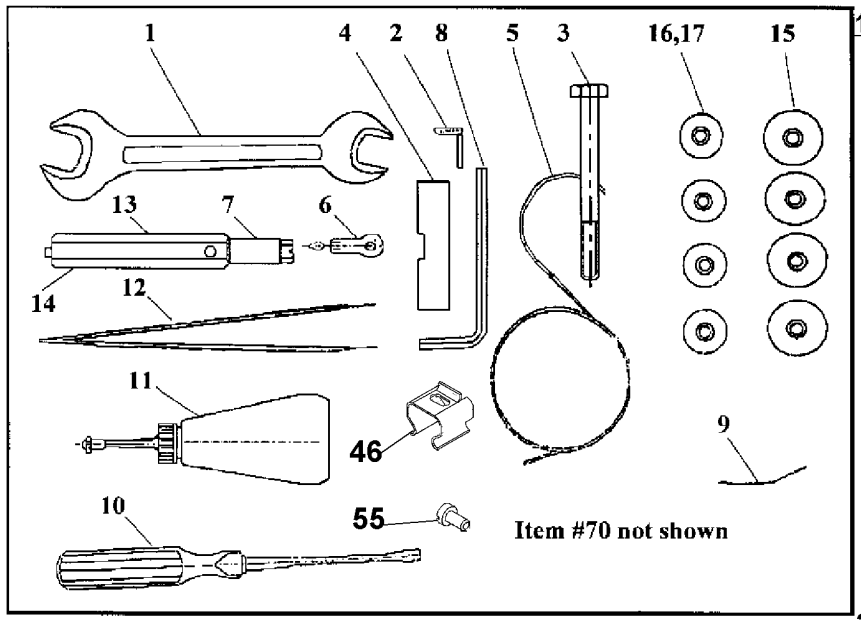

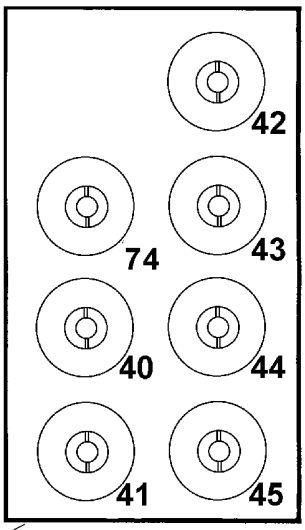

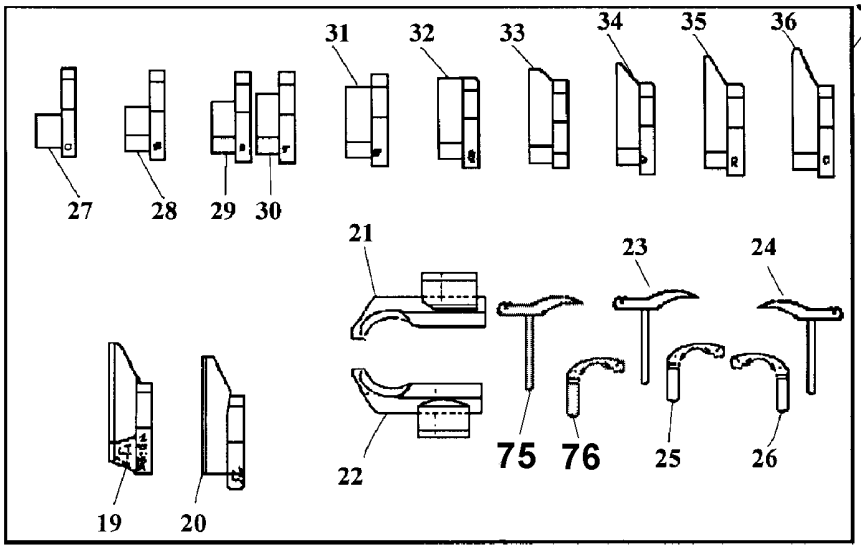

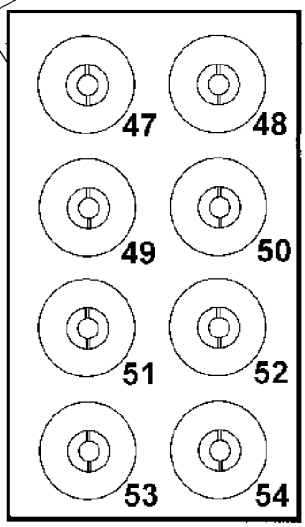

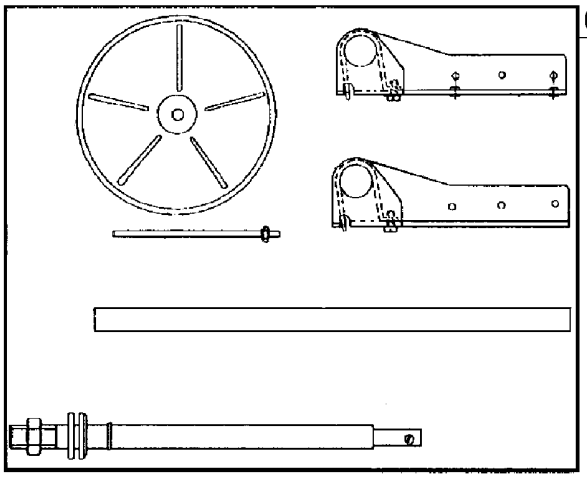

e-mail: service@amfreece.cz; parts@amfreece.cz; website: www.amfreece.com
Phones: +420 582 309 146 (Service), +420 582 309 286 (Spare Parts); Fax: +420 582 360 606

ACCESSORIES - CRB

DET	PART NUMBER	DESCRIPTION	DET	PART NUMBER	DESCRIPTION
01	12.0008.6.107	Wrench	38		
01	12.0008.6.109	Wrench	39		
01	12.0008.6.111	Wrench	40	17.0067.4.133	Lateral Cam (0 x 10)
02	17.0064.7.275	Throat Plate	41	17.0067.4.135	Lateral Cam (0 x 13)
03	08.6300.8.065	Hex Head Bolt	42	17.0067.4.137	Lateral Cam (0 x 16)
04	17.0082.6.242	Gauge	43	17.0067.4.139	Lateral Cam (0 x 19)
05	17.0027.1.223	Thread Wire	44	17.0067.4.141	Lateral Cam (0 x 22)
06	12.0008.6.200	Needle Threader	45	17.0067.4.143	Lateral Cam (0 x 26)
07	17.0016.3.105	Pin Remover	46	17.0028.3.117	Clip
08	12.0008.6.103	Allen Key Wrench	47	17.0067.4.144	Lateral Cam (0 x 29)
08	12.0008.6.112	Allen Key Wrench	48	17.0067.4.155	Lateral Cam (3/5 x 19)
09	17.0083.3.186	Oil Reservoir	49	17.0067.4.151	Lateral Cam (3/5 x 13)
10	17.0003.8.034	Screwdriver	50	17.0067.4.153	Lateral Cam (3/5 x 16)
10	17.0003.8.035	Screwdriver	51	17.0067.4.157	Lateral Cam (3/5 x 22)
11	05.1322.0.000	Can of Oil	52	17.0067.4.159	Lateral Cam (3/5 x 26)
12	12.0008.6.215	Tweezers	53	17.0067.4.160	Lateral Cam (3/5 x 29)
13	17.0084.1.564	Socket Wrench	54	17.0067.4.161	Lateral Cam (3/5 x 32)
14	17.0038.4.056	Pin	55	08.6010.3.006	Screw
15	17.0095.1.273	Rubber	56		
16	17.0095.1.274	Rubber	57		
17	17.0019.0.441	Washer	58		
18	17.0009.4.107	S100 Accessory Kit	59		
19	18.0087.0.406	3/5 CB Eye Knife	60		
20	17.0064.5.863	No Eye Knife	61		
21	17.0066.7.178	R.H. Clamp Foot-Jeans	62		
22	17.0066.7.177	L.H. Clamp Foot-Jeans	63		
23	17.0004.9.895	Forked Spreader	64		
24	17.0004.9.894	R.H. Spreader	65		
25	17.0069.4.049	Eye Looper	66		
26	17.0069.4.048	Blind Looper	67		
27	19.0064.5.846	10mm Cutting Steel	68		
28	19.0064.5.951	13mm Cutting Steel	69	17.0003.6.156	S100 Thread Stand Asm.
29	19.0064.5.849	16mm Cutting Steel	70	02.0501.0.111	Needle (5)
30	19.0064.5.952	19mm Cutting Steel	71		
31	19.0064.5.852	22mm Cutting Steel	72		
32	19.0064.5.854	26mm Cutting Steel	73		
33	19.0064.5.855	29mm Cutting Steel	74	17.0067.4.405	Lateral Cam CRB (0)
34	19.0064.5.856	32mm Cutting Steel	75	17.0004.9.893	Spreader (1 thread)
35	19.0064.5.857	35mm Cutting Steel	76	17.0069.4.047	Looper (1 thread)
36	19.0064.5.858	38mm Cutting Steel	77		
37	17.2044.0.060	S100-060 Accessory Kit			

RACE - CRB

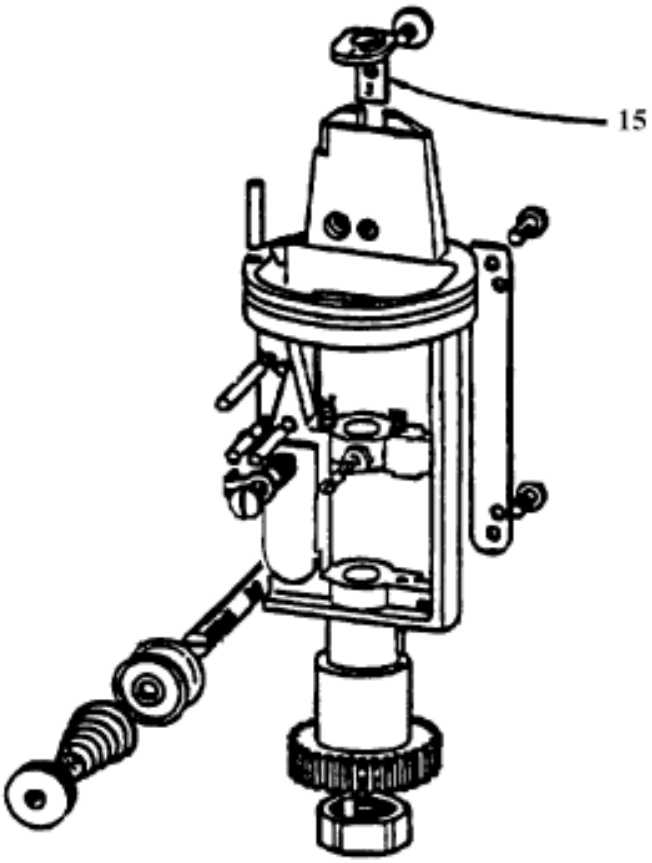

DET	PART NUMBER	DESCRIPTION
15	17.0064.7.113	Throat Plate

e-mail: service@amfreece.cz; parts@amfreece.cz; website: www.amfreece.com
Phones: +420 582 309 146 (Service), +420 582 309 286 (Spare Parts); Fax: +420 582 360 606

SPECIAL ACCESSORIES

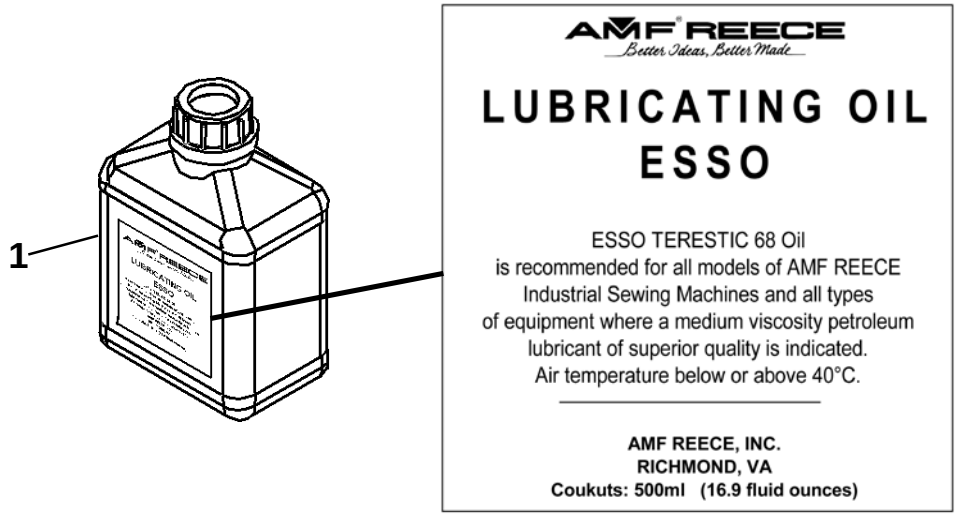

DET	PART NUMBER	DESCRIPTION
01	05.0090.1.000	Oil Can - 68

RECOMMENDED SPARE PARTS

No.	Part Number	Parts Description
01	01.5062.0.000	SPRING WASHER
02	17.0004.9.894	RIGHT SPREADER
03	17.0004.9.895	FORKED SPREADER
04	17.0012.0.570	NEEDLE SCREW
05	17.0013.1.420	SCREW
06	17.0026.2.077	TENSION SPRING
07	17.0026.2.078	TENSION SPRING
08	17.0026.4.292	SPRING
09	17.0026.4.293	SPRING
10	17.0033.8.088	RIGHT SPREADER STOP
11	17.0033.8.089	LEFT SPREADER STOP
12	17.0064.5.849	CUTTING STEEL
13	17.0064.5.952	CUTTING STEEL #19MM
14	17.0081.8.547	SPREADER WEDGE
15	17.0082.8.017	TENSION DISK
16	17.0087.0.204	KNIFE*TRIMMER
17	18.0087.0.405	CA EYE KNIFE*XL-21
18	18.0087.0.406	CB EYE KNIFE*XL-21
19	17.0069.4.048	BLIND LOOPER*RH
20	17.0069.4.049	EYE LOOPER*LH
21	All types of needle	NEEDLES

e-mail: service@amfreece.cz; parts@amfreece.cz; website: www.amfreece.com
Phones: +420 582 309 146 (Service), +420 582 309 286 (Spare Parts); Fax: +420 582 360 606

PART NUMBER	PAGE	DET
01.5011.0.000		
01.5011.0.000	3-26	11
01.5055.0.000	3-23	25
01.5450.0.000	3-31	07
01.7667.0.000	3-31	22
02.0501.0.011		
02.0501.0.011	3-8	19
02.0501.0.111	3-33	70
02.0501.0.111	3-67	70
02.0503.3.113	3-8	
05.0090.1.000		
05.0090.1.000	3-69	1
05.1322.0.000	3-33	11
05.1322.0.000	3-67	11
07.6440.0.040	3-61	11
08.6000.3.008		
08.6000.3.008	3-57	06
08.6000.4.006	3-29	19
08.6000.4.008	3-23	22
08.6000.4.008	3-29	31
08.6000.4.010	3-6	22
08.6000.4.010	3-40	22
08.6000.4.012	3-15	18
08.6000.4.012	3-19	26
08.6000.4.012	3-27	20
08.6000.4.012	3-27	43
08.6000.4.012	3-29	14
08.6000.4.012	3-59	39
08.6000.4.012	3-63	04
08.6000.4.016	3-65	25
08.6000.4.020	3-40	44
08.6000.4.025	3-14	20
08.6000.4.025	3-20	03
08.6000.4.025	3-59	30
08.6000.4.025	3-62	20
08.6000.4.045	3-9	25
08.6000.5.008	3-59	14
08.6000.5.010	3-15	04
08.6000.5.010	3-19	06
08.6000.5.010	3-27	22
08.6000.5.010	3-29	09
08.6000.5.010	3-65	16
08.6000.5.012	3-5	19
08.6000.5.012	3-15	14
08.6000.5.012	3-19	34
08.6000.5.012	3-23	17
08.6000.5.012	3-63	19
08.6000.5.040	3-61	13
08.6000.6.012	3-62	18
08.6000.6.012	3-63	45
08.6000.6.016	3-1	15
08.6000.6.016	3-18	12
08.6000.6.016	3-21	28
08.6000.6.016	3-60	07
08.6000.6.020	3-26	10
08.6000.8.020	3-63	40
08.6000.8.050	3-16	21
08.6010.3.006		
08.6010.3.006	3-1	10
08.6010.3.006	3-1	25
08.6010.3.006	3-3	09
08.6010.3.006	3-11	20
08.6010.3.006	3-19	03
08.6010.3.006	3-28	10
08.6010.3.006	3-29	21
08.6010.3.006	3-33	55
08.6010.3.006	3-67	55
08.6010.3.012	3-22	23
08.6010.3.012	3-63	47
08.6010.4.006	3-30	07
08.6010.4.006	3-60	03
08.6010.4.008	3-8	33
08.6010.4.008	3-13	16
08.6010.4.008	3-30	02
08.6010.4.008	3-31	05
08.6010.4.010	3-10	21
08.6010.4.010	3-18	17
08.6010.4.012	3-10	04
08.6010.4.012	3-12	06
08.6010.4.012	3-28	21
08.6010.4.012	3-31	16
08.6010.4.012	3-64	11
08.6010.5.012	3-4	11
08.6010.5.012	3-17	26
08.6010.5.016	3-63	38
08.6100.4.010		
08.6100.4.010	3-15	08
08.6100.4.010	3-58	22
08.6100.4.010	3-64	08
08.6100.5.010	3-65	05
08.6100.6.050	3-31	13
08.6200.3.006		
08.6200.3.006	3-58	17
08.6200.4.006	3-3	11
08.6200.4.006	3-3	43
08.6200.4.006	3-29	03
08.6200.4.025	3-24	21
08.6300.8.016		
08.6300.8.016	3-15	23
08.6300.8.065	3-3	02
08.6300.8.065	3-33	03
08.6300.8.065	3-67	03
08.6310.4.006	3-6	17
08.6310.4.006	3-53	04
08.6310.4.006	3-55	04
08.6310.4.006	3-56	04
08.6310.4.025	3-63	36
08.6310.4.030	3-63	51
08.6310.5.008	3-19	35
08.6310.5.008	3-48	08
08.6310.6.010	3-3	23
08.6310.6.016	3-3	24
08.6310.6.016	3-19	08
08.6310.6.016	3-22	15
08.6400.3.005		
08.6400.3.005	3-8	31
08.6400.3.008	3-29	04
08.6400.4.005	3-20	40
08.6400.4.005	3-49	19
08.6400.4.006	3-26	26
08.6400.4.008	3-27	04
08.6400.4.008	3-59	23
08.6400.4.010	3-61	15
08.6400.4.020	3-63	48
08.6400.5.016	3-65	13
08.6400.5.305	3-8	14
08.6400.5.305	3-16	05
08.6400.6.006	3-49	04
08.6700.4.000		

INDEX

PART NUMBER	PAGE	DET
08.6700.4.000	3-49	14
08.6700.4.000	3-59	27
08.6700.4.000	3-62	21
08.6700.4.000	3-63	13
08.6700.4.000	3-63	44
08.6700.4.000	3-63	52
08.6700.5.000	3-49	31
08.6700.5.000	3-61	10
08.6700.5.000	3-63	08
08.6700.5.000	3-63	11
08.6700.6.000	3-6	04
08.6700.6.000	3-23	03
08.6700.6.000	3-62	45
08.6700.6.000	3-62	53
08.6700.6.300	3-6	35
08.6700.6.300	3-13	02
08.6700.6.300	3-21	18
08.6700.6.300	3-22	06
08.6700.6.300	3-59	02
08.6700.8.000	3-62	41
08.6702.6.000	3-59	11
08.6702.6.000	3-65	10
08.6702.8.000	3-58	07
08.6710.3.000	3-11	32
08.6710.4.000	3-9	05
08.6710.4.000	3-11	30
08.6710.4.000	3-12	25
08.6710.4.000	3-21	25
08.6710.4.000	3-22	20
08.6710.4.000	3-27	47
08.6710.4.000	3-30	04
08.6710.4.000	3-63	35
08.6710.5.000	3-59	17
08.6710.5.000	3-63	20
08.6710.8.400	3-28	23
08.6712.8.000	3-59	21
08.6800.6.000		
08.6800.6.000	3-62	17
08.6802.0.000	3-57	07
08.6802.6.000	3-59	10
08.6802.6.000	3-65	11
08.6817.4.000	3-62	54
08.6850.4.000	3-3	41
08.6850.4.000	3-3	46
08.6850.4.000	3-4	25
08.6850.4.000	3-6	13
08.6850.4.000	3-9	24
08.6850.4.000	3-11	29
08.6850.4.000	3-18	18
08.6850.4.000	3-19	32
08.6850.4.000	3-23	27
08.6850.4.000	3-25	09
08.6850.4.000	3-29	32
08.6850.4.000	3-53	07
08.6850.4.000	3-55	07
08.6850.4.000	3-56	05
08.6850.4.000	3-59	38
08.6850.4.000	3-63	05
08.6850.5.000	3-9	11
08.6850.5.000	3-10	07
08.6850.5.000	3-19	13
08.6850.5.000	3-28	09
08.6852.4.000	3-49	09
10.1004.0.000		
10.1004.0.000	3-8	34
10.1021.2.000	3-8	15
10.1090.0.000	3-31	06
10.2552.2.004	3-49	22
10.2552.2.006	3-49	22
10.2559.1.104	3-49	20
10.2559.1.106	3-49	20
10.2566.0.000	3-49	07
10.2567.0.000	3-49	05
11.1011.0.000		
11.1011.0.000	3-8	35
11.1150.0.003	3-25	04
11.3016.0.000	3-16	23
11.3027.0.003	3-15	24
12.0008.6.101		
12.0008.6.101	3-53	10
12.0008.6.101	3-55	10
12.0008.6.103	3-33	08
12.0008.6.103	3-67	08
12.0008.6.107	3-33	01
12.0008.6.107	3-67	01
12.0008.6.109	3-33	01
12.0008.6.109	3-67	01
12.0008.6.111	3-33	01
12.0008.6.111	3-67	01
12.0008.6.112	3-33	08
12.0008.6.112	3-67	08
12.0008.6.200	3-33	06
12.0008.6.200	3-67	06
12.0008.6.215	3-33	12
12.0008.6.215	3-67	12
12.1010.0.210		
12.1010.0.210	3-63	32
12.1010.0.210	3-64	07
12.1010.0.210	3-64	20
12.1010.0.210	3-65	17
12.1010.0.220	3-59	35
12.1010.0.306	3-63	12
12.1010.0.306	3-65	12
12.1010.0.308	3-65	22
12.1010.0.310	3-64	13
12.1010.0.320	3-63	39
12.1010.0.516	3-15	07
12.1014.0.004	3-31	08
12.1014.0.006	3-62	13
12.1014.0.308	3-62	29
12.2010.0.002		
12.2010.0.002	3-18	16
12.2010.1.001	3-8	05
12.2050.0.000	3-7	17
12.2050.1.001	3-5	21
12.2050.1.002	3-15	05
12.2099.1.006	3-43	38
12.2099.1.006	3-59	32
12.2099.1.007	3-14	27
12.2099.1.010	3-62	23
12.3010.0.009	3-59	29
12.3010.0.009	3-62	24
12.3010.0.012	3-62	25
12.5050.1.004	3-31	14
12.5050.1.005	3-31	14
12.5050.1.500	3-14	17
13.1100.0.000	3-26	06
14.1089.0.000	3-31	04
14.1155.1.000	3-31	15
17.0002.1.274		
17.0002.1.274	3-8	09

PART NUMBER	PAGE	DET
17.0002.4.121	3-26	14
17.0002.4.140	3-4	03
17.0002.4.277	3-31	02
17.0002.4.406	3-57	03
17.0002.5.228	3-28	19
17.0002.5.241	3-4	29
17.0002.6.187	3-40	41
17.0002.6.188	3-6	39
17.0002.7.148	3-21	11
17.0002.7.149	3-21	10
17.0002.7.575	3-15	11
17.0002.7.584	3-17	04
17.0002.7.589	3-15	01
17.0002.7.593	3-44	10
17.0002.7.596	3-44	10
17.0002.8.102	3-49	21
17.0003.5.431	3-6	32
17.0003.5.431	3-40	30
17.0003.5.475	3-7	15
17.0003.5.479	3-7	14
17.0003.5.483	3-6	30
17.0003.5.711	3-11	11
17.0003.5.711	3-11	22
17.0003.5.721	3-11	28
17.0003.5.809	3-20	41
17.0003.5.810	3-20	38
17.0003.5.992	3-33	63
17.0003.6.156	3-33	69
17.0003.6.156	3-35	02
17.0003.6.156	3-37	02
17.0003.6.156	3-53	02
17.0003.6.156	3-55	02
17.0003.6.156	3-67	69
17.0003.8.034	3-33	10
17.0003.8.034	3-67	10
17.0003.8.035	3-33	10
17.0003.8.035	3-67	10
17.0003.9.047	3-56	01
17.0004.0.001		
17.0004.0.001	3-38	01
17.0004.1.189	3-3	37
17.0004.1.245	3-51	18
17.0004.3.259	3-18	06
17.0004.3.260	3-22	09
17.0004.3.261	3-23	24
17.0004.3.478	3-47	06
17.0004.3.485	3-4	13
17.0004.4.557	3-18	25
17.0004.4.559	3-16	10
17.0004.4.560	3-45	10
17.0004.4.793	3-10	13
17.0004.4.795	3-10	12
17.0004.4.797	3-7	26
17.0004.4.806	3-13	06
17.0004.4.812	3-22	26
17.0004.4.819	3-6	38
17.0004.4.829	3-11	24
17.0004.4.950	3-30	06
17.0004.4.951	3-30	10
17.0004.4.987	3-64	02
17.0004.6.939	3-9	13
17.0004.6.946	3-62	55
17.0004.7.078	3-63	17
17.0004.7.079	3-64	09
17.0004.7.157	3-29	15
17.0004.7.158	3-51	15
17.0004.7.242	3-7	04
17.0004.8.569	3-51	02
17.0004.8.900	3-3	18
17.0004.8.902	3-3	38
17.0004.8.904	3-3	40
17.0004.8.932	3-29	01
17.0004.8.933	3-29	02
17.0004.9.248	3-41	08
17.0004.9.509	3-19	25
17.0004.9.579	3-65	26
17.0004.9.849	3-28	14
17.0004.9.850	3-10	08
17.0004.9.858	3-6	07
17.0004.9.893	3-53	08
17.0004.9.893	3-55	08
17.0004.9.893	3-56	07
17.0004.9.893	3-67	75
17.0004.9.894	3-11	09
17.0004.9.894	3-33	24
17.0004.9.894	3-67	24
17.0004.9.895	3-11	06
17.0004.9.895	3-33	23
17.0004.9.895	3-67	23
17.0005.0.010	3-63	09
17.0006.0.151	3-45	07
17.0006.0.152	3-16	07
17.0009.4.105	3-53	12
17.0009.4.106	3-55	12
17.0009.4.107	3-33	18
17.0009.4.107	3-35	01
17.0009.4.107	3-37	01
17.0009.4.107	3-53	01
17.0009.4.107	3-55	01
17.0009.4.107	3-67	18
17.0011.1.148	3-23	04
17.0011.1.173	3-29	16
17.0011.1.230	3-6	26
17.0011.1.230	3-7	22
17.0011.1.234	3-3	08
17.0011.1.240	3-13	11
17.0011.1.240	3-14	26
17.0011.1.242	3-13	20
17.0011.1.248	3-11	12
17.0011.1.249	3-11	33
17.0011.1.250	3-30	03
17.0011.1.261	3-5	01
17.0011.1.302	3-1	27
17.0011.1.364	3-23	15
17.0011.2.013	3-10	27
17.0011.2.014	3-30	05
17.0011.3.022	3-25	15
17.0011.3.113	3-17	36
17.0011.3.141	3-50	20
17.0011.5.019	3-17	12
17.0011.7.009	3-16	01
17.0011.8.041	3-12	13
17.0012.0.113		
17.0012.0.113	3-9	06
17.0012.0.114	3-5	15
17.0012.0.120	3-8	25
17.0012.0.121	3-62	30
17.0012.0.124	3-1	17
17.0012.0.127	3-65	21
17.0012.0.215	3-6	10
17.0012.0.217	3-3	35
17.0012.0.217	3-4	28
17.0012.0.217	3-6	14
17.0012.0.227	3-4	26
17.0012.0.229	3-27	48
17.0012.0.232	3-14	05

PART NUMBER	PAGE	DET
17.0012.0.233	3-21	02
17.0012.0.234	3-19	31
17.0012.0.234	3-20	39
17.0012.0.234	3-23	09
17.0012.0.246	3-17	20
17.0012.0.246	3-19	09
17.0012.0.246	3-44	01
17.0012.0.248	3-25	14
17.0012.0.262	3-21	03
17.0012.0.267	3-21	26
17.0012.0.267	3-22	22
17.0012.0.280	3-33	64
17.0012.0.283	3-33	67
17.0012.0.290	3-7	09
17.0012.0.290	3-12	16
17.0012.0.290	3-65	07
17.0012.0.301	3-9	14
17.0012.0.303	3-20	24
17.0012.0.303	3-49	27
17.0012.0.319	3-22	16
17.0012.0.328	3-17	05
17.0012.0.328	3-20	35
17.0012.0.328	3-46	39
17.0012.0.331	3-17	03
17.0012.0.404	3-11	37
17.0012.0.425	3-17	32
17.0012.0.457	3-13	32
17.0012.0.516	3-13	28
17.0012.0.543	3-7	20
17.0012.0.543	3-8	29
17.0012.0.549	3-15	16
17.0012.0.565	3-24	09
17.0012.0.568	3-20	06
17.0012.0.570	3-8	20
17.0012.0.571	3-17	18
17.0012.0.572	3-20	02
17.0012.0.572	3-49	17
17.0012.0.573	3-20	14
17.0012.0.573	3-49	08
17.0012.0.576	3-6	33
17.0012.0.605	3-11	26
17.0012.0.627	3-19	30
17.0012.0.635	3-47	25
17.0012.0.677	3-44	04
17.0012.1.137	3-12	14
17.0012.1.137	3-64	03
17.0012.1.139	3-11	21
17.0012.1.140	3-11	19
17.0012.1.142	3-11	16
17.0012.1.148	3-23	29
17.0012.1.169	3-6	36
17.0012.2.031	3-7	08
17.0012.2.400	3-12	27
17.0012.2.403	3-63	55
17.0012.3.054	3-20	28
17.0012.4.011	3-25	18
17.0012.4.042	3-4	01
17.0012.4.051	3-50	01
17.0012.4.070	3-49	06
17.0012.4.098	3-3	34
17.0012.4.103	3-27	10
17.0012.6.067	3-62	01
17.0012.6.078	3-27	29
17.0012.6.096	3-26	17
17.0012.6.110	3-15	25
17.0012.6.118	3-44	26
17.0012.6.149	3-14	25
17.0012.6.400	3-49	29
17.0012.7.007	3-14	31
17.0013.1.045		
17.0013.1.045	3-21	09
17.0013.1.047	3-20	29
17.0013.1.171	3-59	12
17.0013.1.171	3-59	22
17.0013.1.174	3-63	24
17.0013.1.175	3-62	49
17.0013.1.177	3-58	04
17.0013.1.179	3-63	29
17.0013.1.179	3-65	20
17.0013.1.259	3-64	04
17.0013.1.341	3-3	21
17.0013.1.343	3-4	20
17.0013.1.413	3-26	15
17.0013.1.414	3-20	08
17.0013.1.414	3-49	03
17.0013.1.415	3-17	16
17.0013.1.415	3-29	06
17.0013.1.416	3-21	13
17.0013.1.417	3-24	15
17.0013.1.418	3-24	07
17.0013.1.419	3-24	16
17.0013.1.458	3-50	24
17.0013.1.461	3-26	20
17.0013.1.483	3-59	24
17.0013.1.485	3-49	30
17.0013.2.090	3-14	14
17.0013.2.090	3-18	19
17.0013.2.092	3-21	19
17.0013.2.119	3-5	04
17.0013.2.119	3-9	21
17.0013.2.120	3-5	14
17.0013.2.120	3-9	02
17.0013.2.120	3-61	04
17.0013.2.192	3-14	01
17.0013.4.027	3-17	01
17.0013.5.067	3-20	11
17.0013.5.068	3-19	22
17.0013.5.069	3-21	06
17.0013.6.032	3-18	21
17.0013.9.400	3-49	24
17.0014.1.015		
17.0014.1.015	3-10	02
17.0014.1.015	3-15	20
17.0014.1.033	3-18	11
17.0014.1.066	3-17	29
17.0014.1.068	3-60	13
17.0014.1.069	3-61	08
17.0014.1.070	3-62	22
17.0014.1.180	3-16	22
17.0014.1.205	3-24	06
17.0014.1.205	3-50	07
17.0014.1.205	3-62	37
17.0014.1.243	3-1	04
17.0014.1.244	3-1	05
17.0014.1.285	3-60	02
17.0014.2.004	3-61	14
17.0014.2.005	3-62	05
17.0014.2.011	3-14	32
17.0014.3.011	3-22	12
17.0014.3.013	3-63	18
17.0014.3.014	3-63	06
17.0014.3.015	3-63	02
17.0014.3.403	3-59	06
17.0014.4.001	3-24	13
17.0014.4.011	3-59	18
17.0014.4.036	3-13	01

PART NUMBER	PAGE	DET
17.0014.4.036	3-59	01
17.0014.6.002	3-56	03
17.0014.6.057	3-3	36
17.0015.2.053	3-8	16
17.0015.2.110	3-27	02
17.0015.4.031	3-22	19
17.0016.1.045		
17.0016.1.045	3-15	21
17.0016.1.054	3-56	02
17.0016.1.093	3-12	24
17.0016.1.093	3-18	23
17.0016.1.094	3-50	26
17.0016.1.094	3-60	12
17.0016.1.094	3-60	15
17.0016.1.100	3-60	16
17.0016.1.135	3-3	15
17.0016.1.137	3-9	15
17.0016.1.137	3-33	73
17.0016.1.140	3-6	03
17.0016.1.140	3-10	14
17.0016.1.140	3-24	08
17.0016.1.140	3-28	15
17.0016.1.143	3-10	17
17.0016.1.146	3-13	19
17.0016.1.149	3-11	01
17.0016.1.161	3-26	02
17.0016.1.179	3-9	16
17.0016.1.179	3-11	02
17.0016.1.179	3-14	30
17.0016.1.179	3-15	19
17.0016.1.179	3-25	22
17.0016.1.180	3-23	26
17.0016.1.180	3-24	11
17.0016.1.180	3-25	19
17.0016.1.180	3-50	17
17.0016.1.182	3-16	15
17.0016.1.182	3-21	20
17.0016.1.185	3-22	24
17.0016.1.185	3-27	03
17.0016.1.190	3-1	11
17.0016.1.190	3-6	02
17.0016.1.190	3-13	10
17.0016.1.190	3-14	13
17.0016.1.255	3-33	60
17.0016.1.258	3-23	11

PART NUMBER	PAGE	DET
17.0016.1.260	3-17	14
17.0016.1.288	3-17	34
17.0016.1.290	3-16	20
17.0016.1.291	3-22	03
17.0016.1.292	3-50	21
17.0016.1.297	3-23	31
17.0016.1.302	3-27	31
17.0016.1.308	3-31	10
17.0016.1.328	3-20	17
17.0016.1.328	3-24	22
17.0016.2.003	3-15	10
17.0016.3.051	3-13	30
17.0016.3.069	3-27	36
17.0016.3.105	3-33	07
17.0016.3.105	3-67	07
17.0016.3.118	3-50	25
17.0016.3.400	3-26	19
17.0017.1.016	3-12	11
17.0017.4.054	3-41	11
17.0017.4.058	3-7	01
17.0017.4.075	3-31	17
17.0019.0.221		
17.0019.0.221	3-9	28
17.0019.0.222	3-9	18
17.0019.0.222	3-18	29
17.0019.0.225	3-7	03
17.0019.0.226	3-9	04
17.0019.0.228	3-11	17
17.0019.0.228	3-20	09
17.0019.0.228	3-49	16
17.0019.0.230	3-62	50
17.0019.0.230	3-63	49
17.0019.0.232	3-62	16
17.0019.0.233	3-62	40
17.0019.0.234	3-62	07
17.0019.0.235	3-62	42
17.0019.0.239	3-62	51
17.0019.0.251	3-28	24
17.0019.0.294	3-62	26
17.0019.0.333	3-41	10
17.0019.0.346	3-3	32
17.0019.0.346	3-10	15
17.0019.0.346	3-13	31
17.0019.0.346	3-17	31
17.0019.0.346	3-23	02

PART NUMBER	PAGE	DET
17.0019.0.346	3-25	20
17.0019.0.346	3-28	16
17.0019.0.346	3-62	44
17.0019.0.346	3-63	10
17.0019.0.364	3-6	01
17.0019.0.364	3-16	16
17.0019.0.364	3-21	21
17.0019.0.367	3-26	08
17.0019.0.371	3-7	02
17.0019.0.371	3-16	19
17.0019.0.398	3-10	10
17.0019.0.441	3-3	01
17.0019.0.441	3-26	03
17.0019.0.441	3-33	17
17.0019.0.441	3-67	17
17.0019.0.469	3-14	11
17.0019.0.517	3-6	19
17.0019.0.551	3-20	15
17.0019.0.560	3-17	35
17.0019.0.585	3-33	61
17.0019.0.602	3-4	30
17.0019.0.605	3-5	09
17.0019.0.610	3-14	03
17.0019.1.062	3-8	23
17.0019.1.063	3-14	08
17.0019.1.088	3-11	14
17.0019.1.107	3-33	72
17.0019.1.108	3-26	09
17.0019.1.109	3-3	14
17.0019.2.021	3-1	09
17.0019.2.061	3-6	05
17.0019.2.061	3-18	22
17.0019.2.066	3-20	34
17.0019.2.077	3-7	18
17.0019.2.086	3-31	19
17.0019.4.065	3-22	14
17.0019.4.065	3-23	10
17.0019.5.019	3-27	35
17.0019.5.040	3-20	32
17.0019.5.047	3-31	18
17.0019.5.048	3-31	20
17.0019.5.049	3-14	23
17.0019.5.050	3-43	23
17.0019.5.050	3-59	26
17.0019.6.033	3-14	24

INDEX

PART NUMBER	PAGE	DET
17.0020.0.025		
17.0020.0.025	3-33	66
17.0021.0.018	3-14	07
17.0021.0.021	3-31	03
17.0021.1.045	3-5	18
17.0021.1.068	3-4	07
17.0021.1.069	3-9	07
17.0021.1.070	3-5	06
17.0021.1.071	3-14	12
17.0021.1.073	3-17	27
17.0026.0.213	3-43	40
17.0026.0.213	3-59	31
17.0026.0.214	3-23	13
17.0026.0.214	3-29	28
17.0026.0.215	3-12	18
17.0026.0.215	3-23	05
17.0026.0.216	3-22	08
17.0026.0.217	3-20	33
17.0026.0.217	3-49	01
17.0026.0.219	3-62	33
17.0026.0.346	3-62	08
17.0026.0.481	3-4	06
17.0026.0.553	3-27	09
17.0026.1.082	3-17	15
17.0026.1.084	3-8	32
17.0026.1.084	3-26	13
17.0026.1.084	3-27	12
17.0026.2.020	3-64	10
17.0026.2.063	3-27	25
17.0026.2.072	3-27	34
17.0026.2.077	3-8	17
17.0026.2.078	3-12	12
17.0026.2.078	3-27	25
17.0026.3.013	3-13	14
17.0026.3.013	3-17	06
17.0026.3.014	3-3	47
17.0026.3.014	3-8	28
17.0026.3.014	3-59	16
17.0026.3.014	3-63	42
17.0026.3.019	3-21	33
17.0026.3.123	3-6	27
17.0026.3.126	3-24	19
17.0026.3.127	3-63	16
17.0026.3.128	3-58	05
17.0026.3.130	3-59	08
17.0026.3.168	3-30	09
17.0026.3.168	3-59	40
17.0026.3.173	3-11	35
17.0026.3.189	3-3	20
17.0026.3.189	3-25	17
17.0026.3.231	3-3	27
17.0026.3.244	3-30	13
17.0026.3.244	3-63	43
17.0026.3.245	3-13	27
17.0026.3.245	3-61	05
17.0026.3.256	3-22	02
17.0026.3.257	3-21	22
17.0026.3.258	3-24	10
17.0026.3.270	3-50	05
17.0026.4.035	3-12	02
17.0026.4.035	3-64	12
17.0026.4.190	3-63	27
17.0026.4.190	3-65	09
17.0026.4.257	3-27	14
17.0026.4.292	3-11	13
17.0026.4.293	3-11	25
17.0027.1.073	3-8	30
17.0027.1.223	3-33	05
17.0027.1.223	3-67	05
17.0027.1.255	3-59	15
17.0027.1.345	3-27	45
17.0027.1.349	3-25	11
17.0027.1.370	3-29	23
17.0027.1.404	3-53	03
17.0027.1.404	3-55	03
17.0027.1.404	3-56	06
17.0027.1.405	3-19	21
17.0027.1.410	3-13	04
17.0027.1.410	3-59	04
17.0027.1.411	3-6	16
17.0027.1.412	3-6	18
17.0027.1.413	3-6	41
17.0027.1.413	3-40	39
17.0027.1.416	3-1	24
17.0027.1.419	3-29	05
17.0027.1.463	3-4	27
17.0027.1.503	3-13	29
17.0027.1.614	3-62	15
17.0027.1.799	3-6	11
17.0027.1.799	3-23	28
17.0027.2.053	3-28	20
17.0027.4.045	3-10	23
17.0027.4.083	3-13	24
17.0027.4.083	3-30	12
17.0027.4.084	3-13	17
17.0027.4.084	3-22	27
17.0027.4.085	3-8	03
17.0027.4.090	3-11	34
17.0027.4.090	3-22	07
17.0027.4.090	3-24	23
17.0027.4.090	3-27	38
17.0027.4.090	3-62	35
17.0027.4.100	3-63	31
17.0027.4.100	3-65	08
17.0027.4.106	3-49	13
17.0027.4.127	3-17	25
17.0027.4.129	3-18	14
17.0027.4.148	3-15	22
17.0028.1.125	3-17	08
17.0028.3.102	3-14	28
17.0028.3.117	3-3	10
17.0028.3.117	3-33	46
17.0028.3.117	3-67	46
17.0028.3.171	3-50	02
17.0028.3.408	3-57	05
17.0031.0.034		
17.0031.0.034	3-3	22
17.0031.0.196	3-8	27
17.0031.0.197	3-49	12
17.0031.0.199	3-6	28
17.0031.0.200	3-61	06
17.0031.0.200	3-63	37
17.0031.0.201	3-58	06
17.0031.0.328	3-14	29
17.0031.0.328	3-27	08
17.0031.0.351	3-19	10
17.0031.0.351	3-40	36
17.0031.0.352	3-27	19
17.0031.0.396	3-23	19
17.0031.0.397	3-64	15
17.0031.0.405	3-17	09
17.0031.0.406	3-12	22
17.0031.0.423	3-21	23
17.0031.0.425	3-6	43
17.0031.0.425	3-18	03
17.0031.0.425	3-27	15
17.0031.0.425	3-31	24

PART NUMBER	PAGE	DET
17.0031.0.425	3-40	40
17.0031.0.426	3-12	04
17.0031.0.426	3-50	09
17.0031.0.427	3-17	07
17.0031.0.428	3-6	21
17.0031.0.428	3-12	03
17.0031.0.429	3-18	08
17.0031.0.430	3-21	01
17.0031.0.433	3-1	18
17.0031.0.434	3-14	09
17.0031.0.438	3-27	23
17.0031.0.438	3-63	23
17.0031.0.440	3-27	27
17.0031.0.480	3-4	04
17.0031.1.089	3-22	01
17.0031.1.091	3-24	18
17.0031.2.013	3-1	03
17.0031.2.022	3-21	04
17.0031.2.024	3-18	04
17.0031.2.025	3-16	09
17.0031.3.027	3-8	13
17.0031.3.030	3-23	14
17.0031.3.030	3-29	29
17.0031.3.212	3-59	20
17.0031.3.213	3-62	32
17.0031.3.214	3-62	48
17.0031.3.277	3-33	58
17.0031.3.330	3-3	07
17.0031.3.403	3-63	41
17.0031.3.403	3-63	54
17.0031.4.031	3-21	15
17.0031.4.083	3-24	05
17.0031.4.083	3-62	28
17.0031.4.089	3-62	09
17.0031.4.130	3-43	41
17.0031.4.205	3-7	24
17.0031.5.041	3-8	21
17.0031.6.063	3-12	26
17.0031.7.039	3-1	14
17.0031.7.045	3-23	06
17.0031.8.198	3-27	06
17.0032.0.113		
17.0032.0.113	3-43	39
17.0032.0.113	3-59	33
17.0032.0.113	3-62	10
17.0032.0.114	3-63	30
17.0032.0.114	3-65	19
17.0032.0.193	3-4	10
17.0032.0.194	3-6	25
17.0032.0.261	3-13	25
17.0032.0.264	3-24	17
17.0032.1.074	3-18	27
17.0032.2.030	3-3	28
17.0032.2.030	3-21	32
17.0032.2.162	3-62	47
17.0032.2.164	3-58	01
17.0032.2.182	3-63	15
17.0032.2.204	3-27	17
17.0032.2.268	3-10	01
17.0032.2.272	3-9	27
17.0032.2.282	3-9	17
17.0032.2.305	3-30	11
17.0032.3.011	3-19	18
17.0032.3.094	3-60	05
17.0032.3.162	3-13	22
17.0032.3.196	3-16	13
17.0032.5.031	3-13	07
17.0032.6.200	3-25	16
17.0032.6.230	3-27	13
17.0032.8.073	3-63	26
17.0032.8.133	3-22	21
17.0032.8.134	3-27	16
17.0032.8.209	3-30	14
17.0032.8.227	3-43	13
17.0033.0.102	3-7	06
17.0033.0.217	3-50	23
17.0033.0.218	3-50	27
17.0033.1.010	3-23	12
17.0033.1.011	3-22	04
17.0033.1.153	3-16	18
17.0033.1.170	3-29	26
17.0033.1.403	3-63	14
17.0033.2.030	3-23	18
17.0033.2.104	3-29	25
17.0033.2.126	3-10	26
17.0033.2.133	3-4	12
17.0033.2.143	3-17	38
17.0033.3.051	3-60	01
17.0033.3.051	3-62	38
17.0033.3.052	3-62	46
17.0033.3.098	3-62	27
17.0033.3.129	3-10	16
17.0033.3.130	3-28	17
17.0033.3.131	3-10	20
17.0033.3.132	3-16	06
17.0033.3.133	3-21	24
17.0033.3.134	3-23	20
17.0033.3.138	3-9	10
17.0033.3.158	3-11	23
17.0033.5.052	3-22	10
17.0033.5.113	3-14	16
17.0033.5.118	3-64	16
17.0033.5.127	3-7	23
17.0033.5.138	3-27	30
17.0033.8.088	3-11	08
17.0033.8.089	3-11	05
17.0033.8.090	3-61	09
17.0033.8.202	3-40	33
17.0034.1.234	3-20	21
17.0034.2.145	3-18	13
17.0034.2.147	3-61	02
17.0034.2.219	3-18	02
17.0034.2.328	3-16	08
17.0034.6.039	3-9	26
17.0034.9.052	3-58	12
17.0034.9.155	3-13	12
17.0034.9.156	3-14	10
17.0034.9.201	3-5	08
17.0034.9.201	3-31	01
17.0034.9.205	3-29	11
17.0038.2.012	3-15	15
17.0038.3.177	3-25	12
17.0038.4.056	3-33	14
17.0038.4.056	3-67	14
17.0041.0.232		
17.0041.0.232	3-5	16
17.0041.0.233	3-62	52
17.0041.0.548	3-7	25
17.0041.0.550	3-10	06
17.0041.0.551	3-7	07
17.0041.0.554	3-13	09
17.0041.1.094	3-11	15
17.0041.2.020	3-21	17
17.0041.2.149	3-4	21
17.0041.2.160	3-7	11
17.0041.5.030	3-5	02

PART NUMBER	PAGE	DET
17.0041.6.129	3-8	22
17.0041.8.003	3-28	18
17.0041.8.005	3-20	18
17.0041.8.008	3-24	14
17.0041.8.067	3-19	19
17.0041.8.067	3-60	17
17.0041.8.096	3-10	19
17.0041.8.181	3-16	12
17.0041.8.400	3-26	18
17.0042.1.279	3-3	31
17.0042.1.282	3-6	12
17.0042.1.283	3-8	06
17.0042.1.332	3-28	13
17.0042.1.332	3-33	68
17.0042.2.216	3-8	24
17.0042.4.120	3-4	08
17.0042.4.150	3-50	22
17.0042.5.041	3-18	10
17.0042.5.177	3-58	11
17.0042.5.179	3-58	14
17.0042.5.247	3-9	20
17.0042.5.247	3-58	16
17.0042.5.249	3-9	29
17.0042.5.256	3-4	05
17.0042.5.280	3-5	20
17.0042.5.287	3-9	03
17.0042.5.288	3-9	09
17.0042.5.408	3-57	04
17.0042.6.053	3-10	24
17.0042.6.054	3-14	19
17.0042.6.078	3-27	32
17.0042.6.082	3-53	06
17.0042.6.082	3-55	06
17.0042.6.083	3-55	06
17.0042.6.084	3-55	06
17.0042.6.085	3-55	06
17.0042.6.086	3-53	06
17.0042.6.086	3-55	06
17.0042.6.089	3-53	06
17.0042.6.090	3-53	06
17.0043.1.011	3-5	07
17.0043.6.018	3-16	04
17.0043.6.277	3-8	08
17.0043.6.280	3-5	11
17.0043.6.351	3-7	21
17.0043.6.351	3-8	10

PART NUMBER	PAGE	DET
17.0043.6.352	3-10	11
17.0043.6.353	3-19	24
17.0043.6.437	3-13	26
17.0044.1.211	3-3	48
17.0044.1.211	3-63	46
17.0044.1.234	3-40	37
17.0044.1.240	3-27	40
17.0044.1.255	3-22	05
17.0044.1.325	3-14	21
17.0044.1.443	3-1	08
17.0044.1.509	3-33	62
17.0044.1.582	3-15	26
17.0044.1.618	3-14	36
17.0044.1.620	3-61	12
17.0044.2.224	3-18	15
17.0044.2.225	3-18	24
17.0044.2.226	3-62	14
17.0044.2.236	3-58	13
17.0044.2.327	3-62	11
17.0044.2.534	3-6	23
17.0044.2.642	3-62	06
17.0044.5.114	3-14	04
17.0045.1.062	3-59	19
17.0045.1.064	3-62	34
17.0045.1.099	3-6	20
17.0045.1.106	3-18	26
17.0045.1.106	3-19	05
17.0045.3.004	3-8	26
17.0045.3.006	3-8	11
17.0045.9.048	3-14	37
17.0045.9.055	3-43	37
17.0045.9.055	3-59	36
17.0045.9.059	3-14	22
17.0045.9.400	3-62	12
17.0051.0.066		
17.0051.0.066	3-31	11
17.0052.0.315	3-14	18
17.0052.0.426	3-31	23
17.0055.1.152	3-14	15
17.0055.1.153	3-4	09
17.0055.1.158	3-12	23
17.0055.2.172	3-5	17
17.0055.3.025	3-16	02
17.0055.3.028	3-45	02
17.0055.5.042	3-8	12

PART NUMBER	PAGE	DET
17.0056.2.062	3-57	02
17.0056.2.062	3-58	15
17.0056.2.063	3-58	10
17.0057.0.056	3-14	34
17.0057.0.057	3-14	35
17.0057.1.045	3-18	09
17.0061.2.177		
17.0061.2.177	3-62	39
17.0061.2.290	3-24	03
17.0061.2.336	3-10	25
17.0061.2.343	3-13	23
17.0061.2.344	3-25	10
17.0061.2.345	3-25	13
17.0061.2.346	3-22	13
17.0061.2.415	3-26	16
17.0061.2.424	3-60	11
17.0061.3.351	3-27	46
17.0061.3.609	3-62	36
17.0061.5.027	3-22	11
17.0061.6.015	3-63	25
17.0061.6.028	3-27	41
17.0062.2.650	3-59	25
17.0062.3.400	3-59	13
17.0062.5.015	3-23	16
17.0062.5.019	3-15	02
17.0062.5.075	3-62	03
17.0062.5.144	3-23	30
17.0062.5.149	3-17	37
17.0062.5.171	3-44	05
17.0062.5.172	3-44	06
17.0062.5.179	3-26	05
17.0062.5.180	3-44	02
17.0062.5.411	3-62	31
17.0062.5.412	3-63	22
17.0062.7.048	3-60	06
17.0063.0.253	3-7	16
17.0063.1.004	3-62	43
17.0063.1.073	3-11	18
17.0063.2.154	3-13	08
17.0063.2.160	3-21	34
17.0063.3.109	3-63	28
17.0063.3.195	3-13	13
17.0063.4.166	3-7	12
17.0063.4.169	3-6	24
17.0063.4.172	3-6	31

PART NUMBER	PAGE	DET
17.0063.5.089	3-24	12
17.0063.5.168	3-21	08
17.0063.5.169	3-21	07
17.0063.5.175	3-24	20
17.0063.5.184	3-4	02
17.0063.5.214	3-29	27
17.0063.5.234	3-17	11
17.0063.5.245	3-20	36
17.0063.5.266	3-27	05
17.0063.5.275	3-50	03
17.0063.5.276	3-50	06
17.0063.5.310	3-49	10
17.0063.5.402	3-64	01
17.0063.5.411	3-61	16
17.0063.6.044	3-16	11
17.0063.6.070	3-6	37
17.0063.6.169	3-64	17
17.0063.6.172	3-61	07
17.0063.6.220	3-17	02
17.0063.6.232	3-63	34
17.0063.6.256	3-10	18
17.0063.6.257	3-7	10
17.0063.6.260	3-13	05
17.0063.6.262	3-22	25
17.0063.6.265	3-16	14
17.0063.6.267	3-24	04
17.0063.6.289	3-20	12
17.0063.6.290	3-20	19
17.0063.6.292	3-23	07
17.0063.6.293	3-22	18
17.0063.6.295	3-23	01
17.0063.6.301	3-45	14
17.0063.6.304	3-40	43
17.0063.6.308	3-16	17
17.0063.6.309	3-46	11
17.0063.6.444	3-59	05
17.0063.6.448	3-59	07
17.0063.6.450	3-60	10
17.0063.6.460	3-23	21
17.0064.1.089		
17.0064.1.089	3-13	18
17.0064.1.090	3-6	06
17.0064.1.098	3-43	12
17.0064.1.402	3-59	09
17.0064.1.403	3-58	21
17.0064.3.025	3-59	34
17.0064.5.170	3-17	30
17.0064.5.186	3-65	06
17.0064.5.753	3-19	27
17.0064.5.814	3-25	21
17.0064.5.863	3-33	20
17.0064.5.863	3-67	20
17.0064.5.921	3-63	21
17.0064.5.947	3-15	17
17.0064.5.953	3-62	19
17.0064.5.958	3-63	01
17.0064.5.959	3-65	15
17.0064.5.960	3-65	03
17.0064.5.970	3-65	14
17.0064.6.117	3-10	03
17.0064.6.122	3-13	21
17.0064.6.130	3-20	05
17.0064.6.284	3-30	01
17.0064.6.298	3-17	13
17.0064.6.327	3-19	29
17.0064.6.327	3-65	23
17.0064.6.336	3-11	31
17.0064.6.401	3-53	05
17.0064.6.401	3-55	05
17.0064.6.402	3-55	05
17.0064.6.404	3-50	04
17.0064.6.416	3-17	23
17.0064.6.446	3-46	38
17.0064.6.483	3-58	19
17.0064.7.000	3-29	08
17.0064.7.113	3-68	15
17.0064.7.162	3-12	05
17.0064.7.162	3-64	18
17.0064.7.164	3-29	10
17.0064.7.224	3-20	20
17.0064.7.224	3-49	11
17.0064.7.225	3-20	16
17.0064.7.226	3-18	05
17.0064.7.262	3-19	11
17.0064.7.263	3-12	15
17.0064.7.275	3-67	02
17.0064.7.301	3-47	05
17.0064.7.400	3-42	15
17.0064.7.429	3-33	02
17.0064.8.106	3-27	11
17.0064.8.112	3-3	44
17.0066.7.157	3-20	13
17.0066.7.158	3-20	31
17.0066.7.161	3-20	13
17.0066.7.162	3-20	31
17.0066.7.177	3-20	13
17.0066.7.177	3-33	22
17.0066.7.177	3-35	04
17.0066.7.177	3-67	22
17.0066.7.178	3-20	31
17.0066.7.178	3-33	21
17.0066.7.178	3-35	03
17.0066.7.178	3-67	21
17.0067.1.025	3-6	34
17.0067.2.098	3-5	12
17.0067.2.164	3-15	06
17.0067.2.183	3-39	10
17.0067.2.186	3-31	21
17.0067.2.411	3-5	10
17.0067.2.413	3-61	03
17.0067.4.092	3-62	04
17.0067.4.101	3-33	38
17.0067.4.101	3-37	03
17.0067.4.102	3-33	39
17.0067.4.102	3-37	04
17.0067.4.127	3-15	03
17.0067.4.133	3-33	40
17.0067.4.133	3-67	40
17.0067.4.135	3-33	41
17.0067.4.135	3-67	41
17.0067.4.137	3-33	42
17.0067.4.137	3-67	42
17.0067.4.139	3-33	43
17.0067.4.139	3-67	43
17.0067.4.141	3-33	44
17.0067.4.141	3-67	44
17.0067.4.143	3-33	45
17.0067.4.143	3-67	45
17.0067.4.144	3-33	47
17.0067.4.144	3-67	47
17.0067.4.145	3-33	48
17.0067.4.151	3-33	49
17.0067.4.151	3-67	49
17.0067.4.153	3-33	50
17.0067.4.153	3-35	05
17.0067.4.153	3-67	50
17.0067.4.155	3-18	01

PART NUMBER	PAGE	DET
17.0067.4.155	3-67	48
17.0067.4.157	3-33	51
17.0067.4.157	3-35	08
17.0067.4.157	3-67	51
17.0067.4.159	3-33	52
17.0067.4.159	3-67	52
17.0067.4.160	3-33	53
17.0067.4.160	3-67	53
17.0067.4.161	3-33	54
17.0067.4.161	3-67	54
17.0067.4.184	3-44	03
17.0067.4.185	3-47	01
17.0067.4.223	3-44	03
17.0067.4.224	3-47	01
17.0067.4.400	3-60	14
17.0067.4.404	3-61	01
17.0067.4.405	3-67	74
17.0067.5.152	3-9	08
17.0069.4.047	3-53	09
17.0069.4.047	3-55	09
17.0069.4.047	3-56	08
17.0069.4.047	3-67	76
17.0069.4.048	3-11	10
17.0069.4.048	3-33	26
17.0069.4.048	3-67	26
17.0069.4.049	3-11	07
17.0069.4.049	3-33	25
17.0069.4.049	3-67	25
17.0071.0.203		
17.0071.0.203	3-57	01
17.0071.0.205	3-1	07
17.0071.3.405	3-1	02
17.0071.4.170	3-19	17
17.0071.4.178	3-48	17
17.0071.4.202	3-65	02
17.0073.1.018	3-12	21
17.0074.4.058	3-21	29
17.0074.4.405	3-10	05
17.0074.4.407	3-1	21
17.0074.4.421	3-18	07
17.0074.4.451	3-14	33
17.0074.4.464	3-1	23
17.0074.4.501	3-46	21
17.0074.4.504	3-17	21
17.0074.4.534	3-61	17

PART NUMBER	PAGE	DET
17.0074.6.150	3-3	13
17.0074.6.151	3-29	18
17.0075.4.012	3-3	30
17.0076.5.087	3-21	27
17.0081.0.261		
17.0081.0.261	3-63	07
17.0081.0.421	3-3	25
17.0081.0.485	3-27	39
17.0081.0.515	3-58	08
17.0081.1.645	3-20	26
17.0081.1.646	3-20	30
17.0081.3.064	3-21	14
17.0081.3.957	3-15	12
17.0081.3.960	3-15	13
17.0081.4.295	3-40	35
17.0081.4.296	3-40	35
17.0081.4.312	3-40	09
17.0081.4.313	3-6	09
17.0081.4.375	3-7	19
17.0081.4.376	3-5	03
17.0081.4.450	3-64	14
17.0081.4.451	3-58	20
17.0081.5.002	3-18	30
17.0081.5.003	3-12	17
17.0081.5.047	3-20	01
17.0081.5.047	3-49	18
17.0081.5.048	3-20	07
17.0081.5.048	3-49	02
17.0081.5.081	3-64	06
17.0081.5.091	3-21	05
17.0081.5.171	3-22	17
17.0081.5.171	3-23	08
17.0081.5.197	3-27	21
17.0081.5.403	3-49	25
17.0081.5.405	3-49	23
17.0081.6.201	3-19	23
17.0081.8.377	3-5	13
17.0081.8.554	3-19	14
17.0082.1.027	3-11	03
17.0082.1.029	3-59	37
17.0082.1.136	3-28	11
17.0082.1.167	3-27	26
17.0082.2.054	3-21	12
17.0082.2.280	3-63	03
17.0082.2.380	3-27	18

PART NUMBER	PAGE	DET
17.0082.2.481	3-27	37
17.0082.3.431	3-65	04
17.0082.4.525	3-46	22
17.0082.4.545	3-17	22
17.0082.4.554	3-58	09
17.0082.4.558	3-65	18
17.0082.4.561	3-63	33
17.0082.4.563	3-64	05
17.0082.4.811	3-62	02
17.0082.4.997	3-60	04
17.0082.4.998	3-58	03
17.0082.5.108	3-17	10
17.0082.5.563	3-15	09
17.0082.5.869	3-13	15
17.0082.5.884	3-20	25
17.0082.5.884	3-49	28
17.0082.5.893	3-20	04
17.0082.5.898	3-11	36
17.0082.5.911	3-29	20
17.0082.5.944	3-19	20
17.0082.5.996	3-19	07
17.0082.5.997	3-17	33
17.0082.6.000	3-1	22
17.0082.6.000	3-19	02
17.0082.6.159	3-33	65
17.0082.6.160	3-33	57
17.0082.6.191	3-30	08
17.0082.6.227	3-19	28
17.0082.6.242	3-33	04
17.0082.6.242	3-67	04
17.0082.6.273	3-27	28
17.0082.6.348	3-53	11
17.0082.6.348	3-55	11
17.0082.6.430	3-58	18
17.0082.6.433	3-63	53
17.0082.8.017	3-8	18
17.0082.8.060	3-27	33
17.0082.8.071	3-27	24
17.0082.8.084	3-12	10
17.0082.9.974	3-58	02
17.0083.1.096	3-16	03
17.0083.1.413	3-29	07
17.0083.1.414	3-29	13
17.0083.1.429	3-3	19
17.0083.1.438	3-3	12
17.0083.1.630	3-3	42

PART NUMBER	PAGE	DET
17.0083.1.650	3-3	16
17.0083.1.651	3-3	45
17.0083.3.186	3-3	39
17.0083.3.186	3-33	09
17.0083.3.186	3-67	09
17.0083.4.017	3-63	50
17.0083.4.018	3-65	24
17.0083.6.370	3-3	26
17.0083.9.031	3-33	71
17.0083.9.240	3-19	33
17.0083.9.268	3-27	07
17.0084.0.266	3-1	19
17.0084.1.001	3-12	01
17.0084.1.226	3-10	22
17.0084.1.228	3-17	28
17.0084.1.459	3-19	04
17.0084.1.564	3-33	13
17.0084.1.564	3-67	13
17.0084.1.570	3-19	15
17.0084.1.570	3-65	01
17.0084.1.590	3-33	59
17.0087.0.169	3-20	23
17.0087.0.169	3-49	26
17.0087.0.204	3-11	27
17.0094.0.029		
17.0094.0.029	3-1	20
17.0094.0.029	3-3	06
17.0094.0.029	3-21	16
17.0094.0.154	3-3	29
17.0094.0.172	3-26	04
17.0094.1.097	3-3	33
17.0094.1.143	3-14	02
17.0094.2.092	3-6	15
17.0094.3.085	3-17	24
17.0094.3.141	3-14	38
17.0094.3.142	3-14	06
17.0094.5.052	3-1	06
17.0094.5.255	3-29	17
17.0094.5.307	3-13	03
17.0094.5.307	3-59	03
17.0094.5.308	3-9	23
17.0094.5.309	3-23	23
17.0094.5.310	3-18	20
17.0094.5.311	3-18	28
17.0094.5.318	3-6	40

PART NUMBER	PAGE	DET
17.0095.1.272	3-3	03
17.0095.1.273	3-3	04
17.0095.1.273	3-33	15
17.0095.1.273	3-67	15
17.0095.1.274	3-33	16
17.0095.1.274	3-67	16
17.0095.1.276	3-26	25
17.0095.1.309	3-3	05
17.0095.1.329	3-6	29
17.0095.3.042	3-33	56
17.0095.3.178	3-29	24
17.0097.5.366	3-6	42
17.1088.1.050	3-31	25
17.1098.1.050	3-26	01
17.1099.0.000	3-26	07
17.2044.0.001	3-33	37
17.2044.0.002	3-35	09
17.2044.0.003	3-37	08
17.2044.0.060	3-67	37
18.0027.1.344		
18.0027.1.344	3-59	28
18.0031.3.401	3-6	08
18.0033.2.404	3-28	22
18.0056.2.117	3-5	05
18.0056.2.117	3-9	22
18.0056.2.118	3-9	01
18.0081.5.402	3-20	22
18.0081.5.414	3-20	27
18.0081.8.706	3-11	04
18.0087.0.405	3-17	17
18.0087.0.406	3-33	19
18.0087.0.406	3-37	06
18.0087.0.406	3-67	19
19.0002.4.409		
19.0002.4.409	3-8	07
19.0044.5.407	3-8	04
19.0064.5.846	3-33	27
19.0064.5.846	3-67	27
19.0064.5.849	3-33	29
19.0064.5.849	3-35	06
19.0064.5.849	3-67	29
19.0064.5.852	3-33	31
19.0064.5.852	3-35	07
19.0064.5.852	3-37	05

PART NUMBER	PAGE	DET
19.0064.5.852	3-67	31
19.0064.5.854	3-33	32
19.0064.5.854	3-37	07
19.0064.5.854	3-67	32
19.0064.5.855	3-33	33
19.0064.5.855	3-67	33
19.0064.5.856	3-33	34
19.0064.5.856	3-67	34
19.0064.5.857	3-33	35
19.0064.5.857	3-67	35
19.0064.5.858	3-33	36
19.0064.5.858	3-67	36
19.0064.5.951	3-33	28
19.0064.5.951	3-67	28
19.0064.5.952	3-33	30
19.0064.5.952	3-67	30
22.0124.0.000		
22.0124.0.000	3-1	26
22.0124.0.000	3-29	12
39.0026.3.001		
39.0026.3.001	3-64	19