AMF® REECE

Better Ideas, Better Made

MODEL S-100

EYELET BUTTONHOLE MACHINE

PARTS AND SERVICE MANUAL

MACHINE SERIAL No.

PART NUMBER 97. 1700.1.004

This manual is valid from the machine serial No.: J173961

AMF is trademark of AMF Group, Inc.

04/ 2011

AMF® REECE
Better Ideas, Better Made

Warranty Registration Card

(Please Fax or Mail immediately after installation)

Note: All Warranty Claims Void, unless Registration Card on file at AMF Reece HQ

Machine model number:
(S100, S101, S104, S105, S 311, Deco, S4000 , EBS Mark II, ES505, etc)

Manufacturer‘s serial or production number:

Installation Site Information:

Customer‘s Name:

Customer‘s Mailing Address:

Customer‘s Telephone Number:

Supervising Mechanic‘s or Technician‘s Name:

Signature of Supervising Technician:

AMF Reece Technician‘s Name:

AMF Reece Technician‘s Signature:

Type of garment produced at this location?

Average Daily Production Expected from this machine?
(number of buttonholes, jackets sewn, pants produced, buttons sewn, etc)

Any special requirements required at this location?

What other AMF Reece Machines are at this location?

How can we serve you better?

Tovární 837, 798 11 Prostejov, Czech Republic
Fax: +420 582 360 606, e-mail: service@amfreece.cz, website: www.amfreece.com

AMF® REECE
Better Ideas, Better Made

LIMITED WARRANTY ON NEW AMF REECE EQUIPMENT

Warranty provisions:

A ninety (90) day limited service labor warranty to correct defects in installation, workmanship, or material without charge for labor. This portion of the warranty applies to machines sold as "installed" only.

A one (1) year limited material warranty on major component parts to replace materials with defects. Any new part believed defective must be returned freight prepaid to AMF Reece, Inc. for inspection. If, upon inspection, the part or material is determined to be defective, AMF Reece, Inc. will replace it without charge to the customer for parts or material.

Service labor warranty period shall begin on the completed installation date. Material warranty shall begin on the date the equipment is shipped from AMF Reece, Inc.

Exclusions:

Excluded from both service labor warranty and material warranty are: (1) Consumable parts which would be normally considered replaceable in day-to-day operations. These include parts such as needles, knives, loopers and spreaders. (2) Normal adjustment and routine maintenance. This is the sole responsibility of the customer. (3) Cleaning and lubrication of equipment. (4) Parts found to be altered, broken or damaged due to neglect or improper installation or application. (5) Damage caused by the use of non-Genuine AMF Reece parts. (6) Shipping or delivery charges.

There is no service labor warranty for machines sold as "uninstalled".

Equipment installed without the assistance of a certified technician (either an AMF Reece Employee, a Certified Contractor, or that of an Authorized Distributor) will have the limited material warranty only. Only the defective material will be covered. Any charges associated with the use of an AMF Reece Technician or that of a Distributor to replace the defective part will be the customer's responsibility.

NO OTHER WARRANTY, EXPRESS OR IMPLIED, AS TO DESCRIPTION, QUALITY, MERCHANTABILITY, and FITNESS FOR A PARTICULAR PURPOSE, OR ANY OTHER MATTER IS GIVEN BY SELLER OR SELLER'S AGENT IN CONNECTION HEREWITH. UNDER NO CIRCUMSTANCES SHALL SELLER OR SELLER'S AGENT BE LIABLE FOR LOSS OF PROFITS OR ANY OTHER DIRECT OR INDIRECT COSTS, EXPENSES, LOSSES OR DAMAGES ARISING OUT OF DEFECTS IN OR FAILURE OF THE EQUIPMENT OR ANY PART THEREOF.

WHAT TO DO IF THERE IS A QUESTION REGARDING WARRANTY

If a machine is purchased through an authorized AMF Reece, Inc. distributor, warranty questions should be first directed to that distributor. However, the satisfaction and goodwill of our customers are of primary concern to AMF Reece, Inc. In the event that a warranty matter is not handled to your satisfaction, please contact the appropriate AMF Reece office:

Europe
Prostejov, Czech Republic
Phone: (+420) 582-309-286
Fax: (+420) 582-360-608
e-mail: service@amfreece.cz

TABLE OF CONTENTS

A-INTRODUCTION
1. Introduction 1-1
2. Specifications 1-2
3. Safety of work 1-3
4. Security of the operator and maintenance 1-4
5. List of the safety labels and devices 1-6
6. Position of the labels and the safety devices 1-7

B - MACHINE INSTALLATION
1. Content of the shipping box 1-8
2. Accessories. 1-8
3. Machine unpacking and assembling 1-9
4. Adjustment of the T - Belt tension for sewing 1-12
5. Adjustment of the left T - belt tension 1-13
6. Thread stand installation. 1-14

C - OPERATOR INSTRUCTIONS
1. Preparing to Sew 1-15
2. Needle Installation 1-16
3. Threading 1-16

D - MACHINE ADJUSTMENTS
1. Stitches density adjustment 1-19
2. Adjustment of the stitches density in the eye 1-22
3. Adjustment of the stitches density in cross bar 1-22
4. Lengths of the sewing 1-23
5. Change of the buttonhole shape - change of the lateral cam 1-24
6. Change of the width bite 1-25
7. Principles of sewing 1-28
8. Bed plate alignment 1-34
9. Testing the cam position 1-34
10. Turning mechanism 1-35
11. Stopping mechanism 1-37
12. Setting - up the mechanism for fabric clamping 1-39
13. Clamp plate spreading 1-40
14. Length setting - up of the second buttonhole row 1-41
15. Eye shape control 1-41
16. Needle bar height 1-42
17. Clearance Between the Looper and the Needle 1-43
18. Spreaders adjustment 1-44
19. Loopers movement 1-45

e - mail service @amfreece.cz, parts @amfreece.cz, website: www.amfreece.com
Phones: +420 582 309 146 (service), +420 582 309 286 (spare parts), Fax +420 582 360 606

TABLE OF CONTENTS

20. Setting - up of the spreaders movement 1-48
21. Cutting lever and anvil 1-49
22. Knife and Cutting Steel change 1-50
23. Cutting space modification 1-52
24. Cut Before and Cut After 1-53
25. Knife adjustment for upper thread trim 1-54
26. Thread draw off mechanism 1-56

E - ROUND EYE ADJUSTMENTS
1. Introduction 1-57
2. Different position of the machine mechanisms 1-57
3. Stop motion control 1-58
4. Round Eye Machine Eyelet Diameter or Cutting Space Change 1-59
5. Clamp feet using for correct buttonhole sewing 1-59
6. Adjustment of the supplied accessories 1-60

F - MACHINE ADJUSTMENT - CROSS BAR
1. Introduction. 1-61
2. Different position of the machine mechanisms 1-61
3. Cross bar relationship to the first and second row of the stitches 1-61
4. Device for sewing the cross bar 1-62
5. Readjustment of the cross bar machine to machine without bar 1-64
6. Readjustment of the cross bar machine to the fly bar machine 1-64
7. Hand feeding 1-64
8. Cross bar length adjustment 1-65
9. Correction of the cross bar position in axis X 1-66
10. Cam assembly installation 1-66
11. Change of the machine rotation 1-67

G - MACHINE MAINTENANCE
1. Cleaning and maintenance the machine 1-68
2. Periodic maintenance 1-69
3. Machine lubrication 1-70
4. Machine disposal 1-71

H - DOCUMENTATION
1. Electrical diagrams 1-72

1. INTRODUCTION

The ***S100-030/031/032*** (AF-CB/CA-RE) is a versatile two thread chain stitch sewing machine for sewing buttonholes with possibility to insert the gimp. The regular eye, Cut Before / Cut After, adjustable flybar machine may be used for suits, jeans and a wide variety of sewing applications.

The ***S 100-052/053*** (RE) is two threads, pertinently one thread machine, which is sewing round chain stitch buttonhole. It is used for sewing decorative buttonholes, for example on the hoods or hats.

The ***S 100-060*** (CRB) is two threads machine with chain stitch and opportunity insert the gimp for sewing buttonholes with cross bar and flybar. It allows sewing by one chain thread stitch, which is suitable for smaller highlighting of the stitches above the fabric (smaller plasticity).

The size of the buttonhole (with eye or without eye) and type of the buttonhole end (open end, flybar or cross bar) are ensured by changeable cams.
The semiautomatic lubrication system uses drip oil wicks to lubricate the critical machine areas.
To prevent machine damage, it is possible to check the level of oil in the visibly placed oil sight gauge .

Machine models:

S100 - 030 /031/032	AF-CB/CA-RE
S100 - 030	for standard sewing
S100 - 031	for jeans sewing
S100 - 032	for textilie sewing
S100 - 052	RE (Small eye)
S100 - 053	RE (Large eye)
S100 - 060	CRB

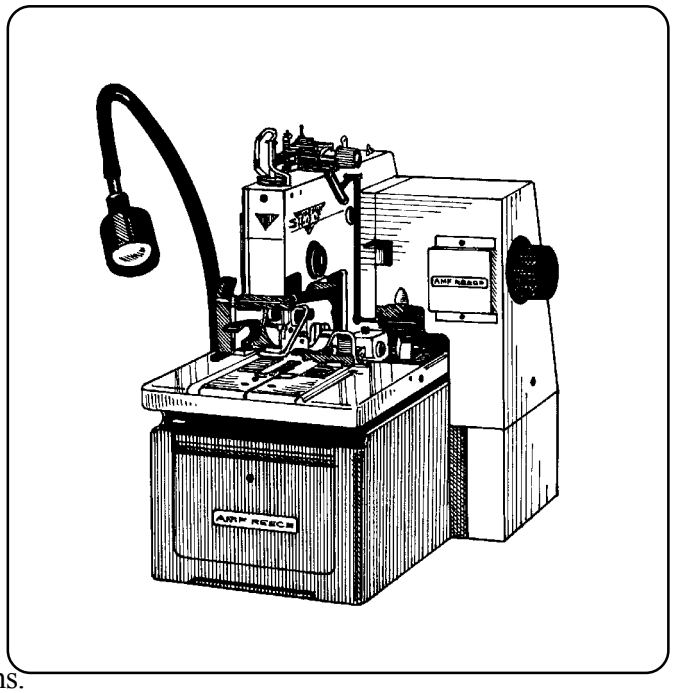

Note:

AF - Adjustable Flybar
CB - Cutting Before
CA - Cutting After
CRB - Cross Bar
RE - Round Eye

All these machines have cut upper thread mechanisms.

2. SPECIFICATIONS

Machine Type	S100 - 030	S100 - 033	S100 - 035	S100 - 036	S100 - 060	S100 - 052	S100 - 053
Description	Eyelet Buttonhole Machine				Eyelet buttonhole machine for sewing the buttonholes with the cross bar and flybar	Eyelet buttonhole machine for sewing the regular eye buttonholes	
Buttonhole style							
Sewing speed	1768 ± 5% stitches/min				1450 ± 5% stitches/min	1768 ± 5% stitches/min	
Buttonhole Length	10 - 38 mm (0.4 - 1.5") without upper thread trimming, 10 - 32 mm (0.4 - 1.26") with upper thread trimming				13-32 mm	-	
Stitch Density	8 -16 stitches /cm						
Bite Range	2 - 4 mm						
Cord Trim ✂	-	yes			-	-	
Eye Type	without eye, 2.2 x 3.0 mm (0.086 x 0.118"); 3.2 x 5.0 mm (0.126 x 0.197")					∅ 2.5; 3; 3.5; 4	∅ 3.5; 4; 5; 6; 7
Flybar Length	standard 6 mm (possible range 3.0 - 7.0 mm)					-	
Flybar Density	8 6 - 16 stitches / cm					-	
Number of stitches in the eye	8 - 16 stitches/cm						
Cross Bar Length	-				4 - 8 mm	-	
Cross Bar Density	-				8 - 16 stitches / cm	-	
Clamp Foot Height	10 mm (0.4")						
Maximum work thickness	max 6 mm (1/4")						
Buttonhole Cutting Mode	standard cutting after (CA), possible setting cutting before (CB)						
Cutting Space	standard 0.5 - 0.7 (minimum 0.1; maximum 1.4)					-	
Needle system	02.0501.0.111 (1807 D Nm 100 - standard)						
	02.0503.3.113 (1807 D Nm 110-130 - thick fabric)						
* Recommended threads	Size 80,100,120						
Operating Conditions	according to IEC 364-5-51 temperature from +5° to 40°C, relative air humidity from 30 to 80 %						
Air Pressure	-	5.6 bar (80 psi)			-	-	
Machine db Level	from 75 to 81 dB at max. speed						
Machine Head Dimension	600 mm (23.6") - height x 465 mm (18") - length x 530 mm (21") - width						
Machine Head Weight	64 kg (143 lb)				66 kg	64 kg (143 lb)	
Table Dimension	780 mm (31") - height x 1100 mm (43") - length x 600 mm (23.6") - width						
Machine Weight	149 kg				151 kg	149 kg	
Electrical Requirements	1NPE~60Hz 110V/TN/S ; 3NPE~60Hz 230V/TN/S ; 1NPE~50Hz 230V/TN/S ; 3NPE~50Hz 400V/TN/S						

Note: If a customer uses thread size 100 and less, the manufacturer recommends to use the left looper 17.0069.4.019

e-mail: service@amfreece.cz ; parts@amfreece.cz; website: www.amfreece.com
Phones: +420 582 309 146 (Service), +420 582 309 286 (Spare Parts); Fax: +420 582 360 606

3. INSTRUCTION FOR SAFETY OF WORK

The sewing machine S -100 is designed and produced to be highly reliable. Special attention is given for securing of the service simplicity and effective safety protection of the operators and machine maintenance.

The machine S -100 has safety appliance which protects operator but also machine and respects valid safety and hygienic rules for usual technological using of the machine. These safety appliances include plug of supply, operating switch (circuit breaker) and covers.

There are safety labels placed on the machine for warning for supplementary danger. Do not remove and damage these labels. When the label is damaged, order the new one. The said precautions can not cover all safety aspects that is why operator before using of the machine has to read and understand to this instructions. The mistakes will be eliminated during machine installation and during its own operation. Do not try to put the machine into operation without reading all the machine instructions and until well understanding to every function and progress.

There are three types of safety direction in these instructions:

DANGER! Possible loss of life.

WARNING! Possible serious injury or machine damage.

NOTICE! Possible injury or machine damage.

It is recommended to service workers from AMF Reece oversaw to the installation and initial training of mechanics and operators.
Strictly given safety program, which part is the direction for safety operation, is the most effective security of the workers safety during the operating with the machine. The secure work with the machine is ensured by the safety covers which are useful, if they are mounted and fixed correctly. The warning labels and service must be done according to the instructions. Operators and service workers should wear safety goggles.

4. INSTRUCTIONS FOR THE SECURITY OF THE OPERATOR AND MAINTENANCE

When the machine is set to the working area, it is recommended to keep the minimal distance said in the drawing.

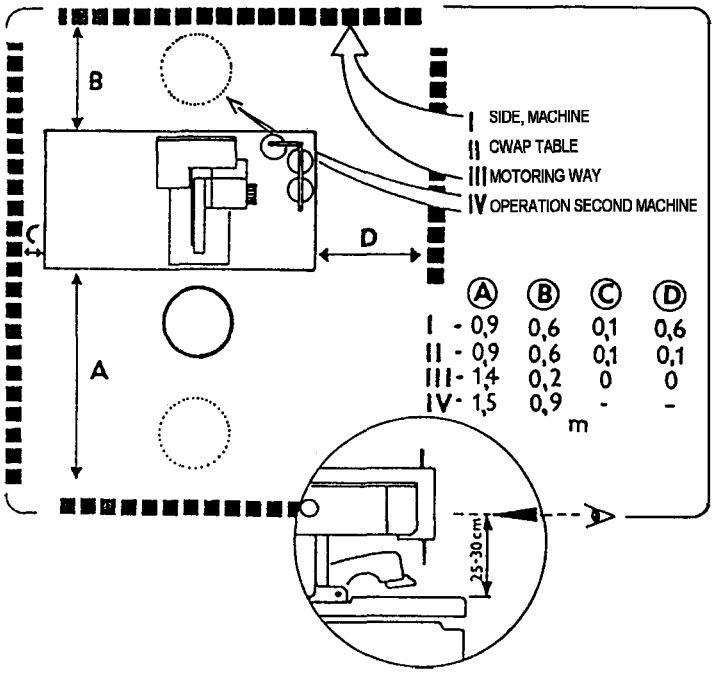

DANGER!

- Before machine connection to the power make sure, whether all safety covers are mounted.
- If it is necessary to remove some safety covers, switch off the operating switch (circuit breaker) and disconnect the machine by the fork of supply from the socket.
- Do not connect the machine to the power if some cover is removed.

WARNING!

- Remember the position of the operating switch (circuit breaker) so that is possible use it from the arbitrary position.
- Make sure, whether supply of energy and its dimensioning and safeguarding allows permanent supply of energy needed for dependable output of the machine.
- Do not forget to persuade yourself before fork connection to the socket whether both switches on the machine are switched off.
- Check if the electrical cables are not damaged, so that be touch with uncovered conductor, can not occur any injury.
- Check regularly if the safety covers are correctly mounted and whether they are not damaged.
- When the covers are demaged, repair or replace them immediately for the new ones.
- Do not switch the machine on without covers.
- Do not touch rotary shafts by hands.
- In any circumstance, do not put hands to the needle space.

Revised 10/2005
e-mail: service@amfreece.cz ; parts@amfreece.cz; website: www.amfreece.com
Phones: +420 582 309 146 (Service), +420 582 309 286 (Spare Parts); Fax: +420 582 360 606

- Before changing the needle, switch off the operating switch (circuit breaker).
- In case when the operator will not work on the machine, disconnect the power supply by removing the plug from the socket.
- Before cleaning or any maintenance work on the machine, disconnect the power supply by removing the plug from the socket.
- Do not adjust the machine in any way, which could endanger its safety.
- Every part of the machine can be dangerous, if there is incorrect manipulation or faulty maintenance with the machine That is why everybody, who will manipulate, maintain or operate with this machine must be acquainted with informations included in this manual.

CAUTION!

- Perform all regular service as described by this manual.
- If there is any problem with power supply, turn off the mine power switch (circuit breaker).
- Do not remove, paint over, damage or any way change safety labels. If a safety labels are lost or cannot be easily read, order the new one in our factory and place them on the original place.
- Long hair and loose clothing may be dangerous near any machinery. Always contain long hair and avoid loose clothing, so that it cannot be caught by machinery and cause injury.
- Never use this machine while under the influence of drugs or alcohol.
- If anything seems to be operating incorrectly in the machine call for maintenance assistance immediately.
- Be sure that there is adequate light for safe operation. A normal minimum light level is 750 Lux.

5. LIST OF THE SAFETY LABELS AND DEVICES

❶

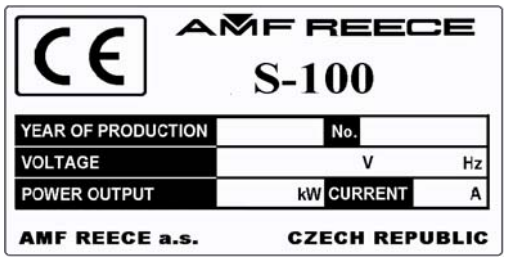

❷

0.45 - 0.50 MPa

❸



❹



❺



❻

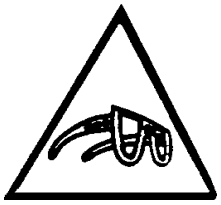

❶ Standard label.
❷ Marking of the air pressure (just for S 100 - 033, S 100 - 035 and S 100 - 036).
❸ Rotational direction (located on the right cover, left side of the rear cover, motor).
❹ Warning by the cover removing (front cover of the frame, right cover of the drive, rear folding cover, motor cover).
❺ Label of the safety conductor clip.
❻ Necessity of the safety goggles using (sewing head front part, above the needle).
❼ External covers of the machine folding or dismantling by the tools.
❽ Guard of the upper end of the needle bar.
❾ Fixed guard of the needle area.
❿ Folding transparent eye guard - in front of the needle area.
⓫ Axis of the tilting head located irregularly to the driving axis. This solution ensure withdrawing of the belts from the driving pulleys for lifting of the head for cleaning and maintenance work . When the motor is switched on, the mechanisms of the sewing head will not move.
⓬ Folding front cover, which precludes the fingers inserting between the moving working board and the fixed frame.

Revised 10/2005
e-mail: service@amfreece.cz ; parts@amfreece.cz; website: www.amfreece.com
Phones: +420 582 309 146 (Service), +420 582 309 286 (Spare Parts); Fax: +420 582 360 606

6. POSITION OF THE LABELS AND THE SAFETY DEVICES

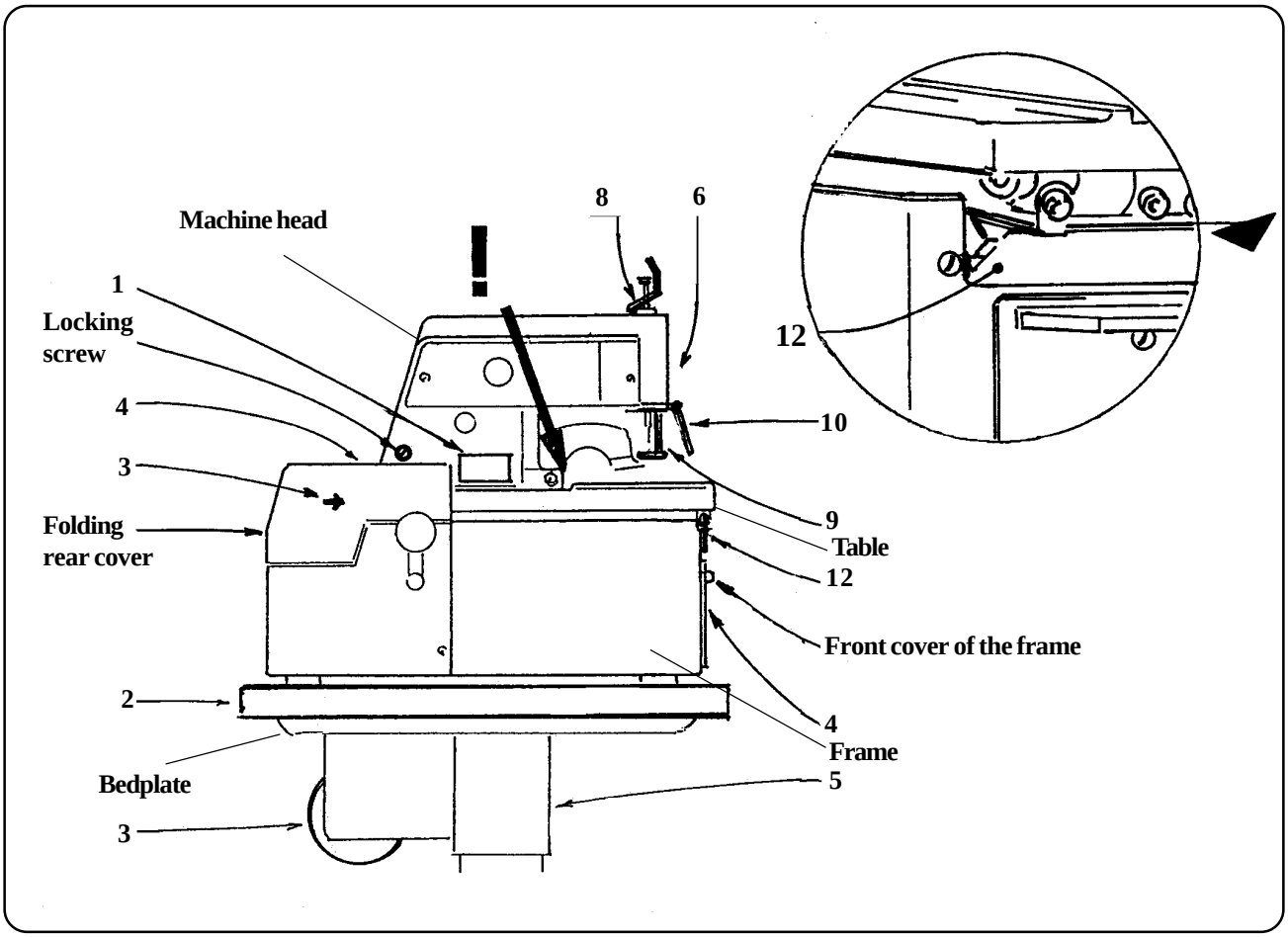

WARNING! When the machine works, it is not disabled to give the fingers to the space between the machine table and machine head in marked place. When the working board moves, the clearance in this place is about 50 mm. If fingers are accidentally put into this place, it can occur very serious injury.

Front cover of the frame and lock screw of the folding rear cover, which disable tilting of the rear cover, are dismantled during transport. It is necessary to install these safety parts to the machine before the machine is switched on.

CAUTION! If it is necessary to lift the head out of the home position, it is necessary to tilt the folding front cover to the operator side, then put the head back. If this process is not kept, and the machine is switched on, the cover will be damaged.

1. CONTENT OF THE SHIPPING BOX

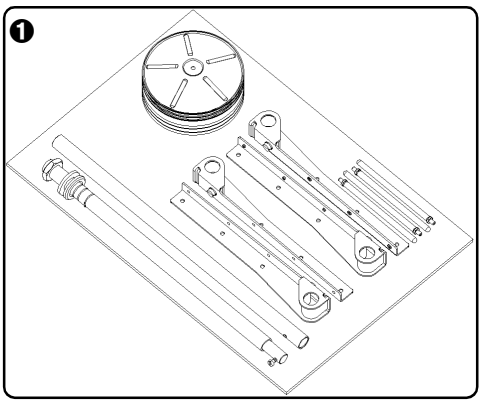

1. The delivery usually contains two boxes. One box contains the table and wiring, second the head of machine.

2. The box contain also carton with accessories and operation instruction with spare parts manual and the thread stand ❶.

3. When unpacking the delivery, follow labels which are on the cover.

CAUTION! If the delivery was damaged during the transport, inform the carrier. Check the contains of the delivery with order. In case that there are some faults, immediately inform the manufacturer - later complains will not be taken into consideration!

2. ACCESSORIES

Free accessories are supplied with the machine- the list is mentioned in this manual.

S100 - 030	- accessories 030 (standard) - see 3-32 and it is possible to order 031, 032
S100 - 031	- accessories 031 (jeans) - see 3-34 and it is possible to order 030, 032
S100 - 032	- accessories 032 (textile) - see 3-36 and it is possible to order 030, 031
S100 - 052	- accessories Round Eye (Small) - see 3-52
S100 - 053	- accessories Round Eye (Large) - see 3-54
S100 - 060	- accessories CRB- see 3 - 67

Revised 10/2005
e-mail: service@amfreece.cz ; parts@amfreece.cz; website: www.amfreece.com
Phones: +420 582 309 146 (Service), +420 582 309 286 (Spare Parts); Fax: +420 582 360 606

3. MACHINE UNPACKING AND ASSEMBLING

1. After unpacking it is necessary to put the table together according to the enclosed documentation. Delivered table is standardly took apart. For connection of the table frame, use enclosed connecting parts. For ensuring of the conductive connection among all metal parts of the table is necessary to put fan washers under the one of the two neighboring screws.

WARNING! Integrity of the protective connection of the machine metal parts must be kept according to the section DOCUMENTATION - Wiring diagrams.

CAUTION! The wiring assembly can perform only the person, who has an appropriate electrical qualification.

2. After putting the table together and wiring the assembly - before motor cover mounting, install the table to the given place. Its stability is ensured by the rear abutment, which is controlled by the manual screw.

3. Before next assemblies of the machine, it is necessary to control if the motor turns in right direction, it is marked **S** on drawing. The plug of supply, which is used as a main switch, put into the socket. When the operational switch (circuit breaker) is switched on, activate the motor to run by the foot pedal. Check the right rotational direction of the pulley according to the arrow placed on the motor. Incorrect rotational direction of the electric motor can cause machine damage.

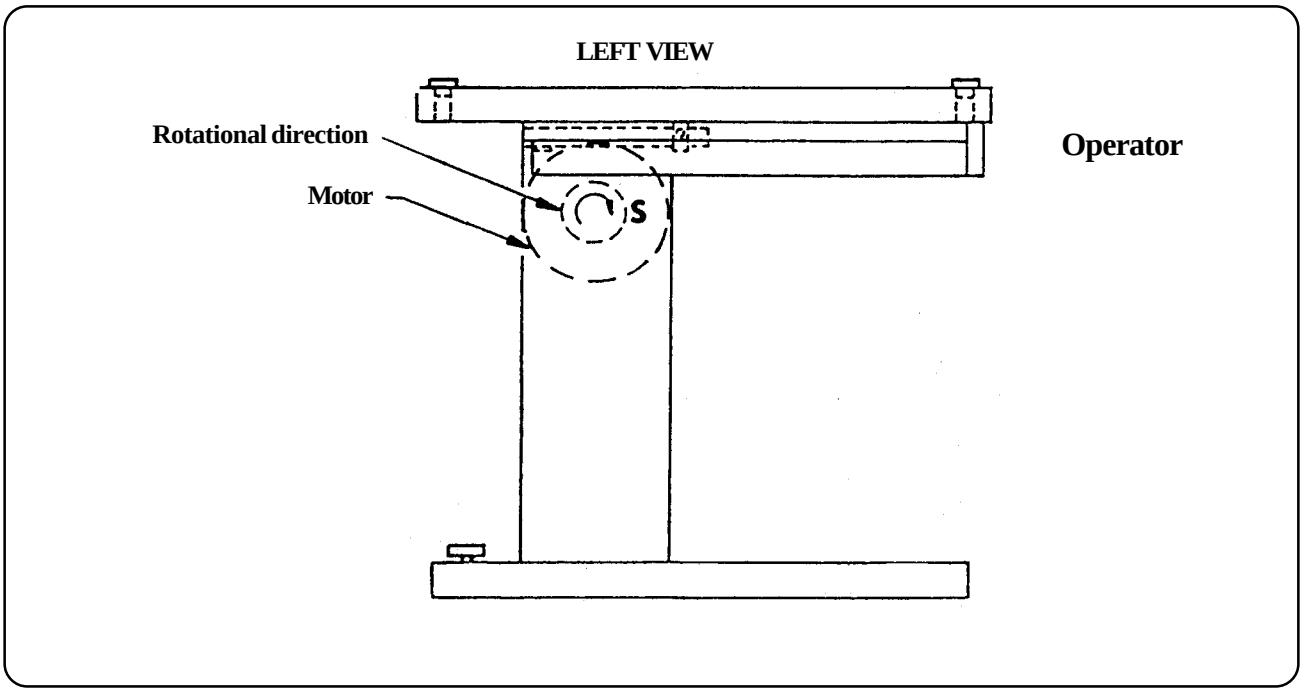

WARNING! It is commended to use original table, part number 04.90.17.0.xxx, for delivered machine. If the user has to use another table, producer can not take the responsibility for possible troubles. In this case it is necessary to use such equipment, which allows to reach on the left driving pulley for the machine cycle max. 250 rev./min. and on the right pulley for sewing drive max 875 rev./min. Higher revolution can cause serious machine damage! The socket for plug of power supply has to comply with requirements of norm IEC 364-4-41.

4. Insert tall rubber washers from the accessories to the four holes on the table board.

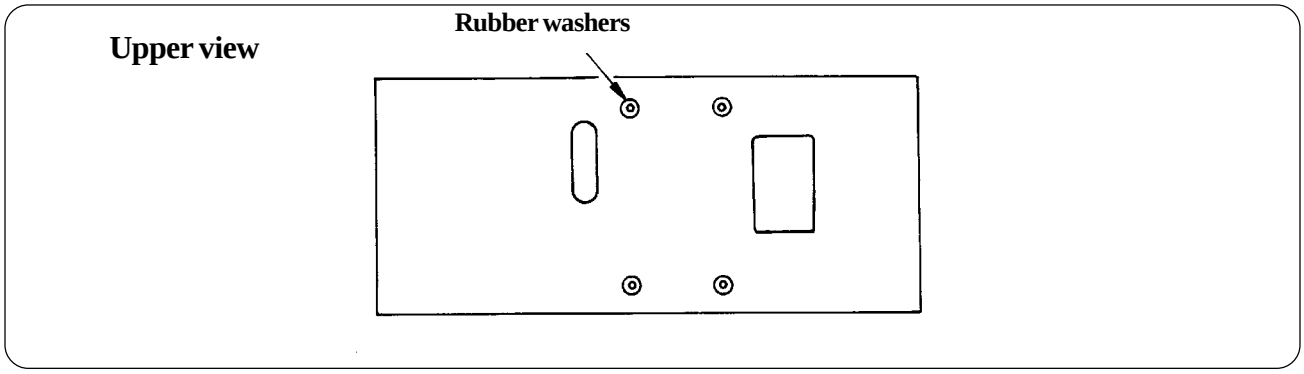

5. When the head from the cover is taken out, clean the head from the preservative grease. To catch the machine during the manipulation, use slots in front and back of the machine frame.

6. The removed machine head place on the installed rubber washers and according to the drawing fix it by the screws, washers and rubber washers to the table.

CAUTION! Do not take the machine head in the machine table!

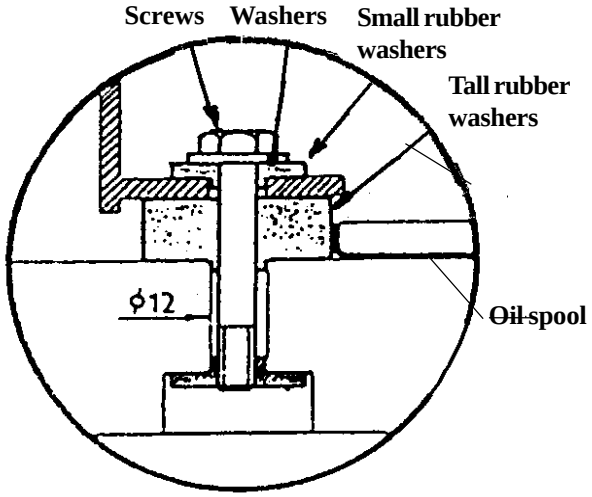

Revised 10/2005
e-mail: service@amfreece.cz ; parts@amfreece.cz; website: www.amfreece.com
Phones: +420 582 309 146 (Service), +420 582 309 286 (Spare Parts); Fax: +420 582 360 606

7. Fold the rear covers and tilt the head in the frame, make rear screws accessible during the assembly. Since some deliveries can have the covers partly dismantled, fix them to their place by using drawings in parts manual. All safety covers must be assembled according to the section: INTRODUCTION - Position of labels and safety equipment.

8. Oil reservoir should be placed between installed tall rubber washers.

9. The installation of the right driving belt (longer) is done by loosening the screw of the right cover and its removal.

10. If the left drive belt is not put on the upper pulley of the head (tilting the rear cover to have the access to this belt), after loosening the inner screw of the frame, it is necessary to make adequate space between the gear of the hand drive and the gear of the rear shaft by tilting the frame.

11. After belt installation, tighten the frame inner screw again so that both gears fit in, use the hand wheel.
If the belts are correctly mounted, they will not touch the covers or bedplate.

CAUTION! After installing the belts, install the motor cover. It is necessary to connect the cover, machine head and motor by the protective circuit breaker.

12. Before operating the machine, install the clip ❶ and the screw ❷ from the accessories on the rear cover.

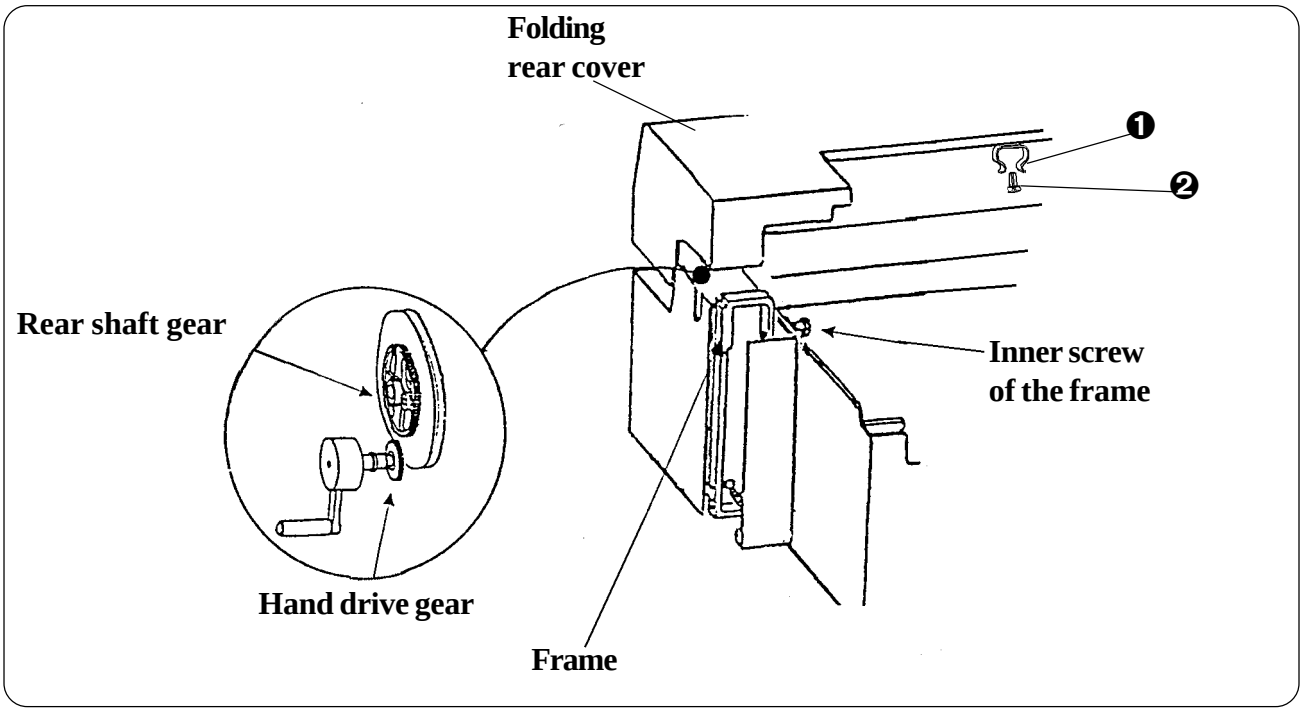

4. ADJUSTMENT OF THE T - BELT TENSION FOR SEWING

The driving belt is placed under the right side cover. After its dismantling, loosen the pulley screw and adjust the V - belt pulley so that, so that during pushing on the front branch of the belt, there should be a sag about 25 mm (1"), as illustrated. Tighten the screw of the idler pulley.
For easy folding of the machine head, the pulley must be down with tilt min. 30° backwards.
Install the removed cover again.

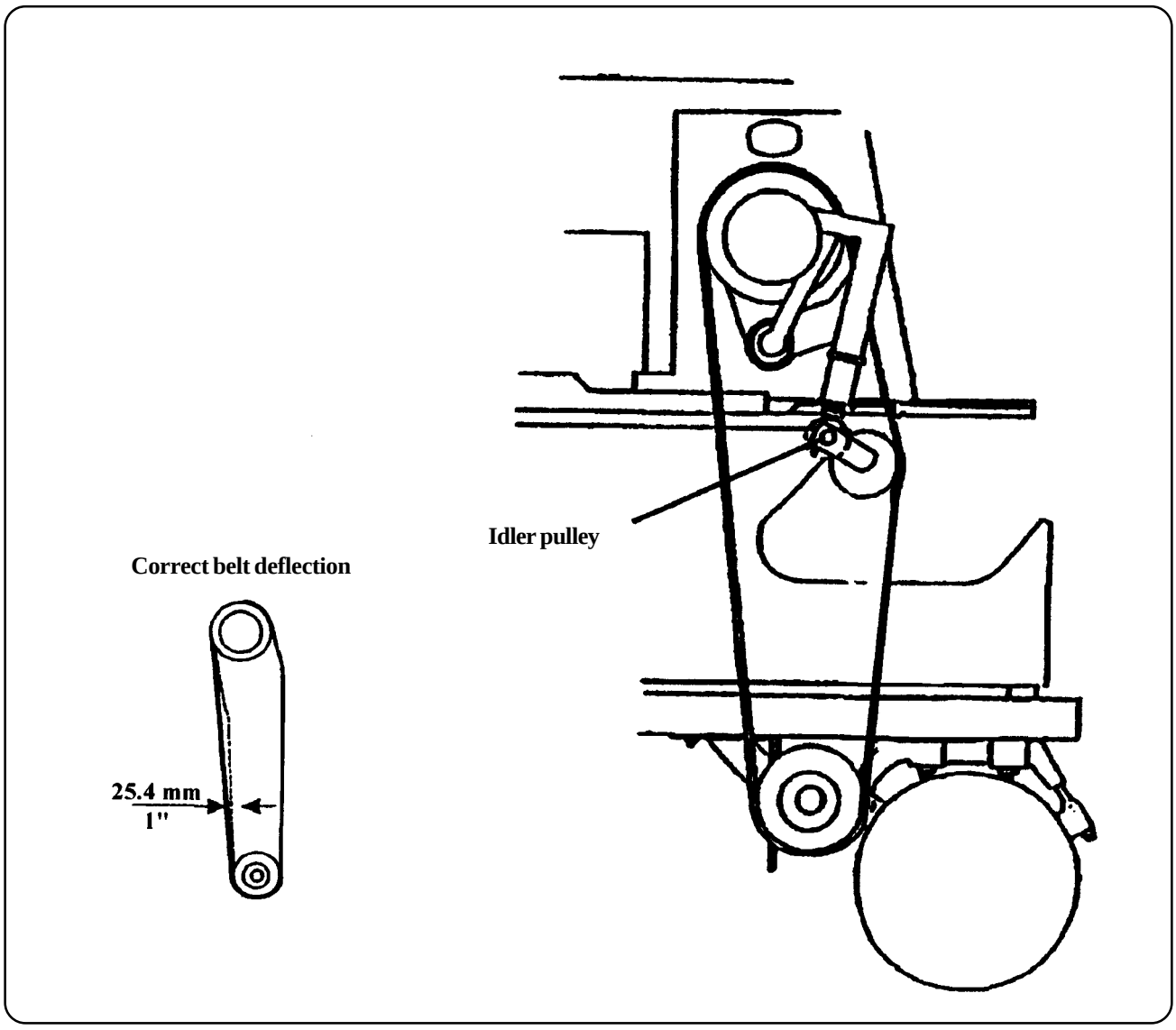

Revised 10/2005
e-mail: service@amfreece.cz ; parts@amfreece.cz; website: www.amfreece.com
Phones: +420 582 309 146 (Service), +420 582 309 286 (Spare Parts); Fax: +420 582 360 606

5. ADJUSTMENT OF THE LEFT T-BELT TENSION

1. The access to the belt will be obtained after folding of the folding rear cover.

2. Then adjust the idler pulley until 13 mm, (1/2") of flex is obtained in the belt, as illustrated.

3. Tighten the idler pulley locking screws.

4. Install the motor covers and set the belt stud, which is fixed on the motor cover to the distance 3 mm, (1/8") below the pulley. This belt stud will prevent dropping of the belt when the machine head is lifted.

5. Install the removed covers again.

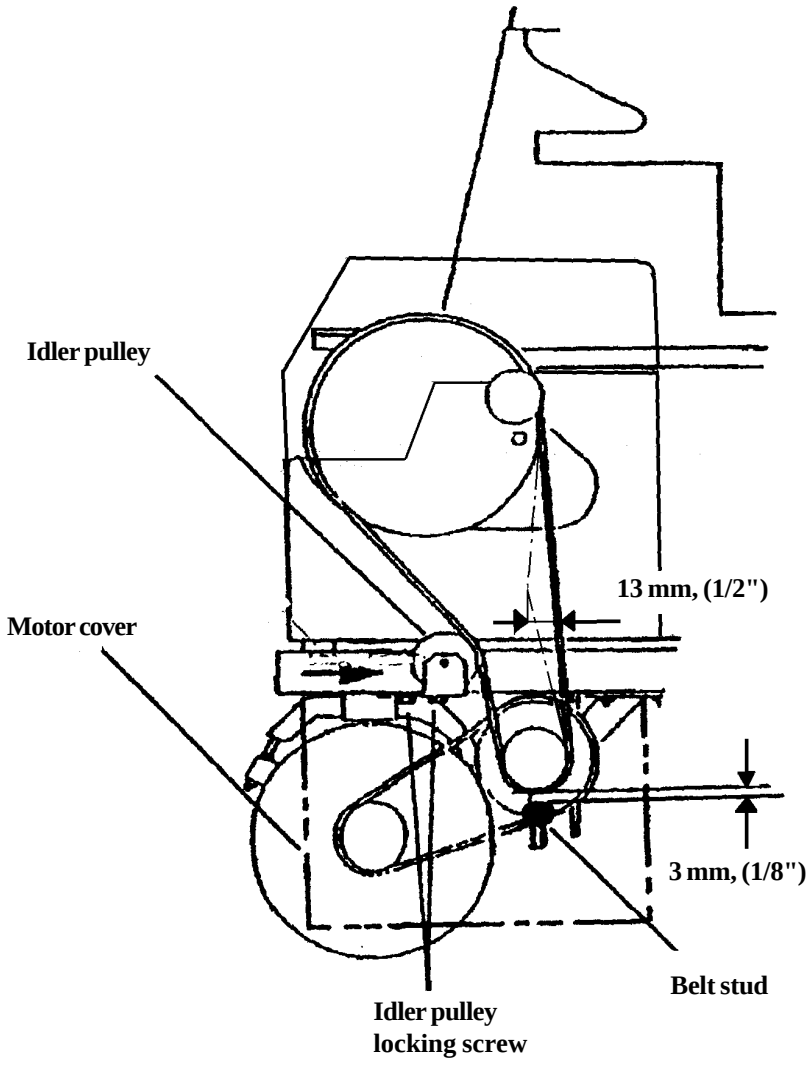

6. THREAD STAND INSTALLATION

1. Put the thread stand together according to the drawing.

2. Position of the locking ring ❶ allows assembly of the thread stand for various thickness of the table top. Threaded end of the post ❻ must not extend more that 1 mm (1/32) through the locking nut ❺.

3. Adjust the ring ❶, insert the washer ❷ and the post into the hole provided in the right rear of the table top ❸. Insert the washer ❹ and tighten the nut ❺.

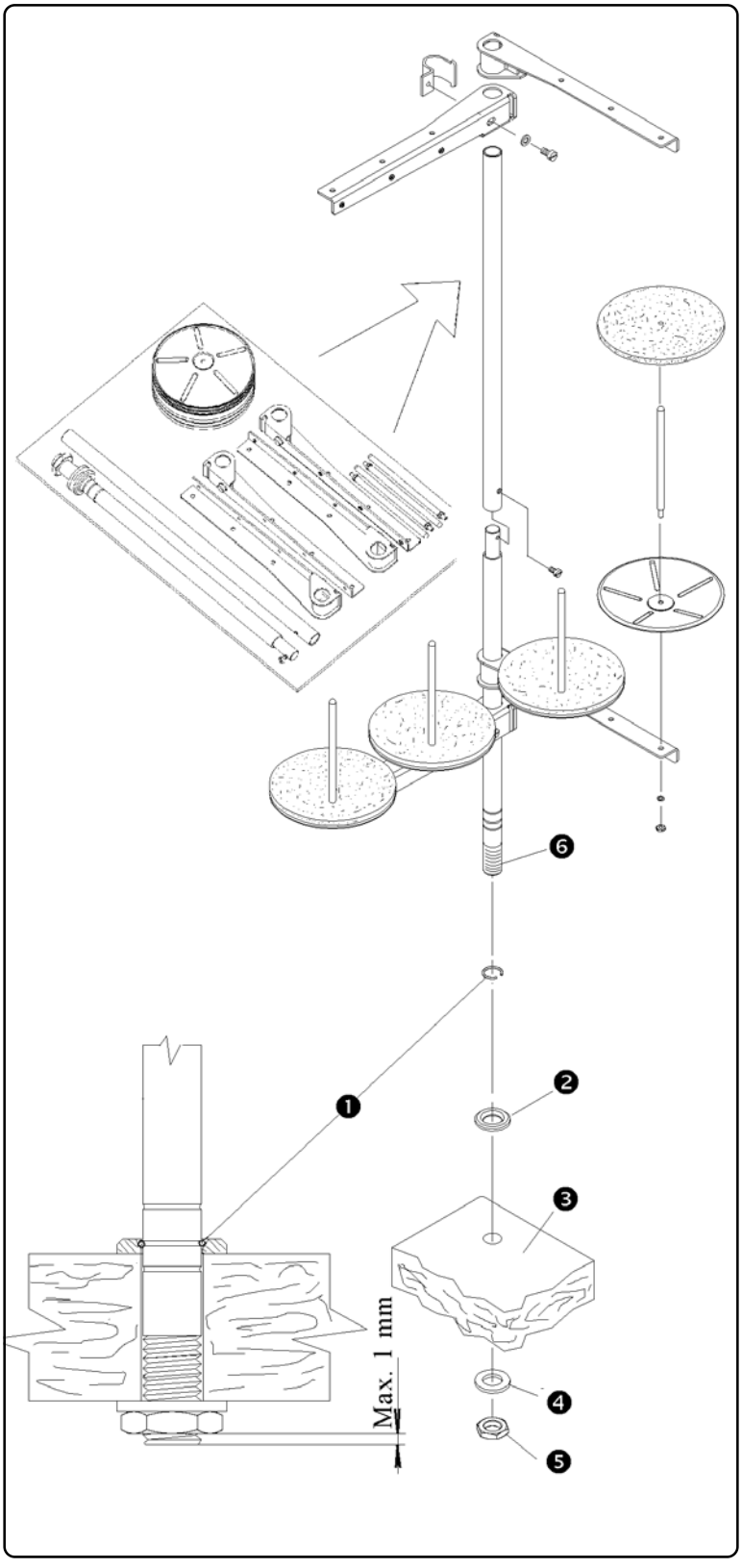

Revised 10/2005
e-mail: service@amfreece.cz ; parts@amfreece.cz; website: www.amfreece.com
Phones: +420 582 309 146 (Service), +420 582 309 286 (Spare Parts); Fax: +420 582 360 606

C - OPERATOR INSTRUCTIONS

1. PREPARING TO SEW

1. Read through all safety instructions and ensure all covers are installed.
2. ***Only Cord Trim*** - Check on the air pressure regulator that pressure is in range 4.5 - 5 bars (0.45 - 0.50 MPa), see note above the regulator.
3. Give oil to the manual oiling points and check the correct oil quantity in oil level indicator.
4. Check the needle and gimp threads are correctly threaded.
5. Before the first sewing, insert piece of fabric similar to sewing work under the clamp feet.
6. Insert the input cable into socket and by switching on of the operating switch (circuit breaker) ❶ switch the motor on.
7. Drive of the machine is activated by the table foot pedal ❷.

CAUTION! To make sure the machine is sewing correctly, it is recommended to sew a few buttonholes on a scrap piece of material before sewing on a quality garment.

8. Insert the material under the clamp feet.
9. To lower the clamp feet ❸, move the lever ❽ forward.
10. Press the starting lever ❹, the clamp feet are automatically lowered. After the buttonhole is sewn and cut, the clamp feet are raised.
11. If the emergency stop button ❺ is pressed and held during sewing, the clamp feet will not raise at the end of the sewing cycle and it is possible to sew the buttonhole again.
12. If it is necessary to interrupt the sewing cycle press the stop lever ❻. The machine will finish the cycle without sewing and the clamp foot will raise. (if the stop lever is pressed and then emergency stop is pressed ❺ the machine will finish the cycle without clamp raising. ***It is not valid for S 100 - CRB - see section G 7***.
13. To stop the machine immediately in any place of sewing cycle, press foot pedal (by heel down the sewing cycle is stopped, by toe the sewing cycle is started.
14. To start the sewing cycle without sewing, lift the lever ❼ and after the cycle is started, the machine makes cycle without sewing.

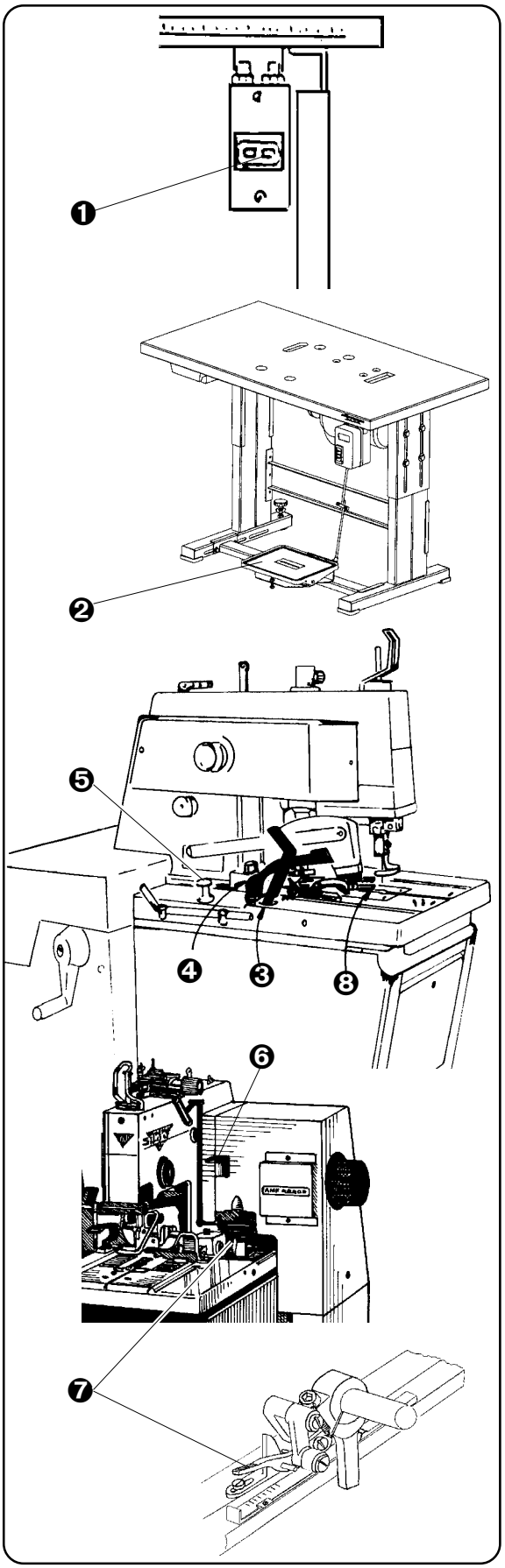

2. NEEDLE INSTALLATION

1. Loosen needle locking screw ❷ and dismantle the original needle.

2. Insert the new needle, so that the needle flat **A** is on opposite side from screw ❸ of the tension. Do not install a bent or broken needle. Roll the needle on a flat surface to check for straightens. The good quality needle does not have a deflection of the point.

3. Tighten the needle locking screw ❷ well.

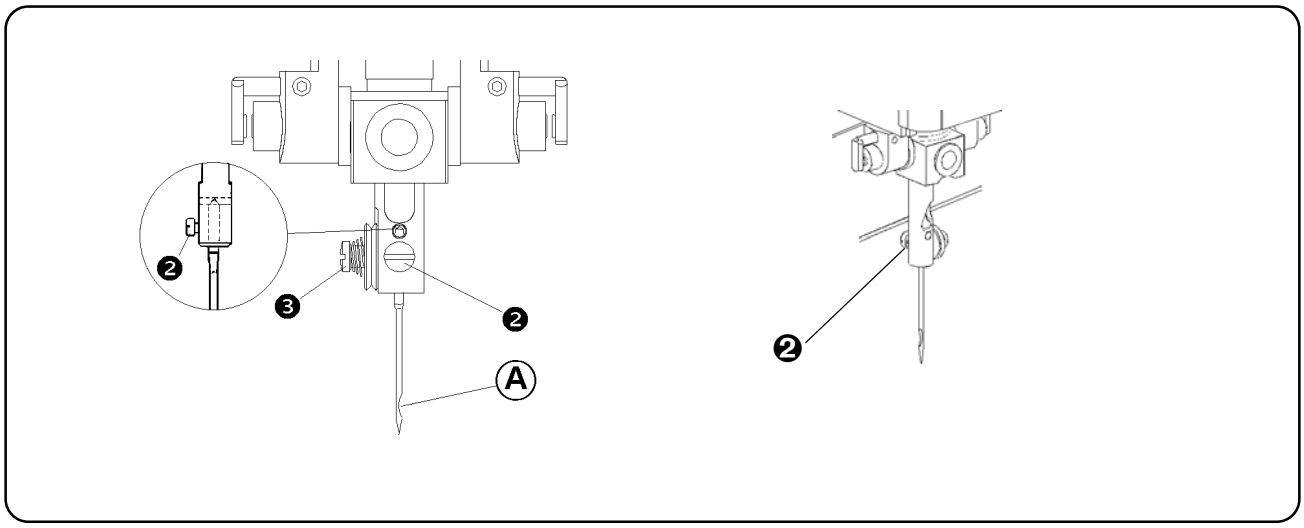

3. THREADING

WARNING! Check if the operating switch (circuit breaker) is switched off.

Thread the thread, as illustrated.

The appearance and quality of the buttonhole may be affected by one or more of the following

- stitches density
- used thread strength, colour
- thread elasticity
- used sewn material
- tension of upper and lower thread
- used thread thickness
- width of stitches
- choosen sewing thechnological procedure

Revised 10/2005
e-mail: service@amfreece.cz ; parts@amfreece.cz; website: www.amfreece.com
Phones: +420 582 309 146 (Service), +420 582 309 286 (Spare Parts); Fax: +420 582 360 606

Threading the gimp and upper thread to the machine - S 100-030/031/032/033/035/036/052/053

To change the upper thread tension, use the nut ❶.

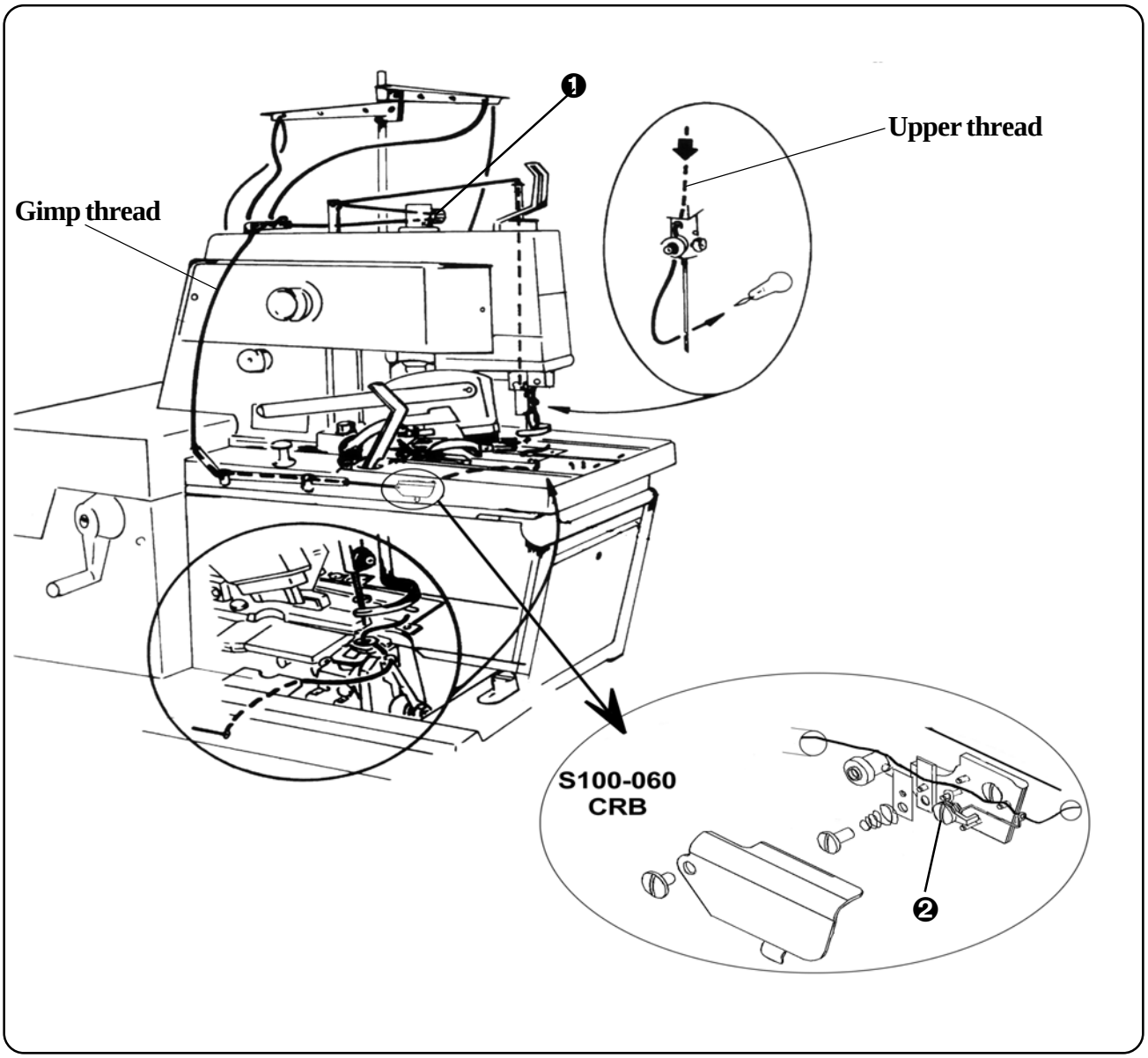

To adjust the gimp tension on the machine S 100 - 060 (CRB) use the screw ❷.

Lower thread

Use the manual nut ❶ to change the lower thread tension.

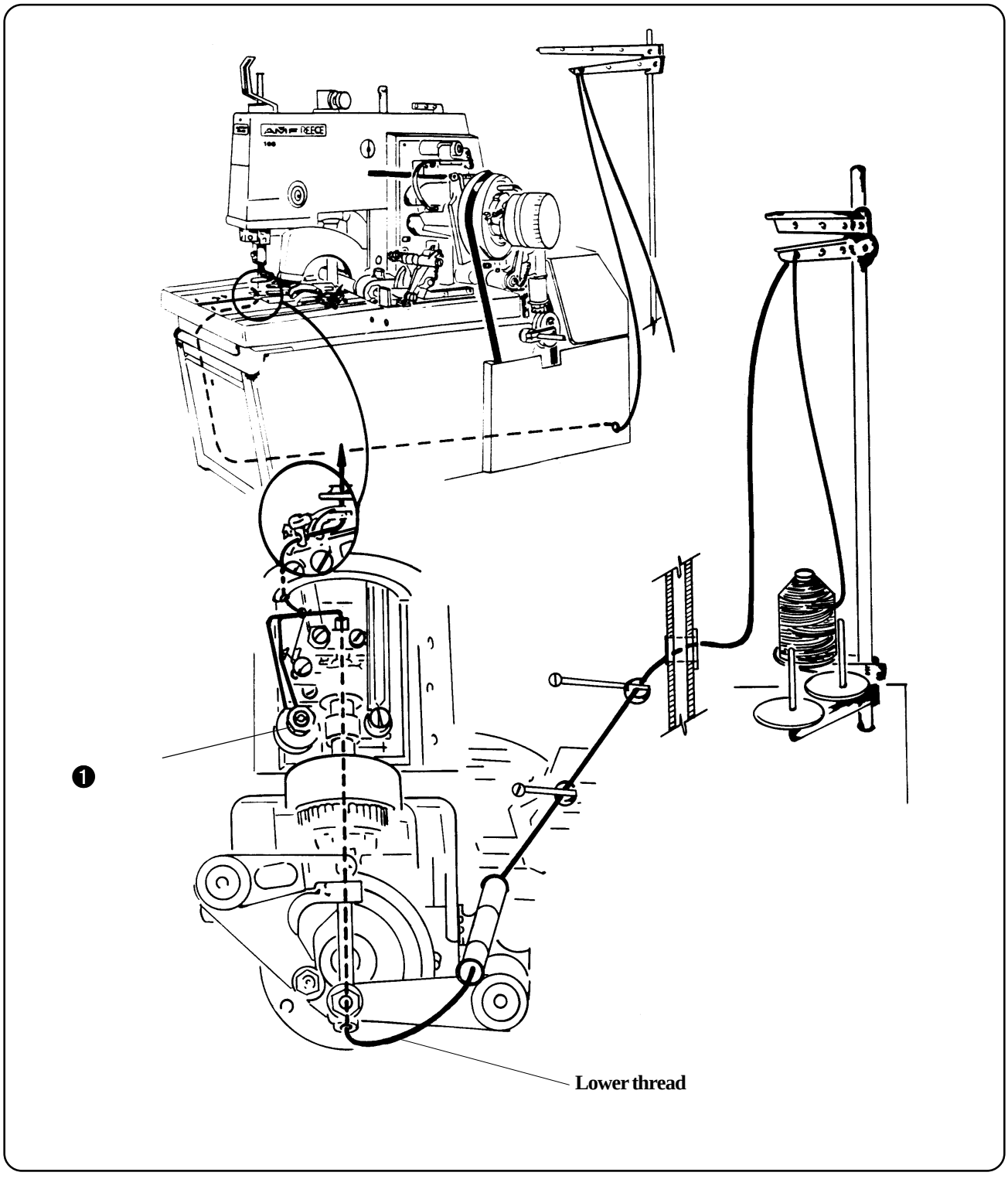

Revised 10/2005
e-mail: service@amfreece.cz ; parts@amfreece.cz; website: www.amfreece.com
Phones: +420 582 309 146 (Service), +420 582 309 286 (Spare Parts); Fax: +420 582 360 606

1. STITCHES DENSITY ADJUSTMENT - STRAIGHT SECTION

a) machine modification S 100 - 030/033/035/036/052/053

1. Remove auxiliary rear cover.
2. Loosen the stud nut ❶.
3. Shift the rod stud ❷ in direction **1** to increase the stitch density, in direction **2** to decrease stitch density.
4. Tighten the nut ❶.

Note: The limiter ❹ is installed on the lever ❸ . To obtain the stitch density 8-9 stitches/cm, shift the rod stud ❷ towards the limiter. To decrease the density, remove the limiter ❹.

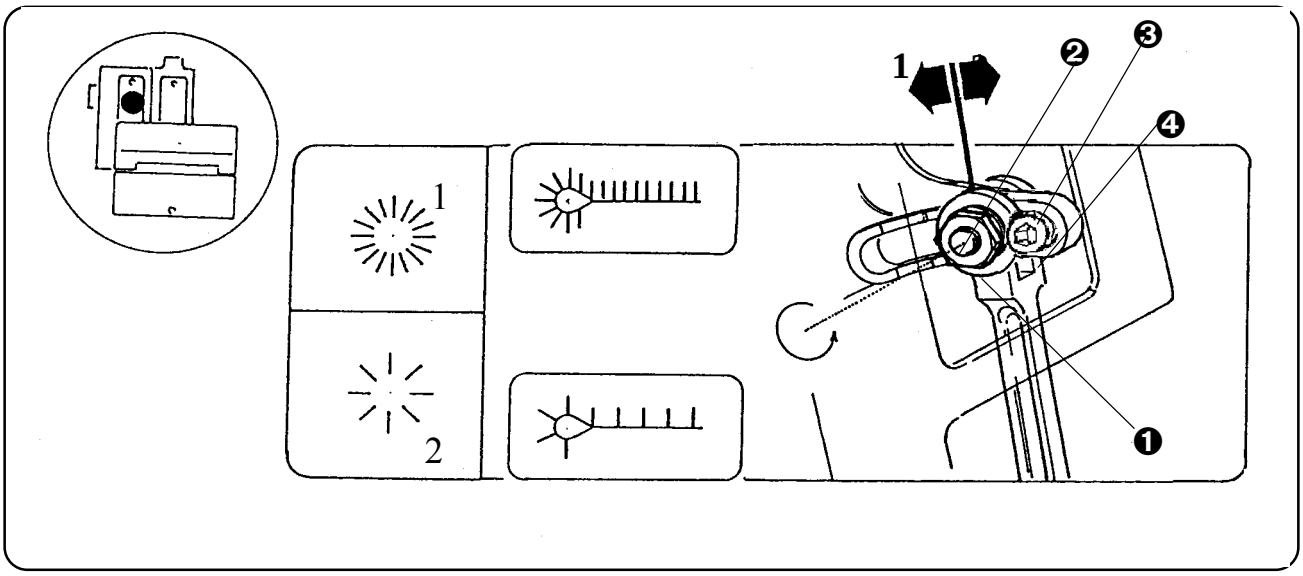

b) machine modification S 100 - 060

1. Fold the rear cover.
2. Start to sew the buttonhole, and stop the machine at the moment, when the lever ❻ is shored up to screw ❼.
3. Loosen the nut ❺ and shift the lever ❻ in the slot. To decrease the density move the lever up, to increase the density move the lever down.
4. Tighten the nut ❺.

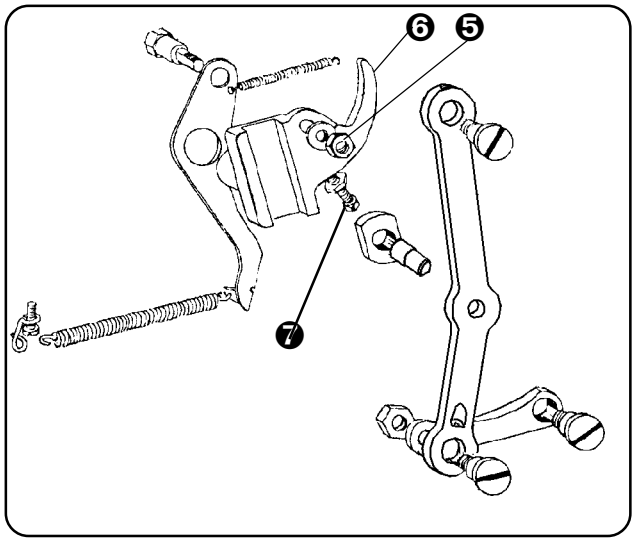

Warning : When the machine is used for long time, the stitch density can be changed because of the running of the main cam brake and main shaft brake. That is why it is necessary to adjust the brakes.

Adjusting main cam brake

The main cam brake controls the density of stitches which is adjust in chapter 2. It is a producer specification for setting the distance between stitches. Under normal use, the brake band will need to be adjusted again. The reason is to run in the brake band:

1. Loosen the locking nuts ❼.
2. By rotating the nuts ❼ is moving the brake band ❽ (in direction **4** to increase the break pressure, move the brake band in direction **3** to decrease the pressure).
3. Tighten the locking nuts ❼.

CAUTION! If the main cam brake pressure is excessively high, the machine may malfunction. The brake pressure is used for easy breaking of the main cam brake, so that the main cam brake is not moving itself by rotary inertia.

HELP: Adjust the stitch density according to the chapter 2 to require density with loosen the brake. Then lightly pull the brake, so that the number of stitches increase maximally to one stitch of length of the buttonhole. This will ensure correct function of the brake.

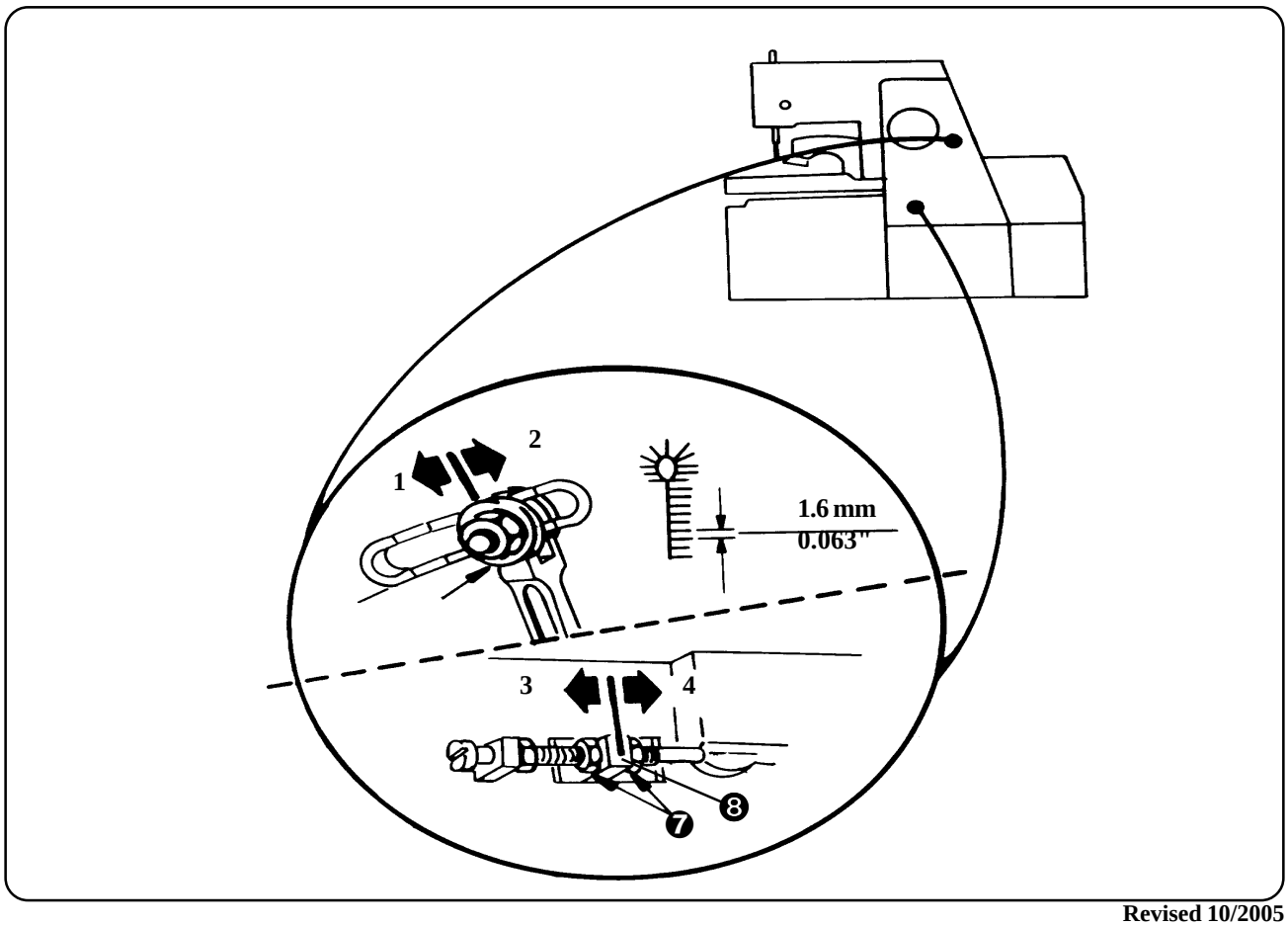

e-mail: service@amfreece.cz ; parts@amfreece.cz; website: www.amfreece.com
Phones: +420 582 309 146 (Service), +420 582 309 286 (Spare Parts); Fax: +420 582 360 606

Adjustment of the main shaft brake

The main shaft brake equalizes the stitch density of the buttonhole seam for the left and right-hand sides.

1. Loosen the locking nut ❾ of the adjustment screw ❿ in the main shaft brake ⓫.
2. Adjust the brake pressure to obtain equal stitch density between the stitches. Tighten the adjusting screw ❿. Rotating the adjusting screw clockwise, increases the brake pressure.

CAUTION! The main shaft brake is an auxiliary brake, used to obtain equalization of stitch density on the left and right-hand sides. If the main shaft brake pressure is excessively high, the machine components may malfunction. Adjust the lightest brake pressure as possible.

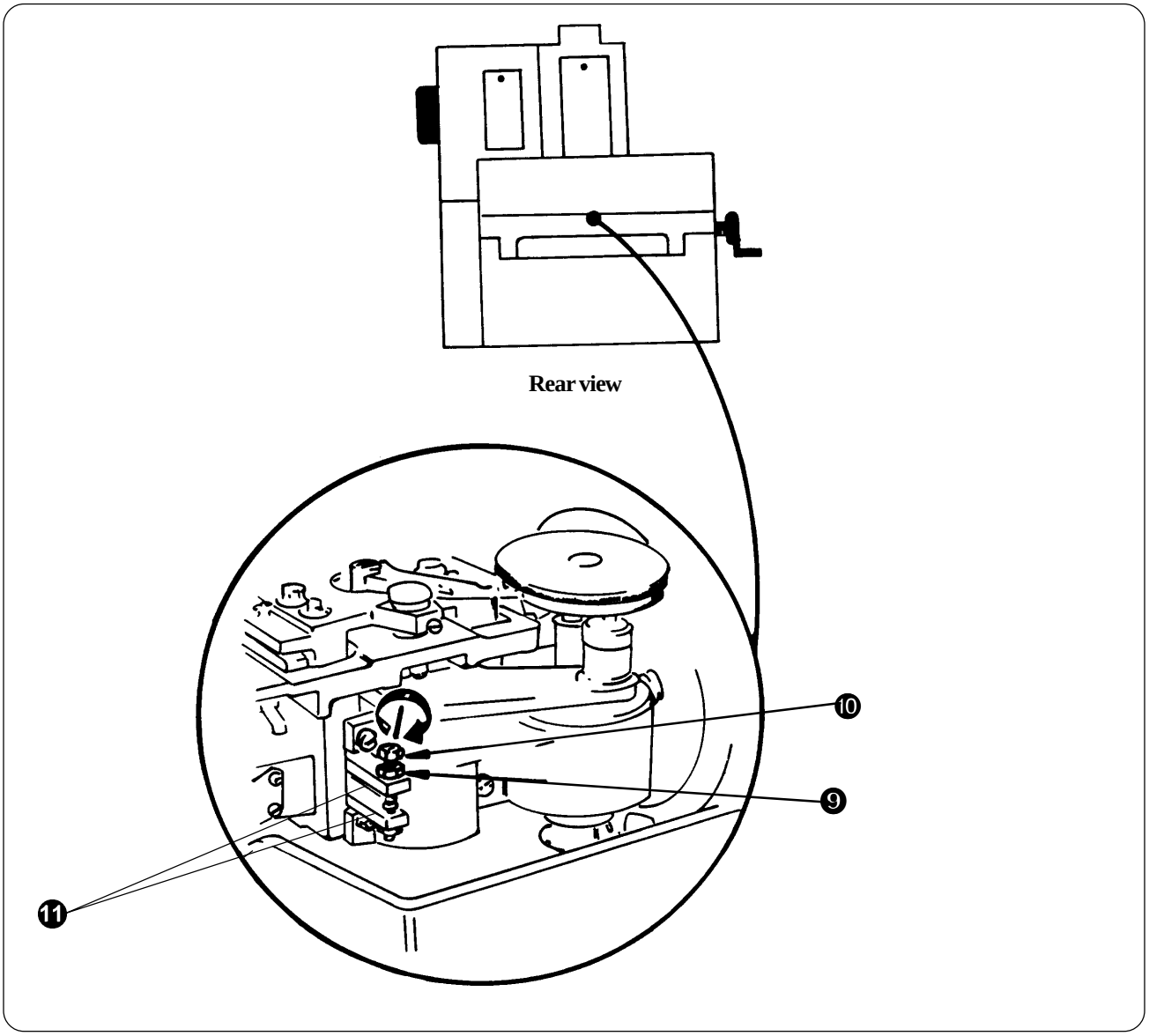

2. ADJUSTMENT OF THE STITCHES DENSITY IN THE EYE

This mechanism is not used for machine S 100 - 052 and S 100 - 053.

1. Fold the rear cover.
2. Loosen the screws ❶ and ❷. Move with shim ❸ forward operator and the stitch density will de crease.
3. Tighten the screws ❶ and ❷

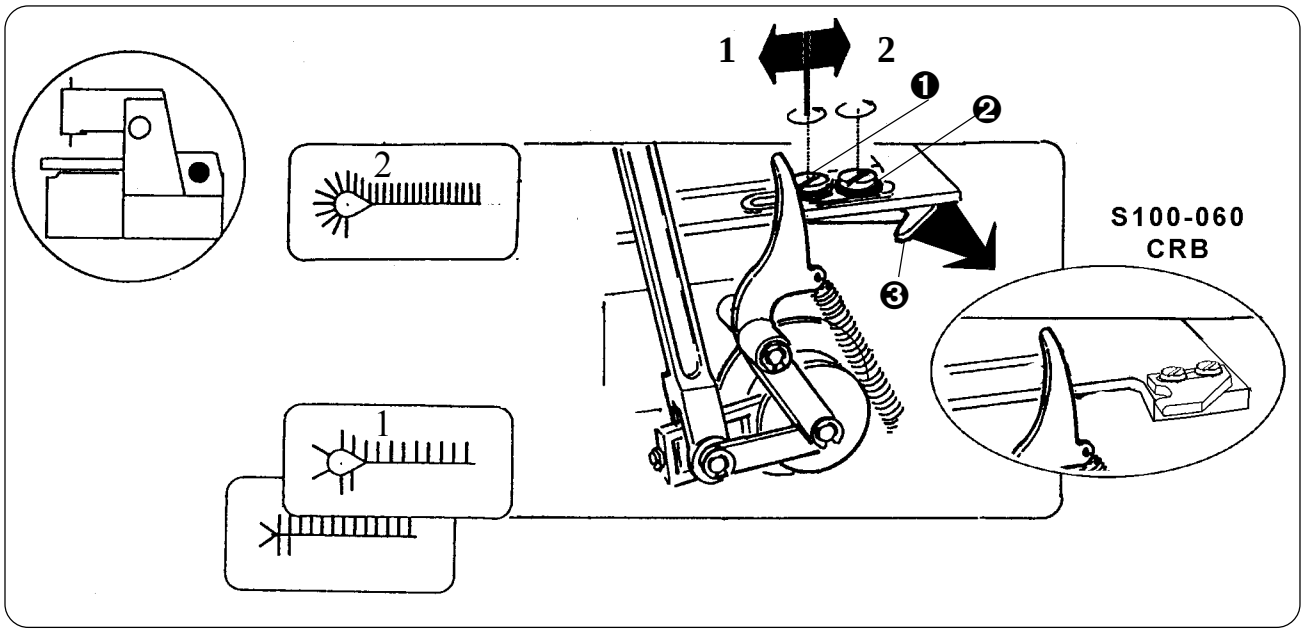

3. ADJUSTMENT OF THE STITCHES DENSITY IN CROSS BAR

(modification S 100 - 060)

1. Lift the machine head.
2. Loosen the nut ❹. Move rod stud ❺ with lever ❻ in ring ❼ to centre of ring or from centre of the ring.
   By moving the lever to the centre the stitches density is decreased,
   by moving the lever form the centre the stitches density is increased.
3. Tighten the nut ❹.

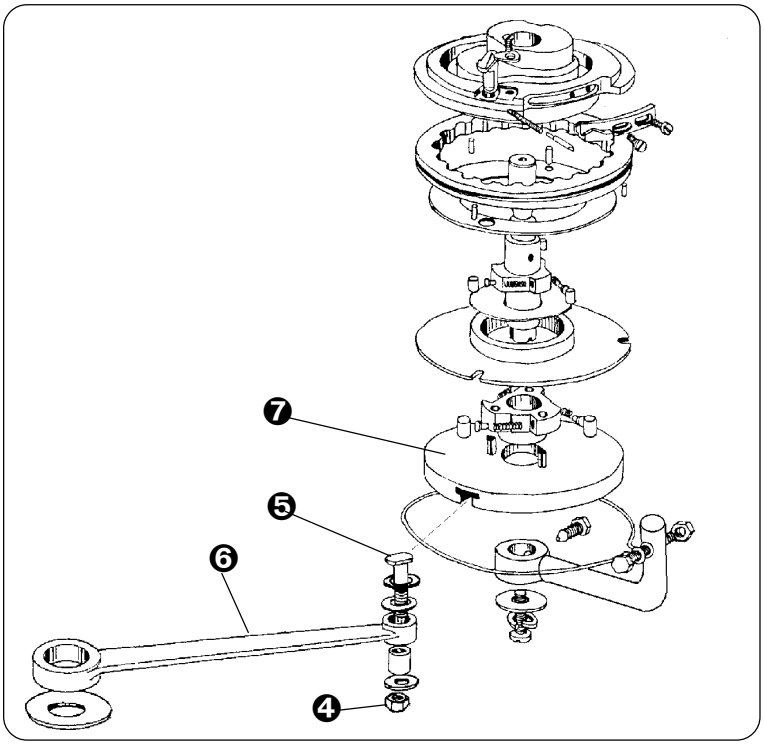

e-mail: service@amfreece.cz ; parts@amfreece.cz; website: www.amfreece.com
Phones: +420 582 309 146 (Service), +420 582 309 286 (Spare Parts); Fax: +420 582 360 606

4. LENGTHS OF THE SEWING

The mechanism is not used for machine S 100 - 052 and S 100 - 053.

1. Loosen the clamp screw ❶ and move with the rod till ❷, so that the needed sewing length on the dial rod ❸ is covered with the indicator mark ❹.

2. Tighten the screw ❶.

The total length of the sewing **L** was just adjusted - see picture.
Note: The total sewing length is the sum of the: **length of cutting plus the length of the bar**.
If the fly bar sewing is needed, it is necessary to change the length of the shape cam.

WARNING ! When the length of buttonhole is changed, it is necessary to change also the cutting steel with appropriate length.

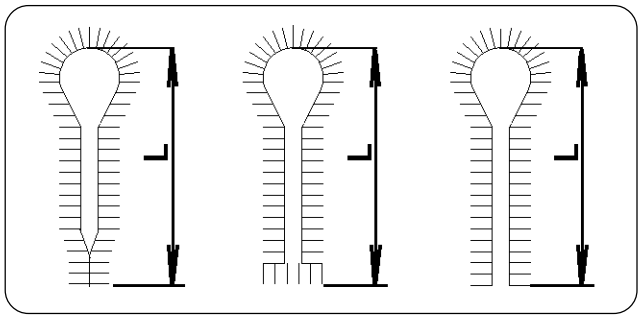

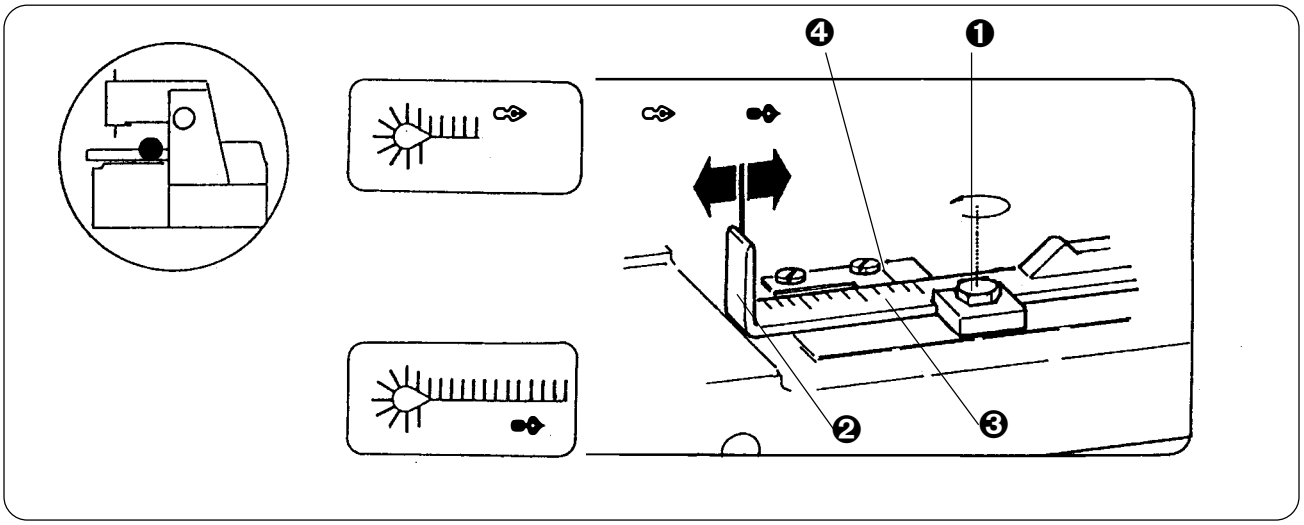

5. CHANGE OF THE BUTTONHOLE SHAPE - CHANGE OF THE LATERAL CAM

Machines S 100 - 030, S 100 - 031 and S 100 - 032

Fly bar

1. Loosen the screw ❶.
2. Lift the roll stud ❷, so that the locking lever ❸ allows the insertion of new lateral cam ❹.
3. Tighten the screw ❶.

No bar - to adjust the fly bar with open end of the buttonhole, follow this steps:

1. Loosen the screw ❶.
2. Push the roll stud ❷ and insert the cam.
3. Tighten the screw ❶.

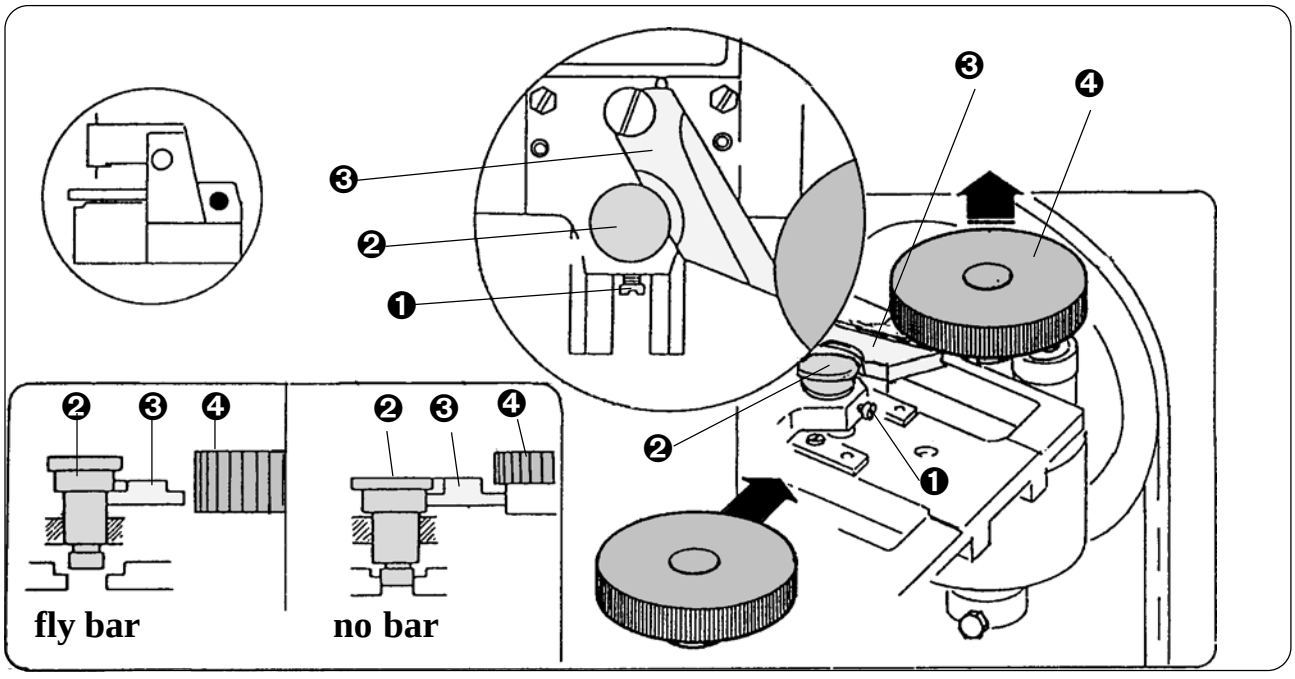

Machines 052/053/033/035/036 - unscrew the screw on the lateral cam, remove the cam, insert the new one and tighten the screw.

Machine 060 - Remove the cam and insert the new one. To sew fly bar or no bar buttonhole, instead of cross bar - follow the section **G 5, G6**.

Revised 10/2005
e-mail: service@amfreece.cz ; parts@amfreece.cz; website: www.amfreece.com
Phones: +420 582 309 146 (Service), +420 582 309 286 (Spare Parts); Fax: +420 582 360 606

Supplied lateral cams:

Length	FOR BUTTONHOLES WITHOUT EYE		FOR BUTTONHOLES WITH EYE		
	eye/shape	cam type .030	eye/shape	cam type.030	cam type .035
13-40	0	17.0067.4.101	3/5	17.0067.4.102	
32	0	17.0067.4.145	3/5	17.0067.4.161	
29	0	17.0067.4.144	3/5	17.0067.4.160	
26	0	17.0067.4.143	3/5	17.0067.4.159	
24	0	17.0067.4.142	3/5	17.0067.4.158	
22	0	17.0067.4.141	3/5	17.0067.4.157	17.0067.4.106
20	0	17.0067.4.140	3/5	17.0067.4.156	
19	0	17.0067.4.139	3/5	17.0067.4.155	17.0067.4.105
18	0	17.0067.4.138	3/5	17.0067.4.154	
16	0	17.0067.4.137	3/5	17.0067.4.153	17.0067.4.103
16			* 3/5	17.0067.4.403	
14	0	17.0067.4.136	3/5	17.0067.4.152	
13	0	17.0067.4.135	3/5	17.0067.4.151	
12	0	17.0067.4.134	3/5	17.0067.4.150	
10	0	17.0067.4.133			
** 13-32	0	17.0067.4.405	3/5	17.0067.4.404	

* Only for order: flybar 7 mm, stitch width 2 mm
** Only for CRB

WARNING ! When the lateral cam is changed, it is necessary to ensure the adjustment of the correct buttonhole length, and install the correct cutting steel or knife.

6. CHANGE OF THE WIDTH BITE

Can be use for all machine modifications.

To adjust the width bite turn the button ❶ clockwise the width bite will decrease - see **1.**
By turning the button ❶ counter clockwise, the width bite will increase - see **2.**

The standard width bite is in range from 2,8 to 3,4 mm (0.110" to 0.134") it is adjusted by the manufacturer.
To change the width bite adjusted by manufacturer, follow this steps:

1. Loosen the screw from the button ❷ and remove the adjustable button ❶.
2. Remove the screw ❸, the cover ❹ and also the adjustable screw of the width bite ❺ .
3. Rotate with adjustable segment ❻ until the hole determining the width bite is not obtained.
4. Install the adjustable screw ❺ and mount removed parts.

WARNING ! When the width bite is changed, it is necessary to adjust the loopers.

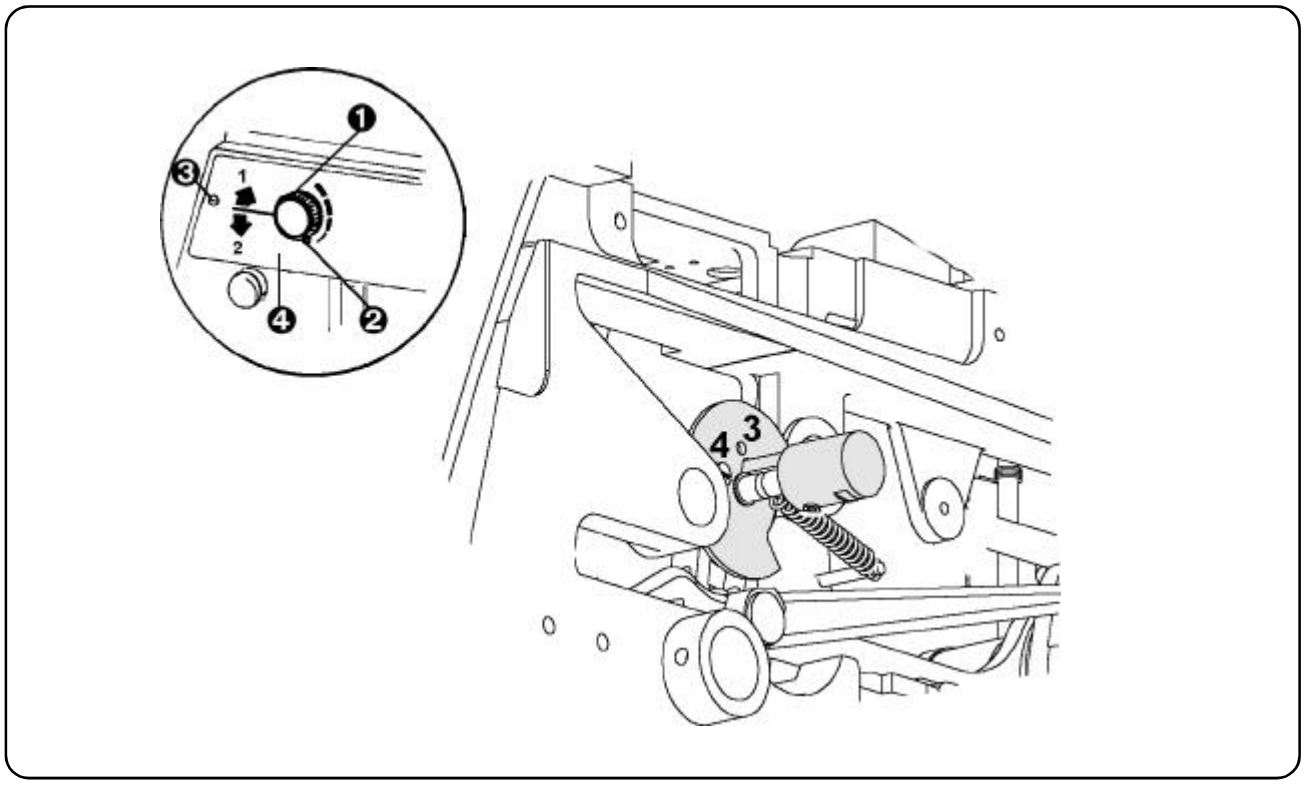

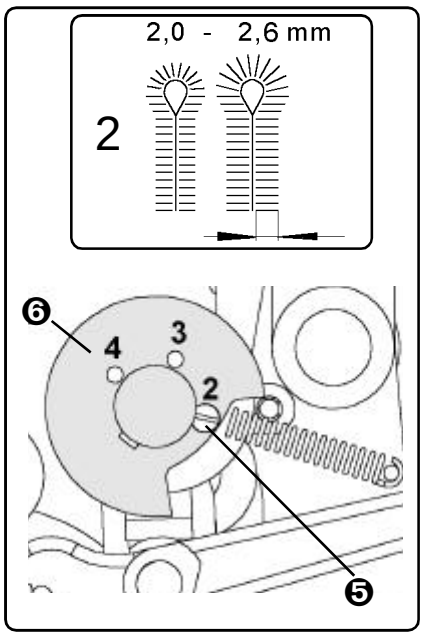

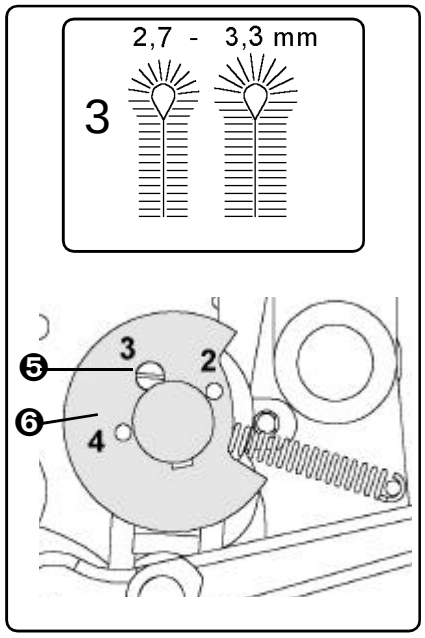

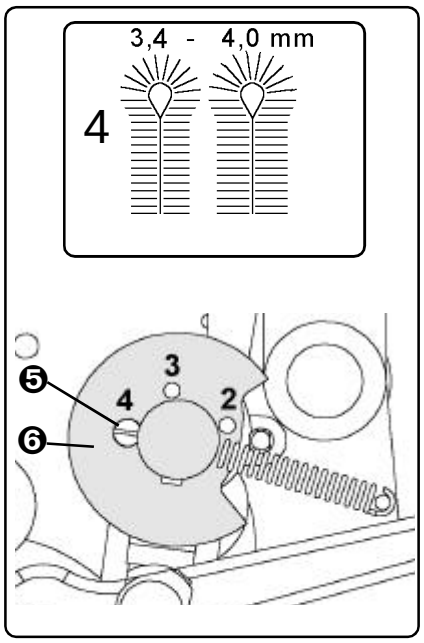

Revised 10/2005

e-mail: service@amfreece.cz ; parts@amfreece.cz; website: www.amfreece.com
Phones: +420 582 309 146 (Service), +420 582 309 286 (Spare Parts); Fax: +420 582 360 606

D - MACHINE ADJUSTMENT

Adjustment of the width bite in the cross bar

The cross bar can be narrow down only by maximally 0.6 mm in adjusted width bite;.

1. Remove the side cover of the head.
2. Check if , is in the moment of maximal pressure during the cutting the bracket ❹ over the tooth on the block ❺. If is not, heave it by screw ❻, so that is maximally 2 mm over the tooth ❺. After turning the mechanism ❼ to the working position, the bracket ❹, must fall to the top of the pivot ❽. After the buttonhole is sewn is the bracket ❹ in the front of the pivot ❽. During the sewing the cross bar, the bite size is decreased.
   If the bracket fall down to the front of the pivot before the sewing first part of the buttonhole, it will occur prematurely decreasing the bite size, in that case, is the table moving minimally and the machine is sewing almost in one place.
3. Loosen the screw ❶, and rotate the ring ❷ to change the bite width in the cross bar (counter clockwise, the bite size increases, clockwise is the bite size decreased - from upper view)
3. Tighten the screw ❶.
4. It is necessary to move the stop ❷ by the same amount of the millimeters as the ring ❸ has been moved, but in the opposite direction.
5. Install the left side cover.

NOTE : This width is adjusted from the manufacturer and it is not necessary to adjust it again.

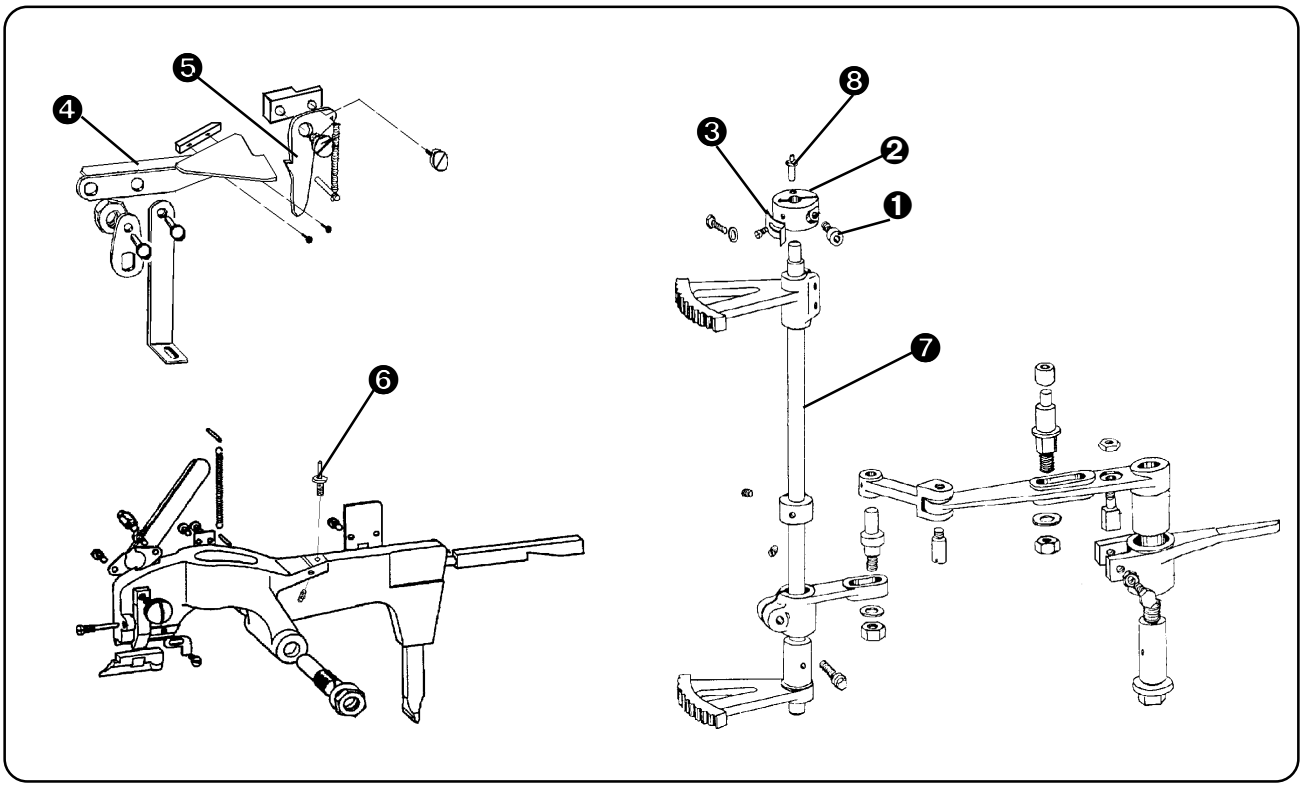

7. PRINCIPLES OF SEWING

S - 100 machine, produced by AMF Reece, sews two-thread, chain stitches with possibility to insert the gimp.

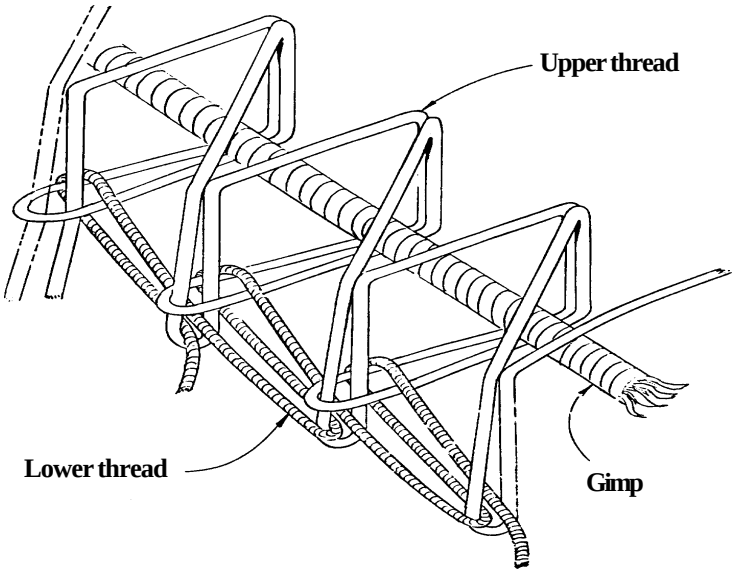

Revised 10/2005
e-mail: service@amfreece.cz ; parts@amfreece.cz; website: www.amfreece.com
Phones: +420 582 309 146 (Service), +420 582 309 286 (Spare Parts); Fax: +420 582 360 606

A stitch is the unit of thread formed in the production of seams and stitching.
Stitching is defined as a series of stitches embodied in a material for ornamental purposes, for finishing an edge, or both.
The type of stitch used in the eyelet buttonhole machine is a 401 stitch, two-thread, chain lock, purl stitch enveloping a reinforcing cord. When the thread, loopers, and spreaders create a buttonhole:

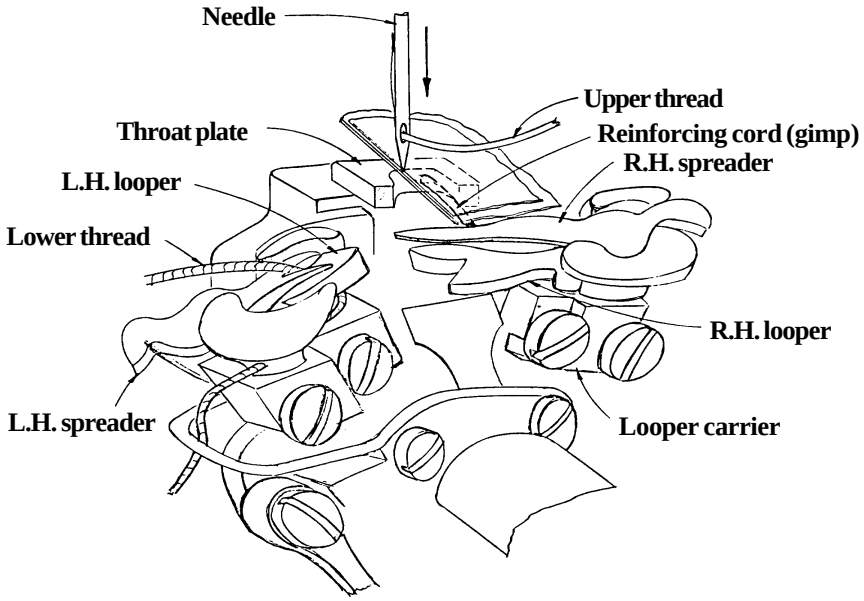

A loop is formed when the needle rises. The looper carrier moves to the right and the left-hand looper enters the formed loop.

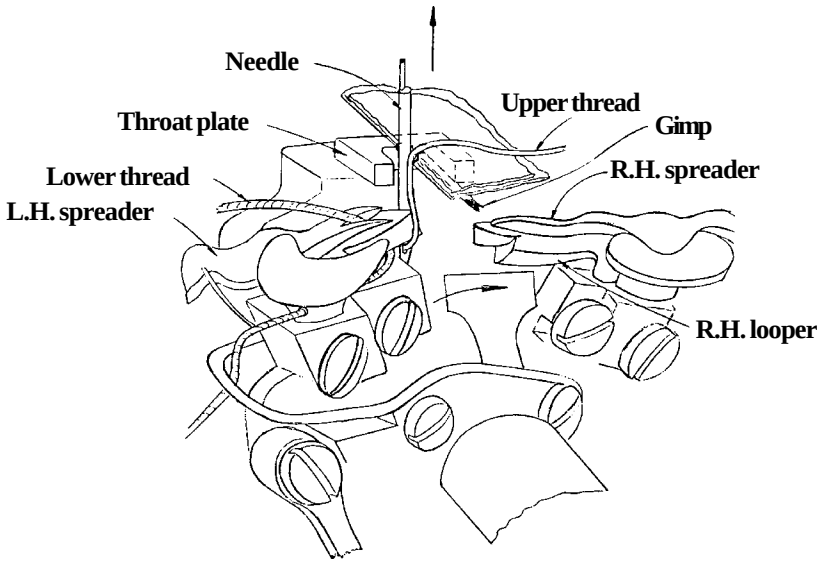

The looper carrier continues moving to the right, carrying the lower thread, the left-hand looper, and the spreader, fully enter the formed loop.

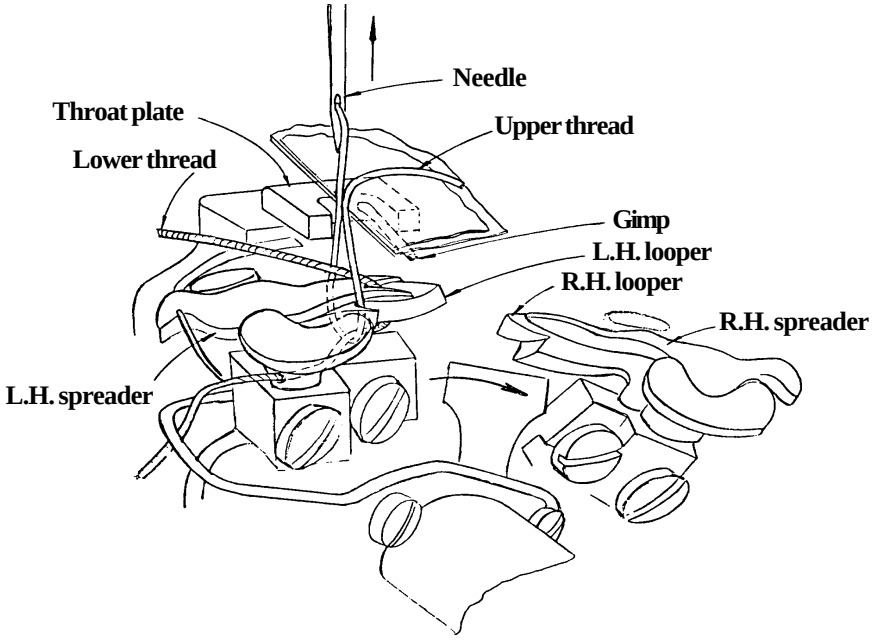

The left-hand spreader opens, making room for the needle to pass through a loop formed by the lower thread. With this penetration, the needle encompasses the cord.

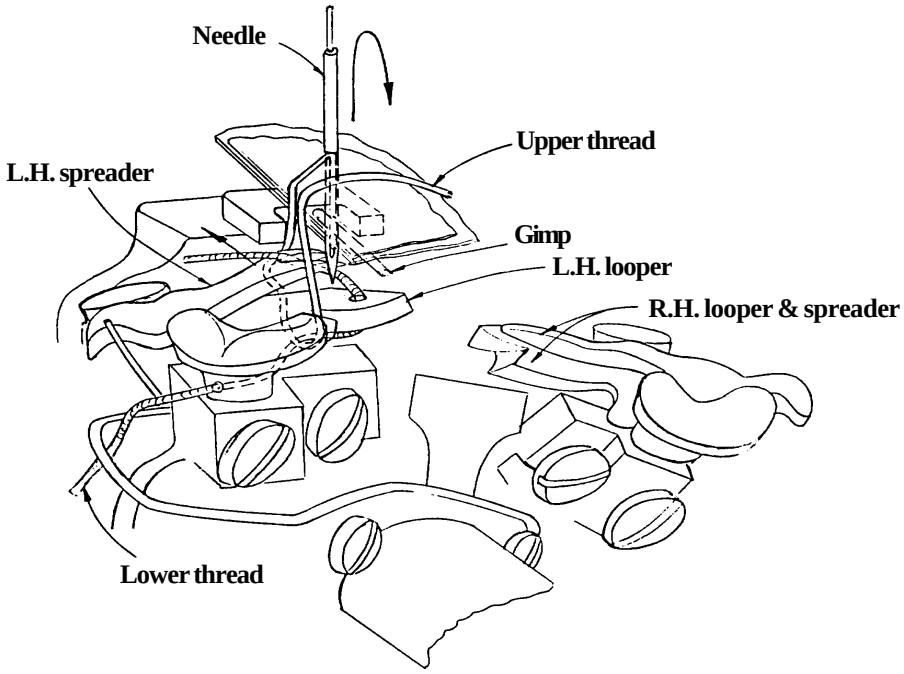

Revised 10/2005
e-mail: service@amfreece.cz ; parts@amfreece.cz; website: www.amfreece.com
Phones: +420 582 309 146 (Service), +420 582 309 286 (Spare Parts); Fax: +420 582 360 606

As the needle moves down to form a new loop, a take-up implement pulls the upper thread up into the material, and brings the lower thread with it.

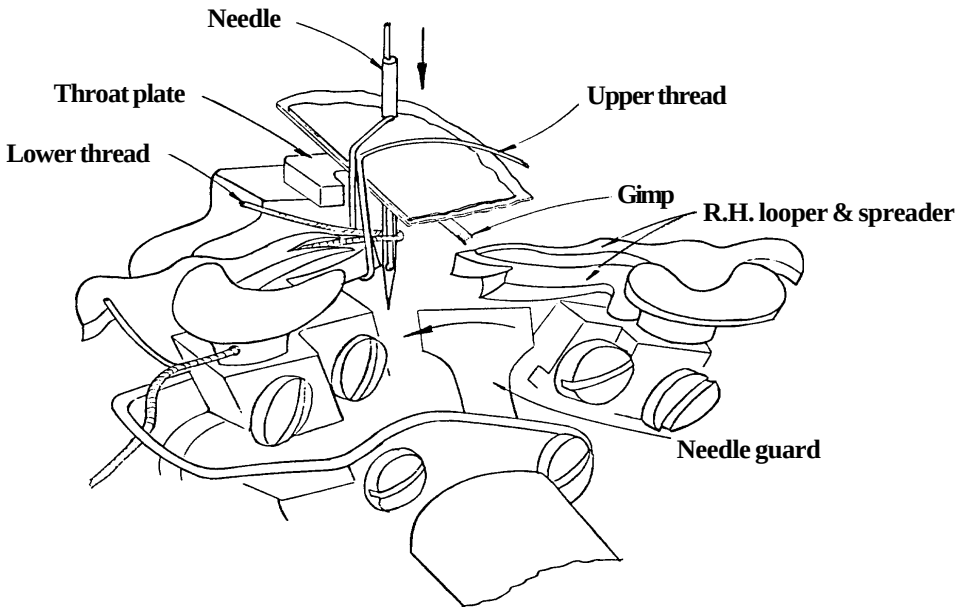

A loop is formed as the needle rises. The looper carrier continues moving to the left and the right-hand looper, enter the new loop formed. The previous loop is pulled up tight against the material.

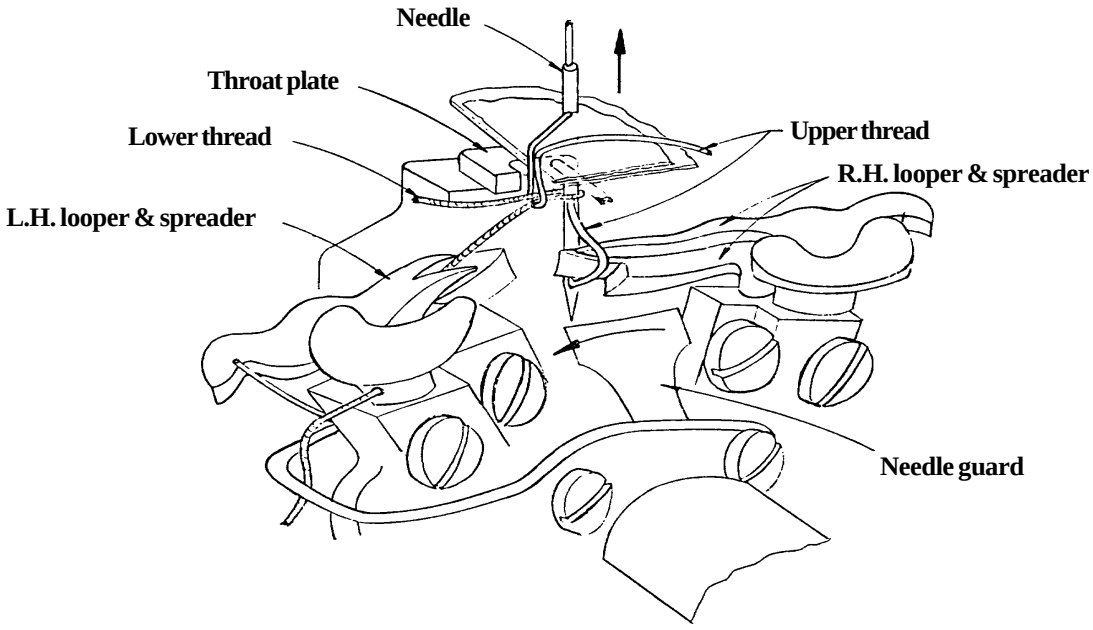

The looper carrier continues moving to the left. The right-hand looper and spreader fully enter the formed loop.

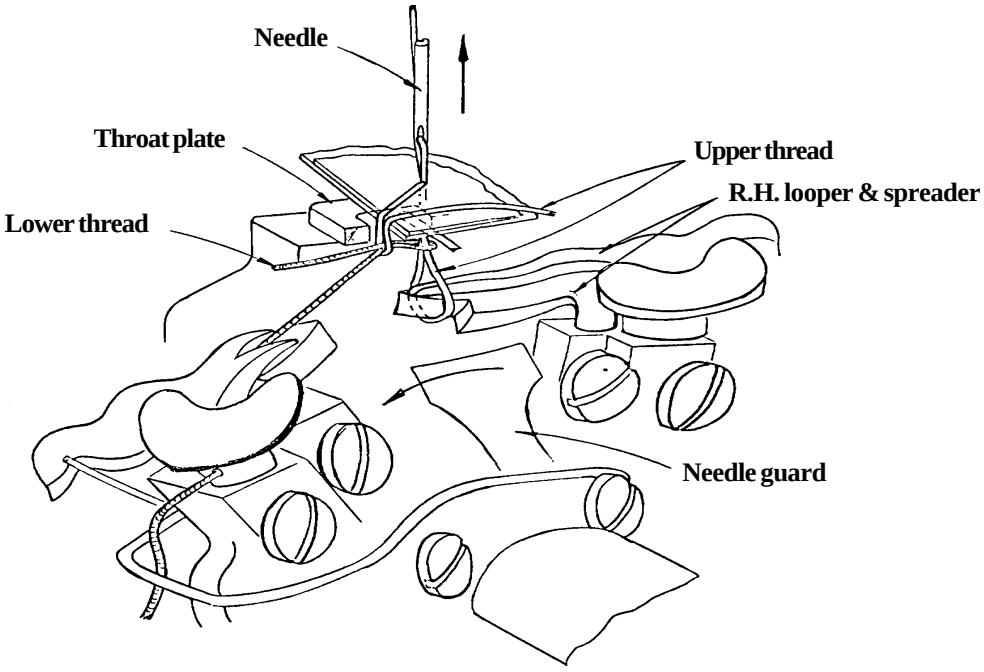

The right-hand spreader opens, making room for the needle to pass through a loop formed by the upper thread.

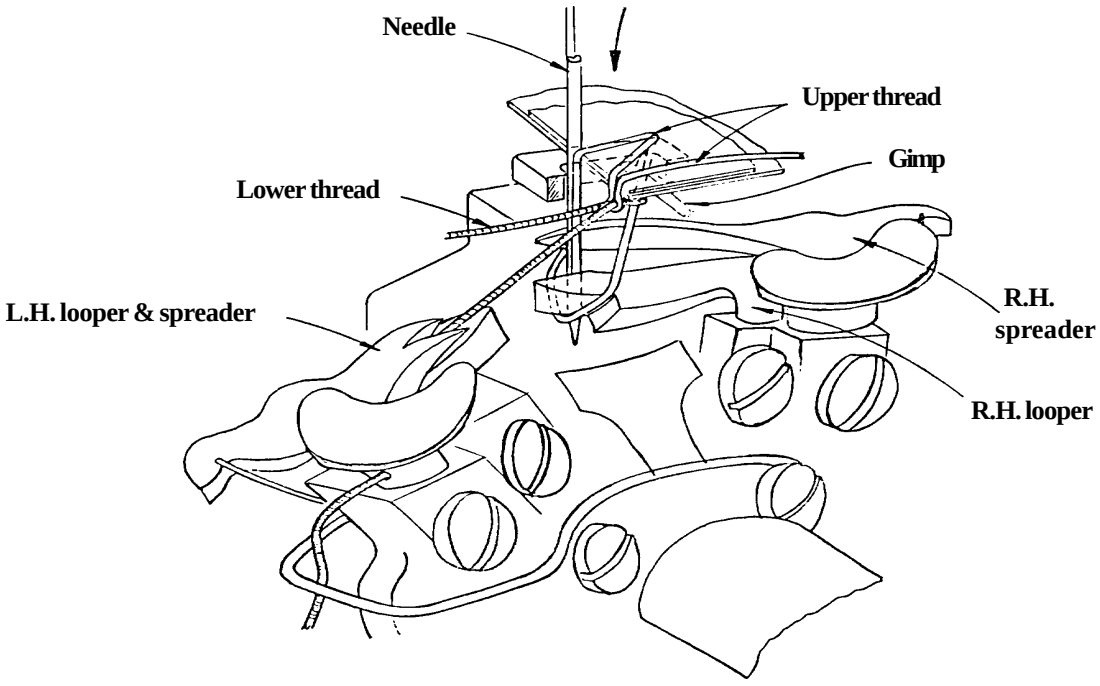

Revised 10/2005

e-mail: service@amfreece.cz ; parts@amfreece.cz; website: www.amfreece.com
Phones: +420 582 309 146 (Service), +420 582 309 286 (Spare Parts); Fax: +420 582 360 606

The looper carrier moves to the right as the needle "strips" the loop previously formed. The left-hand looper enters the new loop which is being formed.

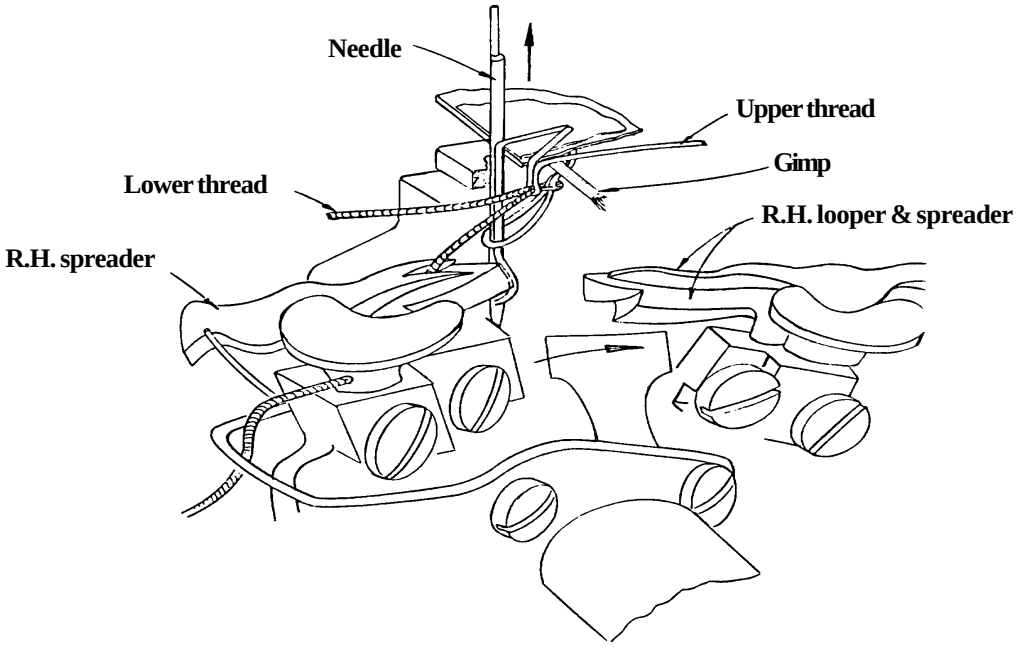

The lower thread forms a purl as it, and the previously formed thread loop, are pulled up against the material. The enveloped cord provides the buttonholes with body.

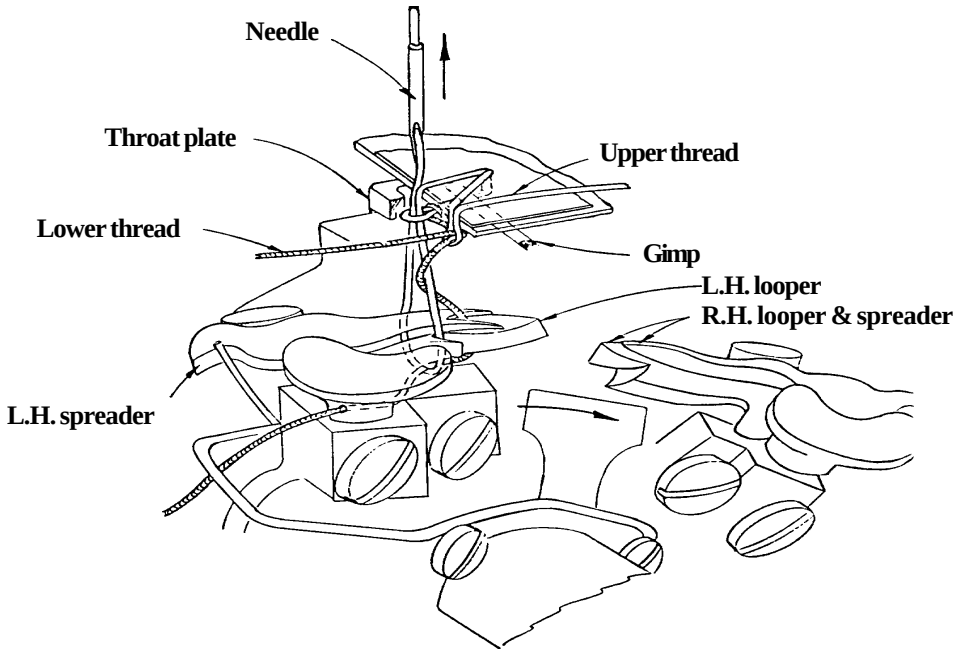

8. BED PLATE ALIGNMENT

Make the adjustment with the lateral cam for sewing of the buttonhole without eye and without flybar.

1. Remove feet plates and instead of stitching plate install support of the gauge ❶ from accessories.
2. Turn by the handle and stop the machine approximately in the middle of the table protrusion ❷. Measured distance between support of the gauge ❶ and the table slat ❸ on the right side has to be the same as distance between support of the gauge and table slat on the left side after moving to the same place after race turning.
3. Possible difference adjust after loosing the nut stud ❹ of the cam ❺ by its shifting to reach identical distance $x_1 = x_2$. Tighten the nut well.

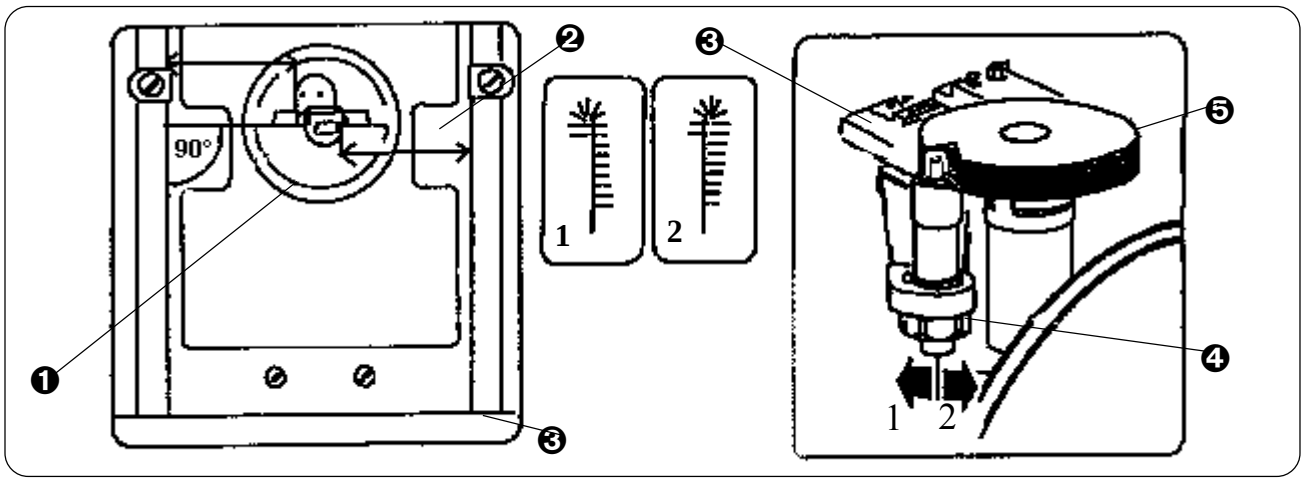

9. SETTING OF THE CAM POSITION

In home position of the machine, during cutting after, adjust the position of the cam holder, so that locating pin points obliquely towards operators.
Loosen adjusting screws on the shaft in teething of the cam and turn with the cam. By this will be change the buttonhole eye shape. Tighten adjusting screws.
Remove cutting knife and take the thread out of the machine. Insert the paper under clamp feet and without thread sew the buttonhole on the paper for check. If the eye shape looks like picture **1** below, turn the cam in direction **2.** If the eye shape looks like picture **2** down, turn the cam in direction **1**.

CAUTION! To perform correct adjustment, turn with the cam very softy.

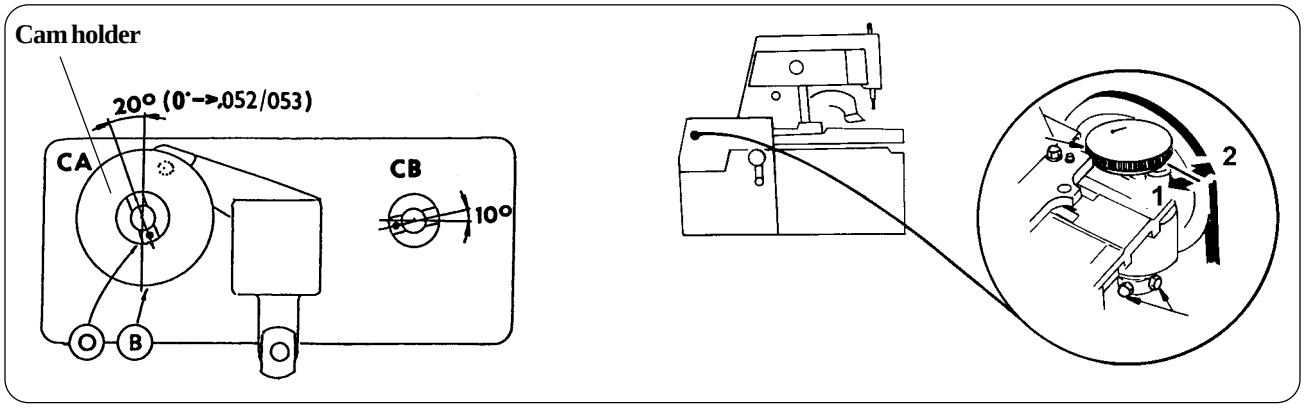

e-mail: service@amfreece.cz ; parts@amfreece.cz; website: www.amfreece.com
Phones: +420 582 309 146 (Service), +420 582 309 286 (Spare Parts); Fax: +420 582 360 606

10. TURNING MECHANISM

WARNING ! This adjustment can be performed only by well trained mechanic.

If the stitches are not vertical to the catted hole, it is necessary to adjust the turning mechanism:

1. The machine must be in home position.
2. Loosen the screw ❶ and adjust the looper holder, so that the looper holder is vertical to the length ways axis of the table. Tighten the screw ❶.
3. Loosen the screw ❷ and adjust the needle bar so that tension discs ❸ are in direction towards the operator. Tighten the screw ❷.

If the stitches are not in direction to the centre of the eye, follow this steps:

1. Lift the machine head.
2. Loosen the nut on the roller stud ❹ of the turn lover according to the necessity. By moving down direction **2**, turning starts earlier and by moving up direction **1**, turning starts later. Tighten the nut stud ❹.

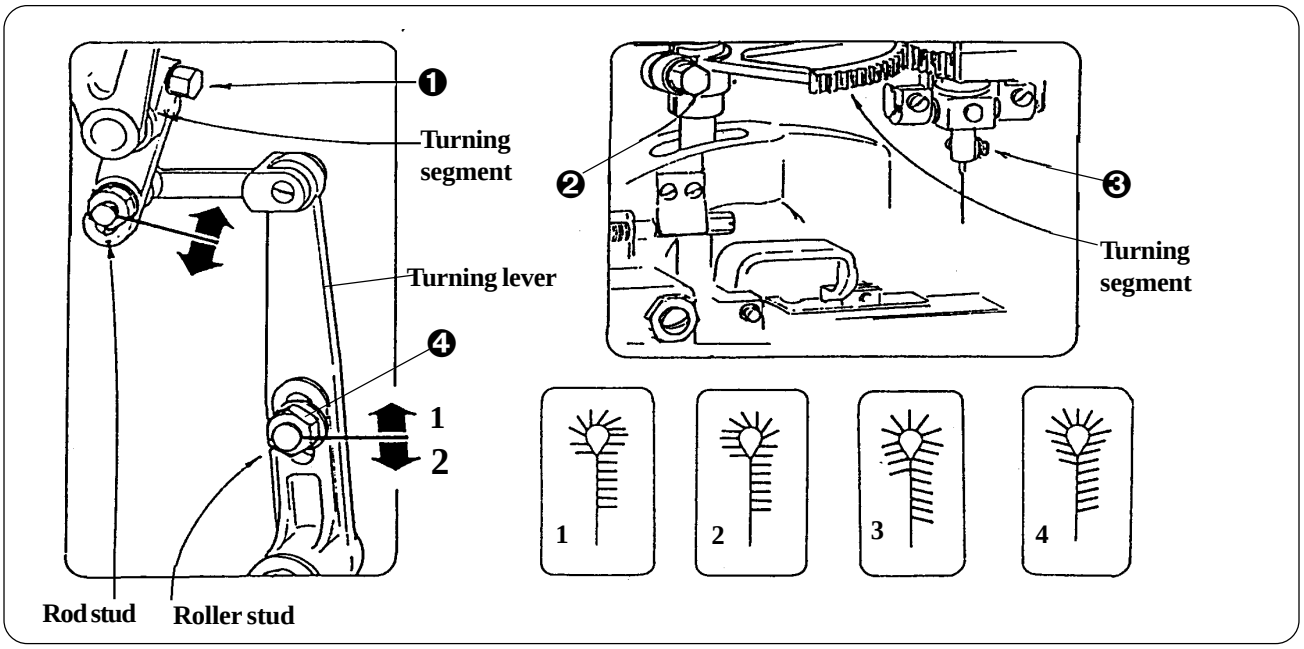

Check the correct position by means of the enclosed gauge from accessories.
Give down the machine head. Remove the stitching plate. By turning the handle on the machine left side, go with the table to the half of the sewn buttonhole in the first row of stitches.

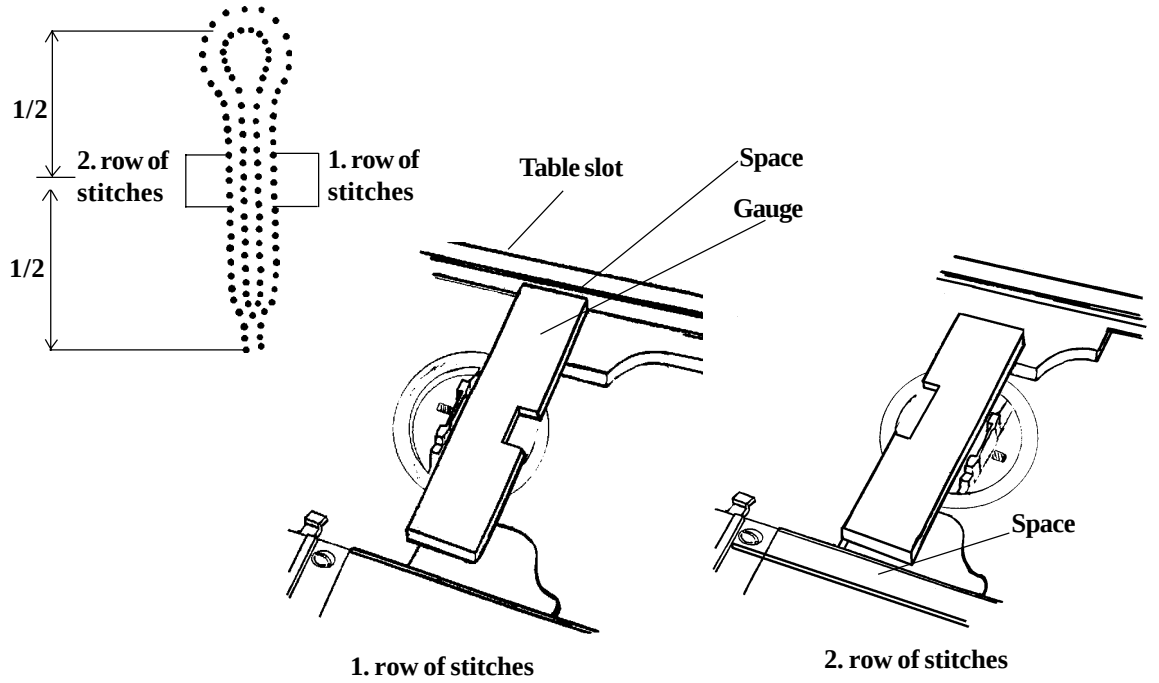

Give straight edge of the gauge over front edge of the supporting surface of the loopers. Check the space between the gauge and the table slat.

By turning of the handle on the left side of the machine, go with the table to half of the second row of the stitches.

Check the distance between gauge and the left table slat again.
The position is correct, if there is no clearance between the gauge and the straight edge - the edge is parallel to the table slat.

If not, modify the turning of the sewing mechanism by $180^{o} \pm 2^{o}$ so that after machine lifting, loosen the nut stud of the rod and shift until tilt between the gauge and the table slat is decreased to the half. Tighten the nut.

During the stud movement towards **3**, increase the rotation angle of sewing mechanism , towards **4**, the turning angle decreases.

Normally, this adjustment is pursued several times until you reach correct adjustment.

Revised 10/2005
e-mail: service@amfreece.cz ; parts@amfreece.cz; website: www.amfreece.com
Phones: +420 582 309 146 (Service), +420 582 309 286 (Spare Parts); Fax: +420 582 360 606

11. STOPPING MECHANISM

WARNING! Switch off the main power to prevent accidental engagement of the machine.

Rotate the handle until the machine is in the home position. In the home position, the bedplate no longer moves to the rear. This adjustment is pursued when cutting after - CA is adjusted.
Rotate the hand wheel until stopping mechanism locks the movement of the sewing drive.

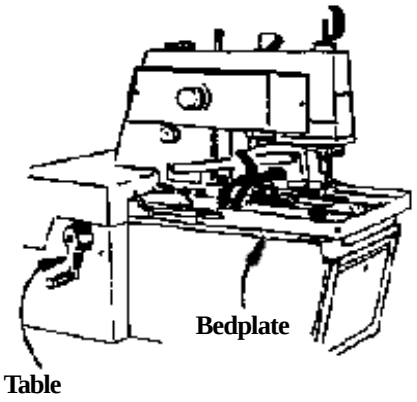

Push the link back. The lever must latch over the roller stud. After loosing the nut adjust by the stop screw clearance 0,1 - 0,15 mm (0.0039 - 0.0059") between roller and length gauge. Then setup stop to the roller stud with clearance min. 0,1 mm (0.0039").

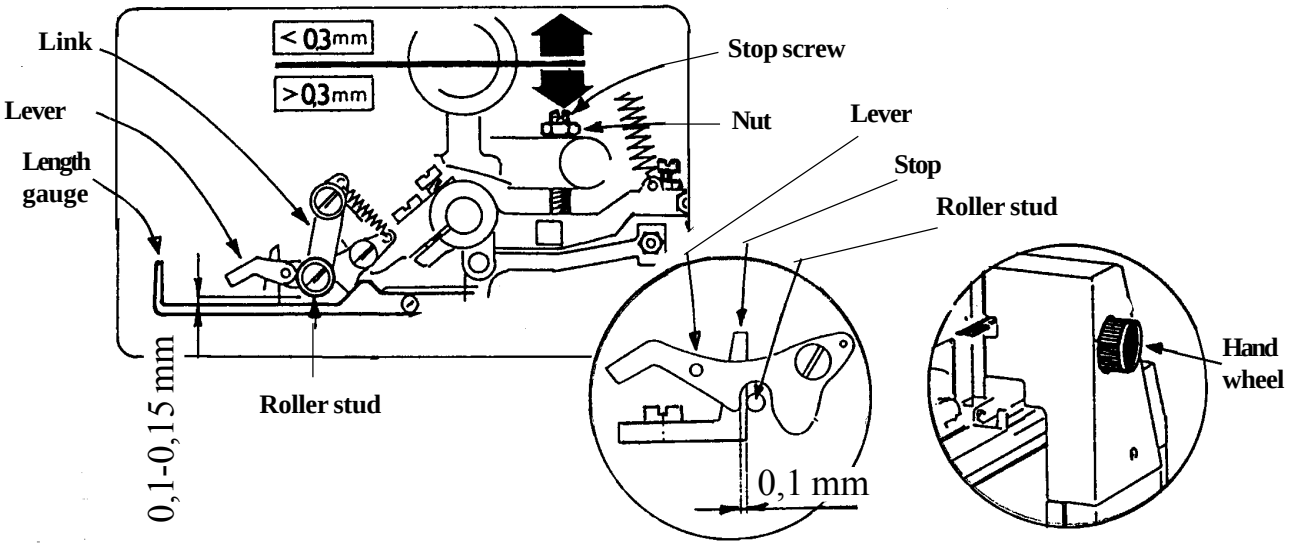

The clearance between the brake shaft and the cam of the hand wheel should be 0,05 - 0,10 mm, (0.002" - 0.004"). It can be adjust after loosing the screw of the three fork lever (below). Pull up the locking lever forward.
In the lowest place of the cam of the hand wheel, after clearance adjustment, tighten the screw.
Adjust the clearance between left drive pulley and spool to 2 - 3 mm. (0.078" - 0.118")¨. Turn the handle (page 1-36) till the shaft of the hand wheel is loosen and adjust the clearance min. 0,25 mm, (0.098") between dogs. Use for this adjusting screw after loosing its nut.

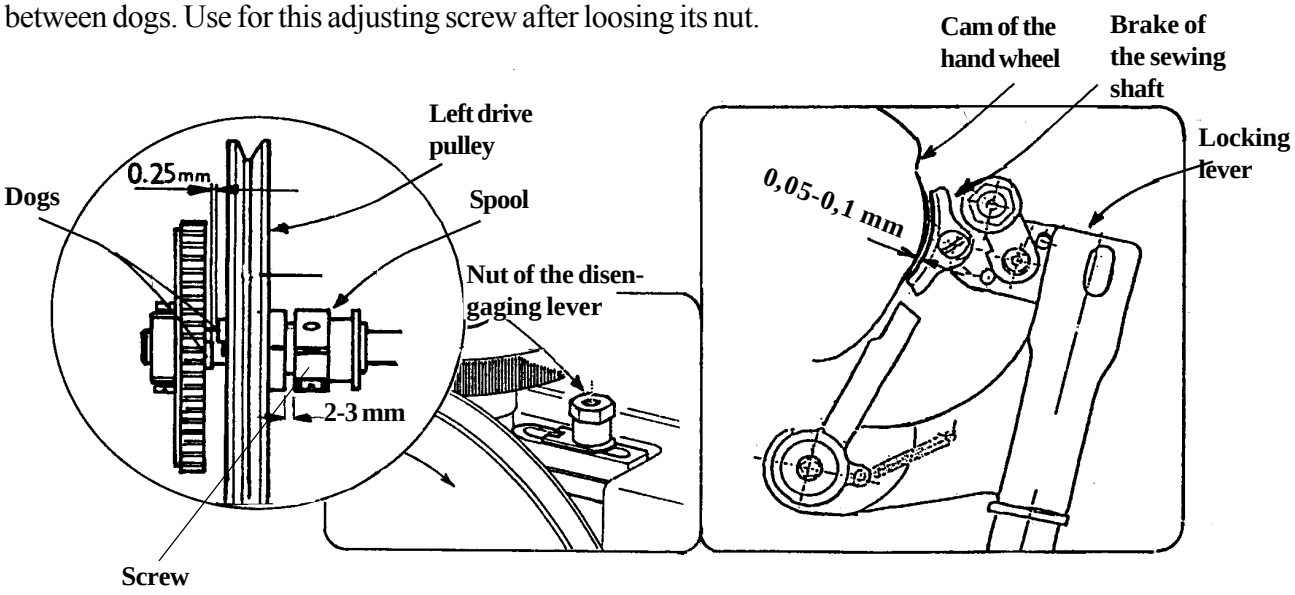

By turning the hand wheel and when the roller is in the highest position of the length gauge, adjust the clearance 0,1 - 0,2 mm (0.004" - 0.008") between the stud and disengaging lever after loosing the nut of this lever. Tighten the nut well.
Turn the hand wheel till the roller is out of the highest position of the length gauge. Push the disengaging lever. In this moment during the turning the hand wheel anti-clockwise, the brake is in contact with travel of the hand wheel. The clearance between the dogs must be at least 0,25 mm (0.098") or more.
By handle move with the machine table to the end position. Adjust the clearance between the dogs after nut loosing to 0,25 mm (0.098") or more. Switch on the main power (circuit breaker) and test the machine cycle.

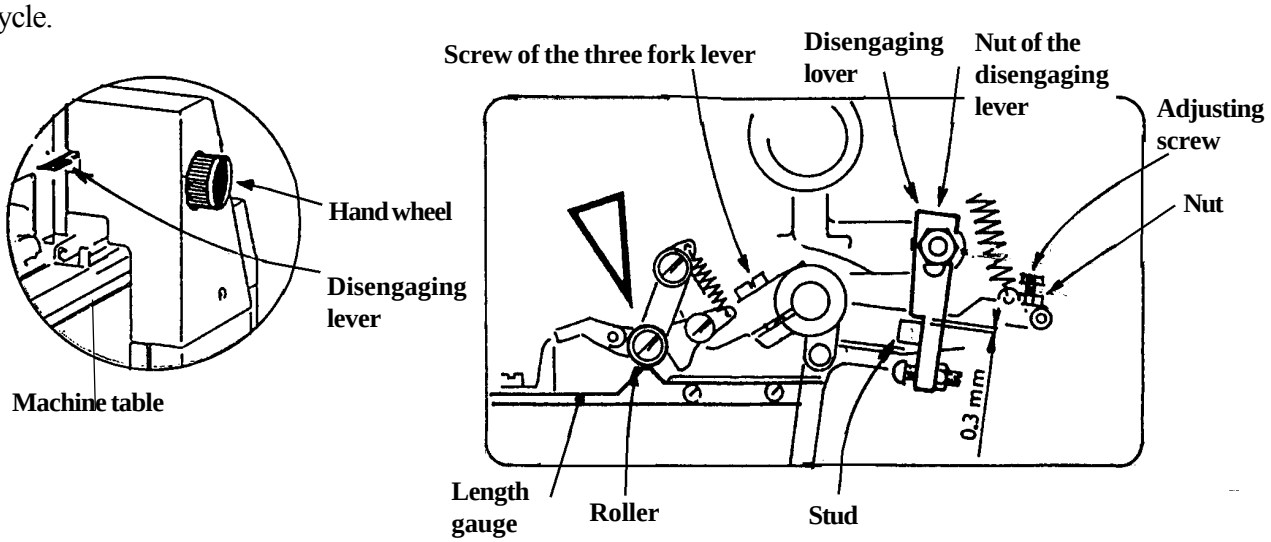

Note: Normally, this adjustment is pursued several times until you reach correct adjustment.

e-mail: service@amfreece.cz ; parts@amfreece.cz; website: www.amfreece.com
Phones: +420 582 309 146 (Service), +420 582 309 286 (Spare Parts); Fax: +420 582 360 606

12. SETTING-UP OF THE MECHANISM FOR FABRIC CLAMPING

Basic position of the feet plates with the feet is possible to adjust in position, when by turning the hand wheel the rollers are on the spreader block of the knife holder (picture, page 1-39) and feet plates are opened. After stop screws loosing is possible to adjust the stops. The space X between the table slat and feet plate should be identical by both plates (approximately 0,8 mm, 0.031"). It is reached after setting the space by first foot plate, and loosening its screw and pushing the second stop, so that the plates are leaned on stops. Parallelism of the plates, adjust by shifting of the clamp stud for $x = x_1$.

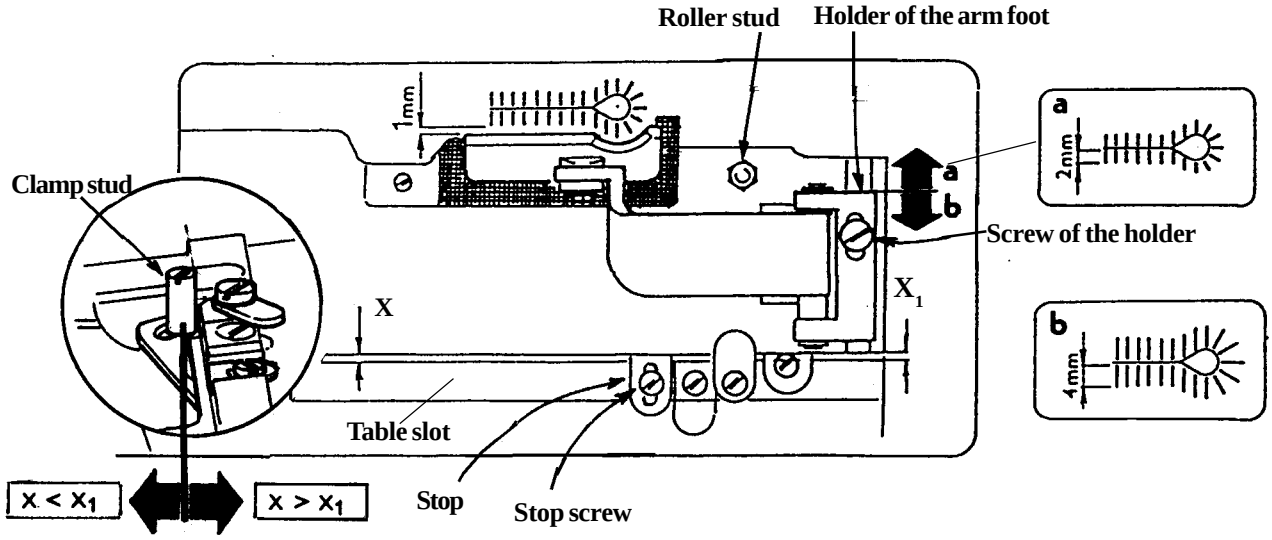

The standard clearance between the clamp feet and the needle surface is 1 mm. To change the standard bite size (2,8 - 3,4 mm, 0.110" - 0.134"), to bite 2,0 - 2,8, (0.078" - 0.110") or 3,4 - 4,0 mm, (0.134" - 0.157"), loosen the screw of the holder and adjust the needed clearance by shifting the holder of the arm foot. The clamp feet are set by manufacturer for medium/heavy weight materials. The construction of the spring-loaded drive levers allows to sew wide range of the fabric thickness. For sewing of the thin fabrics is possible to adjust the press by shifting the stud of the control lever after loosing its nut. Ensure the set position by arresting screw.

Standardly set height of the clamp feet 10 mm (0.393") is possible to adjust by screw of the support. The needed overtravel to cca 1/4 of diameter of the stud (D/4), adjust by supporting screw. After swinging of the ejecting lever during clamp feet closing by the machine cycle, must its end pass the tooth of the control lever.

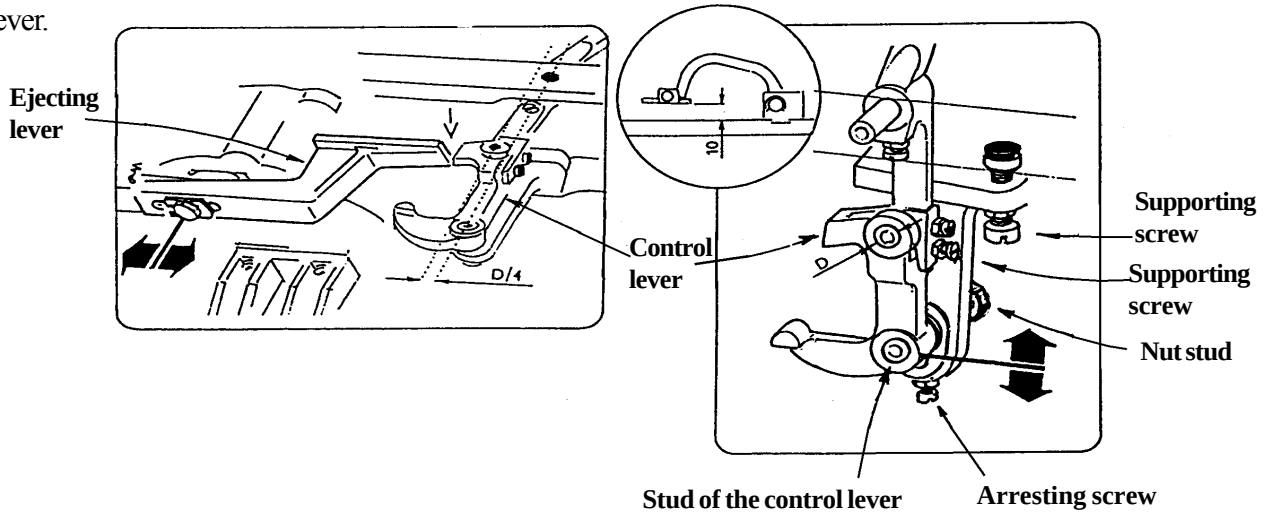

13. CLAMP PLATE SPREADING

The amount of spread distance is determined by the sewing application. Loose fabric (especially thin) should cause stitches missing.
Rotate the left-handle until the clamp plate rollers are positioned to the widest part of the spreader block..
After loosing the locking screw of the clamp, change the spreading size by the adjusting screw.
For denim, the producer recommends the spreading 0,6 mm between plate and located slipped out stop.

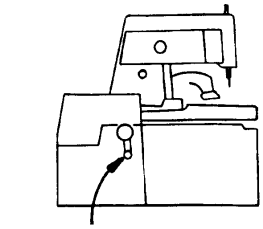

Left-hand crank

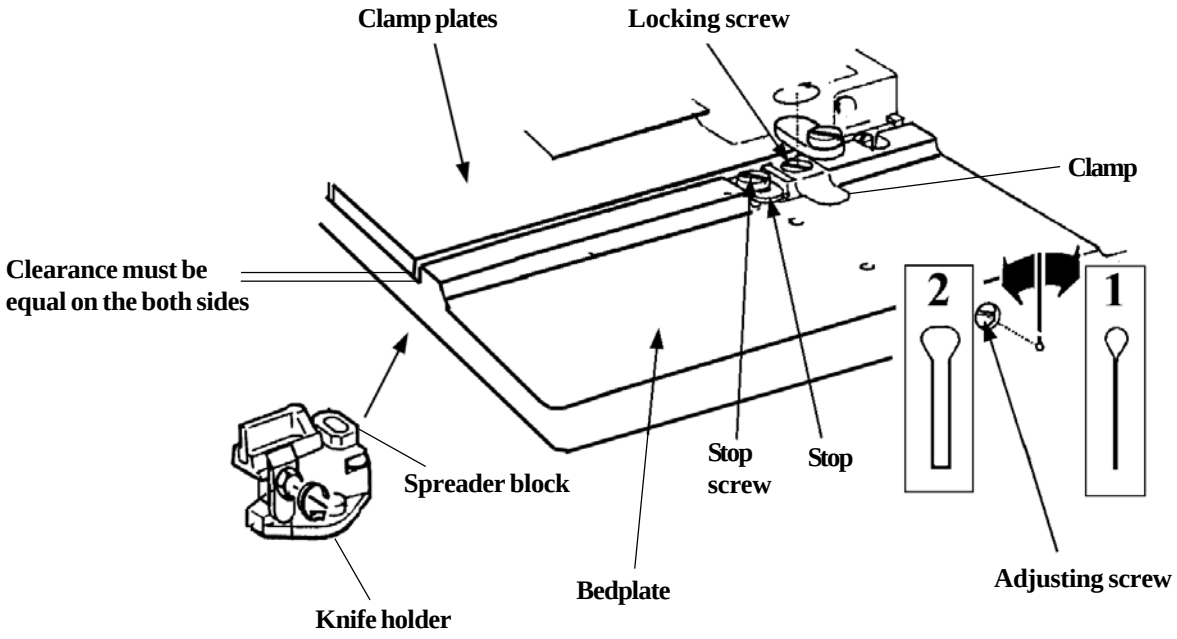

Revised 10/2005
e-mail: service@amfreece.cz ; parts@amfreece.cz; website: www.amfreece.com
Phones: +420 582 309 146 (Service), +420 582 309 286 (Spare Parts); Fax: +420 582 360 606

14. LENGTH SETTING-UP OF THE SECOND BUTTONHOLE ROW

1. Loosen the locking nut ❶ and rotate the adjustable screw ❷ for the correct last stitch stop location.
2. Rotating the screw in, the second row of stitches will be shorten, rotating the screw out, the second row of stitches will be longer.

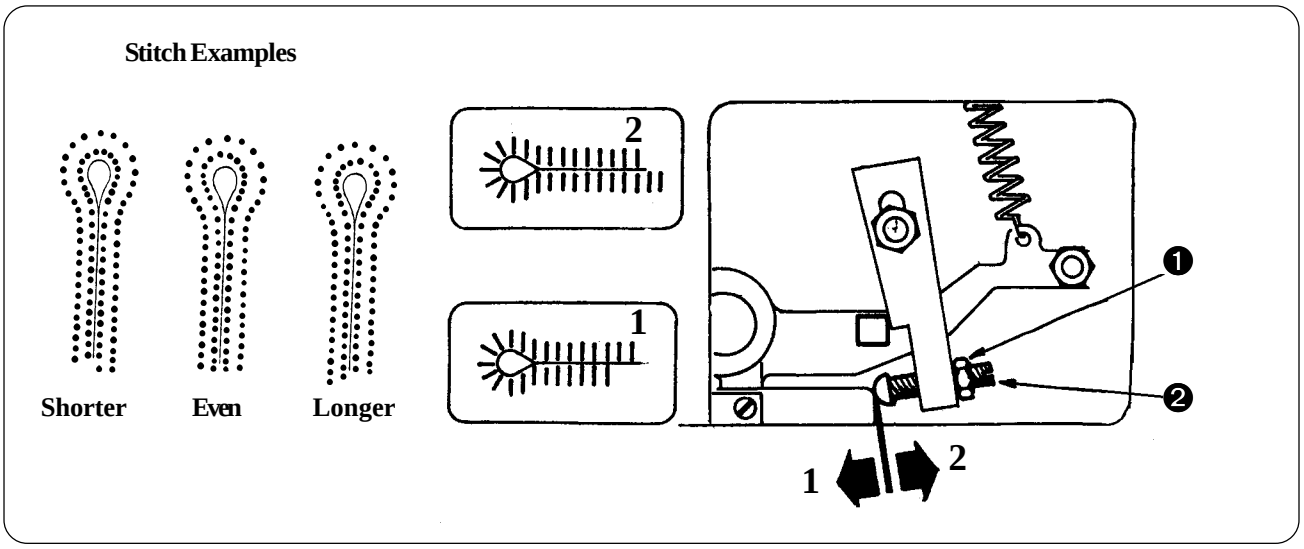

15. EYE SHAPE CONTROL

1. Install the throat plate.
2. Insert the prick-in needle ❸ 02.0001.0.000 into the needle bar. The depth of the needle into the needle bar must allow the point of the needle to just barely penetrate a piece of paper.
3. Place a piece of paper across the clamp area of the bedplate to check needle penetration.
4. Switch on the motor power.
5. Sew the sample and check regularity of the eye shape sewing. Remove appropriate faults according to the previous sections.

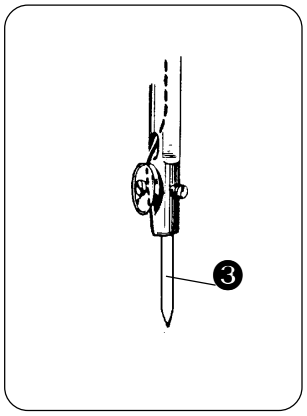

16. NEEDLE BAR HEIGHT

1. Perform this adjustment when the machine is in the home position
2. Remove the throat plate and the needle.
3. Install the support of the gauge ❶, instead of throat plate.
4. Install the needle bar height gauge ❷ and check the needle bar height, with the needle bar set at the bottom of the stroke. Standard height of the needle bar is 16.5 mm, (0.65") between the top of the gauge cutout and the bottom of the needle bar, when the needle bar is at the lowest point.

If the adjustment is incorrect :

5. Remove the front cover of the head.
6. Loosen the screws ❸ and move the needle bar up or down as needed. The needle bar can not have an axial clearance, but it must free rotate.

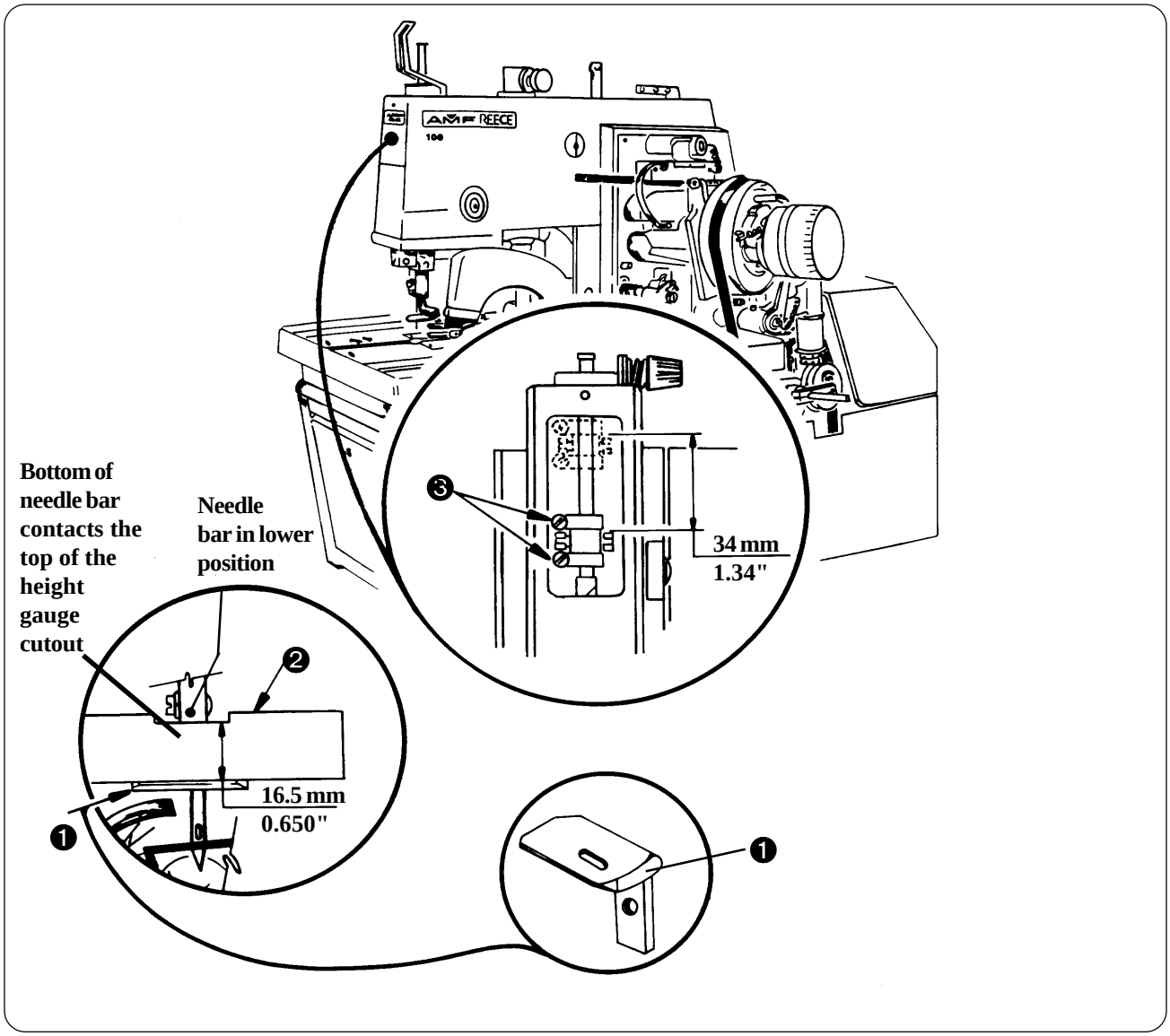

Revised 10/2005

e-mail: service@amfreece.cz ; parts@amfreece.cz; website: www.amfreece.com
Phones: +420 582 309 146 (Service), +420 582 309 286 (Spare Parts); Fax: +420 582 360 606

17. ADJUSTMENT OF THE LOOPERS TO THE NEEDLE

After setting of the loopers is necessary to adjust center puncture to the buttonhole axis. Differently adjust the needle bar by the machines S-100.052/053, see MACHINE ADJUSTMENT ROUND BUTTONHOLE - Differently position of the machine mechanisms S -100 - 052/053. The standard clearance between the loopers and needle is 0.05 to 0.1 mm, (0.002 to 0.004").

1. Manually rotate the right hand wheel and ensure the distance between the needle and each looper, as the needle passes the loopers at the closest point, are equal. Is suitable to check it on the both sides of the buttonhole.
2. It is possible to adjust the clearance after loosing the screw and turning the loopers forward or backwards to obtain the proper clearance. Then tighten the screw ❶.

The recommended clearance between the face of the needle and back of needle guard ❷ is between 0.05 to 0.1 mm, (0.002 to 0.004"). To adjust, bend the needle guard in or out as necessary in order to obtain the proper clearance.

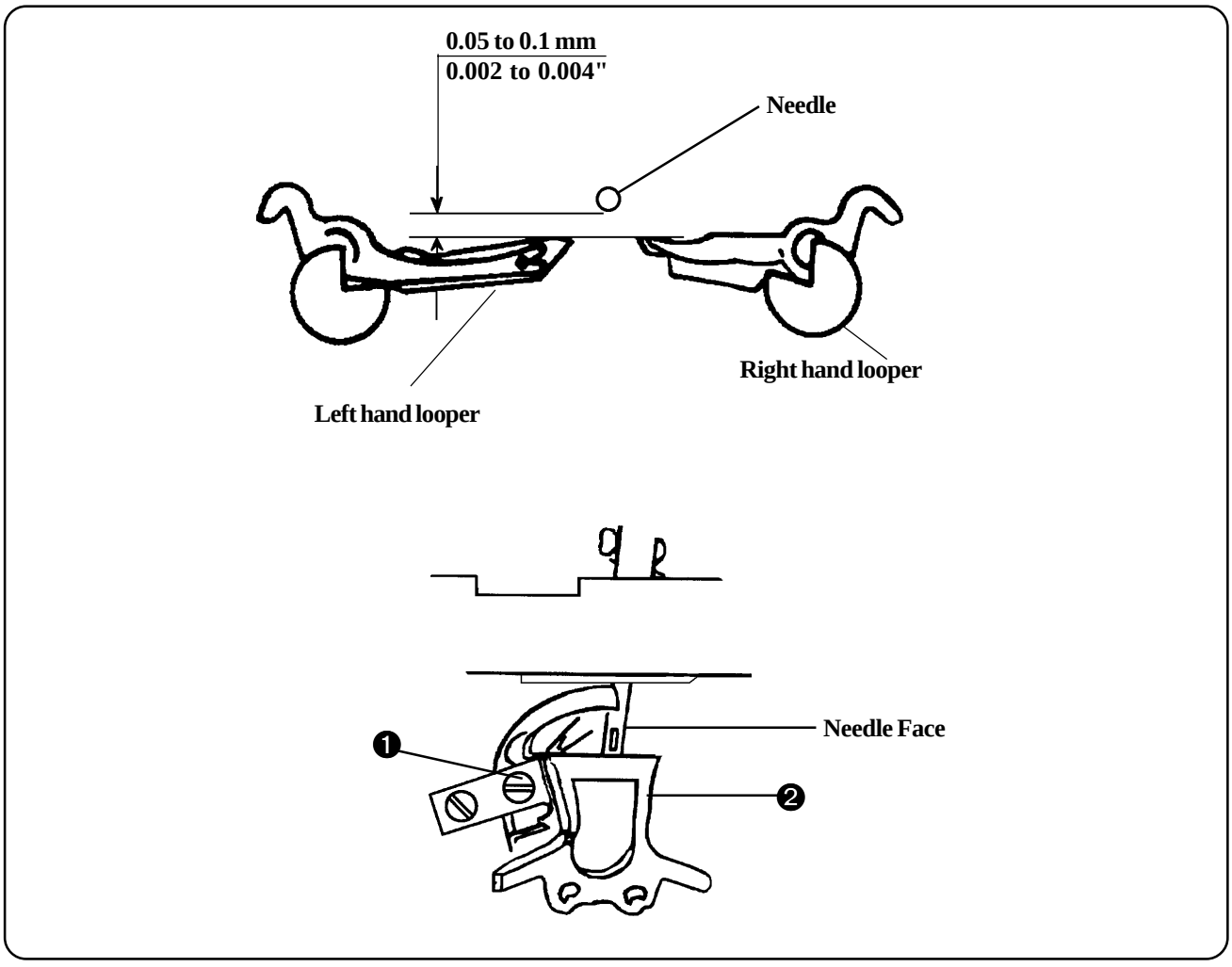

18. SPREADERS ADJUSTMENT

Install left ❶ and right spreader ❷, spreader stops ❸ and its springs ❹.
Left fork spreader adjust above the hole in the left looper ❺.
Inner side of right spreader adjust to the same level with appropriate inner side of the right looper ❻.
It is possible to do adjustment after loosing the screws of the stop ❼ by its swinging.
Check both spreaders operation and find if the spreaders do not catch the loopers or spreaders stops.
Check whether the loopers have axial clearance. If yes, define the clearance after loosing the screws of the spreader stops by shifting of the stops ❼.

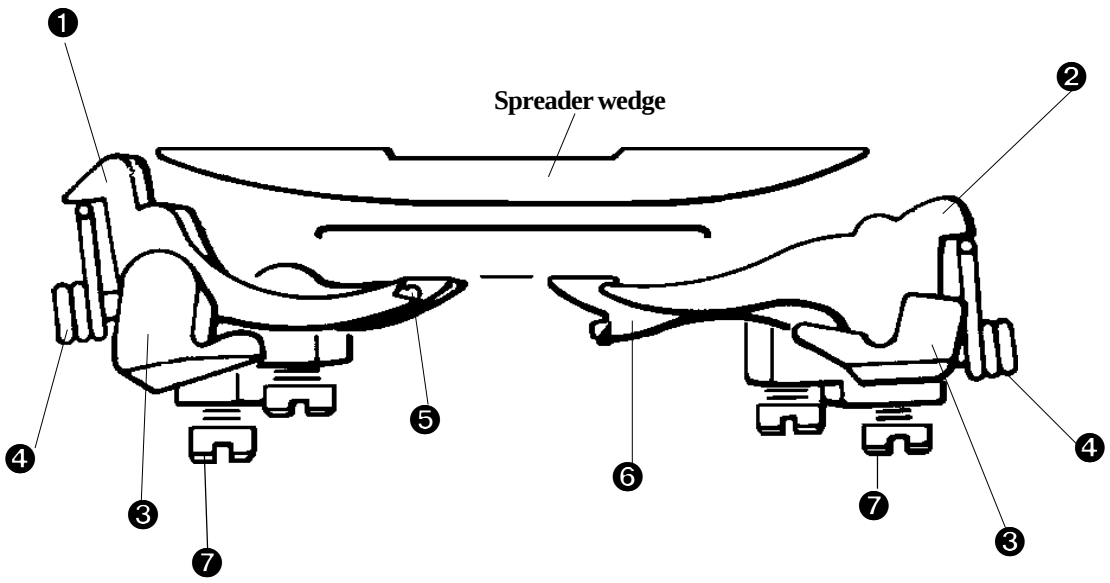

Revised 10/2005
e-mail: service@amfreece.cz ; parts@amfreece.cz; website: www.amfreece.com
Phones: +420 582 309 146 (Service), +420 582 309 286 (Spare Parts); Fax: +420 582 360 606

19. ADJUSTMENT OF THE LOOPERS MOVEMENT

Turn the left handle of the machine until the drive shaft is released. Turn the right hand wheel until the needle bar is in the lower position of the center puncture.
Lift the machine head and after loosing of the screws ❶ of the clutch is possible to turn by the sewing cam ❷ until the timing gauge lines are aligned, which determines the correct position of the loopers adjustment.

CAUTION! If there is no gauge line on the block, adjust the cam by the timing gauge line to the center of the block.

Tighten the screws ❶ .
During the machine control is possible to check this adjustment when the threads are threaded. The needle bar is in the lowest position, center puncture, timing gauge lines should be aligned.

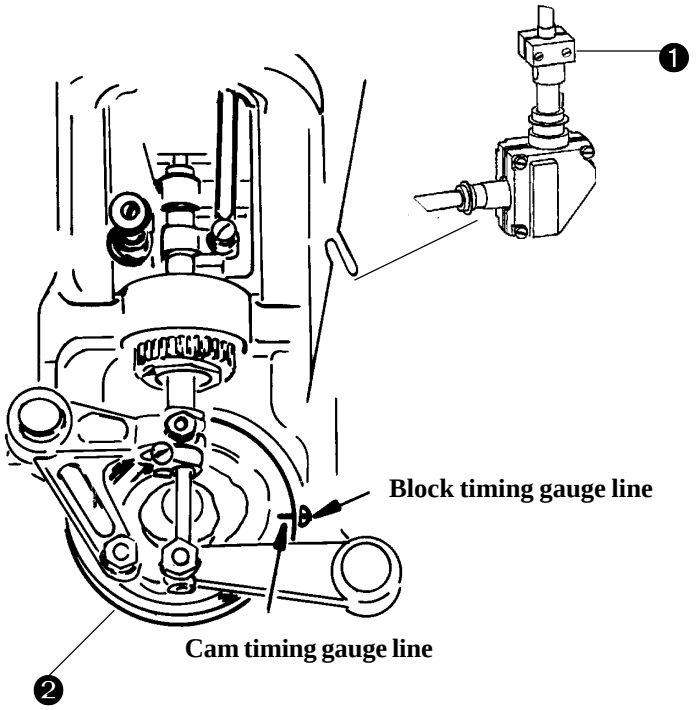

Rotate the right-hand wheel until the needle bar reaches the lowest point of the first needle bar stroke 3,3 mm (0.130"). The correct adjustment allow enclosed gauge located on the support. The point of the left-hand looper must be half way across the needle. Needle bar must lean on the highest point of gauge. Now it is necessary to loosen the screws ❸ and move the left-hand looper ❹ to the right or left, to bring the looper into the needle center line.

Tighten the screws ❸.

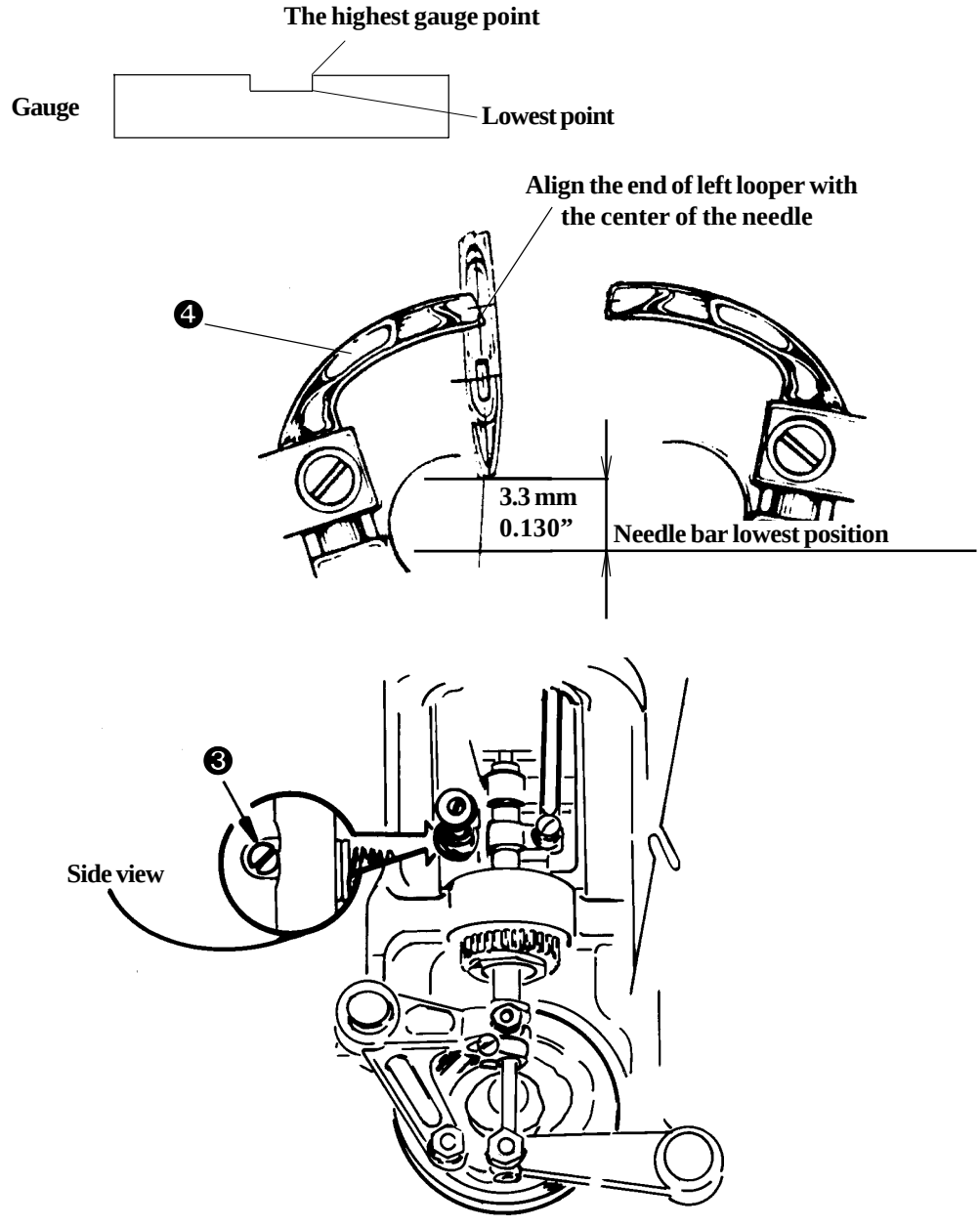

Note: Repeating the above mentioned steps is usual for reaching of the correct adjustment.

CAUTION! Using S 100 AMF Reece designed replacement parts, will ensure the best quality and highest production possible. The part numbers are listed in the Parts Section of this manual.

Revised 10/2005

e-mail: service@amfreece.cz ; parts@amfreece.cz; website: www.amfreece.com
Phones: +420 582 309 146 (Service), +420 582 309 286 (Spare Parts); Fax: +420 582 360 606

Rotate the right-handwheel until the needle bar reaches the lowest point of the vibrator stroke. After raising the needle bar 3.5 mm, (0.140"), note the position of the right ❺ looper point to the center line of the needle.

If the looper point is not to the center line of the needle, loosen the clip screw and move the right-hand looper half the distance to the needle center line, by this you align the distance of both loopers.
Tighten the screw.

Example: **Total distance is 4 mm - move the end of the looper toward the center of the needle 2 mm (0.079")**

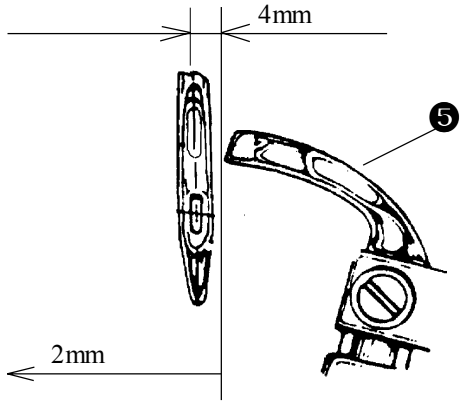

CAUTION! Check both needle bar strokes to ensure both sides are equal distance from the point of the looper to the needle centerline.

20. SETTING - UP OF THE SPREADERS MOVEMENT

It is necessary to adjust the spreaders so that the left and right spreader is opening and closing equally on the left and right, without contacting the needle.

Carefully loosen the spreader crosshead set screw ❶, located in the spreader spindle. ❷. It is necessary to hold the spreader crosshead ❸ to protect it against self adjustment by the pressure of the springs. Adjust the correct position.
Tighten the crosshead set screw ❶.

IMPORTANT! The right and left-hand spreader distances X, from the needle, must be equal.

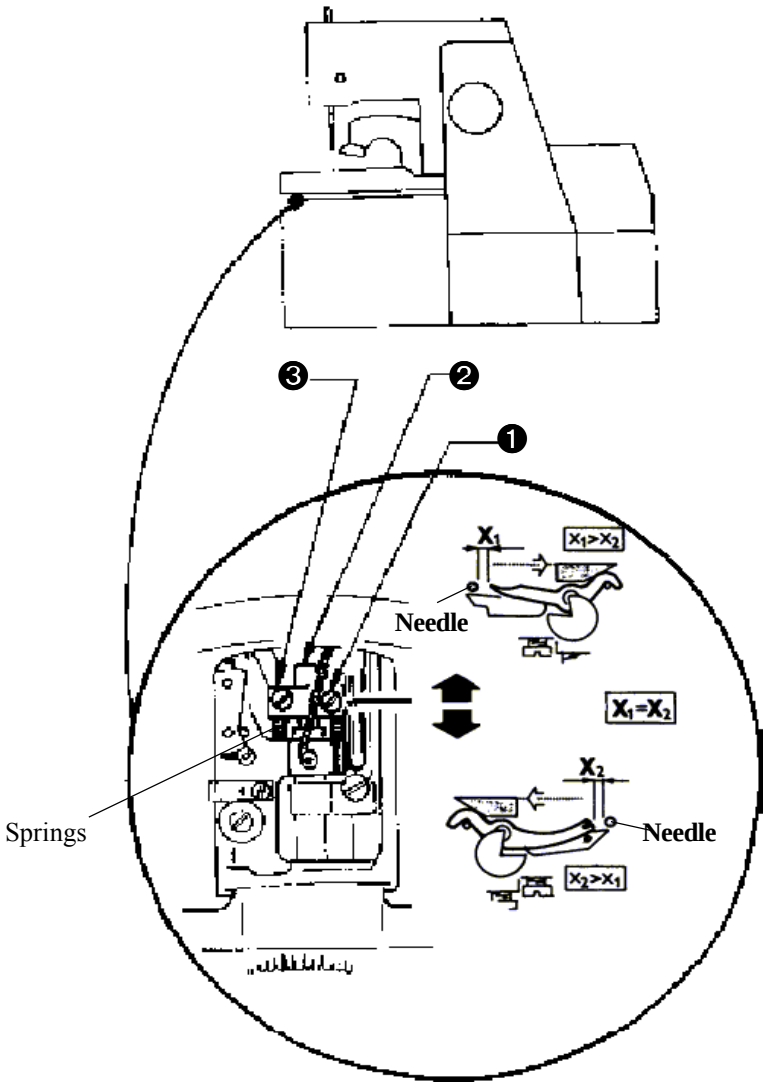

Revised 10/2005
e-mail: service@amfreece.cz ; parts@amfreece.cz; website: www.amfreece.com
Phones: +420 582 309 146 (Service), +420 582 309 286 (Spare Parts); Fax: +420 582 360 606

21. CUTTING LEVER AND ANVIL

1. Side adjustment of the cutting lever do with inserted knife after loosing the cutting lever studs locknuts ❶ and by moving the studs ❷ to the left or right, as needed.

2. Tighten the studs ❶.

Note : If the buttonhole cut looks like illustration **1**, rotate the studs ❷ to the right, if the buttonhole cut looks like illustration **2**, rotate the studs ❷ to the left.

3. After anvil adjustment ❹, insert the cutting knife.

4. Loosen the knife holder set screws ❹, and by holder ❺ shifting to the left or right, obtain the proper position of the lower knife.

5. Check by manual pressing of the cutting lever, if both knives have the same position.

6. After setting-up, do not forget to replace one of the knives by suitable cutting steel. Then tighten the set screws ❸.

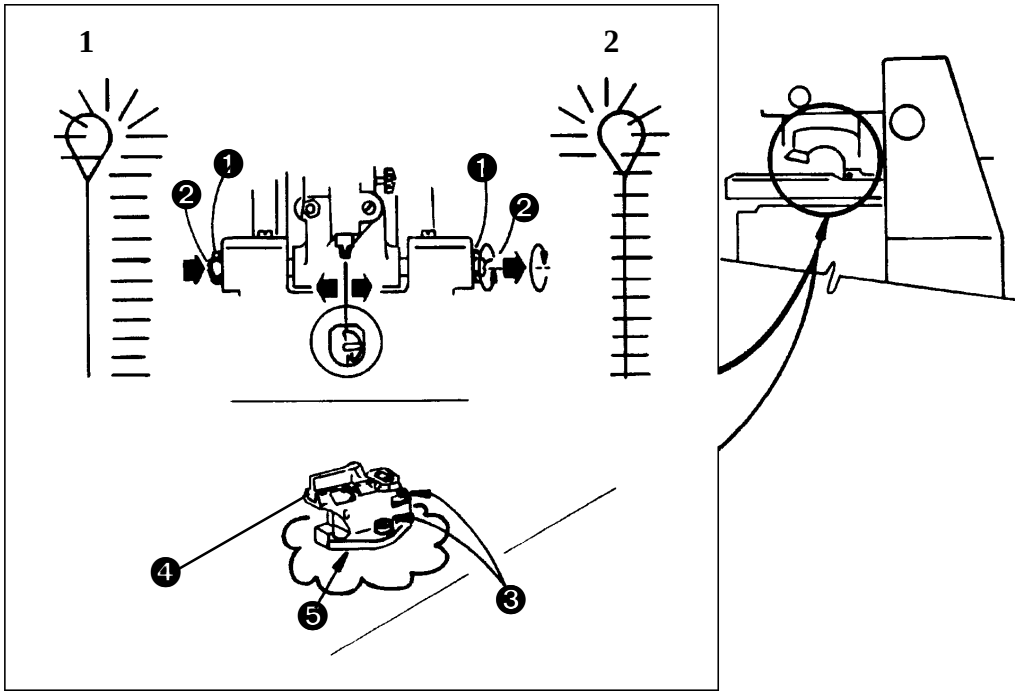

22. KNIFE AND CUTTING STEEL CHANGE

Various types of knives (straight buttonhole, cutting before and after sewing) and steels for machine S - 100 can be replaced.
It is possible to place the knife to the cutting lever and steel down or opposite.
It is possible to deliver below mentioned cutting knives and steels.

Length of buttonhole	Washers Length	Knives					
		3/5 CA-T	3/5 CA	3/5 CB-T	3/5 CB	O-T	O
10	19.0064.5.846	18.0087.0.407	18.0087.0.405	18.0087.0.408	18.0087.0.406	17.0064.6.325	17.0064.5.863
12	19.0064.5.847						
(13)	19.0064.5.951						
14	19.0064.5.848						
16	19.0064.5.849						
18	19.0064.5.850						
(19)	19.0064.5.952						
20	19.0064.5.851						
22	19.0064.5.852						
24	19.0064.5.853						
26	19.0064.5.854						
29	19.0064.5.855						
32	19.0064.5.856						
35	19.0064.5.857						
38	19.0064.5.858						

CAUTION! The cutting pressure must be adjusted when the cutting steel is replaced or the material being sewn changes. Cutting steel is changed according to the buttonhole length.

WARNING! Before doing any adjustment, switch off the main machine power and for the machine S - 100 CT disconnect the air supply and release any stored air in the machine. To obtain correct buttonhole cuts, perform each step of the following procedure. Failure to follow these steps may cause knife breakage and possible machine damage.

1. Remove the knife and cutting steel.
2. Ensure the contact surface of the cutting lever ❶ and the knife holder ❷ are not damaged.
3. Install the new cutting steel ❸ into the knife holder and install the new knife into the cutting lever and lightly tighten the knife locking screws ❹, ❺.
4. Manually lower the knife against the cutting steel to seat the knife in the cutting lever ❶ and fully tighten the knife locking screws ❹, ❺..
5. Manually lower the cutting lever toward the knife holder and ensure the knife and the cutting steel are correctly aligned.
6. Decrease the cutting lever pressure by rotating the pressure adjusting screw ❻ counter clockwise three revolutions. Steadiness of the intersection is suitable to find out by manual knife compression against cutting steel with inserted paper. Print must be even. It is not recommended to repair damaged knife. Cleaning of the cutting steels must be done by machine grinding or by soft emery paper. Any grooves can cause dirty fabric intersection.

e-mail: service@amfreece.cz ; parts@amfreece.cz; website: www.amfreece.com
Phones: +420 582 309 146 (Service), +420 582 309 286 (Spare Parts); Fax: +420 582 360 606

7. Then position a piece of fabric between the knife and the cutting steel and cycle the machine and check the cut of the fabric. The cut must be even and can not be discontented through the whole length. If is it incorrect, rotate the pressure adjusting screw ❻ one revolution clockwise only, cycle the machine and check the cut. Increase the adjusting screw pressure one revolution at a time until a correct cut is obtained.

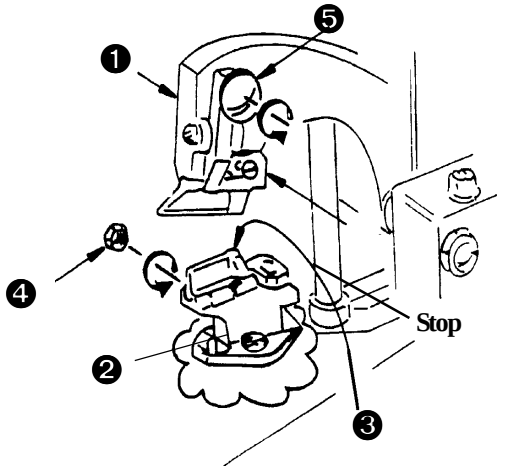

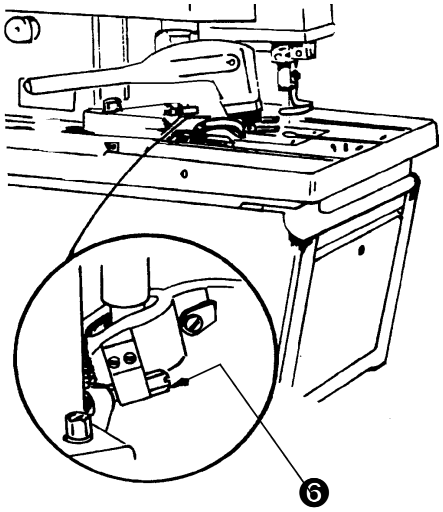

23. CUTTING SPACE MODIFICATION

Change of the stitches rows position, increase or decrease the cutting space, it is used especially when the cutting before is changing to the cutting after.

1. Loosen the nut ❶.
2. Turn the eccentric ❷ clockwise for the more cutting space, as illustrated in example **2** of anti-clockwise for less cutting space, as illustrated in example **1**.
3. Tighten the nut ❶.

Note: When the change of the cutting space is performed, it can be necessary to do loopers adjustment, or upper thread trim knife adjustment.

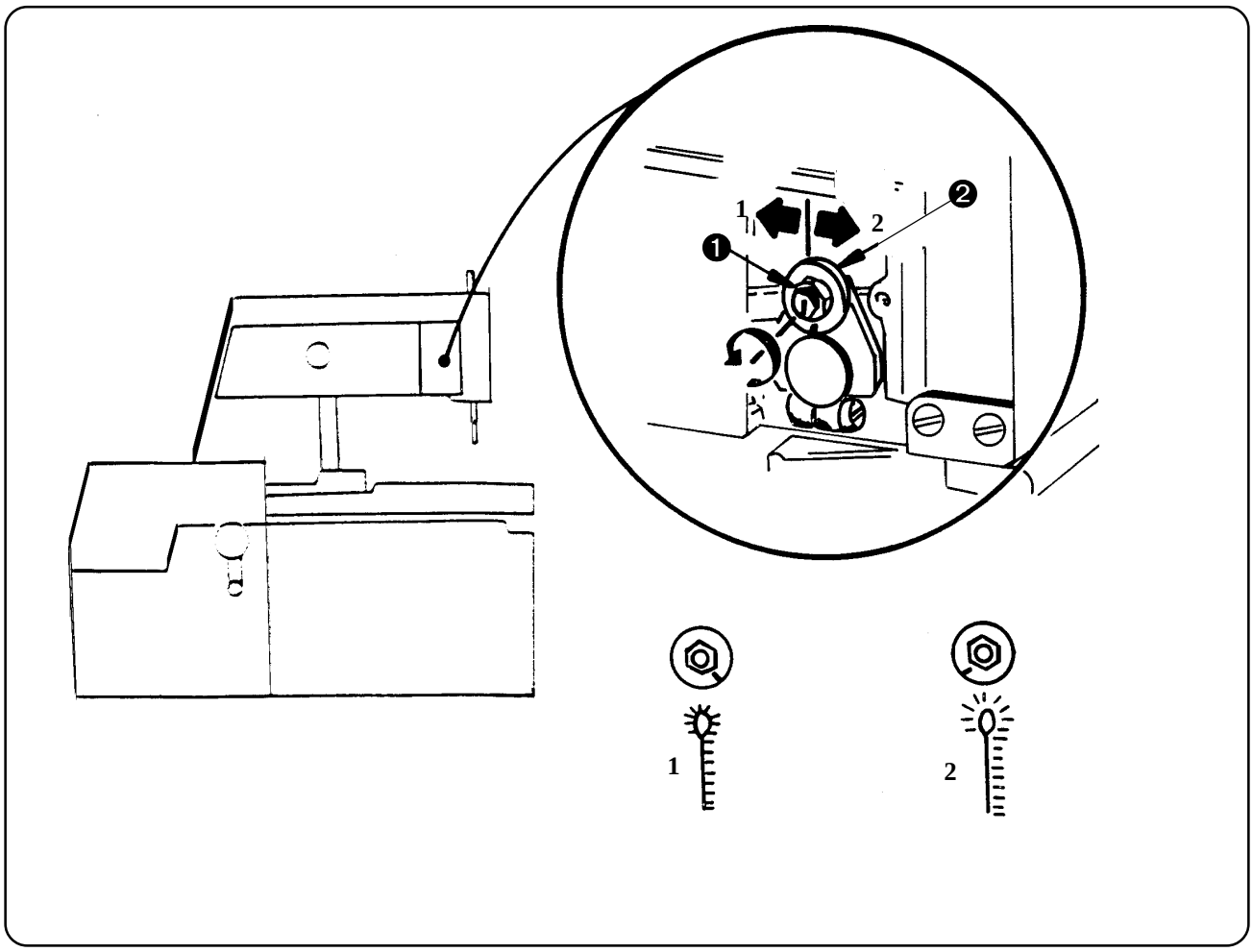

Revised 10/2005

e-mail: service@amfreece.cz ; parts@amfreece.cz; website: www.amfreece.com
Phones: +420 582 309 146 (Service), +420 582 309 286 (Spare Parts); Fax: +420 582 360 606

24. CUT BEFORE AND CUT AFTER

Ensure the change by two functional components, after loosing the locking nut ❶ above and screw of the feet control lever ❷ down and by shifting in grooves in direction to the marked stops as needed, CA is cutting after and CB is cutting before. The stop screws are ensured by the color. Without serious reason, do not manipulate with position of the stops.
Loosen the two locking components ❶, ❷.
After rearrangement is necessary to twice mechanically tests the machine cycle (without sewing) - the first cycle is usually incomplete.

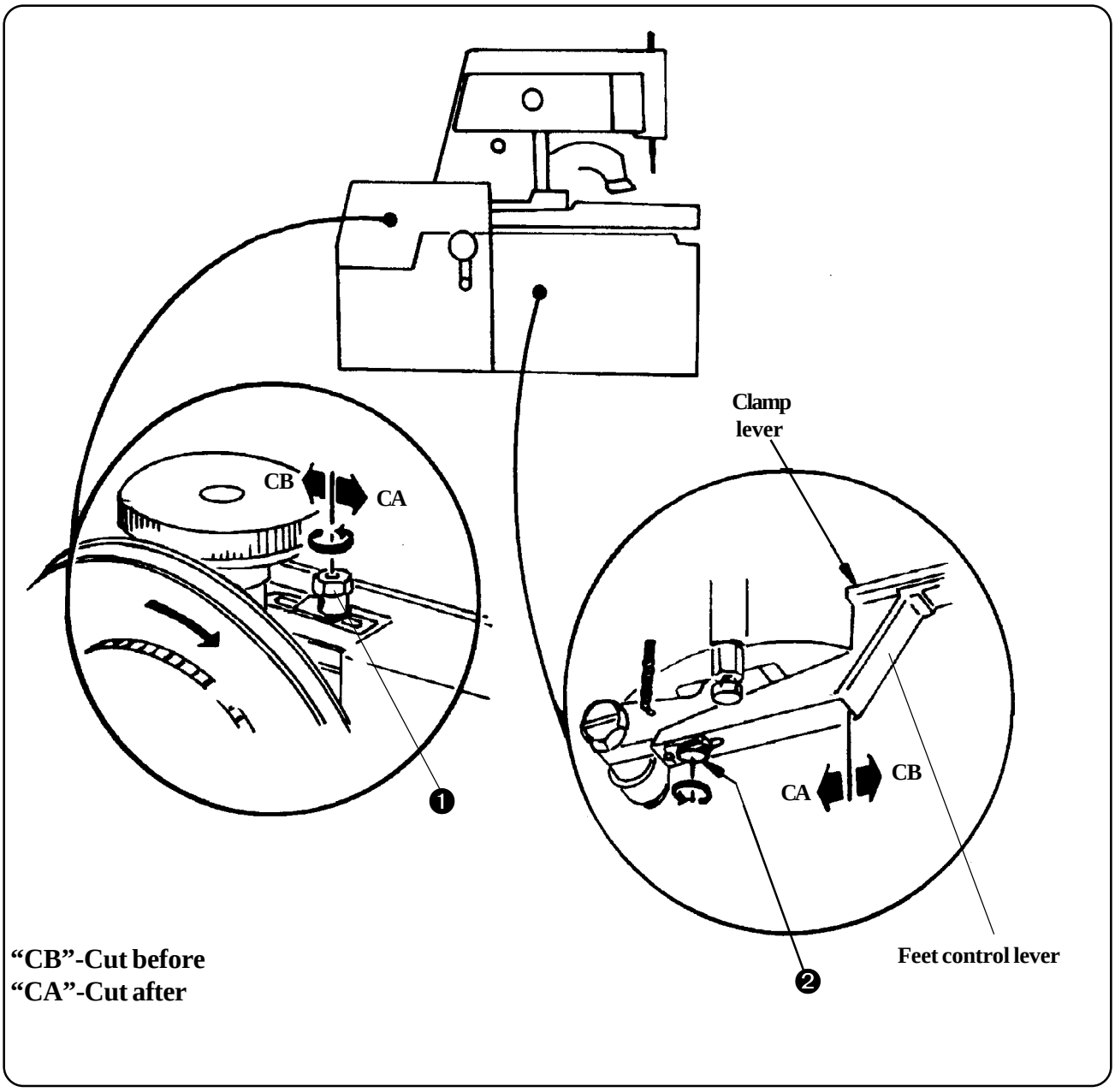

"CB"-Cut before
"CA"-Cut after

25. KNIFE ADJUSTMENT FOR UPPER THREAD TRIM

1. After repeatedly mounted holder with thread knife ❶ loosening the knife travel nut ❸, set the thread trimming knife height to reach the clearance 0.1 to 0.15 mm, above the right side spreader ❹.

2. The basic angle of set cutting knife ❶ adjust by scerw ❷, so taht the left side of the knife is covered with right side of the throad plate ⓰.

3. The knife position ❶, required for catching the upper thread loop, can be changed after loosening the screw ❺, so that the knife edge is 0,9 mm from the needle ❻. When the knife position is changed it is necessary to check the height emendation to preserve the clerance - see ***article 1.***

4. The knife end position ❶ is limited by stop screw ❼ so that the cutting knife ❶ does not toutch upper thread by itself tip.

5. The initial position of the control lever ⓱ adjust to the space in range 0,2---0,3 from the stud ⓲ by screw ⓳ after loosen ing its nut.

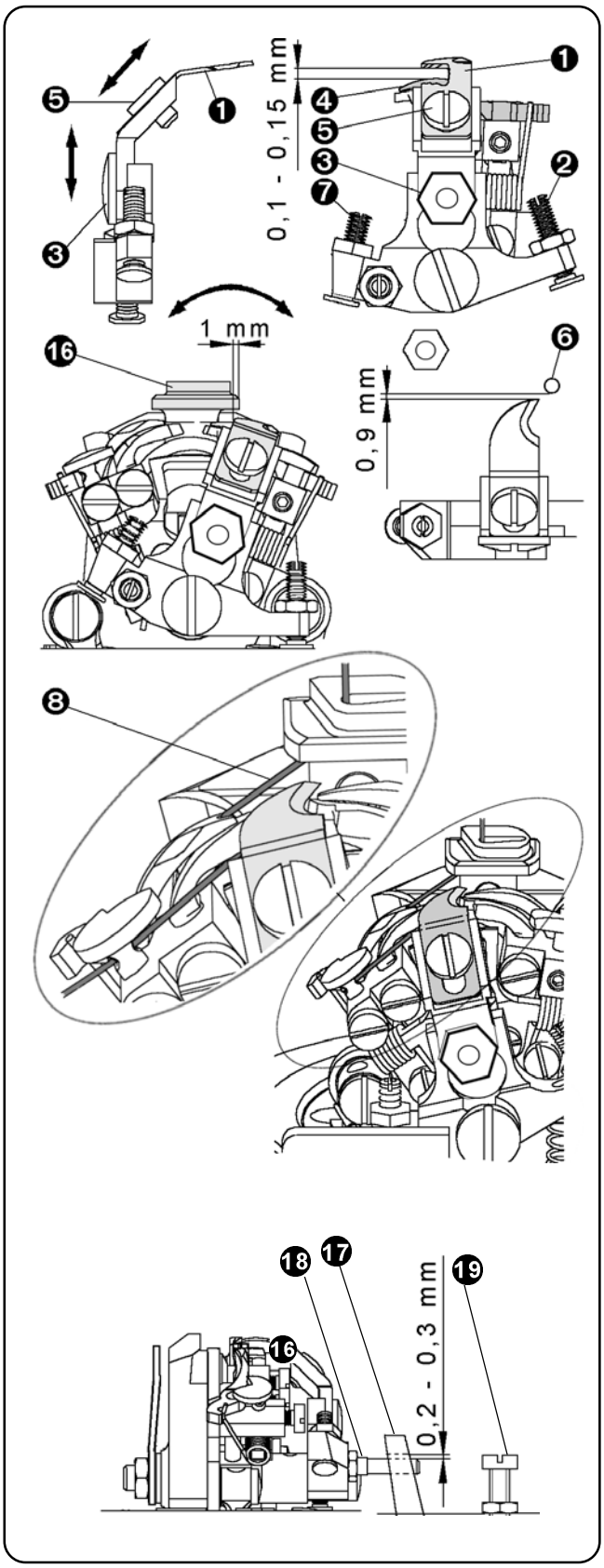

Revised 10/2005

e-mail: service@amfreece.cz ; parts@amfreece.cz; website: www.amfreece.com
Phones: +420 582 309 146 (Service), +420 582 309 286 (Spare Parts); Fax: +420 582 360 606

6. To adjust the actuator ❾, loosen the actuator adjusting screw ❿, then move the end position of the thread trimmer knife until the point of the knife passes the point of the right - hand looper, measured during the moment the actuator passes over the pawl ⓫ so that is between lever ⓬ and throated trimming knife arm ⓭ clearance 0,0 mm to 0,1 mm (0,0" to 0,004"), see picture 3. Tighten the screw ❿.

CAUTION ! The knife screw stops eliminates the risk of trimming the lower thread by limiting the range of the trimming knife motion, see picture 3.

7. Time the thread trimming by sliding the actuator holder ⓮ The basic adjustment 11,5 mm to 12,0 mm (0,450" to 0,470") is obtained in the initial machine stop position. This adjustment corresponds to the buttonhole length limit of 32 mm, (1,260"), adjusted by moving the holder lateral stop ⓯- see picture 2.

Picture 2

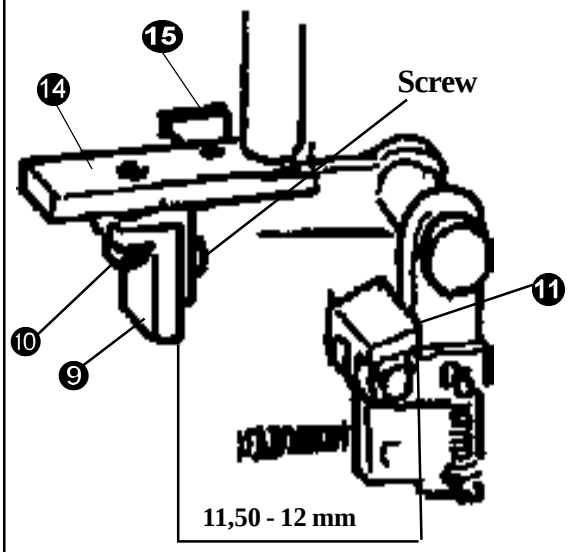

Picture 3

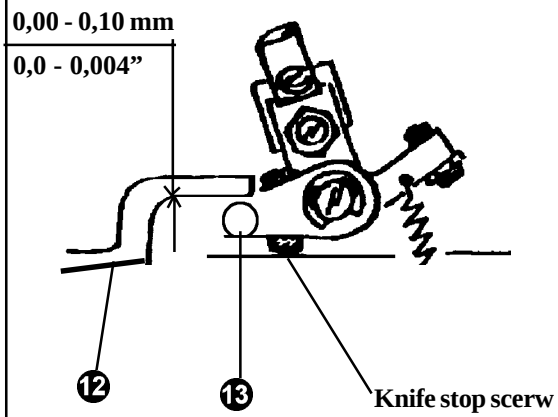

0,450 -0,470"

26. THREAD DRAW OFF MECHANISM

1. Basic position of the lever ❶ of the upper thread draw off is adjusted after loosing of the arresting screw ❷.
2. Measure of the upper thread draw off is adjusted by means of stop screw ❸ on the rod controlled by the cutting lever movement, which is manually shifted to the lower position. To protect the thread falls out of the needle, the thread can only be loosen after its clamping by the pin ❹.

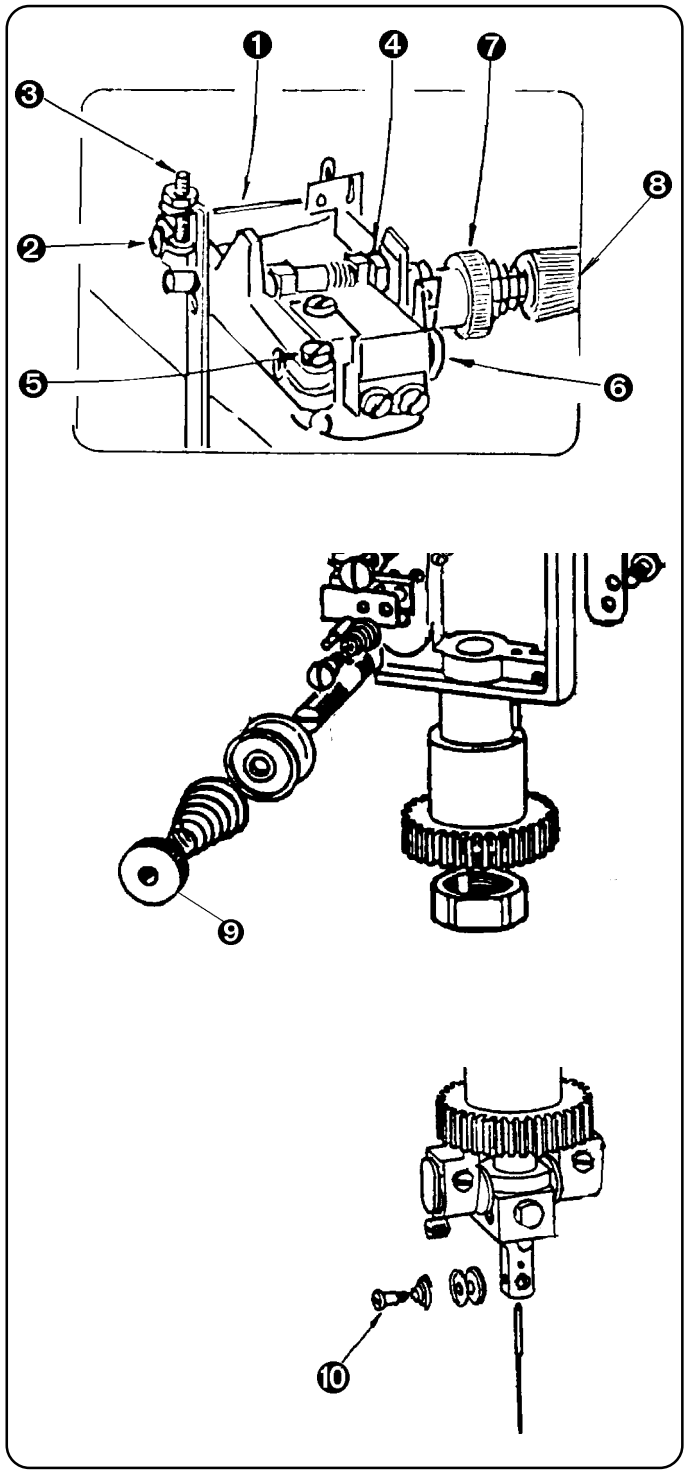

Remember:

Inadequate thread draw off causes stitches missing in the beginning of the next button hole sewing. Excessive thread draw off causes extension of the thread end in the beginning of the cycle.

3. If the spring, which control the return of the lever for the upper thread draw off, do not prove the lift the lever to the upper position, is necessary to loosen the clamping screw ❺ and turn the sprung stud ❻ for increase of the pressure of the returnable spring.
4. For attainment the same length of the trimmed thread ends, use the nuts of the constant thrust ❼ for setting-up of the cutting tension for needed value 50 - 70 kg. When the tension is excessive, the last stitch unravels. Excessive loosen nut causes that the spring of the thread tension is not functional.

Note : The regulating nut ❽ is for the operator use, the constant trust nut ❼ is adjusted by the manufacturer, so that it is not necessary to adjust it further.

5. By turning the regulating nut ❽ clockwise the thread tension will increase.
6. By turning the regulation nut ❽ counter clockwise, the thread tension will decrease.

Draw the nut to sew hard materials (jeans), and loosen the nut to sew soft materials.

Using the nut ❾ on the race, is possible to affect the thread tension.

The soft tension ❿ on the needle bar is partially affecting loop tightening on the looper.

e-mail: service@amfreece.cz ; parts@amfreece.cz; website: www.amfreece.com
Phones: +420 582 309 146 (Service), +420 582 309 286 (Spare Parts); Fax: +420 582 360 606

E - MACHINE ADJUSTMENT FOR ROUND EYE

1. INTRODUCTION

The S 100 - 052 & -053 are two thread or single thread, round eye machines, used for decorative round holes in materials up to 6 mm thick, such as round holes in capes and cap vent holes.
The S 100-052 & -053 offer a stitch density of 15 to 40 stitches per hole. Standard width of the sewn buttonhole by the machine S 100-052 is from 2.00 to 4.00 mm and by the machine S 100-053 is from 3.5 to 7.00 mm. In addition to the standard Cut After sewing, both style machines are capable of Cut Before sewing.

In the next passages of the instruction are only instructions, which are different from basic type of the machine S -100.030 and also using of the some parts supplied in accessories of the machine, such as:
a) left looper and spreader for single thread chain stitch - see section ***E 6***.
b) upper disc of the needle bar for bigger thread draw off

2. DIFFERENT POSITION OF THE MACHINE MECHANISMS S 100-052/053

Only some of the machine mechanisms have different function, than basic type of the machine. To these mechanisms belong mechanism for change of diameter of round buttonhole, which replaced mechanism for change of the position of the buttonhole sewing - see below. Also mechanism for fabric tightening is not used there - fabric for sewing is stretching by special contruction of round clamp feet..
Mechanism of the sewing control and stopping mechanism have control derivation from main cam, instead of standard control from the machine table - see next chapter.
Turning mechanism, when the machine is in home position, has both gear segments symmetrically to the lengthwise machine axis, as distinct from position of the segments, which are described in chapter MACHINE ADJUSTMENT - Table alignment.
In home position of both machines the locating pin of lateral cam driver heads for machine operator during the cutting after. The lateral cam has a mark or machine in home position.
During the adjustment of loopers, throw out of parallel the needle type S 100 - 052 1,2 from the center, and about S 100 - 053 2.4 mm from the centre of the throat plate. Then do the same adjustment as it is described in chapter MACHINE ADJUSTMENT - Setting-up of the loopers to the needle.

e-mail: service@amfreece.cz ; parts@amfreece.cz ; website: www.amfreece.com
Phones: +420 582 309 146 (Service), +420 582 309 286 (Spare Parts); Fax: +420 582 360 606

3. STOP MOTION CONTROL

With the machine in the home position, using the adjustable screw ❶, set the gap 0.1 to 0.2 mm, (0.004 to 0.008"). Loosen the brake shoe locking screw ❷ and adjust the brake shoe ❸ and the right-hand stop wheel ❹ clearance to 0.25 mm, (0.010").

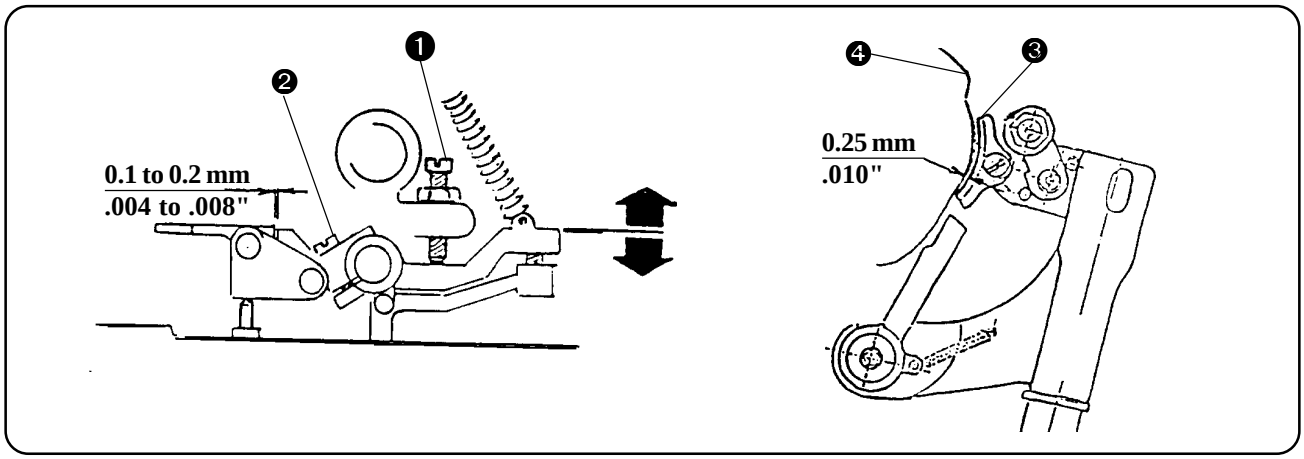

Using the control screw, adjust the gap bolt to 0.4 mm, (0.016").

To adjust the sew start mechanism, loosen the first stitch screw **1** and correctly position the sewing mechanism. Adjust the last stitch screw **2** to obtain the normal correct setting for the last stitch. The normal correct setting for the last stitch, is to sew 2 or 3 stitches
over the first stitch, to ensure the eyelet will not unravel.

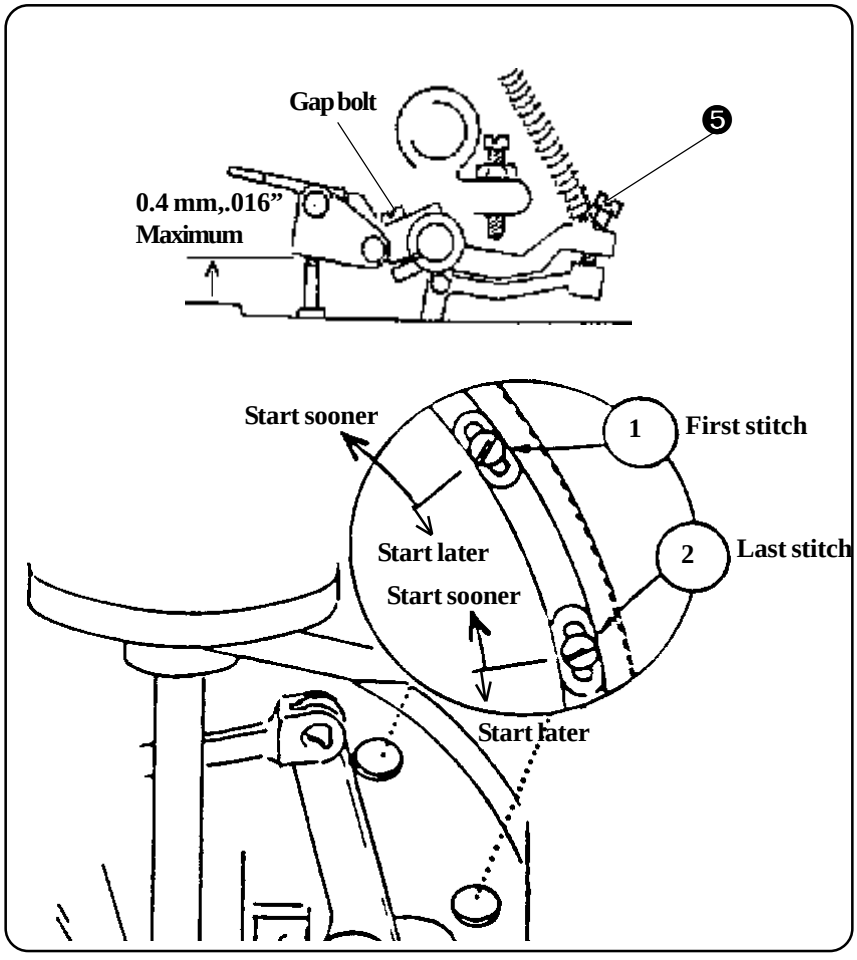

Revised 10/2005
e-mail: service@amfreece.cz ; parts@amfreece.cz; website: www.amfreece.com
Phones: +420 582 309 146 (Service), +420 582 309 286 (Spare Parts); Fax: +420 582 360 606

E - MACHINE ADJUSTMENT FOR THE ROUND EYE

4. ROUND EYE MACHINE EYELET DIAMETER OF CUTTING SPACE CHANGE

To alter the eyelet diameter, without affecting the stitch bite, loosen the locking screw ❶ and rotate the eccentric adjusting screw ❷ to the left 1 or right 2, as needed. Rotating left, decreases the diameter, rotating right increases the diameter.

CAUTION! If a significant eyelet diameter change is performed, ensure the cutting knife and cutting block are correct. Check the looper / spreader adjustment and reset if needed. Before sewing large diameter buttonholes, manually rotate the handwheel to ensure the needle is not contacting the throat plate. By every machine is mentioned, what is the biggest possible diameter of the buttonhole which can be sewn on the machine if is not performed the change of standardly supplied round foot configuration.

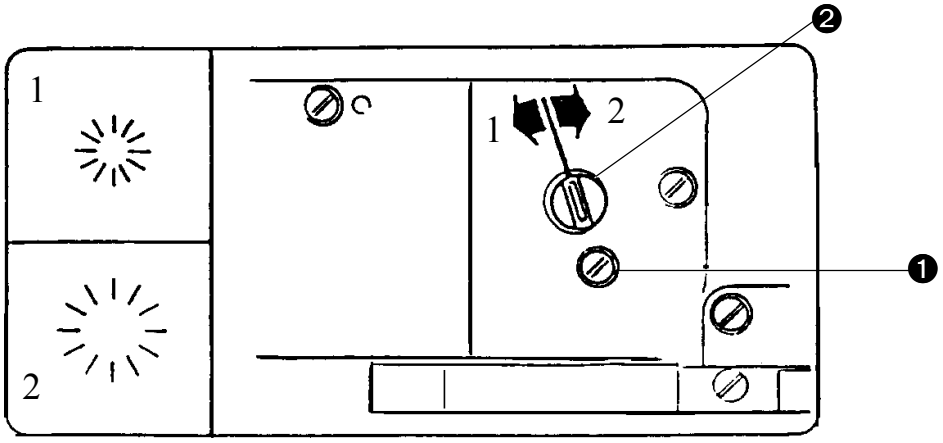

5. CLAMP FEET USING FOR CORRECT BUTTONHOLE SEWING

The machine is equipped by the special round feet. The figure explains principle and construction of these feet.
For sewing bigger diameter buttonholes is necessary to use another size of foot and cutting steel. The rule is so that external sewn diameter of the buttonhole D was at least 2 mm smaller then external diameter of the foot. Combination suitable feet and plates for thin or thick materials with standard bite size 2,4 mm (0.094") is mentioned in table below.

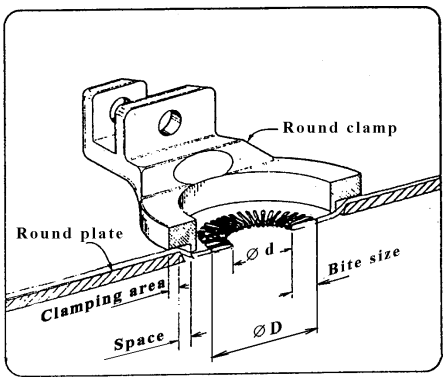

Type	Size of the hole	Knife	Thin materials		Thick materials	
			Clamp	Plate	Clamp	Plate
052	1,5	17.0042.6.087	10.2552.2.004	10.2559.1.004	10.2552.2.104	10.2559.1.104
	2	17.0042.6.088				
	2,5	17.0042.6.089				
053	3	17.0042.6.090	10.2552.2.104	10.2559.1.108		
	3,5	17.0042.6.086				
	4	17.0042.6.082	10.2552.2.010	10.2559.1.006	10.2552.2.106	10.2559.1.106
	5	17.0042.6.083				
	6	17.0042.6.084	10.2552.2.010	10.2559.1.010	10.2552.2.010	
	7	17.0042.6.085				

E - MACHINE ADJUSTMENT FOR THE ROUND EYE

6. ADJUSTMENT OF THE SUPPLIED ACCESSORIES

This is used for machine rearrangement for one thread sewing.
Especially by the smaller buttonholes, you appreciate the possibility of sewing by one-thread chain stitch after changing of the left looper with hole and spreader in supplied parts (without hole in looper and with spreader without fork).
The adjustment will be done according to the section MACHINE ADJUSTMENT - Loopers adjustment.
The upper disk ensures enough thread is supplied to correctly start the next eyelet buttonhole. Fit it instead of standardly fitted needle bar terminal.

Adjust the disc after loosing the nut and rotate the disc clockwise to decrease the amount of thread supplied, or anti-clockwise to increase the amount of thread supplied.
Tighten the nut.
Thread the thread as illustrated.

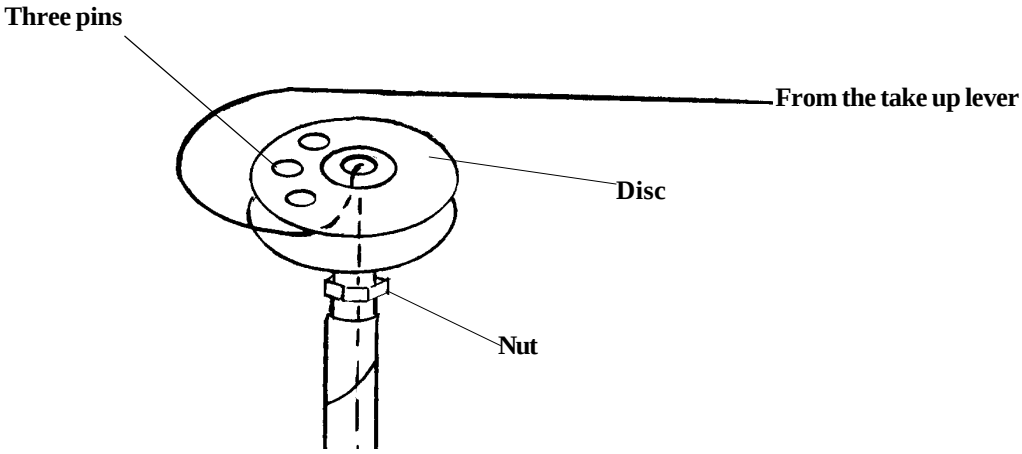

CAUTION! By the earlier supplied machines with separated feet was necessary to screw the thread sweeper on the right feet holder, as illustrated.

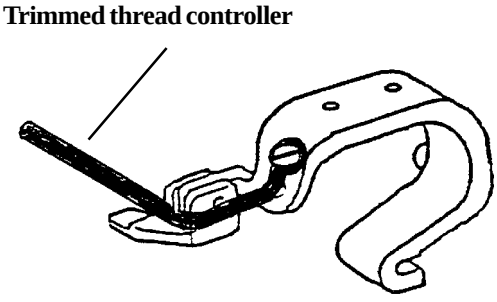

Revised 10/2005
e-mail: service@amfreece.cz ; parts@amfreece.cz; website: www.amfreece.com
Phones: +420 582 309 146 (Service), +420 582 309 286 (Spare Parts); Fax: +420 582 360 606

F - MACHINE ADJUSTMENT - CROSS BAR

1. INTRODUCTION

The S 100-060 are two threads or single thread machines with decorative chain stitch. Used for cross bar sewing buttonholes on the slacks, suits atc.
The stitch density is from 6 to 16 stitches per 10 mm in the buttonhole. Standard width of the sewn buttonhole is from 2.5 to 4.0 mm. In addition to the standard Cut After sewing the machine is able to Cut Before sewing.

In the next passages of the manual, are only instructions, which are different from basic type of the machine S 100.030.
With this machine is ordinary supplied the left looper and spreader for single thread chain stitch - see section ***E 6***.

IMPORTANT WARNING ! The machine S 100-060 was tested by the manufacturer. During the testing were removed all possible collisions of parts occasioned by the machine operator. To guarantee correct machine functions, it is necessary to follow next chapters of adjustment.

2. DIFFERENT POSITION OF THE MACHINE MECHANISMS S 100-060

Only some of the machine mechanisms have different function than the basic type of the machine.
It is the main cam mechanism for the table movement, the cam mechanism for the side movement of the bedplate and fly bar density mechanism.
The machine has another mechanism for the cross bar sewing.

3. CROSS BAR RELATIONSHIP TO THE FIRST AND SECOND ROW OF STITCHES

WARNING ! The cross bar relationship to the first and second row of stitches is adjusted by the manufacturer and it is not necessary to adjust it.

1. Remove the right side cover ❶ and tilt the rear cover.
2. Loosen the nut ❷ and turn the screw ❸.
3. Check the correct function.
4. When the cross bar is sewn, the feeding lever ❹ must move in vertical direction only, and can not move with lever ❺ in transversely direction. It ensures the movement of the block ❻ in the groove of the lever ❼ so that the groove is parallel to the lengthwise movement of the feeding lever ❹.
5. Repeat this process to adjust it.

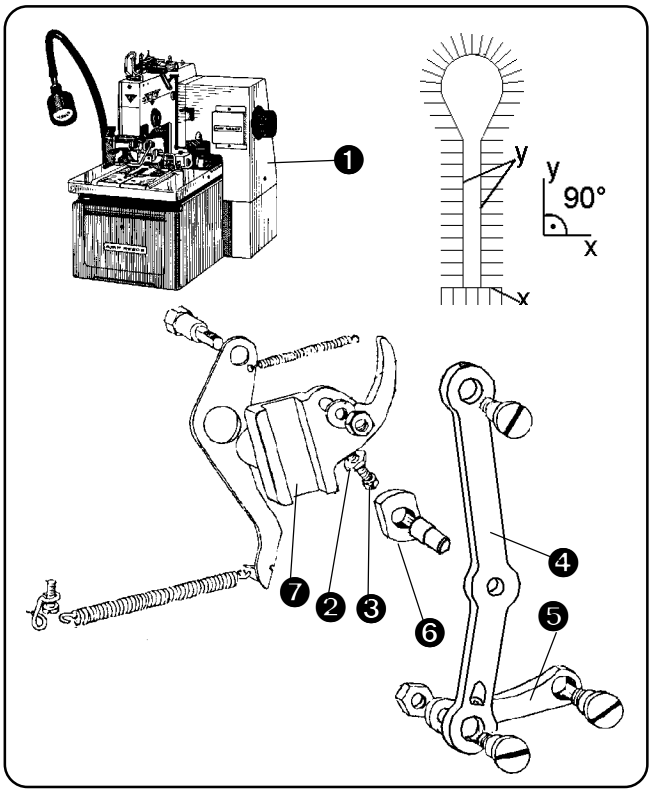

F - MACHINE ADJUSTMENT - CROSS BAR

4. DEVICE FOR SEWING THE CROSS BAR

The mechanisms for sewing the cross bar adjustment

1. Remove the side cover and tilt the rear cover.
2. Loosen the nut ❶ and using the screw ❷ adjust the lever ❸, to obtain the clearance 1.5 mm between the lever ❸ and the cam ㉟.
3. Using the hand crank move the table to the rearward position from the operator. The lever ❺ in this position, must be lifted, so that the pawl ❻ falls behind the top of the lever drive ❸ in direction to the operator. The clearance 0.5 - 1 mm should be maintained between the pawl ❻ and the top of the lever ❸.
4. The lifting of the lever ❼ is ensured by jack ❽. After loosening the nut ❾, it is possible to change the position of the jack ❽ by screw ❿. When the lever ❺ pressed, keep the clearance 1 mm.

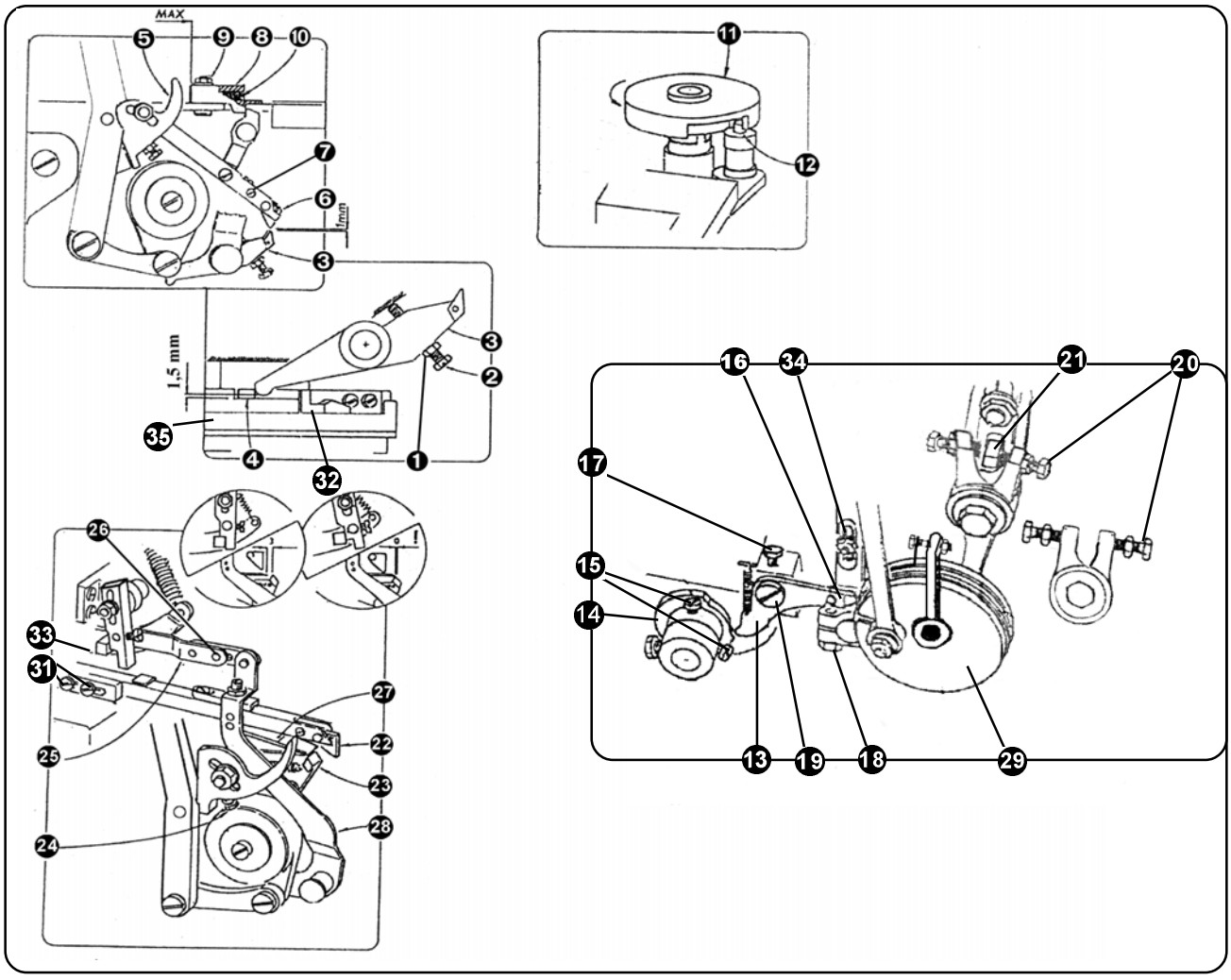

Revised 10/2005
e-mail: service@amfreece.cz ; parts@amfreece.cz; website: www.amfreece.com
Phones: +420 582 309 146 (Service), +420 582 309 286 (Spare Parts); Fax: +420 582 360 606

F - MACHINE ADJUSTMENT - CROSS BAR

5. Adjustment of the cam 14 and the lever 13 perform only after the buttonhole eye is adjusted - see chapter ***D 9. Use*** the hand crank turn the cam 11 so that the pivot 12 is still in the travel of the cam. This is the position, when the eye of the buttonhole was just sewn. At the same time, the lever 13 falls to the cam recess 14 and ensure the pivot 16.
6. Check before the eye of the buttonhole is sewn, if the cam and lever 13 loosened the pivot 16 and allows the side movement of the table. Loosen the screws 15 and perform the angle adjustment of the cam 14 . After the lever slot 13 falls on the pivot 16 tighten the screws 15 .
7. In the position when the buttonhole eye was just sewn = before the second row of buttonhole will be sew, and the pivot 12 is located in the slot 11 adjust the clearance between the screw 20 and the lever boss 21 .
   In the moment, when the sewing mechanism is turned by 90° (during the sewing cross bar), it is necessary to keep adequate clearance between main cam brake in the cam case and roller turning lever. If the clearance is not appropriate, enlarge the clearance between the screw 20 and lever boss 21.

Sewing the cross bar

1. Lead the machine to the position, when the stop 4 on the cam 35 is unlocked by latch 22 over the support 23 and lever 3. The lever 5 is leaning on the screw 24. This is an appropriate position of the machine to adjust the length of the first and second row of the buttonhole.
2. ***Setting the length of the first and second row of buttonhole***
   Loosen the screw 31 and move the arm with latch 22.By moving it backwards from the operator, to decrease the length of the **second** row of stitches (picture **1 b).** By moving it forward in direction to the operator to decrease the length of the **first** row of stitches (picture **2 a**). Correct adjustment is shown on the picture **3**.

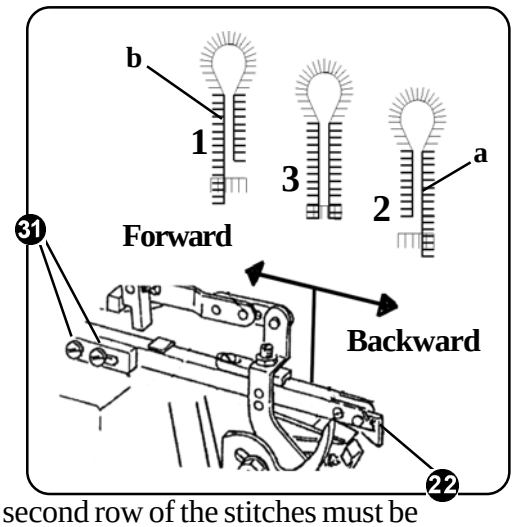

   Note:
   - If cutting before sewing the buttonhole is used, make sure that the stitches of the cross bar will not impinge to cut part of the buttonhole (it depends of the length of the buttonhole and used cutting mat)
   - If cutting after is used, make sure that the cross bar stitches will not be cut.
   - the stitches at the beginning and at the end of the first and second row of the stitches must be sewn up by the cross bar.
3. The drive 32 will ensure the stop of the sewing - the cam 29 is turned by 360° and the drive lift the lever 28 and the rod 25 loosen the block 33 of the stopping mechanism. The driver 27 on the lever 28 must be set to obtain extruding the support 23 by the latch 22 during the sewing the cross bar. 25 It loosen the cam and sewing the cross bar. It is necessary to ensure loosening of the block of the stopping mechanism in the moment when the lower part of the lever 28 is on the top of drive 32. Loosen the screw 26, move the rod 25 and then perform the adjustment.

F -MACHINE ADJUSTMENT - CROSS BAR

5. READJUSTMENT OF THE MACHINE S 100 - 060 (CROSS BAR) TO THE MACHINE S 100 - 030 (WITHOUT BAR)

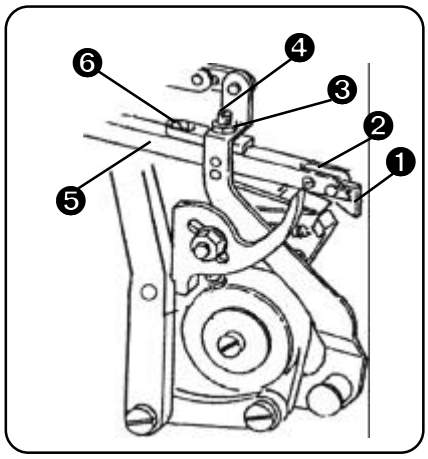

1. Lift the pawl ❶ and remove the stud from the eye of the spring ❷. Loosen the nut ❸ and tighten the screw ❹, so that after the drive ❻ travel on the rod ❺, the block of the stopping mechanism will be reliable loosen.

2. To adjust an equal length of the first and second row of stitches, loosen the screw ❻ and shift the drive ❺.
   If the second row of stitches is longer, move the drive backwards (in direction to the operator), if is the second row of stitches shorter, move the drive forward to the operator.

6. READJUSTMENT OF THE MACHINE S 100 - 060 (CROSS BAR) TO THE MACHINES 100 - 030 (FLY BAR)

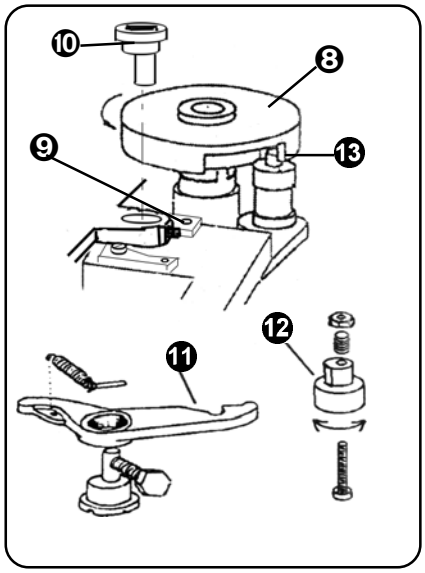

1. At first, disable the cross bar sewing mechanism according to chapter ***G 6***.

2. Replace the cam ❽ for the cross bar sewing, to the cam from the accessories, as needed (with eye, without eye, and with needed length).

3. Replace the cam - according to chapter ***D 5*.**

4. Use the eccentric stud ⓬ to move the lever ⓫ to the position, when is the lever ⓫ prevent from movement.
   The lever is lifted.

CAUTION! Make sure, that the knifes, washers and cams are always in harmony.

7. HAND FEEDING

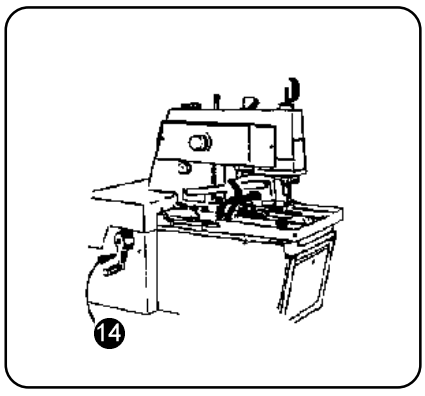

It is possible to remove the hand crank drive ⓮ on the machine S 100 - 060 which is different from the other machines.
The hand crank drive is not serve for the operator, but for the mechanic use only.

CAUTION! During the sewing the cross bar is the hand stop sewing lever ⓮ locked for use, at the beginning and at the end of sewing, when the cycle of sewing cross bar cannot be interrupt. So in case of necessity to stop the sewing, stop the machine by foot pedal. Remove the fabric before it is cut, and by short squeeze of the stopping lever, interrupt the sewing and press the foot pedal to finish the cycle by motor.

Revised 10/2005
e-mail: service@amfreece.cz ; parts@amfreece.cz; website: www.amfreece.com
Phones: +420 582 309 146 (Service), +420 582 309 286 (Spare Parts); Fax: +420 582 360 606

F -MACHINE ADJUSTMENT - CROSS BAR

1. If the hand crank feeding is used, make sure, that the stopping mechanism will not be open - lift the stopping lever 17.
2. If the cam 24 reach to the loosen position, the cycle of sewing the cross bar must run (the cam mechanism must be turned by 360°) when the pivot 13 is in the open path of the cam, and allows the pivot movement.
3. Remove the right clamp plate and press the foot pedal to finish the sewing cycle by motor.
4. If the stop 18 of the cam 24 reach to loosen during the manipulation, when the pivot 13 is not placed in the open path of the cam 8 and the table is in the position when the pivot 13 can not be loosen, turn the cam 8 by feeding hand crank 14.
   Loosen the screw 23 and the screw 25 unscrew at all.
   If the table is in basic position, loosen the screw 9 of the lock 10, which replace upwards.
   Remove the right side cover and press the locking lever of the sewing mechanism backwards.
   Release the sewing and by hand wheel 16 finish the cam cycle turning by 360°.
   The lever 21 must be placed in front of the stop 18.
5. Install the lock 10. Use the hand crank 14 to move the table to the position, before the second row of stitches is sewn (as the correction of the cross bar position in axis X chapter ***G 5***).
6. Tighten the screws 23 and 25.
7. Install the right side cover.

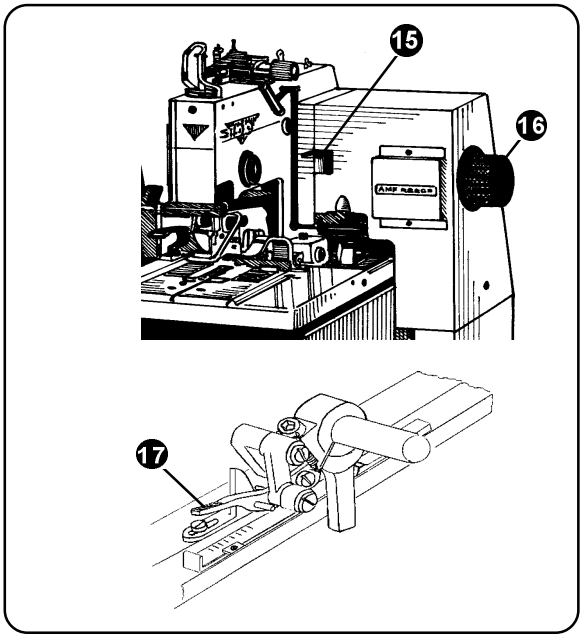

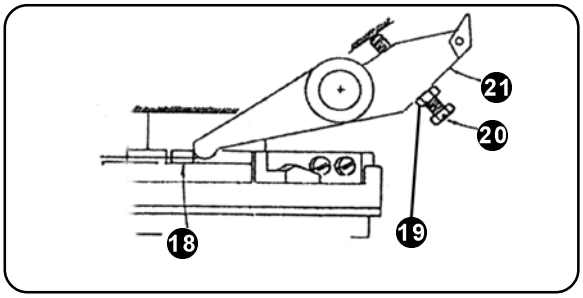

8. CROSS BAR LENGTH ADJUSTMENT

1. To adjust the length of the cross bar, lift the head of machine and loosen the nut 22.
2. By moving the nut with the stud upwards - the length of the cross bar is shorten, by moving down - the length of the cross bar is longer.

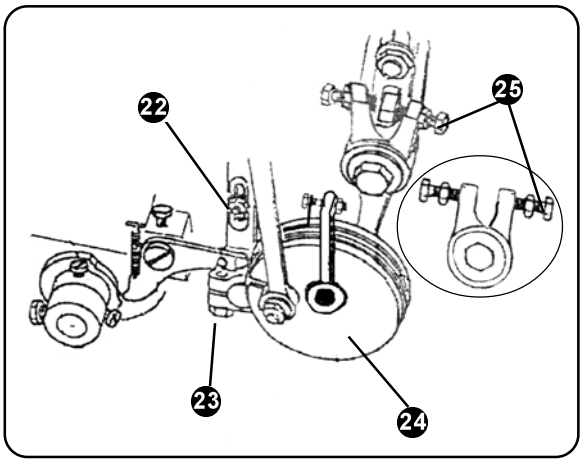

CAUTION! When the length of the buttonhole is changed, the length of the cross bar is changed too. If the buttonhole is shorter, the cross bar is shorter as well and conversely.

9. CORRECTION OF THE CROSS BAR POSITION IN AXIS X

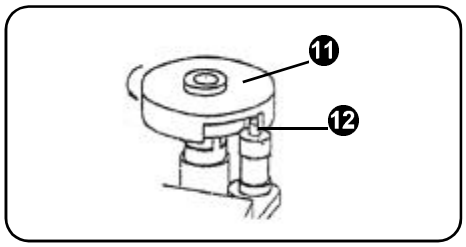

1. Stop the sewing in the position, when the stud 12 leaves the cam 11 before the second row of stitches is sewn, and lever 13 ensure the stud 16.

2. Then loosen the screws 17 and 18.
   Use the eccentric 19 to adjust the cross bar position in axis X.

3. If the cross bar is placed more on the left side, picture **2**, move the lever 13 by eccentric 19 left, or in conversely case, as shows the picture **1**, move it right. Correct adjustment is shown on the picture **3**.

4. Tighten the screws 17 and 18.
   The lever 13 must lightly falls on the stud 16.

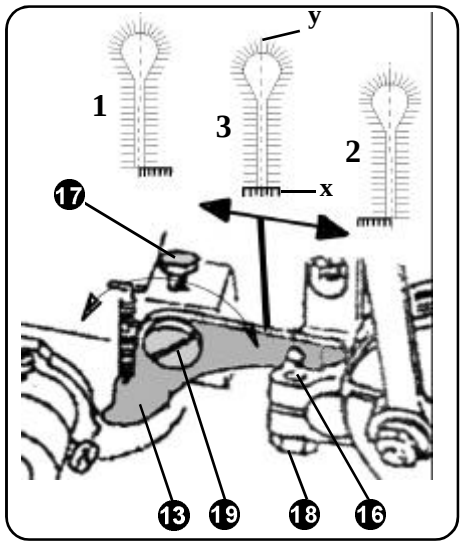

Even feeding in the cross bar

To adjust the feeding, use the brake 30 on the cam 29. Tighten the brake very softly. Too much pressure can cause the quicker wear of the feeding mechanisms. In conversely case, when there is no cam brake, it can cause irregular feeding. If the brake is adequate, but the feeding is still irregular, the feed cam 24 can be damaged (the machine is sewing almost in one place), replace the feed cam.

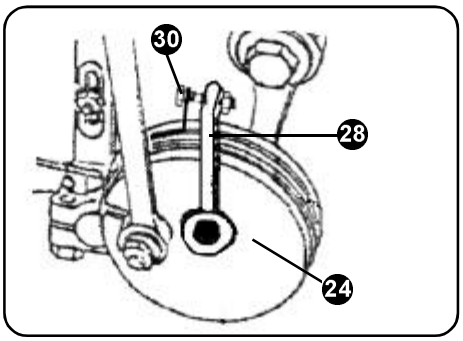

10. CAM ASSEMBLY INSTALLATION

In case of installation a new cam assembly, it is necessary to ensure:

- the lever ❶ must be placed in front of the stop ❷ of the cam 24
- the cam brake lever 28 is directed upwards
- the stud ❸ must be in the slot of the cam
- wedge the cam stud upwards and tighten the screw 27

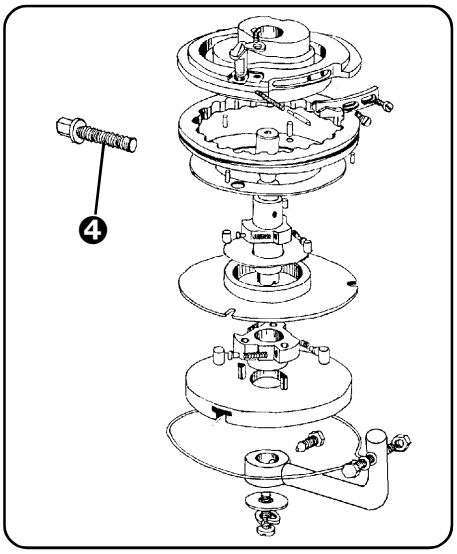

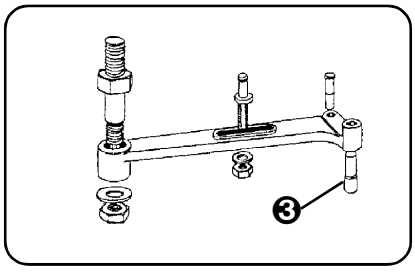

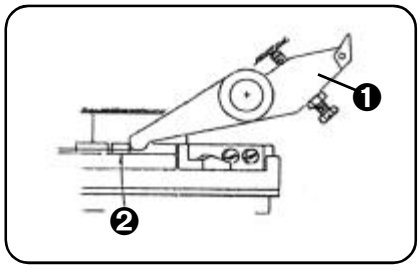

e-mail: service@amfreece.cz ; parts@amfreece.cz; website: www.amfreece.com
Phones: +420 582 309 146 (Service), +420 582 309 286 (Spare Parts); Fax: +420 582 360 606

11. CHANGE OF THE MACHINE ROTATION

It is necessary to decrease the sewing speed on the S 100 - 060 machine. The reason is cross bar sewing. The machine is supplied with the table, which allows 1450 rotations / min. The sewing speed on the S 100 machines is 1768 rotations / min.
If the machine S 100 - 060 sewing cross bar, will be readjusted to fly bar sewing machine for long time, it is also possible to change the sewing speed.

1. Change the belt on the pattern of drive :
   If you have the pulley 17.0051.0.402 / 50 Hz, replace by 17.0051.0.403
   If you have the pulley 17.0051.0.408 / 60 Hz, replace by 17.0051.0.402
   Note: It is necessary to order the spare pulleys.

WARNING ! If the rotation has been changed from 1450 to 1768 it is not possible to readjust the machine to the sewing the cross bar. To sew the cross bar again, it is necessary to decrease the rotation to the original sewing speed 1450 rotations / min. for sewing the cross bar.

WARNING ! - Check the electrical cables for damage.
- Check if the safety covers are in good condition. Replace damaged covers!
- Keep your hands out from the needle space!
- Do not modify the machine in any way, which can eliminate its safety parts.

CAUTION ! - Do not neglect periodic maintenance.
- If there is any fault in electrical power supply, switch off the operating switch (circuit breaker).
- Do not damage, correct and remove safety labels.
- Do not work with the machine when you are under the influence of drugs or alcohol.
- User has to ensure that the lighting of the working area is minimal 750 Luxes.

1. CLEANING AND MAINTENANCE THE MACHINE

1. Switch the power off and disconnect the air supply.

2. For cleaning and maintenance, remove the clamp fees ❶ to access to the sewing mechanism. Then open the rear cover ❷ .

3. Clean the thread lints and fabric from the sewing area, guides and thread tension. To move with the sewing mechanism, turn the hand wheel ❸. It is also possible to raise the machine head, to the locked position.

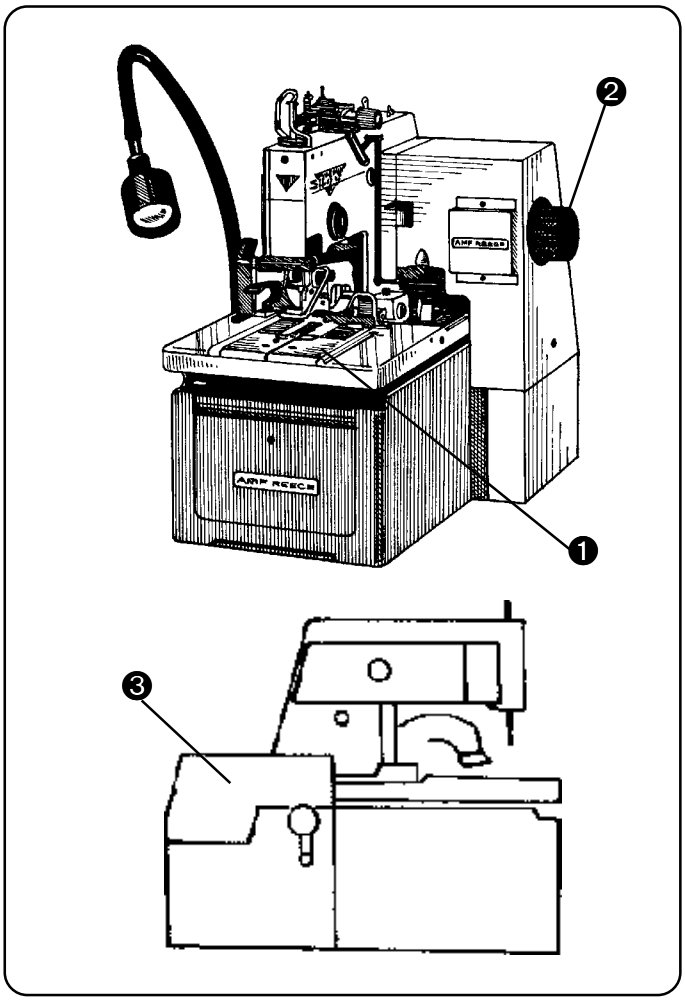

Revised 10/2005
e-mail: service@amfreece.cz ; parts@amfreece.cz; website: www.amfreece.com
Phones: +420 582 309 146 (Service), +420 582 309 286 (Spare Parts); Fax: +420 582 360 606

4. The air regulator maintenance - ***for modification CT (S 100 - 033/035/036) only.***

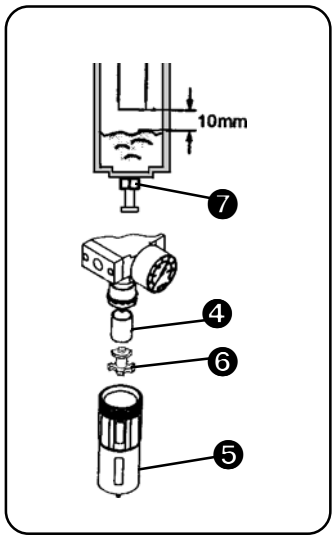

Maintenance of air regulator contains ***check of the condensate*** and possible replacement of the filter pad ❹. The lever of the condensate inside of the desliming receptacle ❺ must be 10 mm below the lever of the filter pad ❹. Lower ring of the nut ❻ signalizes this height.
Open the bleeder screw ❼, so that the condensate can flow out. Then tighten the screw again.

With worse air flow:
Replace the filter pad ❹ after air supply stopping. Exhaust the desliming receptacle ❺ by loosening the screw ❼ and unscrew the desliming receptacle ❺ anti-clockwise. By unscrewing the nut ❻ loosen the filter element ❹ place the new one and assemble the device in reverse order.

5. Perform visual check of mechanism especially in area of sewing mechanism.
6. When the maintenance and checking is finished, close covers, put back the clamps plates and then continue with work.

2. PERIODIC MAINTENANCE

WARNING ! Before making any machine maintenance, switch off the power switch (circuit breaker), which will prevent the accidental start-up and possible operator injury.

Once a day (10 hours of operation)
- cleaning of the sewing mechanism area
- remove the waste from the oil reservoir

once a week (80 hours of operation)
- check the filter regulator and flow out the condensate ***CT only***
- visual check - external and internal mechanisms
- check the belts tension
- check lubrication of mechanisms

once a month (300 hours of operation)
- check of the throat plate wear
- check the screw connection tightening
- check the clearance in sewing mechanism drive
- check the condition of the wiring

Recommended values of screw tightening (Nm):

M3	0,5	0,6	0,8
M4	1,2	1,5	2,0
M5	2,5	3,0	4,0
M6	4,0	5,0	7,0
M8		8,0	16,0
M10		10,0	30,0
M12		25,0	54,0

3. MACHINE LUBRICATION

1. It is necessary to lubricate the machine before the first switch on, or after long time, when the machine did not operate. Use oil ESSO TERESSO 32 or oil with similar quality (in warm areas use oil ESSO TERESSO 80 - 90).
2. The amount of oil on the reservoir ❶ is indicated by the red mark. Too much oil may cause its overflowing in the needle bar area and smear the fabric.
3. The reservoir is filled approximately 10 cm^3 of oil. After every lubrication, sew 10 cycles (buttonholes) on the piece of fabric, to remove excess oil.
4. The red marks and labels indicate the places on the machine, which must be lubricated once a week.

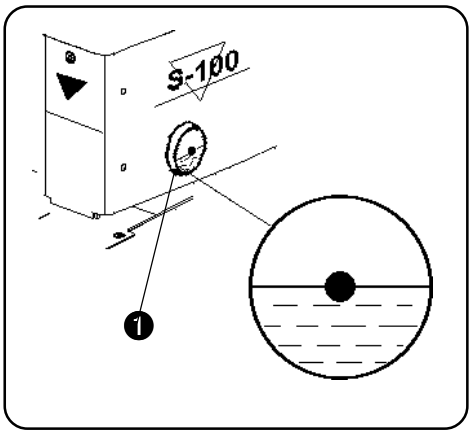

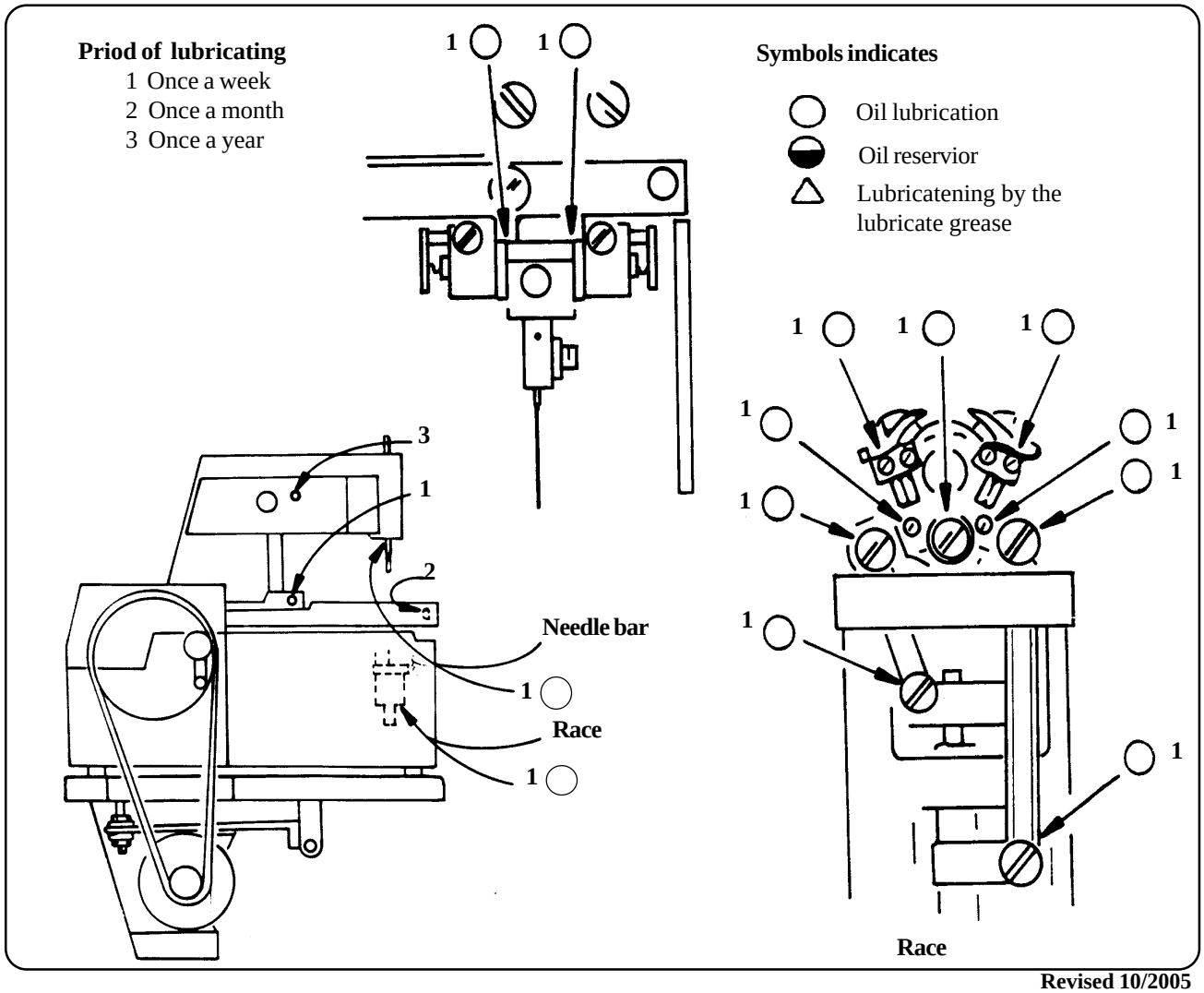

e-mail: service@amfreece.cz ; parts@amfreece.cz; website: www.amfreece.com
Phones: +420 582 309 146 (Service), +420 582 309 286 (Spare Parts); Fax: +420 582 360 606

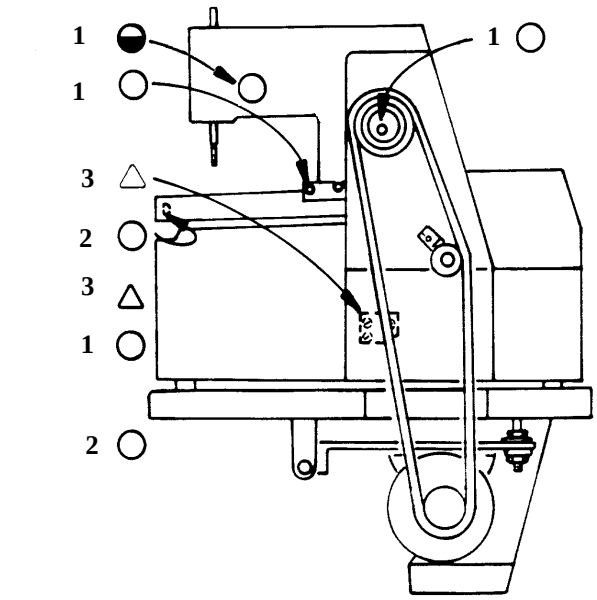

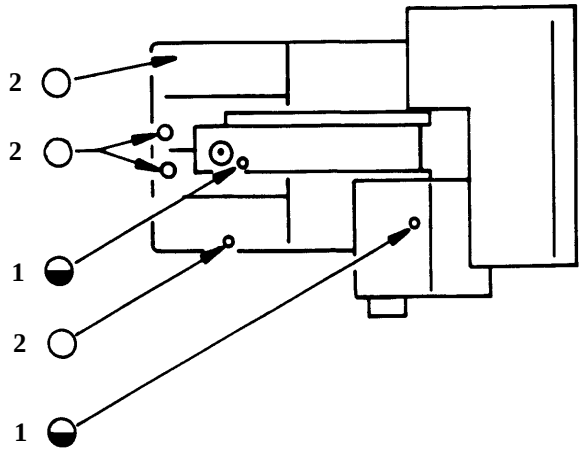

Auxiliary oil reservior

4. MACHINE DISPOSAL

1. To ensure machine ecological disposal it is necessary to remove especially nonmetallic parts from the machine. To take these parts out, it is necessary to perform the partial dismantling of the machine, remove covers, dismantle the machine arm and remove the frame.

2. Aluminium and duralumin parts must be treated separately, also another nonferrous metal parts and plastic parts.

1. ELECTRICAL WIRING DIAGRAMS

WARNING! If the machine is not used with standard table, it is necessary to keep the connection, which correspond to safety precaution of the country, which is pursued in.

Standard table has motor 1425/1725 rotation a minute (50/60 Hz) 550 W. After machine connection is necessary to ensure electrical power supply of the machine in every fuse by the thermal fuse 10 A.

Electrical wiring of the table is supplied for following connection of the motor, needed diagrams of the connection are mentioned below:
1. Connection 1N+PE 115V/60 HZ
2. Connection 1N+PE 230V/50 Hz
3. Connection 3N+PE 400V/50 Hz
4. Connection 3N+PE 230V/60 Hz

CAUTION! It is necessary, to connect the conductive construction elements according to the diagram, protection from dangerous touch realized according to EN 60204-1. The original table delivery includes all required parts.

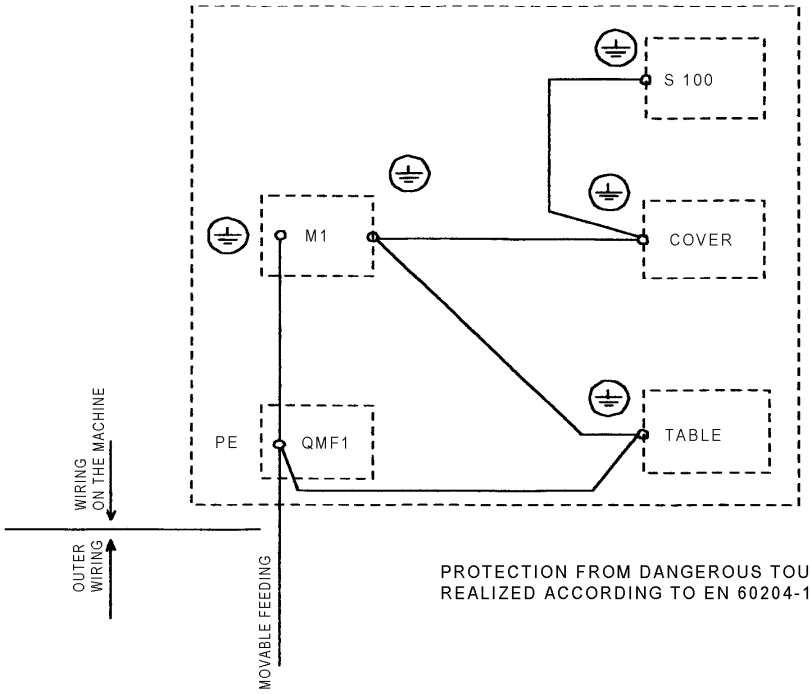

LEGEND

S100	- CLOTHING BUTTONHOLE MACHINE
M1	- 3 F MOTOR; 1148/C
QMF1	- CIRCUIT BRACKER WITH OVERCURRENT PROTECTION SM1-2,5
⏚	- INNER TERMINAL CONNECTOR FOR POTENCIONAL DIFFERENCE OF EQUALIZING - PROTECTIVE JOINING OF CONDUCTIVE CONSTRUCTIONAL PARTS WITH A CONDUCTOR 1 mm CONDUCTORS COLOUR - GREEN YELLOW

Revised 10/2005
e-mail: service@amfreece.cz ; parts@amfreece.cz; website: www.amfreece.com
Phones: +420 582 309 146 (Service), +420 582 309 286 (Spare Parts); Fax: +420 582 360 606

ASSEMBLY DIAGRAM

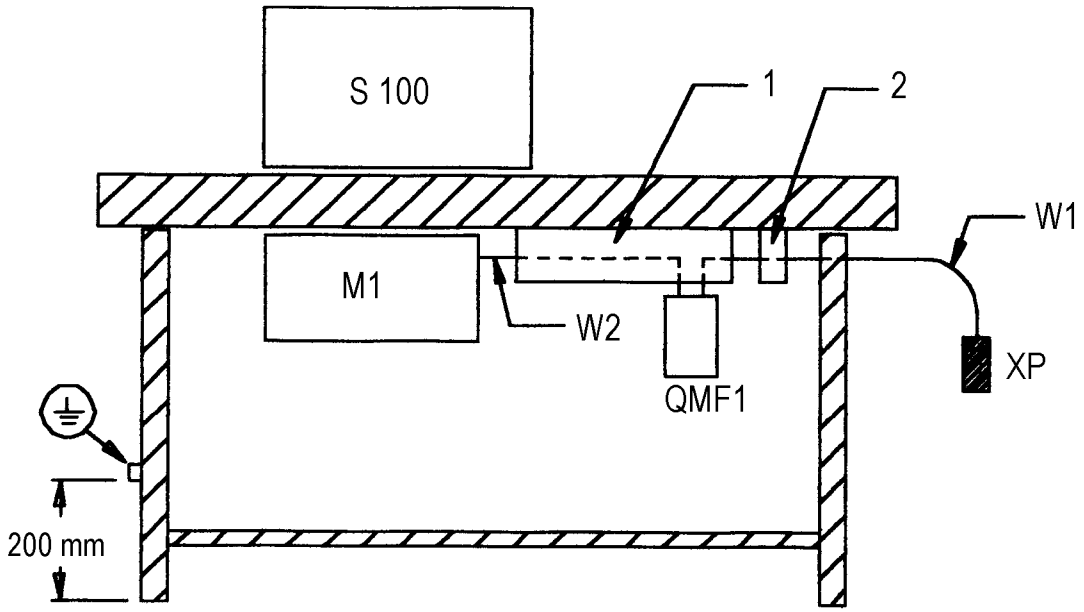

LEGEND:

S 100 - CLOTHING BUTTONHOLE MACHINE
QMF1 - WORK SWITCH - CIRCUIT BREAKER WITH OVECURRENT PROTECTION SM1-2,5
XP - MAIN SWITCH - PLUG
M1 - 3Ph MOTOR; 1148/C
W1 - FEED CABLE
W2 - FEED CABLE FOR M1
⏚ - INTER TERMINAL CONNECTOR FOR POTENTIAL DIFFERENCE EQUALIZING
1 - COLLECTOR STRIP LV 40X15
2 - CABLE CLIP "A"
PROTECTION FROM DANGEROUS TOUCH REALIZED ACCORDING TO EN 60204-1

DIAGRAM OF CONNECTION 1N+PE 115V/60Hz

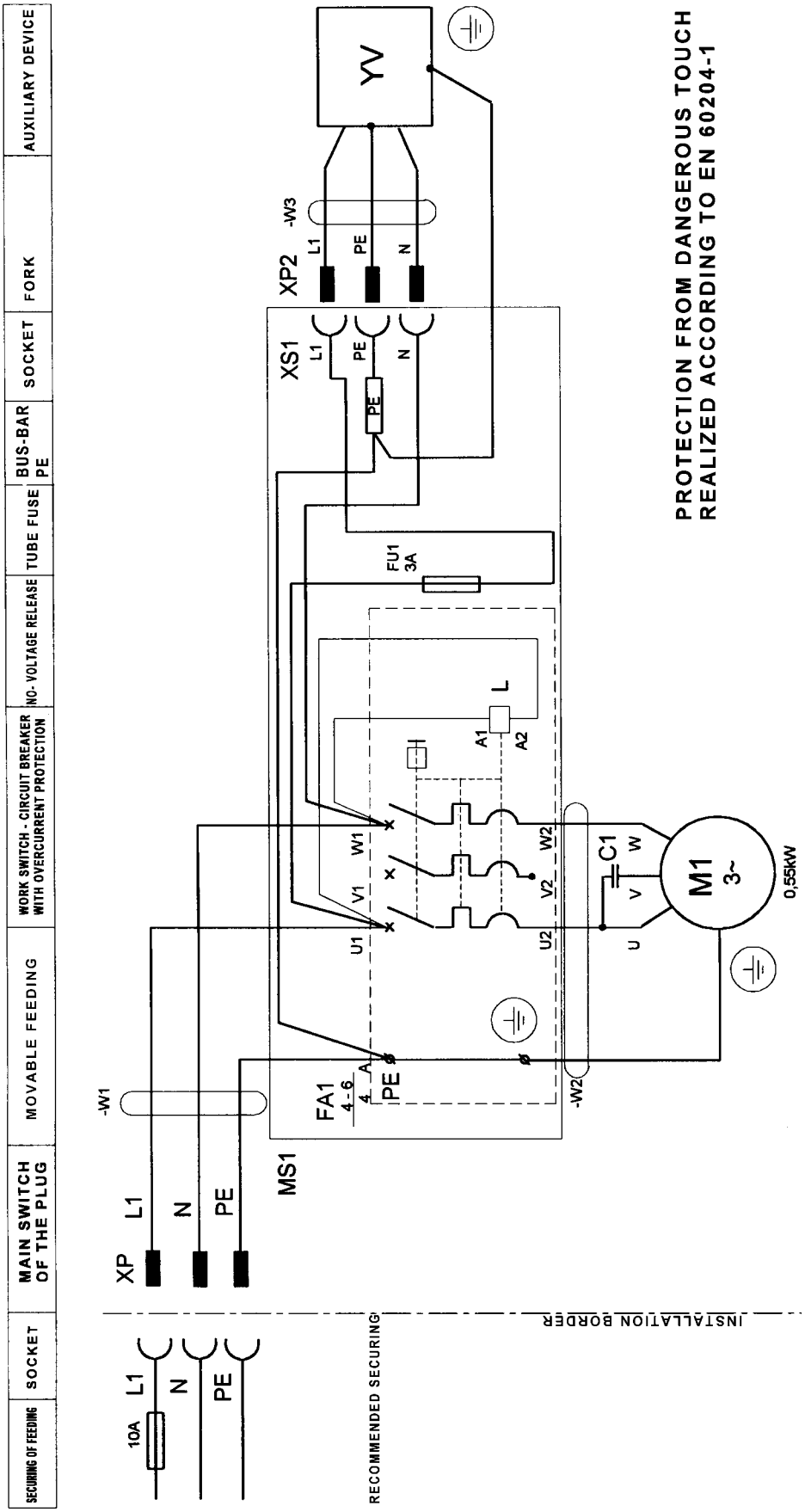

Revised 10/2005

e-mail: service@amfreece.cz ; parts@amfreece.cz; website: www.amfreece.com
Phones: +420 582 309 146 (Service), +420 582 309 286 (Spare Parts); Fax: +420 582 360 606

H - DOCUMENTATION

DIAGRAM OF CONNECTION 1N+PE 230V/50Hz

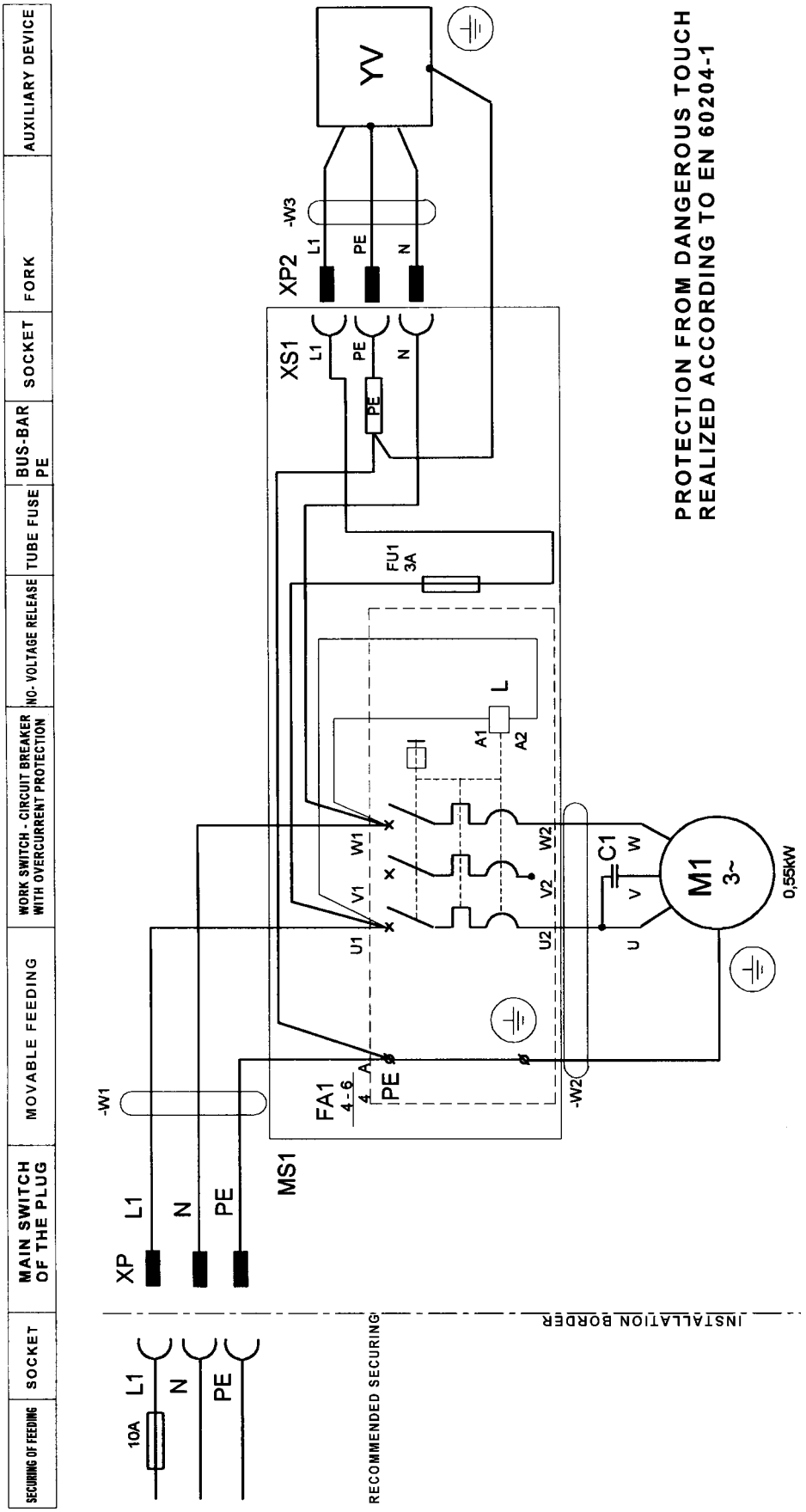

DIAGRAM OF CONNECTION 3N+PE 400V/50Hz

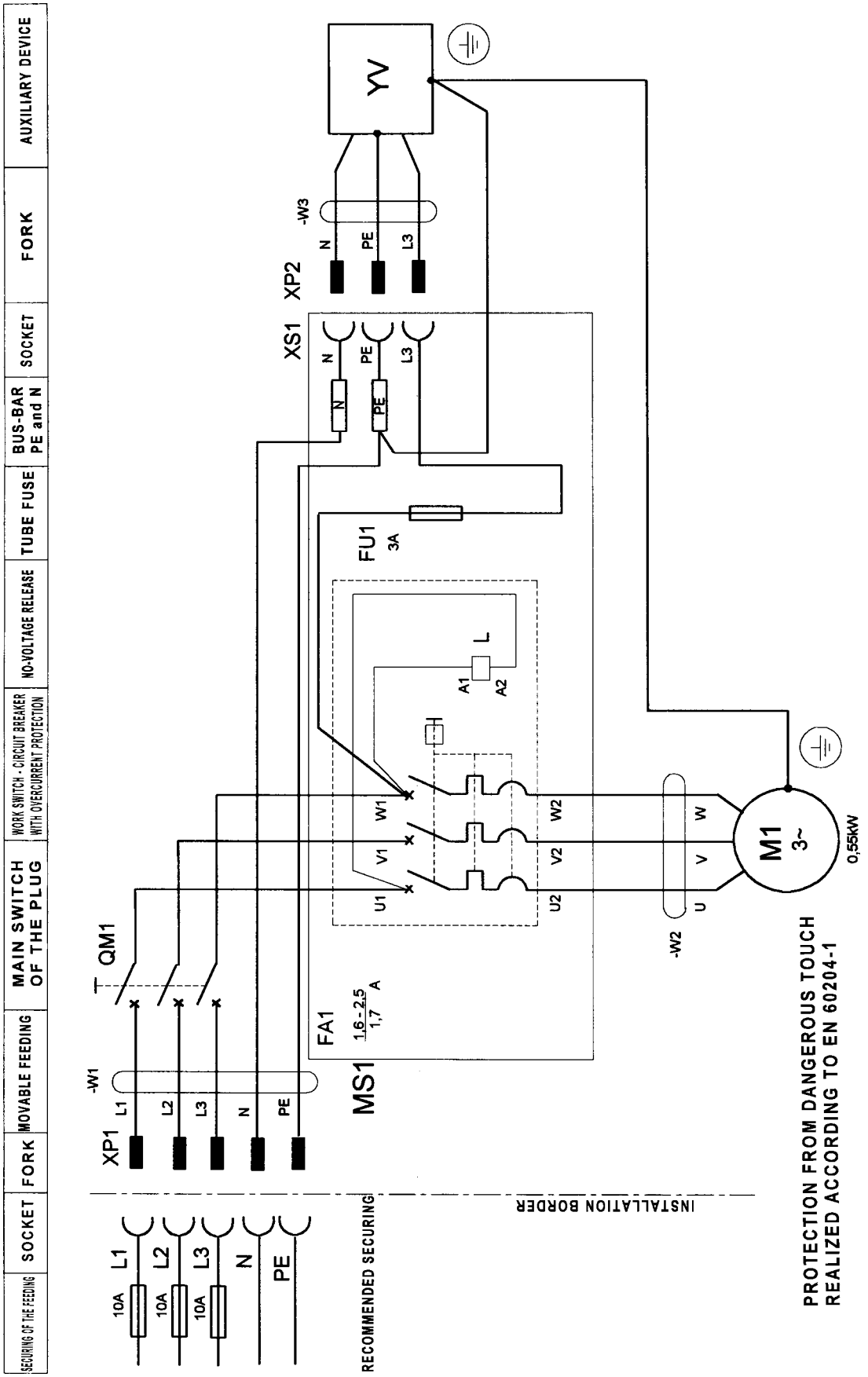

Revised 10/2005

e-mail: service@amfreece.cz ; parts@amfreece.cz; website: www.amfreece.com
Phones: +420 582 309 146 (Service), +420 582 309 286 (Spare Parts); Fax: +420 582 360 606

H - DOCUMENTATION

DIAGRAM OF CONNECTION 3N+PE 230V/60Hz

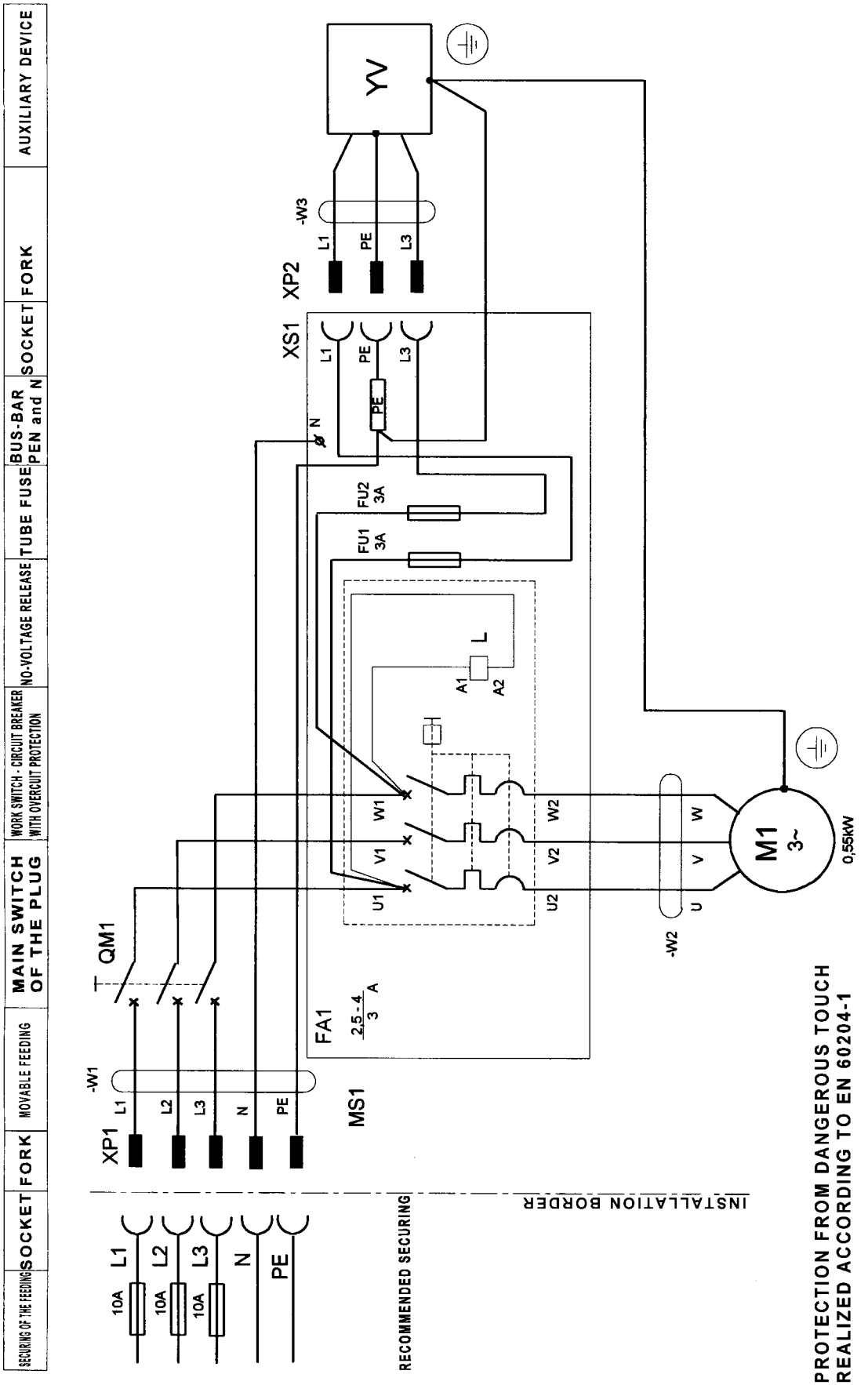

Revised 10/2005
e-mail: service@amfreece.cz ; parts@amfreece.cz; website: www.amfreece.com
Phones: +420 582 309 146 (Service), +420 582 309 286 (Spare Parts); Fax: +420 582 360 606

TABLE OF CONTENTS

Page

Motor fails to start 2-2
The machine fails 2-2
Machine starts, but stops prematurely 2-2
Machine starts, fails to stitch and stops 2-2
Machine fails to stitch, but completes the cycle 2-2
Machine fails to stop stitching 2-3
Machine fails to reach the end position 2-3
Machine fails to stop, but repeats the cycle 2-3
Knocking noise at machine start 2-3
Machine fails to clamp material or releases the material too soon 2-3
Machine fails to release the fabric clamp 2-3
Uneven clamp feet pressure 2-4
Machine fails to cut the fabric 2-4
Cutting lever fails to return 2-4
Skipped stitch at the sew start 2-4
Skipping stitches 2-5
Sewn end split seams 2-5
Needle thread break 2-5
Bobbin thread break 2-6
Needle break 2-6
Inconsistent buttonhole section seam 2-6
Sides of the seam at the straight section of the buttonhole are not uniform 2-6
Incorrect eye shape 2-7
Seams is cut by the CA knife 2-7
Incorrect buttonhole quality 2-7

Round eye machines only:

Removing stitches at the end of sewing 2-8
Cutting the stitches while sewing in the Cut After mode 2-8

Cross bar sewing machines S 100 - 60 2-9

TROUBLESHOOTING

SYMPTOMS	POSSIBLE CHANGE	PROBABLE SOLUTION	PAGE
Motor fails to start.	No voltage.	Check the main lead wire.	
	Incorrect voltage.	Perform voltmetr check.	
	Electrical equipment defect.	Check the main switch,the cutouts, and the emergency stop switch.	
The machine fails.	Incorrect motor rotation.	Change the plugs.	
	Missing belt.	Replace the belt.	1-12
	Carrier teef are disengaged.	Change the drive lever spring or correct the idler pulley travel.	1-37
	Damaged drive gear.	Replace the drive gear 17.0033.5.113	1-37
	Idler pulley collar clampimg screw loose .	Correctly position the collar and tighten the screw.	1-37
The machine starts, but stops prematurely.	Excessive cutting pressure.	Correctly decrease the pressure.	1-53
	Stitch mechanism is not rotating.	Ensure the drive mechanism releases correctly.	1-13
	Left side of the drive belt is too loose.	Tighten the drive belt.	1-13
Machine startts, fails to stitch and stops.	Incorrect stitch lever function.	Correctly adjust the stitch lever.	1-36
	Disengaged friction clutch.	Correct pulley travel and adjust the pressure.	1-36
	Locked stitch mechanism.	Unlock and correctly adjust.	1-36
Machine fails to stitch, but completes the cycle.	Weak stitch lever spring.	Replace the spring. 17.0026.3.126	1-36
	Faulty stitch lever bumper.	Replace the bumper. 17.0082.5.996	1-36
	Faulty clamp lever spring.	Replace the spring.	1-36

Revised 10/2005
e-mail: service@amfreece.cz, parts@amfreece.cz, website: www.amfreece.com
Phones: +420 582 309 146 (service), +420 582 309 286 (spare parts), Fax + 420 582 360 606

TROUBLESHOOTING

SYMPTOM	POSSIBLE CAUSE	PROBABLE SOLUTION
Machine fails to stop stitching.	Incorrect stop mechanism function.	Correctly adjust the pressure.
	Worn or damaged stop mechnism teeth.	Replace or correctly adjust the stop mechanism teeth.
	Broken tension spring.	Replace the spring.
Machine fails to reach the end position.	Cam braking belt tension too tight.	Correctly adjust the pressure.
	Incorrect table pulley travel.	Correct the table pulley travel.
	Damaged drive member.	Replace the drive member.
	Loosen adjusting roller nut.	Adjust and tighten the roller nut.
	Excessive cutting pressure.	Correctly decrease the cutting pressure.
The machine fails to stop, but repeats the cycle.	Damaged or weak strating lever spring.	Replace the spring 17.0026.0.214 or increase the pressure.
	Incorrect starting lever travel.	Correct the starting lever travel, lubricate.
	Incorrect adjusting roller setting CA/CB.	Correctly adjust the roller.
Knocking noise at machine start.	Incorrectadjusting roller setting CA/CB.	Correctly adjust the roller.
	Loose drive member.	Tighten the drive member nut.
	Pulley collar incorrectly set for high speed table travel.	Correctly adjust the pulley collar.
Machine fails to clamp material or releases the material too soon.	Incorrect treadle mechanism setting.	Correctly adjust the mechanism.
Machine fails to release the fagbric clamp.	Incorrect adjust roller setting CA/CB.	Correctly adjust the roller.
	Incorrect disengagement lever setting.	Correctly adjust the disengagement lever.

TROUBLESHOOTING

SYMPTOM	POSSIBLE CAUSE	PROBABLE SOLUTION
Uneven clamp feet pressure.	Rocker lever bearing screw loose.	Tighten the screw.
	Drive member loose or damaged.	Tighten the screw or replace the drive member.
Machine fails to cut the fabric.	Damaged knife.	Replace the knife.
	Damaged cutting block.	Repair or replace the block.
	Incorrect cutting pressure.	Increase the cutting pressure or replace the tracing finger.
	Damaged cutting lever .	Replace cutting lever.
	Loose machine frame csrews.	Tighten the screws.
Cutting lever fails to return.	Faulty extension spring.	Replace the spring. 17.0026.3.013
	Incorrect central pins setting.	Lubricate and adjust the pins.
Skipped stitch at the sew start.	Sew start thresd length too short.	Ensure the thread is clamped firmly.
	L.H. spreader incorrectly installed.	Adjust the L.H. spreader position.
	Incorrect R.H. looper timing .	Adjust the needle to the looper timing.
	The fork of the left spreader is out of the looper hole.	Adjust it.
	Incorrect the thread tension	Adjust the thread tension.
	Clamp foot to the needle entry point clerance too large.	Adjust the clerance.
	Bent or scratched looper.	Replace the looper.

Revised 10/2005
e-mail: service@amfreece.cz, parts@amfreece.cz, website: www.amfreece.com
Phones: +420 582 309 146 (service), +420 582 309 286 (spare parts), Fax + 420 582 360 606

TROUBLESHOOTING

SYMPTOM	POSSIBLE CAUSE	PROBABLE SOLUTION
Skipping stitches.	Damaged or incorrectly installed needle.	Replace the needle.
	Excessive looper to needle clearance.	Correctly decrease the clearance.
	Incorrect looper and needle timing.	Correct the looper and the needle timing.
	Incorrect spreader open/close timing.	Correct the spreader open/close timing.
	Excessive clamp foot to the needle entry point clearance.	Correctly decrease the clamp foot to needle entry point clearance.
	Unequal distance on the left and right - hand side of the fabric.	Correctly equal the distance on the left and right - hand sideof the fabric.
	Wear or damaged stitch plate.	Replace to the new one.
	Elastic material.	Carefully adjust the sewing mechanism.
Sew end split seams.	Incorrect needle thread tension timing.	Adjust the timing to loosen the tension.
	Incorrect right - hand looper timing.	Correctly adjust the needle to looper timing.
	Too litle right - hand spreader opening.	Correctly increase the spreader opening.
	Gimp is too hard.	Replace the gimp.
Needle thread break.	Excessive needle thread tension.	Correctly decrease the tension.
	The needle contacts the looper.	Correctly increase the clearance.
	Needle contacts the clamp foot.	Correctly increase the clearance.
	Needle contacts the holder.	Correctly increase the the clearance.
	Thread patch is worn or damaged.	Replace the thread patch.

TROUBLESHOOTING

SYMPTOM	POSSIBLE CAUSE	PROBABLE SOLUTION
Bobbin thread break.	Excessive bobbin thread tension .	Correctly decrease the tension.
	Incorrect left - hand spreader installation.	Correct the left - hand spreader position.
	Needle contacts the looper.	Correctly increase the clearance.
	Needle contacts the clamp foot.	Correctly increase the clearance.
	Needle contacts the holder.	Correctly increase the clearance.
	Thread patch is worn or damaged.	Replace the patch.
	Damaged left- hand spreader.	Replace.
Needle break.	Weak needle.	Use suitable needle.
	Needle contact the looper or spreader.	Correctly increase the clearance.
	Needle contact the clamp foot.	Correctly increase the clearance.
	Excessive needle to needle guard clearance.	Correctly increase the clearance.
	Incorrect needle bar height.	Correct the needle bar height.
Inconsistent buttonhole section seam	Incorrect main shaft and cam brake pressure.	Correct the main shaft and cam brake pressure.
Sides of the seam at the straight section of the buttonhole are not uniform.	Unequal amount of fabric for the left and right sides of the buttonhole.	Equalize the amount of fabric for both sides of the buttonhole.
	Incorrect knife drop position.	Correct the fknife position.
	Unequal left and right - hand pressure.	Equalize the left and right-hand pressure.
	Incorrect man shaft and cam brake prassure.	Correct the main shaft and cam brake pressure.

Revised 10/2005
e-mail: service@amfreece.cz, parts@amfreece.cz, website: www.amfreece.com
Phones: +420 582 309 146 (service), +420 582 309 286 (spare parts), Fax + 420 582 360 606

TROUBLESHOOTING

SYMPTOMS	POSSIBLE CAUSE	PROBABLE SOLUTION
Incorrect eye shape.	Improper lateral cam timing.	Correctly adjust the cam timing.
	Incorrect looper bracket initial position.	Correct the looper bracket initial position.
	Incorrect looper bracket turn angle.	Correct the looper bracket turn angle.
	Incorrect knife drop position.	Correct the knife drop position.
	Incorrect throat plate position.	Set the throat plate surface 0,30 to 0,50 mm, (0.010 to 0,020”) lower than the support plate top surface.
Seams is cut by the CA knife	Cutting width too small.	Correctly increase the cutting width.
	Incorrect knife drop position.	Correct the knife drop position.
	Unequal left and right - hand openings.	Equalize the left and right - hand openibngs.
Incorrect buttonhole quality	Incorrect stitch density.	Correctly set the stitch density.
	Incorrect number of buttonhole eye stitches.	Correct the number of the buttonhole eye stitches.
	Incorrect fabric spread.	Correct the fabric spread.
	Incorrct stitch line and buttonhole axis distance.	Correct the stitch line and buttonhole axis distance.
	Incorrect upper and lower thread tension.	Correct the upper and lowerthread tension.
	Incorrect thread strenght and stretch.	Correctly replace the thread..

TROUBLESHOOTING

ROUND EYE MACHINES ONLY :

SYMPTOMS	POSSIBLE CAUSE	PROBABLE SOLUTION
Removing stitches at the end of the sewing.	Incorrect upper thread tension release.	Correct the upper thread tension release.
	Damaged right looper.	Replace the looper.
	Damaged throat plate hole.	Replace the throat plate.
	Incorrect right looper and needle timing.	Correct the right looper and needle timing.
Cutting the stitches wdile sewing in the Cut After mode.	Bent needle.	Replace the needle.
	Loose thread tension.	Increase tension and hole diameter.
	Small sewn diameter.	Throw sewing out of axis.
	Incorrect fabric clamping.	Increase clamping pressure.
	Knife is not centered in the hole.	Correct the knife position.

Revised 10/2005
e-mail: service@amfreece.cz, parts@amfreece.cz, website: www.amfreece.com
Phones: +420 582 309 146 (service), +420 582 309 286 (spare parts), Fax + 420 582 360 606

TROUBLESHOOTING

THE CROSS BAR SEWING MACHINE S 1 0 0 - 0 6 0

SYMPTOMS	POSSIBLE CAUSE	PROBABLE SOLUTION
The cross bar sewing is not vertical to the fly bar sewing.	Incorrect screw adjustment on the lever.	Adjust according to the chapter G3.
	Snapped sping.	Replace the spring.
The cross bar sewing is not in the center of the buttonhole.	Incorrectly adjusted lever 16.	Adjust according to the chapter G7.
There is no possible to change the stitch density in the cross bar.	Snapped pin, loosen screw.	Replace the pin and adjust it according to the chapter D6 - Adjustment of the bite size in the cross bar.
After the cross bar is sewn, the machine does not stop sewing.	The drive on the cross bar cam is demeged.	Replace the drive and adjust it according the chapter G4.
	Incorrect function of the blocking lever.	Adjust according to the chapter G4, article 2.
After the cross bar is sewn the machine continues the sewing in one place.	Damaged the drive on the cross bar cam.	Replace the drive and adjust it according the chapter G4.
	Loosen drive screws.	Tighten the screws.
	The lever is damaged.	Replace the lever and adjust it according the chapter G4 - Adjustment the table stop, article 2

Revised 10/2005
e-mail: service@amfreece.cz, parts@amfreece.cz, website: www.amfreece.com
Phones: +420 582 309 146 (service), +420 582 309 286 (spare parts), Fax + 420 582 360 606