# TABLE OF CONTENTS

Head, Cam Case ..... 3-2
Stitch Cam Shaft ..... 3-4
Needle Bar Drive ..... 3-6
Needle Bar ..... 3-8
Stitch Bite Drive ..... 3-10
Thread Guide and Thread Tension ..... 3-12
Thread Take Up Lever ..... 3-14
Looper Drive ..... 3-16
Lubrication ..... 3-18
Race ..... 3-20
Main Cam Drive Shaft ..... 3-24
Main Cam ..... 3-26
Feeding and Density Mechanism ..... 3-28
Treble-Arm Lever and Sewing Switch-Off ..... 3-30
Rocking Lever ..... 3-32
Upper Thread Trimmer and Thread Quide ..... 3-34
Buttonhole Shape Change ..... 3-36
Turning Assembly ..... 3-38
Cutting Lever Assembly ..... 3-40
Table Side Movement ..... 3-42
Sewing Operation and Fly Bar ..... 3-44
Starting Lewer ..... 3-46
Clamp Yoke and Shifting Lever ..... 3-48
Spreading ..... 3-50
Clamping Mechanism ..... 3-52
Clamp Plate Assembly ..... 3-54
Covers ..... 3-56
Table ..... 3-60
Drive ..... 3-62
Accessories ..... 3-64


**E-mail: service@amfreece.cz; parts@amfreece.cz; website: www.amfreece.com**
**Phone: +420 582 309 286; Fax: +420 582 360 606**

# HEAD, CAM CASE

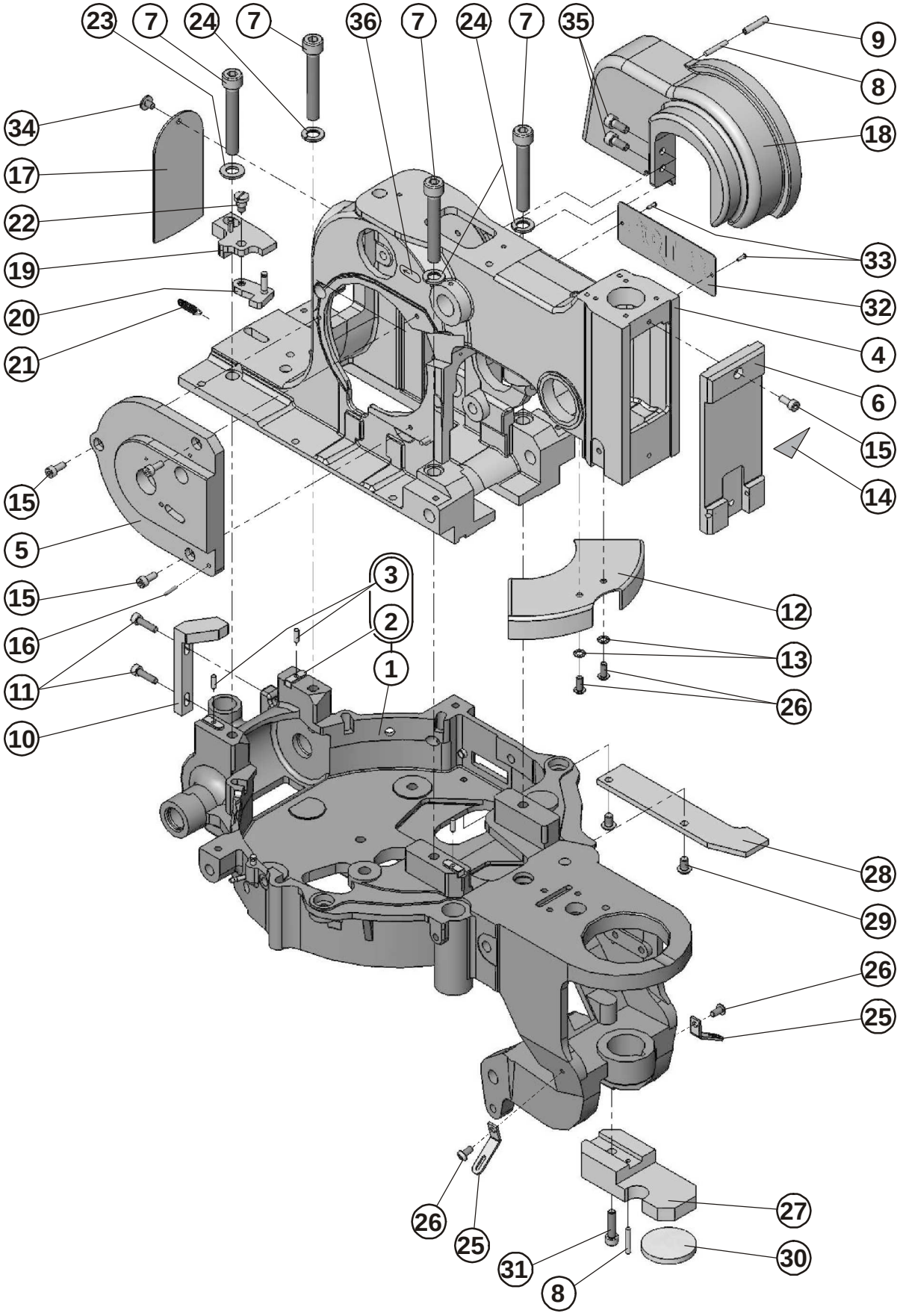

# HEAD, CAM CASE

| DET | PART NUMBER | DESCRIPTION | QTY. |
|---|---|---|---|
| 01 | 11.3001.0.000 | CAM CASE | 1 |
| 02 | 11.3001.0.902 | KEY | (3) |
| 03 | 12.1010.0.310 | PIN 3-10 | (3) |
| 04 | 11.1001.0.000 | HEAD | 1 |
| 05 | 11.1188.0.000 | COVER ● | 1 |
| 06 | 11.1082.0.000 | COVER ● | 1 |
| 07 | 08.6000.8.055 | SCREW M8-55 | 4 |
| 08 | 12.1010.0.320 | PIN 3-20 | 2 |
| 09 | 19.0094.2.409 | JOINT PM | 1 |
| 10 | 13.3083.0.000 | SUPPORT | 1 |
| 11 | 08.6000.4.016 | SCREW M4-16 | 2 |
| 12 | 10.1145.2.000 | SHIELD GRAY | 1 |
| 13 | 08.6832.4.000 | WASHER M4 | 2 |
| 14 | 05.1389.0.000 | LABEL TRIANGLE ●●● | 1 |
| 15 | 08.6000.4.010 | SCREW M4-10 | 4 |
| 16 | 12.1010.0.314 | PIN 3-14 | 1 |
| 17 | 10.1080.0.000 | REAR COVER GRAY | 1 |
| 18 | 11.1195.0.000 | HOLDER ● | 1 |
| 19 | 10.1180.0.000 | BLOCK | 1 |
| 20 | 10.1181.0.000 | LATCH | 1 |
| 21 | 01.5473.0.000 | SPRING - EXTENSION | 1 |
| 22 | 01.1100.0.000 | SCREW | 1 |
| 23 | 08.6850.8.000 | WASHER 8 | 1 |
| 24 | 08.6800.8.000 | SPRING WASHER M8 | 3 |
| 25 | 10.3607.1.000 | CORD GUIDE | 2 |
| 26 | 08.6200.4.008 | SCREW M4-8 | 4 |
| 27 | 11.5008.0.000 | ABUTMENT ● | 1 |
| 28 | 11.3002.0.000 | PLATE | 1 |
| 29 | 08.6200.5.008 | SCREW M5-8 | 2 |
| 30 | 19.0094.5.409 | FELT ●●● | 1 |
| 31 | 08.6000.5.020 | SCREW M5-20 | 1 |
| 32 | 12.8000.1.027 | LABEL S105 ● | 1 |
| 33 | 12.1016.0.002 | NAIL 1,86x6,35 | 2 |
| 34 | 08.6522.4.006 | SCREW M4-6 | 1 |
| 35 | 08.6000.5.012 | SCREW M5-12 | 2 |
| 36 | 05.0413.0.000 | DECAL, OIL | 1 |

# STITCH CAM SHAFT

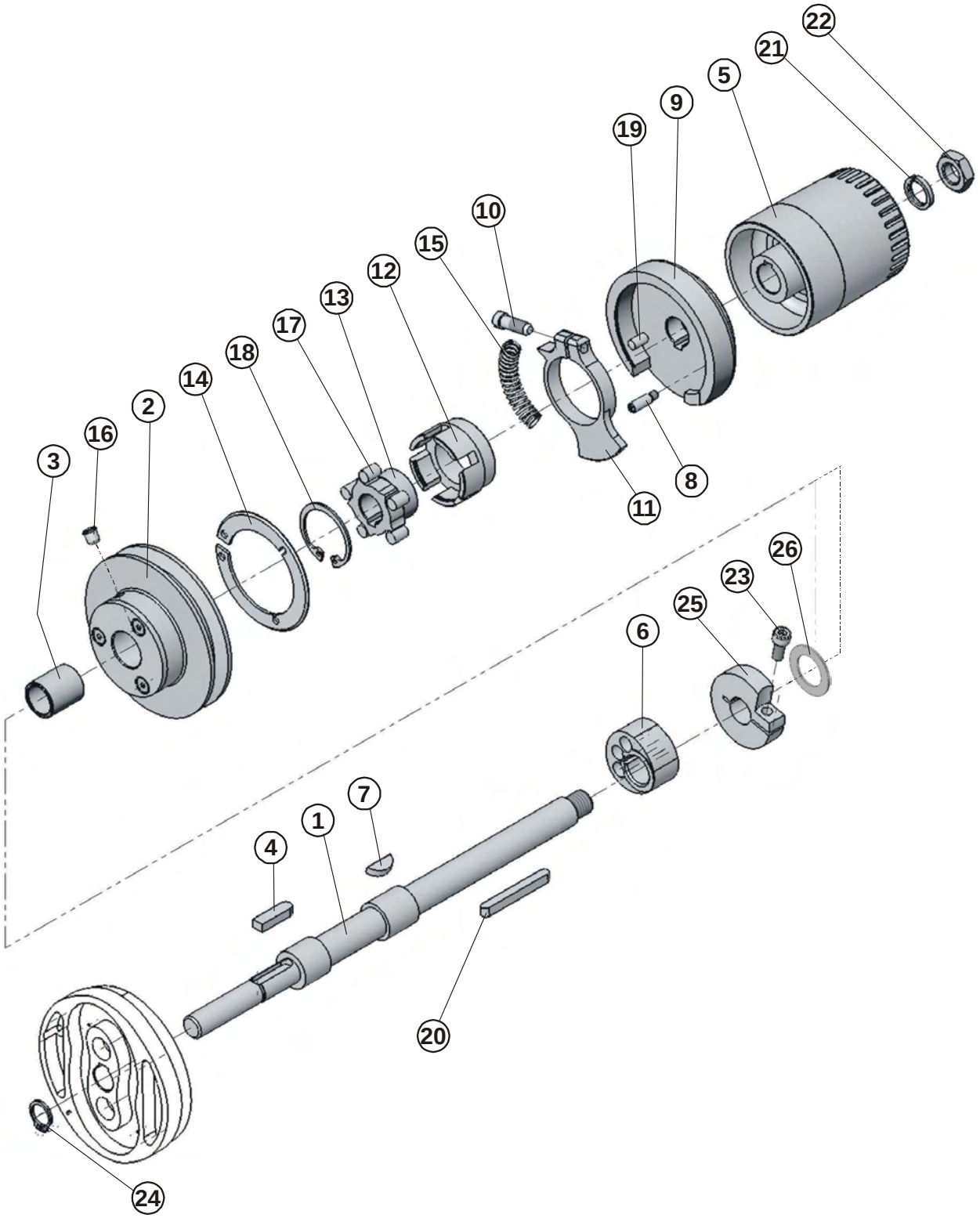

# STITCH CAM SHAFT

| DET | PART NUMBER | DESCRIPTION | QTY. |
|---|---|---|---|
| 01 | 11.1090.0.300 | SHAFT | 1 |
| 02 | 11.1094.0.000 | PULLEY | 1 |
| 03 | 11.1100.0.400 | BUSHING | 1 |
| 04 | 10.1091.1.803 | KEY | 1 |
| 05 | 11.1096.0.400 | HAND GRIP ● | 1 |
| 06 | 17.0067.2.411 | VIBRATOR CAM | 1 |
| 07 | 17.0021.1.045 | KEY | 1 |
| 08 | 17.0033.1.061 | STUD | 1 |
| 09 | 17.0044.2.430 | STOP HEAD | 1 |
| 10 | 17.0012.1.172 | SCREW | 1 |
| 11 | 17.0063.6.068 | LEVER | 1 |
| 12 | 17.0044.2.232 | CAGE | 1 |
| 13 | 17.0045.9.018 | CLUTCH STAR | 1 |
| 14 | 17.0044.2.234 | RING | 1 |
| 15 | 17.0026.0.221 | SPRING | 1 |
| 16 | 17.0004.7.253 | DILER Ø 6 | 1 |
| 17 | 12.2099.1.006 | BEARING ROLLER 6,5 - 9 | 5 |
| 18 | 12.1040.1.007 | RETAINING RING 32 | 1 |
| 19 | 12.1010.0.520 | PIN | 1 |
| 20 | 12.4030.0.545 | KEY | 1 |
| 21 | 08.6800.9.000 | SPRING WASHER | 1 |
| 22 | 08.6710.9.500 | NUT | 1 |
| 23 | 08.6000.5.012 | SCREW | 1 |
| 24 | 01.6384.0.000 | RETAINING RING | 1 |
| 25 | 24.0002.0.000 | CLAMP COLLAR | 1 |
| 26 | 17.0019.0.237 | WASHER | 1 |

# NEEDLE BAR DRIVE

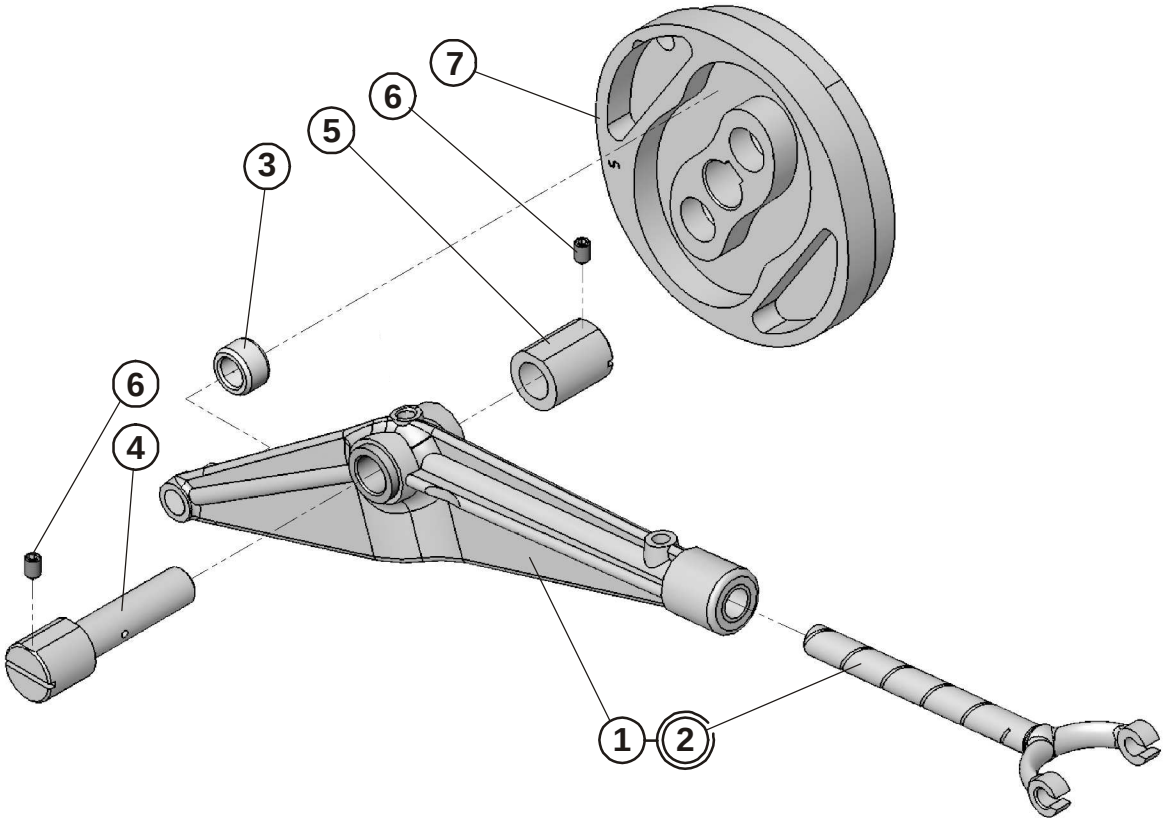

# NEEDLE BAR DRIVE

| DET | PART NUMBER | DESCRIPTION | QTY. |
|---|---|---|---|
| 01 | 11.1047.0.000 | LEVER ● | 1 |
| 02 | 19.0041.2.412 | YOKE | (1) |
| 03 | 11.1122.0.010 | ROLL 00 | 1 |
| | Its Possible Order | | |
| | 11.1122.0.999 | ROLL 05 (+0,005) | |
| | 11.1122.0.998 | ROLL 10 (+0,01) | |
| | 11.1122.0.980 | ROLL 15(+0,015) | |
| | 11.1122.0.979 | ROLL 20 (+0,02) | |
| 04 | 19.0032.6.400 | PLUG | 1 |
| 05 | 19.0041.6.402 | BUSHING | 1 |
| 06 | 08.6400.4.006 | SCREW M4-6 | 2 |
| 07 | 11.1091.0.000 | STICH CAM | 1 |

# NEEDLE BAR

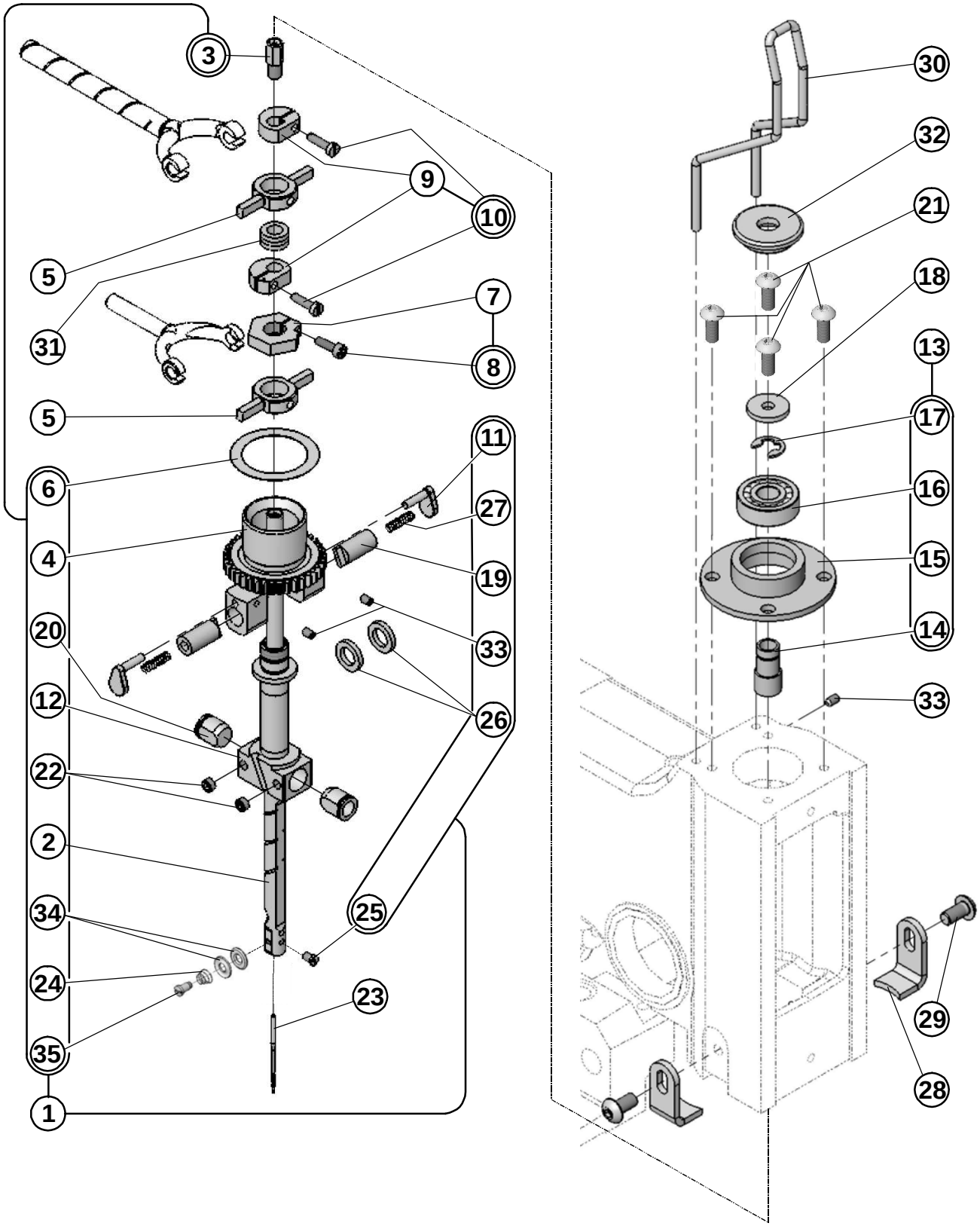
3
9
10
5
31
7
8
5
6
11
27
4
19
20
33
12
26
22
2
34
25
24
23
35
1
30
32
21
18
13
17
16
15
14
33
29
28

# NEEDLE BAR

| DET | PART NUMBER | DESCRIPTION | QTY. |
|---|---|---|---|
| 01 | 11.1028.0.050 | NEEDLE BAR - ASSEMBLY | 1 |
| 02 | 14.1028.4.000 | NEEDLE BAR | (1) |
| 03 | 14.1032.3.000 | BUSHING N.B. UNI | (1) |
| 04 | 11.1023.0.000 | GEAR, NEEDLE BAR | (1) |
| 05 | 19.0045.3.402 | GIMBAL D=11 UNI | 2 |
| 06 | 01.4081.0.009 | WASHER - PLAIN (0.009") | (1) |
| 07 | 14.4023.3.050 | COLLAR - ADJUSTABLE | 1 |
| 08 | 08.6000.3.010 | SCREW M3-10 | (1) |
| 09 | 17.0043.6.277 | RING | 2 |
| 10 | 17.0012.0.120 | SCREW M3-12 E | (2) |
| 11 | 10.1021.2.000 | RETAINER SPRING | (2) |
| 12 | 14.1070.4.000 | BLOCK VIBRATOR | (1) |
| 13 | 19.0002.4.409 | TOP BEARING - ASSEMBLY | 1 |
| 14 | 17.0042.1.283 | BUSHING,GUIDING | (1) |
| 15 | 19.0044.5.407 | GUIDE | (1) |
| 16 | 12.2010.1.001 | BEARING | (1) |
| 17 | 17.0027.4.084 | LOCK RING 6 | (1) |
| 18 | 10.1004.0.000 | WASHER - THIN FELD ●●● | 1 |
| 19 | 14.1022.3.000 | VIBRATOR GUIDE UNI | (2) |
| 20 | 14.1025.3.000 | BUTTON UNI | (2) |
| 21 | 08.6202.4.010 | SCREW M4-10 | 4 |
| 22 | 18.0011.2.400 | SCREW M5x0,5-3 | (2) |
| 23 | 02.0558.0.111 | NEEDLE | 1 |
| 24 | 17.0026.2.077 | SPRING | (1) |
| 25 | 19.0011.1.401 | SCREW | (1) |
| 26 | 17.0019.1.062 | WASHER | (2) |
| 27 | 01.5003.0.000 | SPRING | (2) |
| 28 | 14.1250.0.000 | BRACKET, NEDLE BAR GEAR | 2 |
| 29 | 08.6200.5.010 | SCREW M5-10 | 2 |
| 30 | 17.0027.1.419 | GUARD | 1 |
| 31 | 19.0041.0.692 | BUSHING ● | 1 |
| 32 | 11.1011.0.000 | COVER ●●● | 1 |
| 33 | 08.6400.3.005 | SCREW M3-5 | (2)+1 |
| 34 | 17.0082.8.017 | TENSION DISC | (2) |
| 35 | 17.0013.1.420 | SCREW | (1) |

# STITCH BITE DRIVE

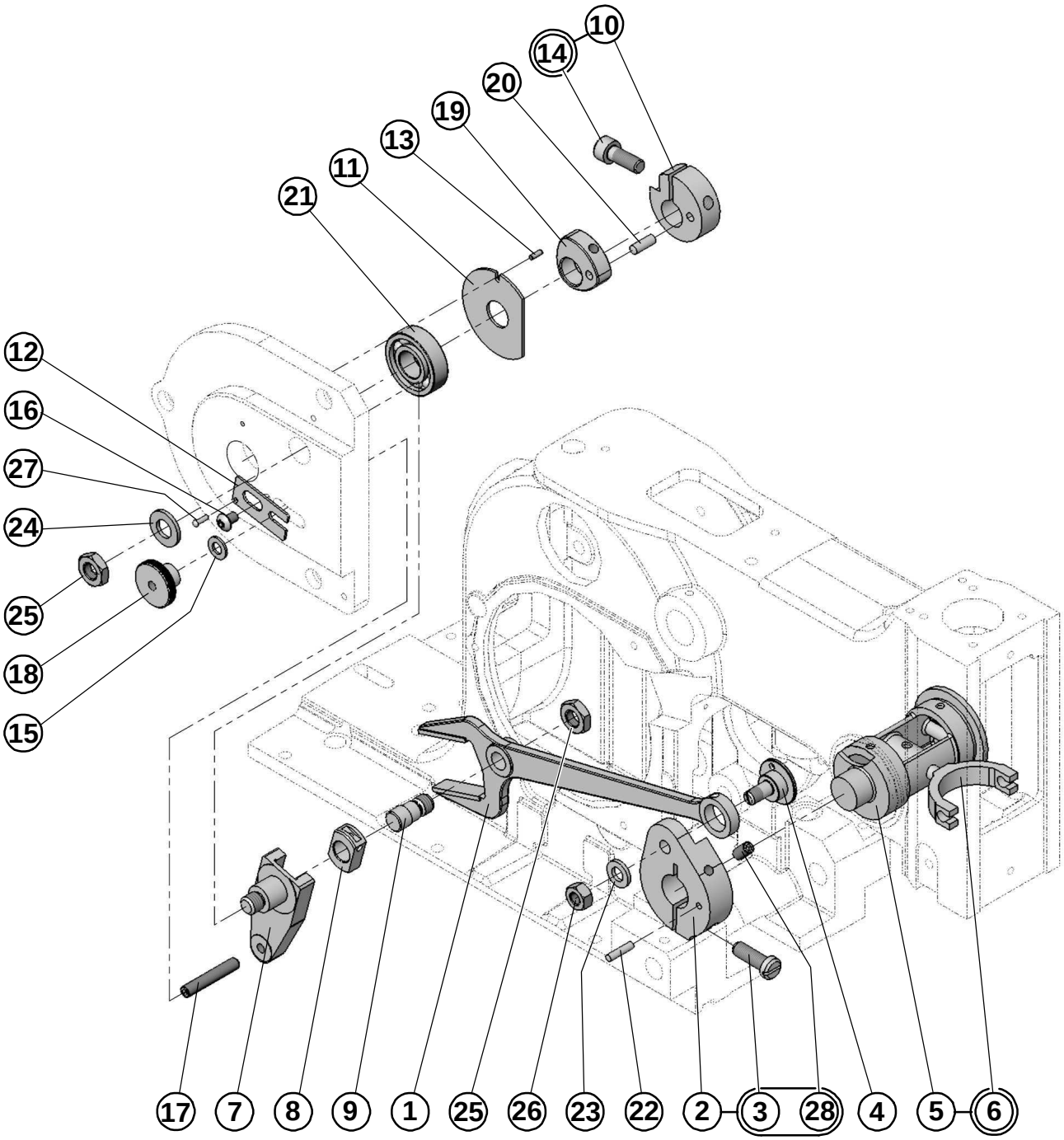

# STITCH BITE DRIVE

| DET | PART NUMBER | DESCRIPTION | QTY. |
|---|---|---|---|
| 01 | 11.1041.0.000 | FORK LEVER | 1 |
| 02 | 11.1038.1.000 | ROCKING LEVER | 1 |
| 03 | 17.0012.1.169 | SCREW M6x0,75-18 | (1) |
| 04 | 11.1039.0.000 | ECCENTRIC | 1 |
| 05 | 11.1035.0.000 | VIBRATION BARREL ● | 1 |
| 06 | 19.0063.4.400 | FORK | (1) |
| 07 | 11.1043.0.000 | BRACKET | 1 |
| 08 | 17.0045.1.099 | BLOCK, SLIDE | 1 |
| 09 | 17.0033.1.109 | SCREW | 1 |
| 10 | 15.4405.0.400 | COLLAR | 1 |
| 11 | 11.1037.0.000 | WASHER | 1 |
| 12 | 11.1040.0.000 | LIMITER | 1 |
| 13 | 12.1010.0.206 | PIN 2-6 | 1 |
| 14 | 08.6000.6.016 | SCREW M6-16 | (1) |
| 15 | 08.6850.5.000 | WASHER 5,3 | 1 |
| 16 | 08.6200.4.006 | SCREW M4-6 | 1 |
| 17 | 08.6400.5.030 | SCREW M5-30 | 1 |
| 18 | 17.0017.2.049 | NUT M5 | 1 |
| 19 | 19.0067.2.415 | CAM | 1 |
| 20 | 12.1010.0.412 | PIN 4n6x12 | 1 |
| 21 | 12.2010.0.011 | BEARING 6001 2Z | 1 |
| 22 | 12.1010.0.314 | PIN 3x14 | 1 |
| 23 | 08.6850.6.000 | WASHER 6,4 | 1 |
| 24 | 17.0019.0.662 | WASHER 8,4 | 1 |
| 25 | 17.0016.1.191 | NUT M8x1 LOW | 2 |
| 26 | 17.0016.1.118 | NUT M6x0,75 | 1 |
| 27 | 12.1016.0.002 | NAIL 1,86x6,35 | 1 |
| 28 | 08.6400.5.010 | SCREW M5-10 | (1) |

# THREAD GUIDE AND THREAD TENSION

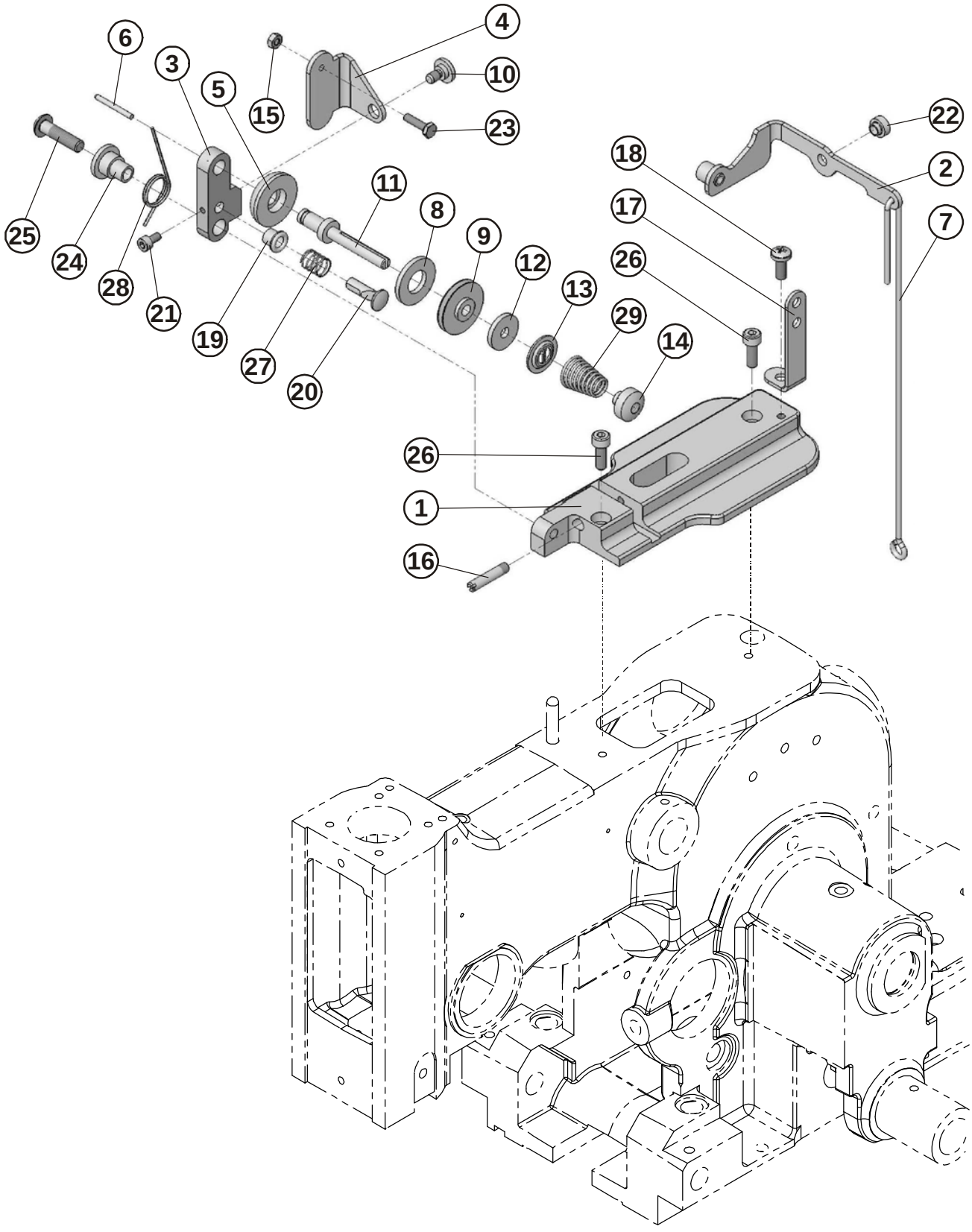

# THREAD GUIDE AND THREAD TENSION

| DET | PART NUMBER | DESCRIPTION | QTY. |
|---|---|---|---|
| 01 | 11.1159.0.000 | BRACKET TENSION ● | 1 |
| 02 | 11.1177.0.000 | LEVER | 1 |
| 03 | 11.1158.0.000 | LEVER | 1 |
| 04 | 11.1178.0.000 | RELEASE LEVER | 1 |
| 05 | 01.4074.0.000 | WASHER - ROUNDED | 1 |
| 06 | 10.1010.0.000 | ROD | 1 |
| 07 | 10.1083.0.000 | LINK - TENSION RELEASE | 1 |
| 08 | 10.1077.0.000 | WASHER - FELT | 1 |
| 09 | 10.1078.1.000 | TENSION ROLLER - ASSEMBLY | 1 |
| 10 | 17.0013.1.177 | STUD | 1 |
| 11 | 01.1113.0.000 | STUD | 1 |
| 12 | 10.1004.0.000 | WASHER - THIN FELD | 1 |
| 13 | 10.1003.0.000 | WASHER | 1 |
| 14 | 10.4030.0.000 | NUT - KNURLED | 1 |
| 15 | 08.6700.3.000 | NUT M3 | 1 |
| 16 | 19.0011.1.402 | BITE SCREW | 1 |
| 17 | 05.0043.1.000 | THREAD GUIDE | 1 |
| 18 | 08.6032.4.010 | SCREW M4-10 | 1 |
| 19 | 10.1009.0.000 | BUSHING | 1 |
| 20 | 10.1008.0.000 | GUIDE | 1 |
| 21 | 08.6000.3.006 | SCREW M3-6 | 1 |
| 22 | 11.1175.0.000 | BUSHING | 1 |
| 23 | 08.6310.3.012 | SCREW M3-12 | 1 |
| 24 | 11.1044.0.000 | BUSHING | 1 |
| 25 | 08.6200.5.020 | SCREW M5-20 | 1 |
| 26 | 08.6000.4.016 | SCREW M4-16 | 2 |
| 27 | 01.5002.0.000 | SPRING - COMPRESSION | 1 |
| 28 | 01.5163.0.000 | SPRING - TORSION | 1 |
| 29 | 01.5603.0.000 | SPRING - CONCAL | 1 |

# THREAD TAKE UP LEVER

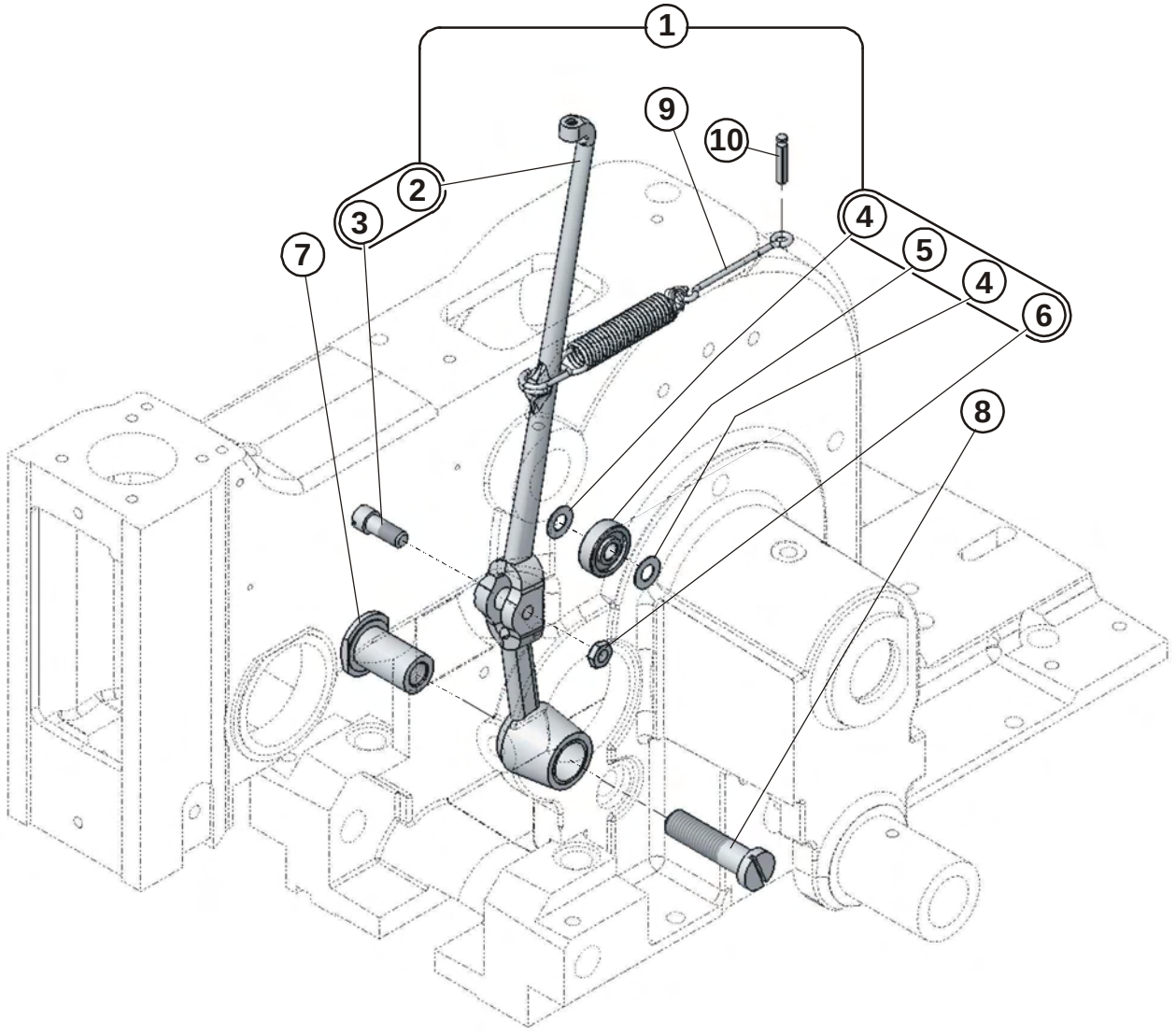

# THREAD TAKE UP LEVER

| DET | PART NUMBER | DESCRIPTION | QTY. |
|---|---|---|---|
| 01 | 11.1051.0.050 | LEVER - TAKE UP - ASSEMBLY | 1 |
| 02 | 11.1051.0.000 | LEVER - TAKE UP ● | (1) |
| 03 | 11.1052.0.000 | STUD | (1) |
| 04 | 01.4751.0.000 | WASHER | (2) |
| 05 | 01.7630.0.001 | BALL BEARING | (1) |
| 06 | 17.0016.1.054 | NUT M5x0,5-2,5 | (1) |
| 07 | 11.1054.0.000 | BUSHING PIVOT | 1 |
| 08 | 17.0013.2.086 | SCREW M8x1-32 | 1 |
| 09 | 01.5005.0.001 | SPRING - ASSEMBLY | 1 |
| 10 | 17.0031.1.089 | PIN 3-16 | 1 |

# LOOPER DRIVE

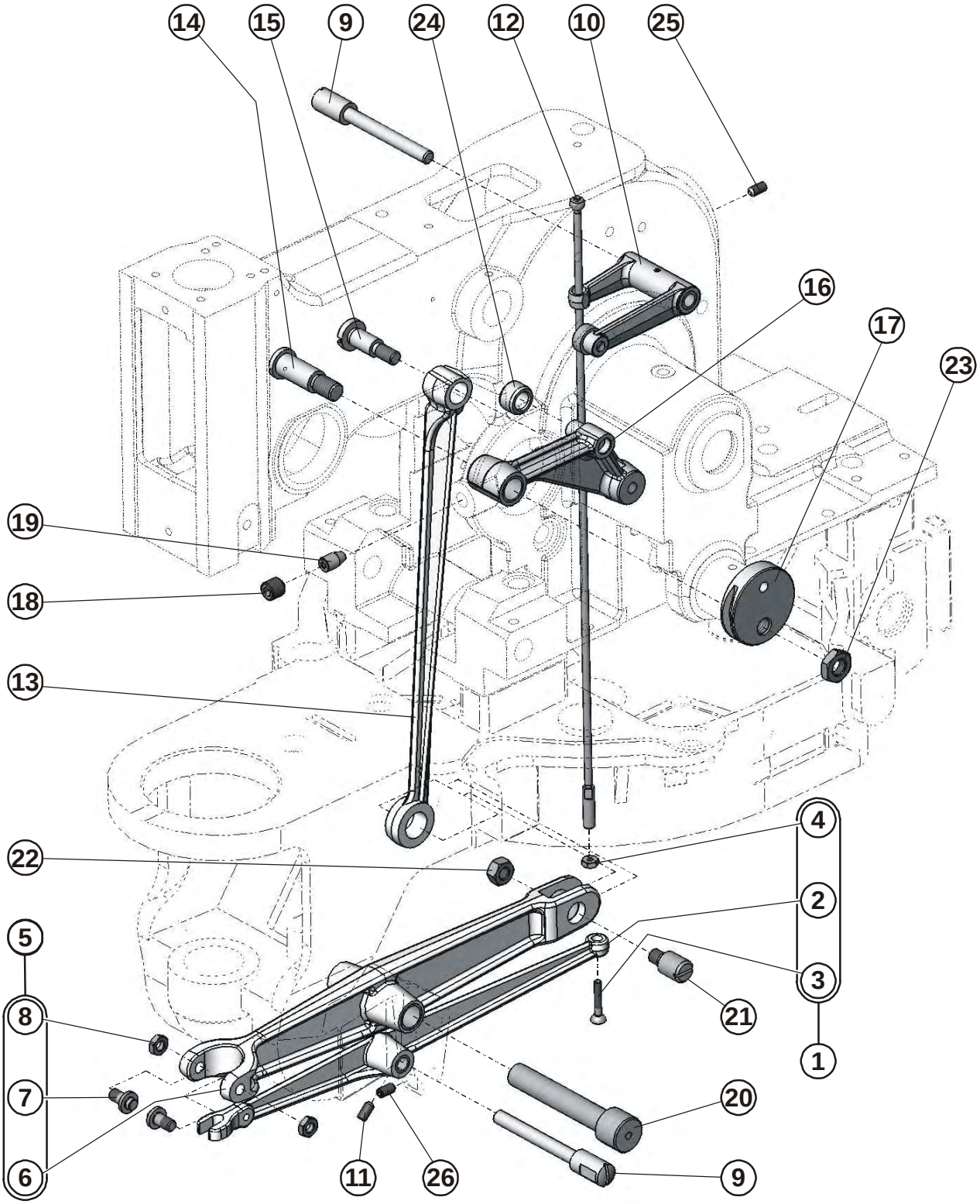

# LOOPER DRIVE

| DET | PART NUMBER | DESCRIPTION | QTY. |
|---|---|---|---|
| 01 | 11.3004.0.050 | SPREADER ROCKER - ASSEMBLY | 1 |
| 02 | 11.3004.0.000 | SPREADER ROCKER ● | (1) |
| 03 | 11.1061.0.000 | SCREW BALL | (1) |
| 04 | 08.6700.3.000 | NUT M3 | (1) |
| 05 | 11.3006.0.050 | LOOPER ROCKER - ASSEMBLY | 1 |
| 06 | 11.3006.0.000 | LOOPER ROCKER ● | (1) |
| 07 | 17.0033.3.131 | PLUG | (2) |
| 08 | 08.6710.5.000 | NUT M5 | (2) |
| 09 | 11.1059.0.000 | PLUG | 2 |
| 10 | 11.1058.0.050 | SPREADER CAM FOLLOWER ● | 1 |
| 11 | 08.6400.4.008 | SCREW M4-8 | 1 |
| 12 | 11.1060.0.050 | ROD - ASSEMBLY | 1 |
| 13 | 11.1067.0.000 | LINK LOOPER ● | 1 |
| 14 | 11.1063.0.000 | SCREW | 1 |
| 15 | 11.1066.0.000 | SCREW - SHOULDER | 1 |
| 16 | 11.1064.0.000 | CAM FOLLOWER ● | 1 |
| 17 | 11.1026.0.000 | CORE DISC | 1 |
| 18 | 08.6400.8.008 | SCREW M8-8 | 1 |
| 19 | 10.1062.0.000 | JAM PLUG ●● | 1 |
| 20 | 19.0032.6.401 | PLUG | 1 |
| 21 | 17.0033.1.011 | PLUG | 1 |
| 22 | 08.6700.6.300 | NUT M6x0,75 | 1 |
| 23 | 08.6710.8.400 | NUT M8x1 | 1 |
| 24 | 11.1122.0.980 | ROLL 15 | 1 |
| 25 | 08.6400.5.008 | SCREW M5x8 | 1 |
| 26 | 08.6400.4.006 | SCREW M4-6 | 1 |

# LUBRICATION

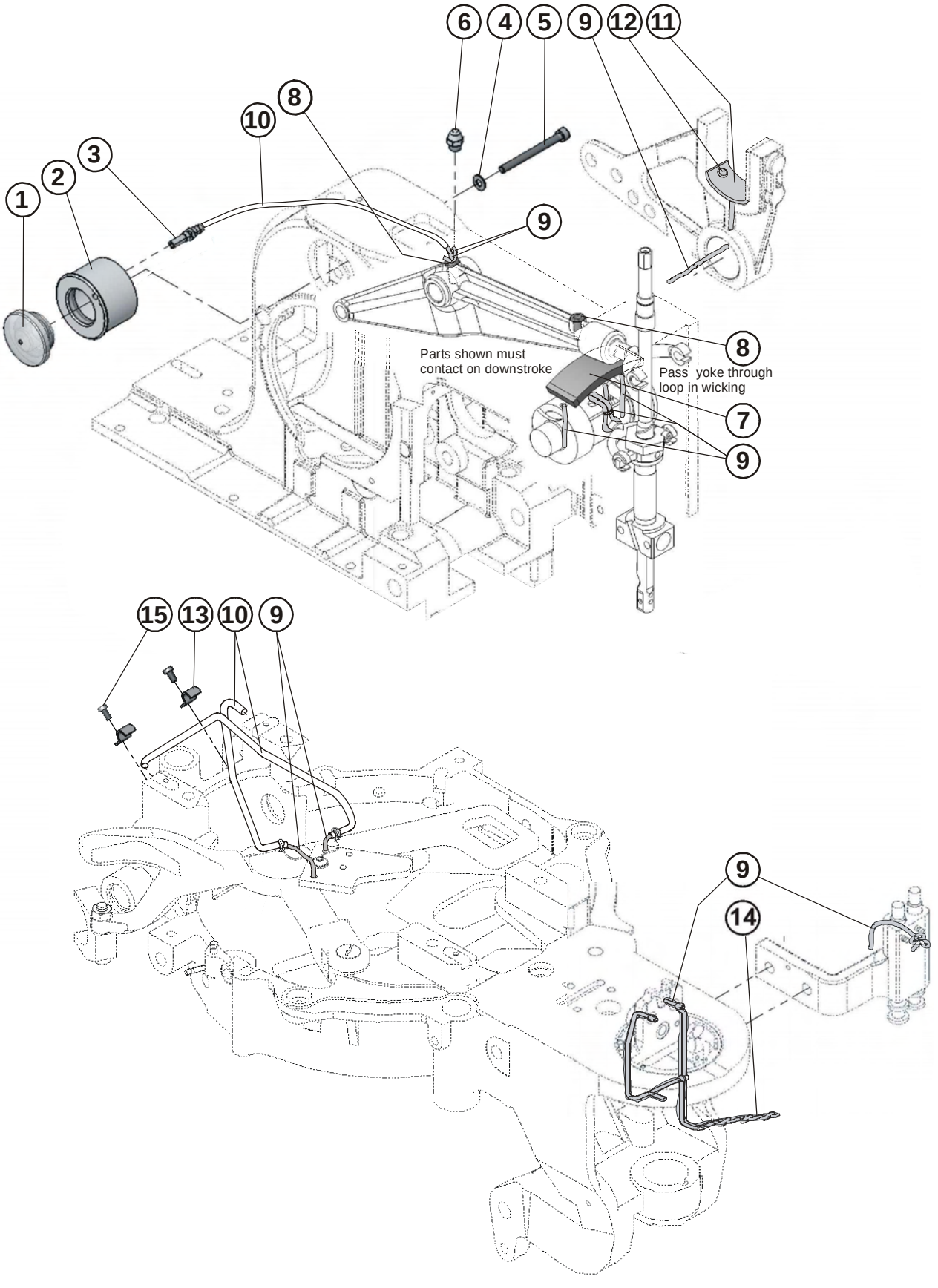

# LUBRICATION

| DET | PART NUMBER | DESCRIPTION | QTY. |
|---|---|---|---|
| 01 | 17.0095.1.329 | OIL INDICATOR ●●● | 1 |
| 02 | 22.0104.0.000 | OIL GAUGE RESERVOIR | 1 |
| 03 | 22.0229.0.000 | STRAIGHT FITTING | 1 |
| 04 | 08.6850.4.000 | WASHER M4 | 1 |
| 05 | 08.6000.4.045 | SCREW M4-45 | 1 |
| 06 | 17.0004.7.242 | PLUG M6 | 1 |
| 07 | 14.1015.0.000 | PAD OIL - VIBRATOR BARREL ●●● | 1 |
| 08 | 05.1105.0.000 | INLET-OIL ●● | 2 |
| 09 | 11.1030.0.000 | WICK ●●● | 1 |
| 10 | 11.1031.0.000 | OIL TUBE ●●● | 1 |
| 11 | 14.1029.0.000 | OIL PAD ●●● | 1 |
| 12 | 12.4021.0.312 | RIVET 3x12 AL ● | 1 |
| 13 | 17.0082.6.000 | CLAMP | 2 |
| 14 | 07.0401.0.009 | WICKING ●●● | 1 |
| 15 | 08.6010.3.006 | SCREW M3-6 ISO 1207 | 2 |

# RACE

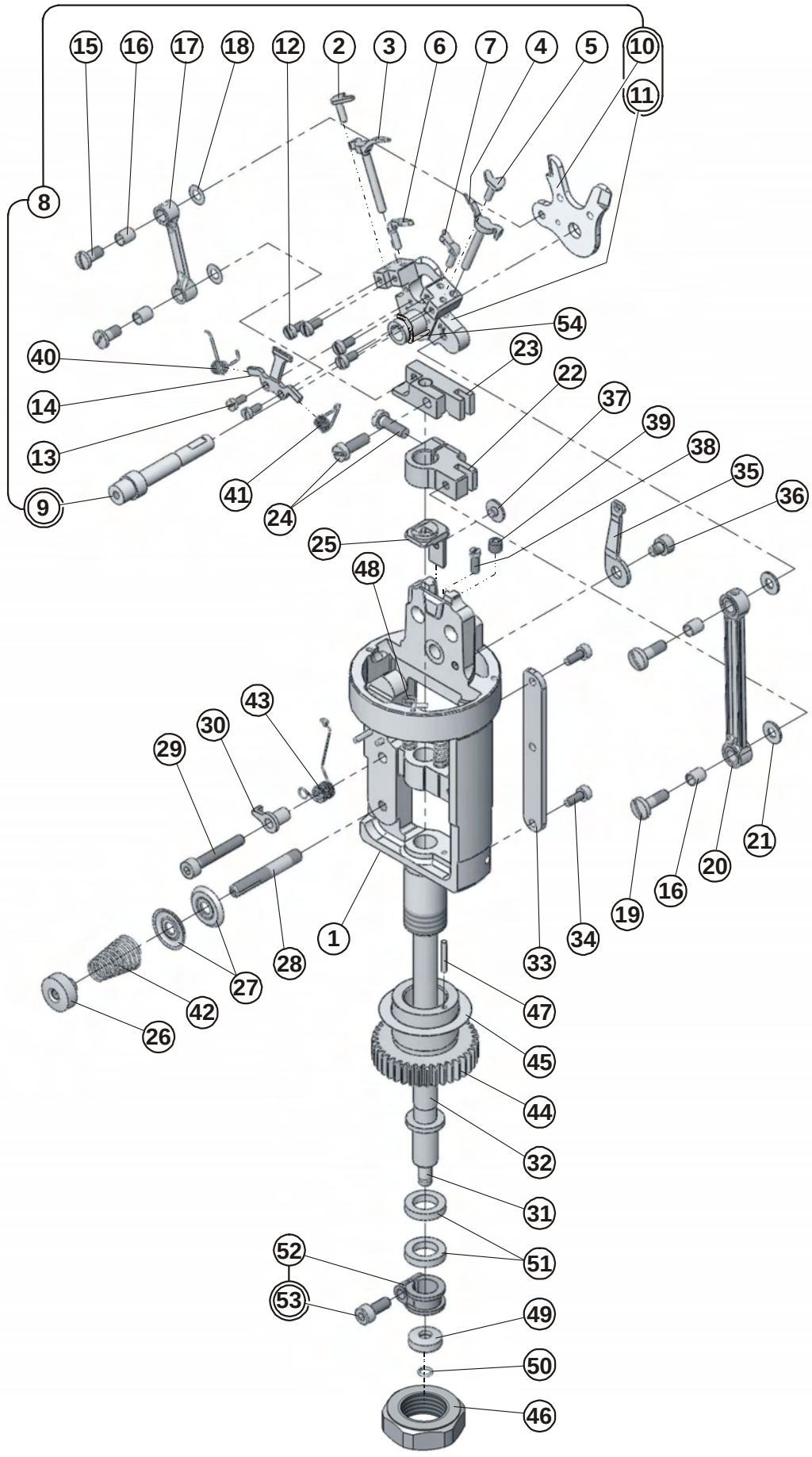
15
16
17
18
12
2
3
6
7
4
5
10
11
8
54
40
23
22
37
39
38
35
36
14
13
41
24
9
25
48
43
30
29
1
28
27
42
26
33
34
47
45
44
32
31
52
51
53
49
50
46
21
20
16
19

# RACE

| DET | PART NUMBER | DESCRIPTION | QTY. |
|---|---|---|---|
| 01 | 11.4001.0.050 | RACE - ASSEMBLY | 1 |
| 02 | 11.4007.0.000 | SPREADER STOP LH | 1 |
| 03 | 11.4009.0.000 | SPREADER LH | 1 |
| 04 | 11.4008.0.000 | SPREADER RH | 1 |
| 05 | 11.4006.0.000 | SPREADER STOP RH | 1 |
| 06 | 11.4005.0.000 | EYE LOOPER | 1 |
| 07 | 11.4004.0.000 | BLIND LOOPER | 1 |
| 08 | 11.4002.0.050 | CUPPER CARRIER - ASSEMBLY | 1 |
| 09 | 11.4201.0.000 | STUD LOOPER CARRIER | (1) |
| 10 | 11.4011.0.000 | SPREADER WEDGE - CB | (1) |
| 11 | 11.4002.0.000 | CARRIER - LOOPER ● | (1) |
| 12 | 08.6010.3.006 | SCREW M3-6 | 4 |
| 13 | 17.0012.0.404 | SCREW | 2 |
| 14 | 10.4010.2.000 | NEEDLE GUARD | 1 |
| 15 | 17.0012.1.140 | SCREW | 2 |
| 16 | 17.0041.1.094 | BUSHING | 4 |
| 17 | 19.0063.1.073 | SPREADER LINK | 1 |
| 18 | 17.0019.0.228 | WASHER | 2 |
| 19 | 17.0012.1.142 | SCREW | 2 |
| 20 | 17.0004.4.829 | LOOPER LINK | 2 |
| 21 | 17.0019.1.088 | WASHER | 2 |
| 22 | 17.0074.4.405 | CLAMP ● | 1 |
| 23 | 17.0064.6.117 | CLAMP ● | 1 |
| 24 | 08.6010.4.012 | SCREW M4-12 | 2 |
| 25 | 10.4012.2.004 | THROAT PLATE | 1 |
| 26 | 17.0017.1.016 | NUT | 1 |
| 27 | 17.0082.8.084 | TENSION PLATE | 2 |
| 28 | 17.0011.8.041 | SCREW | 1 |
| 29 | 08.6000.4.025 | SCREW M4-25 | 1 |
| 30 | 17.0064.7.162 | PLATE | 1 |
| 31 | 11.4020.0.000 | SPREADER SPINDLE | 1 |
| 32 | 19.0034.6.402 | SHAFT, LOOPER DRIVE ● | 2 |
| 33 | 17.0081.5.082 | WIRE | 1 |
| 34 | 08.6000.3.008 | SCREW M3-8 | 2 |
| 35 | 10.4035.0.000 | CORD GUIDE | 1 |
| 36 | 08.6000.4.005 | SCREW M4-5 | 1 |
| 37 | 01.2056.1.000 | SCREW - FULL THREADER | 1 |
| 38 | 17.0012.2.400 | SCREW | 1 |
| 39 | 08.6400.5.005 | SCREW M5-5 | 1 |
| 40 | 01.5620.0.000 | SPRING LH | 1 |
| 41 | 01.5619.0.000 | SPRING RH | 1 |
| 42 | 17.0026.2.078 | SPRING | 1 |
| 43 | 17.0026.4.035 | SPRING | 1 |
| 44 | 17.0055.1.158 | GEAR | 1 |
| 45 | 01.4081.0.005 | WASHER - PLAIN (0.005") | 1 |
| 46 | 17.0016.1.093 | NUT | 1 |
| 47 | 17.0031.0.406 | PIN | 1 |
| 48 | 01.5026.0.000 | SPRING - COMPRESION | 2 |
| 49 | 19.0041.2.404 | ROLL | 1 |
| 50 | 17.0027.4.045 | RING | 1 |

# RACE

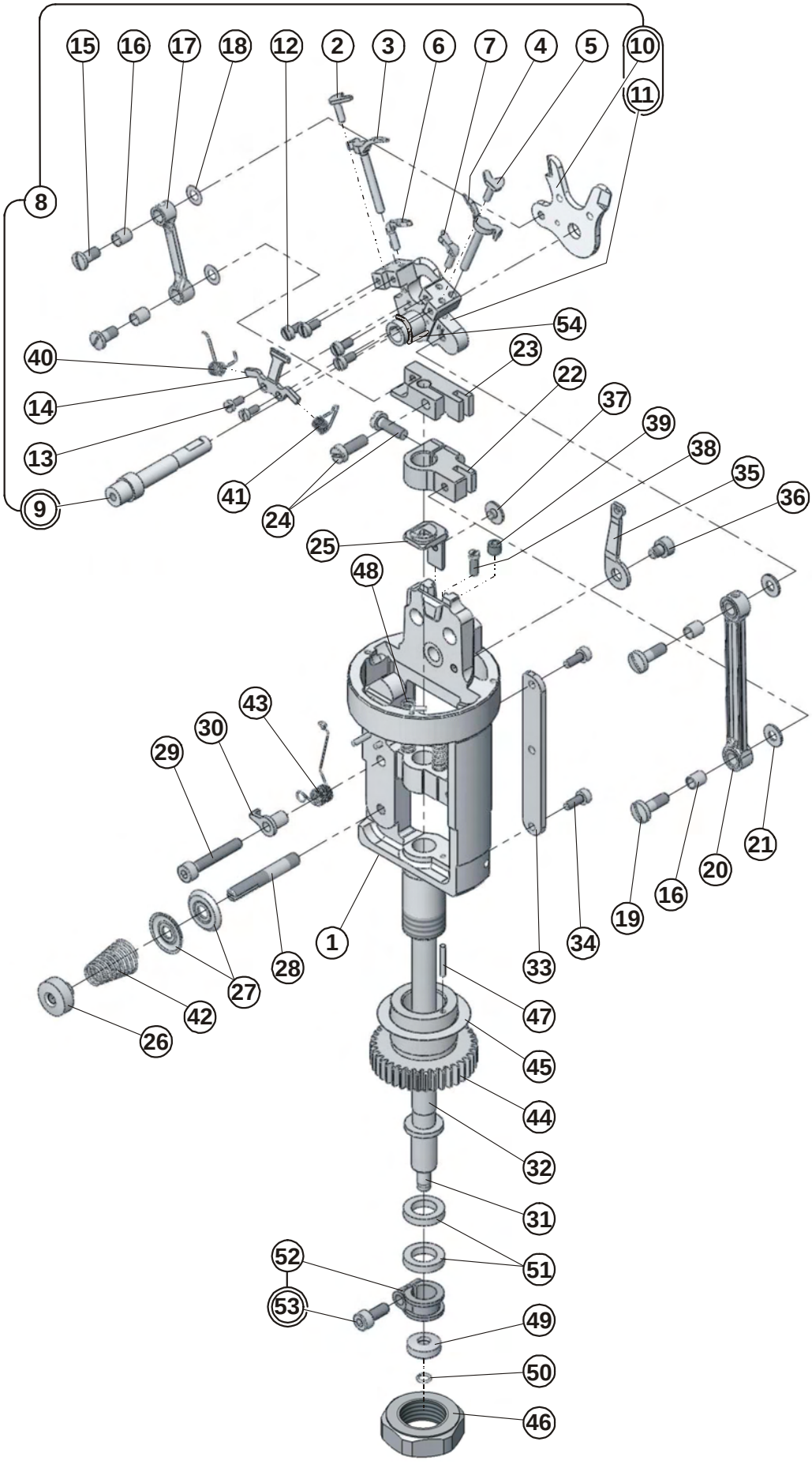
15
16
17
18
12
2
3
6
7
4
5
10
11
8
54
40
23
22
14
37
39
38
35
36
13
41
24
9
25
48
43
30
29
1
28
27
42
26
33
34
47
45
44
32
31
52
51
53
49
50
46
19
16
20
21

# RACE

| DET | PART NUMBER | DESCRIPTION | QTY. |
|---|---|---|---|
| 51 | 17.0019.0.398 | RING | 2 |
| 52 | 19.0043.6.441 | CLAMP ● | 1 |
| 53 | 08.6000.4.010 | SCREW M4-10 | (1) |
| 54 | 07.0401.0.000 | LOOPER CAR ●●● | 1 |

# MAIN CAM DRIVE SHAFT

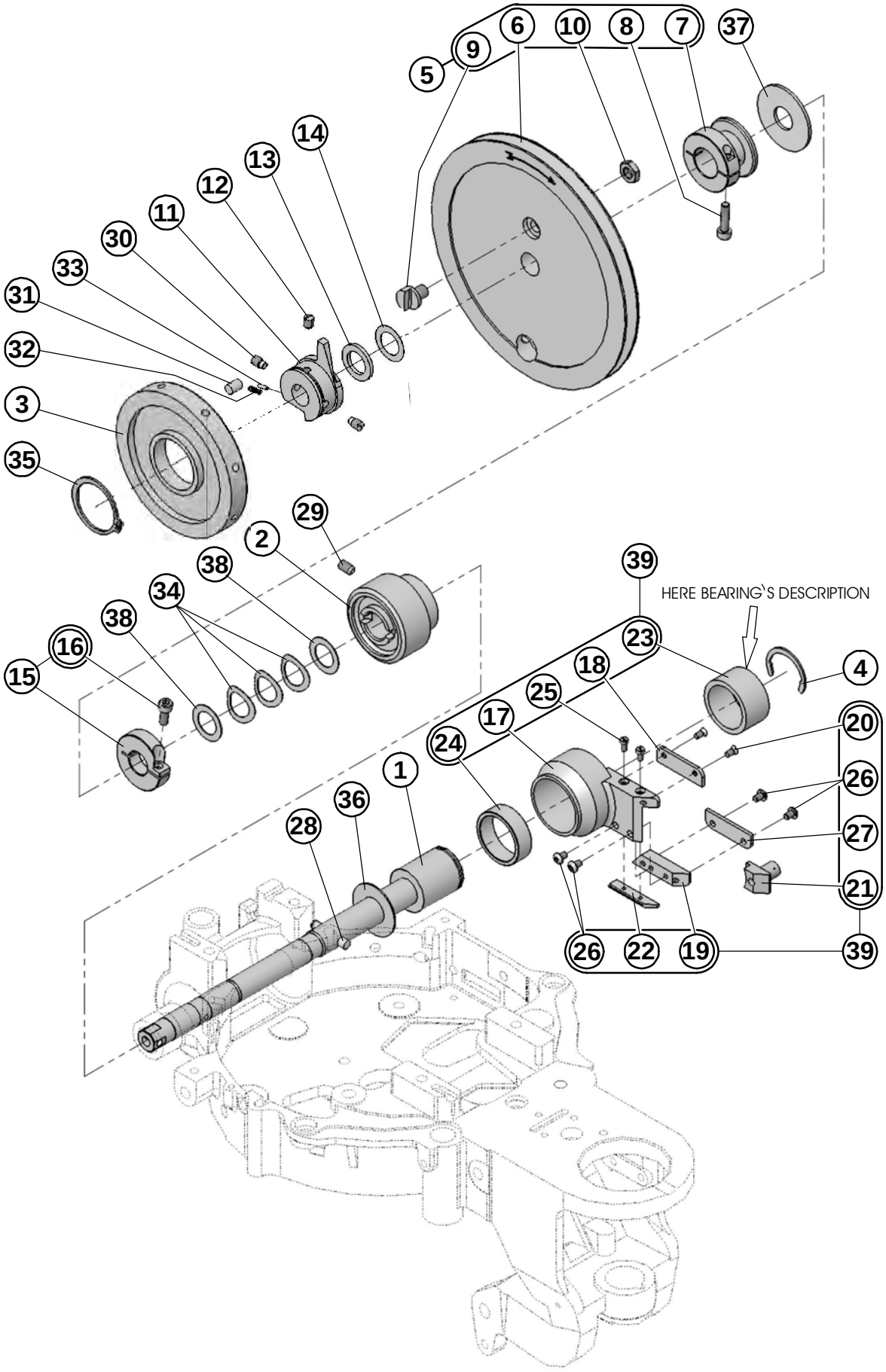

# MAIN CAM DRIVE SHAFT

| DET | PART NUMBER | DESCRIPTION | QTY. |
|---|---|---|---|
| 01 | 11.3047.0.000 | SHAFT | 1 |
| 02 | 11.3050.0.000 | GEAR | 1 |
| 03 | 11.3110.0.000 | HAND WHEEL | 1 |
| 04 | 01.6970.0.000 | RETAING RING | 1 |
| 05 | 17.0004.5.386 | PULLEY - ASSEMBLY | 1 |
| 06 | 17.0052.0.315 | PULLEY | (1) |
| 07 | 17.0044.5114 | SPOOL | (1) |
| 08 | 08.6000.5.020 | SCREW M5-20 | (1) |
| 09 | 17.0033.5.113 | DOG | (1) |
| 10 | 08.6710.8.400 | NUT M8x1 | (1) |
| 11 | 11.3123.0.000 | DRIVE HUB | 1 |
| 12 | 17.0011.2.014 | SCREW M6x0,75-8 | 1 |
| 13 | 17.0094.1.143 | BUSHING RUBBER | 1 |
| 14 | 17.0019.0.610 | WASHER | 1 |
| 15 | 11.3046.0.000 | FRICTION COLLAR | 1 |
| 16 | 08.6000.5.016 | SCREW M5-16 | (1) |
| 17 | 14.3100.0.901 | ARM - FEED CLUTCH | (1) |
| 18 | 10.3080.0.000 | OUTER PLATE | (1) |
| 19 | 11.3101.0.000 | WEAR PLATE | (1) |
| 20 | 01.2075.0.000 | SCREW | (2) |
| 21 | 11.3079.0.000 | SLIDE STUD | (1) |
| 22 | 11.3082.0.000 | PLATE, INNER | (1) |
| 23 | 12.2090.0.003 | BUSHING | (1) |
| 24 | 01.7040.0.000 | COLLAR | (1) |
| 25 | 08.6010.3.006 | SCREW M3-6 | (2) |
| 26 | 08.6200.4.006 | SCREW M4-6 | (4) |
| 27 | 11.3080.0.000 | OUTER PLATE | (1) |
| 28 | 12.1010.0.630 | PIN 6-30 | 1 |
| 29 | 08.6400.6.010 | SCREW M6-10 | 1 |
| 30 | 17.0011.2.063 | SCREW M6x0,75 - 10 | 2 |
| 31 | 12.2099.1.006 | BEARING ROLLER | 1 |
| 32 | 17.0026.0.213 | SPRING | 1 |
| 33 | 12.1010.0.212 | PIN | 1 |
| 34 | 01.5683.0.000 | DISC SPRING 5/8 | 3 |
| 35 | 12.1045.1.010 | LOCK RING 35 | 1 |
| 36 | 11.3054.0.000 | WASHER | 1 |
| 37 | 17.0094.3.142 | WASHER FELT | 1 |
| 38 | 01.4007.0.000 | SHIM RING | 2 |
| 39 | 11.3100.0.050 | FEED CLUTCH - ASSEMBLY | 1 |

# MAIN CAM

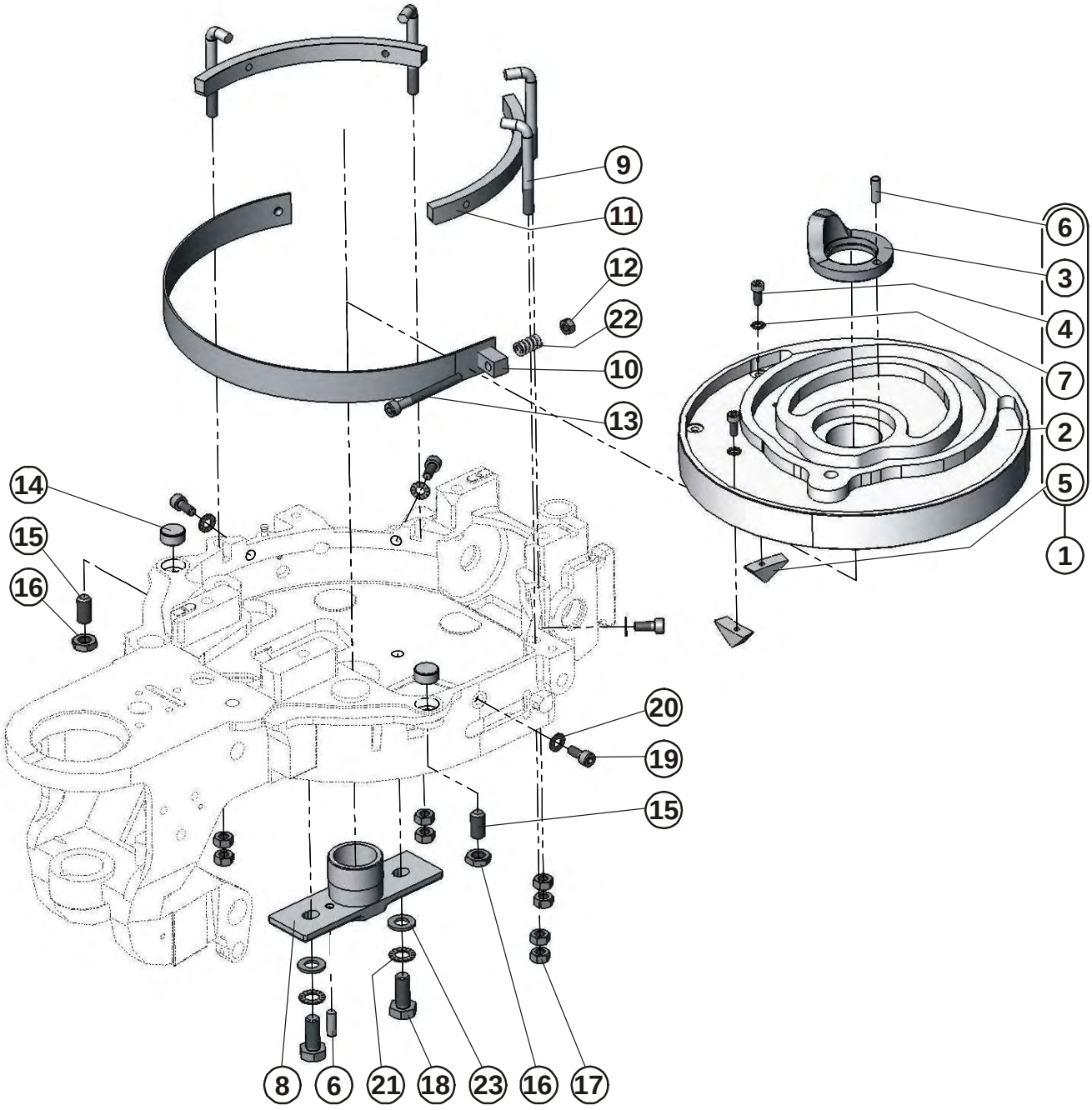

# MAIN CAM

| DET | PART NUMBER | DESCRIPTION | QTY. |
|---|---|---|---|
| 01 | 11.3064.0.050 | MAIN CAM - ASSEMBLY FOR EYE 2,8X4,2 | 1 |
| 01 | 11.3065.0.050 | MAIN CAM - ASSEMBLY FOR EYE 3,4X4,2 | 1 |
| 02 | 11.3064.0.000 | MAIN CAM | (1) |
| 02 | 11.3065.0.000 | MAIN CAM | (1) |
| 03 | 11.3062.0.000 | CUTTING CAM | (1) |
| 04 | 08.6000.4.010 | SCREW M4-10 | (2) |
| 05 | 11.3061.0.000 | WEDGE - CLEMPING | (2) |
| 06 | 12.1010.0.516 | PIN 5-16 | 1+(1) |
| 07 | 08.6832.4.000 | WASHER M4 | (2) |
| 08 | 11.3027.0.000 | CAM CENTER | 1 |
| 09 | 11.3066.0.000 | HOOK | 4 |
| 10 | 17.0002.7.589 | BRAKE BAND - ASSEMBLY ●● | 1 |
| 11 | 11.3035.0.000 | GIB HOLD DOWN | 2 |
| 12 | 08.6700.5.000 | NUT M5 | 1 |
| 13 | 08.6000.5.050 | SCREW M5-50 | 1 |
| 14 | 17.0019.2.021 | STONE | 2 |
| 15 | 08.6400.8.416 | SCREW M8x1-16 | 2 |
| 16 | 08.6710.8.400 | NUT M8x1 | 2 |
| 17 | 08.6700.6.300 | NUT M6x0,75 | 8 |
| 18 | 08.6300.8.020 | SCREW M8-20 | 2 |
| 19 | 08.6000.5.012 | SCREW M5-12 | 4 |
| 20 | 08.6850.5.000 | WASHER M5 | 4 |
| 21 | 08.6850.8.000 | WASHER M8 | 2 |
| 22 | 18.0026.0.601 | SPRING - COMPRESSION | 1 |
| 23 | 08.6832.8.000 | WASHER M8 | 2 |

# FEEDING AND DENSITY MECHANISM

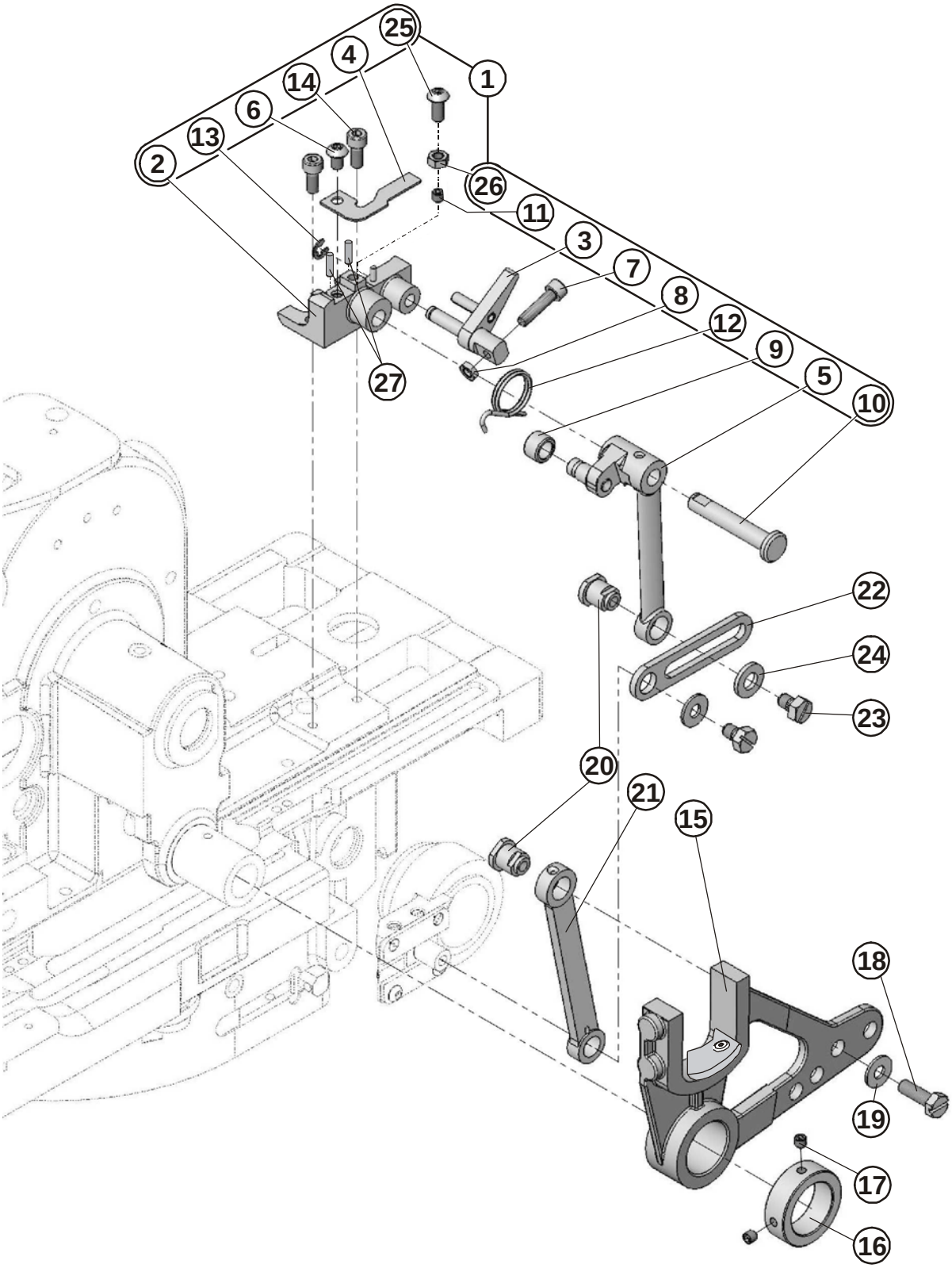

# FEEDING AND DENSITY MECHANISM

| DET | PART NUMBER | DESCRIPTION | QTY. |
|---|---|---|---|
| 01 | 11.1167.0.050 | LINE SHIFTER - ASSEMBLY | 1 |
| 02 | 11.1167.0.000 | SHIFTER BLOCK | (1) |
| 03 | 11.1169.0.000 | SHIFTER - ASSEMBLY | (1) |
| 04 | 01.5447.0.000 | SPRING - FLAT | (1) |
| 05 | 11.1168.0.000 | LINK | (1) |
| 06 | 08.6200.5.008 | SCREW M5-8 | (1) |
| 07 | 08.6000.5.020 | SCREW M5-20 | (1) |
| 08 | 08.6710.5.000 | NUT M5 | (1) |
| 09 | 17.0041.8.008 | ROLL | (1) |
| 10 | 11.1184.0.000 | STUD | (1) |
| 11 | 08.6400.5.005 | SCREW M5-5 | (1) |
| 12 | 01.5448.0.000 | SPRING - TORSION | (1) |
| 13 | 12.1045.0.004 | RETAINING RING 4 | (1) |
| 14 | 08.6000.5.012 | SCREW M5-12 | (2) |
| 15 | 11.1108.0.000 | FEED CAM FOLLOWER | 1 |
| 16 | 11.1111.0.000 | COLLAR | 1 |
| 17 | 08.6400.5.305 | SCREW M5x0,5- 5 | 2 |
| 18 | 17.0014.1.068 | SCREW M6x0,75-23 | 1 |
| 19 | 17.0019.0.230 | WASHER | 2 |
| 20 | 11.1171.0.000 | STUD | 2 |
| 21 | 11.1109.0.000 | LINK | 1 |
| 22 | 11.3081.0.000 | ARM - MASCHINING | 1 |
| 23 | 17.0014.1.015 | SCREW M6x0,75-9 | 2 |
| 24 | 11.3083.0.000 | WASHER | 1 |
| 25 | 08.6200.5.012 | SCREW M5-12 | (1) |
| 26 | 08.6700.5.000 | NUT M5 | (1) |
| 27 | 12.1010.0.310 | PIN 3x10 | 2 |

# TREBLE-ARM LEVER AND SEWING SWITCH-OFF

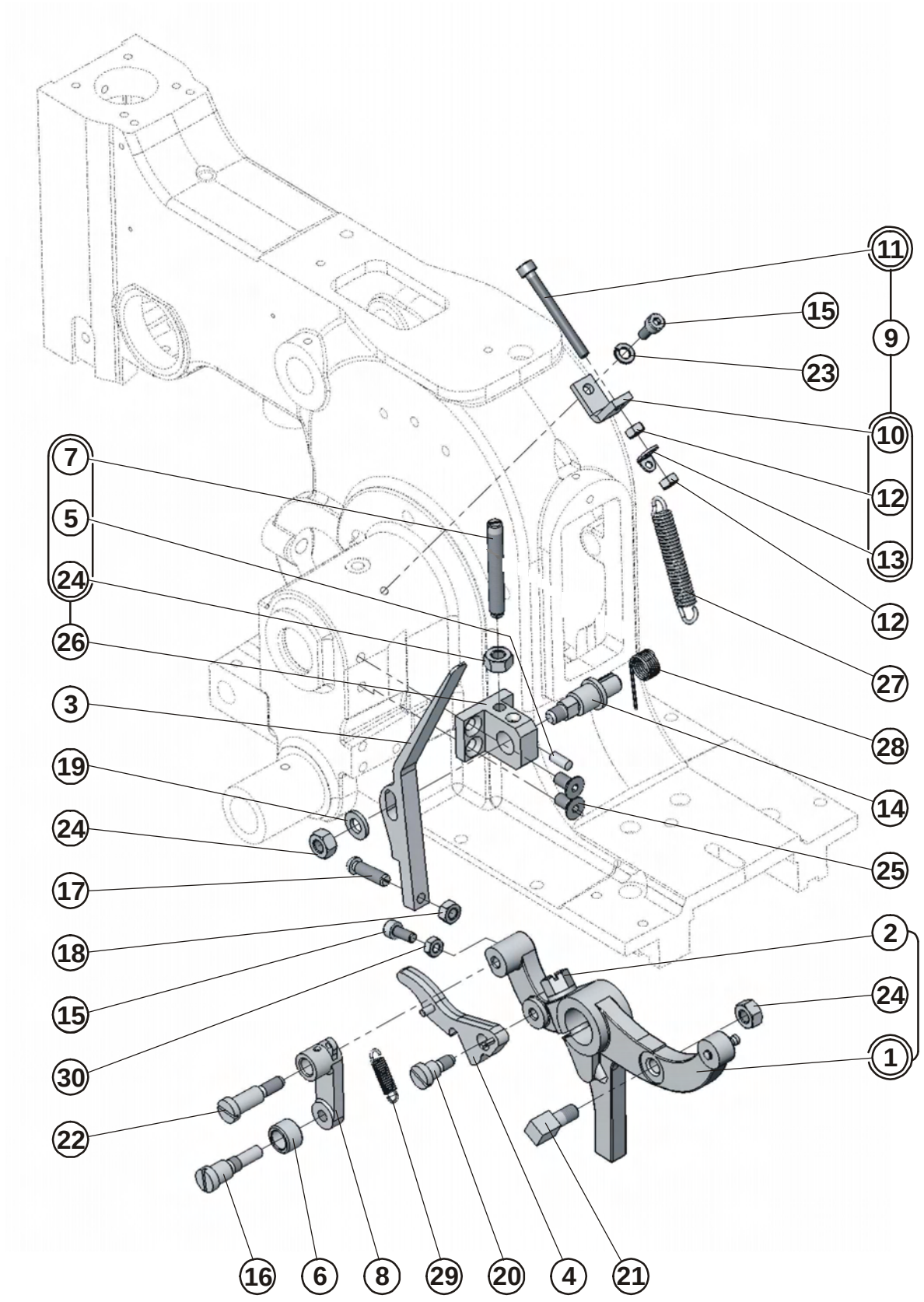

# TREBLE-ARM LEVER AND SEWING SWITCH-OFF

| DET | PART NUMBER | DESCRIPTION | QTY. |
|---|---|---|---|
| 01 | 11.1113.0.000 | THREE FORK LEVER | 1 |
| 02 | 17.0014.1.205 | SCREW M8x0,75-22.5 | (1) |
| 03 | 11.1124.0.000 | TRIP LEVER | 1 |
| 04 | 11.1118.0.000 | LEVER | 1 |
| 05 | 12.1014.0.007 | PIN 4-12 | (1) |
| 06 | 17.0041.8.008 | ROLL | 1 |
| 07 | 17.0011.3.022 | SCREW M6-45 | (1) |
| 08 | 11.1120.0.000 | LEVER | 1 |
| 09 | 01.5055.0.051 | LENE SPRINNG BRACKER - ASSEMBLY | 1 |
| 10 | 14.1099.0.000 | SPRING BRACKET | (1) |
| 11 | 08.6000.4.040 | SCREW M4-40 | (1) |
| 12 | 08.6700.4.000 | NUT M4 | (2) |
| 13 | 14.5034.0.000 | CORD GUIDE | (1) |
| 14 | 17.0033.3.053 | STUD | 1 |
| 15 | 08.6000.4.010 | SCREW M4-10 | 2 |
| 16 | 17.0013.1.419 | SCREW M6x0,75-26 E | 1 |
| 17 | 17.0012.4.011 | SCREW M5-17,5 | 1 |
| 18 | 08.6700.5.000 | NUT M5 | 1 |
| 19 | 08.6850.6.000 | WASHER 6,4 | 1 |
| 20 | 17.0013.1.417 | PLUG | 1 |
| 21 | 17.0014.4.001 | STUD M6-12 | 1 |
| 22 | 17.0013.1.418 | SCREW M5-27 | 1 |
| 23 | 08.6800.4.000 | WASHER 4 | 1 |
| 24 | 08.6700.6.000 | NUT M6 | 2+(1) |
| 25 | 08.6100.5.010 | SCREW M5-10 | 2 |
| 26 | 17.0064.5.174 | BRACKET | 1 |
| 27 | 01.5055.0.000 | SPRING - EXTENSION | 1 |
| 28 | 17.0026.4.036 | TORSION SPRING | 1 |
| 29 | 17.0026.3.126 | SPRING | 1 |
| 30 | 08.6700.4.000 | NUT M4 | 1 |

# ROCKING LEVER

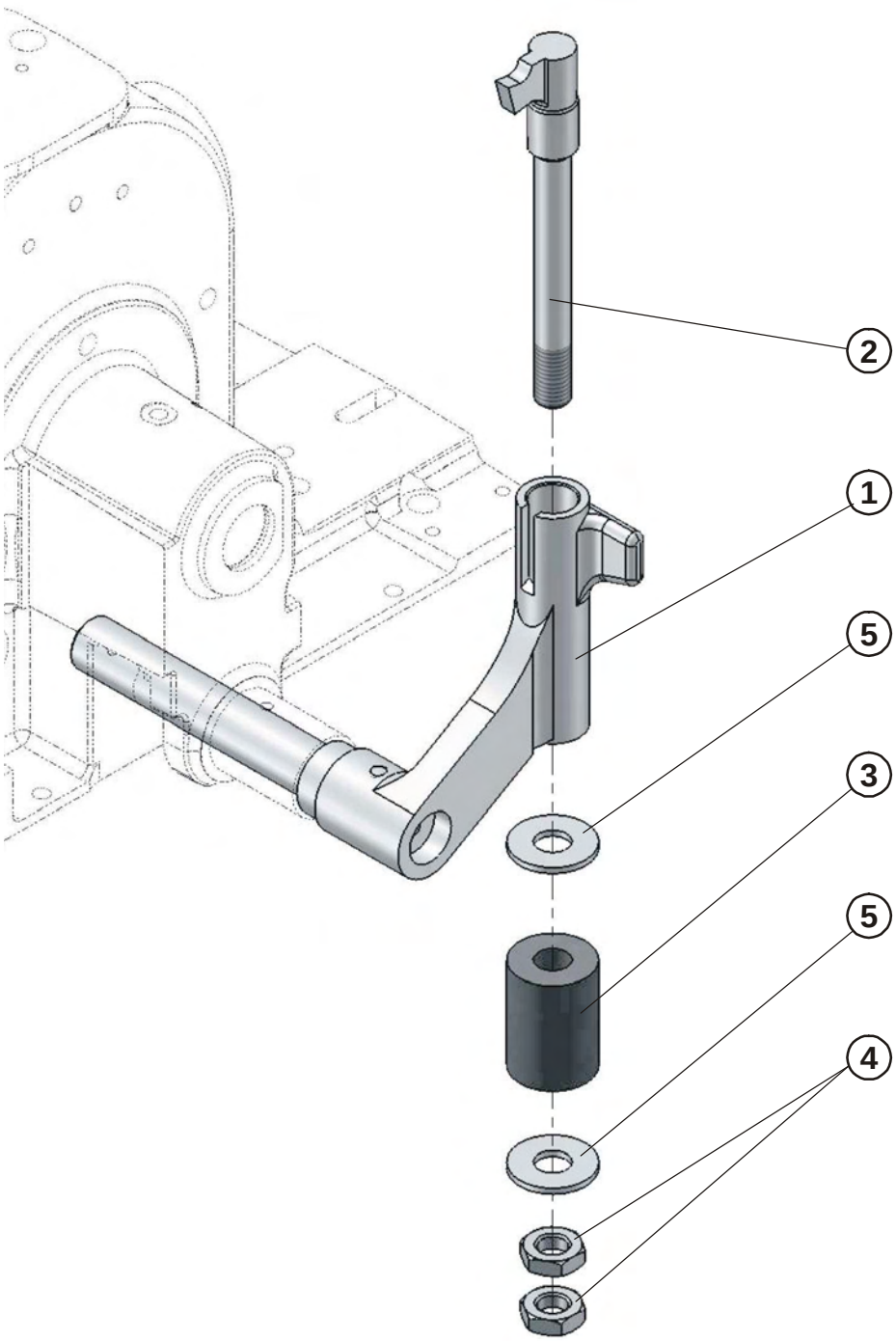

# ROCKING LEVER

| DET | PART NUMBER | DESCRIPTION | QTY. |
|---|---|---|---|
| 01 | 11.1102.0.000 | BREAKE- ASSEMBLY | 1 |
| 02 | 17.0062.5.020 | BOLT | 1 |
| 03 | 11.1101.0.990 | SPRING, ELASTOMER ●●● | 1 |
| 04 | 08.6717.0.000 | NUT M10 | 2 |
| 05 | 08.6872.0.000 | WASHER 10 | 2 |


E-mail: service@amfreece.cz; parts@amfreece.cz; website: www.amfreece.com
Phone: +420 582 309 286; Fax: +420 582 360 606

# UPPER THREAD TRIMMER AND THREAD GUIDE

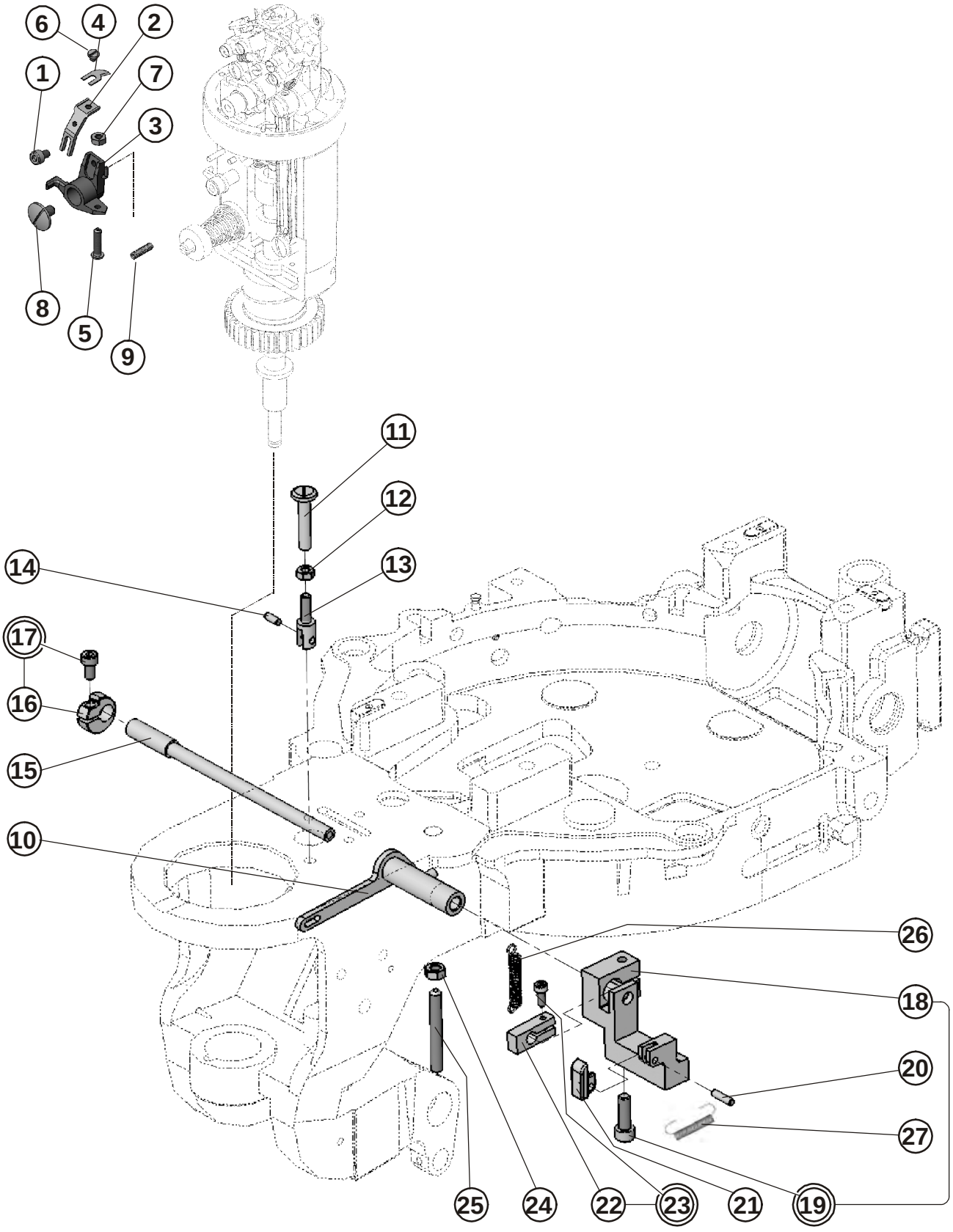

# UPPER THREAD TRIMMER AND THREAD GUIDE

| DET | PART NUMBER | DESCRIPTION | QTY. |
|---|---|---|---|
| 01 | 08.6000.3.005 | SCREW M3-5 | 1 |
| 02 | 11.1198.0.000 | KNIFE HOLDER | 1 |
| 03 | 11.4202.0.000 | LEVER | 1 |
| 04 | 14.1197.1.000 | KNIFE TRIMMER | 1 |
| 05 | 17.0013.6.081 | SCREW | 1 |
| 06 | 17.0012.0.688 | SCREW M2,5-3,5 | 1 |
| 07 | 08.6700.3.000 | NUT M3 | 1 |
| 08 | 17.0012.4.042 | SCREW M4 | 1 |
| 09 | 01.5041.0.000 | SPRING - EXTENSION | 1 |
| 10 | 11.3085.0.000 | TRIMMING LEVER - ASSEMBLY | 1 |
| 11 | 11.3206.0.000 | ACTUATOR | 1 |
| 12 | 08.6700.4.000 | NUT M4 | 1 |
| 13 | 11.3205.0.000 | CLAVIS | 1 |
| 14 | 12.1010.0.308 | PIN 3-8 | 1 |
| 15 | 11.5019.0.000 | SHAFT | 1 |
| 16 | 18.0043.6.284 | COLLAR | 1 |
| 17 | 08.6000.4.008 | SCREW M4-8 | (1) |
| 18 | 11.3087.0.000 | HOLDER | 1 |
| 19 | 08.6000.5.016 | SCREW M5-16 | (1) |
| 20 | 12.1010.0.312 | PIN 3-12 | 1 |
| 21 | 10.3089.2.000 | LATCH | 1 |
| 22 | 11.3088.0.000 | CLAMP | 1 |
| 23 | 08.6000.3.008 | SCREW M3-8 | (1) |
| 24 | 08.6400.5.040 | SCREW M5-40 | 1 |
| 25 | 08.6700.5.000 | NUT M5 | 1 |
| 26 | 01.5134.0.000 | SPRING - EXTENSION | 1 |
| 27 | 01.5433.0.000 | SPRING - EXTENSION | 1 |

# BUTTONHOLE SHAPE CHANGE

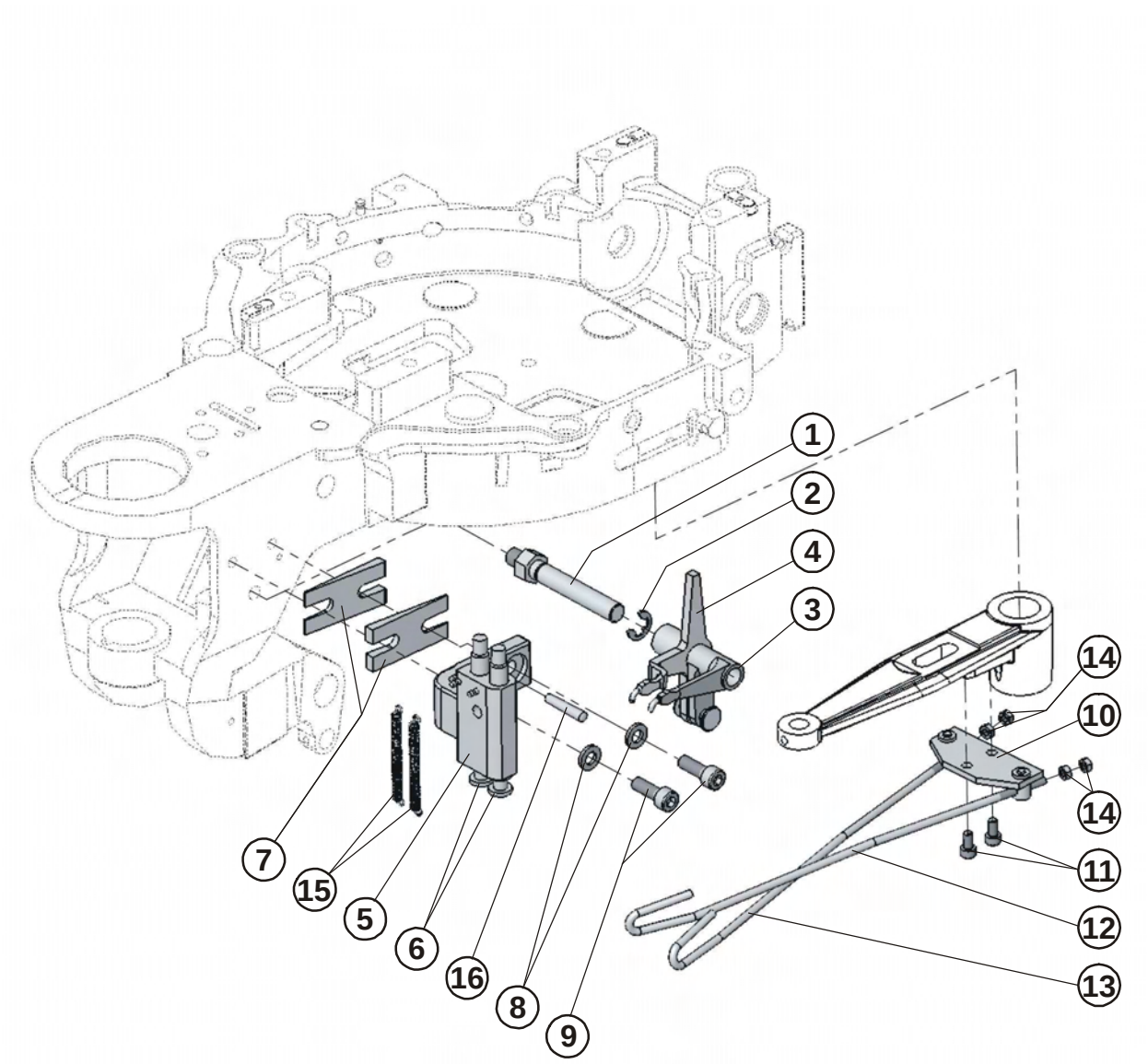

# BUTTONHOLE SHAPE CHANGE

| DET | PART NUMBER | DESCRIPTION | QTY. |
|---|---|---|---|
| 01 | 11.3255.0.000 | SHOULDER STUD | 1 |
| 02 | 17.0027.4.085 | LOCK RING 7 | 1 |
| 03 | 11.3254.0.000 | ACTUATOR R.H. | 1 |
| 04 | 11.3253.0.000 | ACTUATOR L.H. | 1 |
| 05 | 11.3251.0.000 | BRACKET | 1 |
| 06 | 11.3252.0.000 | PIN | 2 |
| 07 | 10.3250.1.000 | SPACER | 2 |
| 08 | 08.6850.6.000 | WASHER 6,4 | 2 |
| 09 | 08.6000.6.018 | SCREW M6-18 | 2 |
| 10 | 10.3258.0.000 | BRACKET - ASSEMBLY OF WIRE | 1 |
| 11 | 08.6000.4.008 | SCREW M4-8 | 2 |
| 12 | 11.3259.0.001 | WIRE ROD - RIGHT | 1 |
| 13 | 11.3259.0.002 | WIRE ROD - LEFT | 1 |
| 14 | 08.6707.1.000 | NUT M3,5 | 4 |
| 15 | 01.5054.0.000 | SPRING - EXTENSION | 2 |
| 16 | 12.1011.0.425 | PIN 4-25 | 1 |

# TURNING ASSEMBLY

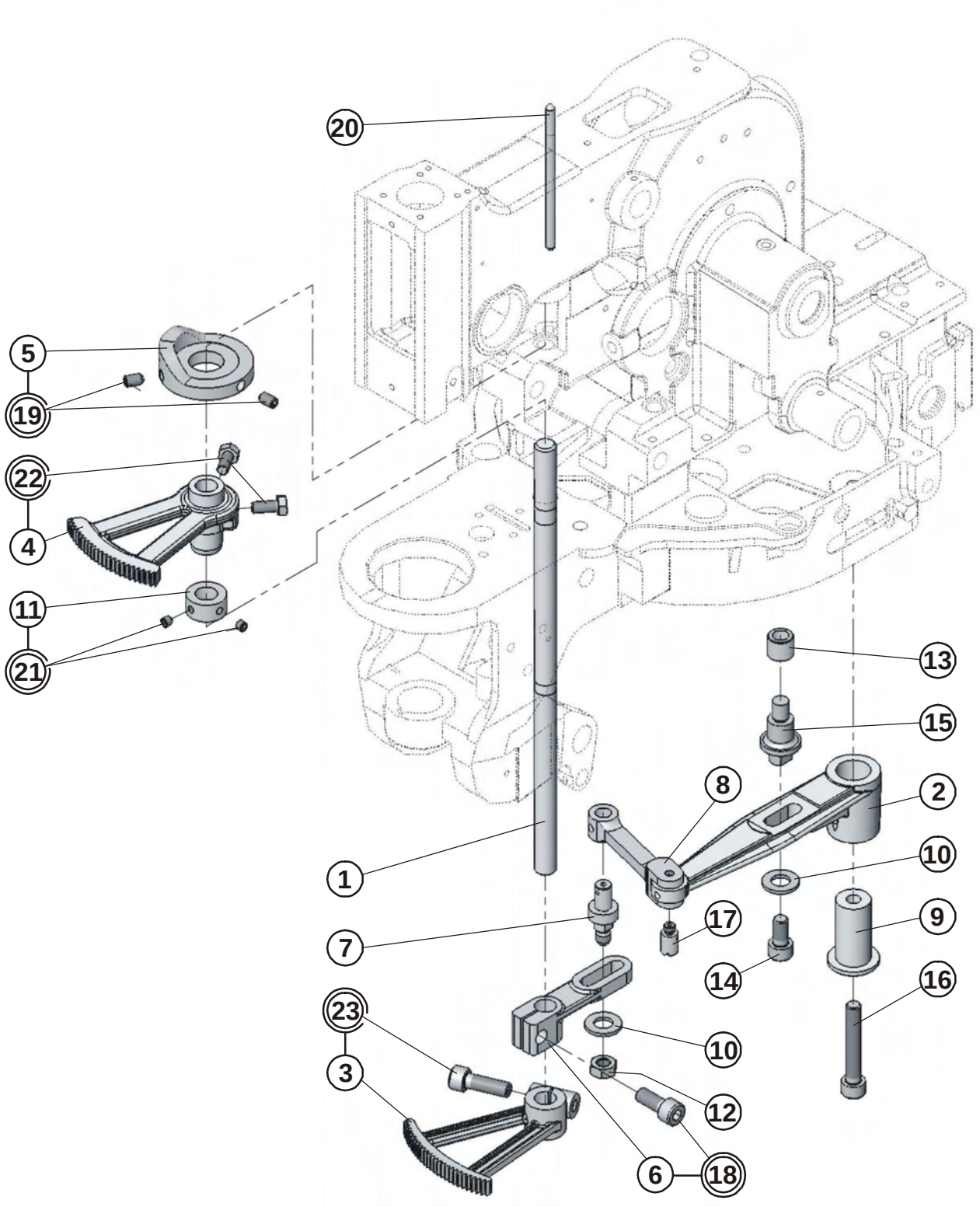

# TURNING ASSEMBLY

| DET | PART NUMBER | DESCRIPTION | QTY. |
|---|---|---|---|
| 01 | 11.3009.0.000 | SECTOR SHAFT | 1 |
| 02 | 11.3015.0.000 | LEVER SECTOR | 1 |
| 03 | 17.0055.3.025 | GEAR SECTOR - UNDER | 1 |
| 04 | 11.1075.0.000 | GEAR SECTOR - UPPER | 1 |
| 05 | 11.1160.0.000 | CAM | 1 |
| 06 | 17.0063.6.308 | LEVER REVERSE | 1 |
| 07 | 17.0033.3.132 | PLUG | 1 |
| 08 | 17.0063.6.044 | FORK | 1 |
| 09 | 11.3016.0.000 | BUSHING | 1 |
| 10 | 08.6850.8.000 | WASHER 8 | 2 |
| 11 | 17.0043.6.018 | COLLAR RING | 1 |
| 12 | 08.6700.8.000 | NUT M8 | 1 |
| 13 | 17.0041.8.181 | ROLL 14J5/9H5-12 | 1 |
| 14 | 08.6000.8.016 | SCREW M8-16 | 1 |
| 15 | 11.3017.0.000 | STUD | 1 |
| 16 | 08.6000.8.050 | SCREW M8-50 | 1 |
| 17 | 17.0033.1.153 | SCREW | 1 |
| 18 | 08.6000.8.020 | SCREW M8-20 | (1) |
| 19 | 08.6400.6.010 | SCREW M6-10 | (2) |
| 20 | 01.6334.0.000 | ROD | 1 |
| 21 | 08.6400.5.305 | SCREW M5x0,5-5 | (2) |
| 22 | 17.0014.1.133 | SCREW M6-14 | (2) |
| 23 | 08.6000.8.025 | SCREW M8-25 | (1) |

# CUTTING LEVER ASSEMBLY

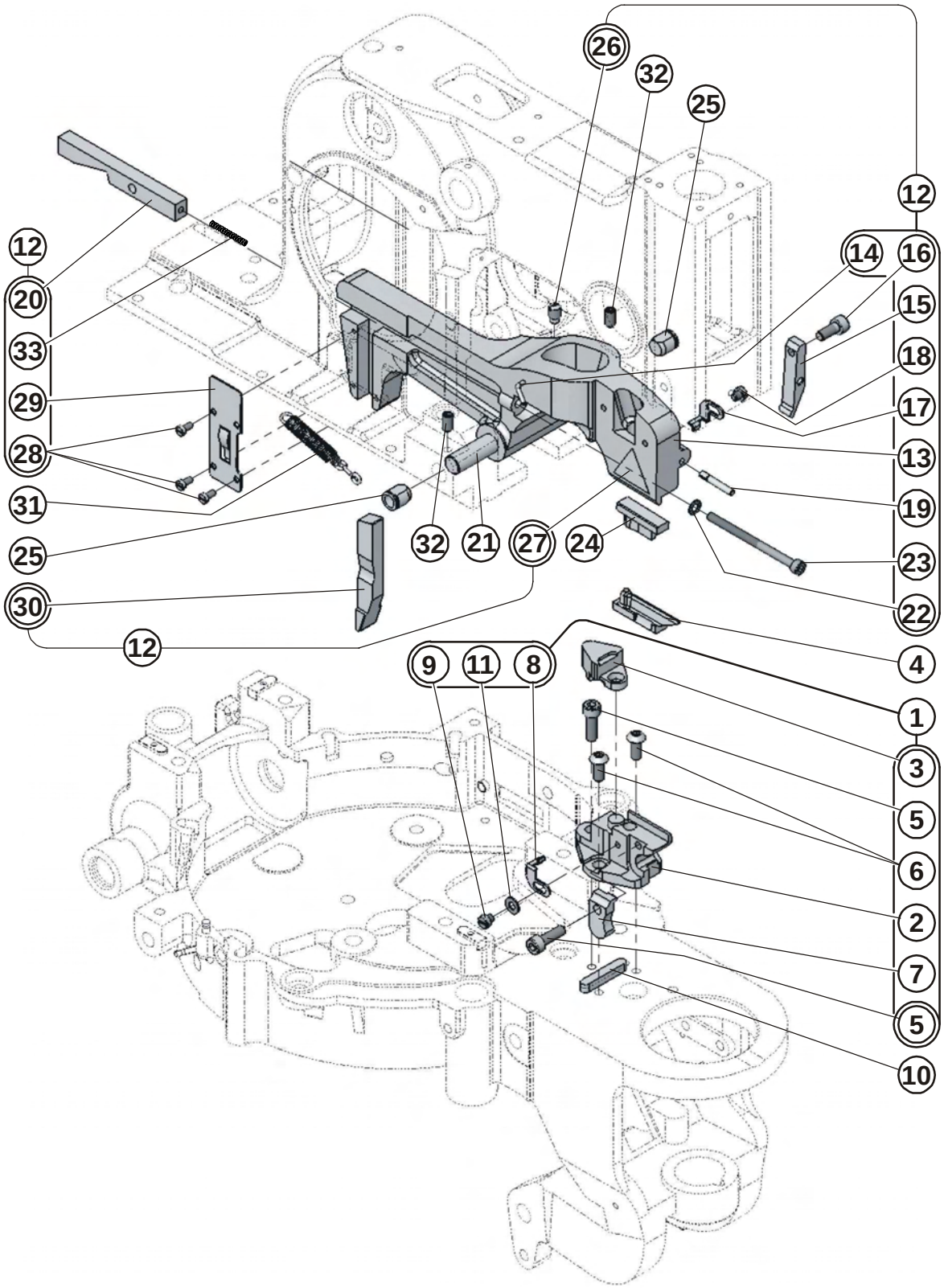

# CUTTING LEVER ASSEMBLY

| DET | PART NUMBER | DESCRIPTION | QTY. |
|---|---|---|---|
| 01 | 11.3070.0.050 | KNIFE HOLDER - ASSEMBLY | 1 |
| 02 | 11.3070.0.000 | KNIFE HOLDER | (1) |
| 03 | 11.3067.0.000 | WEDGE-SPREADER | (1) |
| 04 | 11.0087.0.432 | KNIFE 28x42-38 | 1 |
| 04 | 11.0087.0.434 | KNIFE 34x42-38 | 1 |
| 05 | 08.6000.5.016 | SCREW M5-16 | (2) |
| 06 | 08.6200.5.012 | SCREW M5-12 | (6) |
| 07 | 17.0064.6.416 | KNIFE CLAMP | (1) |
| 08 | 17.0082.5.997 | CLAMP | (1) |
| 09 | 17.0012.0.571 | SCREW | (1) |
| 10 | 17.0021.1.073 | KEY | 1 |
| 11 | 08.6850.4.000 | WASHER M4 | (1) |
| 12 | 11.1068.0.050 | CUTTING LEVER - ASSEMBLY | 1 |
| 13 | 11.1068.0.000 | CUTTING LEVER | (1) |
| 14 | 17.0031.0.405 | PIN 2-20 | (1) |
| 15 | 17.0063.6.220 | KNIFE HOLDER | (1) |
| 16 | 08.6000.5.012 | SCREW M5-12 | (1) |
| 17 | 17.0082.5.997 | CLAMP | (1) |
| 18 | 17.0012.0.571 | SCREW | (1) |
| 19 | 01.6837.0.000 | PIN-GROOVED | (1) |
| 20 | 11.1072.0.000 | PRESSURE BAR | (1) |
| 21 | 11.1074.0.000 | SHAFT | 1 |
| 22 | 08.6832.4.000 | WASHER M4 | (1) |
| 23 | 08.6000.4.060 | SCREW M4-60 | (1) |
| 24 | 11.0064.5.850 | CUTTING STEEL 18 L | 1 |
| 25 | 14.1025.3.000 | BUTTON UNI | 2 |
| 26 | 17.0011.2.063 | SCREW M6x0,75-10 | (1) |
| 27 | 12.8000.0.409 | LABEL ●●● | (1) |
| 28 | 08.6010.3.006 | SCREW M3-6 | (3) |
| 29 | 17.0082.5.108 | COVER PLATE | (1) |
| 30 | 11.1071.0.000 | CAM FOLLOWER PIN | (1) |
| 31 | 01.5006.0.001 | SPRING - ASSEMBLY | 1 |
| 32 | 08.6400.5.008 | SCREW M5-8 | 2 |
| 33 | 17.0026.1.082 | SPRING - COMPRESSION | (1) |

# TABLE SIDE MOVEMENT

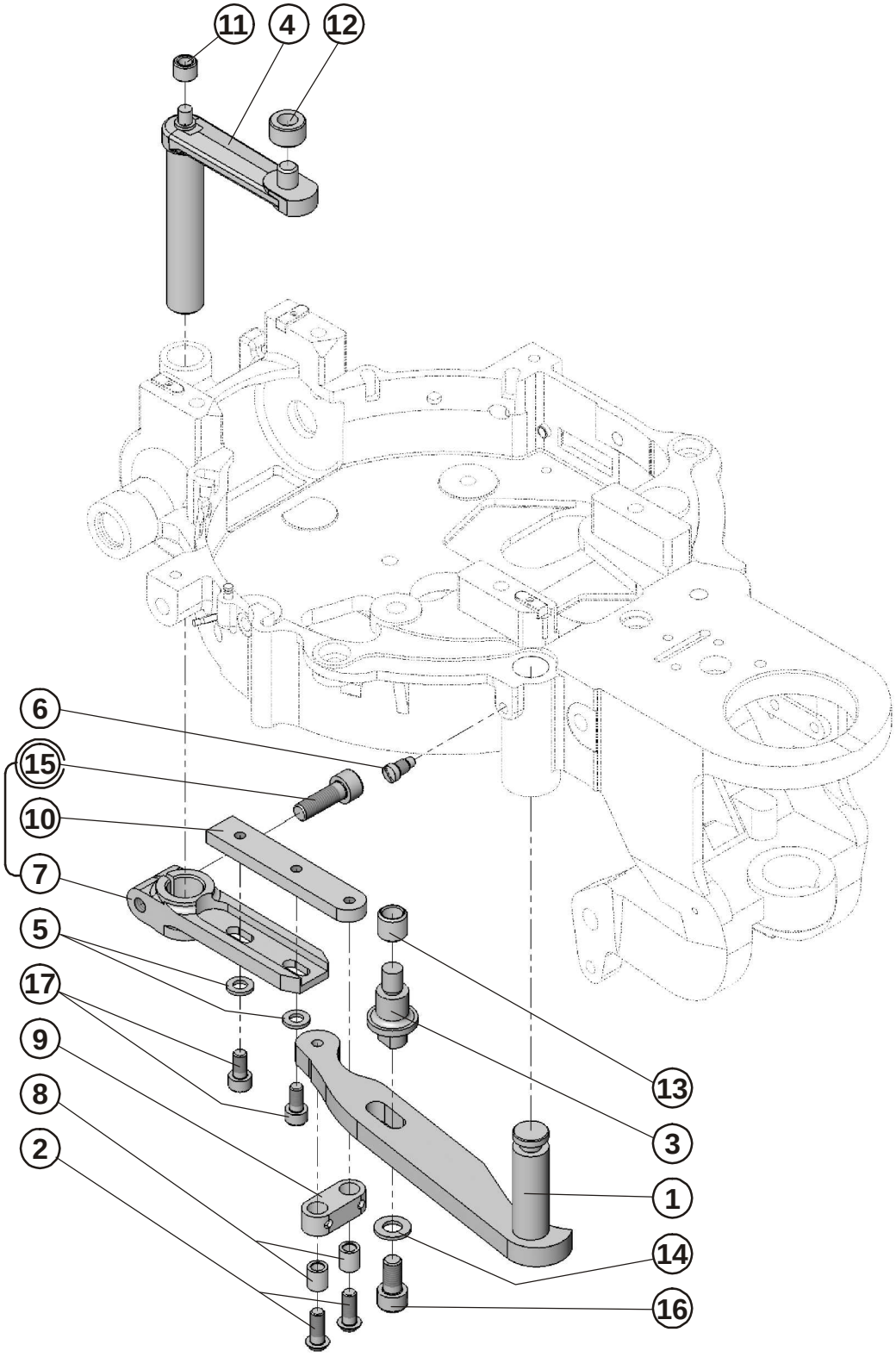

# TABLE SIDE MOVEMENT

| DET | PART NUMBER | DESCRIPTION | QTY. |
|---|---|---|---|
| 01 | 11.3303.0.000 | LEVER | 1 |
| 02 | 08.6200.6.016 | SCREW M6-16 | 2 |
| 03 | 11.3017.0.000 | STUD | 1 |
| 04 | 11.3034.0.000 | LEVER | 1 |
| 05 | 08.6850.6.000 | WASHER 6,4 | 2 |
| 06 | 17.0013.2.090 | SCREW M6x0,75-7,5 | 1 |
| 07 | 11.3019.0.000 | LOWER LEVER | 1 |
| 08 | 11.3301.0.000 | BUSHING | 2 |
| 09 | 11.3302.0.000 | LINK | 1 |
| 10 | 11.3300.0.000 | LOWER EXTENSION | 1 |
| 11 | 11.3021.0.002 | ROLL | 1 |
| 12 | 11.3021.0.003 | ROLL | 1 |
| 13 | 11.3021.0.001 | ROLL | 1 |
| 14 | 08.6850.8.000 | WASHER 8 | 1 |
| 15 | 08.6000.8.025 | SCREW M8-25 | (1) |
| 16 | 08.6000.8.016 | SCREW M8-16 | 1 |
| 17 | 08.6000.6.012 | SCREW M6-12 | 2 |

# SEWING OPERATION, FLY BAR

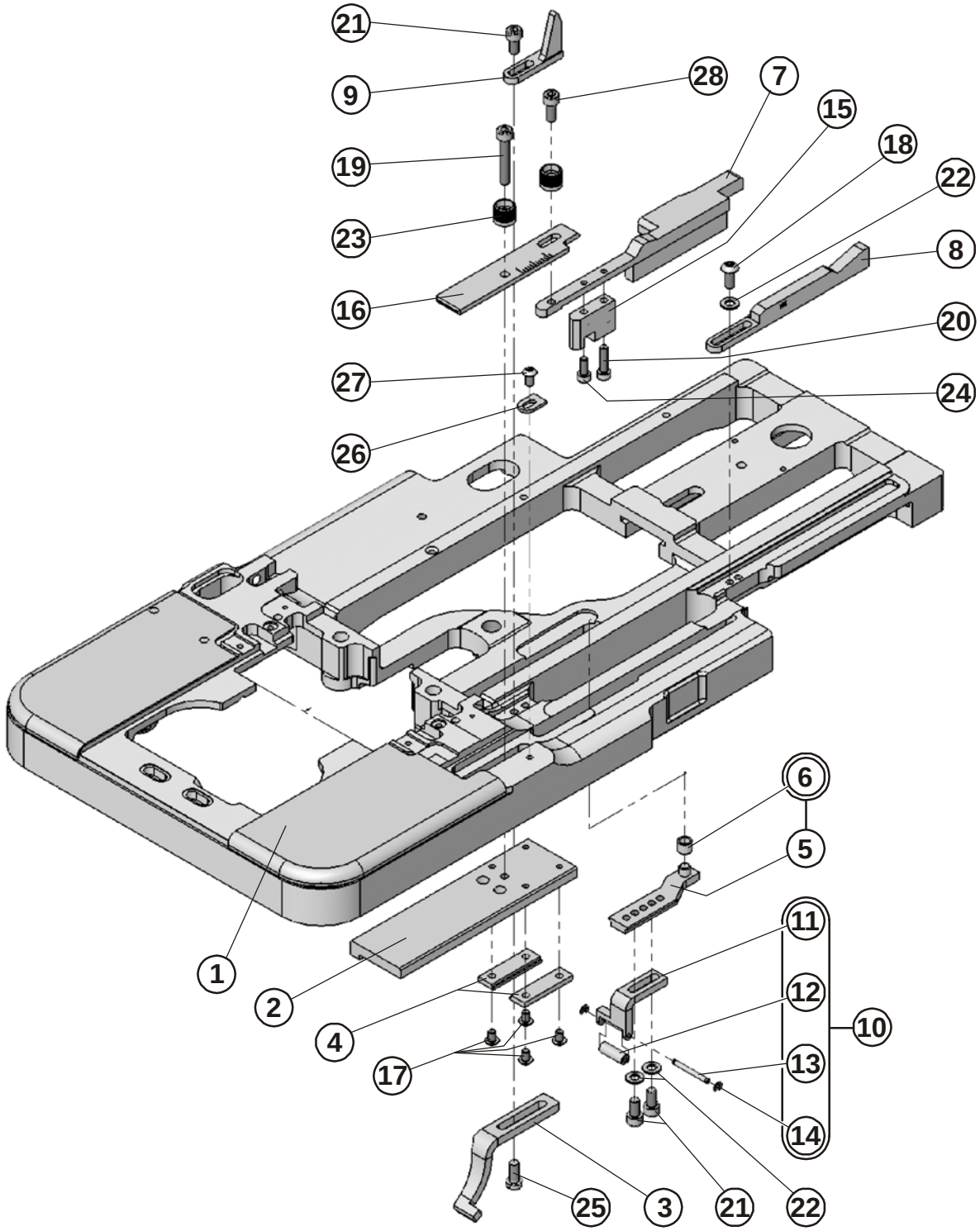

# SEWING OPERATION, FLY BAR

| DET | PART NUMBER | DESCRIPTION | QTY. |
|---|---|---|---|
| 01 | 11.2001.0.000 | BEDPLATE MILLING ● | 1 |
| 02 | 11.2255.0.000 | PLATE - CAM FLY BAR | 1 |
| 03 | 11.2256.0.000 | BRACKET | 1 |
| 04 | 10.2264.0.000 | GUIDE PLATE | 2 |
| 05 | 11.2263.0.000 | LINK | 1 |
| 06 | 11.2263.0.901 | ROLL ●●● | (1) |
| 07 | 11.2018.0.000 | LENGTH GUIDE | 1 |
| 08 | 11.2061.0.000 | WEDGE STITCH INCREASE | 1 |
| 09 | 11.2016.0.000 | BUMPER | 1 |
| 10 | 11.2069.0.050 | TRIP BRACKET - ASSEMBLY | 1 |
| 11 | 11.2069.0.000 | TRIP BRACKET | (1) |
| 12 | 11.2069.0.902 | TRIP ROLLER | (1) |
| 13 | 11.2069.0.901 | PIN-PIVOT | (1) |
| 14 | 01.6280.0.000 | RETAINING RING | (2) |
| 15 | 11.2262.0.000 | BLOCK | 1 |
| 16 | 11.2251.0.000 | LENGTH PLATE | 1 |
| 17 | 08.6200.4.006 | SCREW M4-6 | 4 |
| 18 | 08.6200.5.012 | SCREW M5-12 | 1 |
| 19 | 08.6000.5.030 | SCREW M5-30 | 1 |
| 20 | 08.6000.4.016 | SCREW M4-16 | 1 |
| 21 | 08.6000.5.010 | SCREW M5-10 | 3 |
| 22 | 08.6850.5.000 | WASHER 5,3 | 3 |
| 23 | 11.2254.0.000 | BUTTON | 2 |
| 24 | 08.6000.4.010 | SCREW M4-10 | 1 |
| 25 | 08.6010.5.012 | SCREW M5-12 | 1 |
| 26 | 17.0081.5.047 | STOP | 1 |
| 27 | 08.6200.4.008 | SCREW M4-8 | 1 |
| 28 | 08.6000.5.012 | SCREW M5-12 | 1 |

# STARTING LEVER

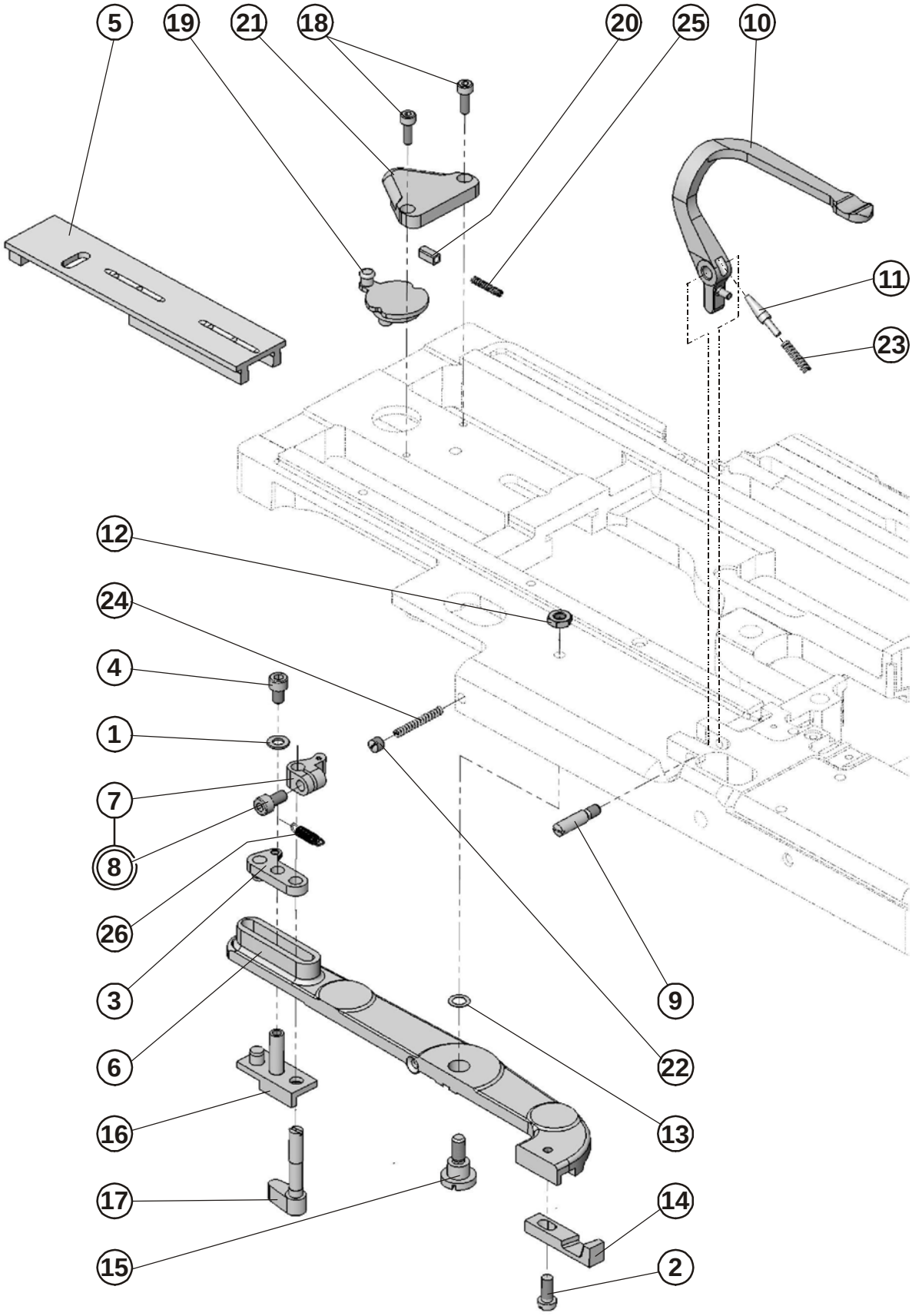

# STARTING LEVER

| DET | PART NUMBER | DESCRIPTION | QTY. |
|---|---|---|---|
| 01 | 08.6850.5.000 | WASHER 5,3 | 1 |
| 02 | 08.6010.5.012 | SCREW M5-12 | 1 |
| 03 | 10.2072.0.000 | MAKE ASSEMBLY PLATE | 1 |
| 04 | 08.6000.5.008 | SCREW M5-8 | 1 |
| 05 | 10.2260.0.001 | PLATE-GUIDE | 1 |
| 06 | 11.2012.0.000 | SWITCH LEVER | 1 |
| 07 | 11.2073.0.000 | LATCH | 1 |
| 08 | 08.6000.5.010 | SCREW M5-10 | (1) |
| 09 | 17.0033.1.010 | PLUG | 1 |
| 10 | 11.2013.0.000 | STARTING LEVER | 1 |
| 11 | 10.2015.0.000 | PLUNGER | 1 |
| 12 | 17.0016.1.141 | NUT M6 LOW | 1 |
| 13 | 11.2090.0.000 | WASHER | 1 |
| 14 | 17.0062.5.015 | TRIP | 1 |
| 15 | 17.0033.2.030 | SCREW | 1 |
| 16 | 11.2070.0.000 | BLOCK - ASSEMBLY OF | 1 |
| 17 | 10.2071.0.000 | LEVER | 1 |
| 18 | 08.6000.4.012 | SCREW M4-12 | 2 |
| 19 | 10.2257.0.000 | SHIFTER | 1 |
| 20 | 10.2259.0.000 | PLUNGER | 1 |
| 21 | 10.2258.0.000 | COVER | 1 |
| 22 | 17.0011.1.148 | SET - SCREW | 1 |
| 23 | 01.5020.0.000 | SPRING - COMPRESSION | 1 |
| 24 | 01.5019.0.000 | SPRING - COMPRESSION | 1 |
| 25 | 01.5003.0.000 | SPRING - COMPRESSION | 1 |
| 26 | 01.5473.0.000 | SPRING - EXTENSION | 1 |

# CLAMP YOKE, SHIFTING LEVER

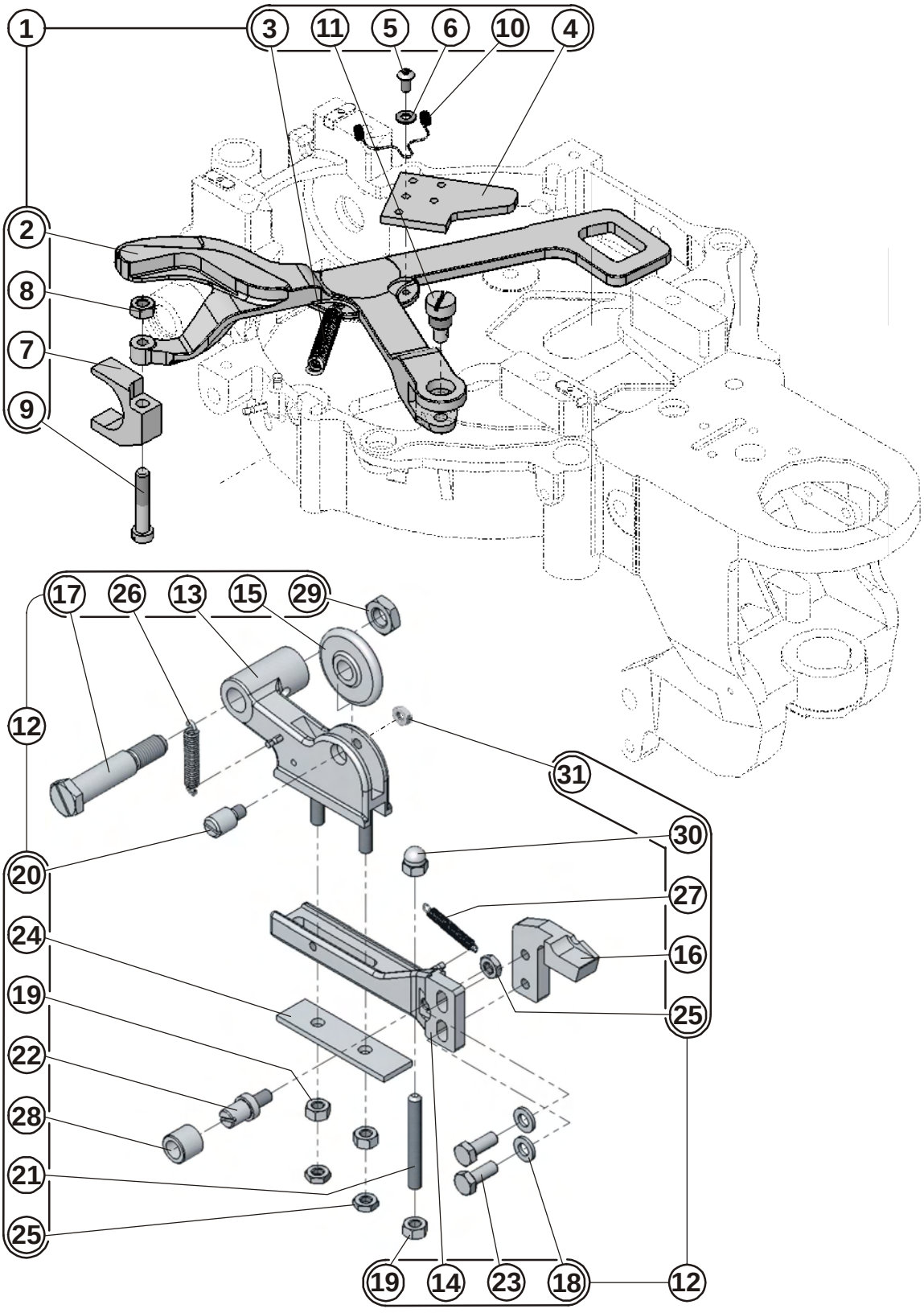

# CLAMP YOKE, SHIFTING LEVER

| DET | PART NUMBER | DESCRIPTION | QTY. |
|---|---|---|---|
| 01 | 11.3029.0.050 | SHIFTING LEVER - ASSEMBLY | 1 |
| 02 | 11.3029.0.000 | SHIFTING LEVER | (1) |
| 03 | 01.5055.0.000 | SPRING - EXTENSION | (1) |
| 04 | 17.0094.5.309 | FELT ●●● | (1) |
| 05 | 08.6200.4.008 | SCREW M4-8 | (1) |
| 06 | 08.6850.4.000 | WASHER M4 | (1) |
| 07 | 17.0062.5.144 | SHIFTER SHOE | (1) |
| 08 | 08.6700.6.000 | NUT M6 | (1) |
| 09 | 17.0012.1.148 | SCREW M6-32 | (1) |
| 10 | 17.0027.1.799 | SPRING | (1) |
| 11 | 17.0033.3.134 | SCREW | (1) |
| 12 | 11.3022.0.050 | LEVER ASSEMBLY | 1 |
| 13 | 11.3023.1.000 | LEVER | (1) |
| 14 | 11.3022.1.000 | LEVER CLAMPING | (1) |
| 15 | 11.3025.0.000 | ROLL | (1) |
| 16 | 11.3131.0.000 | LEVER CLAMPING TIP | (1) |
| 17 | 17.0014.3.011 | SCREW | (1) |
| 18 | 08.6850.6.000 | WASHER 6,4 | (2) |
| 19 | 08.6700.6.000 | NUT M6 | (3) |
| 20 | 17.0033.1.011 | PLUG | (1) |
| 21 | 08.6400.6.050 | SCREW M6-50 | (1) |
| 22 | 11.3032.0.000 | STUD | (1) |
| 23 | 08.6310.6.016 | SCREW M6-16 | (2) |
| 24 | 11.3024.0.000 | SLIDE | (1) |
| 25 | 08.6710.6.000 | NUT M6 | (3) |
| 26 | 01.5015.0.000 | SPRING | (1) |
| 27 | 01.5602.0.000 | SPRING | (1) |
| 28 | 17.0041.8.181 | ROLL | (1) |
| 29 | 08.6710.0.300 | NUT M10 | (1) |
| 30 | 05.0144.0.000 | CAP ●●● | (1) |
| 31 | 08.6710.6.300 | NUT M6x0,75 | (1) |

# SPREADING

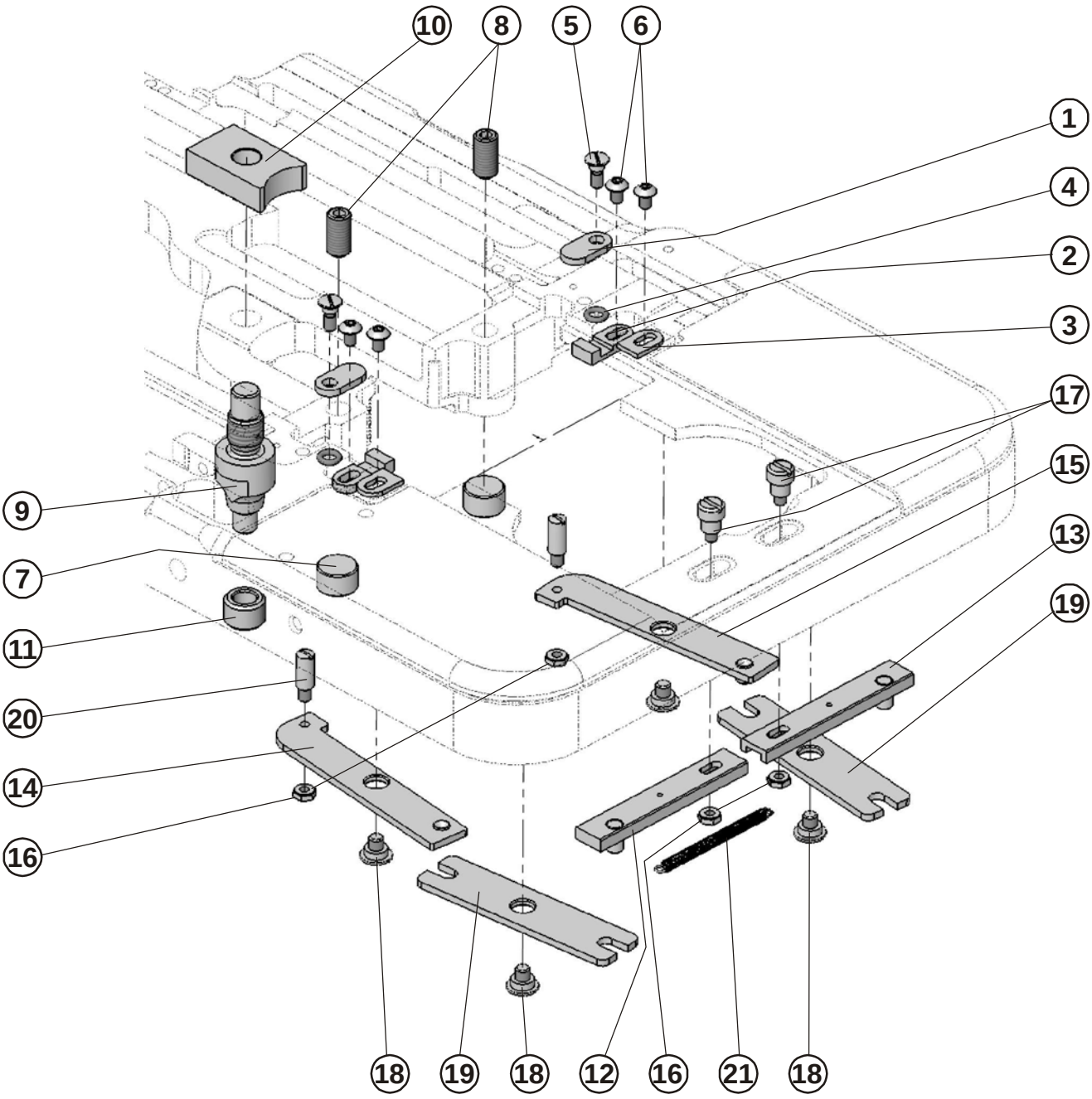

# SPREADING

| DET | PART NUMBER | DESCRIPTION | QTY. |
|---|---|---|---|
| 01 | 11.2009.0.000 | LATCH | 2 |
| 02 | 10.2031.0.000 | SLIDE - ADJUSTABLE | 2 |
| 03 | 11.2008.0.000 | STOP | 2 |
| 04 | 01.4426.0.000 | O - RING | 2 |
| 05 | 11.2051.0.000 | SCREW | 2 |
| 06 | 08.6200.4.006 | SCREW M4-6 | 4 |
| 07 | 11.3005.0.000 | BUTTON | 2 |
| 08 | 08.6400.8.416 | SCREW M8x1-16 | 2 |
| 09 | 11.2006.0.000 | STUD BEDPLATE | 1 |
| 10 | 10.3033.0.017 | BLOCK | 1 |
| 11 | 17.0041.8.067 | ROLL | 1 |
| 12 | 11.2033.0.000 | SLIDE CLAMP - LH | 1 |
| 13 | 11.2034.0.000 | SLIDE CLAMP - RH | 1 |
| 14 | 11.2039.0.000 | LINK REAR L.H. | 1 |
| 15 | 11.2040.0.000 | LINK REAR R.H. | 1 |
| 16 | 19.0016.1.402 | NUT | 4 |
| 17 | 11.2037.0.000 | STUD | 2 |
| 18 | 17.0013.1.045 | SCREW | 4 |
| 19 | 17.0082.2.054 | LEVER | 2 |
| 20 | 17.0013.5.069 | SCREW | 2 |
| 21 | 01.5023.0.000 | SPRING - EXTENSION | 1 |

# CLAMPING MECHANISM

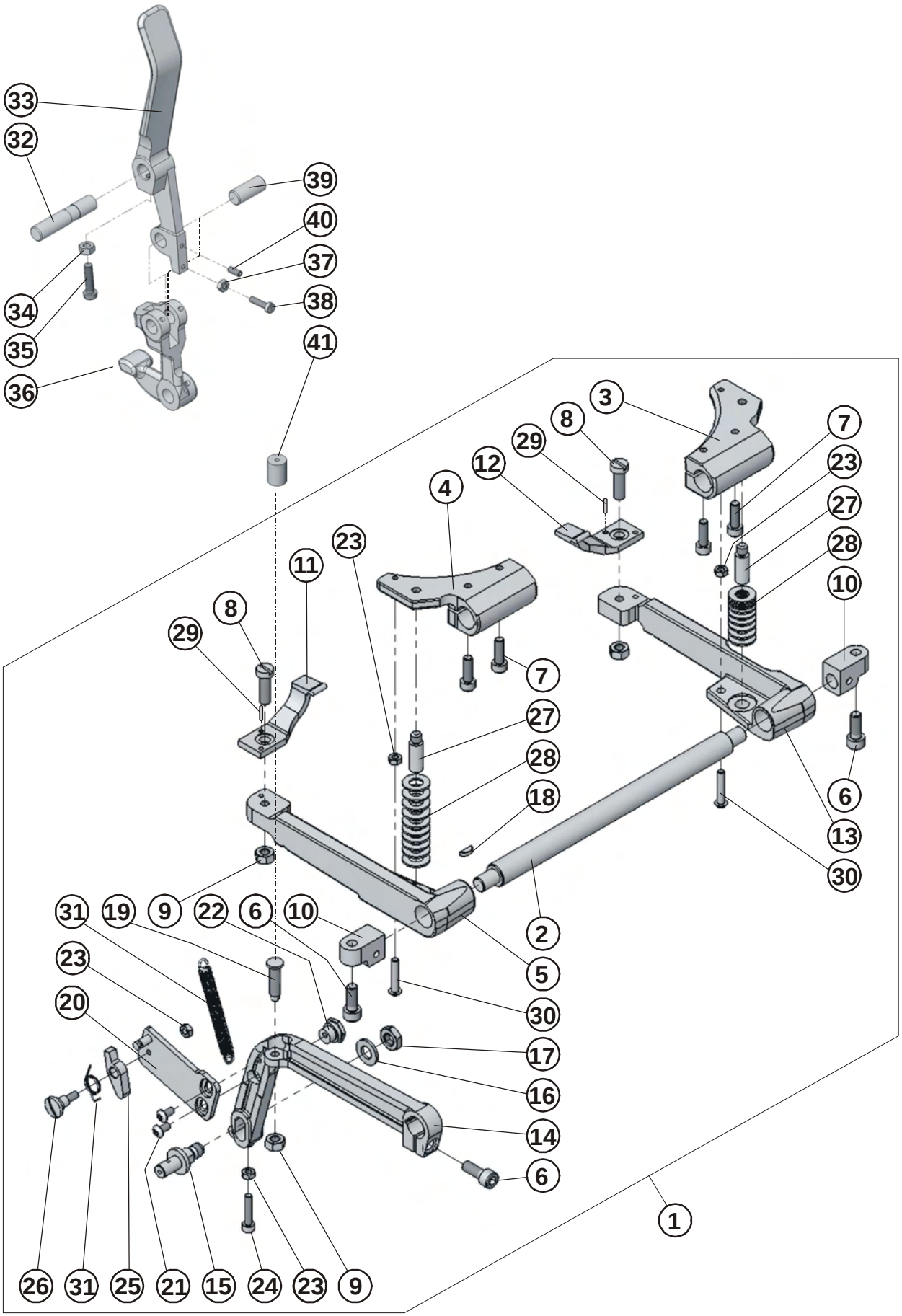

# CLAMPING MECHANISM

| DET | PART NUMBER | DESCRIPTION | QTY. |
|---|---|---|---|
| 01 | 11.2026.0.050 | COMPENSATING CLAMP | 1 |
| 02 | 17.0034.2.324 | SHAFT | (1) |
| 03 | 11.2026.0.002 | CLAMP ARM TOGGLE,R.H. | (1) |
| 04 | 11.2026.0.003 | CLAMP ARM TOGGLE,L.H. | (1) |
| 05 | 11.2026.0.005 | CLAMP YOKE LH | (1) |
| 06 | 08.6000.6.016 | SCREW M6-16 | (3) |
| 07 | 08.6000.5.016 | SCREW M5-16 | (4) |
| 08 | 17.0012.0.254 | SCREW | (2) |
| 09 | 08.6700.6.000 | NUT M6 | (3) |
| 10 | 11.2025.0.000 | BEARING | (2) |
| 11 | 11.2028.0.000 | L.H. PULL DOWN | (1) |
| 12 | 11.2027.0.000 | R.H. PULL DOWN | (1) |
| 13 | 11.2026.0.006 | CLAMP YOKE RH | (1) |
| 14 | 11.2023.0.000 | CLOSING LEVER | (1) |
| 15 | 17.0033.3.133 | STUD | (1) |
| 16 | 08.6850.8.000 | WASHER 8 | (1) |
| 17 | 08.6710.8.000 | NUT M8 | (1) |
| 18 | 17.0021.1.050 | KEY 2,5x3,7 | (1) |
| 19 | 11.2086.0.000 | ADJUSTABLE SCREW | (1) |
| 20 | 11.2074.0.000 | BRECKET | (1) |
| 21 | 08.6200.4.008 | SCREW M4-8 | (2) |
| 22 | 11.2088.0.000 | ECCENTRIC NUT | (1) |
| 23 | 08.6700.4.000 | NUT M4 | (4) |
| 24 | 08.6000.4.020 | SCREW M4-20 | (1) |
| 25 | 10.2075.0.000 | LATCH | (1) |
| 26 | 11.2089.0.000 | SCREW-SHOULDER | (1) |
| 27 | 11.2024.0.000 | PIN | (2) |
| 28 | 01.4121.0.000 | WASHER | (20) |
| 29 | 12.1014.0.308 | PIN 3-8 | (2) |
| 30 | 11.2087.0.000 | SCREW M4-22 | (2) |
| 31 | 01.5475.0.000 | SPRING - EXTENSION | (1) |
| 32 | 17.0033.5.052 | PLUG | 1 |
| 33 | 17.0061.5.027 | LEVER | 1 |
| 34 | 08.6700.4.000 | NUT M4 | 1 |
| 35 | 08.6010.4.016 | SCREW M4-16 | 1 |
| 36 | 11.2021.0.000 | LEVER - TOGGLE | 1 |
| 37 | 08.6700.3.000 | NUT M3 | 1 |
| 38 | 08.6010.3.012 | SCREW M3-12 | 1 |
| 39 | 17.0031.4.030 | STUD | 1 |
| 40 | 08.6400.3.010 | SCREW M3-10 | 1 |
| 41 | 13.2087.1.000 | BUMPER | 1 |
| 42 | 08.6700.6.300 | NUT M6x0,75 ●●● | (2) |

# CLAMP PLATE ASSEMBLY

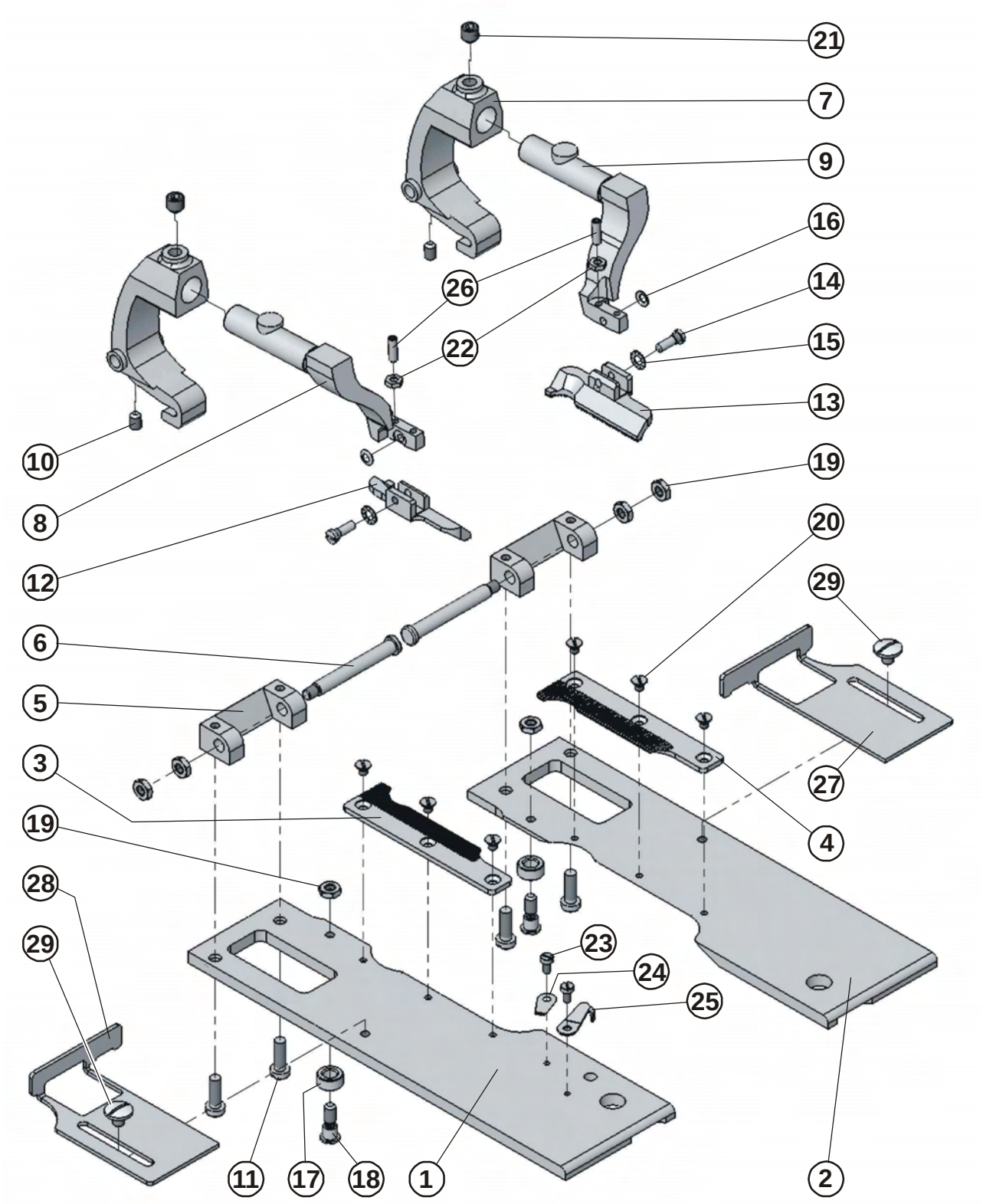

# CLAMP PLATE ASSEMBLY

| DET | PART NUMBER | DESCRIPTION | QTY. |
|---|---|---|---|
| 01 | 11.2047.0.000 | PLATE-CLAMP, L.H. | 1 |
| 02 | 11.2043.0.000 | PLATE-CLAMP, R.H. | 1 |
| 03 | 11.2048.0.000 | MAT CLAMP LH - 32 | 1 |
| 04 | 11.2044.0.000 | MAT CLAMP RH - 32 | 1 |
| 05 | 11.2005.0.000 | BLOCK | 2 |
| 06 | 19.0032.8.401 | SHAFT | 2 |
| 07 | 11.2002.0.000 | BASE CLAMP ARM | 2 |
| 08 | 11.2004.0.000 | ARM CLAMP L.H. SMALL | 1 |
| 09 | 11.2003.0.000 | ARM CLAMP R.H. SMALL | 1 |
| 10 | 08.6400.4.006 | SCREW M4-6 | 2 |
| 11 | 08.6010.4.012 | SCREW M4-12 | 4 |
| 12 | 19.0066.7.421 | CLAMP FOOT LEFT | 1 |
| 13 | 19.0066.7.420 | CLAMP FOOT RIGHT | 1 |
| 14 | 17.0013.5.067 | SCREW | 2 |
| 15 | 17.0019.5.040 | WASHER | 2 |
| 16 | 17.0019.2.066 | WASHER | 2 |
| 17 | 17.0041.8.005 | ROLL | 2 |
| 18 | 17.0013.1.047 | SCREW | 2 |
| 19 | 08.6710.4.000 | NUT M4 | 6 |
| 20 | 08.6112.3.004 | SCREW M3x4 | 6 |
| 21 | 08.6400.6.006 | SCREW M6-6 | 2 |
| 22 | 08.6710.3.000 | NUT M3 | 2 |
| 23 | 17.0012.0.303 | SCREW M2,5-5 | 2 |
| 24 | 17.0082.5.884 | CLIPS | 1 |
| 25 | 17.0087.0.169 | KNIFE | 1 |
| 26 | 08.6400.3.010 | SCREW M3-10 | 2 |
| 27 | 14.2059.0.000 | CLOTH GAUGE R.H. | 1 |
| 28 | 14.2060.0.000 | CLOTH GAUGE L.H. | 1 |
| 29 | 17.0012.4.106 | SCREW M4 | 2 |

# COVERS

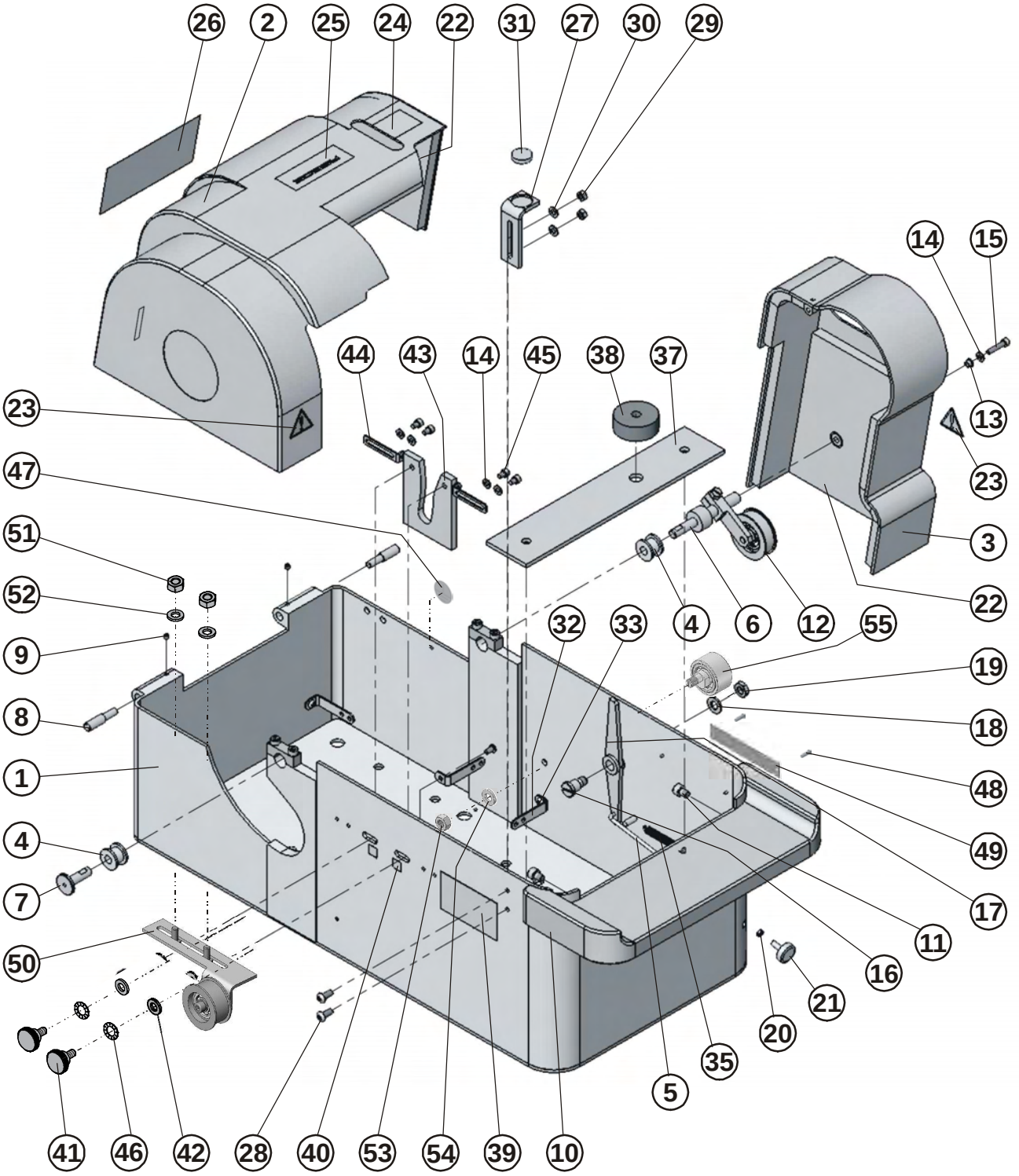
26
2
25
24
22
31
27
30
29
14
15
44
43
14
45
38
37
23
13
47
23
51
3
52
22
32
33
4
6
12
55
9
19
8
18
1
48
4
49
7
17
50
11
16
21
20
35
5
41
46
42
28
40
53
54
39
10

# COVERS

| DET | PART NUMBER | DESCRIPTION | QTY. |
|---|---|---|---|
| 01 | 11.5001.1.000 | CASE, S105 | 1 |
| 02 | 11.5021.0.000 | COVER HIND | 1 |
| 03 | 11.5022.0.000 | COVER RIGHT | 1 |
| 04 | 11.5004.0.000 | BUSHING | 2 |
| 05 | 11.5003.0.000 | ROD | 1 |
| 06 | 17.0033.2.133 | BUSHING PIN | 1 |
| 07 | 17.0032.0.193 | SHAFT | 1 |
| 08 | 19.0031.3.405 | PIN | 2 |
| 09 | 08.6400.4.005 | SCREW M4-5 | 2 |
| 10 | 11.5005.0.000 | CASE COVER CE | 1 |
| 11 | 08.6000.6.008 | SCREW M6-8 | 2 |
| 12 | 17.0004.3.485 | ROLLER COMPLETE - ASSEMBLY | 1 |
| 13 | 19.0095.1.408 | RING | 1 |
| 14 | 08.6850.4.000 | WASHER M4 | 5 |
| 15 | 08.6000.4.020 | SCREW M4-20 | 1 |
| 16 | 17.0013.1.171 | SCREW M8-22 | 1 |
| 17 | 19.0063.3.403 | SUPPORT | 1 |
| 18 | 08.6850.8.000 | WASHER 8 | 1 |
| 19 | 08.6712.8.000 | NUT M8 | 1 |
| 20 | 08.6700.3.000 | NUT M3 | 1 |
| 21 | 19.0017.2.402 | BUTTON ● | 1 |
| 22 | 11.5031.0.000 | PAN ACOUSTIC ●●● | 1 |
| 23 | 17.0097.5.174 | LABEL- WARNING | 2 |
| 24 | 05.9000.0.102 | STICKER | 1 |
| 25 | 05.1393.0.000 | LABEL ●●● | 1 |
| 26 | 05.1395.0.000 | REPLACEMENT PARTS-LABEL ●●● | 1 |
| 27 | 11.5009.0.000 | TABLE SUPPORT | 1 |
| 28 | 08.6200.5.012 | SCREW M5-12 | 2 |
| 29 | 08.6700.5.000 | NUT M5 | 2 |
| 30 | 08.6850.5.000 | WASHER 5,3 | 2 |
| 31 | 19.0094.5.413 | FELT ●●● | 1 |
| 32 | 05.0043.1.000 | THREAD GUIDE | 3 |
| 33 | 08.6200.4.006 | SCREW M4-6 | 3 |
| 34 | 12.8000.1.001 | LABEL - AMF REECE | 1 |
| 35 | 17.0026.3.014 | SPRING | 1 |
| 36 | 12.1016.0.002 | NAIL 1,86x6,35 | 2 |
| 37 | 11.5007.0.000 | PLATE ●●● | 1 |
| 38 | 19.0095.1.405 | RUBBER ●●● | 1 |
| 39 | 12.8000.0.416 | LABEL CE UNI ●●● | 1 |
| 40 | 12.8000.0.107 | LABEL CB - CA ●●● | 1 |
| 41 | 17.0013.3.402 | SCREW M6 | 2 |
| 42 | 17.0019.0.232 | WASHER | 2 |
| 43 | 11.5011.0.000 | GUIDE | 1 |
| 44 | 22.0046.0.000 | THREAD GUIDE BRACKET | 2 |
| 45 | 08.6000.4.006 | SCREW M4-6 | 4 |
| 46 | 08.6832.6.000 | WASHER M6 | 2 |
| 47 | 12.0008.4.052 | LABEL GROUND ●●● | 1 |
| 48 | 12.1016.0.002 | NAIL 1,86x6,35 | 2 |
| 49 | 12.8000.1.001 | LABEL - AMF REECE ● | 1 |
| 50 | 04.9001.2.050 | LOWER IDLER S 105 | 1 |

# COVERS

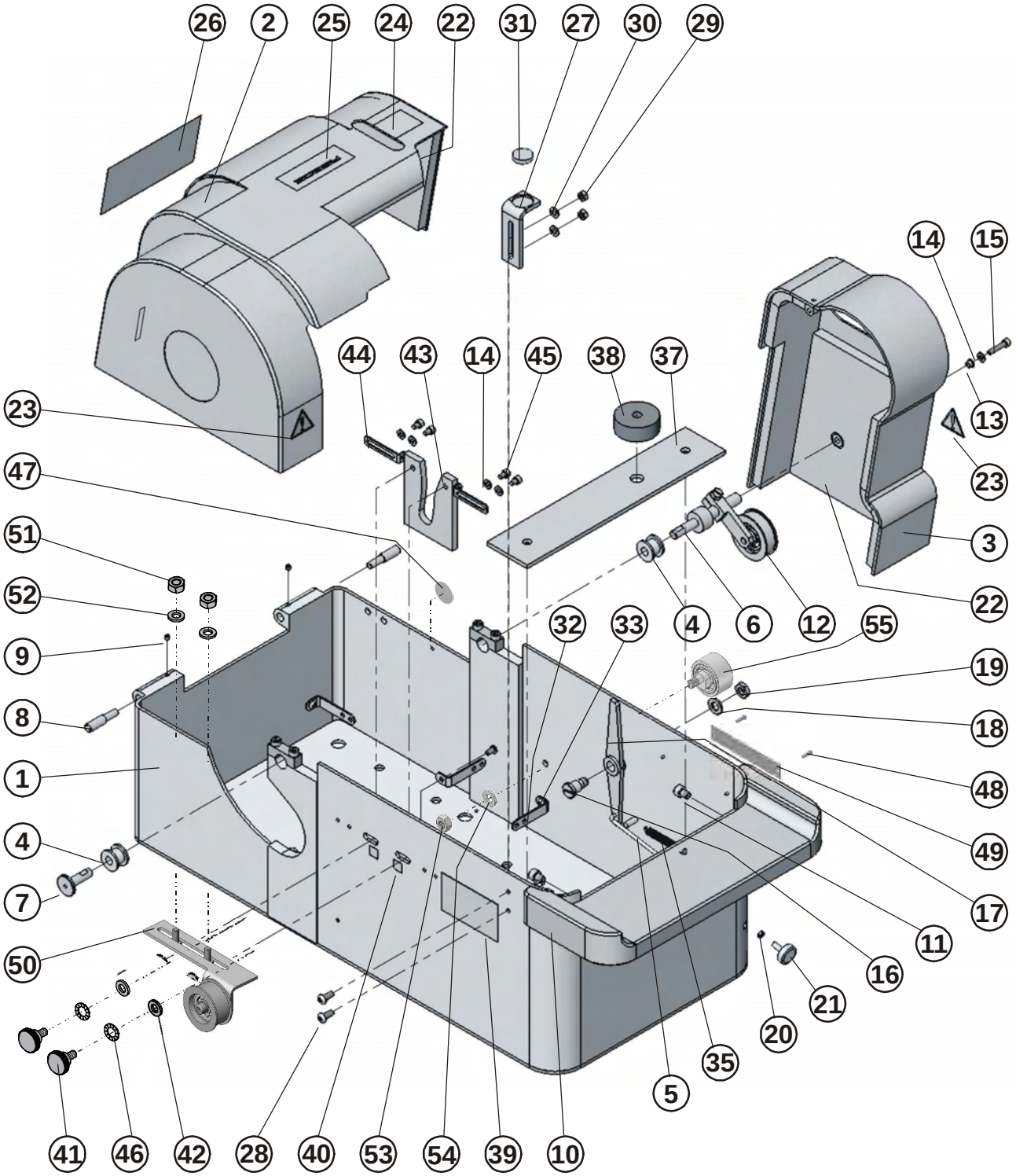
26
2
25
24
22
31
27
30
29
14
15
44
43
14
45
38
37
23
13
47
23
51
3
52
22
32
33
4
6
12
55
9
19
8
18
1
48
4
49
7
17
11
50
16
21
20
35
5
41
46
42
28
40
53
54
39
10

# COVERS

| DET | PART NUMBER | DESCRIPTION | QTY. |
|---|---|---|---|
| 51 | 08.6700.6.000 | NUT | 2 |
| 52 | 08.6850.6.000 | WASHER | 2 |
| 53 | 08.6700.6.300 | NUT | 1 |
| 54 | 08.6850.6.000 | WASHER | 1 |
| 55 | 11.5055.0.050 | TENSION PULLEY | 1 |

# TABLE

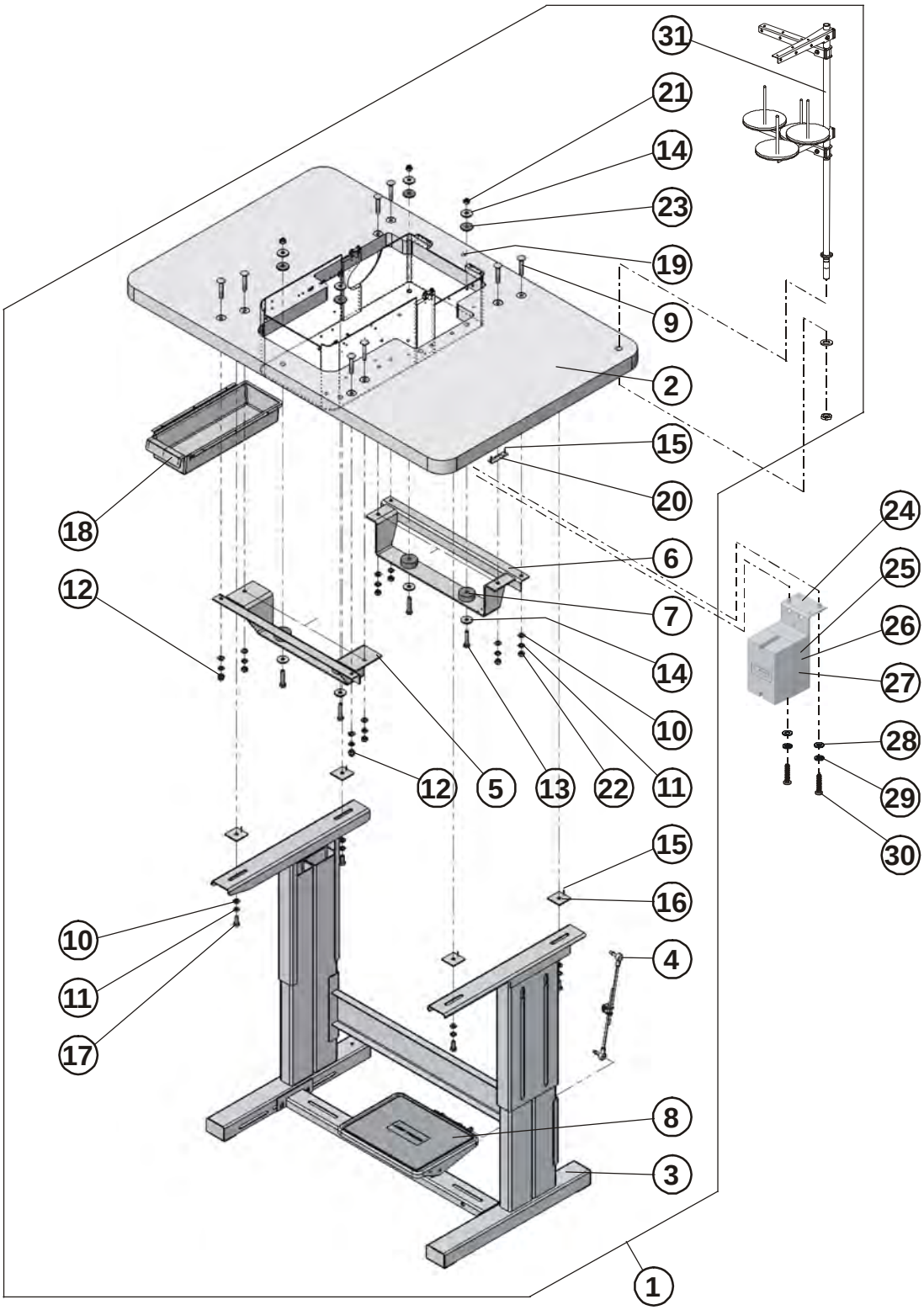
31
21
14
23
19
9
2
15
20
18
6
12
7
14
10
12
5
13
22
11
15
16
10
4
11
17
8
3
1
24
25
26
27
28
29
30

# TABLE

| DET | PART NUMBER | DESCRIPTION | QTY. |
|---|---|---|---|
| 01 | 04.9011.0.021 | TABLE 1 S105 - SEMIASSEMBLY | 1 |
| 02 | 04.9011.0.001 | TABLE TOP 1, S105 ●●● | (1) |
| 03 | 04.9000.2.123 | TABLE | (1) |
| 04 | 04.1956.2.000 | PITMAN ROD BAL | (1) |
| 05 | 19.0005.0.015 | FRAMEWORK FRONT | (1) |
| 06 | 19.0005.0.016 | FRAMEWORK BACK | (1) |
| 07 | 19.0095.1.405 | RUBBER ●●● | (4) |
| 08 | 22.0218.0.000 | FOOTSWITCH - ASSEMBLY | (1) |
| 09 | 08.6532.8.050 | SCREW M8-50 | (8) |
| 10 | 08.6852.8.000 | WASHER M8 | (12) |
| 11 | 08.6802.8.000 | SPRING WASHER M8 | (12) |
| 12 | 08.6722.8.000 | NUT M8 | (2) |
| 13 | 08.6312.8.040 | SCREW M8-40 | (4) |
| 14 | 17.0019.0.441 | WASHER | (8) |
| 15 | 12.4010.0.004 | NAIL 1,6x20 | (6) |
| 16 | 17.0094.0.200 | WASHER ●●● | (4) |
| 17 | 08.6312.8.020 | SCREW M8-20 | (4) |
| 18 | 12.0008.6.901 | BOX ●●● | (1) |
| 19 | 12.0008.6.915 | HOLDERBUNPON | (1) |
| 20 | 04.1416.1.003 | LABEL | (1) |
| 21 | 08.6733.8.000 | NUT M8 | (4) |
| 22 | 08.6702.8.000 | NUT M8 | (6) |
| 23 | 17.0095.1.272 | RUBBER WASHER | (4) |
| 24 | 17.0083.6.357 | BRACKET | 1 |
| 25 | 12.0008.4.206 | BOX SM-SM1-M ●●● | 1 |
| 26 | 12.0008.4.285 | UNDERVOLT.TRIP 230VAC ●●● | 1 |
| 27 | 12.0010.4.141 | MOTOR CIRCUIT BREAKER ●●● | 1 |
| 28 | 08.6850.6.000 | WASHER 6,4 | 2 |
| 29 | 08.6800.6.000 | WASHER 6 | 2 |
| 30 | 08.6310.6.016 | SCREW M6-16 | 2 |
| 31 | 17.0003.6.156 | THRED STAND - ASSEMBLY ●●● | (1) |

# DRIVE

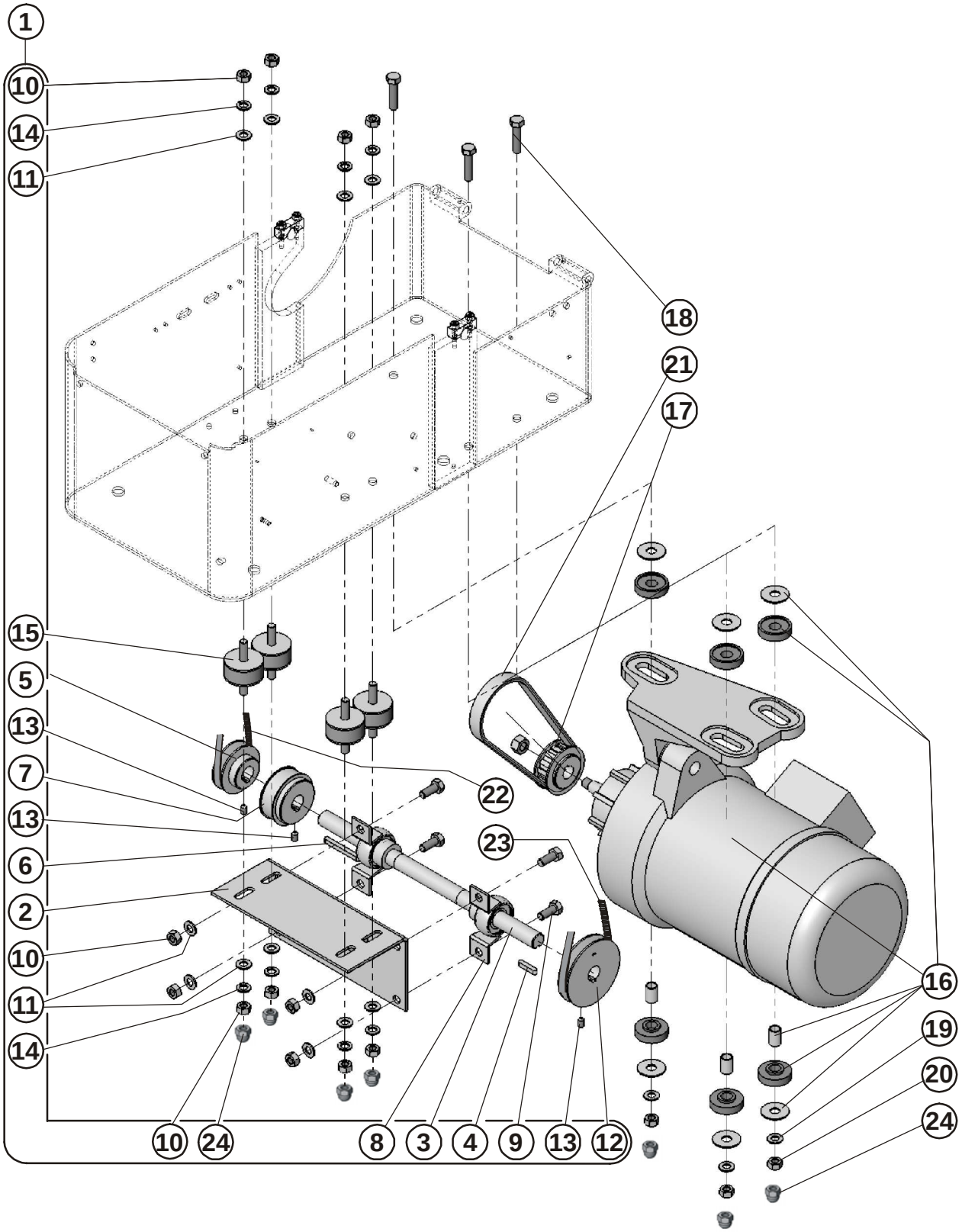
1
10
14
11
18
21
17
15
5
13
7
13
6
2
10
11
14
22
23
16
19
20
24
10
24
8
3
4
9
13
12

# DRIVE

| DET | PART NUMBER | DESCRIPTION | QTY. |
|---|---|---|---|
| 01 | 04.9000.0.051 | JACKSHAFT - ASSEMBLY | 1 |
| 02 | 04.9000.0.448 | HOLDER COUNTERSHAFT | (1) |
| 03 | 17.0034.0.400 | SHAFT | (1) |
| 04 | 17.0021.1.201 | KEY 5e7x5x25 | (1) |
| 05 | 17.0051.0.401 | PULLEY | (1) |
| 06 | 17.0021.1.202 | KEY 5e7x5x50 | (1) |
| 07 | 17.0055.4.402 | PULLEY 24z | (1) |
| 08 | 12.2010..0009 | INA PBY17 | (2) |
| 09 | 08.6312.8.020 | SCREW M8-20 | (4) |
| 10 | 08.6702.8.000 | NUT M8 | (12) |
| 11 | 08.6852.8.000 | WASHER M8 | (12) |
| 12 | 17.0051.0.403 | PULLEY | (1) |
| 13 | 08.6400.6.010 | SCREW M6-10 | (3) |
| 14 | 08.6800.8.000 | SPRING WASHER M8 | (8) |
| 15 | 18.0095.1.402 | RUBBER SILENT BLOCK ●●● | (4) |
| 16 | 17.0007.8.172 | MOTOR FIR 230V MONOFAZE | 1 |
| 17 | 17.0055.4.404 | GEAR 16Z | 1 |
| 18 | 08.6312.8.040 | SCREW M8-40 | 3 |
| 19 | 08.6852.8.000 | WASHER M8 | 3 |
| 20 | 08.6702.8.000 | NUT M8 | 3 |
| 21 | 04.9000.0.449 | GEAR BELT 187 L 050 ●●● | 1 |
| 22 | 12.5050.1.020 | V-BELT SPZ 862 Lw 875La ●●● | 1 |
| 23 | 12.5050.1.018 | V-BELT Z 1050Lw 10x1030Li ●●● | 1 |
| 24 | 08.6722.8.000 | NUT M8 | (4)+3 |

# ACCESSORIES

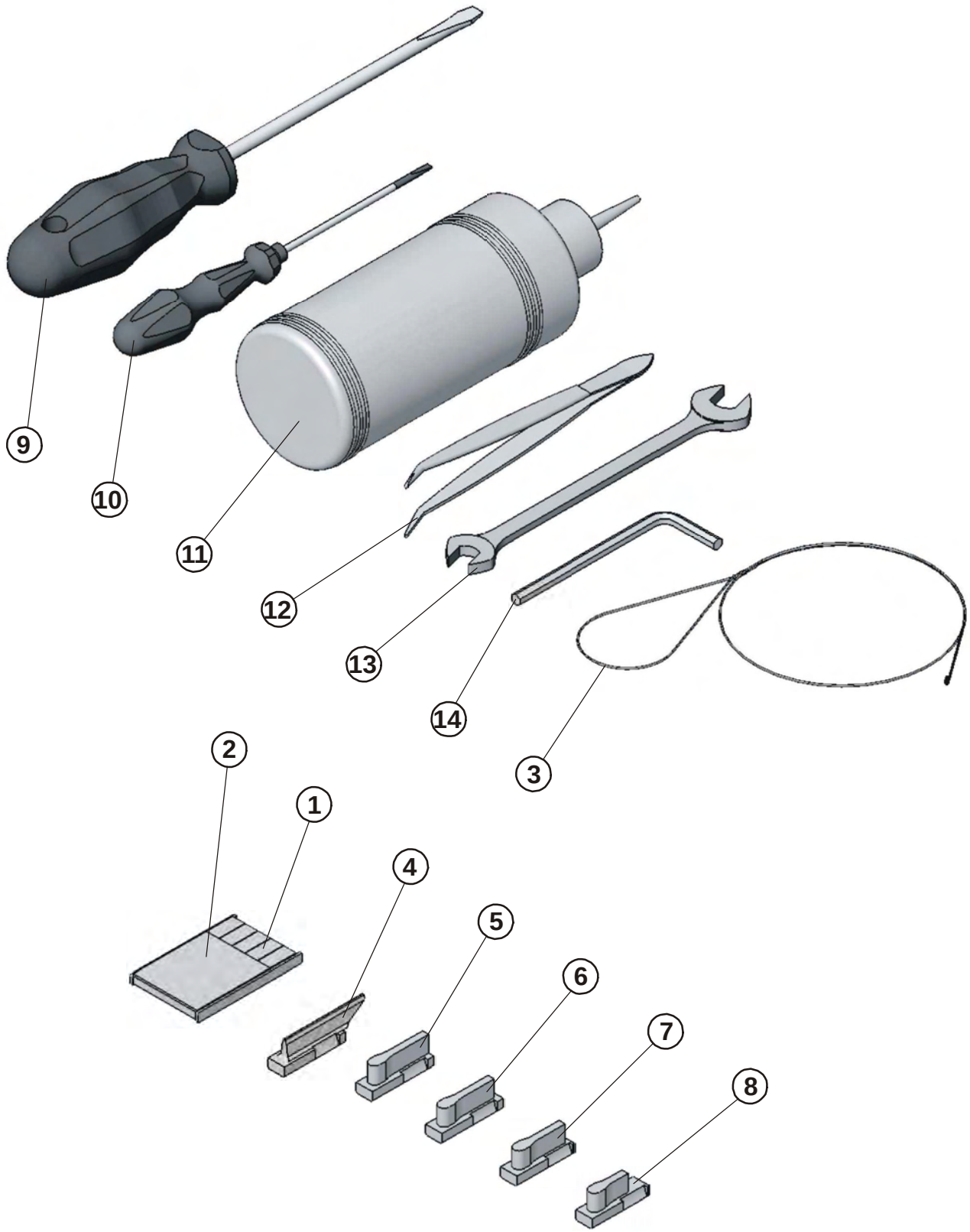

# ACCESSORIES

| DET | PART NUMBER | DESCRIPTION | QTY. |
|---|---|---|---|
| 01 | 12.0008.6.968 | NEEDLES BOX ●●● | 1 |
| 02 | 02.0558.0.111 | NEEDLE 558 Nm 100 | 5 |
| 03 | 17.0027.1.223 | WIRW THREADING | 1 |
| 04 | 11.0087.0.430 | KNIFE 0-38 L | 1 |
| 05 | 11.0064.5.854 | CUTTING STEEL 26 L | 1 |
| 06 | 11.0064.5.853 | CUTTING STEEL 24 L | 1 |
| 07 | 11.0064.5.852 | CUTTING STEEL 22 L | 1 |
| 08 | 11.0064.5.849 | CUTTING STEEL 16 L | 1 |
| 09 | 12.0008.6.005 | SCREWDRIVER | 1 |
| 10 | 12.0008.6.001 | SCREWDRIVER | 1 |
| 11 | 12.0008.6.978 | OIL CAN ●●● | 1 |
| 12 | 12.0008.6.215 | TWEEZERS PFAFF 145 | 1 |
| 13 | 12.0008.6.109 | FORK SPANNER 8-10 | 1 |
| 14 | 12.0008.6.102 | ALLEN WRENCH 4 | 1 |

# INDEX


| PART NUMBER | PAGE | DET | QTY |
|---|---|---|---|
| **01.1100.0.000** | | | |
| 01.1100.0.000 | 3-3 | 22 | 1 |
| 01.1113.0.000 | 3-13 | 11 | 1 |
| 01.2056.1.000 | 3-21 | 37 | 1 |
| 01.2075.0.000 | 3-25 | 20 | 2 |
| 01.4007.0.000 | 3-25 | 38 | 2 |
| 01.4074.0.000 | 3-13 | 05 | 1 |
| 01.4081.0.005 | 3-21 | 45 | 1 |
| 01.4081.0.009 | 3-9 | 06 | (1) |
| 01.4121.0.000 | 3-53 | 28 | (20) |
| 01.4426.0.000 | 3-51 | 04 | 2 |
| 01.4751.0.000 | 3-15 | 04 | (2) |
| **01.5002.0.000** | | | |
| 01.5002.0.000 | 3-13 | 27 | 1 |
| 01.5003.0.000 | 3-9 | 27 | (2) |
| 01.5003.0.000 | 3-47 | 25 | 1 |
| 01.5005.0.001 | 3-15 | 09 | 1 |
| 01.5006.0.001 | 3-41 | 31 | 1 |
| 01.5015.0.000 | 3-49 | 26 | (1) |
| 01.5019.0.000 | 3-47 | 24 | 1 |
| 01.5020.0.000 | 3-47 | 23 | 1 |
| 01.5023.0.000 | 3-51 | 21 | 1 |
| 01.5026.0.000 | 3-21 | 48 | 2 |
| 01.5041.0.000 | 3-35 | 09 | 1 |
| 01.5054.0.000 | 3-37 | 15 | 2 |
| 01.5055.0.000 | 3-31 | 27 | 1 |
| 01.5055.0.000 | 3-49 | 03 | (1) |
| 01.5055.0.051 | 3-31 | 09 | 1 |
| 01.5134.0.000 | 3-35 | 26 | 1 |
| 01.5163.0.000 | 3-13 | 28 | 1 |
| 01.5433.0.000 | 3-35 | 27 | 1 |
| 01.5447.0.000 | 3-29 | 04 | (1) |
| 01.5448.0.000 | 3-29 | 12 | (1) |
| 01.5473.0.000 | 3-3 | 21 | 1 |
| 01.5473.0.000 | 3-47 | 26 | 1 |
| 01.5475.0.000 | 3-53 | 31 | (1) |
| 01.5602.0.000 | 3-49 | 27 | (1) |
| 01.5603.0.000 | 3-13 | 29 | 1 |
| 01.5619.0.000 | 3-21 | 41 | 1 |
| 01.5620.0.000 | 3-21 | 40 | 1 |
| 01.5683.0.000 | 3-25 | 34 | 3 |
| 01.6280.0.000 | 3-45 | 14 | (2) |
| 01.6334.0.000 | 3-39 | 20 | 1 |
| 01.6384.0.000 | 3-5 | 24 | 1 |
| 01.6837.0.000 | 3-41 | 19 | (1) |
| 01.6970.0.000 | 3-25 | 04 | 1 |
| 01.7040.0.000 | 3-25 | 24 | 1 |
| 01.7630.0.001 | 3-15 | 05 | (1) |
| 02.0558.0.111 | | | |
| 02.0558.0.111 | 3-9 | 23 | 1 |
| 02.0558.0.111 | 3-65 | 02 | 5 |
| **04.1416.1.003** | | | |
| 04.1416.1.003 | 3-61 | 20 | (1) |
| 04.1956.2.000 | 3-61 | 04 | (1) |
| 04.9000.0.051 | 3-63 | 01 | 1 |
| 04.9000.0.448 | 3-63 | 02 | (1) |
| 04.9000.0.449 | 3-63 | 21 | 1 |
| 04.9000.2.123 | 3-61 | 03 | (1) |
| 04.9001.2.050 | 3-57 | 48 | 1 |
| 04.9011.0.001 | 3-61 | 02 | (1) |
| 04.9011.0.021 | 3-61 | 01 | 1 |
| **05.0043.1.000** | | | |
| 05.0043.1.000 | 3-13 | 17 | 1 |
| 05.0043.1.000 | 3-57 | 32 | 3 |
| 05.0144.0.000 | 3-49 | 30 | (1) |
| 05.0413.0.000 | 3-3 | 36 | 1 |
| 05.1105.0.000 | 3-19 | 08 | 2 |
| 05.1389.0.000 | 3-3 | 14 | 1 |
| 05.1393.0.000 | 3-57 | 25 | 1 |
| 05.1395.0.000 | 3-57 | 26 | 1 |
| 05.9000.0.102 | 3-57 | 24 | 1 |
| **07.0401.0.000** | | | |
| 07.0401.0.000 | 3-23 | 54 | 1 |
| 07.0401.0.009 | 3-19 | 14 | 1 |
| **08.6000.3.005** | | | |
| 08.6000.3.005 | 3-35 | 01 | 1 |
| 08.6000.3.006 | 3-13 | 21 | 1 |
| 08.6000.3.008 | 3-21 | 34 | 2 |
| 08.6000.3.008 | 3-35 | 23 | (1) |
| 08.6000.3.010 | 3-9 | 08 | (1) |
| **08.6000.4.005** | | | |
| 08.6000.4.005 | 3-21 | 36 | 1 |
| 08.6000.4.006 | 3-57 | 45 | 4 |
| 08.6000.4.008 | 3-35 | 17 | (1) |
| 08.6000.4.008 | 3-37 | 11 | 2 |
| 08.6000.4.010 | 3-3 | 15 | 4 |
| 08.6000.4.010 | 3-23 | 53 | (1) |
| 08.6000.4.010 | 3-27 | 04 | (2) |
| 08.6000.4.010 | 3-31 | 15 | 2 |
| 08.6000.4.010 | 3-45 | 24 | 1 |
| 08.6000.4.012 | 3-47 | 18 | 2 |
| 08.6000.4.016 | 3-3 | 11 | 2 |
| 08.6000.4.016 | 3-13 | 26 | 2 |
| 08.6000.4.016 | 3-45 | 20 | 1 |
| 08.6000.4.020 | 3-53 | 24 | (1) |
| 08.6000.4.020 | 3-57 | 15 | 1 |
| 08.6000.4.025 | 3-21 | 29 | 1 |
| 08.6000.4.040 | 3-31 | 11 | (1) |
| 08.6000.4.045 | 3-19 | 05 | 1 |
| 08.6000.4.060 | 3-41 | 23 | (1) |
| **08.6000.5.008** | | | |
| 08.6000.5.008 | 3-47 | 04 | 1 |
| 08.6000.5.010 | 3-45 | 21 | 3 |
| 08.6000.5.010 | 3-47 | 08 | (1) |
| 08.6000.5.012 | 3-3 | 35 | 2 |
| 08.6000.5.012 | 3-5 | 23 | 1 |
| 08.6000.5.012 | 3-27 | 19 | 4 |
| 08.6000.5.012 | 3-29 | 14 | (2) |
| 08.6000.5.012 | 3-41 | 16 | (1) |
| 08.6000.5.012 | 3-45 | 28 | 1 |
| 08.6000.5.016 | 3-25 | 16 | (1) |
| 08.6000.5.016 | 3-35 | 19 | (1) |
| 08.6000.5.016 | 3-41 | 05 | (2) |
| 08.6000.5.016 | 3-53 | 07 | (4) |
| 08.6000.5.020 | 3-3 | 31 | 1 |
| 08.6000.5.020 | 3-25 | 08 | (1) |
| 08.6000.5.020 | 3-29 | 07 | (1) |
| 08.6000.5.030 | 3-45 | 19 | 1 |
| 08.6000.5.050 | 3-27 | 13 | 1 |
| **08.6000.6.008** | | | |
| 08.6000.6.008 | 3-57 | 11 | 2 |
| 08.6000.6.012 | 3-43 | 17 | 2 |
| 08.6000.6.016 | 3-11 | 14 | (1) |
| 08.6000.6.016 | 3-53 | 06 | (3) |
| 08.6000.6.018 | 3-37 | 09 | 2 |
| 08.6000.8.016 | 3-39 | 14 | 1 |
| 08.6000.8.016 | 3-43 | 16 | 1 |
| 08.6000.8.020 | 3-39 | 18 | (1) |
| 08.6000.8.025 | 3-39 | 23 | (1) |
| 08.6000.8.025 | 3-43 | 15 | (1) |
| 08.6000.8.050 | 3-39 | 16 | 1 |
| 08.6000.8.055 | 3-3 | 07 | 4 |
| **08.6010.3.006** | | | |
| 08.6010.3.006 | 3-19 | 15 | 2 |
| 08.6010.3.006 | 3-21 | 12 | 4 |
| 08.6010.3.006 | 3-25 | 25 | 2 |
| 08.6010.3.006 | 3-41 | 28 | (3) |
| 08.6010.3.012 | 3-53 | 38 | 1 |
| 08.6010.4.012 | 3-21 | 24 | 2 |
| 08.6010.4.012 | 3-55 | 11 | 4 |




**e-mail: service@amfreece.cz; parts@amfreece.cz; website: www.amfreece.com**
**Phone: +420 582 309 286; Fax: +420 582 360 606**

# INDEX


| PART NUMBER | PAGE | DET | QTY |
|---|---|---|---|
| 08.6010.4.016 | 3-53 | 35 | 1 |
| 08.6010.5.012 | 3-45 | 25 | 1 |
| 08.6010.5.012 | 3-47 | 02 | 1 |
| 08.6032.4.010 | 3-13 | 18 | 1 |
| 08.6100.5.010 | 3-31 | 25 | 2 |
| 08.6112.3.004 | 3-55 | 20 | 6 |
| **08.6200.4.006** | | | |
| 08.6200.4.006 | 3-11 | 16 | 1 |
| 08.6200.4.006 | 3-25 | 26 | 4 |
| 08.6200.4.006 | 3-45 | 17 | 4 |
| 08.6200.4.006 | 3-51 | 06 | 4 |
| 08.6200.4.006 | 3-57 | 33 | 3 |
| 08.6200.4.008 | 3-3 | 26 | 4 |
| 08.6200.4.008 | 3-45 | 27 | 1 |
| 08.6200.4.008 | 3-49 | 05 | (1) |
| 08.6200.4.008 | 3-53 | 21 | (2) |
| **08.6200.5.008** | | | |
| 08.6200.5.008 | 3-3 | 29 | 2 |
| 08.6200.5.008 | 3-29 | 06 | (1) |
| 08.6200.5.010 | 3-9 | 29 | 2 |
| 08.6200.5.012 | 3-29 | 25 | (1) |
| 08.6200.5.012 | 3-41 | 06 | (6) |
| 08.6200.5.012 | 3-45 | 18 | 1 |
| 08.6200.5.012 | 3-57 | 28 | 2 |
| 08.6200.5.020 | 3-13 | 25 | 1 |
| 08.6200.6.016 | 3-43 | 02 | 2 |
| 08.6202.4.010 | 3-9 | 21 | 4 |
| **08.6300.8.020** | | | |
| 08.6300.8.020 | 3-27 | 18 | 2 |
| 08.6310.3.012 | 3-13 | 23 | 1 |
| 08.6310.6.016 | 3-49 | 23 | (2) |
| 08.6310.6.016 | 3-61 | 30 | 2 |
| 08.6312.8.020 | 3-61 | 17 | (4) |
| 08.6312.8.020 | 3-63 | 09 | (4) |
| 08.6312.8.040 | 3-61 | 13 | (4) |
| 08.6312.8.040 | 3-63 | 18 | 3 |
| **08.6400.3.005** | | | |
| 08.6400.3.005 | 3-9 | 33 | (2)+1 |
| 08.6400.3.010 | 3-53 | 40 | 1 |
| 08.6400.3.010 | 3-55 | 26 | 2 |
| 08.6400.4.005 | 3-57 | 09 | 2 |
| 08.6400.4.006 | 3-7 | 06 | 2 |
| 08.6400.4.006 | 3-17 | 26 | 1 |
| 08.6400.4.006 | 3-55 | 10 | 2 |
| 08.6400.4.008 | 3-17 | 11 | 1 |
| 08.6400.5.005 | 3-21 | 39 | 1 |
| 08.6400.5.005 | 3-29 | 11 | (1) |
| 08.6400.5.008 | 3-17 | 25 | 1 |
| 08.6400.5.008 | 3-41 | 32 | 2 |
| 08.6400.5.010 | 3-11 | 28 | (1) |
| 08.6400.5.030 | 3-11 | 17 | 1 |
| 08.6400.5.040 | 3-35 | 24 | 1 |
| 08.6400.5.305 | 3-29 | 17 | 2 |
| 08.6400.5.305 | 3-39 | 21 | (2) |
| 08.6400.6.006 | 3-55 | 21 | 2 |
| 08.6400.6.010 | 3-25 | 29 | 1 |
| 08.6400.6.010 | 3-39 | 19 | (2) |
| 08.6400.6.010 | 3-63 | 13 | (3) |
| 08.6400.6.050 | 3-49 | 21 | (1) |
| 08.6400.8.008 | 3-17 | 18 | 1 |
| 08.6400.8.416 | 3-27 | 15 | 2 |
| 08.6400.8.416 | 3-51 | 08 | 2 |
| 08.6522.4.006 | 3-3 | 34 | 1 |
| 08.6532.8.050 | 3-61 | 09 | (8) |
| **08.6700.3.000** | | | |
| 08.6700.3.000 | 3-13 | 15 | 1 |
| 08.6700.3.000 | 3-17 | 04 | (1) |
| 08.6700.3.000 | 3-35 | 07 | 1 |
| 08.6700.3.000 | 3-53 | 37 | 1 |
| 08.6700.3.000 | 3-57 | 20 | 1 |
| 08.6700.4.000 | 3-31 | 12 | (2) |
| 08.6700.4.000 | 3-31 | 30 | 1 |
| 08.6700.4.000 | 3-35 | 12 | 1 |
| 08.6700.4.000 | 3-53 | 23 | (4) |
| 08.6700.4.000 | 3-53 | 34 | 1 |
| 08.6700.5.000 | 3-27 | 12 | 1 |
| 08.6700.5.000 | 3-29 | 26 | (1) |
| 08.6700.5.000 | 3-31 | 18 | 1 |
| 08.6700.5.000 | 3-35 | 25 | 1 |
| 08.6700.5.000 | 3-57 | 29 | 2 |
| 08.6700.6.000 | 3-31 | 24 | 2+(1) |
| 08.6700.6.000 | 3-49 | 08 | (1) |
| 08.6700.6.000 | 3-49 | 19 | (3) |
| 08.6700.6.000 | 3-53 | 09 | (3) |
| 08.6700.6.000 | 3-57 | 49 | 2 |
| 08.6700.6.300 | 3-17 | 22 | 1 |
| 08.6700.6.300 | 3-27 | 17 | 8 |
| 08.6700.6.300 | 3-53 | 42 | (2) |
| 08.6700.6.300 | 3-59 | 51 | 1 |
| 08.6700.8.000 | 3-39 | 12 | 1 |
| 08.6702.8.000 | 3-61 | 22 | (6) |
| 08.6702.8.000 | 3-63 | 10 | (12) |
| 08.6702.8.000 | 3-63 | 20 | 3 |
| 08.6707.1.000 | 3-37 | 14 | 4 |
| **08.6710.0.300** | | | |
| 08.6710.0.300 | 3-49 | 29 | (1) |
| 08.6710.3.000 | 3-55 | 22 | 2 |
| 08.6710.4.000 | 3-55 | 19 | 6 |
| 08.6710.5.000 | 3-17 | 08 | (2) |
| 08.6710.5.000 | 3-29 | 08 | (1) |
| 08.6710.6.000 | 3-49 | 25 | (3) |
| 08.6710.6.300 | 3-49 | 31 | (1) |
| 08.6710.8.000 | 3-53 | 17 | (1) |
| 08.6710.8.400 | 3-17 | 23 | 1 |
| 08.6710.8.400 | 3-25 | 10 | (1) |
| 08.6710.8.400 | 3-27 | 16 | 2 |
| 08.6710.9.500 | 3-5 | 22 | 1 |
| 08.6712.8.000 | 3-57 | 19 | 1 |
| 08.6717.0.000 | 3-33 | 04 | 2 |
| 08.6722.8.000 | 3-61 | 12 | (2) |
| 08.6722.8.000 | 3-63 | 24 | (4)+3 |
| 08.6733.8.000 | 3-61 | 21 | (4) |
| **08.6800.4.000** | | | |
| 08.6800.4.000 | 3-31 | 23 | 1 |
| 08.6800.6.000 | 3-61 | 29 | 2 |
| 08.6800.8.000 | 3-3 | 24 | 3 |
| 08.6800.8.000 | 3-63 | 14 | (8) |
| 08.6800.9.000 | 3-5 | 21 | 1 |
| 08.6802.8.000 | 3-61 | 11 | (12) |
| 08.6832.4.000 | 3-3 | 13 | 2 |
| 08.6832.4.000 | 3-27 | 07 | (2) |
| 08.6832.4.000 | 3-41 | 22 | (1) |
| 08.6832.6.000 | 3-57 | 46 | 2 |
| 08.6832.8.000 | 3-27 | 23 | 2 |
| 08.6850.4.000 | 3-19 | 04 | 1 |
| 08.6850.4.000 | 3-41 | 11 | (1) |
| 08.6850.4.000 | 3-49 | 06 | (1) |
| 08.6850.4.000 | 3-57 | 14 | 5 |
| 08.6850.5.000 | 3-11 | 15 | 1 |
| 08.6850.5.000 | 3-27 | 20 | 4 |
| 08.6850.5.000 | 3-45 | 22 | 3 |
| 08.6850.5.000 | 3-47 | 01 | 1 |
| 08.6850.5.000 | 3-57 | 30 | 2 |
| 08.6850.6.000 | 3-11 | 23 | 1 |
| 08.6850.6.000 | 3-31 | 19 | 1 |
| 08.6850.6.000 | 3-37 | 08 | 2 |
| 08.6850.6.000 | 3-43 | 05 | 2 |
| 08.6850.6.000 | 3-49 | 18 | (2) |
| 08.6850.6.000 | 3-57 | 50 | 2 |
| 08.6850.6.000 | 3-59 | 52 | 1 |
| 08.6850.6.000 | 3-61 | 28 | 2 |
| 08.6850.8.000 | 3-3 | 23 | 1 |
| 08.6850.8.000 | 3-27 | 21 | 2 |




e-mail: service@amfreece.cz; parts@amfreece.cz; website: www.amfreece.com
Phone: +420 582 309 286; Fax: +420 582 360 606

# INDEX


| PART NUMBER | PAGE | DET | QTY | PART NUMBER | PAGE | DET | QTY | PART NUMBER | PAGE | DET | QTY |
|---|---|---|---|---|---|---|---|---|---|---|---|
| 08.6850.8.000 | 3-39 | 10 | 2 | **11.0064.5.849** | | | | **11.1100.0.400** | | | |
| 08.6850.8.000 | 3-43 | 14 | 1 | 11.0064.5.849 | 3-65 | 08 | 1 | 11.1100.0.400 | 3-5 | 03 | 1 |
| 08.6850.8.000 | 3-53 | 16 | (1) | 11.0064.5.850 | 3-41 | 24 | 1 | 11.1101.0.990 | 3-33 | 03 | 1 |
| 08.6850.8.000 | 3-57 | 18 | 1 | 11.0064.5.852 | 3-65 | 07 | 1 | 11.1102.0.000 | 3-33 | 01 | 1 |
| 08.6852.8.000 | 3-61 | 10 | (12) | 11.0064.5.853 | 3-65 | 06 | 1 | 11.1108.0.000 | 3-29 | 15 | 1 |
| 08.6852.8.000 | 3-63 | 11 | (12) | 11.0064.5.854 | 3-65 | 05 | 1 | 11.1109.0.000 | 3-29 | 21 | 1 |
| 08.6852.8.000 | 3-63 | 19 | 3 | 11.0087.0.430 | 3-65 | 04 | 1 | 11.1111.0.000 | 3-29 | 16 | 1 |
| 08.6872.0.000 | 3-33 | 05 | 2 | 11.0087.0.432 | 3-41 | 04 | 1 | 11.1113.0.000 | 3-31 | 01 | 1 |
| | | | | 11.0087.0.434 | 3-41 | 04 | 1 | 11.1118.0.000 | 3-31 | 04 | 1 |
| **10.1003.0.000** | | | | | | | | 11.1120.0.000 | 3-31 | 08 | 1 |
| 10.1003.0.000 | 3-13 | 13 | 1 | **11.1001.0.000** | | | | 11.1122.0.010 | 3-7 | 03 | 1 |
| 10.1004.0.000 | 3-9 | 18 | 1 | 11.1001.0.000 | 3-3 | 04 | 1 | 11.1122.0.979 | 3-7 | 00 | 0 |
| 10.1004.0.000 | 3-13 | 12 | 1 | 11.1011.0.000 | 3-9 | 32 | 1 | 11.1122.0.980 | 3-7 | 00 | 0 |
| 10.1008.0.000 | 3-13 | 20 | 1 | 11.1023.0.000 | 3-9 | 04 | (1) | 11.1122.0.980 | 3-17 | 24 | 1 |
| 10.1009.0.000 | 3-13 | 19 | 1 | 11.1026.0.000 | 3-17 | 17 | 1 | 11.1122.0.998 | 3-7 | 00 | 0 |
| 10.1010.0.000 | 3-13 | 06 | 1 | 11.1028.0.050 | 3-9 | 01 | 1 | 11.1122.0.999 | 3-7 | 00 | 0 |
| 10.1021.2.000 | 3-9 | 11 | (2) | 11.1030.0.000 | 3-19 | 09 | 1 | 11.1124.0.000 | 3-31 | 03 | 1 |
| 10.1032.0.000 | 3-9 | 03 | (1) | 11.1031.0.000 | 3-19 | 10 | 1 | 11.1158.0.000 | 3-13 | 03 | 1 |
| 10.1062.0.000 | 3-17 | 19 | 1 | 11.1035.0.000 | 3-11 | 05 | 1 | 11.1159.0.000 | 3-13 | 01 | 1 |
| 10.1077.0.000 | 3-13 | 08 | 1 | 11.1037.0.000 | 3-11 | 11 | 1 | 11.1160.0.000 | 3-39 | 05 | 1 |
| 10.1078.1.000 | 3-13 | 09 | 1 | 11.1038.1.000 | 3-11 | 02 | 1 | 11.1167.0.000 | 3-29 | 02 | (1) |
| 10.1080.0.000 | 3-3 | 17 | 1 | 11.1039.0.000 | 3-11 | 04 | 1 | 11.1167.0.050 | 3-29 | 01 | 1 |
| 10.1083.0.000 | 3-13 | 07 | 1 | 11.1040.0.000 | 3-11 | 12 | 1 | 11.1168.0.000 | 3-29 | 05 | (1) |
| 10.1091.1.803 | 3-5 | 04 | 1 | 11.1041.0.000 | 3-11 | 01 | 1 | 11.1169.0.000 | 3-29 | 03 | (1) |
| 10.1145.2.000 | 3-3 | 12 | 1 | 11.1043.0.000 | 3-11 | 07 | 1 | 11.1171.0.000 | 3-29 | 20 | 2 |
| 10.1180.0.000 | 3-3 | 19 | 1 | 11.1044.0.000 | 3-13 | 24 | 1 | 11.1175.0.000 | 3-13 | 22 | 1 |
| 10.1181.0.000 | 3-3 | 20 | 1 | 11.1047.0.000 | 3-7 | 01 | 1 | 11.1177.0.000 | 3-13 | 02 | 1 |
| | | | | 11.1051.0.000 | 3-15 | 02 | (1) | 11.1178.0.000 | 3-13 | 04 | 1 |
| **10.2015.0.000** | | | | 11.1051.0.050 | 3-15 | 01 | 1 | 11.1184.0.000 | 3-29 | 10 | (1) |
| 10.2015.0.000 | 3-47 | 11 | 1 | 11.1052.0.000 | 3-15 | 03 | (1) | 11.1188.0.000 | 3-3 | 05 | 1 |
| 10.2031.0.000 | 3-51 | 02 | 2 | 11.1054.0.000 | 3-15 | 07 | 1 | 11.1195.0.000 | 3-3 | 18 | 1 |
| 10.2071.0.000 | 3-47 | 17 | 1 | 11.1058.0.050 | 3-17 | 10 | 1 | 11.1198.0.000 | 3-35 | 02 | 1 |
| 10.2072.0.000 | 3-47 | 03 | 1 | 11.1059.0.000 | 3-17 | 09 | 2 | | | | |
| 10.2075.0.000 | 3-53 | 25 | (1) | 11.1060.0.050 | 3-17 | 12 | 1 | **11.2001.0.000** | | | |
| 10.2257.0.000 | 3-47 | 19 | 1 | 11.1061.0.000 | 3-17 | 03 | (1) | 11.2001.0.000 | 3-45 | 01 | 1 |
| 10.2258.0.000 | 3-47 | 21 | 1 | 11.1063.0.000 | 3-17 | 14 | 1 | 11.2002.0.000 | 3-55 | 07 | 2 |
| 10.2259.0.000 | 3-47 | 20 | 1 | 11.1064.0.000 | 3-17 | 16 | 1 | 11.2003.0.000 | 3-55 | 09 | 1 |
| 10.2260.0.001 | 3-47 | 05 | 1 | 11.1066.0.000 | 3-17 | 15 | 1 | 11.2004.0.000 | 3-55 | 08 | 1 |
| 10.2264.0.000 | 3-45 | 04 | 2 | 11.1067.0.000 | 3-17 | 13 | 1 | 11.2005.0.000 | 3-55 | 05 | 2 |
| 10.3033.0.017 | 3-51 | 10 | 1 | 11.1068.0.000 | 3-41 | 13 | (1) | 11.2006.0.000 | 3-51 | 09 | 1 |
| 10.3080.0.000 | 3-25 | 18 | 1 | 11.1068.0.050 | 3-41 | 12 | 1 | 11.2008.0.000 | 3-51 | 03 | 2 |
| 10.3089.2.000 | 3-35 | 21 | 1 | 11.1071.0.000 | 3-41 | 30 | (1) | 11.2009.0.000 | 3-51 | 01 | 2 |
| 10.3250.1.000 | 3-37 | 07 | 2 | 11.1072.0.000 | 3-41 | 20 | (1) | 11.2012.0.000 | 3-47 | 06 | 1 |
| 10.3258.0.000 | 3-37 | 10 | 1 | 11.1074.0.000 | 3-41 | 21 | 1 | 11.2013.0.000 | 3-47 | 10 | 1 |
| 10.3607.1.000 | 3-3 | 25 | 2 | 11.1075.0.000 | 3-39 | 04 | 1 | 11.2016.0.000 | 3-45 | 09 | 1 |
| 10.4010.2.000 | 3-21 | 14 | 1 | 11.1082.0.000 | 3-3 | 06 | 1 | 11.2018.0.000 | 3-45 | 07 | 1 |
| 10.4012.2.004 | 3-21 | 25 | 1 | 11.1090.0.300 | 3-5 | 01 | 1 | 11.2021.0.000 | 3-53 | 36 | 1 |
| 10.4030.0.000 | 3-13 | 14 | 1 | 11.1091.0.000 | 3-7 | 07 | 1 | 11.2023.0.000 | 3-53 | 14 | (1) |
| 10.4035.0.000 | 3-21 | 35 | 1 | 11.1094.0.000 | 3-5 | 02 | 1 | 11.2024.0.000 | 3-53 | 27 | (2) |
| | | | | 11.1096.0.400 | 3-5 | 05 | 1 | 11.2025.0.000 | 3-53 | 10 | (2) |

# INDEX


| PART NUMBER | PAGE | DET | QTY | PART NUMBER | PAGE | DET | QTY | PART NUMBER | PAGE | DET | QTY |
|---|---|---|---|---|---|---|---|---|---|---|---|
| 11.2026.0.002 | 3-53 | 03 | (1) | 11.3017.0.000 | 3-39 | 15 | 1 | 11.3259.0.001 | 3-37 | 12 | 1 |
| 11.2026.0.003 | 3-53 | 04 | (1) | 11.3017.0.000 | 3-43 | 03 | 1 | 11.3259.0.002 | 3-37 | 13 | 1 |
| 11.2026.0.005 | 3-53 | 05 | (1) | 11.3019.0.000 | 3-43 | 07 | 1 | 11.3300.0.000 | 3-43 | 10 | 1 |
| 11.2026.0.006 | 3-53 | 13 | (1) | 11.3021.0.001 | 3-43 | 13 | 1 | 11.3301.0.000 | 3-43 | 08 | 2 |
| 11.2026.0.050 | 3-53 | 01 | 1 | 11.3021.0.002 | 3-43 | 11 | 1 | 11.3302.0.000 | 3-43 | 09 | 1 |
| 11.2027.0.000 | 3-53 | 12 | (1) | 11.3021.0.003 | 3-43 | 12 | 1 | 11.3303.0.000 | 3-43 | 01 | 1 |
| 11.2028.0.000 | 3-53 | 11 | (1) | 11.3022.0.050 | 3-49 | 12 | 1 | | | | |
| 11.2033.0.000 | 3-51 | 12 | 1 | 11.3022.1.000 | 3-49 | 14 | (1) | **11.4001.0.050** | | | |
| 11.2034.0.000 | 3-51 | 13 | 1 | 11.3023.1.000 | 3-49 | 13 | (1) | 11.4001.0.050 | 3-21 | 01 | 1 |
| 11.2037.0.000 | 3-51 | 17 | 2 | 11.3024.0.000 | 3-49 | 24 | (1) | 11.4002.0.000 | 3-21 | 11 | (1) |
| 11.2039.0.000 | 3-51 | 14 | 1 | 11.3025.0.000 | 3-49 | 15 | (1) | 11.4002.0.050 | 3-21 | 08 | 1 |
| 11.2040.0.000 | 3-51 | 15 | 1 | 11.3027.0.000 | 3-27 | 08 | 1 | 11.4004.0.000 | 3-21 | 07 | 1 |
| 11.2043.0.000 | 3-55 | 02 | 1 | 11.3029.0.000 | 3-49 | 02 | (1) | 11.4005.0.000 | 3-21 | 06 | 1 |
| 11.2044.0.000 | 3-55 | 04 | 1 | 11.3029.0.050 | 3-49 | 01 | 1 | 11.4006.0.000 | 3-21 | 05 | 1 |
| 11.2047.0.000 | 3-55 | 01 | 1 | 11.3032.0.000 | 3-49 | 22 | (1) | 11.4007.0.000 | 3-21 | 02 | 1 |
| 11.2048.0.000 | 3-55 | 03 | 1 | 11.3034.0.000 | 3-43 | 04 | 1 | 11.4008.0.000 | 3-21 | 04 | 1 |
| 11.2051.0.000 | 3-51 | 05 | 2 | 11.3035.0.000 | 3-27 | 11 | 2 | 11.4009.0.000 | 3-21 | 03 | 1 |
| 11.2061.0.000 | 3-45 | 08 | 1 | 11.3046.0.000 | 3-25 | 15 | 1 | 11.4011.0.000 | 3-21 | 10 | (1) |
| 11.2069.0.000 | 3-45 | 11 | (1) | 11.3047.0.000 | 3-25 | 01 | 1 | 11.4020.0.000 | 3-21 | 31 | 1 |
| 11.2069.0.050 | 3-45 | 10 | 1 | 11.3050.0.000 | 3-25 | 02 | 1 | 11.4201.0.000 | 3-21 | 09 | (1) |
| 11.2069.0.901 | 3-45 | 13 | (1) | 11.3054.0.000 | 3-25 | 36 | 1 | 11.4202.0.000 | 3-35 | 03 | 1 |
| 11.2069.0.902 | 3-45 | 12 | (1) | 11.3061.0.000 | 3-27 | 05 | (2) | | | | |
| 11.2070.0.000 | 3-47 | 16 | 1 | 11.3062.0.000 | 3-27 | 03 | (1) | **11.5001.1.000** | | | |
| 11.2073.0.000 | 3-47 | 07 | 1 | 11.3064.0.000 | 3-27 | 02 | (1) | 11.5001.1.000 | 3-57 | 01 | 1 |
| 11.2074.0.000 | 3-53 | 20 | (1) | 11.3064.0.050 | 3-27 | 01 | 1 | 11.5003.0.000 | 3-57 | 05 | 1 |
| 11.2086.0.000 | 3-53 | 19 | (1) | 11.3065.0.000 | 3-27 | 02 | (1) | 11.5004.0.000 | 3-57 | 04 | 2 |
| 11.2087.0.000 | 3-53 | 30 | (2) | 11.3065.0.050 | 3-27 | 01 | 1 | 11.5005.0.000 | 3-57 | 10 | 1 |
| 11.2088.0.000 | 3-53 | 22 | (1) | 11.3066.0.000 | 3-27 | 09 | 4 | 11.5007.0.000 | 3-57 | 37 | 1 |
| 11.2089.0.000 | 3-53 | 26 | (1) | 11.3067.0.000 | 3-41 | 03 | (1) | 11.5008.0.000 | 3-3 | 27 | 1 |
| 11.2090.0.000 | 3-47 | 13 | 1 | 11.3070.0.000 | 3-41 | 02 | (1) | 11.5009.0.000 | 3-57 | 27 | 1 |
| 11.2251.0.000 | 3-45 | 16 | 1 | 11.3070.0.050 | 3-41 | 01 | 1 | 11.5011.0.000 | 3-57 | 43 | 1 |
| 11.2254.0.000 | 3-45 | 23 | 2 | 11.3079.0.000 | 3-25 | 21 | 1 | 11.5019.0.000 | 3-35 | 15 | 1 |
| 11.2255.0.000 | 3-45 | 02 | 1 | 11.3080.0.000 | 3-25 | 27 | 1 | 11.5021.0.000 | 3-57 | 02 | 1 |
| 11.2256.0.000 | 3-45 | 03 | 1 | 11.3081.0.000 | 3-29 | 22 | 1 | 11.5022.0.000 | 3-57 | 03 | 1 |
| 11.2262.0.000 | 3-45 | 15 | 1 | 11.3082.0.000 | 3-25 | 22 | 1 | 11.5031.0.000 | 3-57 | 22 | 1 |
| 11.2263.0.000 | 3-45 | 05 | 1 | 11.3083.0.000 | 3-29 | 24 | 1 | 11.5055.0.050 | 3-59 | 53 | 1 |
| 11.2263.0.901 | 3-45 | 06 | (1) | 11.3085.0.000 | 3-35 | 10 | 1 | | | | |
| | | | | 11.3087.0.000 | 3-35 | 18 | 1 | **12.0008.4.052** | | | |
| **11.3001.0.000** | | | | 11.3088.0.000 | 3-35 | 22 | 1 | 12.0008.4.052 | 3-57 | 47 | 1 |
| 11.3001.0.000 | 3-3 | 01 | 1 | 11.3101.0.000 | 3-25 | 19 | 1 | 12.0008.4.206 | 3-61 | 25 | 1 |
| 11.3001.0.902 | 3-3 | 02 | (3) | 11.3110.0.000 | 3-25 | 03 | 1 | 12.0008.4.285 | 3-61 | 26 | 1 |
| 11.3002.0.000 | 3-3 | 28 | 1 | 11.3123.0.000 | 3-25 | 11 | 1 | 12.0008.6.001 | 3-65 | 10 | 1 |
| 11.3004.0.000 | 3-17 | 02 | (1) | 11.3131.0.000 | 3-49 | 16 | (1) | 12.0008.6.005 | 3-65 | 09 | 1 |
| 11.3004.0.050 | 3-17 | 01 | 1 | 11.3205.0.000 | 3-35 | 13 | 1 | 12.0008.6.102 | 3-65 | 14 | 1 |
| 11.3005.0.000 | 3-51 | 07 | 2 | 11.3206.0.000 | 3-35 | 11 | 1 | 12.0008.6.109 | 3-65 | 13 | 1 |
| 11.3006.0.000 | 3-17 | 06 | (1) | 11.3251.0.000 | 3-37 | 05 | 1 | 12.0008.6.215 | 3-65 | 12 | 1 |
| 11.3006.0.050 | 3-17 | 05 | 1 | 11.3252.0.000 | 3-37 | 06 | 2 | 12.0008.6.901 | 3-61 | 18 | (1) |
| 11.3009.0.000 | 3-39 | 01 | 1 | 11.3253.0.000 | 3-37 | 04 | 1 | 12.0008.6.915 | 3-61 | 19 | (1) |
| 11.3015.0.000 | 3-39 | 02 | 1 | 11.3254.0.000 | 3-37 | 03 | 1 | 12.0008.6.968 | 3-65 | 01 | 1 |
| 11.3016.0.000 | 3-39 | 09 | 1 | 11.3255.0.000 | 3-37 | 01 | 1 | 12.0008.6.978 | 3-65 | 11 | 1 |

# INDEX


| PART NUMBER | PAGE | DET | QTY | PART NUMBER | PAGE | DET | QTY | PART NUMBER | PAGE | DET | QTY |
|---|---|---|---|---|---|---|---|---|---|---|---|
| 12.0010.4.141 | 3-61 | 27 | 1 | 14.1025.3.000 | 3-41 | 25 | 2 | **17.0013.1.045** | | | |
| 12.1010.0.206 | 3-11 | 13 | 1 | 14.1028.4.000 | 3-9 | 02 | (1) | 17.0013.1.045 | 3-51 | 18 | 4 |
| 12.1010.0.212 | 3-25 | 33 | 1 | 14.1029.0.000 | 3-19 | 11 | 1 | 17.0013.1.047 | 3-55 | 18 | 2 |
| 12.1010.0.308 | 3-35 | 14 | 1 | 14.1070.4.000 | 3-9 | 12 | (1) | 17.0013.1.171 | 3-57 | 16 | 1 |
| 12.1010.0.310 | 3-3 | 03 | (3) | 14.1099.0.000 | 3-31 | 10 | (1) | 17.0013.1.177 | 3-13 | 10 | 1 |
| 12.1010.0.310 | 3-29 | 27 | 2 | 14.1197.1.000 | 3-35 | 04 | 1 | 17.0013.1.417 | 3-31 | 20 | 1 |
| 12.1010.0.312 | 3-35 | 20 | 1 | 14.1250.0.000 | 3-9 | 28 | 2 | 17.0013.1.418 | 3-31 | 22 | 1 |
| 12.1010.0.314 | 3-3 | 16 | 1 | 14.2059.0.000 | 3-55 | 27 | 1 | 17.0013.1.419 | 3-31 | 16 | 1 |
| 12.1010.0.314 | 3-11 | 22 | 1 | 14.2060.0.000 | 3-55 | 28 | 1 | 17.0013.1.420 | 3-9 | 35 | (1) |
| 12.1010.0.320 | 3-3 | 08 | 2 | 14.3100.0.901 | 3-25 | 17 | 1 | 17.0013.2.086 | 3-15 | 08 | 1 |
| 12.1010.0.412 | 3-11 | 20 | 1 | 14.4023.3.050 | 3-9 | 07 | 1 | 17.0013.2.090 | 3-43 | 06 | 1 |
| 12.1010.0.516 | 3-27 | 06 | 1+(1) | 14.5034.0.000 | 3-31 | 13 | (1) | 17.0013.3.402 | 3-57 | 41 | 2 |
| 12.1010.0.520 | 3-5 | 19 | 1 | 15.4405.0.400 | 3-11 | 10 | 1 | 17.0013.5.067 | 3-55 | 14 | 2 |
| 12.1010.0.630 | 3-25 | 28 | 1 | | | | | 17.0013.5.069 | 3-51 | 20 | 2 |
| 12.1011.0.425 | 3-37 | 16 | 1 | **17.0002.7.589** | | | | 17.0013.6.081 | 3-35 | 05 | 1 |
| 12.1014.0.007 | 3-31 | 05 | (1) | 17.0002.7.589 | 3-27 | 10 | 1 | | | | |
| 12.1014.0.308 | 3-53 | 29 | (2) | 17.0003.6.156 | 3-61 | 31 | (1) | **17.0014.1.015** | | | |
| 12.1016.0.002 | 3-3 | 33 | 2 | 17.0004.3.485 | 3-57 | 12 | 1 | 17.0014.1.015 | 3-29 | 23 | 2 |
| 12.1016.0.002 | 3-11 | 27 | 1 | 17.0004.4.829 | 3-21 | 20 | 2 | 17.0014.1.068 | 3-29 | 18 | 1 |
| 12.1016.0.002 | 3-57 | 36 | 2 | 17.0004.5.386 | 3-25 | 05 | 1 | 17.0014.1.133 | 3-39 | 22 | (2) |
| 12.1040.1.007 | 3-5 | 18 | 1 | 17.0004.7.242 | 3-19 | 06 | 1 | 17.0014.1.205 | 3-31 | 02 | (1) |
| 12.1045.0.004 | 3-29 | 13 | (1) | 17.0004.7.253 | 3-5 | 16 | 1 | 17.0014.3.011 | 3-49 | 17 | (1) |
| 12.1045.1.010 | 3-25 | 35 | 1 | 17.0007.8.172 | 3-63 | 16 | 1 | 17.0014.4.001 | 3-31 | 21 | 1 |
| | | | | | | | | 17.0016.1.054 | 3-15 | 06 | (1) |
| **12.2010.0.009** | | | | **17.0011.1.148** | | | | 17.0016.1.093 | 3-21 | 46 | 1 |
| 12.2010..0009 | 3-63 | 08 | (2) | 17.0011.1.148 | 3-47 | 22 | 1 | 17.0016.1.118 | 3-11 | 26 | 1 |
| 12.2010.0.011 | 3-11 | 21 | 1 | 17.0011.2.014 | 3-25 | 12 | 1 | 17.0016.1.141 | 3-47 | 12 | 1 |
| 12.2010.1.001 | 3-9 | 16 | (1) | 17.0011.2.063 | 3-25 | 30 | 2 | 17.0016.1.191 | 3-11 | 25 | 2 |
| 12.2090.0.003 | 3-25 | 23 | 1 | 17.0011.2.063 | 3-41 | 26 | (1) | 17.0017.1.016 | 3-21 | 26 | 1 |
| 12.2099.1.006 | 3-5 | 17 | 5 | 17.0011.3.022 | 3-31 | 07 | (1) | 17.0017.2.049 | 3-11 | 18 | 1 |
| 12.2099.1.006 | 3-25 | 31 | 1 | 17.0011.8.041 | 3-21 | 28 | 1 | | | | |
| 12.4010.0.004 | 3-61 | 15 | (6) | | | | | **17.0019.0.228** | | | |
| 12.4021.0.312 | 3-19 | 12 | 1 | **17.0012.0.120** | | | | 17.0019.0.228 | 3-21 | 18 | 2 |
| 12.4030.0.545 | 3-5 | 20 | 1 | 17.0012.0.120 | 3-9 | 10 | (2) | 17.0019.0.230 | 3-29 | 19 | 2 |
| 12.5050.1.018 | 3-63 | 23 | 1 | 17.0012.0.254 | 3-53 | 08 | (2) | 17.0019.0.232 | 3-57 | 42 | 2 |
| 12.5050.1.020 | 3-63 | 22 | 1 | 17.0012.0.303 | 3-55 | 23 | 2 | 17.0019.0.237 | 3-5 | 26 | 1 |
| 12.8000.0.107 | 3-57 | 40 | 1 | 17.0012.0.404 | 3-21 | 13 | 2 | 17.0019.0.398 | 3-23 | 51 | 2 |
| 12.8000.0.409 | 3-41 | 27 | (1) | 17.0012.0.571 | 3-41 | 09 | (1) | 17.0019.0.441 | 3-61 | 14 | (8) |
| 12.8000.0.416 | 3-57 | 39 | 1 | 17.0012.0.571 | 3-41 | 18 | (1) | 17.0019.0.610 | 3-25 | 14 | 1 |
| 12.8000.1.001 | 3-57 | 34 | 1 | 17.0012.0.688 | 3-35 | 06 | 1 | 17.0019.0.662 | 3-11 | 24 | 1 |
| 12.8000.1.027 | 3-3 | 32 | 1 | 17.0012.1.140 | 3-21 | 15 | 2 | 17.0019.1.062 | 3-9 | 26 | (2) |
| | | | | 17.0012.1.142 | 3-21 | 19 | 2 | 17.0019.1.088 | 3-21 | 21 | 2 |
| **13.2087.1.000** | | | | 17.0012.1.148 | 3-49 | 09 | (1) | 17.0019.2.021 | 3-27 | 14 | 2 |
| 13.2087.1.000 | 3-53 | 41 | 1 | 17.0012.1.169 | 3-11 | 03 | (1) | 17.0019.2.066 | 3-55 | 16 | 2 |
| 13.3083.0.000 | 3-3 | 10 | 1 | 17.0012.1.172 | 3-5 | 10 | 1 | 17.0019.5.040 | 3-55 | 15 | 2 |
| | | | | 17.0012.2.400 | 3-21 | 38 | 1 | 17.0021.1.045 | 3-5 | 07 | 1 |
| **14.1015.0.000** | | | | 17.0012.4.011 | 3-31 | 17 | 1 | 17.0021.1.050 | 3-53 | 18 | (1) |
| 14.1015.0.000 | 3-19 | 07 | 1 | 17.0012.4.042 | 3-35 | 08 | 1 | 17.0021.1.073 | 3-41 | 10 | 1 |
| 14.1022.3.000 | 3-9 | 19 | (2) | 17.0012.4.106 | 3-55 | 29 | 2 | 17.0021.1.201 | 3-63 | 04 | (1) |
| 14.1025.3.000 | 3-9 | 20 | (2) | | | | | 17.0021.1.202 | 3-63 | 06 | (1) |




**e-mail: service@amfreece.cz; parts@amfreece.cz; website: www.amfreece.com**
**Phone: +420 582 309 286; Fax: +420 582 360 606**

# INDEX

| PART NUMBER | PAGE | DET | QTY |
|---|---|---|---|
| **17.0026.0.213** | | | |
| 17.0026.0.213 | 3-25 | 32 | 1 |
| 17.0026.0.221 | 3-5 | 15 | 1 |
| 17.0026.1.082 | 3-41 | 33 | (1) |
| 17.0026.2.077 | 3-9 | 24 | (1) |
| 17.0026.2.078 | 3-21 | 42 | 1 |
| 17.0026.3.014 | 3-57 | 35 | 1 |
| 17.0026.3.126 | 3-31 | 29 | 1 |
| 17.0026.4.035 | 3-21 | 43 | 1 |
| 17.0026.4.036 | 3-31 | 28 | 1 |
| 17.0027.1.223 | 3-65 | 03 | 1 |
| 17.0027.1.419 | 3-9 | 30 | 1 |
| 17.0027.1.799 | 3-49 | 10 | (1) |
| 17.0027.4.045 | 3-21 | 50 | 1 |
| 17.0027.4.084 | 3-9 | 17 | (1) |
| 17.0027.4.085 | 3-37 | 02 | 1 |
| **17.0031.0.405** | | | |
| 17.0031.0.405 | 3-41 | 14 | (1) |
| 17.0031.0.406 | 3-21 | 47 | 1 |
| 17.0031.1.089 | 3-15 | 10 | 1 |
| 17.0031.4.030 | 3-53 | 39 | 1 |
| 17.0032.0.193 | 3-57 | 07 | 1 |
| 17.0033.1.010 | 3-47 | 09 | 1 |
| 17.0033.1.011 | 3-17 | 21 | 1 |
| 17.0033.1.011 | 3-49 | 20 | (1) |
| 17.0033.1.061 | 3-5 | 08 | 1 |
| 17.0033.1.109 | 3-11 | 09 | 1 |
| 17.0033.1.153 | 3-39 | 17 | 1 |
| 17.0033.2.030 | 3-47 | 15 | 1 |
| 17.0033.2.133 | 3-57 | 06 | 1 |
| 17.0033.3.053 | 3-31 | 14 | 1 |
| 17.0033.3.131 | 3-17 | 07 | (2) |
| 17.0033.3.132 | 3-39 | 07 | 1 |
| 17.0033.3.133 | 3-53 | 15 | (1) |
| 17.0033.3.134 | 3-49 | 11 | (1) |
| 17.0033.5.052 | 3-53 | 32 | 1 |
| 17.0033.5.113 | 3-25 | 09 | (1) |
| 17.0034.0.400 | 3-63 | 03 | (1) |
| 17.0034.2.324 | 3-53 | 02 | (1) |
| **17.0041.1.094** | | | |
| 17.0041.1.094 | 3-21 | 16 | 4 |
| 17.0041.8.005 | 3-55 | 17 | 2 |
| 17.0041.8.008 | 3-29 | 09 | (1) |
| 17.0041.8.008 | 3-31 | 06 | 1 |
| 17.0041.8.067 | 3-51 | 11 | 1 |
| 17.0041.8.181 | 3-39 | 13 | 1 |
| 17.0041.8.181 | 3-49 | 28 | (1) |
| 17.0042.1.283 | 3-9 | 14 | (1) |
| 17.0043.6.018 | 3-39 | 11 | 1 |
| 17.0043.6.277 | 3-9 | 09 | 2 |
| 17.0044.2.232 | 3-5 | 12 | 1 |
| 17.0044.2.234 | 3-5 | 14 | 1 |
| 17.0044.2.430 | 3-5 | 09 | 1 |
| 17.0044.5114 | 3-25 | 07 | (1) |
| 17.0045.1.099 | 3-11 | 08 | 1 |
| 17.0045.9.018 | 3-5 | 13 | 1 |
| **17.0051.0.401** | | | |
| 17.0051.0.401 | 3-63 | 05 | (1) |
| 17.0051.0.403 | 3-63 | 12 | (1) |
| 17.0052.0.315 | 3-25 | 06 | (1) |
| 17.0055.1.158 | 3-21 | 44 | 1 |
| 17.0055.3.025 | 3-39 | 03 | 1 |
| 17.0055.4.402 | 3-63 | 07 | (1) |
| 17.0055.4.404 | 3-63 | 17 | 1 |
| **17.0061.5.027** | | | |
| 17.0061.5.027 | 3-53 | 33 | 1 |
| 17.0062.5.015 | 3-47 | 14 | 1 |
| 17.0062.5.020 | 3-33 | 02 | 1 |
| 17.0062.5.144 | 3-49 | 07 | (1) |
| 17.0063.6.044 | 3-39 | 08 | 1 |
| 17.0063.6.068 | 3-5 | 11 | 1 |
| 17.0063.6.220 | 3-41 | 15 | (1) |
| 17.0063.6.308 | 3-39 | 06 | 1 |
| 17.0064.5.174 | 3-31 | 26 | 1 |
| 17.0064.6.117 | 3-21 | 23 | 1 |
| 17.0064.6.416 | 3-41 | 07 | (1) |
| 17.0064.7.162 | 3-21 | 30 | 1 |
| 17.0067.2.411 | 3-5 | 06 | 1 |
| 17.0074.4.405 | 3-21 | 22 | 1 |
| **17.0081.5.047** | | | |
| 17.0081.5.047 | 3-45 | 26 | 1 |
| 17.0081.5.082 | 3-21 | 33 | 1 |
| 17.0082.2.054 | 3-51 | 19 | 2 |
| 17.0082.5.108 | 3-41 | 29 | (1) |
| 17.0082.5.884 | 3-55 | 24 | 1 |
| 17.0082.5.997 | 3-41 | 08 | (1) |
| 17.0082.5.997 | 3-41 | 17 | (1) |
| 17.0082.6.000 | 3-19 | 13 | 2 |
| 17.0082.8.017 | 3-9 | 34 | (2) |
| 17.0082.8.084 | 3-21 | 27 | 2 |
| 17.0083.6.357 | 3-61 | 24 | 1 |
| 17.0087.0.169 | 3-55 | 25 | 1 |
| 17.0094.0.200 | 3-61 | 16 | (4) |
| 17.0094.1.143 | 3-25 | 13 | 1 |
| 17.0094.3.142 | 3-25 | 37 | 1 |
| 17.0094.5.309 | 3-49 | 04 | (1) |
| 17.0095.1.272 | 3-61 | 23 | (4) |
| 17.0095.1.329 | 3-19 | 01 | 1 |
| 17.0097.5.174 | 3-57 | 23 | 2 |
| **18.0011.2.400** | | | |
| 18.0011.2.400 | 3-9 | 22 | (2) |
| 18.0026.0.601 | 3-27 | 22 | 1 |
| 18.0043.6.284 | 3-35 | 16 | 1 |
| 18.0095.1.402 | 3-63 | 15 | (4) |
| 19.0002.4.409 | 3-9 | 13 | 1 |
| 19.0005.0.015 | 3-61 | 05 | (1) |
| 19.0005.0.016 | 3-61 | 06 | (1) |
| 19.0011.1.401 | 3-9 | 25 | (1) |
| 19.0011.1.402 | 3-13 | 16 | 1 |
| 19.0016.1.402 | 3-51 | 16 | 4 |
| 19.0017.2.402 | 3-57 | 21 | 1 |
| 19.0031.3.405 | 3-57 | 08 | 2 |
| 19.0032.6.400 | 3-7 | 04 | 1 |
| 19.0032.6.401 | 3-17 | 20 | 1 |
| 19.0032.8.401 | 3-55 | 06 | 2 |
| 19.0034.6.402 | 3-21 | 32 | 2 |
| 19.0041.0.692 | 3-9 | 31 | 1 |
| 19.0041.2.404 | 3-21 | 49 | 1 |
| 19.0041.2.412 | 3-7 | 02 | (1) |
| 19.0041.6.402 | 3-7 | 05 | 1 |
| 19.0043.6.441 | 3-23 | 52 | 1 |
| 19.0044.5.407 | 3-9 | 15 | (1) |
| 19.0045.3.402 | 3-9 | 05 | 2 |
| 19.0063.1.073 | 3-21 | 17 | 1 |
| 19.0063.3.403 | 3-57 | 17 | 1 |
| 19.0063.4.400 | 3-11 | 06 | (1) |
| 19.0066.7.420 | 3-55 | 13 | 1 |
| 19.0066.7.421 | 3-55 | 12 | 1 |
| 19.0067.2.415 | 3-11 | 19 | 1 |
| 19.0094.2.409 | 3-3 | 09 | 1 |
| 19.0094.5.409 | 3-3 | 30 | 1 |
| 19.0094.5.413 | 3-57 | 31 | 1 |
| 19.0095.1.405 | 3-57 | 38 | 1 |
| 19.0095.1.405 | 3-61 | 07 | (4) |
| 19.0095.1.408 | 3-57 | 13 | 1 |
| **22.0046.0.000** | | | |
| 22.0046.0.000 | 3-57 | 44 | 2 |
| 22.0104.0.000 | 3-19 | 02 | 1 |
| 22.0218.0.000 | 3-61 | 08 | (1) |
| 22.0229.0.000 | 3-19 | 03 | 1 |
| 24.0002.0.000 | 3-5 | 25 | 1 |


e-mail: service@amfreece.cz; parts@amfreece.cz; website: www.amfreece.com
Phone: +420 582 309 286; Fax: +420 582 360 606

# INDEX