AMF® REECE

Better Ideas, Better Made

MODEL S-105

MECHANICAL EYELET BUTTONHOLE MACHINE

PARTS AND SERVICE MANUAL

MACHINE SERIAL No.

PART NUMBER 97. 1100.0.002

This manual is valid for the machine serial No.: N150029 and from the N150037

AMF is trademark of AMF Group, Inc.

11/2011

AMF® REECE
Better Ideas, Better Made

LIMITED WARRANTY ON NEW AMF REECE EQUIPMENT

Warranty provisions:

A ninety (90) day limited service labor warranty to correct defects in installation, workmanship, or material without charge for labor. This portion of the warranty applies to machines sold as "installed" only.

A one (1) year limited material warranty on major component parts to replace materials with defects. Any new part believed defective must be returned freight prepaid to AMF Reece, Inc. for inspection. If, upon inspection, the part or material is determined to be defective, AMF Reece, Inc. will replace it without charge to the customer for parts or material.

Service labor warranty period shall begin on the completed installation date. Material warranty shall begin on the date the equipment is shipped from AMF Reece, Inc.

Exclusions:

Excluded from both service labor warranty and material warranty are: (1) Consumable parts which would be normally considered replaceable in day-to-day operations. These include parts such as needles, knives, loopers and spreaders. (2) Normal adjustment and routine maintenance. This is the sole responsibility of the customer. (3) Cleaning and lubrication of equipment. (4) Parts found to be altered, broken or damaged due to neglect or improper installation or application. (5) Damage caused by the use of non-Genuine AMF Reece parts. (6) Shipping or delivery charges.

There is no service labor warranty for machines sold as "uninstalled".

Equipment installed without the assistance of a certified technician (either an AMF Reece Employee, a Certified Contractor, or that of an Authorized Distributor) will have the limited material warranty only. Only the defective material will be covered. Any charges associated with the use of an AMF Reece Technician or that of a Distributor to replace the defective part will be the customer's responsibility.

NO OTHER WARRANTY, EXPRESS OR IMPLIED, AS TO DESCRIPTION, QUALITY, MERCHANTABILITY, and FITNESS FOR A PARTICULAR PURPOSE, OR ANY OTHER MATTER IS GIVEN BY SELLER OR SELLER'S AGENT IN CONNECTION HEREWITH. UNDER NO CIRCUMSTANCES SHALL SELLER OR SELLER'S AGENT BE LIABLE FOR LOSS OF PROFITS OR ANY OTHER DIRECT OR INDIRECT COSTS, EXPENSES, LOSSES OR DAMAGES ARISING OUT OF DEFECTS IN OR FAILURE OF THE EQUIPMENT OR ANY PART THEREOF.

WHAT TO DO IF THERE IS A QUESTION REGARDING WARRANTY

If a machine is purchased through an authorized AMF Reece, Inc. distributor, warranty questions should be first directed to that distributor. However, the satisfaction and goodwill of our customers are of primary concern to AMF Reece, Inc. In the event that a warranty matter is not handled to your satisfaction, please contact the appropriate AMF Reece office:

Europe
Prostejov, Czech Republic
Phone: (+420) 582-309-286
Fax: (+420) 582-360-608
e-mail: service@amfreece.cz

AMF® REECE
Better Ideas, Better Made

Warranty Registration Card

(Please Fax or Mail immediately after installation)

Note: All Warranty Claims Void, unless Registration Card on file at AMF Reece HQ

Machine model number:
(S100, S101, S104, S105, S 311, Deco, S4000 , EBS Mark II, ES505, etc)

Manufacturer‘s serial or production number:

Installation Site Information:

Customer‘s Name:

Customer‘s Mailing Address:

Customer‘s Telephone Number:

Supervising Mechanic‘s or Technician‘s Name:

Signature of Supervising Technician:

AMF Reece Technician‘s Name:

AMF Reece Technician‘s Signature:

Type of garment produced at this location?

Average Daily Production Expected from this machine?
(number of buttonholes, jackets sewn, pants produced, buttons sewn, etc)

Any special requirements required at this location?

What other AMF Reece Machines are at this location?

How can we serve you better?

Tovární 837, 798 11 Prostejov, Czech Republic
Fax: +420 582 360 606, e-mail: service@amfreece.cz, website: www.amfreece.com

TABLE OF CONTENTS

A - INTRODUCTION
1. General information 1-1
2. Terminology of machine parts and safety labels on the machine 1-2
3. Technical conditions 1-4
4. Terminology of buttonhole parts 1-5
5. Coloured markings 1-6
6. Safety instructions for operators and servicemen 1-6
7. Special equipment 1-8

B - MACHINE INSTALATION
1. Contents of consignment 1-9
2. Table instalation 1-9
3. Thread stand instalation 1-10
4. Connecting machine with distribution of electricity 1-11
5. Adjustment of left drive belt 1-12
6. Adjustment of right drive belt 1-13

C - CORRECT USAGE
1. Sewing of buttonhole 1-14
2. Needle exchange 1-15
3. Threading of machine 1-15
4. Principles of sewing 1-19
5. Machine description and its functions 1-20
6. Changing seaming width 1-20
7. Stitch density adjustment 1-21
8. Stitching lenght and flybar adjustment 1-22
9. Changing the position of stitch rows - gaps for cut 1-23
10. Setting the spread of the clapm feet 1-23

D - MACHINE ADJUSTMENT
1. Table adjustment 1-25
2. Stopping mechanism 1-26
3. Brake adjustment 1-28
4. Needle bar and race alignment 1-29
5. Buttonhole shape adjustment 1-30
6. Needle bar height 1-31
7. Loopers adjustment 1-32
8. Spreaders adjustment 1-34
9. Upper thread trimming 1-35
10. Upper thread tension 1-36
11. Sewing switch lewer 1-37
12. Cutting mechanism adjustment 1-38
13. Adjustment of clamping mechanism 1-40

E - MAINTENANCE
1. Machine cleansing and maintenance 1-42
2. Summary of maintenance 1-43
3. Machine lubrication 1-44
4. Disposal provisions 1-46

TABLE OF CONTENTS

A - INTRODUCTION

1. GENERAL INFORMATION

S-105 sewing machine is intended for sewing buttonholes on outwear. It has been designed and manufactured to be reliable and easy to operate. Special attention is paid to ensure ease and effective safety for machine operators and servicemen.

Safety mechanisms protect both, operators and the machine, and respect valid safety and hygiene provisions for usual technological usage of the machine. Those safety mechanisms contain electrical plug, operation switch (circuit breaker) and covers ensuring safety operation on the machines; only if they are fitted onto the machine correctly.
There are information labels on the machine to point out additional danger. Do not remove or damage those labels. In case of damage, order a new one. Mentioned warnings cannot cover all safety aspects and therefore it is very important for an operator to read this manual carefully and understand it well before he starts operating the machine. It will also eliminate errors during machine installation and its operation. Do not put the machine into operation unless you have read entire manuals supplied with the machine and have understood each function and procedure.

There are four categories of safety instructions in this manual:

DANGER! Ignoring instructions may endanger operator's life.

CAUTION! Ignoring instructions may cause a serious injury of the operator or damage the machine.

WARNING! Ignoring instructions may cause damage on the machine or injury of the operator.

NOTICE! Breaking procedures may cause functional problems of the machine.

We recommend that servicemen from AMF Reece supervise the installation of the machines and initial training of your mechanics and operators.
The most effective method ensuring safety of operators working on the machine is a strict safety program including instructions for safety operation. Operators and servicemen should wear safety glasses.

A - INTRODUCTION

2. TERMINOLOGY OF MACHINE PARTS AND SAFETY LABELS ON THE MACHINE

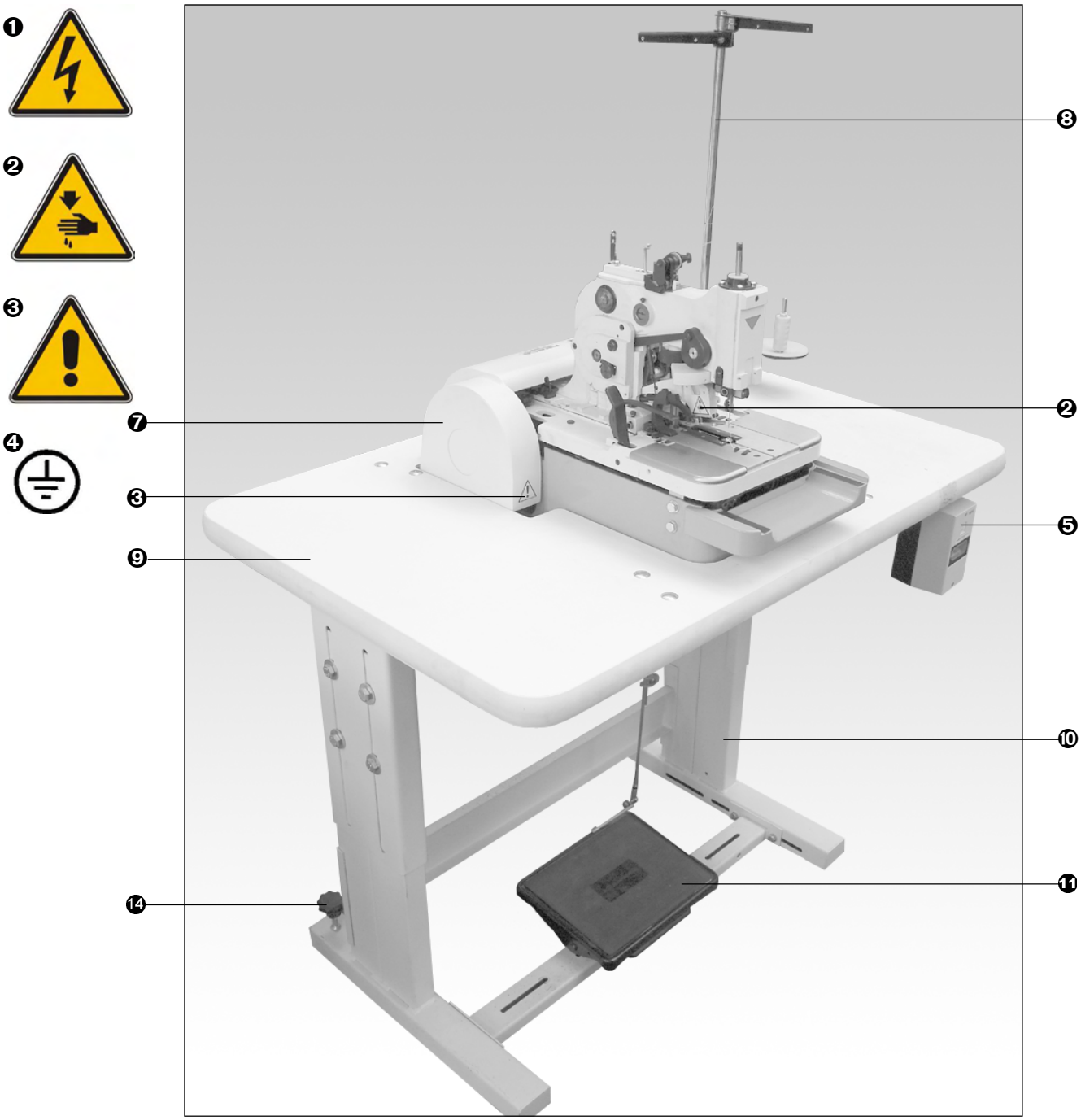

❶ Caution when removing cover, shock hazard
❷ Accident hazard
❸ Caution when removing cover, chance of injury
❹ Grounding
❺ Switch
❻ Needle bar cover

Released 01/2010
E-mail: service@amfreece.cz; parts@amfreece.cz; website: www.amfreece.com
Phones: +420 582 309 146 (Service), +420 582 309 286 (Spare Parts); Fax: +420 582 360 606

A - INTRODUCTION

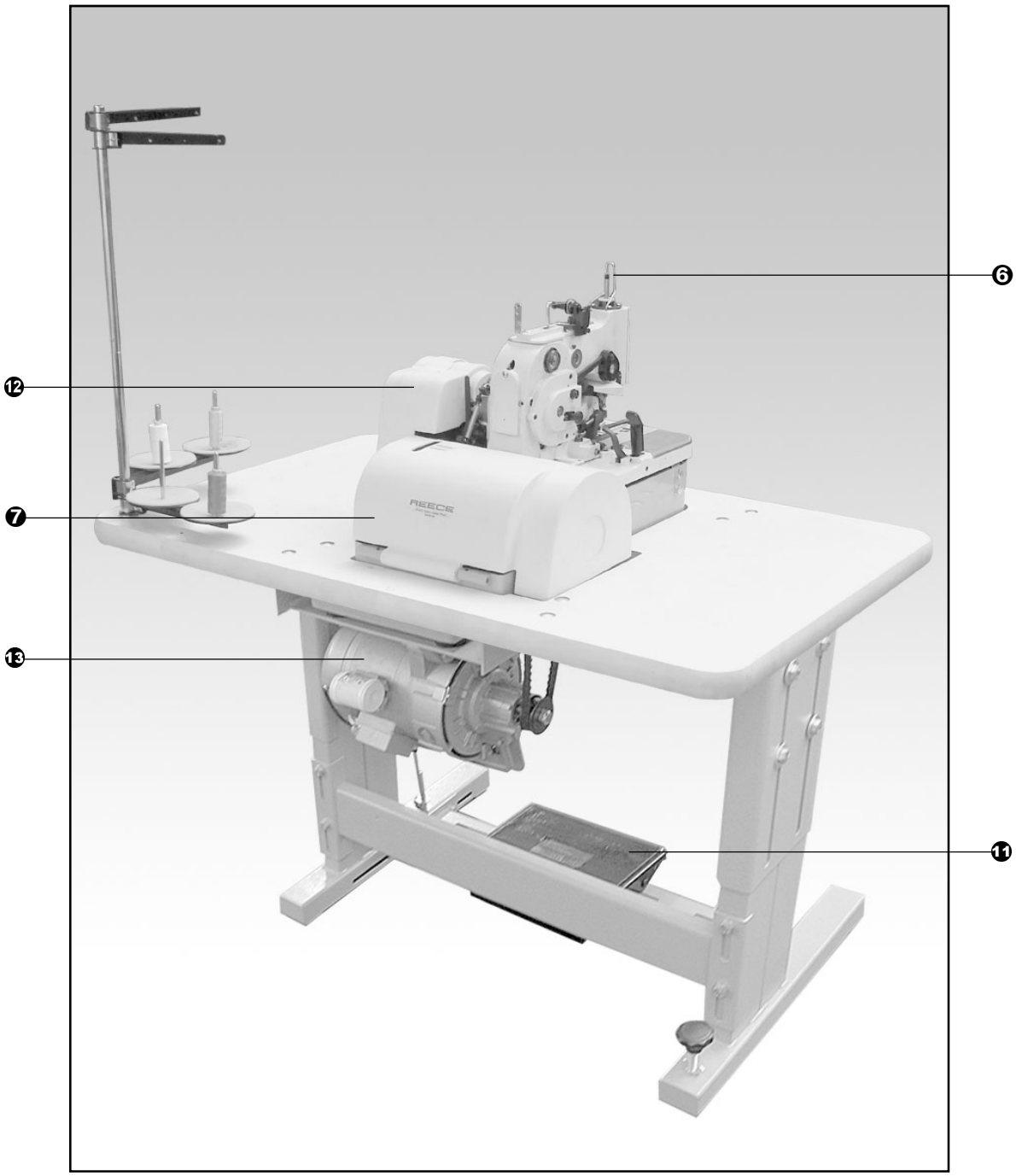

❼ Rear removable cover
❽ Thread stand
❾ Table
❿ Stand
⓫ Foot pedal
⓬ Driver belt cover
⓭ Motor
⓮ Hand screw

3. TECHNICAL CONDITIONS

S-105 Mechanical eyelet buttonhole machine with chain stitch can be used on men and ladies' garments. Gimp can be also used.

With a simple change, the following types of buttonholes can be sewn:

- flybar
- with eye
- without eye

- without bar
- with eye
- without eye

Description	Parameters
Sewing speed	Up to 1800 spm
Stitch type	401 two thread chainstitch
Buttonhole lenght 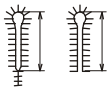	12 - 38 mm
Stitch density	6 - 16 st/cm
Number of stitches in the eye	4 to 12
Stitch bite	1,8 to 3 mm
Buttonhole style	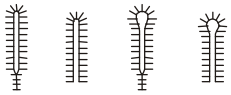
Buttonhole type 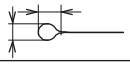	Without eye; 2,8 x 4,2 mm / 3,4 x 4,2 mm
Flybar lenght	3,0 to 7,0 mm
Maximum clamp height	10 mm
Maximum work thickness	to 6 mm
Buttonhole cutting mode	cut before (CB), cut after (CA)
Cutting space	- 0,50 to + 0,5 mm
Bedplate movement	40 mm
Needle system	02.0558.0.111 (Nm 90, 100, 110)
Recomended thread*	80, 100, 120, gimp 30.
Upper thread trimming ✂	Yes
Operating condition	According to IEC 364-3, IEC 364-5-51 temperature from +5℃ to 40℃, relative air humidity from 30 to 8 0%
Machine db level	Max. 80 dB/ stoping 82 dB
Machine head dimension	510 mm (height) x 420 mm (width) x 620 mm (depth)
Machine head weight	57 kg
Table dimension	750 mm (height) x 1100 mm (width) x 700 mm (depth) + 150 mm distance
Machine weight	130 kg
Electrical requirements Line circuit breaker	3F+N+PE - 50Hz 400V/TN-S Min. 10A Characteristic C (EN60947-2)

NOTICE: If you use threads 100 thick or less, the manufacturer recommend using the left looper order number 11.4005.0.005

A - INTRODUCTION

4. TERMINOLOGY OF BUTTONHOLE PARTS

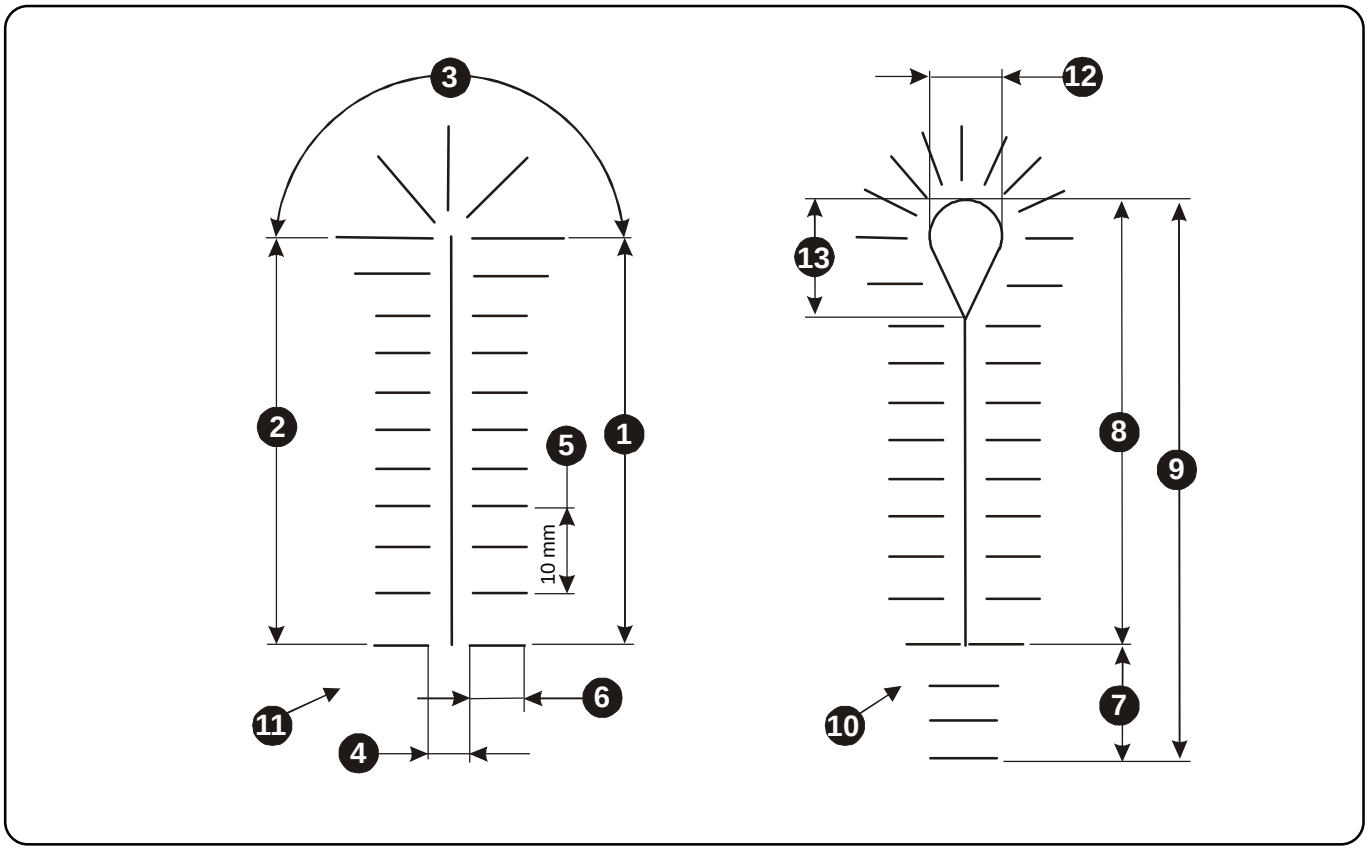

1. First row of stitches
2. Second row of stitches
3. Density in the eye
4. Shear gap
5. Stitch density is the number of stitches in 1 cm
   The bigger density, the better quality look of the buttonhole
6. Bite (the width of outseaming) – the width of side stitches
7. Lengthwise pre-sewing
8. Length of cut. Material can be cut before sewing (CB) or after sewing (CA) the buttonhole. Cut before (CB) can be used on firm thick materials only
9. Total buttonhole length
10. Flybar (AF)
11. Open end
12. Eye width
13. Eye length

5. COLOURED MARKING

Screw - top links: ***Yellow marks*** — 1. Loosing and following disassembly of this link causes distinctive intervention to the mechanism adjustment, was done when assembled and sewed off at the that factory.

2. After such an intervention to the mechanism, new adjustment of set mechanism needs to be done and complete check of whole machine adjustment as well.

Blue marks — Screws and nuts secured against loosing with glue „LOCTITE“.

Lubrication locations: ***Red marks*** — ***CAUTION:*** *Lubrication regime adherance is necessary for protection of the reliable long-term machine operation.*

6. SAFETY INSTRUCTIONS FOR OPERATORS AND SERVICEMEN

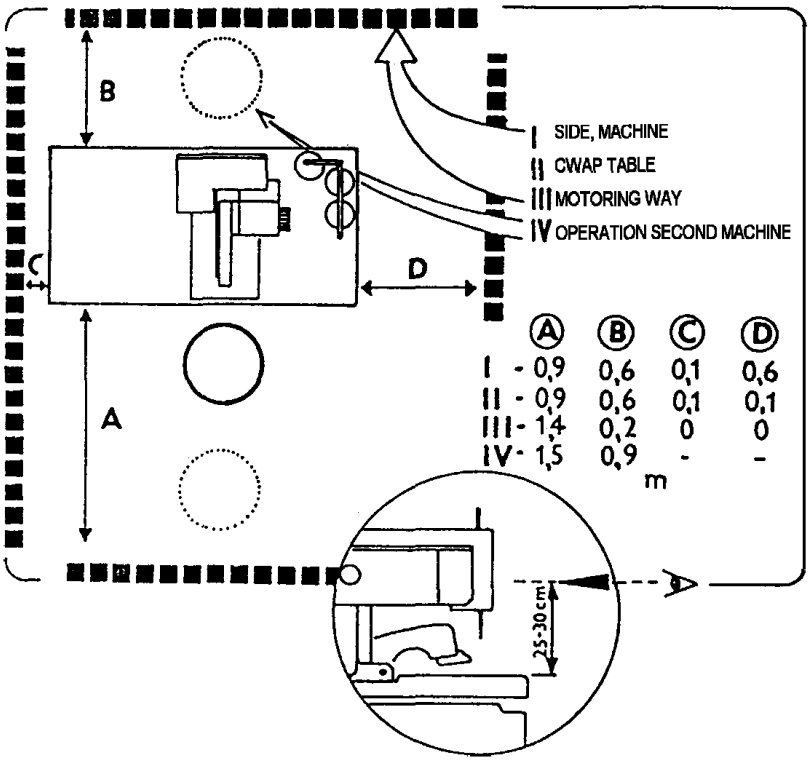

When positioning the machine onto its operational place, we recommend keeping the minimal distance of the machine as in the drawing. Follow the instructions below. Do not start the machine unless you have carefully read the operator's manual.

Released 01/2010
E-mail: service@amfreece.cz; parts@amfreece.cz; website: www.amfreece.com
Phones: +420 582 309 146 (Service), +420 582 309 286 (Spare Parts); Fax: +420 582 360 606

A - INTRODUCTION

DANGER!

- Before connecting the machine with the power, make sure all covers are mantled onto the machine.
- If any of the safety covers needs to be dismantled, turn the main switch off, and possibly unplug the power from the socket.
- Do not connect the machine with the power if any of the covers is dismantled.
- Once the machine is connected with the power, check the rotation of the pulley.

CAUTION!

- Remember the position of the switch so that you can use it from any position.
- Make sure that the power, its dimension and circuit breaker provides constant power supply to ensure reliable performance of the machine.
- Check that none of the cables is damaged in order to prevent accident injury from happening by touching them.
- Damaged covers must be immediately repaired or replaced with new ones.
- Never touch rotating parts.
- Never put fingers into the sewing area.
- Turn the main switch off before you change a needle.
- Unplug the power cord from the socket before you clean or maintain the machine.
- If you do not work on the machine, disconnect the power with the main switch.
- Do not make any modifications in the machine that would endanger its safety.
- Be aware that every machine part can become dangerous if they are not handled or serviced the right way. It is important that everybody working with the machine – operate it or do the maintenance on it – gets acquainted with information in this instruction book and in the spare parts manual.

WARNING!

- Keep maintaining the machine regularly as described in the manual.
- If the power is cut off, turn the main switch off.
- Do not paint, do not damage, do not remove or change the safety labels. Keep them clean. If they are not legible or you loose them, order new ones at our company and place it onto their original location.
- Bind your long hair – it can be caught and winded by the driving mechanism.
- Buttons (hooks) on your sleeves must be buttoned up so that loose parts of your outfit are not winded into the driving mechanism.
- Do not work onto the machine impaired or intoxicated.
- If you are unsure of the operation process, call up a serviceman.
- The machine user must provide for illuminating the working area – minimum 750 Lux.

A - INTRODUCTION

7. SPECIAL EQUIPMENT

7.1. Work light ❶

- standard light can be ordered additionally, order number 12.0008.4.875

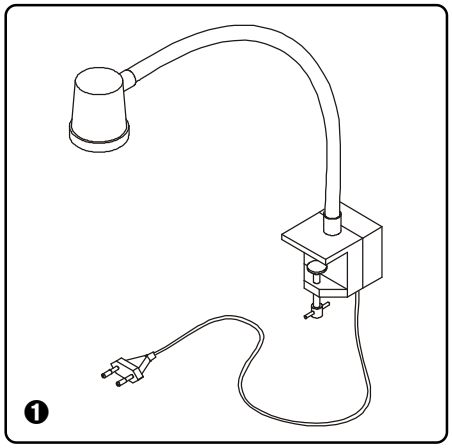

7.2. Securing device for clamp plates used for thin fabrics ❷

- 08.6200.3.006 (2x) + 14.2214.0.000 (2x) + 14.2213.0.000 (2x)
- 01.5457.0.000 (2x) + 17.0063.5.245 (2x) + 08.6010.3.006 (2x)

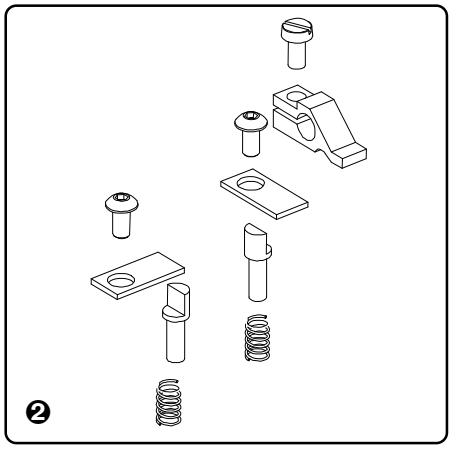

7.3. Holder to sew pockets

- 11.1252.0.000

7.4. Set up gauge ❸

- 03.0279.1.000

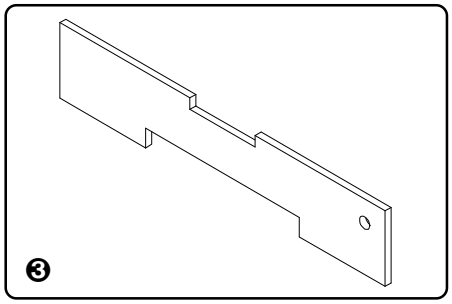

7.5. Buttonhole distance kit ❹

- 03.5511.0.003

7.6. Loopers

-11.4005.0.001 - for single thread stitch
-11.5005.0.005 - for sewing thin threads

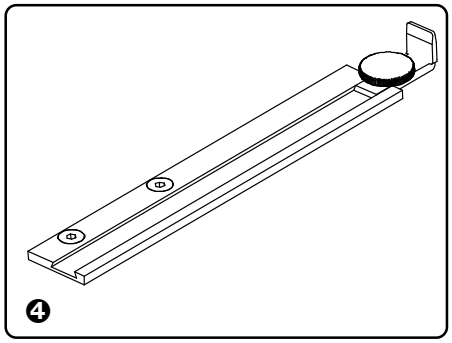

Revised 11/2011
E-mail: service@amfreece.cz; parts@amfreece.cz; website: www.amfreece.com
Phone: +420 582 309 286; Fax: +420 582 360 606

B - MACHINE INSTALLATION

1. CONTENT OF CONSIGNMENT

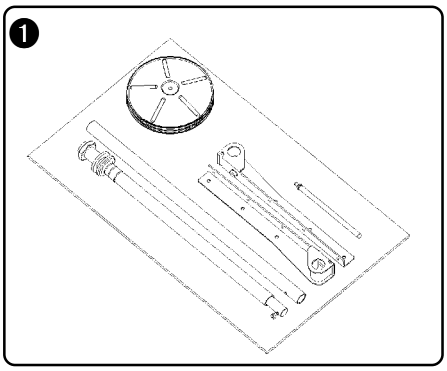

1.1. If not stated otherwise, the consignment contains the following:
- machine with electro installations already built onto the stand
- cardboard with accessories
(specification in the Spare Parts section)
- thread stand dismantled ❶
- operator's manual with Spare parts list

1.2. When unpacking the machine, it is necessary to follow marks placed on the wrapping.

WARNING: Visible damaged of the consignment that happened during the shipment must be immediately reported to the carrier. Check the content of the consignment with the order. Possible impediments must be immediately reported to the manufacturer. Later claims cannot be acknowledged!

2. TABLE INSTALLATION

2.1. Once you unpack the machine, install it onto its intended place. The machine is supplied with a table of a standard high to work on it while seated. If you require a different table, discuss it with the machine manufacturer. The recommended height of the table is 870 mm measured from the floor. The height can be adjusted by lifting up the desk once you loose the screws ❺. Tighten the screws firmly after the adjustment.

2.2. The stability is secured with the rear support ❷, that is operated with a hand screw ❸. Check the desk level.

2.3. Remove the secure belt ❹ preventing the machine head to tip out from the frame. When transporting the machine, fasten the table so that it does not move.

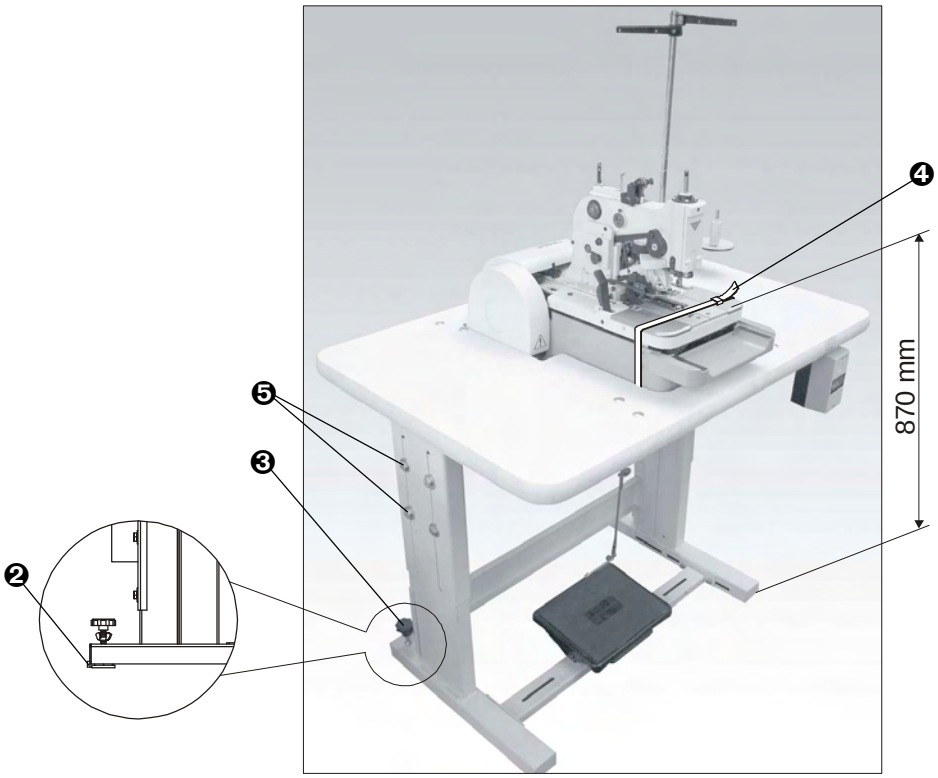

B - MACHINE INSTALLATION

3. THREAD STAND INSTALLATION

3.1. Put the thread stad together according to the drawing

3.2. Position of the locking ring ❶ allows assembly of the thread stand for various thicknes of table top. Threaded end of the post ❻ must not extend more than 1 mm (1/32“) through the locking nut ❺

3.3. Insert the washer ❷ and the post into the hole provided in the right rear of the table top ❸. Insert the washer ❹ and tighten the nut ❺.

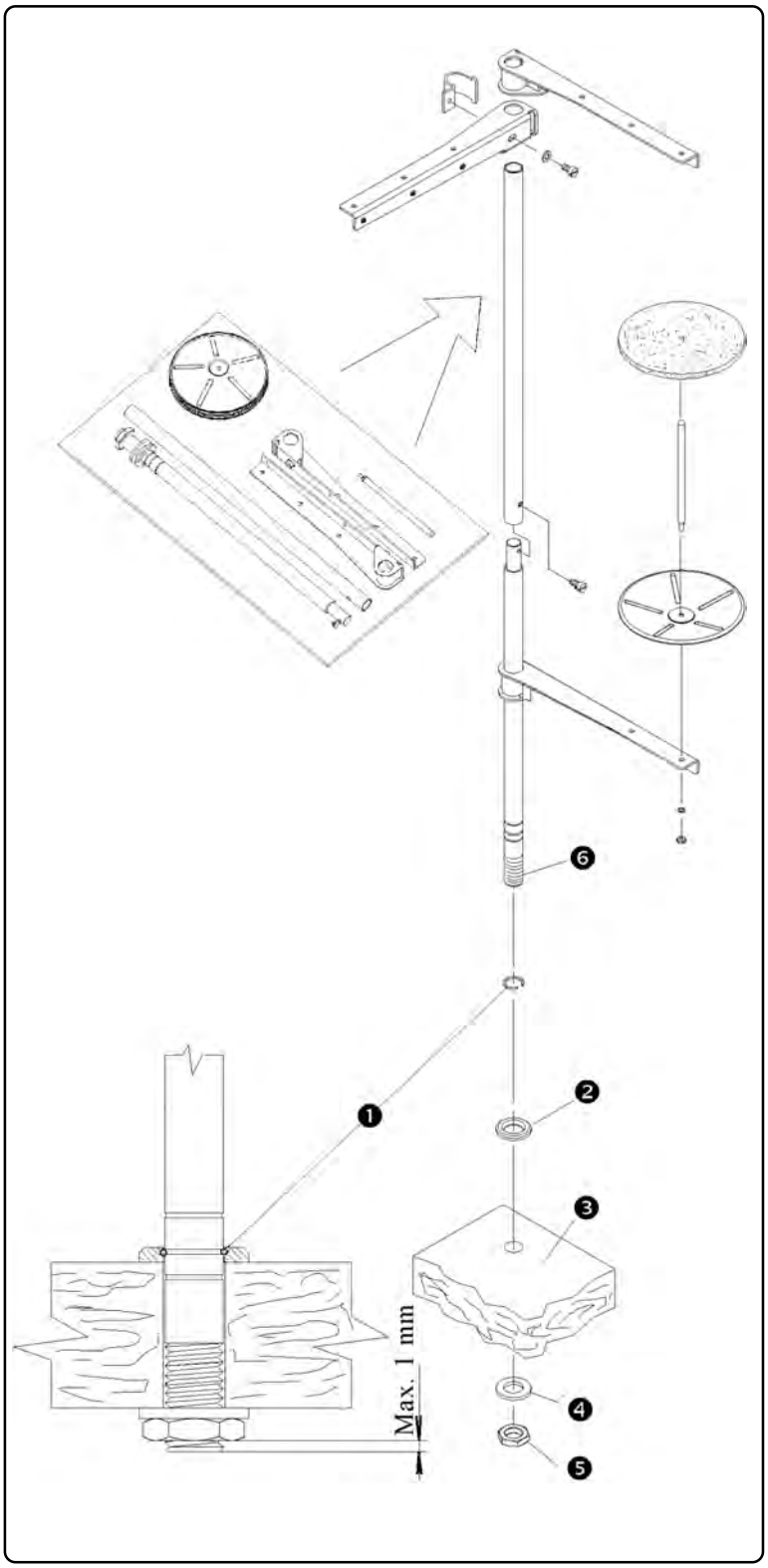

4. CONNECTING MACHINE WITH DISTRIBUTION OF ELECTRICITY

4.1. No other appliances can be connected to the circuit protecting the power point. The pulley placed under the rear removable cover must turn clockwise when connected to the power point, when the switch turned on and when the foot pedal pressed down.

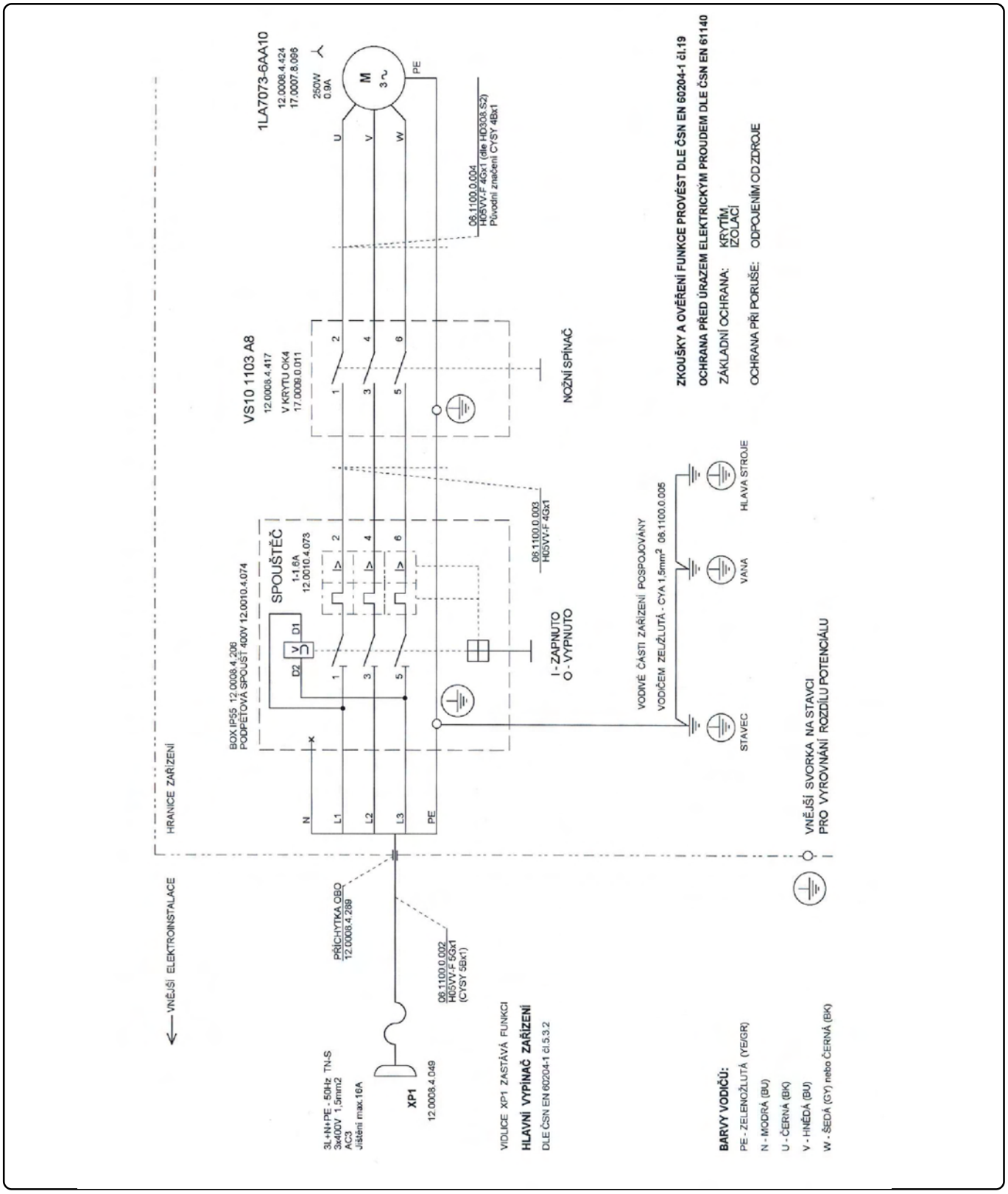

5. ADJUSTMENT OF LEFT DRIVE BELT

To get access to the belt tilt the rare cover ❶. Loose the nut ❷ and adjust the gear shaft ❸ so that the motor drive belt ❹ is tensed. Tighten the gear shaft ❸. By loosing the screws ❺ adjust the tension pulley ❻ so that, the movement of the front part of the pulley ❼ is13 mm (1/2”) when pushing on it, as shown in the picture below. Tighten the tension pulley screws ❺. Place the cover ❶ back onto the machine.

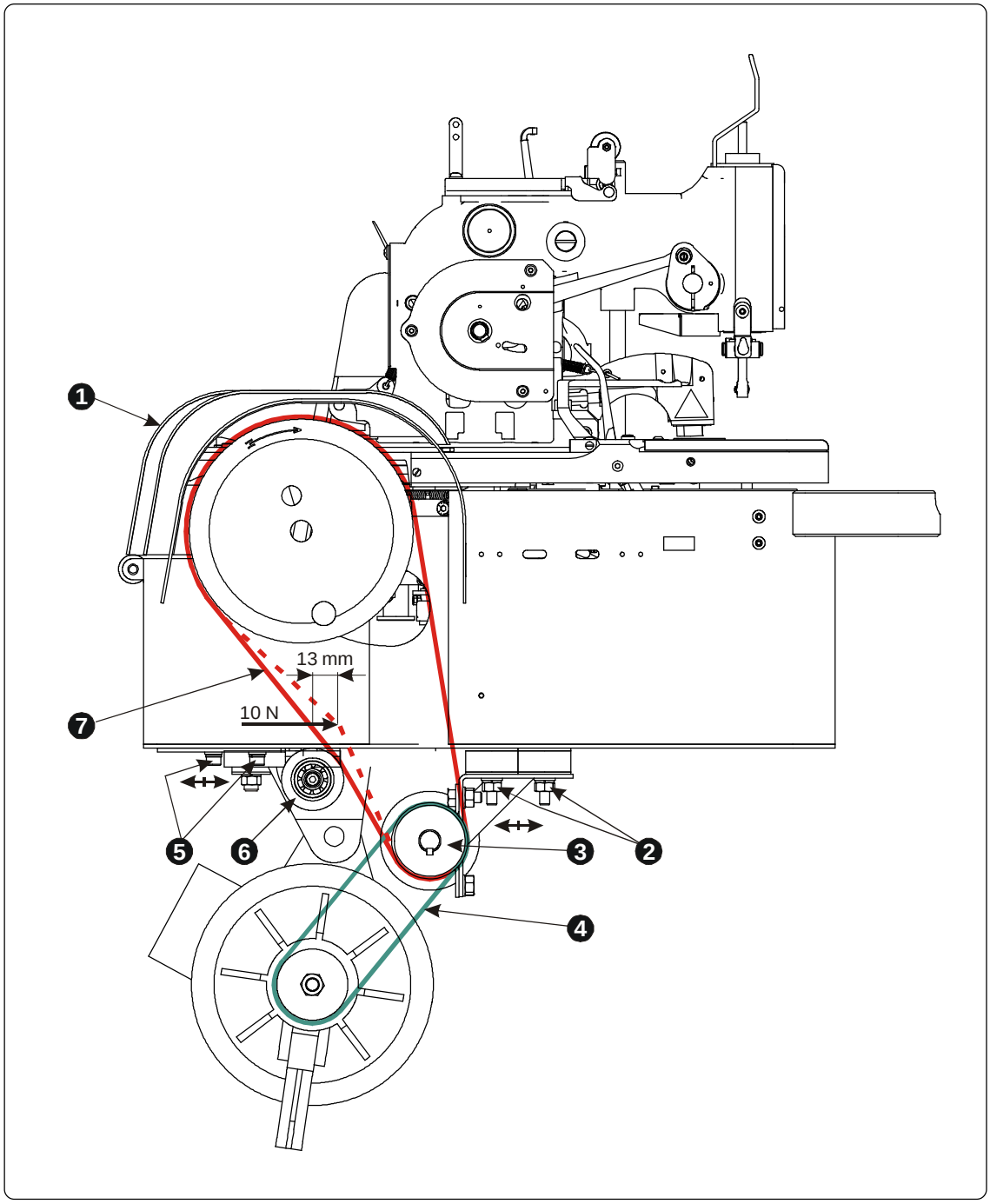

B - MACHINE INSTALLATION

6. ADJUSTMENT OF RIGHT DRIVE BELT

The drive belt ❶ is placed under the right side cover ❷. The cover can be pulled and removed by loosing the adjusting screw ❸ placed in the upper part of the cover and by removing the side screw ❹. Once the cover is removed loose the pulley screw ❺ and adjust the V-belt pulley ❻ so that the slack of the front belt part is about 25 mm (1”) when pushing on it, as shown in the picture below. Tighten the screw of the tension pulley ❺. In order to tilt the machine head easily, the pulley must be down with the tilt at least 30° backwards. Place the removed cover back onto the machine ❷.

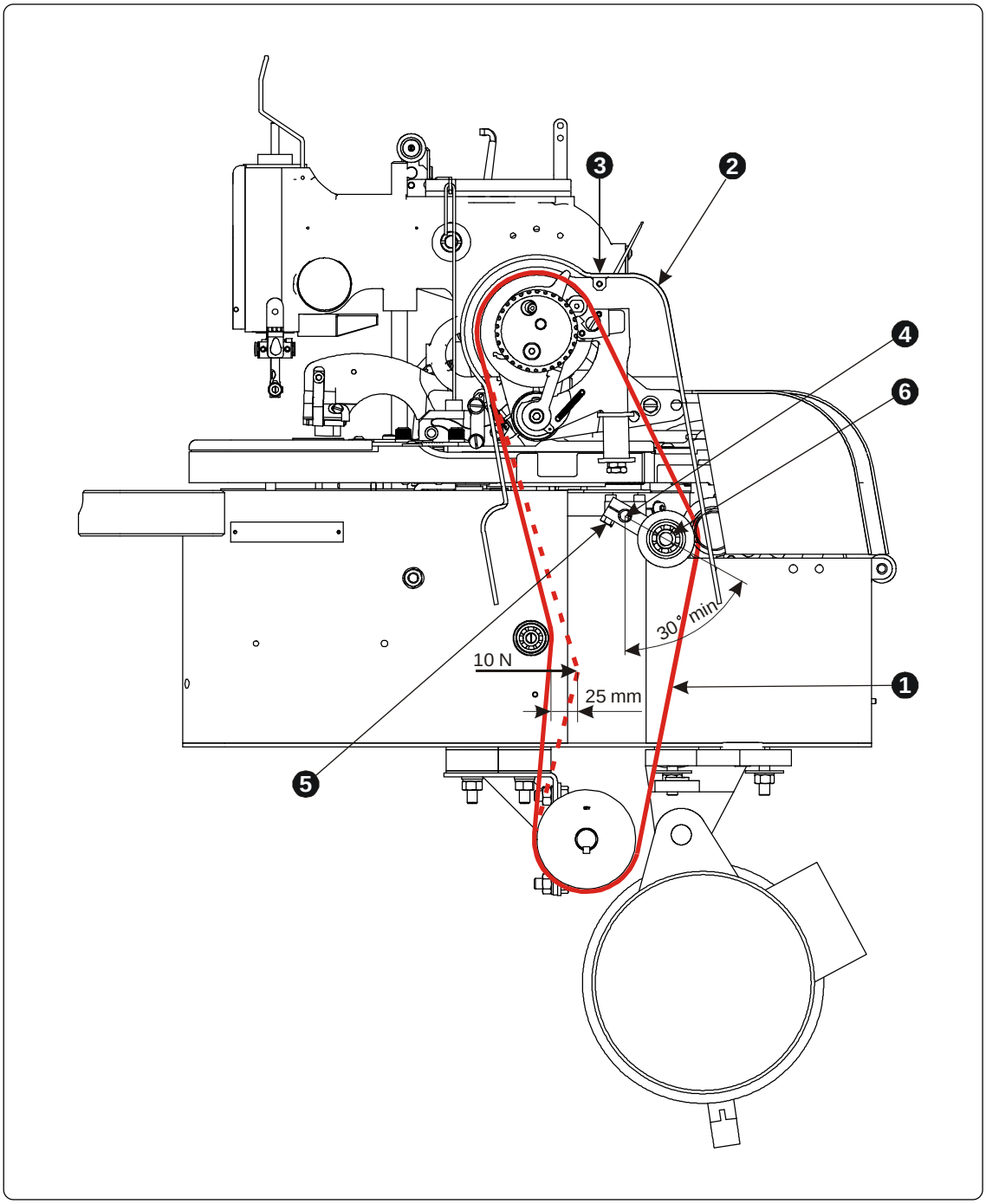

C - CORRECT USAGE

1. SEWING A BUTTONHOLE

1.1. Read carefully all safety instructions and make sure all covers are mantled onto the machine.

1.2. Put lubrication oil into lubrication holes that needs to be lubricated manually, and check that there is a right amount of oil in the oil reservoir with an oil gauge.

1.3. Check, whether the upper thread and gimp are threaded correctly, as in Section C3.

1.4. Before starting the machine for the first time, put a small piece of fabric, similar to your piece to be sewn, under the clamps.

1.5. Plug the power cord into the socket and start the motor with the operation switch (circuit breaker) ❶.

1.6. Press the foot pedal ❷ to activate the machine drive. Make sure that the drive pulley under the rear tilt cover moves clockwise.

WARNING: To make certain that the machine sews correctly, we recommend sewing a few buttonholes on a scrap piece of fabric. It will also remove excess oil from the sewing area. When the machine is in the operation, do not try to hold or move the sewn fabric with your hands.

1.7. Place the fabric under the clamp feet.

1.8. Moving the lever for manual clamping ❸ towards the operator will bring the clamping feet ❽ down and they will clamp the fabric.

1.9. Press the start up lever ❹. The clamping feet go down automatically. Once the sewing is finished and buttonhole cut, the clamping feet go up.

1.10. If it is necessary to interrupt the sewing during the cycle, pull the stop lever ❻. The machine finishes the cycle without sewing and the clamps go up.

1.11. You can stop the machine at any moment during the cycle with the foot pedal ❷ (pressing the pedal by your tiptoe stops the sewing, pressing the pedal with your heel starts the sewing again).

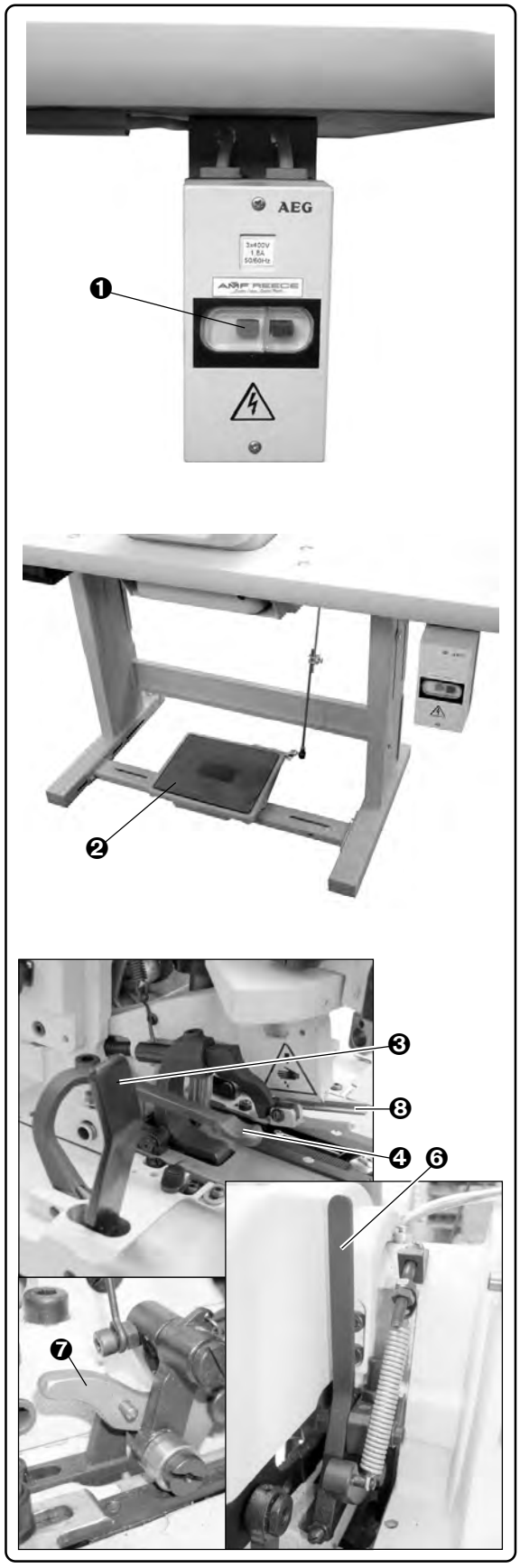

C - CORRECT USAGE

2. NEEDLE EXCHANGE

2.1. Loosen the securing screw of the needle ❷ and remove the original needle.

2.2. Place the needle so that the grove of the needle is on the other side than the tensor ❸. The needle must not have broken tip or other defect. You can check whether it is straight, if you roll the needle on the flat pad. A good needle does not deflect in the tip.

2.3. Tighten the screw ❷.

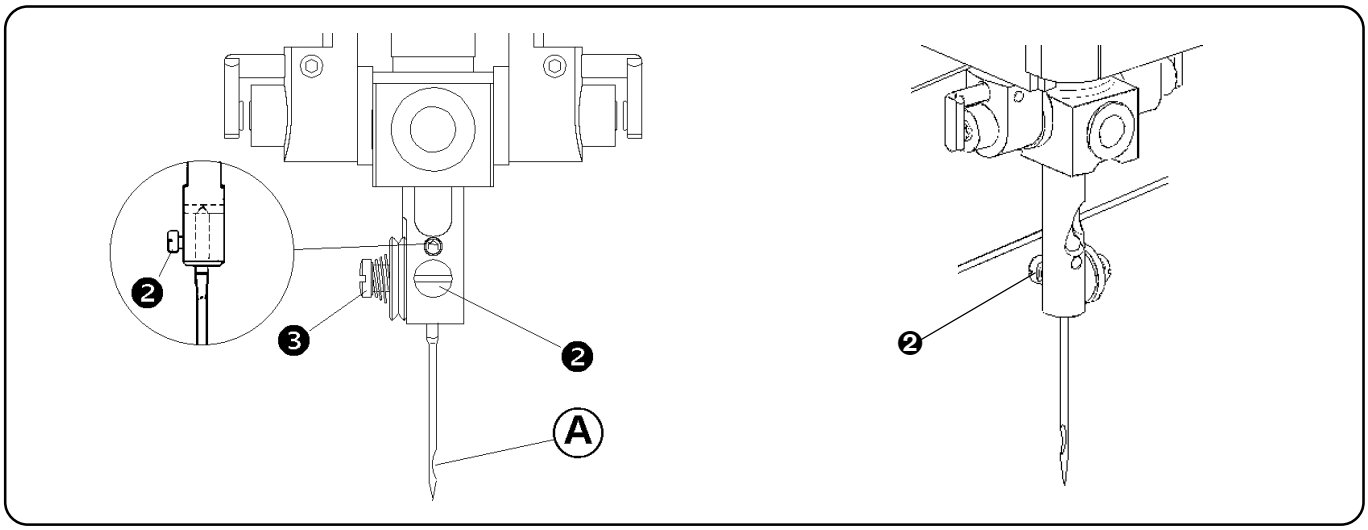

3. THREADING THE MACHINE

WARNING: make sure the power is switched off!

Look and quality of the buttonhole is influenced by:
- threads, their elasticity and resistance to breakage
- thread thickness – make sure that thread has the same thickness
- material sewn (thickness, density, fiber direction)
- upper and lower thread tension
- stitch density
- stitch width
- technology of sewing process (size of material spreading, distance of stitches from the cut edge)

Correct buttonhole should have:
- uniform stitch density
- consistent chain formation
- symmetric eye shape
- proportional shape and size
- smoothly trimmed threads

C - CORRECT USAGE

Pull threads on as shown in the pictures below. Use the threading tool ❶ (in the machine accessories) to make the pulling easier. The threading tool ❷ can be ordered (order number 12.0008.6.200). Thread tension is adjusted with the nut ❹ as per sewing conditions. Constant tension ❸ adjusted against the upper tension disk.

3.1. Threading upper thread in the machine

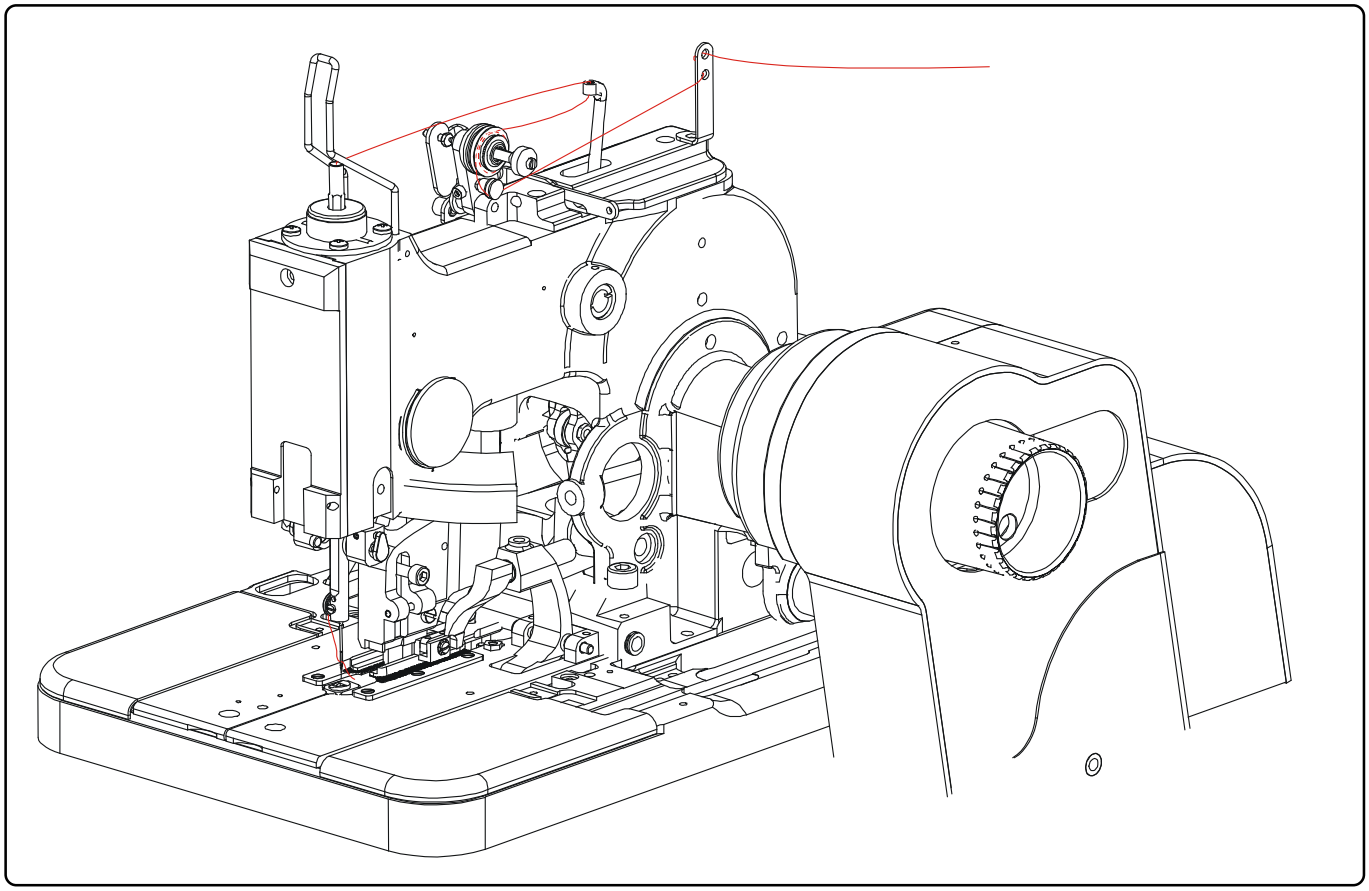

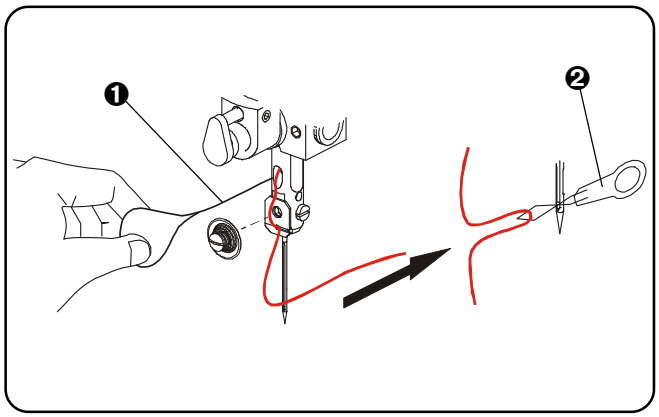

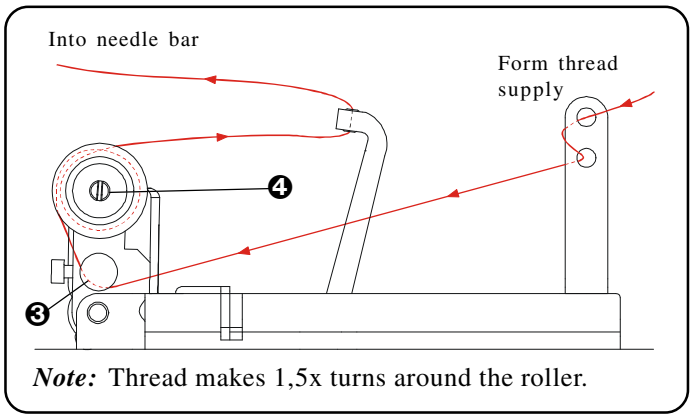

Note: Thread makes 1,5x turns around the roller.

Released 01/2010
E-mail: service@amfreece.cz; parts@amfreece.cz; website: www.amfreece.com
Phones: +420 582 309 146 (Service), +420 582 309 286 (Spare Parts); Fax: +420 582 360 606

C - CORRECT USAGE

3.2. Threading lower thread and gimp

- can be done once the back cover is tilted ❺ and machine arm lifted ❻.
- loosing clamping plates is described in Section D-11.

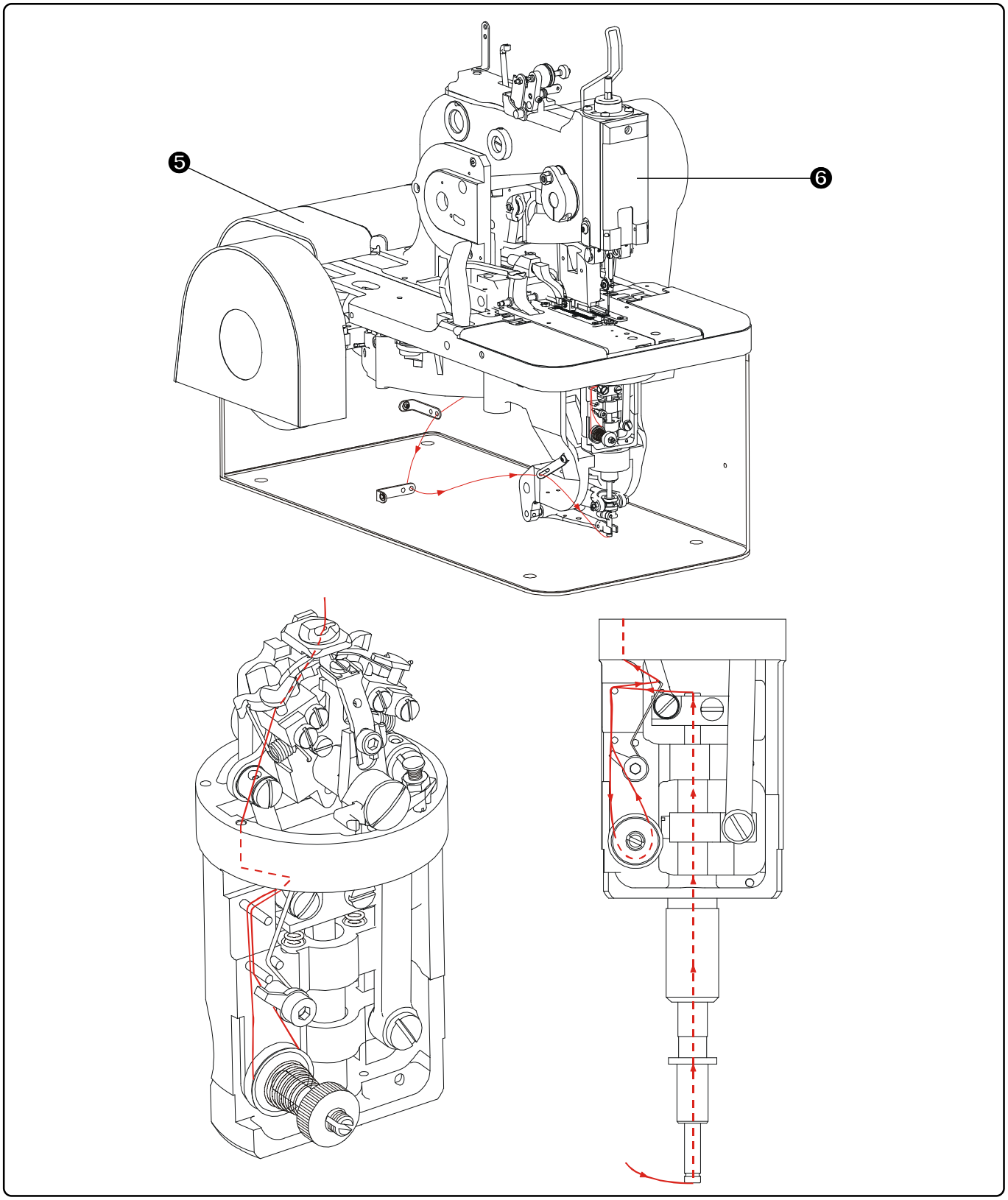

C - CORRECT USAGE

3.3. Threading gimp with a guide ❽ into the race and stitching plate ❾.

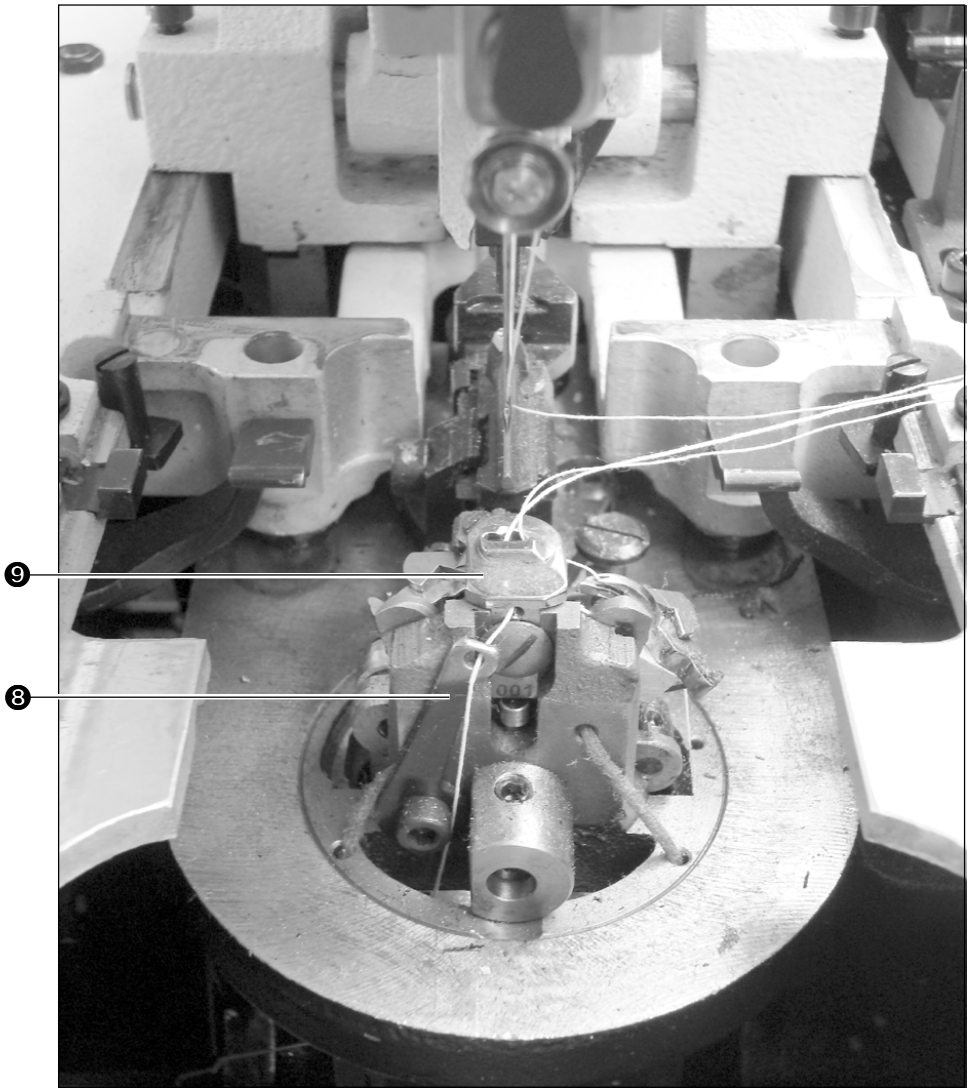

C - CORRECT USAGE

4. PRINCIPLES OF SEWING

S-105 machine manufactured by AMF Reece sews with a two-thread chain buttonhole stitch with the possibility to use gimp ❸. The principle of a chain stitch is weaving two so called endless threads, upper thread ❶ and lower thread ❷, that enables sewing applications without the necessity to refill the supply of lower thread – as it is usual when sewing lockstitches.

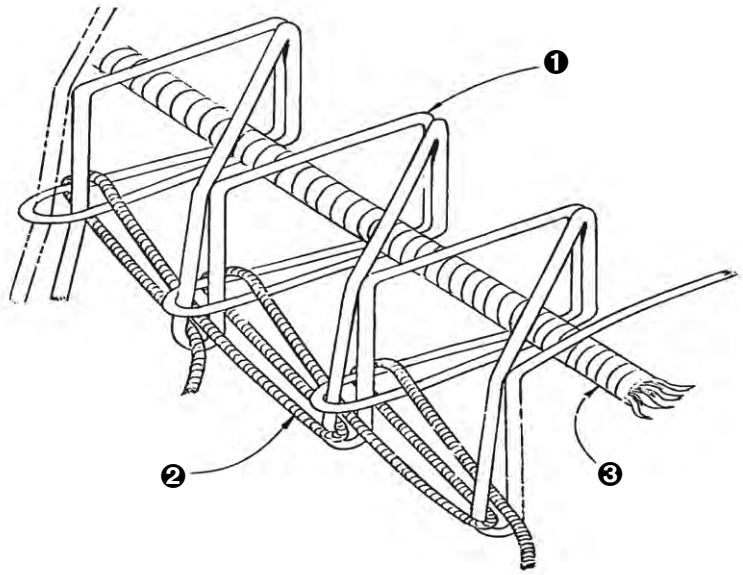

On a regular basis, gimp is inserted into the face side of the work piece (on the seam side – bottom side - of the work piece when sewing onto the machine).

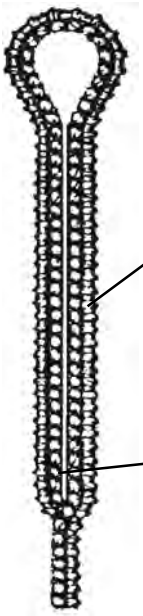

Gimp - creates plastic look of a buttonhole and together with a bottom thread decorative stitch provides the shape and firmness of a buttonhole.

Decorative stitch – creates plastic shape nearer the cut. The upper thread makes a covering stitching on the upper side of the fabric.

5. MACHINE DESCRIPTION AND ITS FUNCTIONS

The supplied machine is a box-type piece of equipment with an optimally raised working area above the table desk. The arm with the sewing mechanism is placed in the folding frame to adjust and pull in threads. The machine is installed onto the stand so that it suits an seated operator.
Machines are adjusted “cut after sewing” (CA) at the manufacturer, unless specified otherwise. The base position of a working plate of such adjusted a machine is in its rear dead point. After the start of the machine, the plate moves towards the operator, during which time the clamps clamp the work piece and the plate moves to the point where the buttonhole sewing is suppose to start. The feet automatically stretch the work piece in order to ensure high quality of sewing. The size of opening is adjustable. The sewing mechanism automatically starts sewing in the place of the buttonhole by releasing the clutch of the drive shaft and the buttonhole is sewn. The starting moment and the buttonhole length can be adjusted by changing the cutting steel, possibly the knife too.
Once the sewing of a buttonhole is finished, the needle is set in the upper position and the plate moves to the position where upper thread is trimmed. After that, the work piece is cut, the clamps open themselves and the work piece is released. The whole cycle, excluding the sewing, can be run by the hand wheel on the left side of the machine under the removable cover.
The machine operation can be stopped immediately with the operational switch (breaker) or table pedal.

6. CHANGING SEAMING WIDTH

The standard range of seaming width – from 1,9 up to 3,0 mm can be changed by loosing the nut ❶, shifting it between the stops and tightening it again.

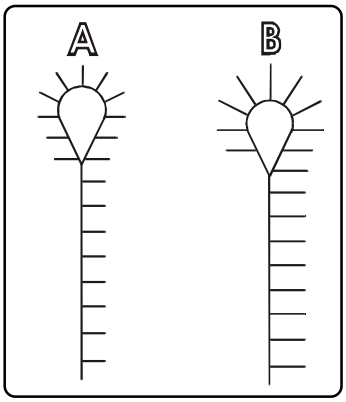

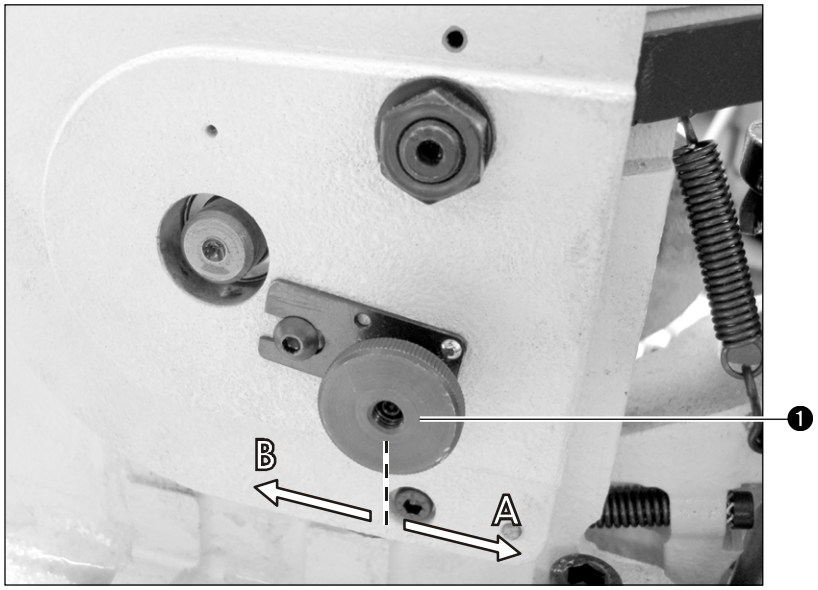

WARNING: When adjusting this device, check the needle position against the hole for gimp in the stitching plate. The needle tip must not go through the hole during centre and side prick. This way you can check that the gimp will be sewn between the stitching rows.

Released 01/2010
E-mail: service@amfreece.cz; parts@amfreece.cz; website: www.amfreece.com
Phones: +420 582 309 146 (Service), +420 582 309 286 (Spare Parts); Fax: +420 582 360 606

C - CORRECT USAGE

7. STITCH DENSITY ADJUSTMENT

The stitch density adjustment can be done once we remove the back cover.

7.1. To adjust the number of stitches, loose the nut ❶ and move the drawbar ❷ forward → A or backward → B (forward to increase the number of stitches, backward to decrease the number of stitches) as needed. Once you finish the adjustment, tighten the nut ❶ .

7.2. The technique to change the number of stitches in the eye is different for sewing buttonholes with eye or without eye. As a standard, the manufacturer adjusts the machine for sewing buttonholes with eyes. To sew a buttonhole without eye (NO EYE), move the lever ❸ forward → C. Loosen the screw ❹, move the pin ❺ forward or backward (forward to increase the number of stitches, backward to decrease the number of stitches). Once you finish the adjustment, tighten the screw ❹. The pin ❺ controls the descent of the roll ❻ on the inclined plane in the moment of the race turning.

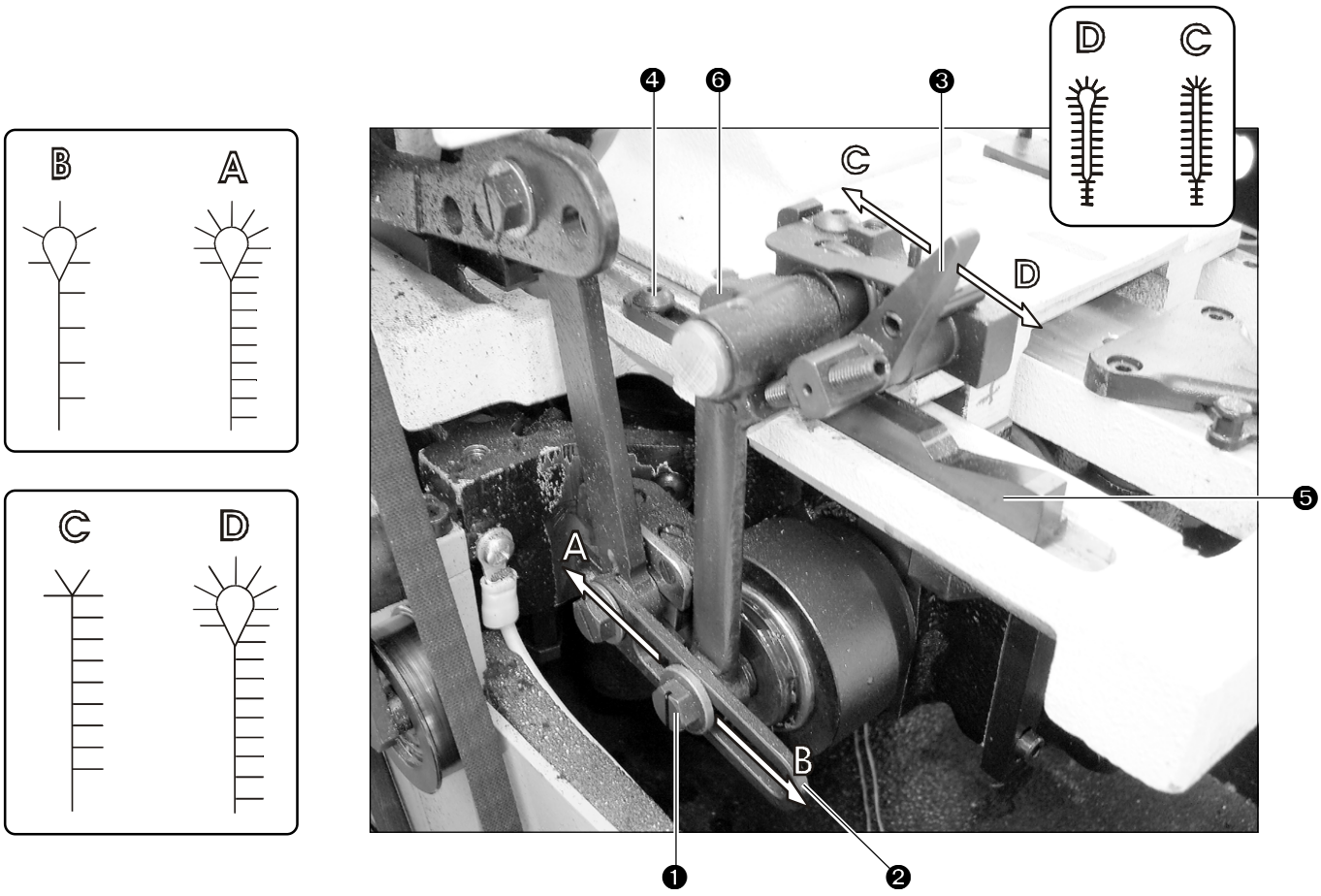

NOTE: The stitch density slightly changes as the main cam brake wears out during the machine operation.

C - CORRECT USAGE

8. STITCHING LENGTH AND FLYBAR ADJUSTMENT

8.1. The length of stitching, it means the moment when the sewing process begins with the movement of working desk can be influenced as follows: loosen the screw ❹ of the dial gauge ❺ and move it ❺ so that the required length of stitching on the dial gauge ❺ is at the same point as the edge of the mark ❷. Tighten the screw ❹. The total length of stitching L is now set up – see the picture.

WARNING: The total length of stitching is ***the length of cut + the length of seaming.***

8.2. If a buttonhole with flybar is to be sewn, it is necessary to loosen the screw ❶ of the ruler ❸, move the ruler ❸ towards the operator (to obtain longer flybar) or off the operator (to shorten flybar, or eliminate it). This is the technique to adjust the P length – see the picture.

WARNING: If you adjust the length, you must install a cutting steel of the corresponding length.

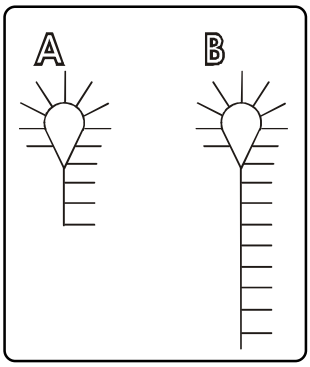

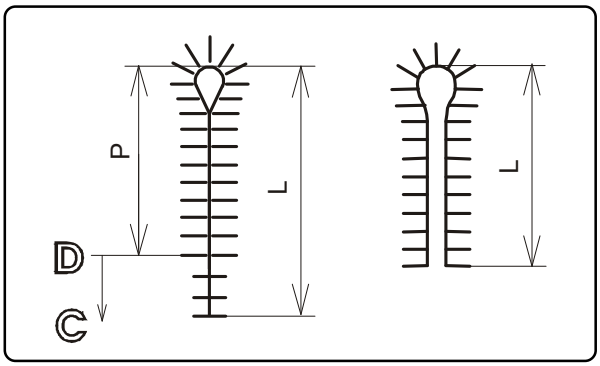

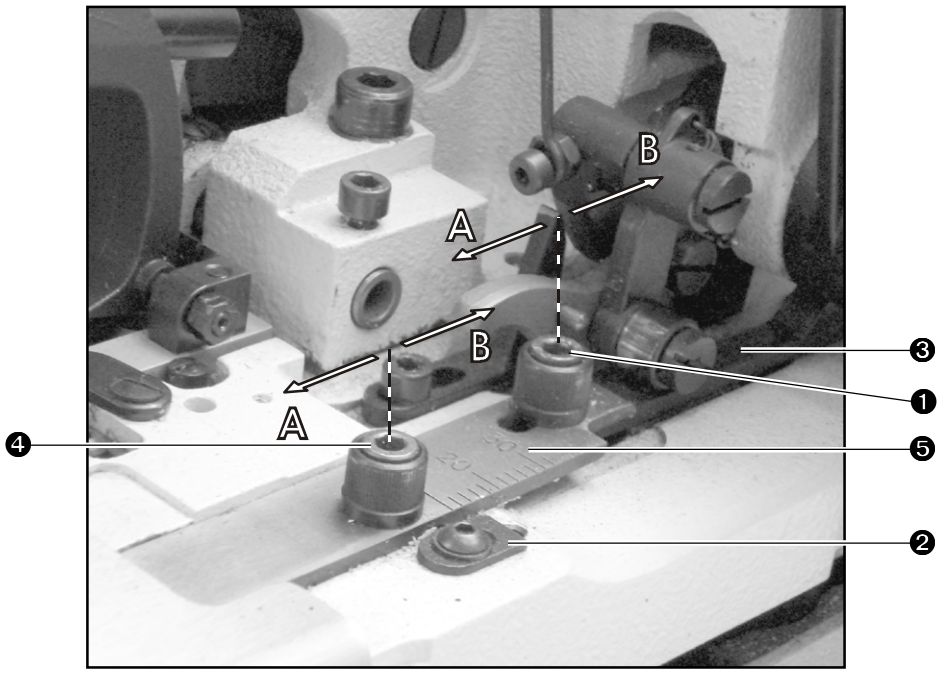

C - CORRECT USAGE

9. CHANGING THE POSITION OF STITCH ROWS – GAPS FOR CUT

The change of the position of stitch rows is used especially when the thickness of the sewn material changes or when the machine is adjusted from cut before to cut after and vise versa.
Loose the nut ❶ turn the eccentric ❷ and use the screwdriver to change the setting as per the drawing. Once the nut is set ❶ tighten it firmly.

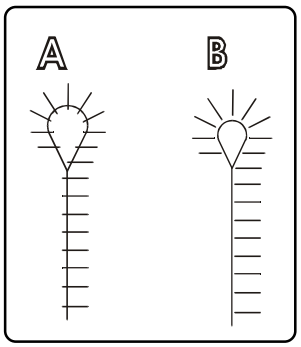

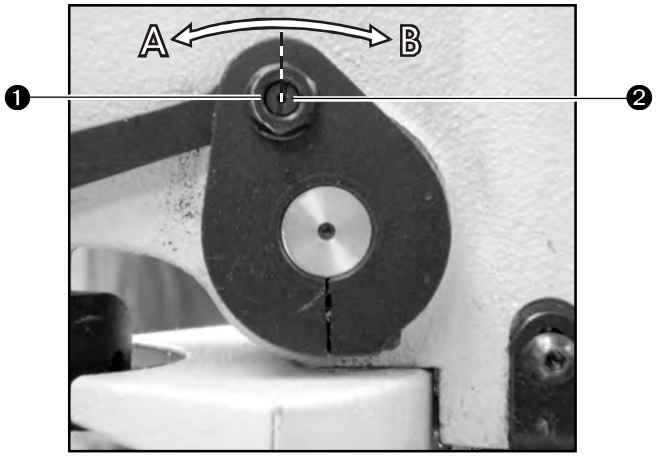

WARNING: When you change the gap between both rows of stitches, you may need to adjust the sewing mechanism as well.

10. SETTING THE SPREAD OF THE CLAMP FEET

Different types of material require larger or smaller spread of the material between the clamp feet. In order to change the spread, use the setting shown in the picture.

Loosen the screw ❶ at each side of the machine and move the setting stops ❷ inward →A, to make the spread wider - and outward →B, to make the spread narrower.

NOTE: Make sure that the spread is equal on both sides.

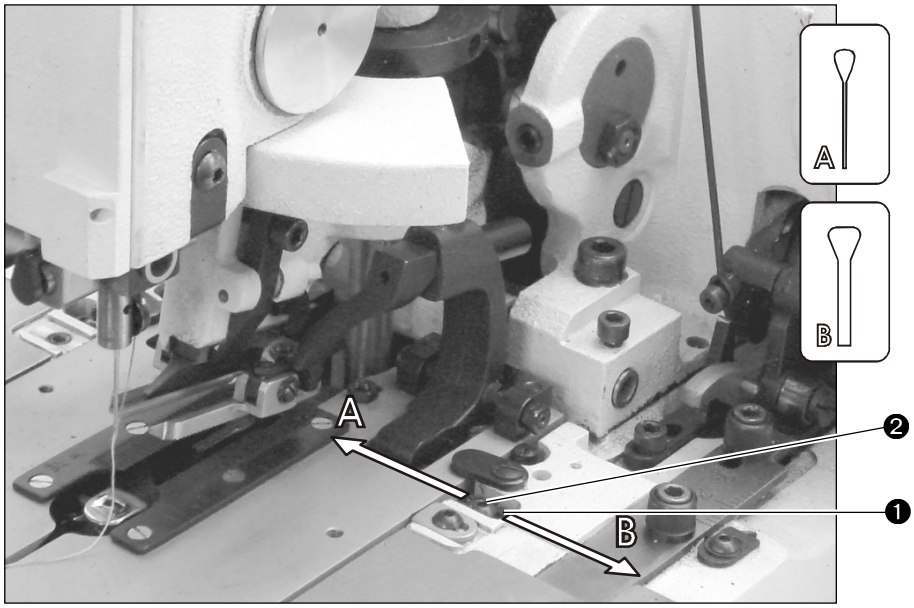

D - MACHINE ADJUSTMENT

Do not start any maintenance work before you read the service manual with instructions for mechanics – Sections D and E.

DANGER!

• before you start doing any maintenance work, always turn the operational switch (breaker) off and unplug the power cord. That will eliminate the possibility of the machine being accidentally switched on by another person.
• Make sure that the power cord is secured against any mechanical breakage.

CAUTION!

• Maintenance work must be done by a qualified person only.
• When changing defective parts, use parts corresponding with original ones.
• Do not run the machine unless all covers dismantled for maintenance purposes were placed back.
• Wipe away spilt oil. Keep the working area clean.

WARNING!

• Read carefully the entire manual for servicemen.
• Use specified kinds of lubrication or their equivalents only.

We are not responsible for claims that happen due to violating these instructions.

Pistons adjustment:

1. Setting a buttonhole without eye; when you start machine running by the hand shift, the pistons must go into the guiding travel freely in the beginning of the race turn in the eye (loopers in the rear position).
2. At the end of the buttonhole, before the home position, in the beginning of the race turn, the right piston is in the guiding travel. Tighten the screw on the lower lateral lever so that the piston leaves the guiding travel freely without the table moving sideways.
3. After running the machine by the hand shift and the race turning in the eye (loopers in the rear position), adjust the depth of the right piston about half way into the guiding travel (with nuts on the draw bar).
4. Once the left piston snap into the guiding travel (the narrower section of the travel), adjust the depth of the left piston about half way into the guiding travel (with nuts on the draw bar).
5. Once you move the roll into the highest point at the bottom of the eccentric (looking from the right side), adjust the lever so that the left piston is about 1mm above the guiding travel.

Stopping lever adjustment:

1. Adjust the pin stopper of the three fork lever to 0,1 mm once you start the machine moving. The play between the ruler draw bar and the roll is 0,1 – 0,5 mm when the table traversing, and the minimal clearance (0,1 mm) between the brake and the stopping cam.
2. Loosen the lever on the stopping cam and adjust the play on the block to 0,1 - 0,2mm. Once the roll gets onto the hump, set ut the play between the lenght gauge regular and the switch lever to 0,2mm.
3. Move the table to the home position by turning the crank on the cam case, leave the table still. Adjust the play between dogs (gauge 1,5mm) by moving the stud on the stopping lever (smaller play towards the operator, larger play off the operator).

D - MACHINE ADJUSTMENT

1. TABLE ADJUSTMENT

Lift up the machine head into vertical position over the cam case, turn the left hand wheel and check that the pistons go into the guiding travel ❺ freely. If not, loosen the screw ❼ of the lever ❽ and adjust the table position with the cam ❻, tighten the screw ❼ again as needed.

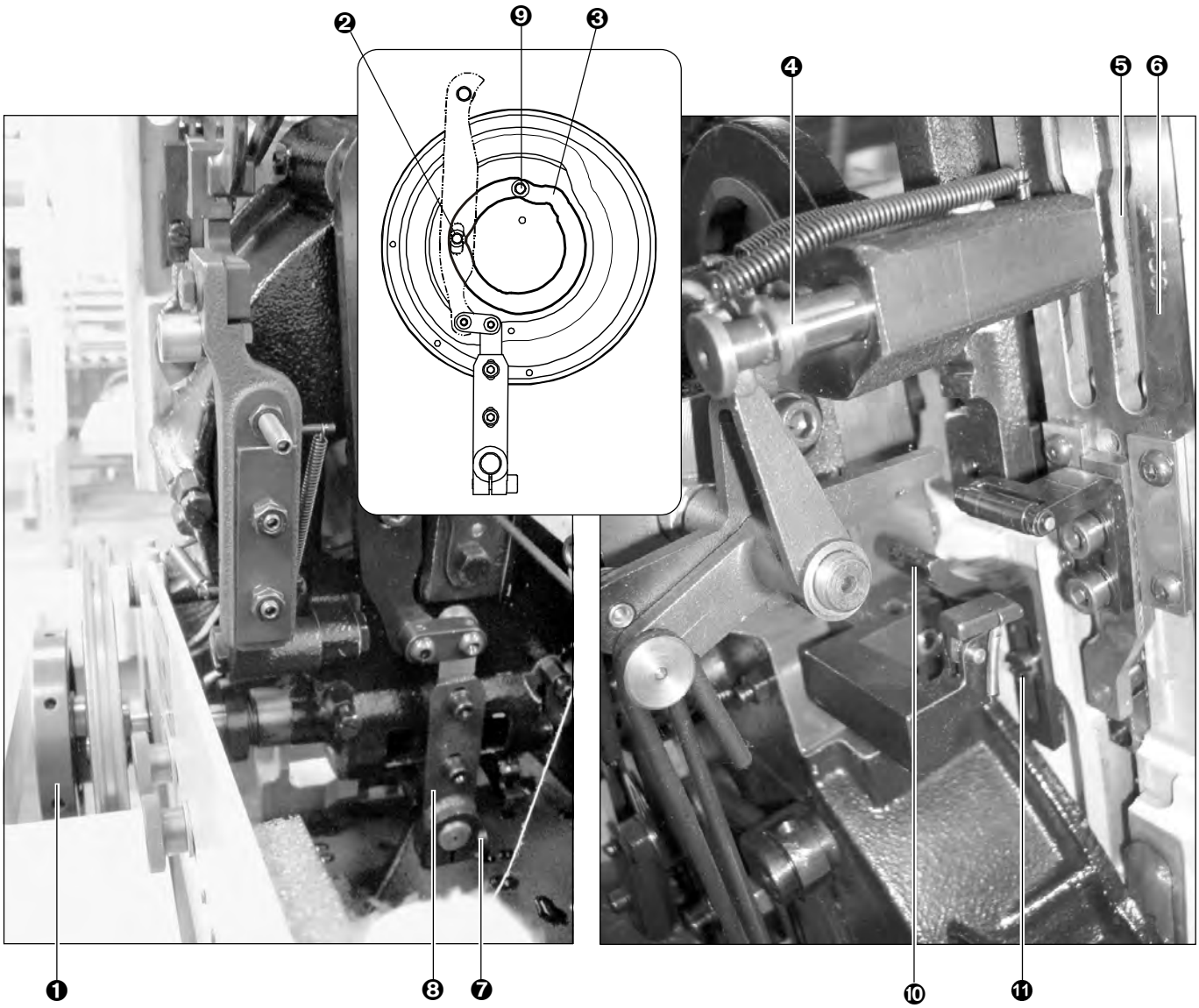

WARNING: At the manufacturer, the stud holder ❹ is fitted with small wedges and fixed with a pin. Do not change the position of wedges. Switching over the stud can be adjusted after turning the cam into the position when the roll ❷ is in the position ❾ of cam travel ❸. The stud ❹ should leave the groove ❺ in the cam at this point. If not, adjust the ❿ bracket as needed once you loosen the screw ⓫.

D - MACHINE ADJUSTMENT

2. STOPPING MECHANISM

2.1 Adjustment is done out of sewing process in the home position of the machine, it means during the time when the stopping mechanism blocks the movement of sewing shaft. It is impossible to turn the jand wheel ❶. The play of the roll in this position is 0,1-0,2mm above the draw bar ❸. Stopping lever ❹ secures the roll stud ❺. Loosen the nut ❻, set up gap between the roll ❸and the draw bar ❷ by the screw ❼. Then set up the stop to the roll stud having the play min 0,1mm.

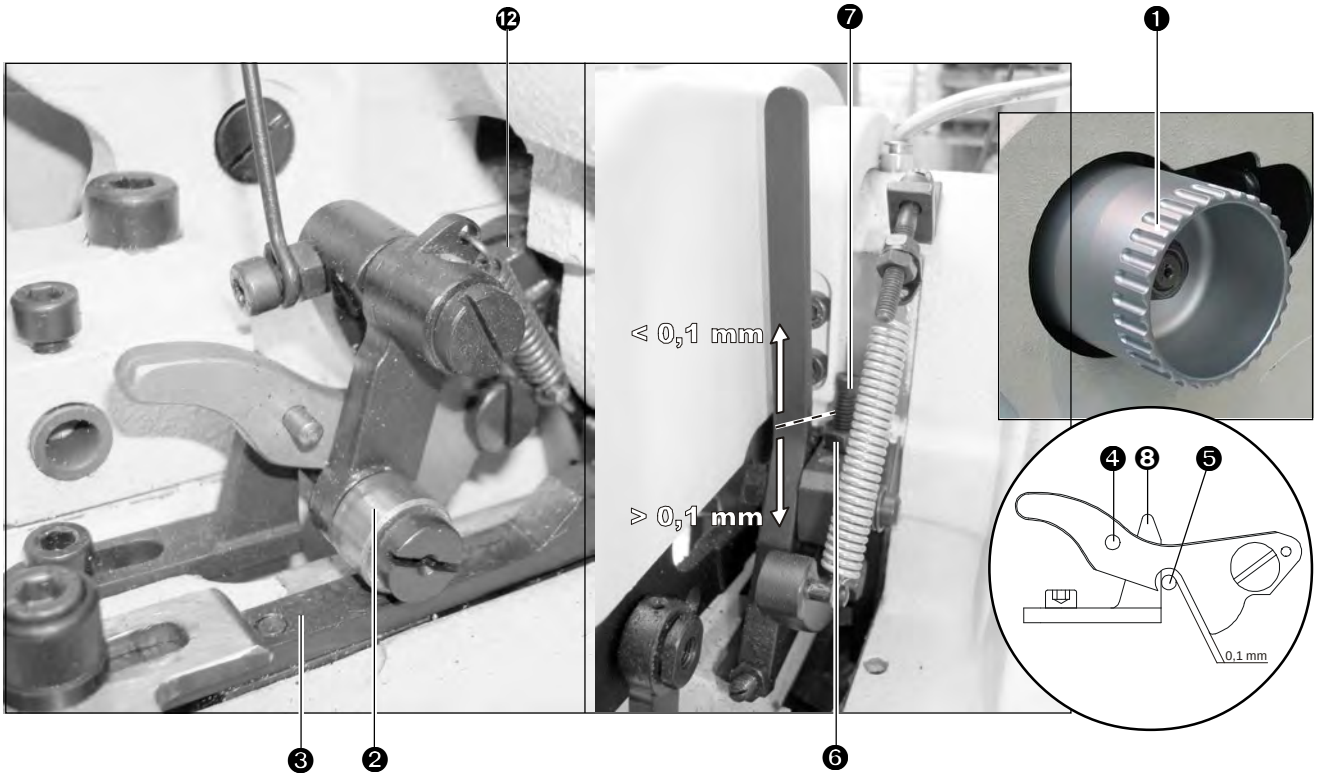

2.2. Spring adjustment on the stopping lever ⓫ - picture II. - the nut is flat to the screw.

2.3. Turn the left wheel ⓭ until the stop ⓲ is released from the right stopping wheel. Once the stop is released, stop the turning.

2.4. Adjust the clearance 0,1 - 0,2 mm between the dogs by loosing the screw ⓯ and turning the wheel ⓰ as per the needs. Once the adjustment is done, tighten the screw ⓯.

2.5. By turning the wheel ⓭ you get to the place where the roll achieves the top position 3. At this moment, release the lever ⓲ with the nut ⓳ and adjust the clearance between the arm ⓱ and lever ⓲ to 0,1 - 0,2 mm. At the end of cycle the clearance between the dogs should be approx. 0,25 mm or more. If not, loose the screw ⓴ in the slot on left side of the machine and adjust it as per the needs. Test the machine cycle.

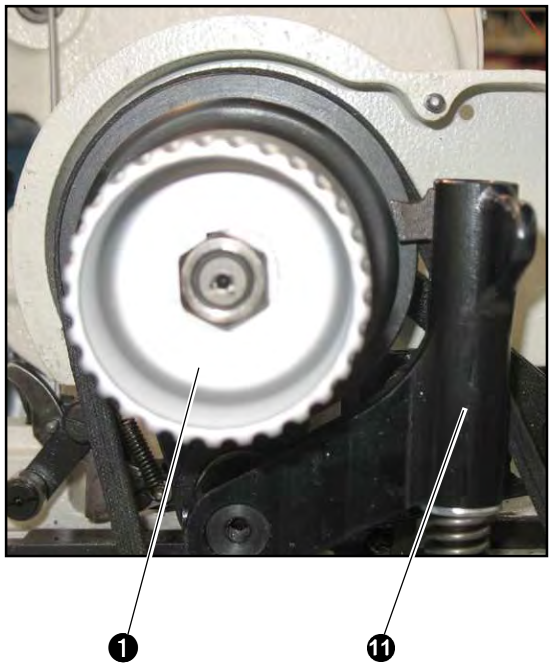

D - MACHINE ADJUSTMENT

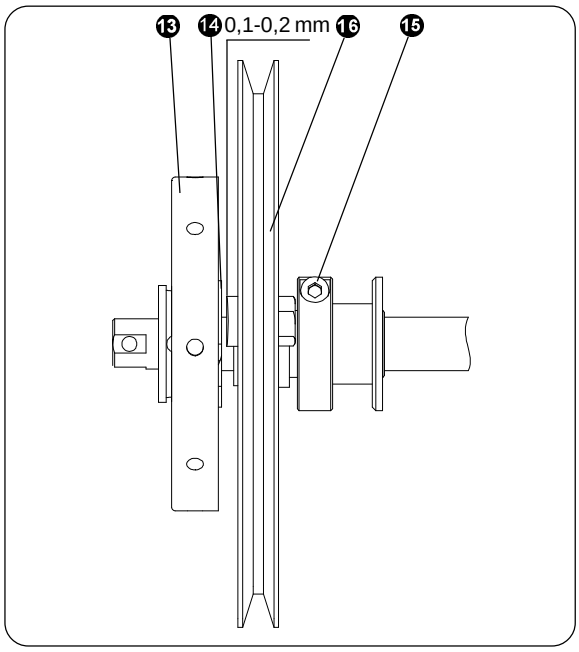

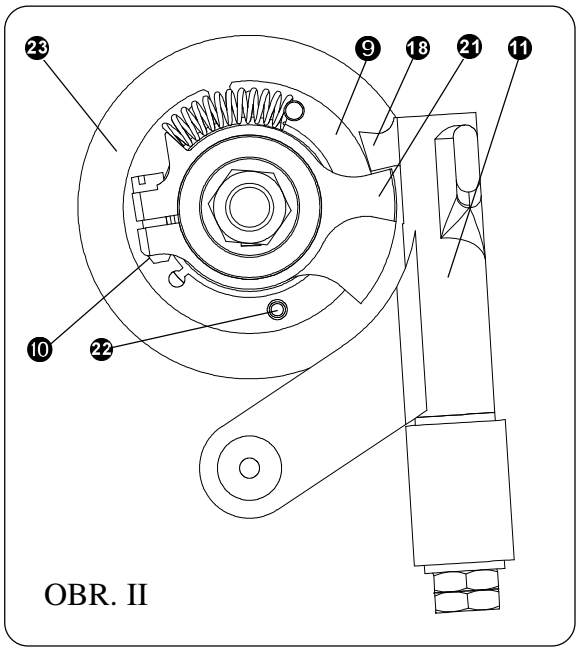

OBR. II

2.6. Adjustment of the clearance 5 mm between the stopping wheel ㉓ and lever ㉑. Dissamble the hand wheel ❶ and then the stopping mechanism. Pull out the stopping screw ㉒ from the stopping mechanism and disasemble the safety ring ❾. release the screw ❿ on the clutch, so the lever ㉑ can be moved and turned. Put the clutch mechanism to the shaft and adjust the way that by the clutch stroke (anticlockwise) and after putting the hand wheel, the clearance will be 5 mm between the edges of the stopping wheel and lever ㉑. Tighten the screw ❿. remove the stopping wheel and the clutch mechanism from the shaft. Put on the clutchmechanism into the stopping wheel and the safety ring and secure with the screw ㉒. Adjust the stopping mechanism on the shaft, put on the hand wheel and secure with the nut.



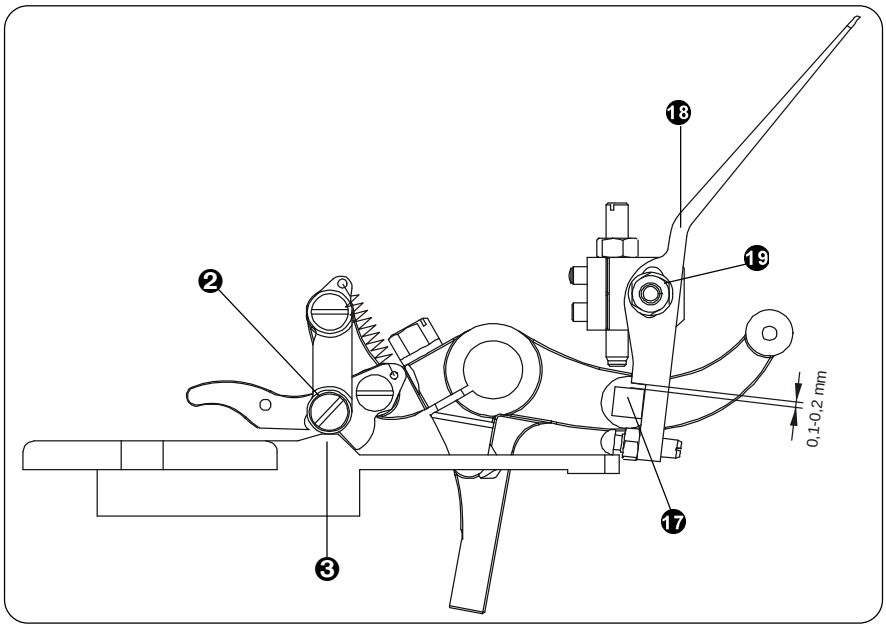



3. BRAKE ADJUSTMENT

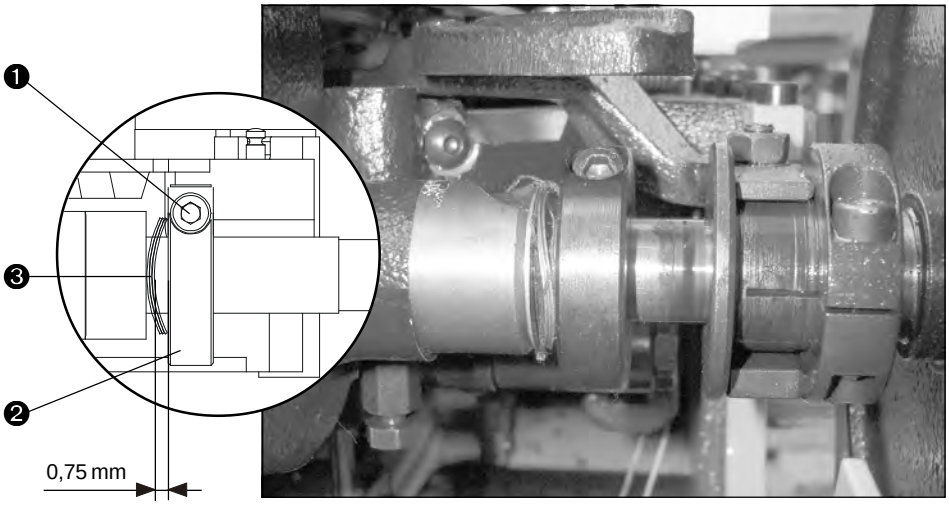

3.1 Adjustment of drive shaft brake

The Drive shaft brake optimalizes the stitch density of the buttonhole seaming on both, left and right side.

1. Loosen the screw ❶ of the ring ❷ of the drive shaft brake
2. Set the brake pressure using a suitable tool (screw driver). Set the groove between the flexible washers ❸ by pressing them and the ring for approximately cca 0,75mm.
3. Tighten the screw ❶ of the ring❷

***WARNING*:** The shaft brake is an emergency brake. If the main shaft brake pressure is too high, machine mechanisms may work incorrectly; especially the stopping mechanism. Set the lowest possible pressure.

3.2 Main cam brake adjustment

The main cam brake affects the stitch density, which is adjusted as in chapter 2. It is a specification given by the manufacturer to set up the distance between stitches. It is necessary to adjust the brake belt again after some machine operation because of wear out.

1. Loosen the safety nuts ❹.
2. Turn the screw ❺ increase the pressure of 1/4 turn.
3. Tighten the safety nut ❹.

NOTE: Combination of pressures of both brakes should make it possible to reach 1,6 mm moving downwards on one stroke with stitch density set up as in section C7. No more no less!

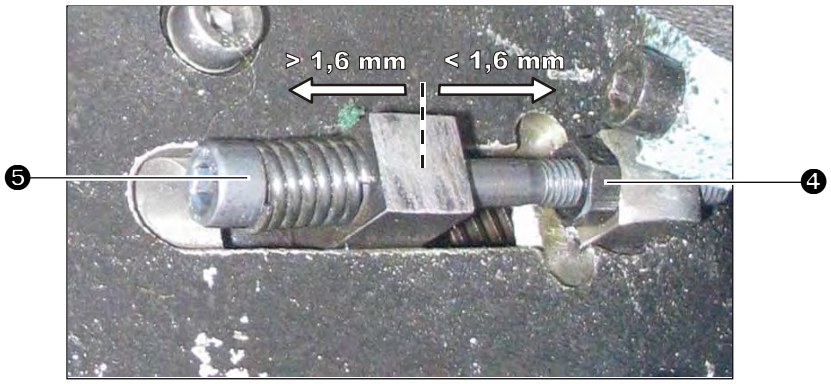

D - MACHINE ADJUSTMENT

4. NEEDLE BAR AND RACE ALIGNMENT

When the machine does not move, turning segments ❶, ❸ are adjusted on the right in the machine axis onto the second segment gear. Supporting area of the looper holder ❽ is in vertical position on the table axis ❾. The looper mechanism is adjusted after loosing the screw ❷ needle bar mechanism after loosing the screw ❹. Tension disks ❼ are forward-facing. Adjust the symmetric turning with the stud ❺ , and turning sewing mechanism onto 180° ± 2° with the stud ❻

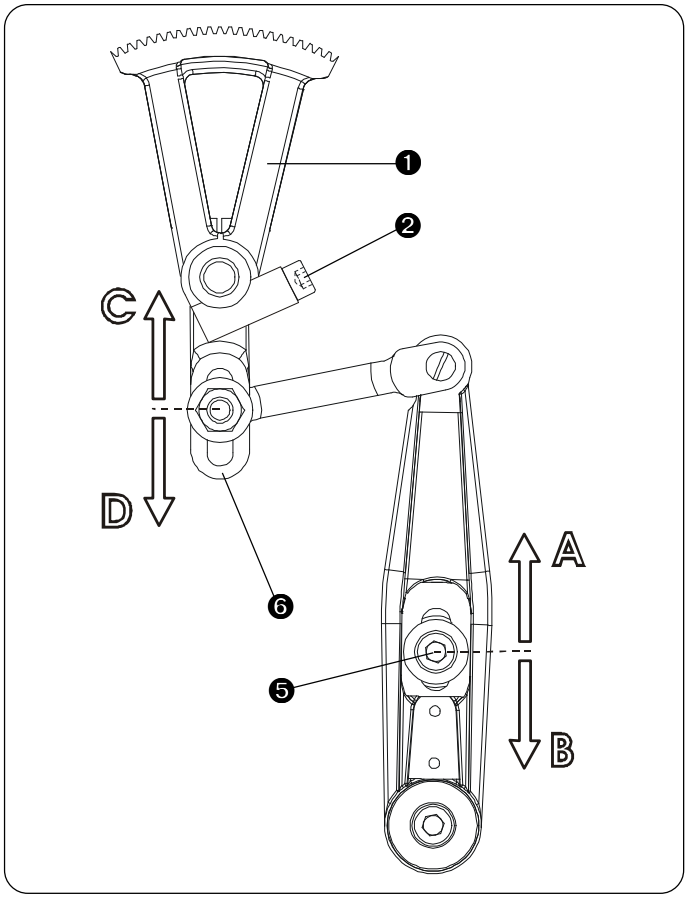

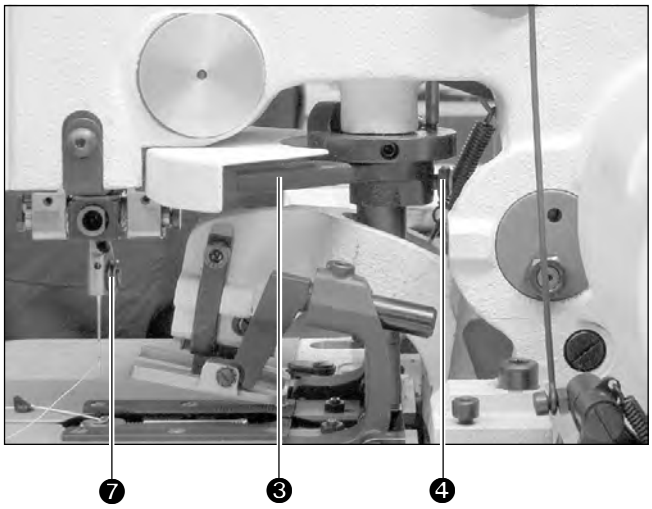

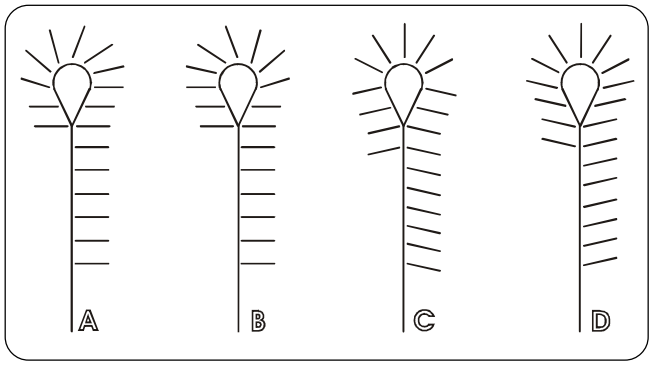

WARNING: It is very important to move the looper mechanism of 180°only. The turning must be vertical and onto horizontal table axis ❾ the correct bite of the needle bar must be in the same distance from the looper mechanism (the needle cannot move further or closer to the edge of the throat plate).

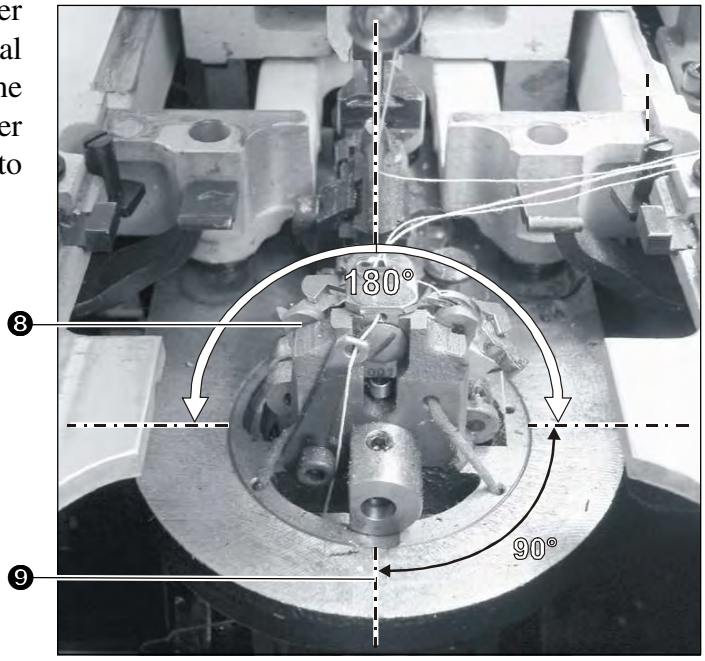

D - MACHINE ADJUSTMENT

5. BUTTONHOLE SHAPE ADJUSTMENT

To adjust the buttonhole shape, it is necessary to create a new stitching pattern.

5.1. Check the new stitching pattern and determine where to adjust the nut ❶ to obtain the right eye shape. Use the examples below as guidance.

5.2. Once you loosen the nut ❶ placed on the lever ❷ move this nut upwards or downwards as needed. If the eye shape corresponds with the picture in the example A, move the nut ❶ downwards. If the eye shape corresponds with picture in B, move the nut ❶ upwards.

5.3. Tighten the nut ❶ after the adjustment. Start the machine and make another stitch pattern. If we did not obtain the required eye shape on the sample, repeat the above mentioned steps.

NOTE: It is a standard procedure to repeat the process several times.

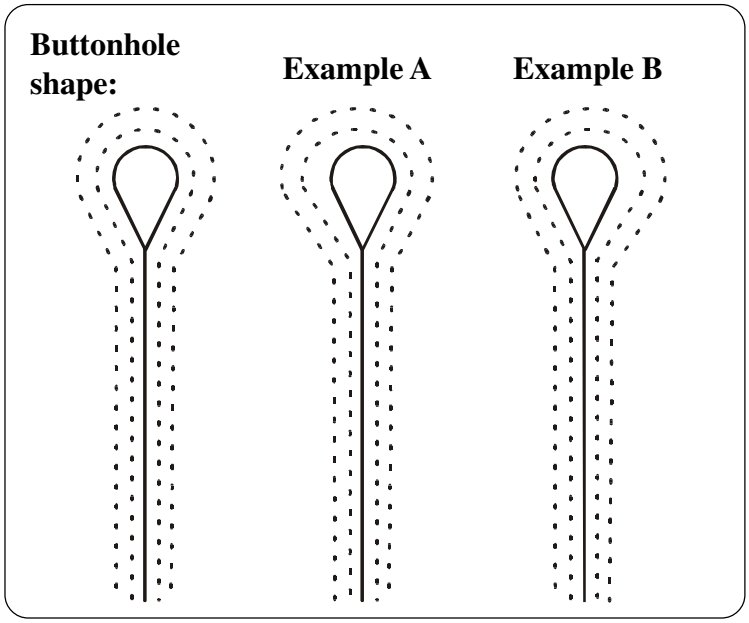

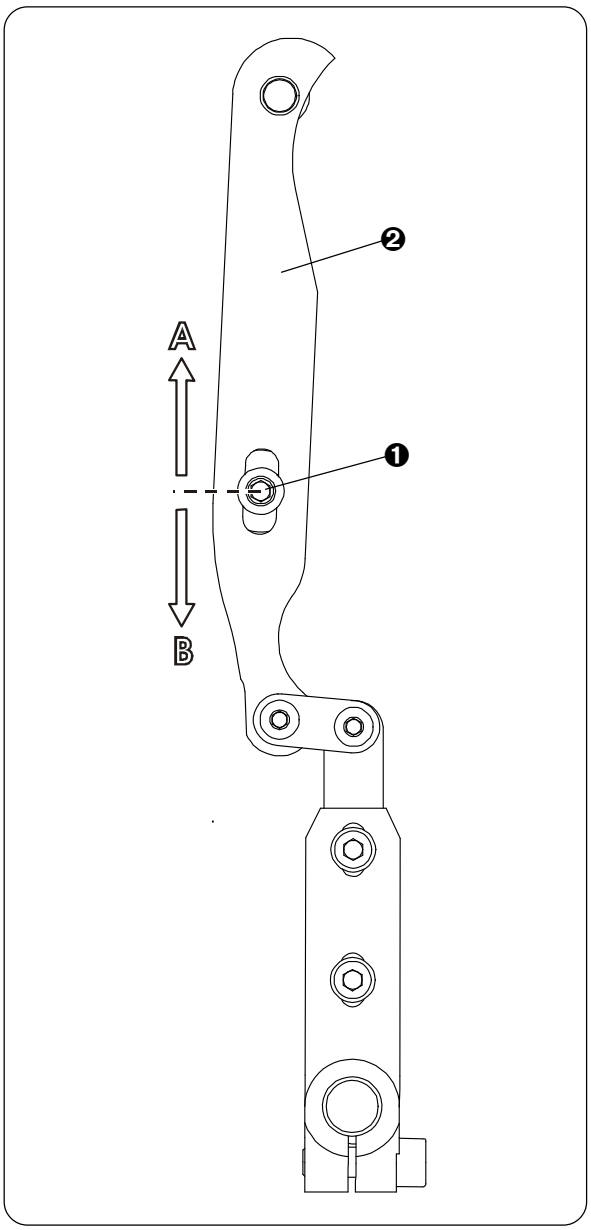

D - MACHINE ADJUSTMENT

6. NEEDLE BAR HEIGHT

Turning the hand wheel on the right side of the machine, lower the needle bar ❶ to the bottom position. Use the gauge ❹ (03.0279.1.000) to make an adjustment or another similar tool with checking point 16,2mm from the bottom surface for clamp plates.

- Loosen the collar screw ❸ to lower the needle
- Loosen the collar screw ❷ to lift up the needle

Set the other collar so that the needle bar does not have ascial play, but turns freely in the turning point. Tighten the collar screws again.

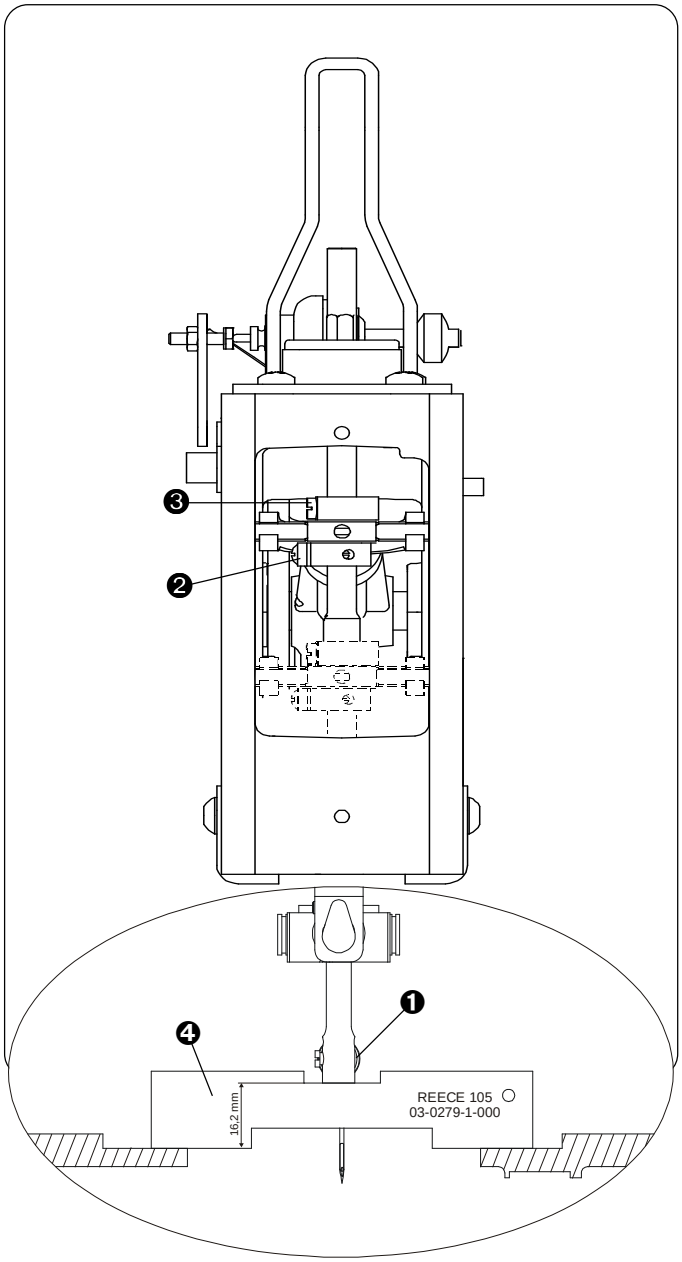

WARNING: It is recommended not to loosen the upper bearings. The manufacturer adjusts the bearing in a way that the needle tip is set onto the sewing mechanism axis – such setting eliminates the production variations of machines. Other adjustment can damage parts of the sewing mechanism or break the needle.

D - MACHINE ADJUSTMENT

7. LOOPERS ADJUSTMENT

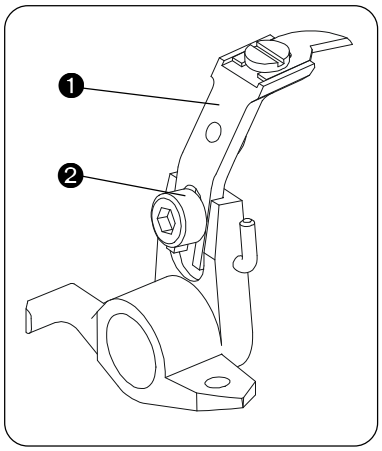

7.1. Adjustment is done with clamping plates dismantled from the machine, stitching plate and the upper thread trimming knife holder ❶ removed. Loosen the screw ❷ to remove it.

7.2. The loopers are adjusted correctly if their tips are in the centre of the needle, when the needle lifts up of 2,9 mm from the bottom dead point. It is suitable to do the adjustment in the moment when the blocking lever is out of function, in the area of sewing. This position can be reached by turning the left hand wheel until the block lever lifts up.

7.3. Adjust the distance of the left looper ❺ from the needle after loosing the screw ❽ so that there is a gap 0,1-0,2mm between the needle and the looper tip. Tighten the screw. Adjust the same gap on the right looper ❼ when it goes along the needle.

7.4. The needle bar can be lifted up from the bottom position in the centre stitch by turning the hand wheel so that it is possible to stick in a gauge ❹ with its higher end between the surface plane for clamping plates and the end of the needle bar. Once you loose the clip screw ❸, move the tip of the left looper ❺ onto the needle axis ❻ and tighten the screw. Turn the hand wheel until the right looper ❼ comes to the needle centre. Side bite should be minimal, as per section C6. The needle bar should be at the same height as at the left looper – check with a gauge ❹.

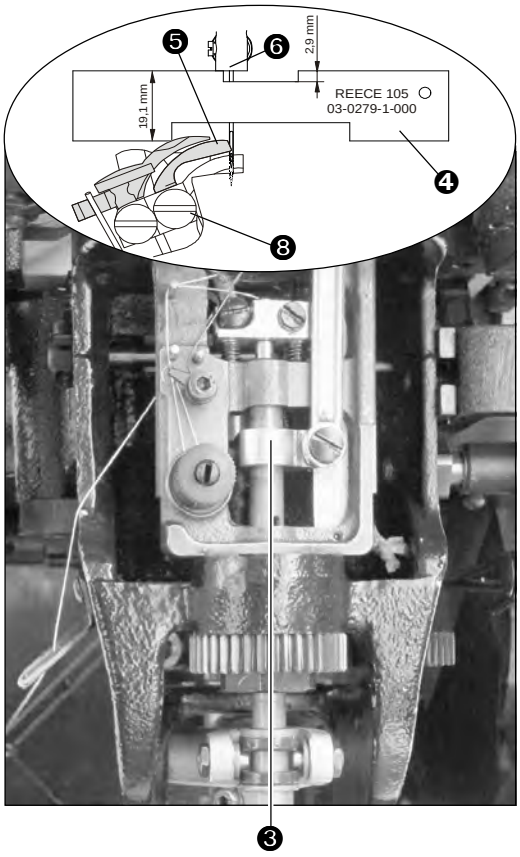

WARNING: It is important to check that the gap between left (right) looper is the same in the side bite when coming back as per 7.3. Different gap can be adjusted as per section D5. it is necessary to check the distance of the loopers in 3 positions of the needle bar and the race. (1st row of stitches, eye tip, 2nd row of stitches).

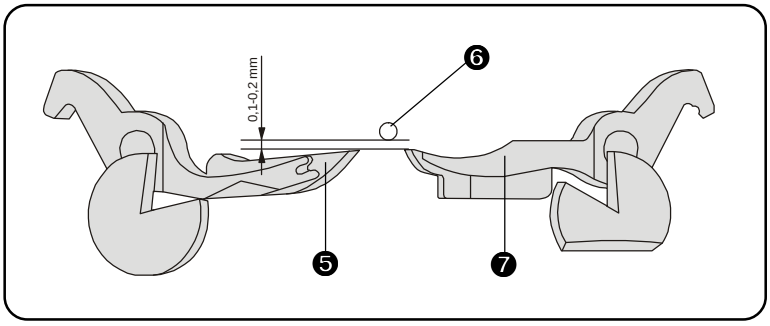

D - MACHINE ADJUSTMENT

7.5. If it is not like that, loosen the crew ❿ and turn slightly the bushing nut ⓫ with a wrench until the loopers are in the axis of the needle, at the same height.

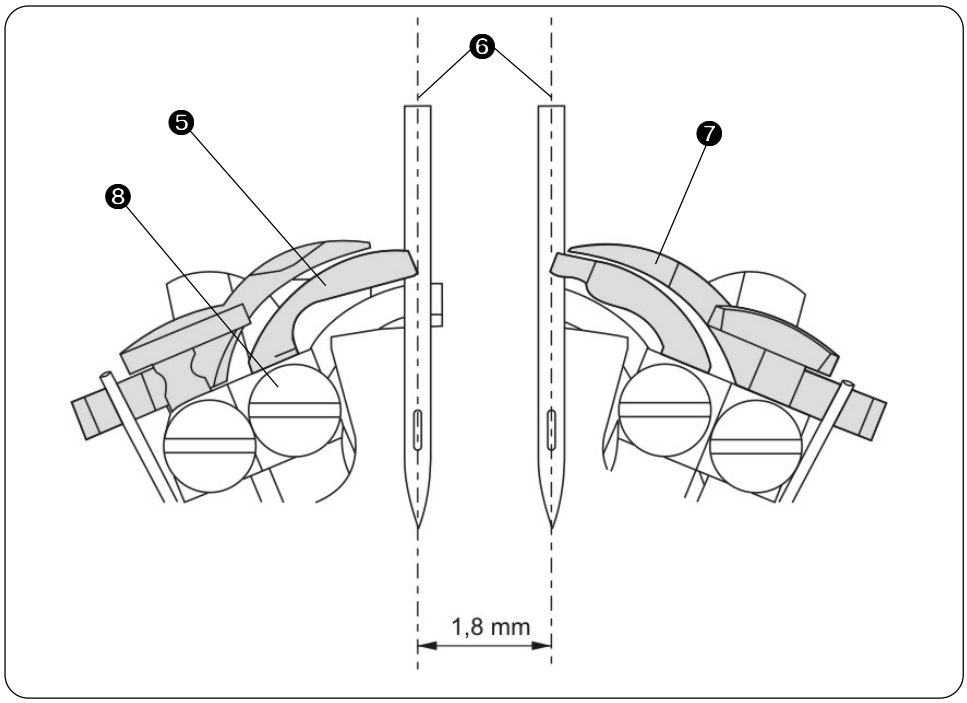

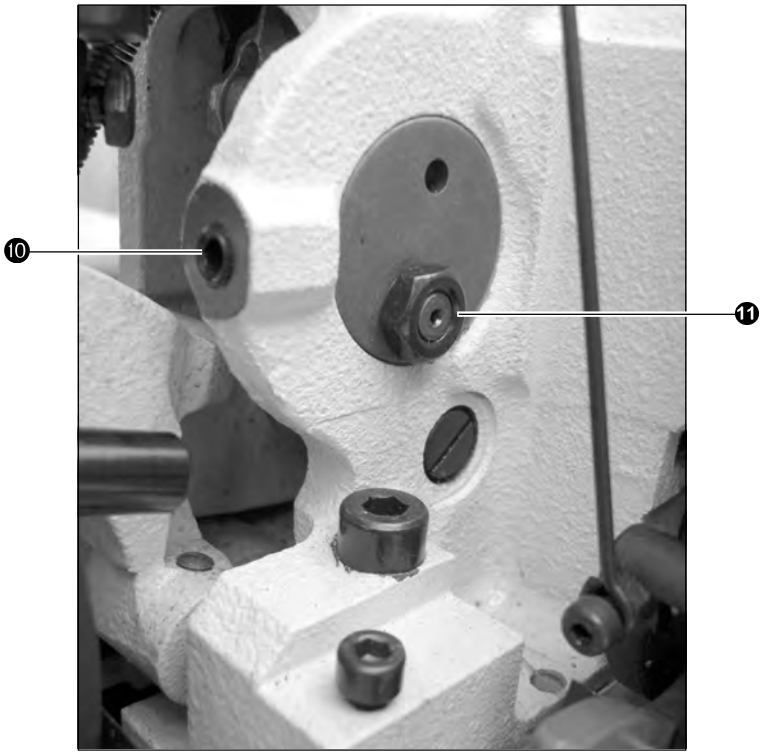

D - MACHINE ADJUSTMENT

8. SPREADERS ADJUSTMENT

8.1. The position of spreaders is controlled by stoppers ⓬. The right spreader ⓾ needs to be adjusted to the edge of the right looper ❾ , the left spreader ⓫ with its groove to the opening of the left looper ❻. Loosen the screws ⓭ to change the set up with adjustments of stoppers ⓬. The stoppers also define the axial play of the spreaders; after their adjustment, they must not hang.

8.2. Spreaders set up, to achieve correct operation of the left ⓬ and right looper ⓾, is done after loosing the nut ⓱ and adjusting the tail ⓲ of the draw bar by turning it. Adjust the right looper so that it is in the home position at the moment of being back in the bottom dead point. This is the key point for spreding of the left spreader. It is important that the distance between the needle and the spreader is same for both spreaders.

WARNING: Check the play between loopers and spreaders. It must be as small as possible:
Right - 0,05mm at the most, so that sewing thread cannot slide in between the right loopet and spreader.
Left - 0,1mm minimum, so that sewing thread cannot slide in between the left loopet and spreader.

Check the play between the needle ❼ and the supporting steady ⓮. Adjust the steady by bending it to the play of 0,05mm. Once the stitching plate is fitted in, check the play between the needle ❼ and the stitching plate ⓰.

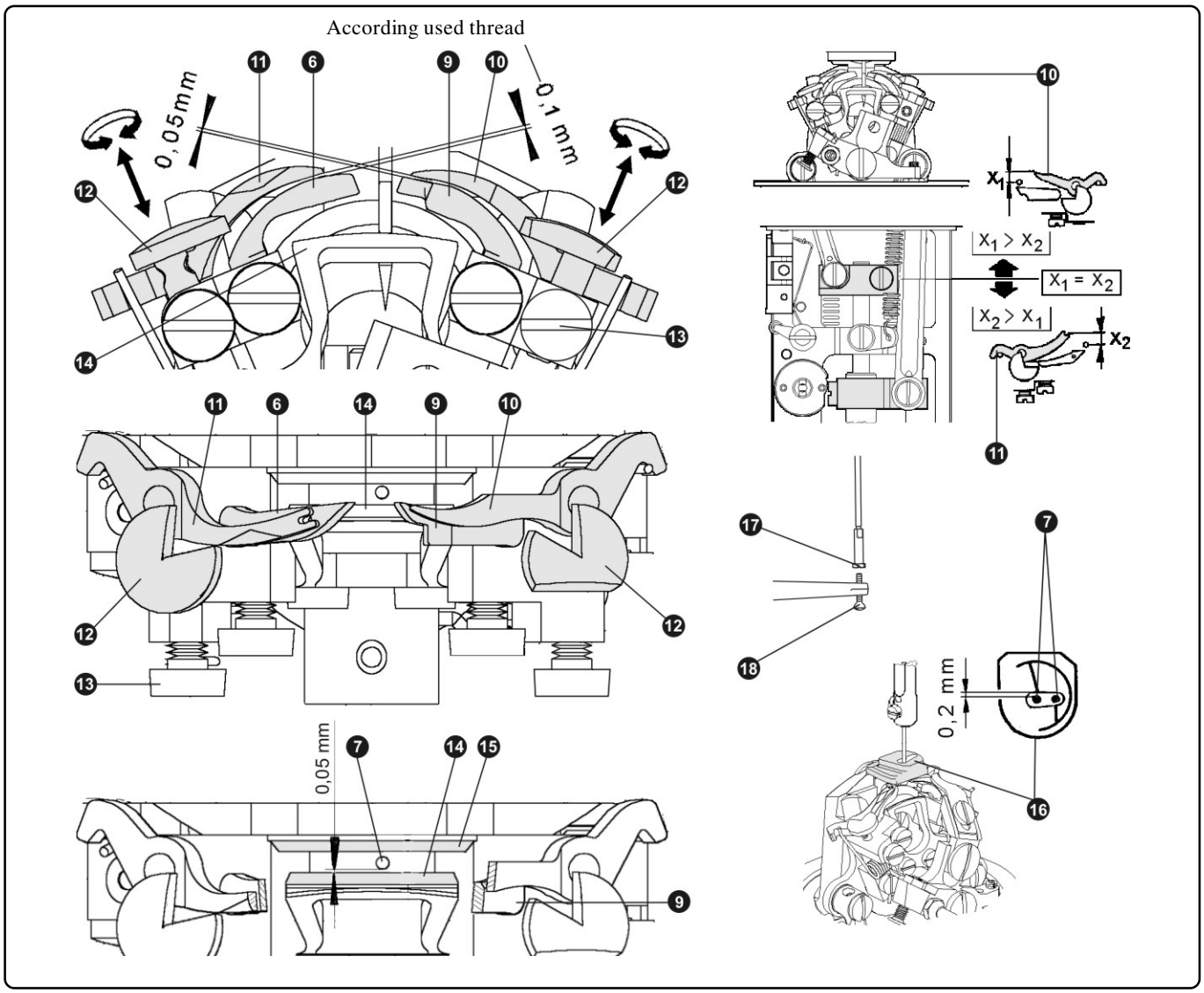

D - MACHINE ADJUSTMENT

9. UPPER THREAD TRIMMING

9.1. Once the holder with the trimming knife ❶ is fitted in again, adjust the height of the knife to reach the play of 0,1-0,15 mm above the right spreader ❹ and tighten the screw ❸. Once the stitching plate is fitted in, there must be some distance between the plate and the adjusted knife.

9.2. The basic angle adjustment of the trimming knife ❶ is done by the screw ❷ so that the left side of the knife leaves the groove in the stitching plate ❽. Adjsut the knife so that the knife edge overlaps the edge of the stitching plate of 2mm.

9.3. The position of the knife ❶ to catch the upper thread loop can be changed by loosing the screw ❺ so that the knife edge is 0,9 mm from the needle ❻. If the position of the knife changes, it is necessary to check the height – to keep the play as in part 9.1.

9.4. Adjsut the basic position of the actuator ❾ with the screw after loosing the nut ⓫, so that the distance from the arm ⓾ is 0,5 mm.

9.5. The trimming is adjusted by tilting the lever ⓭. Loosen the screw ⓬. Tilting the lever ⓭ further into the direction of the roll travel ⓮ will make the trimming mechanism action longer. If the lever ⓭ tilting into the direction of the roll travel ⓮ is smaller, the trimmenig mechanism action will be shorter.

WARNING: *Max*imal knife tilt ❶, is adjusted at the manufacturer. The trimming knife ❶ must not catch with its tip the bottom thread ❼.

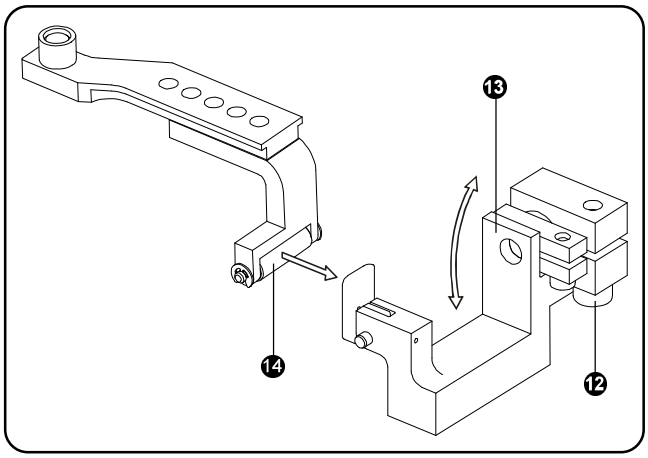

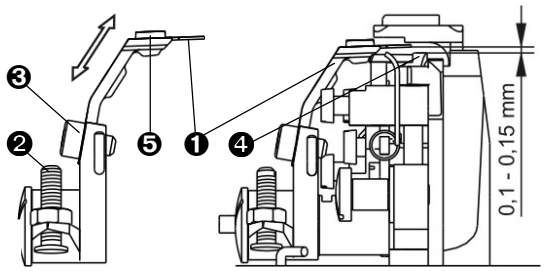

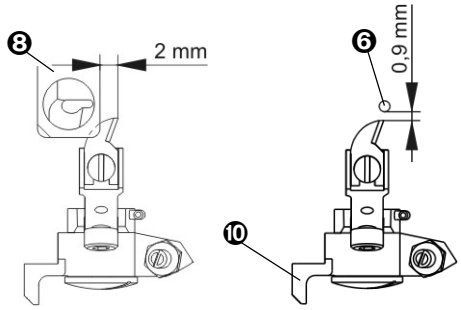

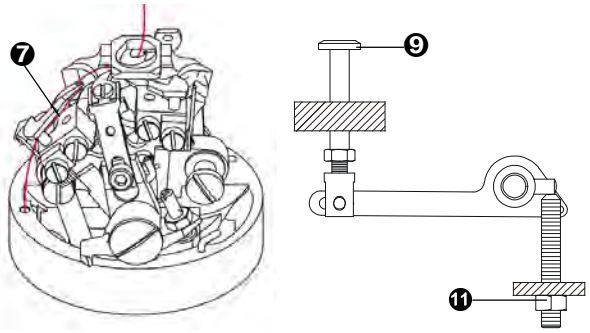

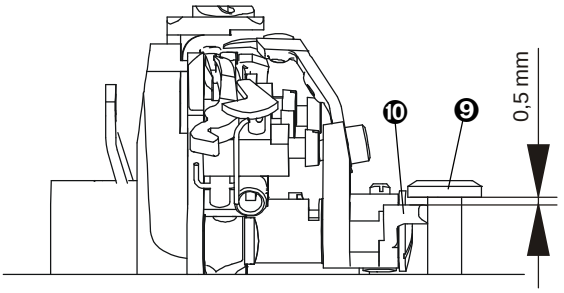

Position of looper during trimming
(sewing mechanism closed)

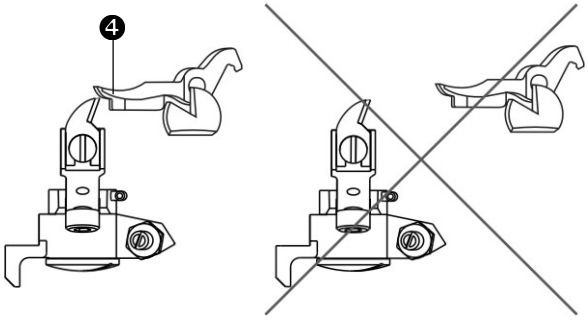

D - MACHINE ADJUSTMENT

10. UPPER THREAD TENSION

The amount of the thread required for sewing another buttonhole changes with the conditions and quality of the sewn workpiece. Thin materials usually require more thread at the beginning of sewing than thick materials. If more than one kind of fabric is being sewn, it is suitable to make the adjustment on the thinnest/lightest fabric.

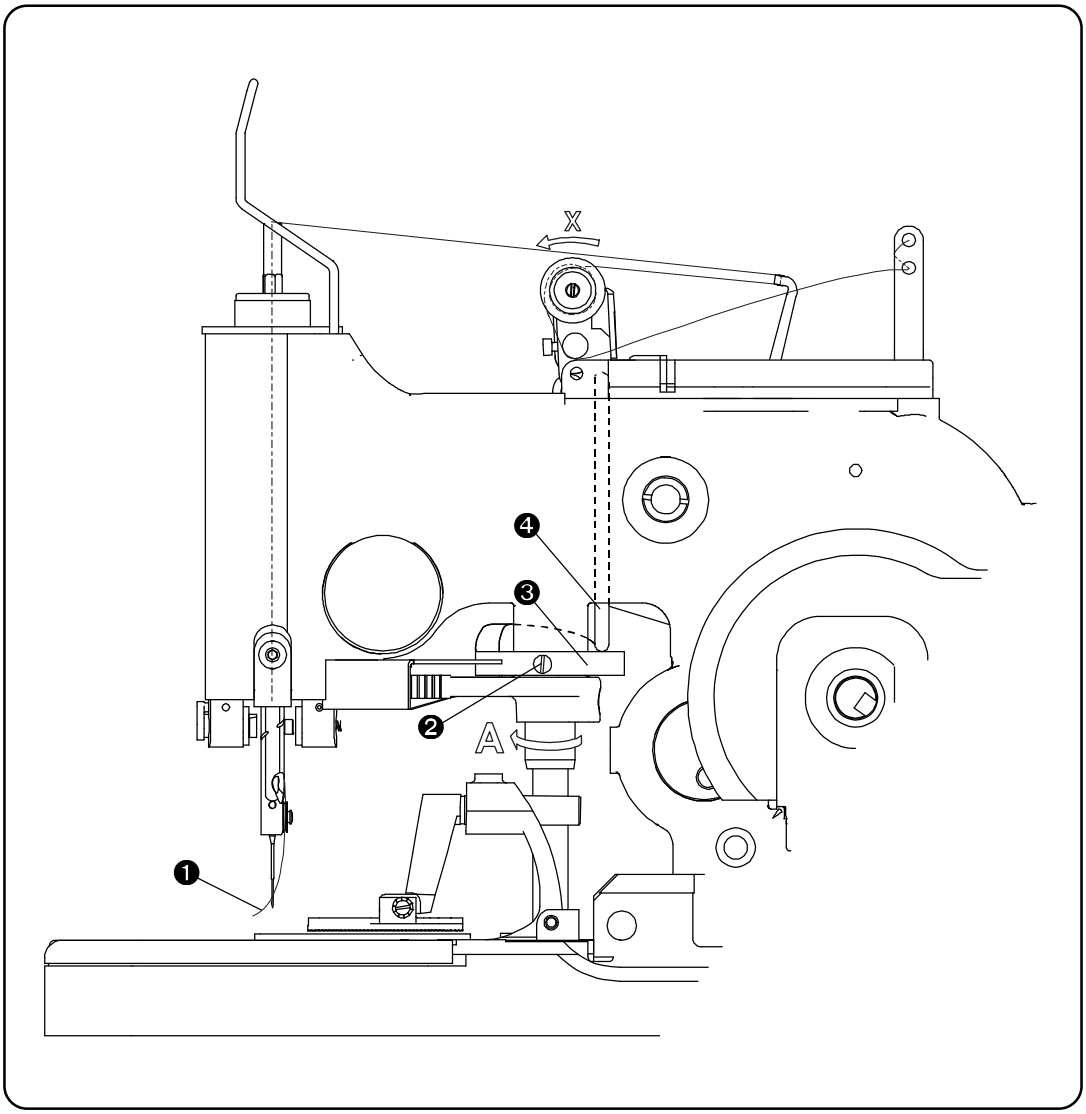

10.1. Thread tensioner tilts in the direction → X when the machine sews the buttonhole eye. Do the adjustment when ithe machine is in the home position. (When CA set up)

10.2. To obtain thread ❶ beginning as long as possible, loosen the screws ❷ and turn the cam ❸ all the way to the point with the pin ❹ at the cam stroke ❸. Then tighten the screws well ❷. To shorten the length of the thread ❶ at the beginning of sewing, adjust the position of the cam ❸ in the direction of the arrow A → as needed.

D - MACHINE ADJUSTMENT

11. SEWING SWITCH LEVER

11.1. Loosen the nut ❶ of the set screw ❷.

11.2. Screwing in → A will shorten the length of sewing the second row of stitches. Screwing out → B will lengthen the sewing of the second row of stitches. Secure the position with the nut ❶.

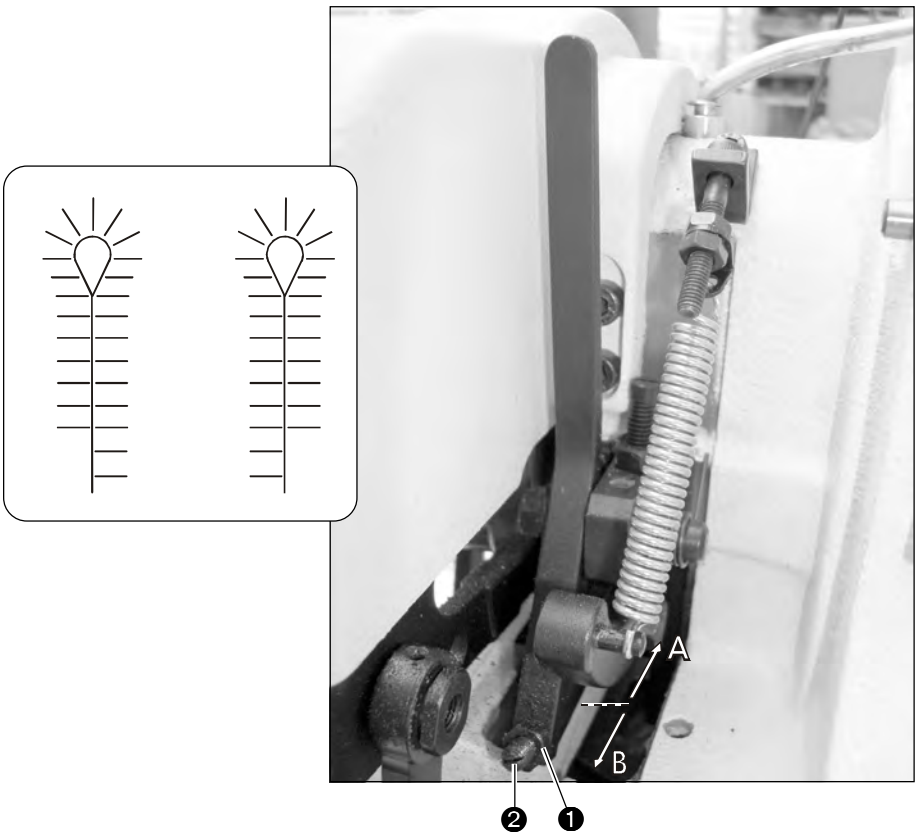

D - MACHINE ADJUSTMENT

12. CUTTING MECHANISM ADJUSTMENT

The starting point for the adjustment of the cutting mechanism is the needle mechanism and sewing mechanism. The method of adjustment depends on the placement of the knife; either into the cutting lever or into the cutting block. Cutting lever ❶ is fitted onto the shaft ❷ with a screw ❸. The axial play is adjusted with stops ⓬ secured with screws ⓫. The standard cutting is set up with the knife being fitted in the cutting block ❹ and cutting steel in the cutting lever ❶.

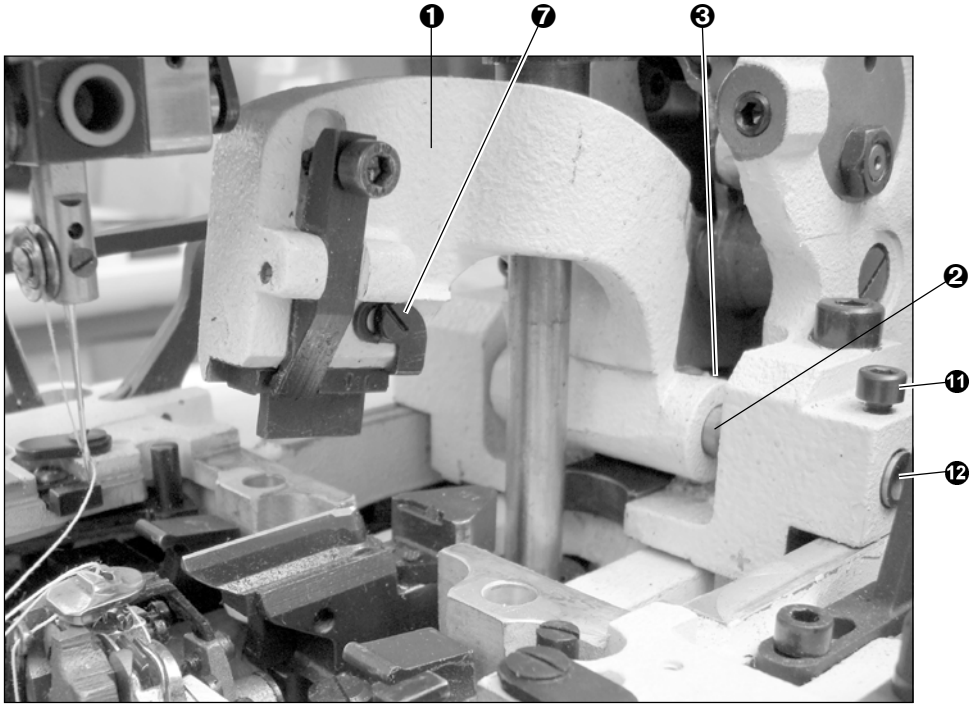

12.1. ***Adjustment of the knife fitted in the cutting block*** ❹ change the position in X axis once you loosen the screws ❺ Carefully turn the knife to the left or to the right as needed. Tighten the screws again.

12.2. ***Stopps in the cutting block*** ❹ ***and in the cutting lever*** ❸. Loosen the screws ❻ and ❼. Adjust the distance 49,5 mm from the top of the cut workpiece, it is 53,5 mm from the nose of the stops.

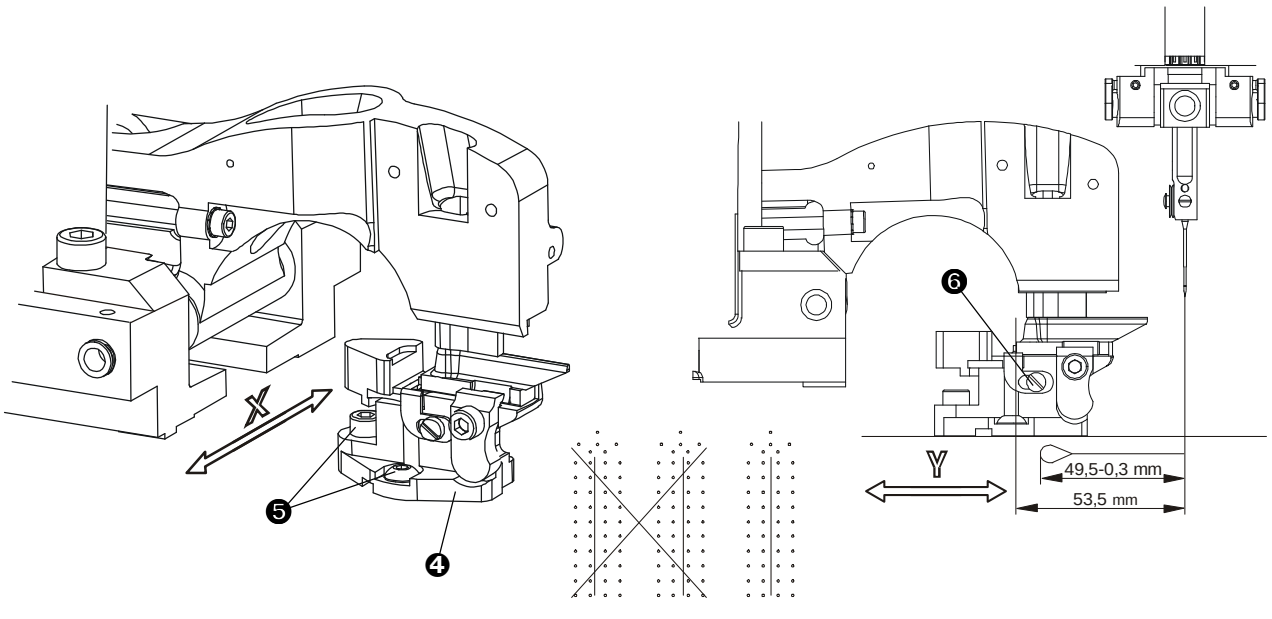

D - MACHINE ADJUSTMENT

12.3. Different types of knives (for straight buttonhole, buttonhole with eye) and cutting steels are replacable. Loosen the screws ❽ and ❾ and their clamps, replace the required part with a new one. Press those parts against each other and tighten the screws well. Cutting pressure is adjusted when changing cutting steels, cutting knives, or sewn fabric. Turn the screw ❿ clockwise to increase the pressure. The adjusted pressure must be as small as possible.

12.4. To find out, whether the cut is even, press the lever by hands onto the paper. The imprint must be even along the whole length. We do not recommend repairing damaged knives. Use a fine sandpaper or a grinding machine to clean the surface of the cutting steels that are worn out. Any grooves on the cutting steel can cause improper cut of fabric or can damage the cutting knife.

WARNING: danger of fast wear-out of the knife or even destruction of mechanism parts. When changing the knife or the cutting steel, recommend decreasing the pressure of at least three revolutions by the screw ❿ and increase progressively. It is necessary to check the cleanness of the cut. The pressure must not be too big that the drive belt slips.

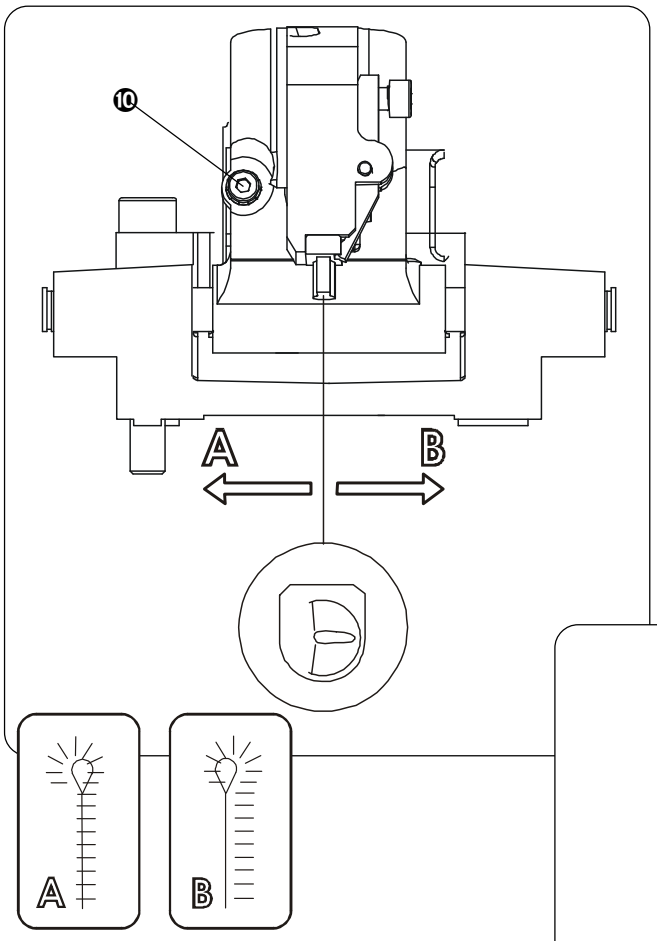

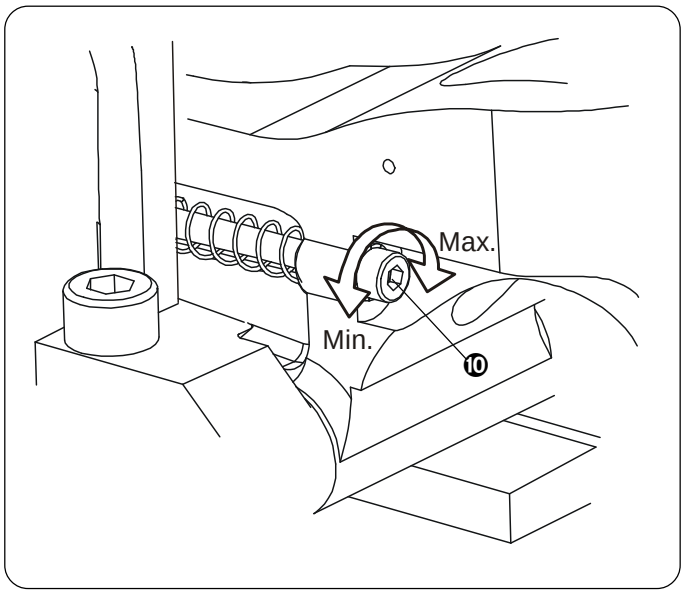

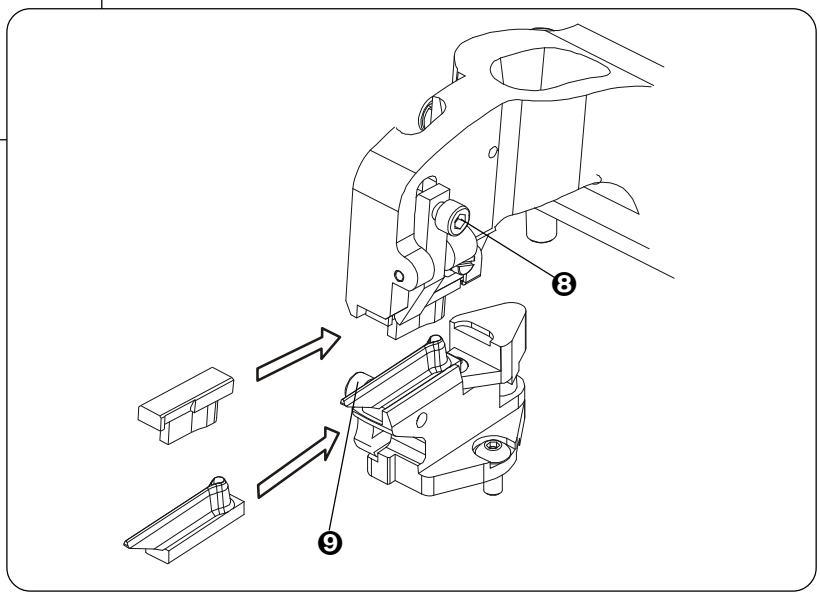

D - MACHINE ADJUSTMENT

13. ADJUSTMENT OF CLAMPING MECHANISM

13.1. The basic position of the clamp plates with clamp feet can be adjusted by turning the left hand wheel. The rolls ❶ on the knife holder wedge spreader and the clamp plates are spread. Loosing the screws ❷ make sit possible to adjust the stoppers ❸. The gap X should be same on both plates (asi 0,8 mm). Alignment of plates is adjusted by the stud ❹. Once it is loosen, check that the distance V is the same for both clamp plates from the knife cut.

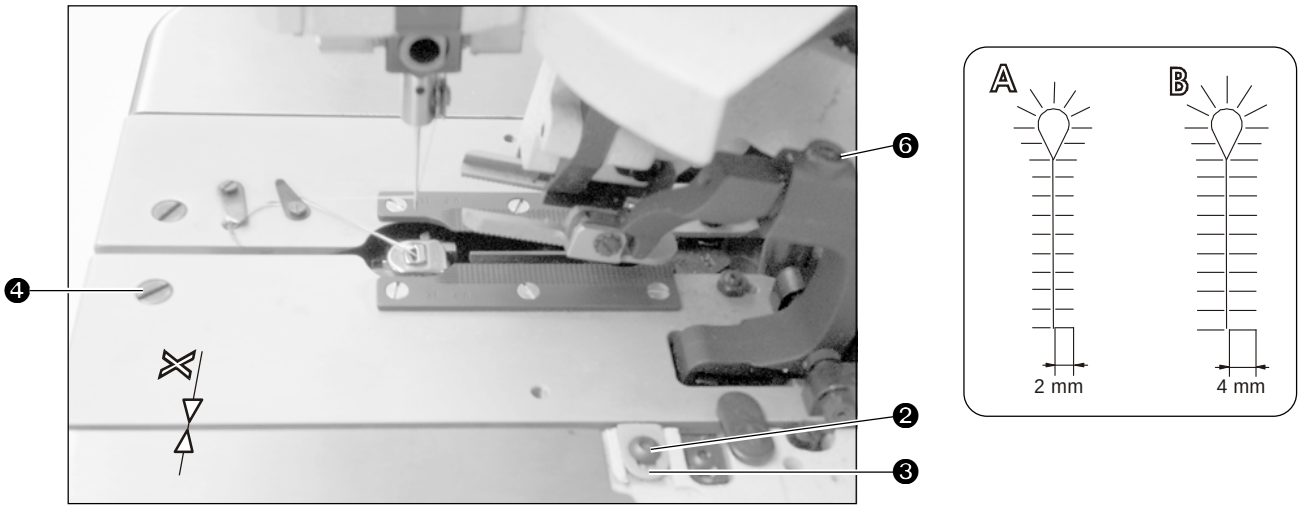

13.2. In order to prevent the needle hitting the clamp foot, it is possible to adjust the position of the foot by loosing the screws ❺ vertically onto the sewn buttonhole (the recommended gap between the foot and a row of stitches is 0,8 mm) and in longitudinal axis once you loose the screws ❻.

13.3. With its design, the clamping mechanism enables clamping material of different thickness. Clamp a piece of material manually with a lever ❼ to adjust the pressure. Use the hand wheel on the left side and turn the main cam so that the ramp ❽ lowers down the whole operating mechanism as much as possible. Loosen the stud nut ❿ to adjust its position with the screw ⓫, once you loosen the nut so that the lever ⓬ leans against the bottom square surface ⓯. Test the function.

13.4. Loosen the nut and adjust the height of the feet ⓮ above the plates ❾ 10 mm can be adjusted with a screw ⓭.

NOTE: It is suitable to check the function of the mechanism to adjust levers for both, cut after (CA) and cut before (CB) seaming.

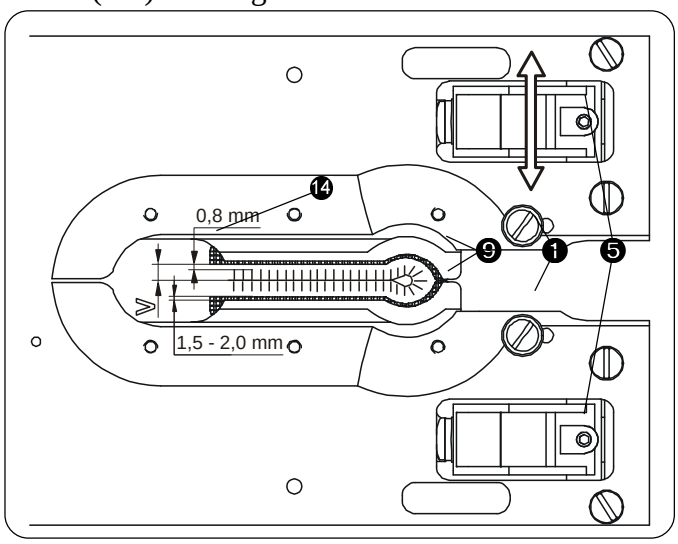

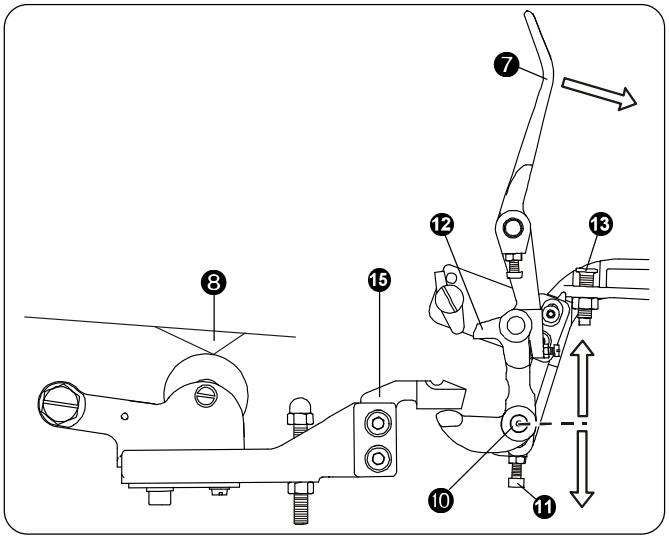

D - MACHINE ADJUSTMENT

13.5. Adjustment of safety latch – turn the left wheel. Once the machine is in the home position and feet levers release, the safety latch ⑯ should be above the groove placed on the tip of the square ⑮. To make adjustment, loosen screws ⑰ and move the support ⑲ upwards or downwards as necessary so that the latch ⑯ drops into the groove. Once the adjustment is done, tighten the screws ⑰. The minimal play required between the lever and the tip of the clamping arm is 0,8 mm. To adjust it, loosen the screw ⑰ and turn the eccentric nut as needed ⑱. Tighten the screws after the adjustment.

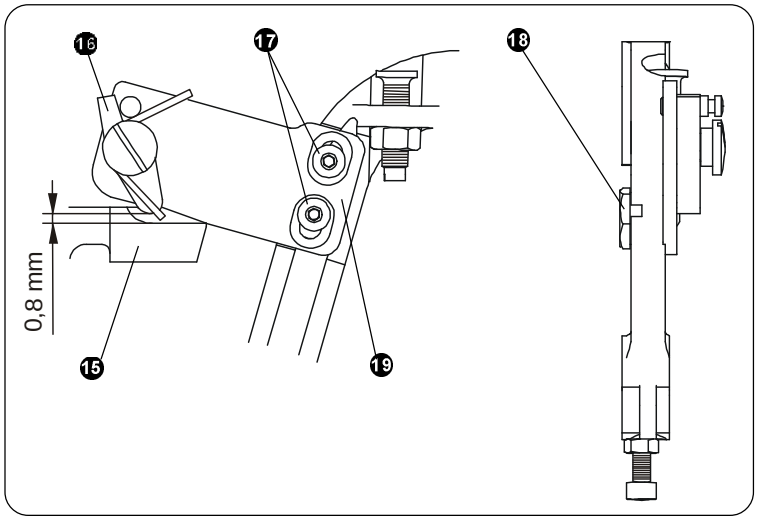

13.6. Selection of cut before (CB) or cut after (CA)

Changing CB for CA

1. Change the machine over from the home position (half of the sewing cycle).
2. Move the lever ⑳ that is placed on the left side in the rear part of the machine head into the **CA** position.
3. Loosen the screw ㉑ and move the guiding travel ㉒ backwards, to the **CA** position. Once the guiding travel is moved backwards, tighten the screw ㉑.

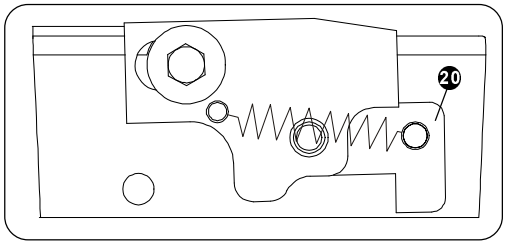

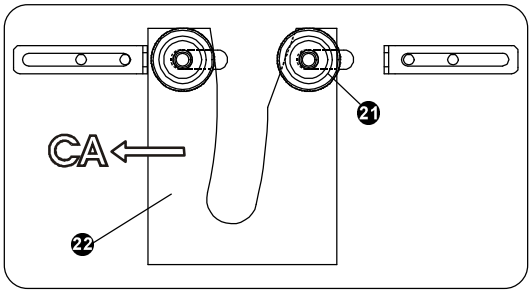

Changing CA for CB

1. Change the machine over from the home position (half of the sewing cycle).
2. Move the lever ⑳ that is placed on the left side in the rear part of the machine head into the **CB** position**.**
3. Loosen the screw ㉑ and move the guiding travel ㉒ forward, to the **CB** position. Once the guiding travel is moved forward, tighten the screw ㉑.

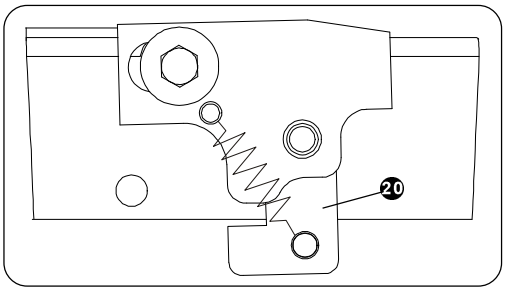

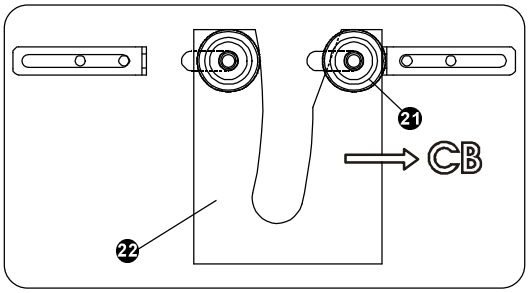

E - MAINTENANCE

WARNING: - Do not miss out regular maintenance work.
- If electricity supply is cut off, turn the main switch off.
- Do not damage, modify or remove the safety labels.
- Do not work on the machine intoxicated or impaired.

CAUTION: - Check electricity cables that they are not damaged.
- Check that all safety covers are in good condition. Replace damaged covers or order new ones!
- Never put your fingers into the sewing mechanism and needle area.
- Never modify the machine in a way that may endanger its safety.

1. MACHINE CLEANING AND MAINTENANCE

1.1 Switch the power supply off.

1.2 To clean and lubricate mechanisms, we need to remove the clamp plates to get access to the sewing mechanism. Turn the security latches ❶. Lift up the feet and move them onto you. Then tilt the back cover ❹.

1.3 Clean the sewing mechanism, guides and thread tensors from thread and fabric remains. It is possible to turn the sewing mechanism by the hand wheel on the right side of the machine. The machine head can be lifted and secure with the support controlled by this button ❺. Pressing the button ❺ will let the head be lowered down into the operation position.

CAUTION! When lowering the machine head, lift up the machine a little bit by resting your hand on the front cover ❼. Watch your fingers! Injury hazard!

1.4 Lubricate the machine as in Section E3

1.5 Once the inspection and service is finished, close the cover ❹, while the head is tilted into operational position, insert and secure the clamp plates with latches ❶. Now you can continue working.

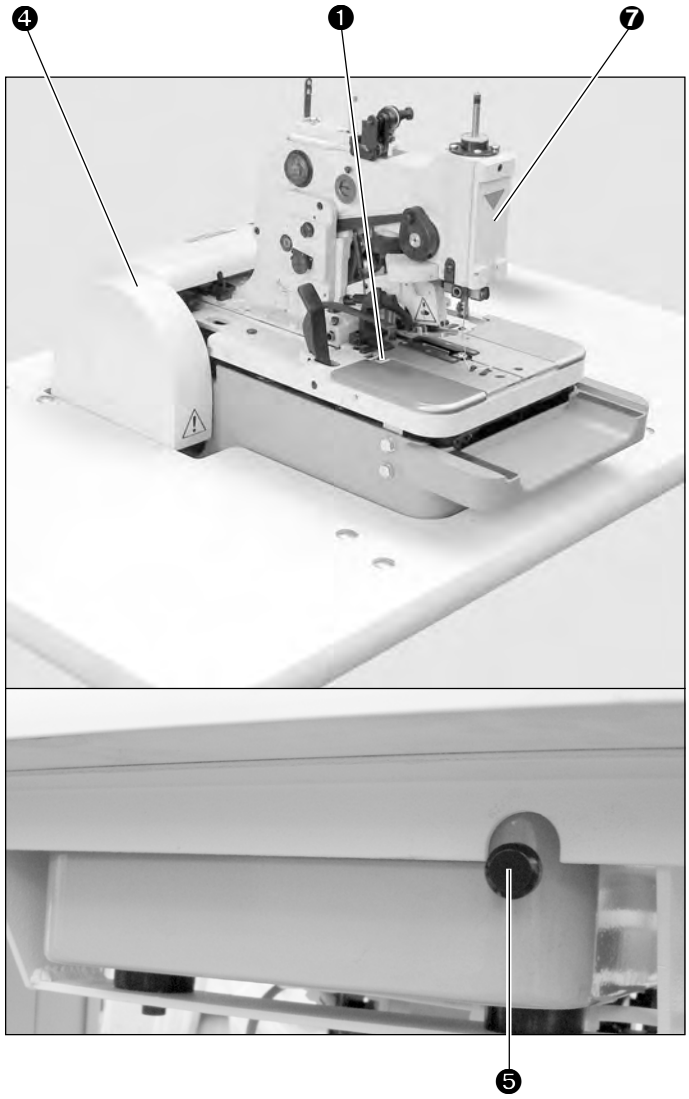

E - MAINTENANCE

2. SUMMARY OF MAINTENANCE

Once a day (10 hours) - visual inspection
- cleaning sewing mechanism area and inside the machine frame

WARNING: If the waste hole in the knife or cutting block ❶ block, the knife breaks.

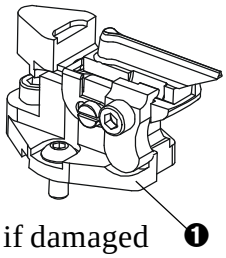

Once a week (80 hours) - visual inspection of outside and inside mechanisms
- lubrication of needle bar and sewing mechanism
- filling up oil into the oil tank with an oil gauge
- checking belt tension
- checking cutting knife and cutting steels, change parts if damaged
- checking operation of stop mechanism, especially brakes
- checking stitch plate wear out, exchange if necessary

Once a month (300 hours) - checking clearances in the sewing mechanism drive
- checking screw joinings (keep the values stated below)

Recomended values of screw tightening (Nm)

M3	0,5	0,6	0,8
M4	1,2	1,5	2,0
M5	2,5	3,0	4,0
M6	4,0	5,0	7,0
M8		8,0	16,0
M10		10,0	30,0

E - MAINTENANCE

3. MACHINE LUBRICATION

Before the machine is switched on for the first time, all preservative oils must be removed. It is also necessary to lubricate all areas shown below. This must be done when the machine is not used for some time too.

3.1 The machine is equipped with group lubrication system, which lowers demands for maintenance. There are red spots indicating areas that need to be lubricated. Those areas must be lubricated at least 1-2 times per week. The manufacturer recommends using lubrication oil ESSO TERESSO 32 or other oil of similar characteristic.

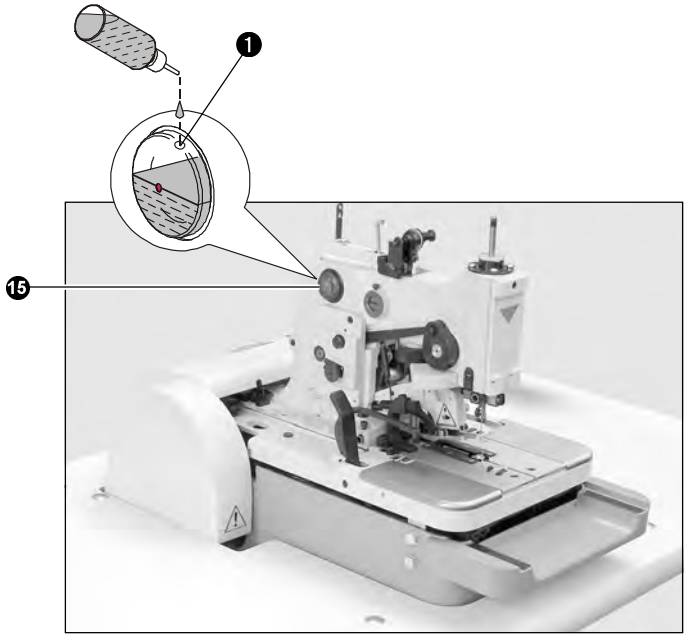

3.2 The quantity of oil in the oil tank ⓯ with an oil gauge is shown by a red mark. Too much oil can leak out. Fill the empty oil tank with approximately 10 cm^3 of oil through the filling hole ❶.

3.3 Needle bar lubrication is done after loosing the screw ❸ and after removal of the cover ❷. Pour a few drops of oil onto the needle bar ❺ above the bearing ❹, into the centre of the needle bar ❺ where the spiral lubrication groove is, into the gap between washers ❻ and onto the flat bite body ⓮. Fitt the cover ❷ again.

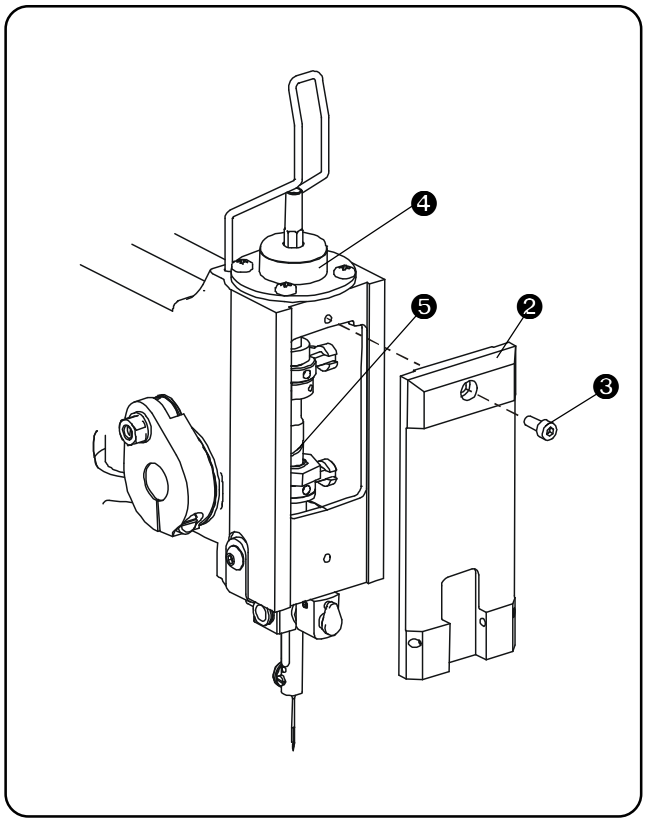

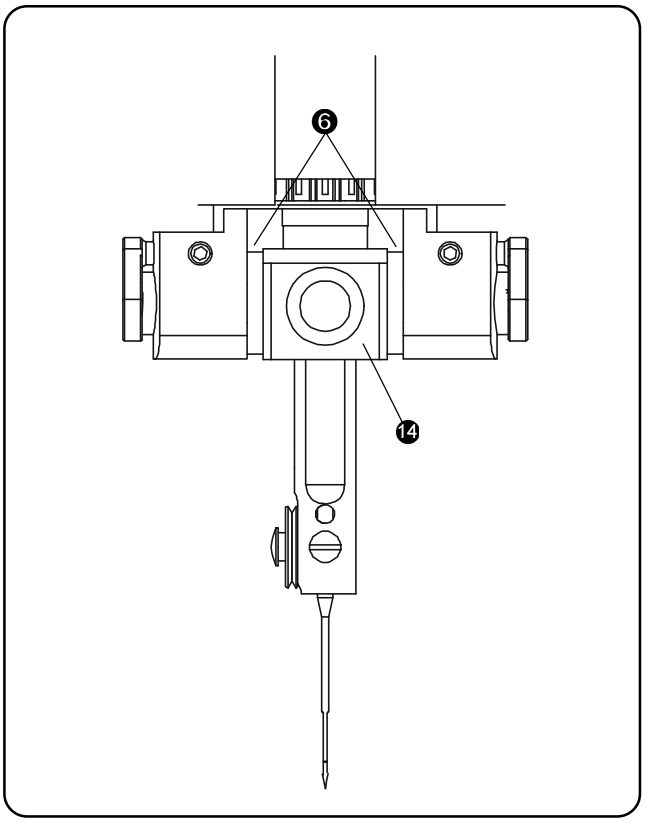

E - MAINTENANCE

3.4 Remove the clamp plates as stated in section E2 ad) 2 and lubricate the drawbar case ❼ and ❽, spreader fasteners ❾ and ❿, looper spreader stud ⓫, drive drawbar ⓬ and ⓭ 1-2 drops of oil onto the areas market in the drawing. (marked in red color on the machine). To get better access to the drive drawbar, tilt the machine head after opening the back cover.

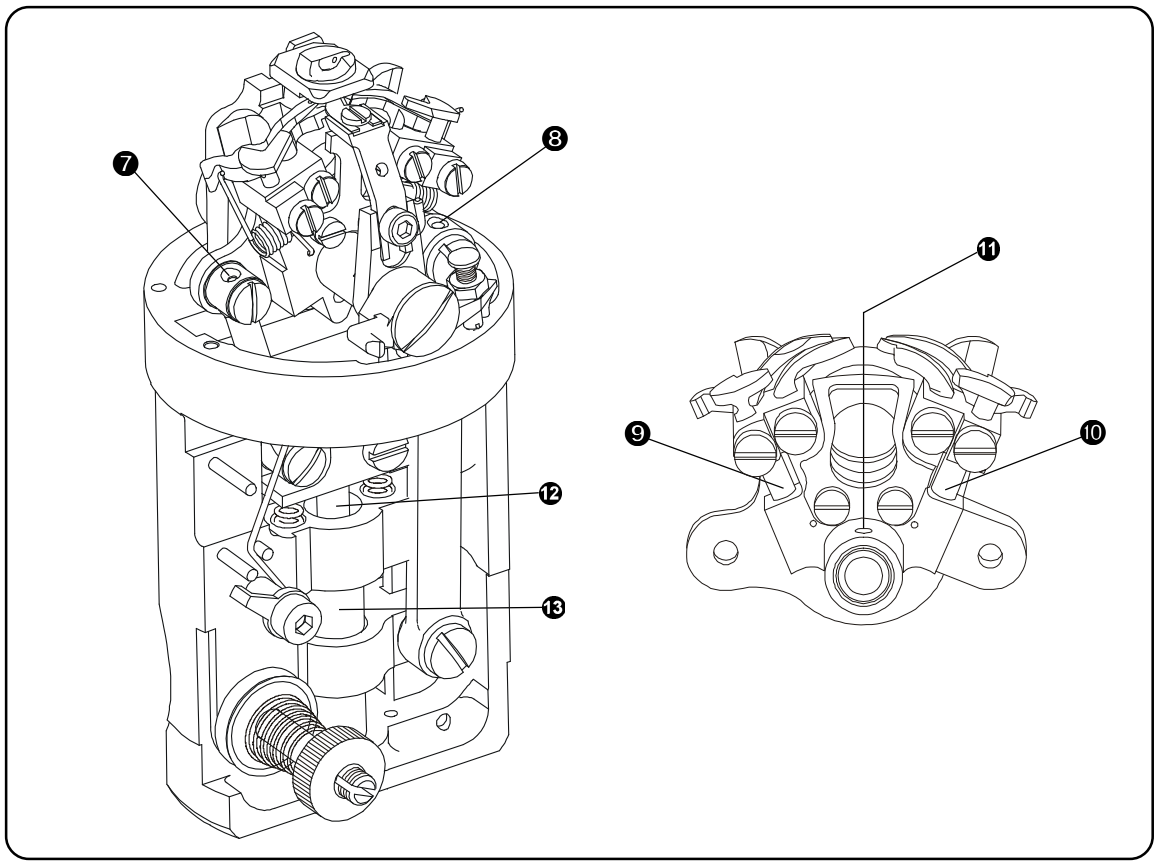

3.5 Check the machine for further lubrication. Pour 1-2 drops into each place marked with red color. Pay your attention especially for sewing cam, feeding mechanism, side needle bite, drive shaft, cutting lever case and other moving parts.

3.6 Make at least 10 buttonholes on a scrap piece of material after lubrication to eliminate the possibility of making oil stains on a workpiece; wipe off visible remains of oil.

3.7 Put all removed parts back onto the machine, secure the clamping plates.

4. DISPOSAL PROVISIONS

4.1 To ensure ecological disposal of machines, it is important to remove nonmetal parts from the machines. Once they are removed, it is necessary to dismantle covers, machine arm and pull it out from the frame.

4.2 Aluminum and hard aluminum parts, non-ferrous metals and plastic parts must be processed differently.

4.3 The parts mentioned in article 4.2 are marked in the manual as follows:

- ● Aluminum and hard aluminum parts
- ●● Non-ferrous metals parts
- ●●● Plastic and non-metal alloys

TROUBLESHOOTING

TABLE OF CONTENS

Page

1. INTRODUCTION 2-2

2. MACHINE DRIVE AND ADJUSTING FAULTS 2-3

3. SEWING FAULTS 2-4

4. APPEARANCE DEFECTS ON SEWING BUTTONHOLE 2-6

TROUBLESHOOTING

1. INTRODUCTION

Warning! Inspect the machine on regular basic and use only quality parts. The manufacturer recommends usin original AMF Reece parts, especially needles, loopers, spreaders, and throat plates.

Adjustment quick reference list

Note: Required machine setting is variable according to the fabric and thread variations used. The type of thread and fabric will affect the amount of wear on machine parts. The components marked in yellow are set by manufacturer and do no require further adjustments. Changing the position of components marked in yellow, without the approval of the manufacturer, may cancel the warranty.

To obtain the highest quality buttonhole maintain the following values:

- clearance between the needle and the loopers is 0,05-0,1 mm (0,002-0,004")
- clearance between the needle and the needle support is 0,05-0,1 mm
- the same distance of the left spreader tip and the right spreader tip when they pass the needle
- left and right looper on the centre of the needle when the stroke is 2,9 mm from the lowest possition
- with the needle bar in the lowest position, the axial clearance is 0,25 mm, (0,010"), when the pressure power is 5N
- with the needle bar in the lowest position, the radial clearance is, (0,002"), when the pressure power is 5N
- looper holder axial clearance is 0,05-0,1 mm (0,002-0,004")
- looper holder radial clearance is 0,1-0,2 mm (0,004-0,008")
- looper holder angular clearance is 1,2 on the arm 28,5 mm when the pressure power is 5N

TROUBLESHOOTING

2. MACHINE DRIVE AND ADJUSTING FAULTS

SYMPTOM	POSSIBLE CAUSE	POSSIBLE SOLUTION	SERVICE SECTION
Motor fails to start	No power to the motor	Check electrical plug and wiring	
	Incorrect voltage	Check with a voltage meter	
	Electrical equipment defect	Check: a) main switch b) fuses c) emergency stop switch	**B - 4**
The machine fails	Incorrect motor rotation	Change the plugs	
	Missing left belt	Replace the belt	**B - 6**
	Carriers dogs are disengaged	a) Replace drive lever spring 01.5015.0.000 b) Correct the idler pulley travel	
	Carriers dogs are broken	Replace 17.0033.5.113	
	Idler pulley collar clamping screw loose	Correctly position the collar and tighteen the screw	
	Incorrect pressure on starting lever	Adjust pressure on the spring 01.5019.0.000	
Motor started and ran for a short period, then stopped	Excessive cutting pressure	Re-adjust cutting pressure	**D - 13**
	Stitch mechanism is not rotating	Ensure the drive mechanism releases correctly	
	Left belt tension is not correct	Re-adjust tension	**B - 4**
Machine fails to stitch and stop	Incorrect stitch lever function	Correctly adjust the stitch lever	
	Locked stitch mechanism	Unlock and correctly adjust	
Machine fails to stitch, but completes the cycle	Weak stitch lever spring	Replace the spring 17.0026.3.126	
	Faulty stitch lever bumper	Replace the bumper 11.2016.0.000	
	Faulty clamp lever spring	Replace the spring 17.0026.3.126	
Machine fails to stop stitching	Incorrect stop mechanism function	Correctly adjust the pressure	**D - 3**
	Damaged stop mechanism teeth	Replace or correctly adjust	
	Broken tension spring	Replace 01.5055.0.000	

TROUBLESHOOTING

SYMPTOM	POSSIBLE CAUSE	POSSIBLE SOLUTION	SERVICE SECTION
Machine fails to reach the end position	Breaking belt tension too tight	Correctly adjust the pressure	
	Fast feed pulley stick	Make pulley motion loose	
	Damaged carrier dog	Replace 17.0033.5.113	
	Excessive cutting pressure	Correctly decrease the cutting pressure	**D - 13**
Machine fails to stop, but repeates the cycle	Damaged or weak starting lever spring	Replace the spring 01.5020.0.000 or increase the pressure	
	Switching start lever	a) Increase the spring pressure b) Replace the spring 01.5019.0.000	
	Incorrect adjusting roller setting	Correctly adjust the roller (CA/CB)	**D - 14**
Knocking noise at the machine start	Incorrect adjusting roller setting	Correctly adjust the roller (CA/CB)	**D - 14**
	Loose carrier dog	Tighten the carrier dog	
	Pulley collar incorrectly set for high speed table travel	Correctly adjust the pulley collar	
Machine fails to clamp material or release the material too soon	Incorrect clamps mechanism setting	Correctly adjust the mechanism	**D - 14**
Machine fails to release material	Incorrect adjusting roller setting	Correctly adjust the roller (CA/CB)	**D - 14**
	Clamp disengagement incorrectly adjusted	Re-adjust clamp	
Uneven clamp feet pressure	Rocker lever bearing screw loose	Tighten and adjust the screw	**D - 14**
	Drive member loose or damaged	a) Replace b) Tighten the screws	
Machine fails to cut material	Damaged knife	Replace	
	Damaged cutting steel	Repair or replace	
	Incorrect cutting pressure	a) Increase the cutting pressure b) Replace the tracing finger 17.0062.5.149	**D - 13**
	Damaged cutting lever	Replace 11.1068.0.000	
	Loose machine frame screws	Tighten the screws	
Cutting lever fails to return	Faulty extension spring	Replace 01.5006.0.001	
	Stagnation on shaft	a) adjust the axial play b) lubricate	**D - 13**

TROUBLESHOOTING

3. SEWING FAULTS

SYMPTOM	POSSIBLE CAUSE	POSSIBLE SOLUTION	SERVICE SECTION
Skipping stitches	Incorrectly installed needle	Replace the needle	**C - 2**
	Wrong threading	Adjust	**C - 3**
	Incorrect thread tension	Adjust the thread tension	**C - 3**
	Bent needle	Replace	
	Clearance in sewing drive	Adjust	
	Excessive looper to needle clearance	Adjust the clearance	**D - 8**
	Incorrectly adjusted stitch mech.	Adjust the stitch mechanism	
	Damaged loopers or spreaders	Clean and repolish the damaged areas, eventually replace	
	Wear or damaged stitch plate	Replace	
	Weak reverse spring on spreaders	Replace	
	Excessive clamp foot to needle entry point clearance	Adjust to 1 mm	**D - 14**
	Incorrect clamping	Pressure and adjustment checking	**D - 14**
	Not even spreading - loose fabric	Adjust	**D - 14**
	Elastic material	Adjust the sewing mechanism	
Skipped stitch at the sew start	Sew start thread lenght too short	Ensure the thread is clamped firmly	
	The fork of left spreader is out of the looper hole	Adjust the left spreader position	**D - 9**
	Incorrect right looper timming	Adjust the right looper timmig	**D - 9**
	Big clamp distance from sewing	Adjust to max. 1 mm	
	Damaged or bent looper	Replace	
	Incorrect thread tension	Adjust the thread tension	**D - 11**
Removing stitches at the end of the sewing	Incorrect upper thread tension release	Correct the upper thread tension release	
	Damaged right looper	Replace the looper 11.4004.0.000	
	Damaged throat plate hole	Replace the throat plate	
	Incorrect right looper and needle timming	Correct the right looper and needle timming	**D - 8**

TROUBLESHOOTING

SYMPTOM	POSSIBLE CAUSE	POSSIBLE SOLUTION	SERVICE SECTION
Breakage of upper thread	Incorrect threading	Correct it	C - 3
	Excessive thread tension	Adjust optimal	D - 11
	Incorrect threads (week, asleep)	Use firmed threads	
	Damaged thread guide	Repair or replace	
	Incorrectly installed needle	Correctly install the needle	C - 2
	Damaged needle	Replace	
	Damaged loopers (spreaders)	Repair or replace	
	Needle hits the throat plate	Adjust	C - 2
	Needle and looper touch (contact)	Adjust the clearance	
	Incorrectly adjusted trimming knife	Adjust it optimal	
Breakage of lower thread	Incorrect threading	Correct it	C - 3
	Excessive thread tension	Adjust it optimal	
	Damaged needle	Replace	
	Left spreader has axial play	Adjust	
	Damaged left spreader	Repair or replace	
	Damaged threads guide	Check - replace damaged part	
	Incorrectly adjusted trimming knife	Adjust it optimal	
Needle breakage	Weak needle	Use properly needle	
	Needle contact the clamp foot	Adjust the play between the needle and clamps	
	Needle contact the looper or spreader	a) Adjust the play between the needle and loopers b) Adjust timming of sewing	
	Needle support too far	Bent for 0,3 mm max.	
	Sewing stop not adjusted	Check adjutment	
	Incorrectly adjusted needle bar height	Adjust correctly	
	Incorrectly adjusted trimming knife	Adjust optimal	

4. APPEARANCE DEFECT ON SEWING BUTTONHOLE

Buttonhole quality fluctuating	The functional an aesthetic of a buttonhole can be influenced by the following factors:		
	Density of stitches	See appropriate adjustment	
	Number of stitches in eye		
	Size of material spreading		
	Sewing distance from buttonhole		
	Upper and lower thread tension		
	Used threads		

TROUBLESHOOTING

SOLUTION	POSSIBLE CAUSE	POSSIBLE SOLUTION	SERVICE SECTION
Not even parallel sides	Clamp plates wrong position	Adjust	**D - 14**
	Knife outside the centre	Adjust	**D - 13**
	Not even spreading	Adjust	
	Not even clamp pressure	Adjust	
	Bent needle	Replace	
	Loose cam brakes	Adjust	**D - 4**
Cutting of stitching fails	Bent needle	Replace	
	Low thread tension	Tighten tension	**D - 11**
	Incorrect needle axis	Adjust	
	Incorrect clamping or unsymmetric clamp pressure	a) Check pressure b) Increase pressure	
	Knife outside the buttonhole centre	Adjust position	**D - 13**
Eye is deformated	Incorrect sewing mechanism rotation adjustment - start or angle	Adjust	
	Incorrectly adjusted pin on lever of eye shape	Adjust	
	Incorrect spreading	Adjust, reduce spreading to 0,2 mm	
	Throat plate is too low or hits to clamp plates	Lift up to clamp plates position, for 3 mm lower as maximum	
	Knife outside the buttonhole centre when cutting before stitching	Adjust the knife surface	**D - 13**
Stitches are not regular	Loose brakes	Adjust	**D - 4**
	Feeding clutch worn out	Replace single direction clutch	