SiRUBA®
銀翁牌工業用縫紉機
INDUSTRIAL SEWING MACHINE

L818F-RM1

零件圖 PARTS LIST



CE

高林股份有限公司
KAULIN MFG. CO., LTD.

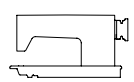		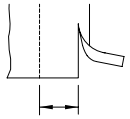	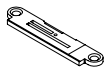						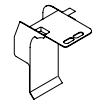			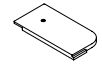
MODEL	SUB-CLASS	GAUGE WIDTH	NEEDLE PLATE	FEED DOG	PRESSER FOOT	HOOK ASM	BOBBIN CASE ASM	BOBBIN	THROAT PLATE CHIP GUARD	NEEDLE	THREAD GUIDE	THROAT PLATE COVER
機 型	規 格	切邊距離	針 板	送 具	押 具	梭 頭	梭 殼	梭 子	下導布架	針 號	導線片	布板蓋
L818F-RM1-32	32	1/8" (3.2mm)	E705Q	D705	P705	G111	G201	G301	LR104DS	DB*1#14	LR141S	LR106
L818F-RM1-40	40	5/32" (4.0mm)	E705R (E705Q)	D705	P705	G111	G201	G301	LR104DS	DB*1#14	LR141S	LR106
L818F-RM1-48	48	3/16" (4.8mm)	E705 (E705Q)	D705	P705	G111	G201	G301	LR104DS	DB*1#14	LR141S	LR106
L818F-RM1-64	64	1/4" (6.4mm)	E705S (E705Q)	D702 (D705)	P701 (P705)	G111	G201	G301	LR104D (LR104DS)	DB*1#14	LR141 (LR141S)	LR106S (LR106)
L818F-RM1-95	95	3/8" (9.5mm)	E705T (E705Q)	D702 (D705)	P701 (P705)	G111	G201	G301	LR104D (LR104DS)	DB*1#14	LR141 (LR141S)	LR106T (LR106)

規格件表 CONVERSION CHART

PARTS LIST FOR LA GROUP

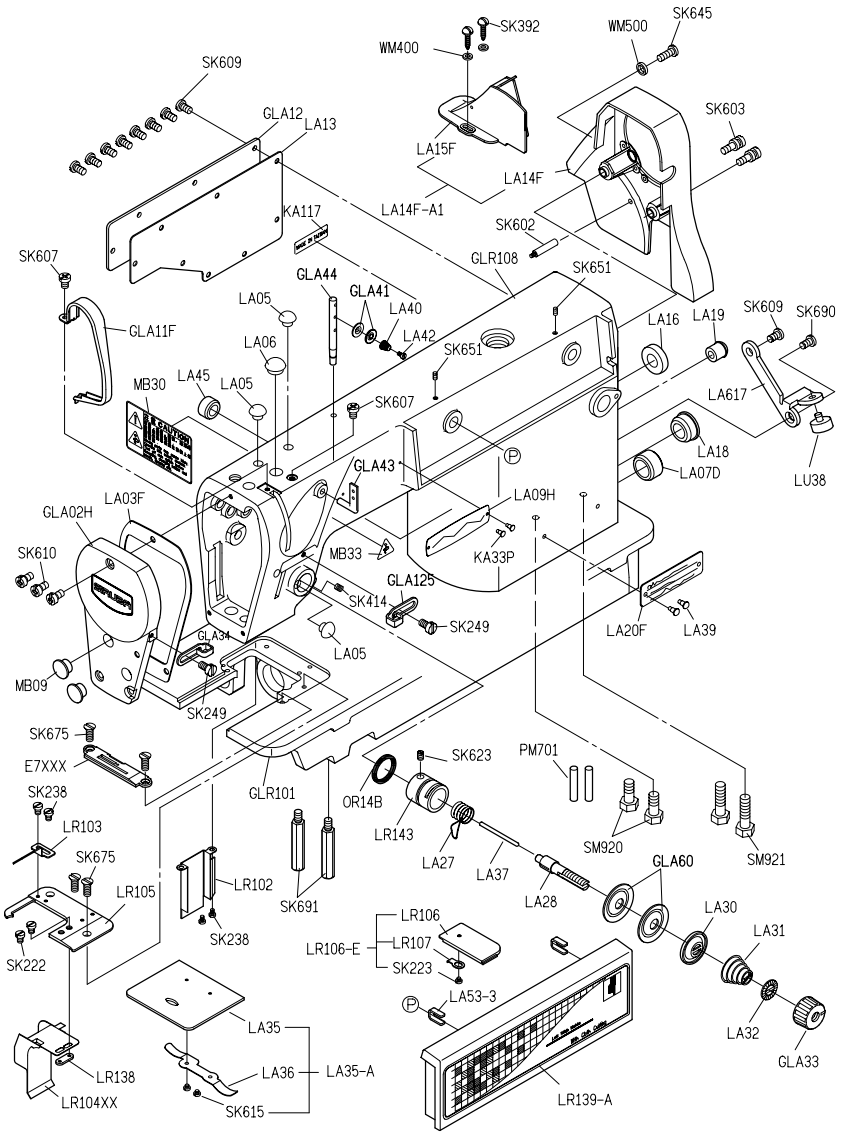

PARTS LIST FOR LB GROUP

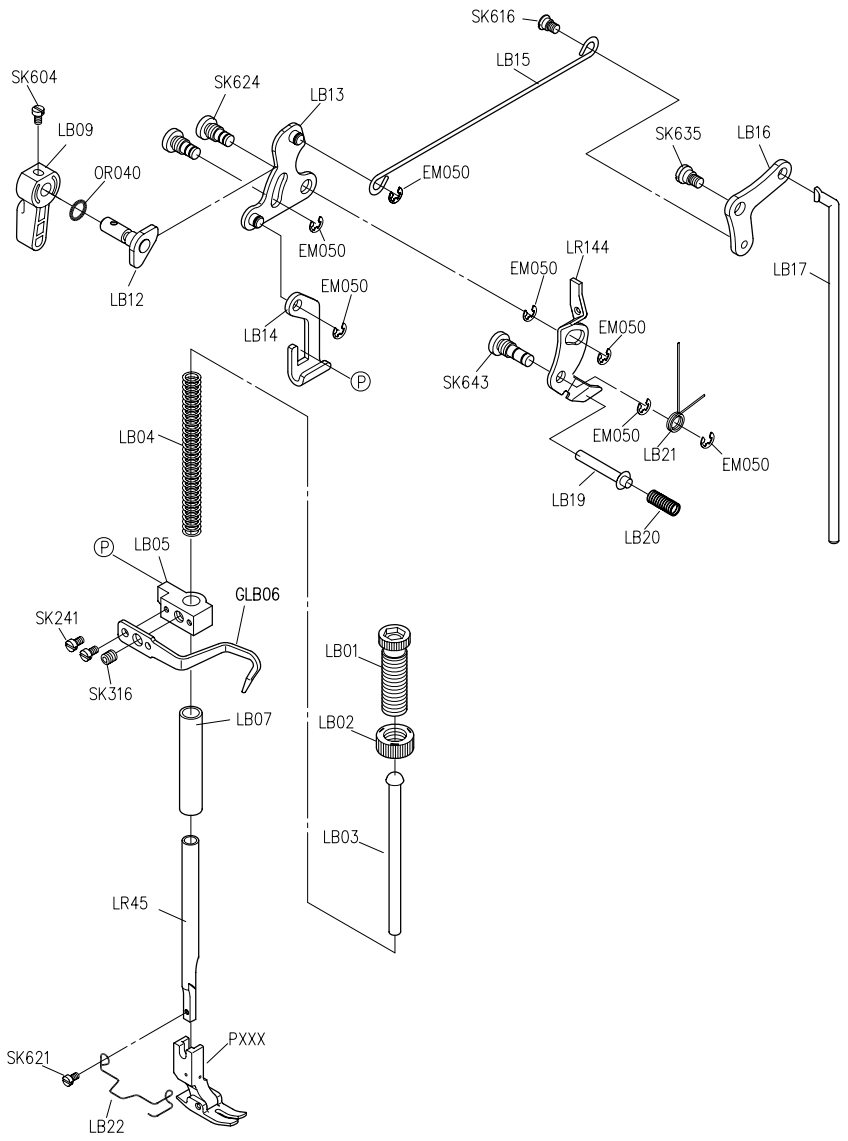

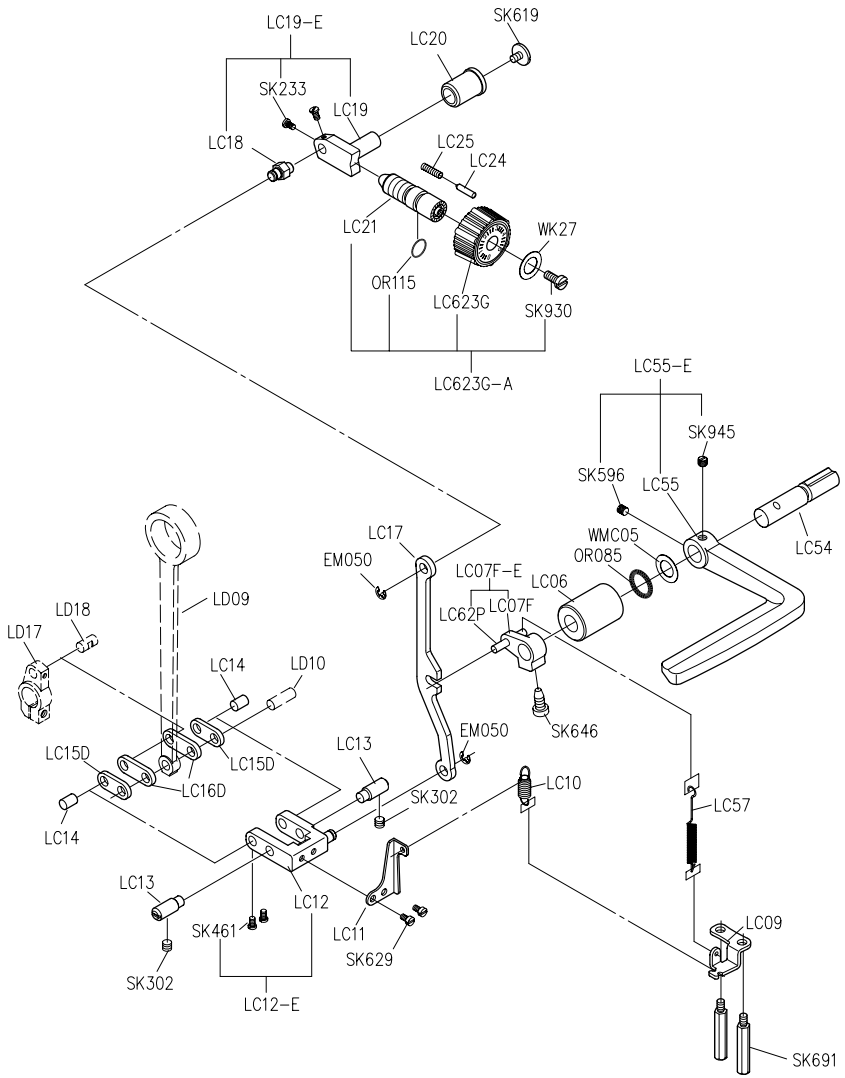
LC19-E
SK619
LC20
SK233
LC19
LC18
LC25
LC24
LC21
WK27
OR115
LC623G
SK930
LC623G-A
LC55-E
SK945
SK596
LC55
LC54
LC17
EM050
WMC05
OR085
LC07F-E
LC06
LC62P
LC07F
LD18
LD17
LD09
LC14
LD10
LC15D
LC16D
LC13
EM050
SK646
LC10
LC57
SK302
LC14
LC13
LC12
LC11
SK461
SK629
LC09
SK302
LC12-E
SK691

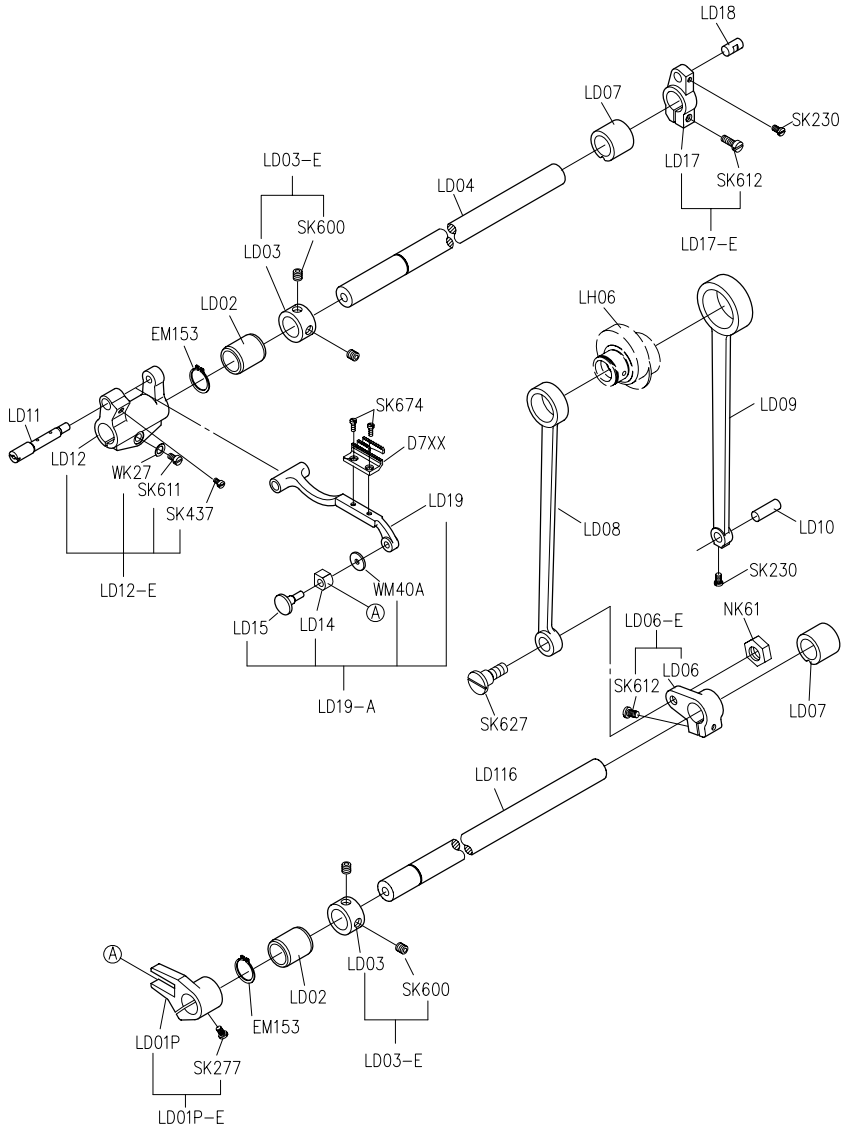
LD18
LD07
SK230
LD03-E
LD04
LD17
SK612
SK600
LD03
LD17-E
LD02
EM153
LH06
LD09
LD11
SK674
D7XX
LD12
WK27
SK611
SK437
LD19
LD08
LD10
SK230
LD12-E
WM40A
LD15
LD14
LD19-A
LD06-E
NK61
SK627
LD06
SK612
LD07
LD116
LD03
SK600
LD02
EM153
LD01P
SK277
LD03-E
LD01P-E

PARTS LIST FOR LE GROUP

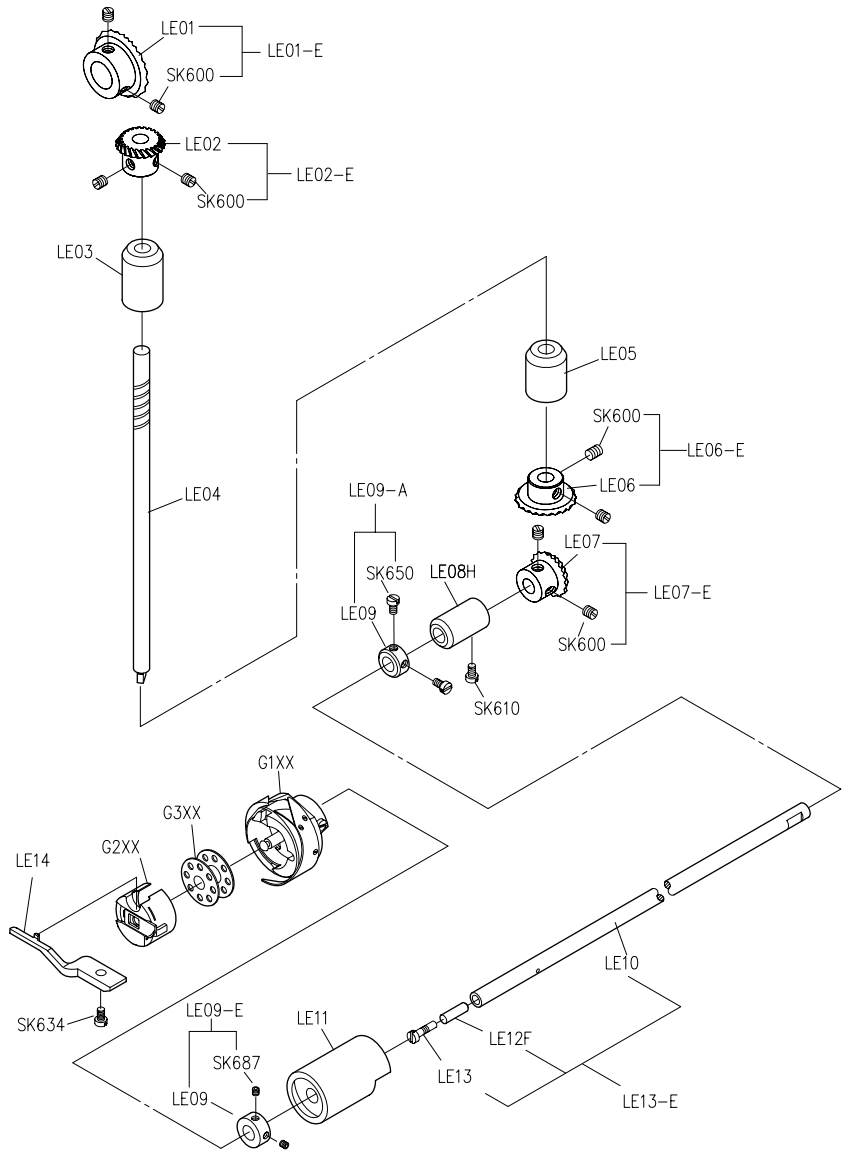

PARTS LIST FOR LG GROUP

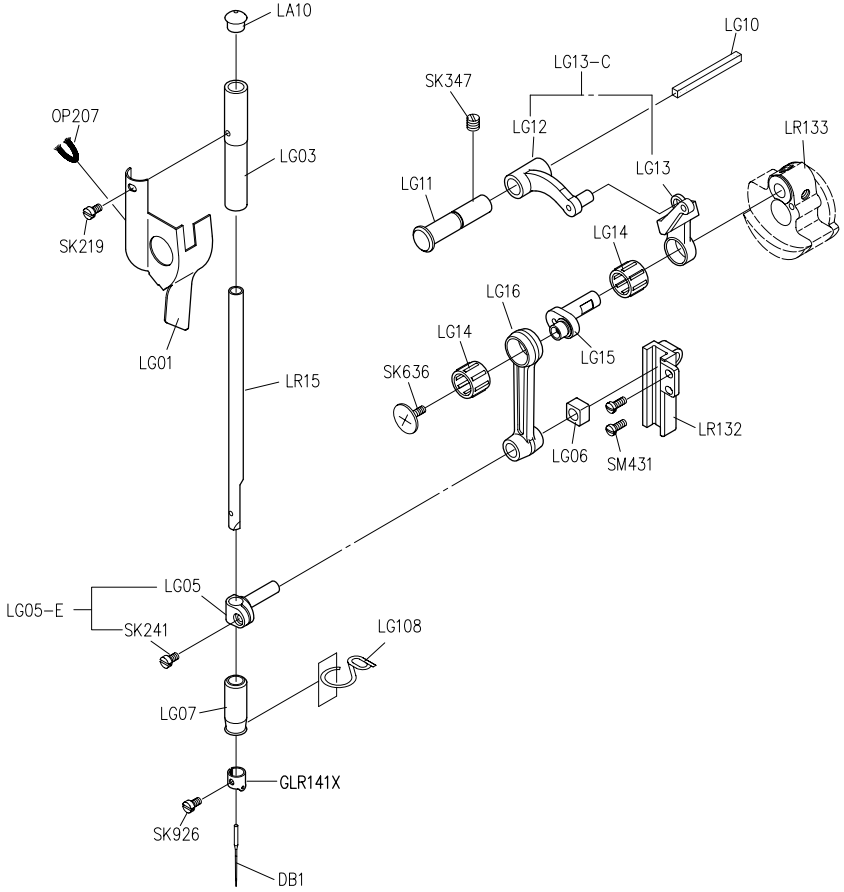

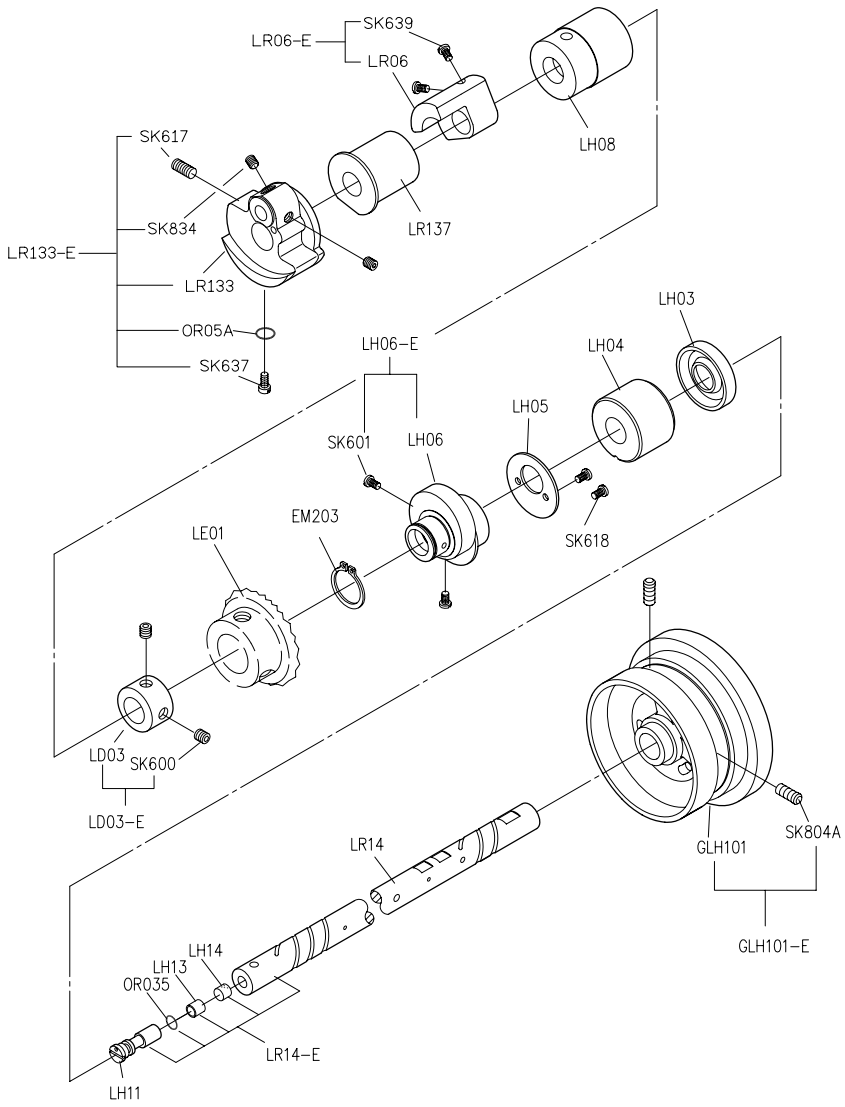

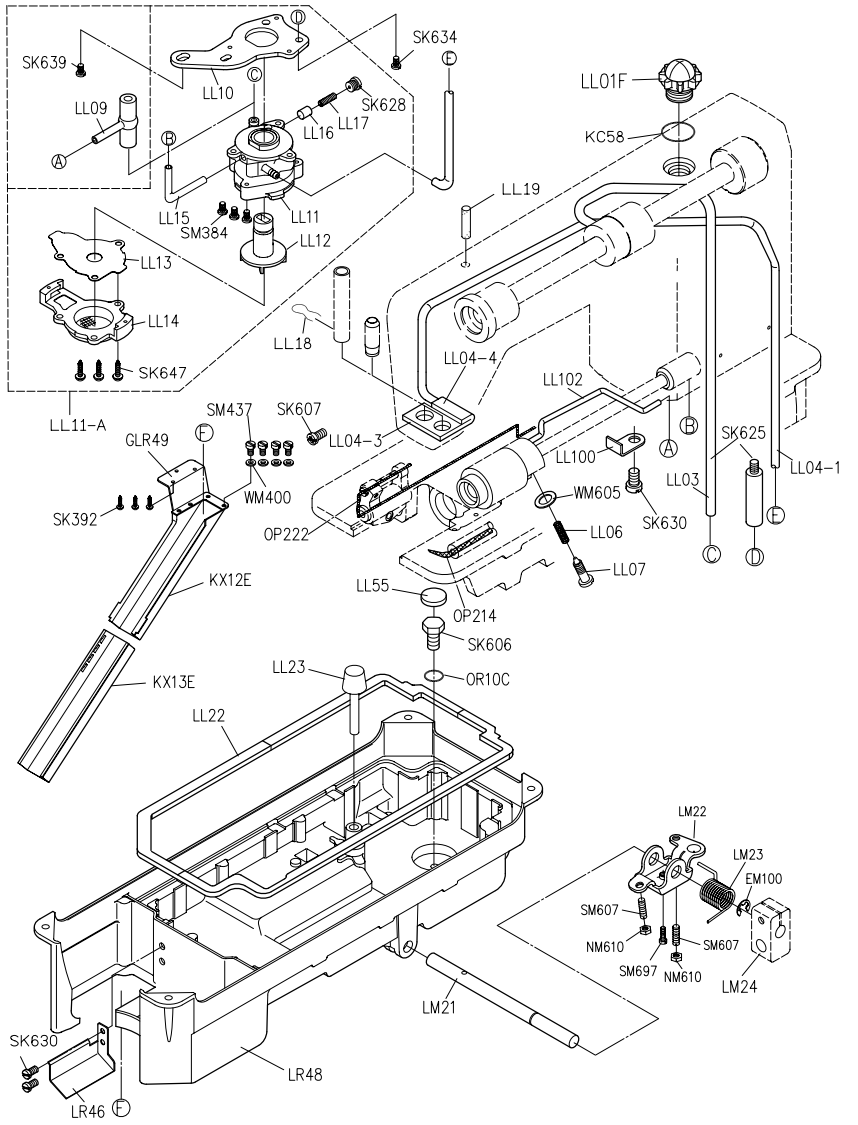

PARTS LIST FOR LH GROUP

PARTS LIST FOR LL GROUP

PARTS LIST FOR LM GROUP

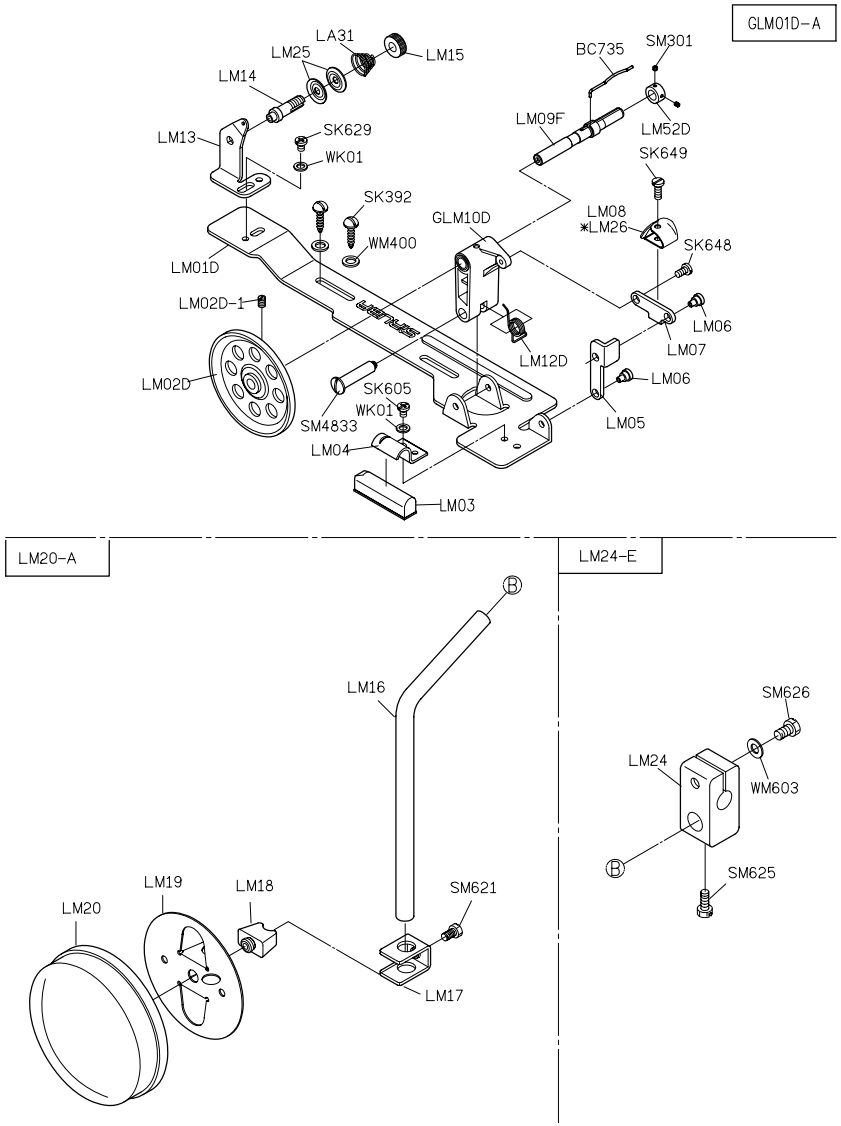

PARTS LIST FOR LR GROUP

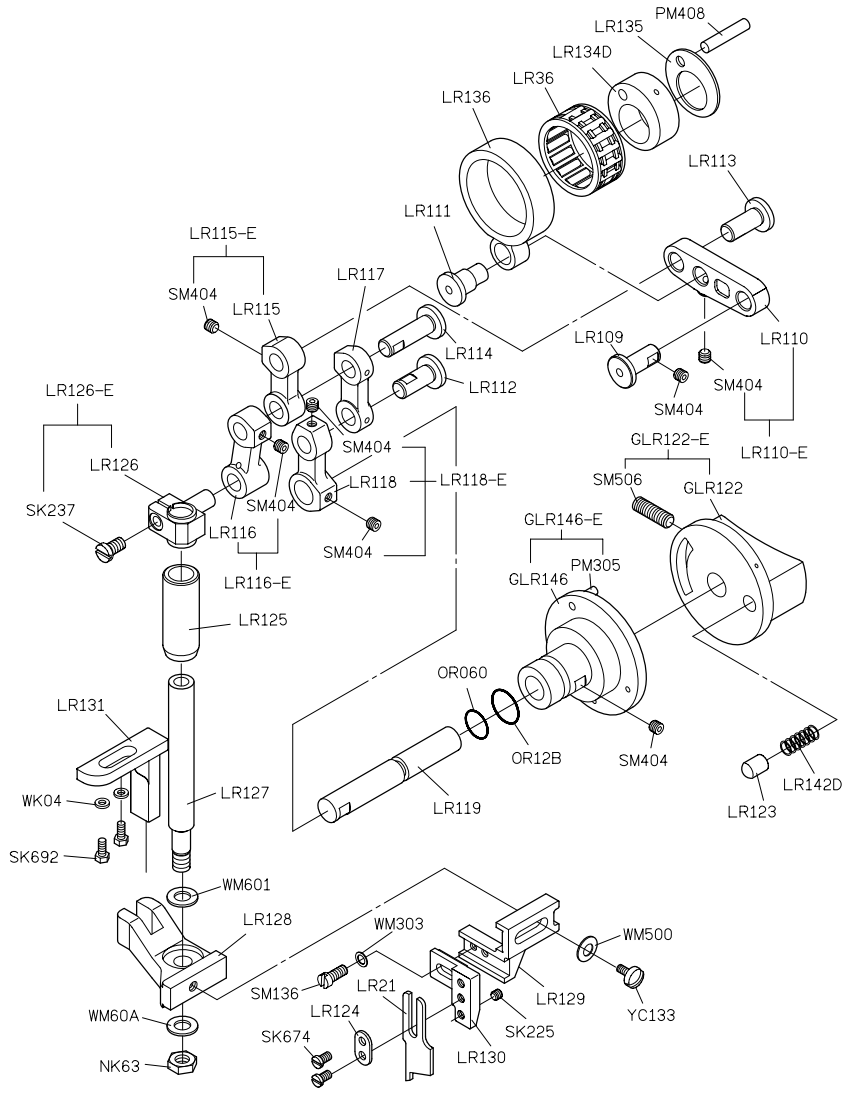

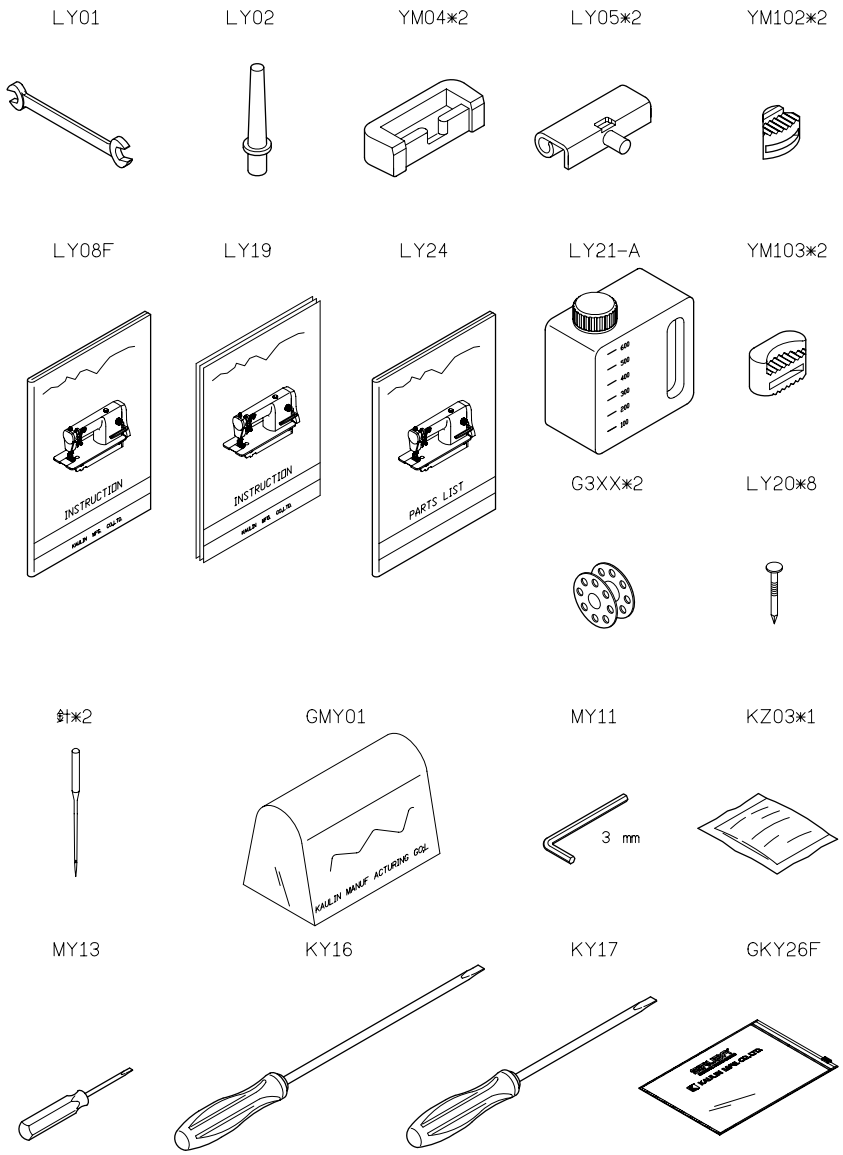

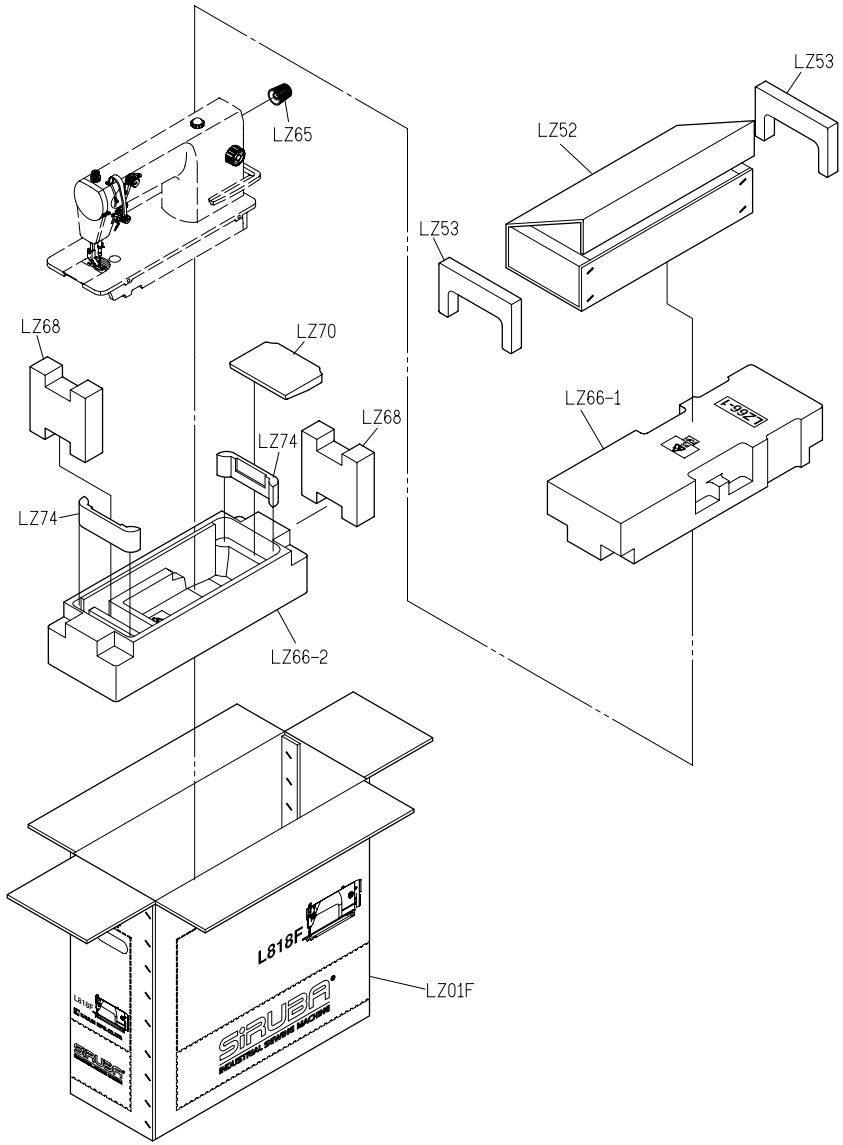

PARTS LIST FOR LY GROUP

PARTS LIST FOR LZ GROUP

PARTS LIST FOR THREAD STAND GROUP

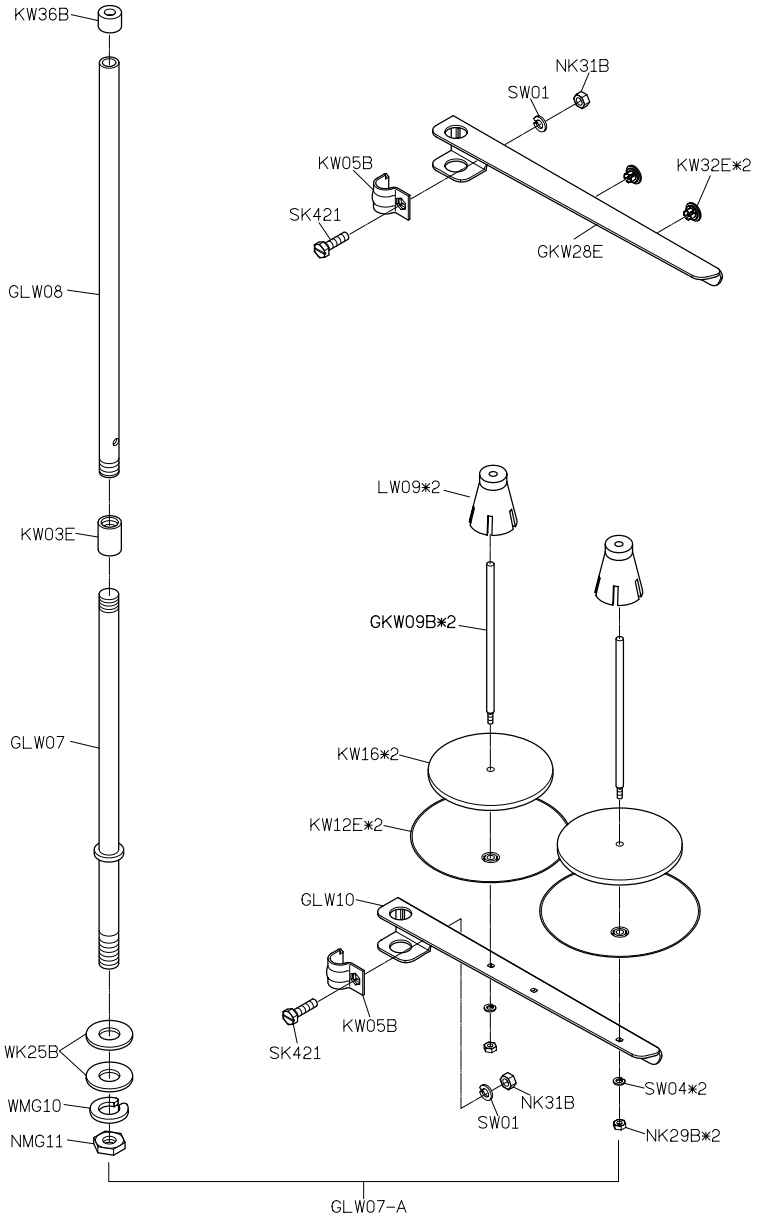

L818F-RM1

高林股份有限公司 KAULIN MFG. CO., LTD.

The specification and/or appearences of the equipment described in this parts list are subiect to change because of modification without previous notice.

LY24. NOV 2007