SiRUBA®
銀翁牌工業用縫紉機
INDUSTRIAL SEWING MACHINE

L818F-RM1
WITH TRIMMER

零件圖 PARTS LIST



CE

高林股份有限公司
KAULIN MFG. CO., LTD.

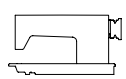		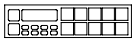	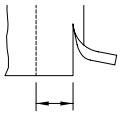	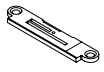										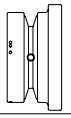
MODEL	SUB-CLASS	OPERATING PANEL	GAUGE WIDTH	NEEDLE PLATE	FEED DOG	PRESSER FOOT	HOOK ASM	BOBBIN CASE ASM	BOBBIN	THROAT PLATE CHIP GUARD	NEEDLE	THREAD GUIDE	THROAT PLATE COVER	HAND WHEEL
機 型	規 格	操作盒	切邊距離	針 板	送 具	押 具	梭 頭	梭 殼	梭 子	下導布架	針 號	導線片	布板蓋	皮帶輪
L818F-RM1-32-00 ~ L818F-RM1-32-03	32	LA55F-A	1/8" (3.2mm)	E705Q (E705S)	D705 (D702)	P705 (P701)	G121	G202	G303	LR104DS (LR104D)	DB*1#14	LR141S (LR141)	LR106S (LR106)	GLH101-A1
L818F-RM1-32-10 ~ L818F-RM1-32-13		H L600												GLH101-A1
L818F-RM1-40-00 ~ L818F-RM1-40-03	40	LA55F-A	5/32" (4.0mm)	E705R (E705Q)	D705	P705	G121	G202	G303	LR104DS	DB*1#14	LR141S	LR106	GLH101-A1
L818F-RM1-40-10 ~ L818F-RM1-40-13		H L600												GLH101-A1

規格件表 CONVERSION CHART

規格件表 CONVERSION CHART

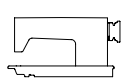			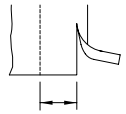	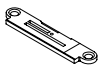						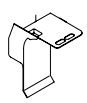				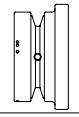
MODEL	SUB-CLASS	OPERATING PANEL	GAUGE WIDTH	NEEDLE PLATE	FEED DOG	PRESSER FOOT	HOOK ASM	BOBBIN CASE ASM	BOBBIN	THROAT PLATE CHIP GUARD	NEEDLE	THREAD GUIDE	THROAT PLATE COVER	HAND WHEEL
機 型	規 格	操作盒	切邊距離	針 板	送 具	押 具	梭 頭	梭 殼	梭 子	下導布架	針 號	導線片	布板蓋	皮帶輪
L818F-RM1-48-00 ~ L818F-RM1-48-03	48	LA55F-A	3/16" (4.8㎜)	E705 (E705Q)	D705	P705	G121	G202	G303	LR104DS	DB*1#14	LR141S	LR106	GLH101-A1
L818F-RM1-48-10 ~ L818F-RM1-48-13		H L600												GLH101-A1
L818F-RM1-64-00 ~ L818F-RM1-64-03	64	LA55F-A	1/4" (6.4㎜)	E705S (E705Q)	D702 (D705)	P701 (P705)	G121	G202	G303	LR104D (LR104DS)	DB*1#14	LR141 (LR141S)	LR106S (LR106)	GLH101-A1
L818F-RM1-64-10 ~ L818F-RM1-64-13		H L600												GLH101-A1

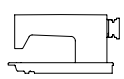			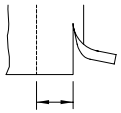	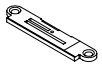										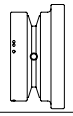
MODEL	SUB-CLASS	OPERATING PANEL	GAUGE WIDTH	NEEDLE PLATE	FEED DOG	PRESSER FOOT	HOOK ASM	BOBBIN CASE ASM	BOBBIN	THROAT PLATE CHIP GUARD	NEEDLE	THREAD GUIDE	THROAT PLATE COVER	HAND WHEEL
機 型	規 格	操作盒	切邊距離	針 板	送 具	押 具	梭 頭	梭 殼	梭 子	下導布架	針 號	導線片	布板蓋	皮帶輪
L818F-RM1-95-00 ~ L818F-RM1-95-03	95	LA55F-A	3/8"(9.5㎜)	E705T (E705Q)	D702 (D705)	P701 (P705)	G121	G202	G303	LR104D (LR104DS)	DB*1#14	LR141 (LR141S)	LR106T (LR106)	GLH101-A1
L818F-RM1-95-10 ~ L818F-RM1-95-13		H L600												GLH101-A1

規格件表 CONVERSION CHART

PARTS LIST FOR LA GROUP

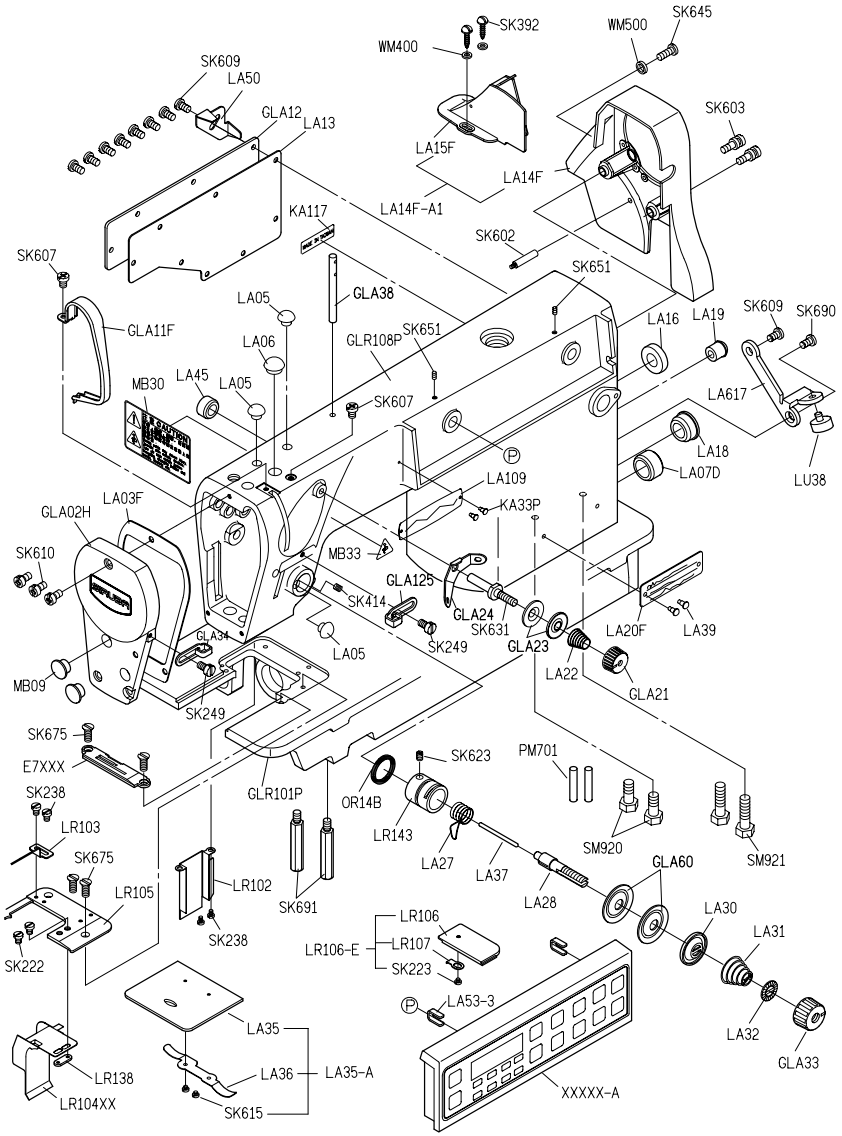

PARTS LIST FOR LB GROUP

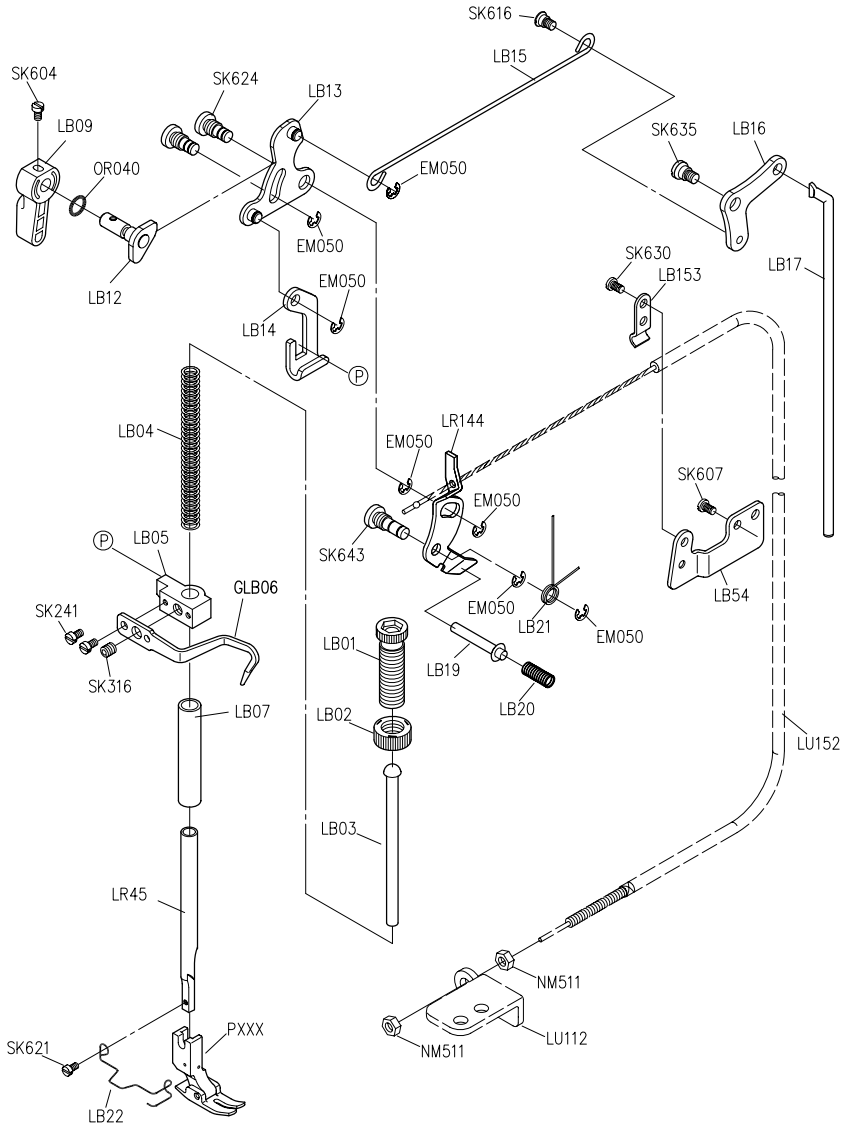

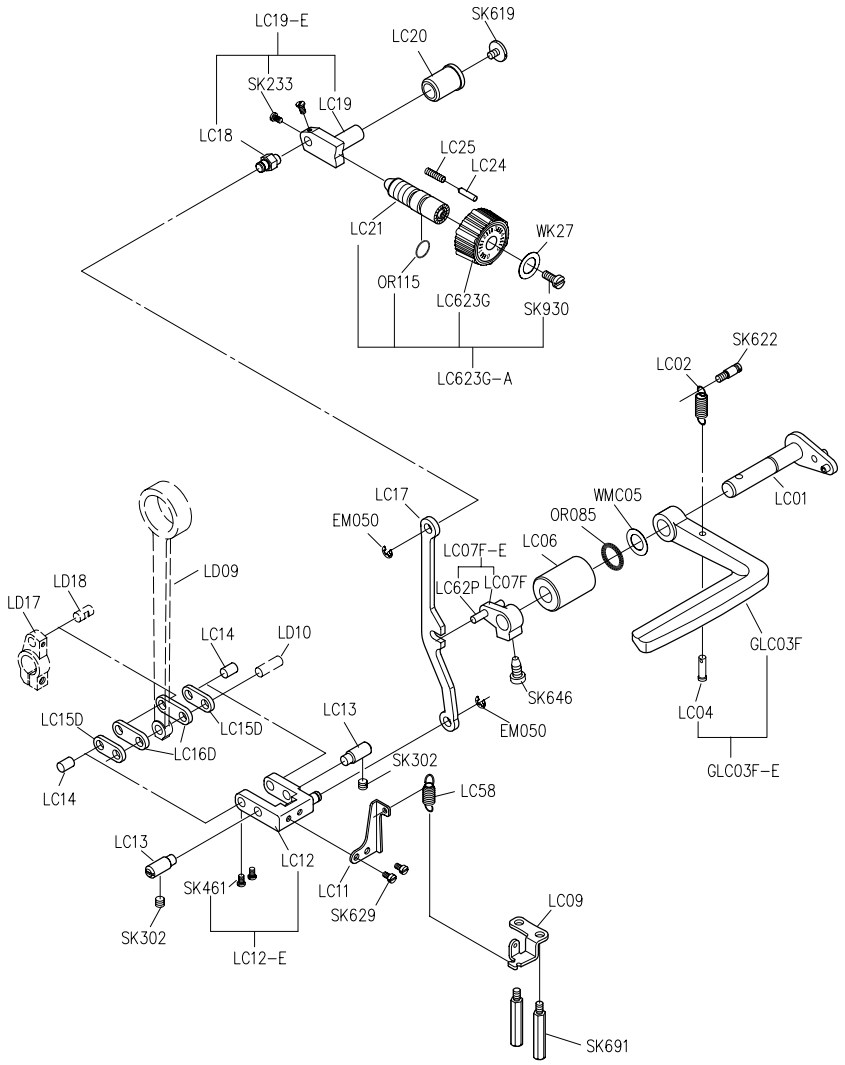

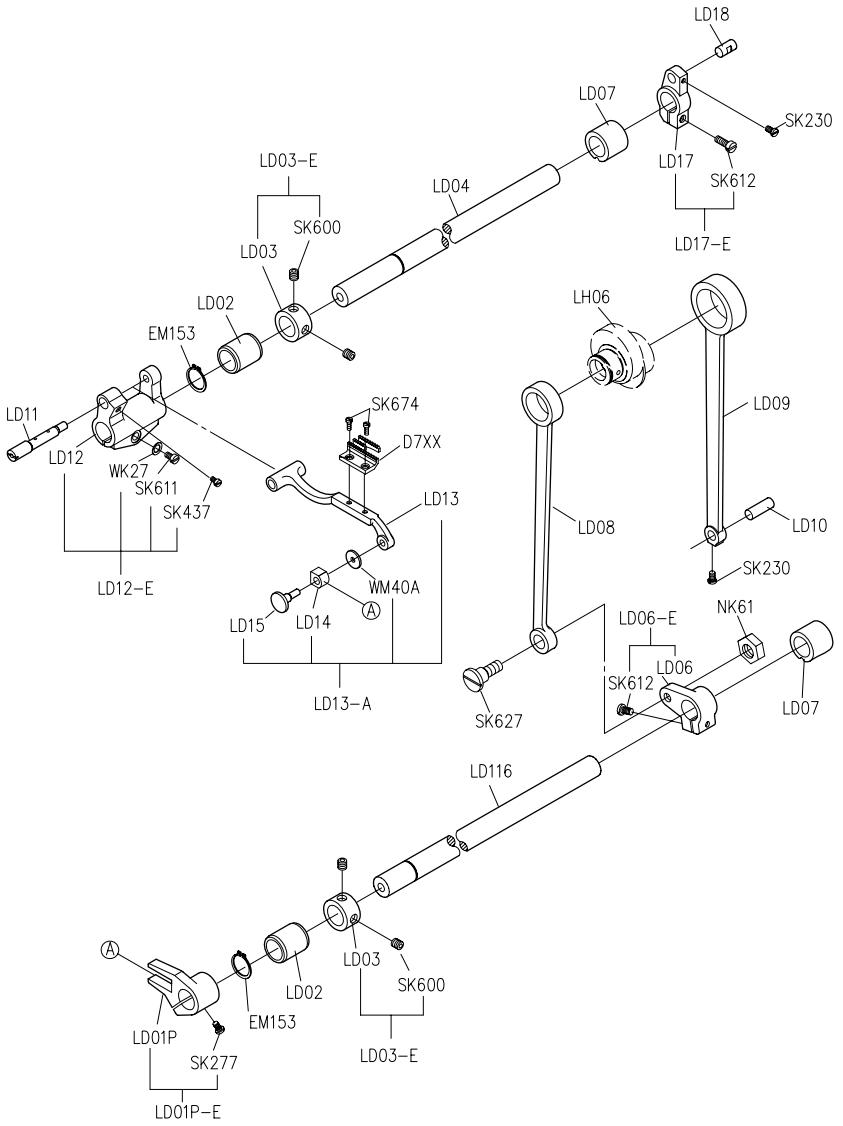

PARTS LIST FOR LC GROUP

PARTS LIST FOR LD GROUP

PARTS LIST FOR LE GROUP

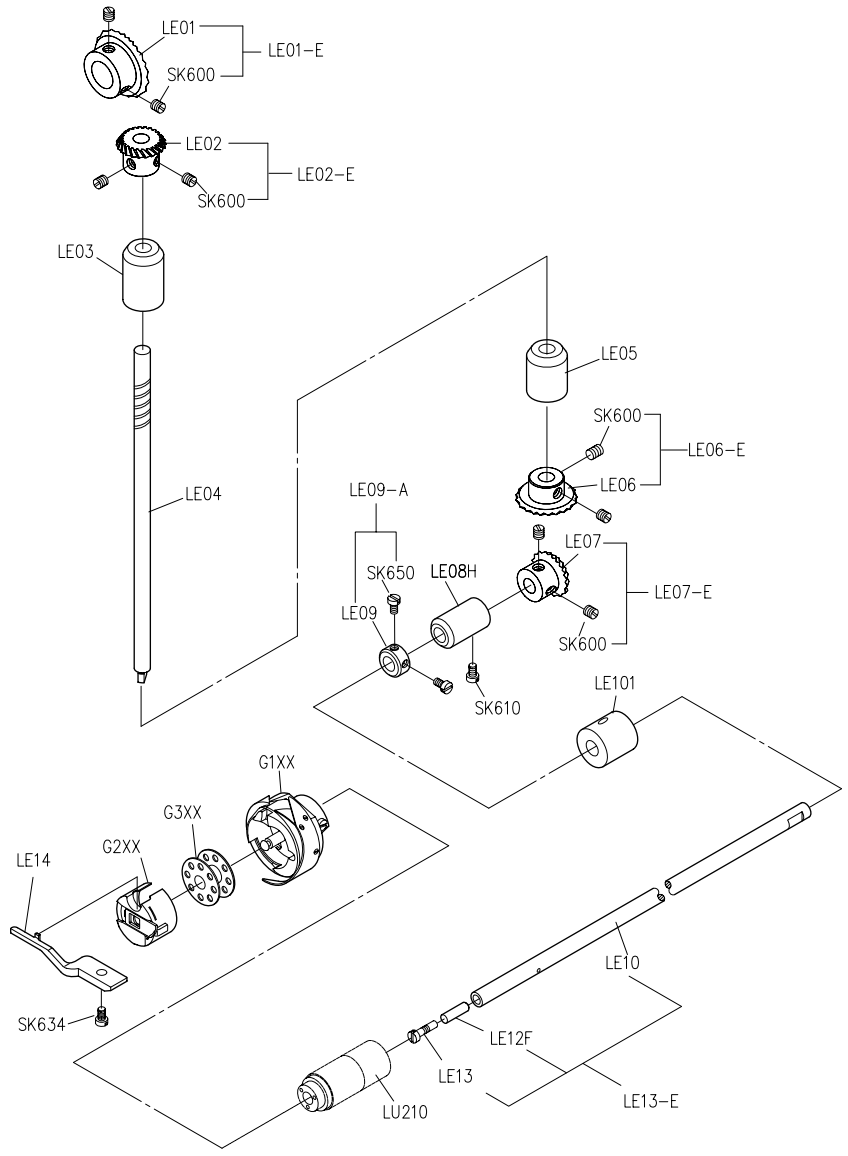

PARTS LIST FOR LG GROUP

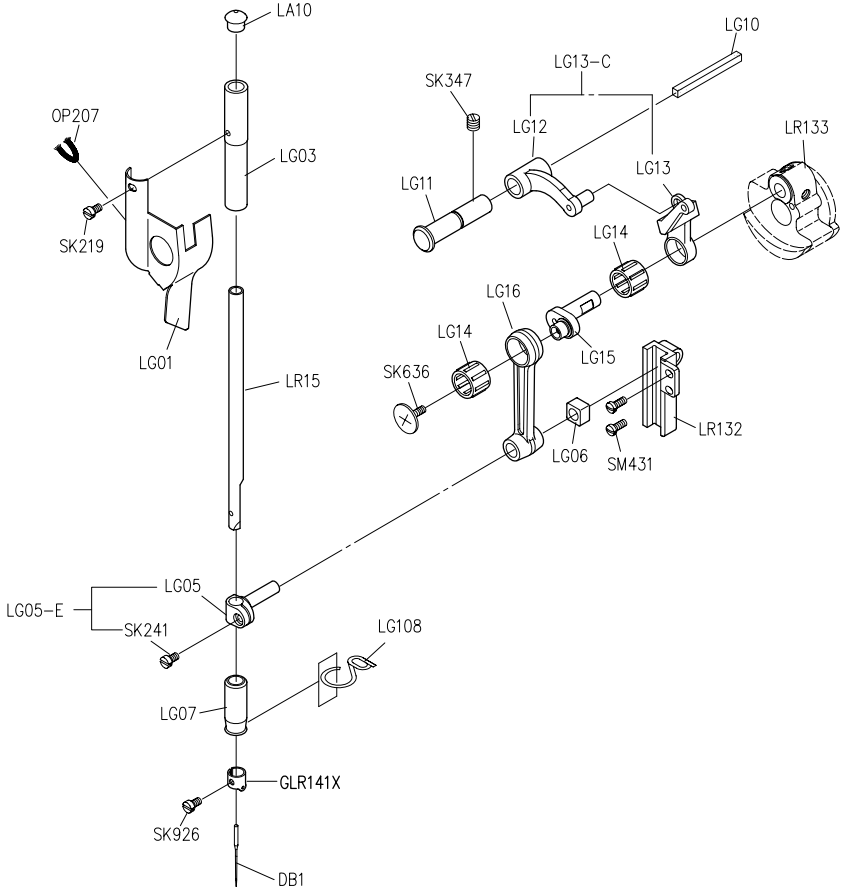

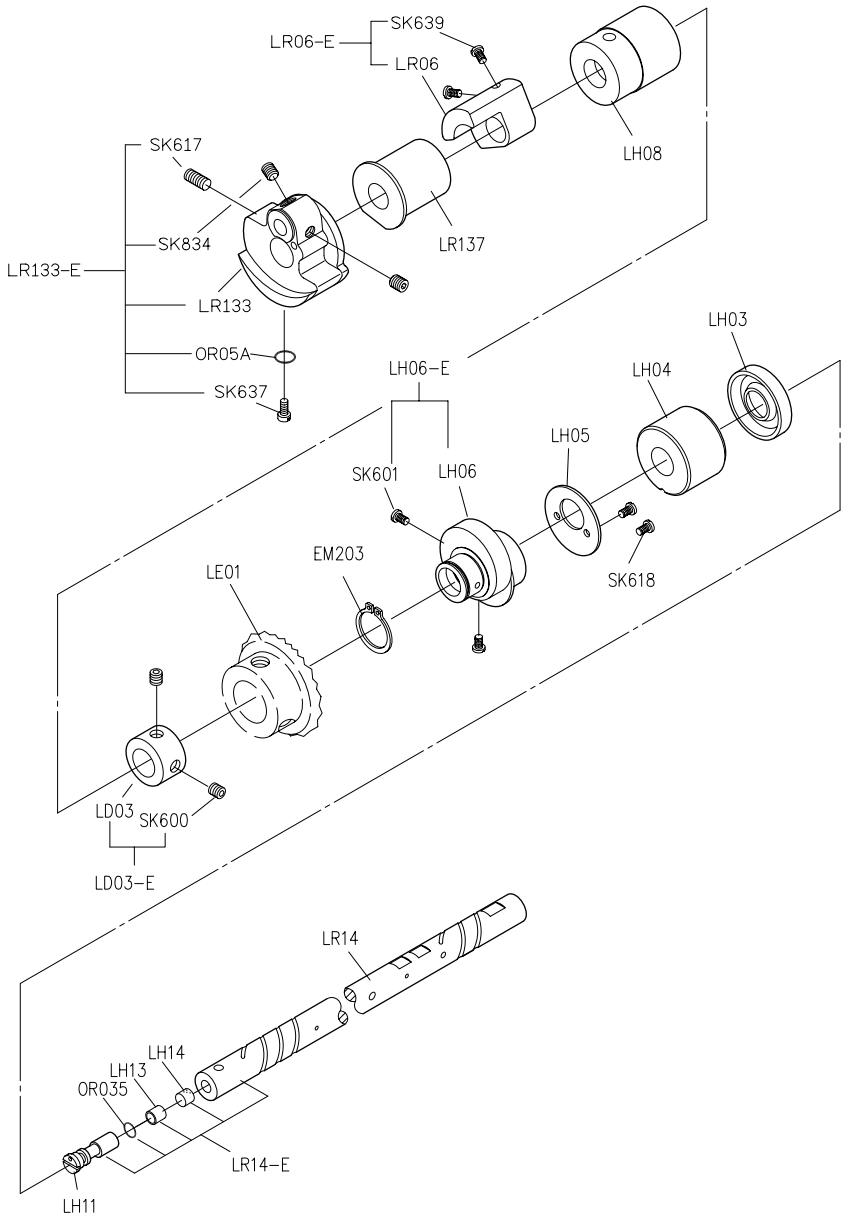

	擺動式切刀	旋轉式切刀
H廠牌馬達	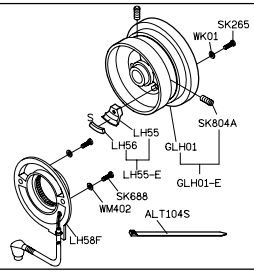 GLH01-A1	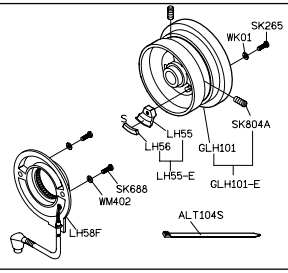 GLH101-A1
其他廠牌馬達(可加後拉輪)	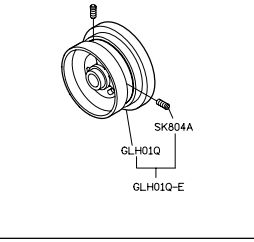 GLH01Q-E	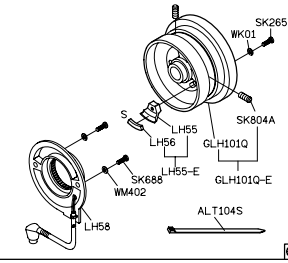 GLH101Q-A1
P廠牌馬達	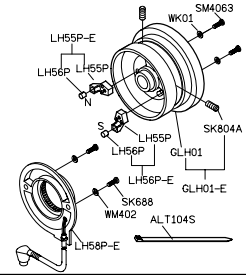 GLH01P-A	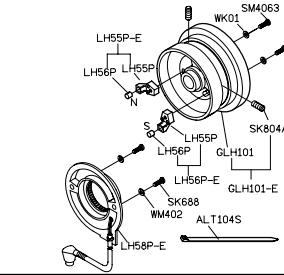 GLH101P-A
P廠牌馬達(可加後拉輪)	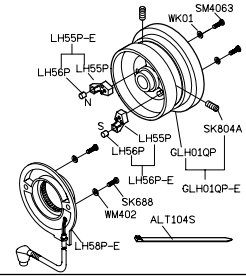 GLH01QP-A	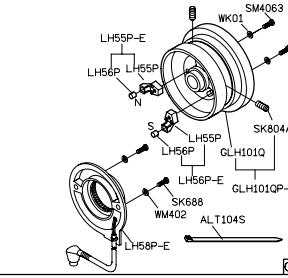 GLH101QP-A

PARTS LIST FOR LH GROUP

PARTS LIST FOR LL GROUP

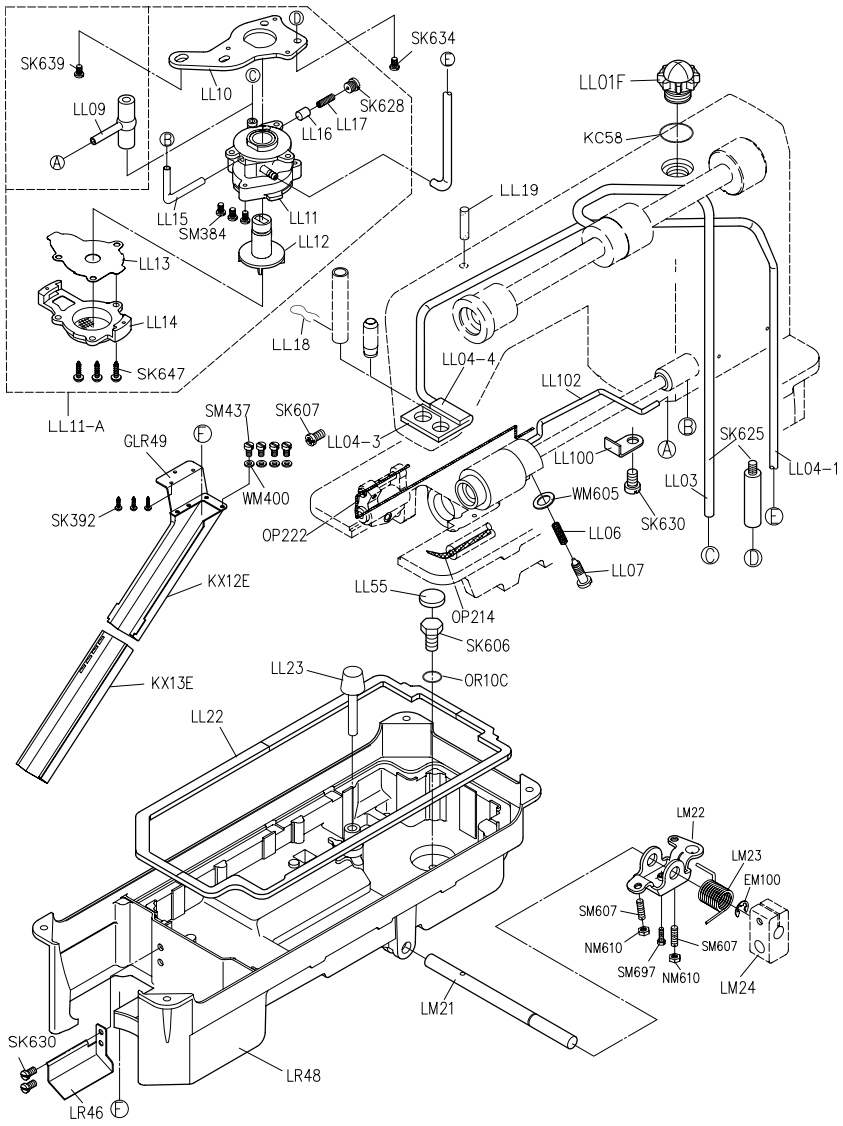

PARTS LIST FOR LM GROUP

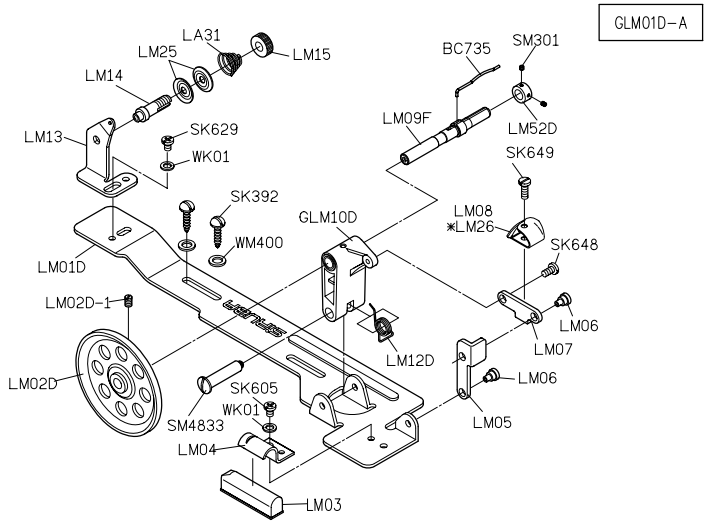

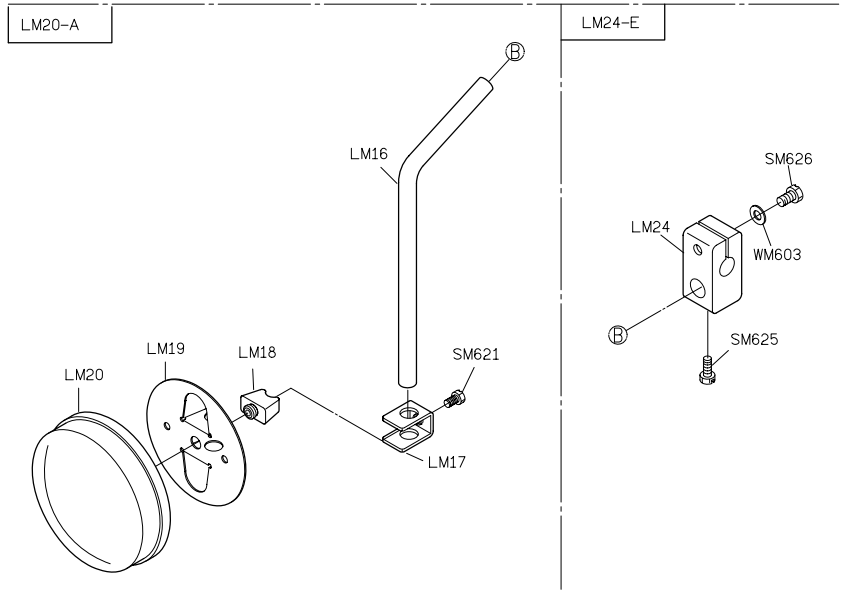

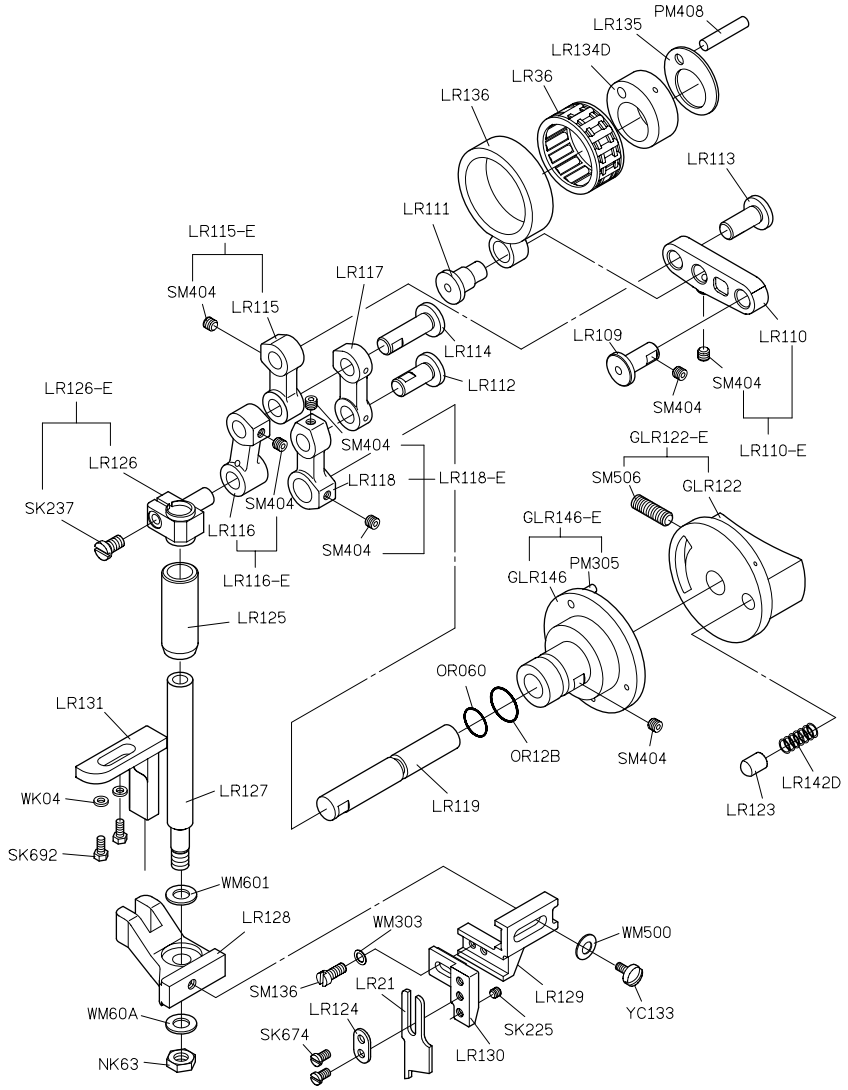

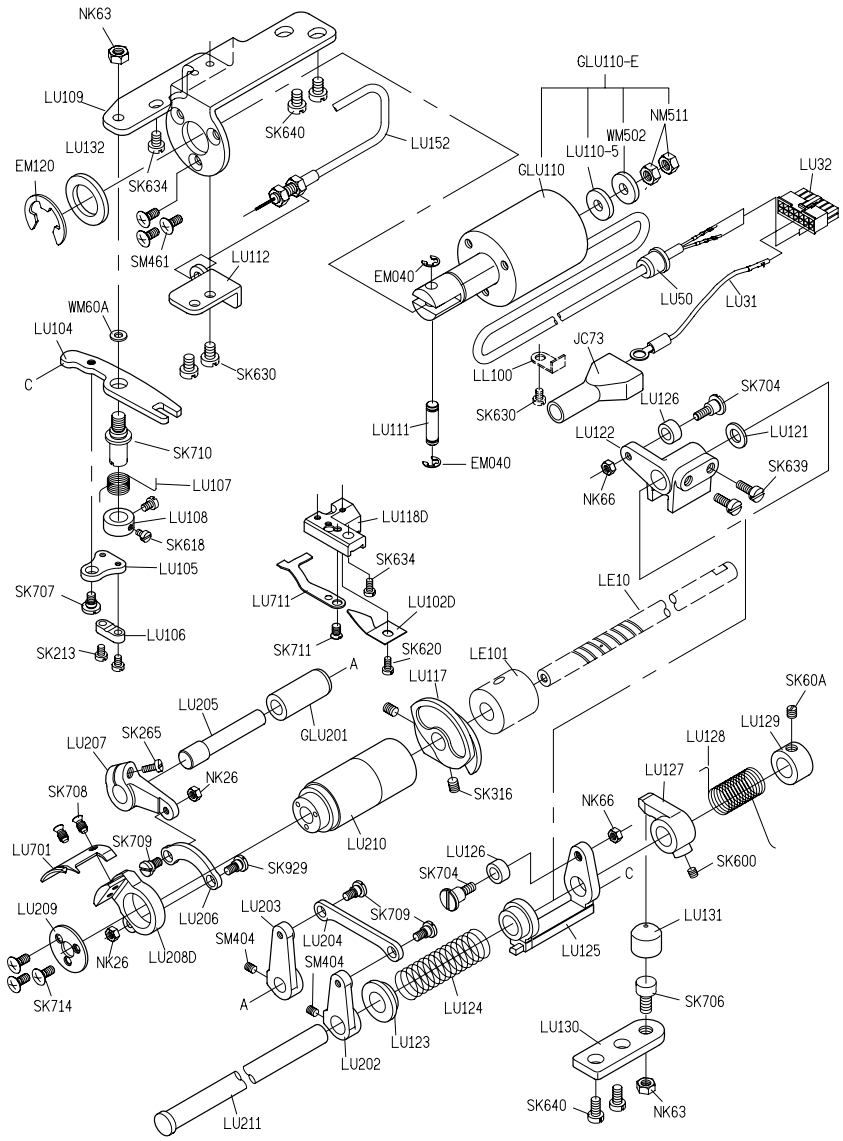

PARTS LIST FOR LR GROUP

PARTS LIST FOR LU GROUP

PARTS LIST FOR LU GROUP

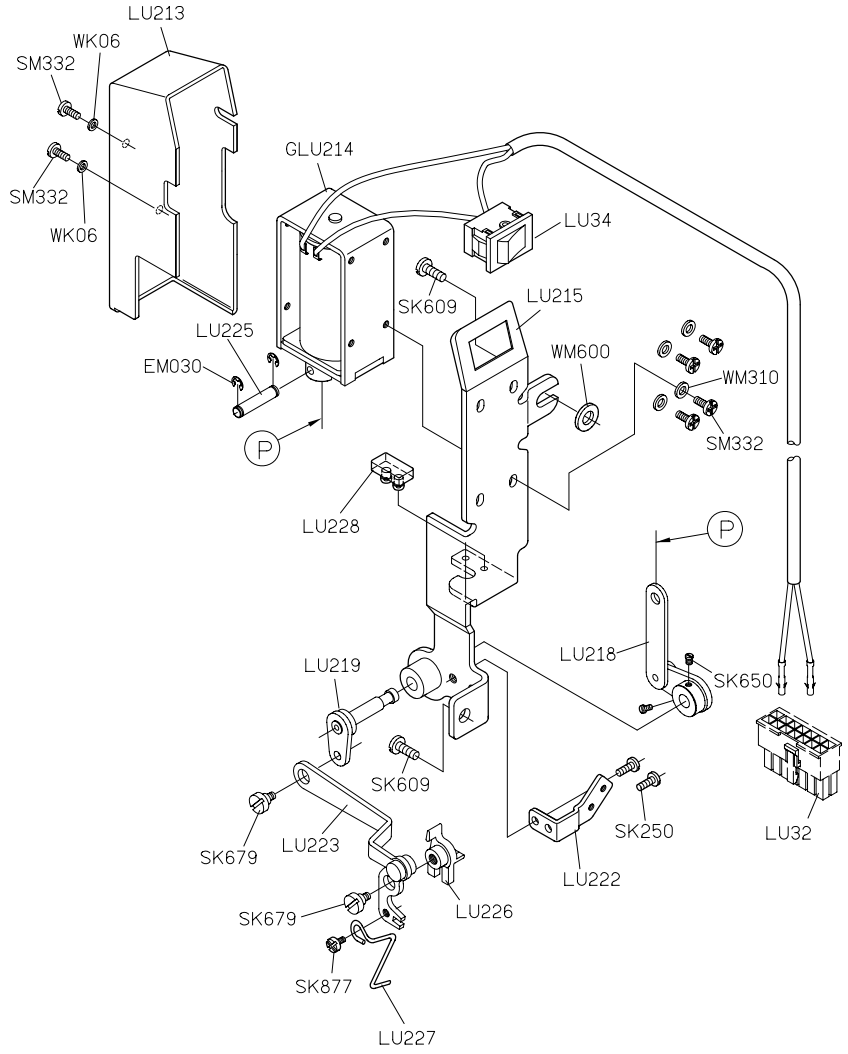

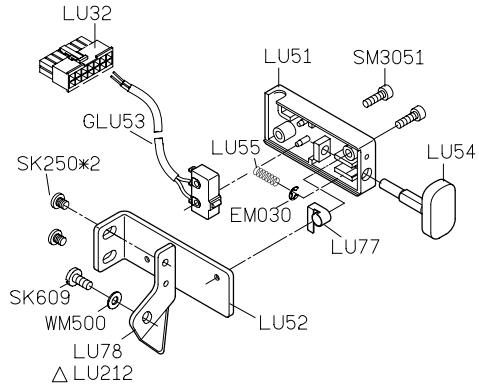

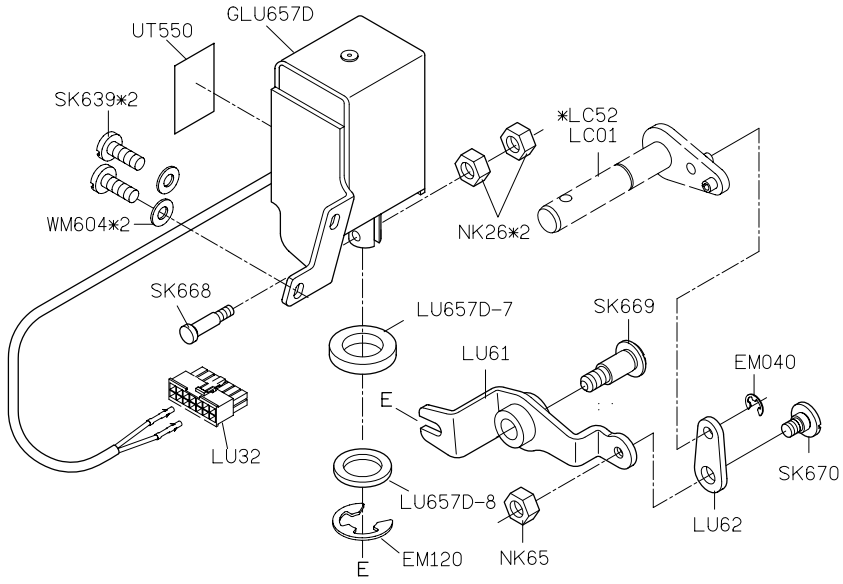

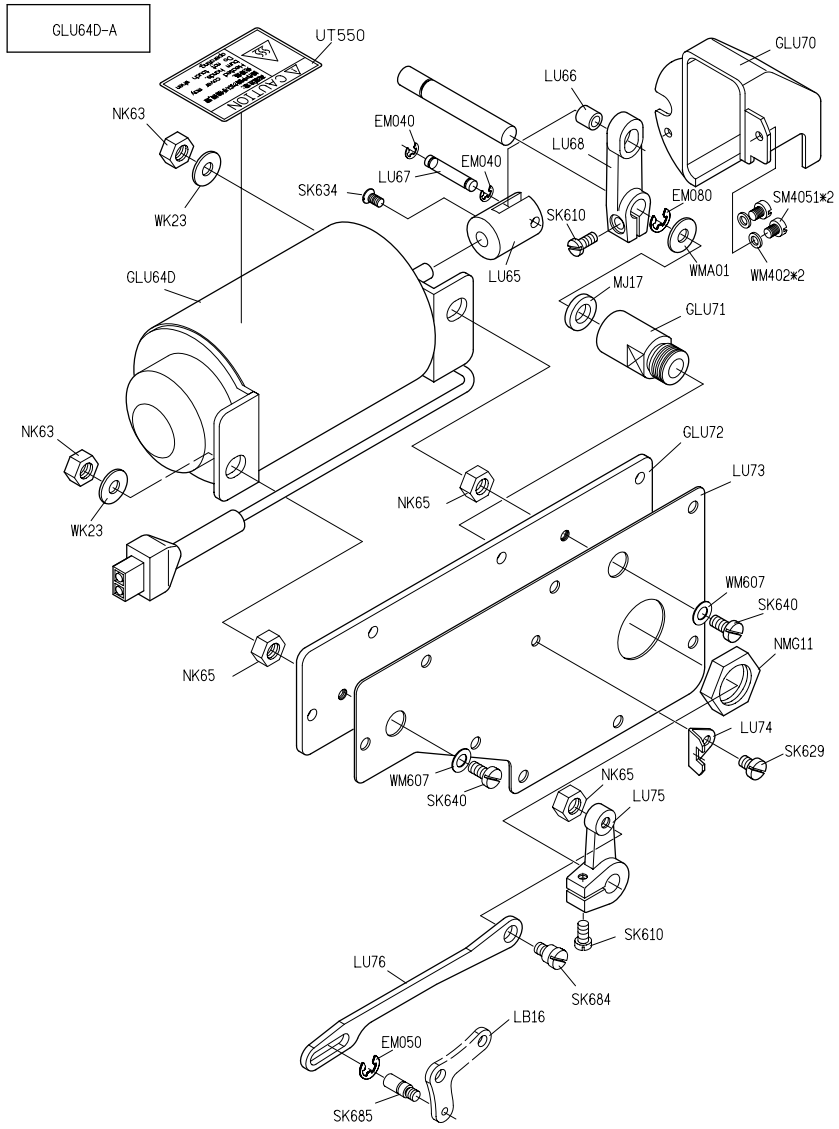

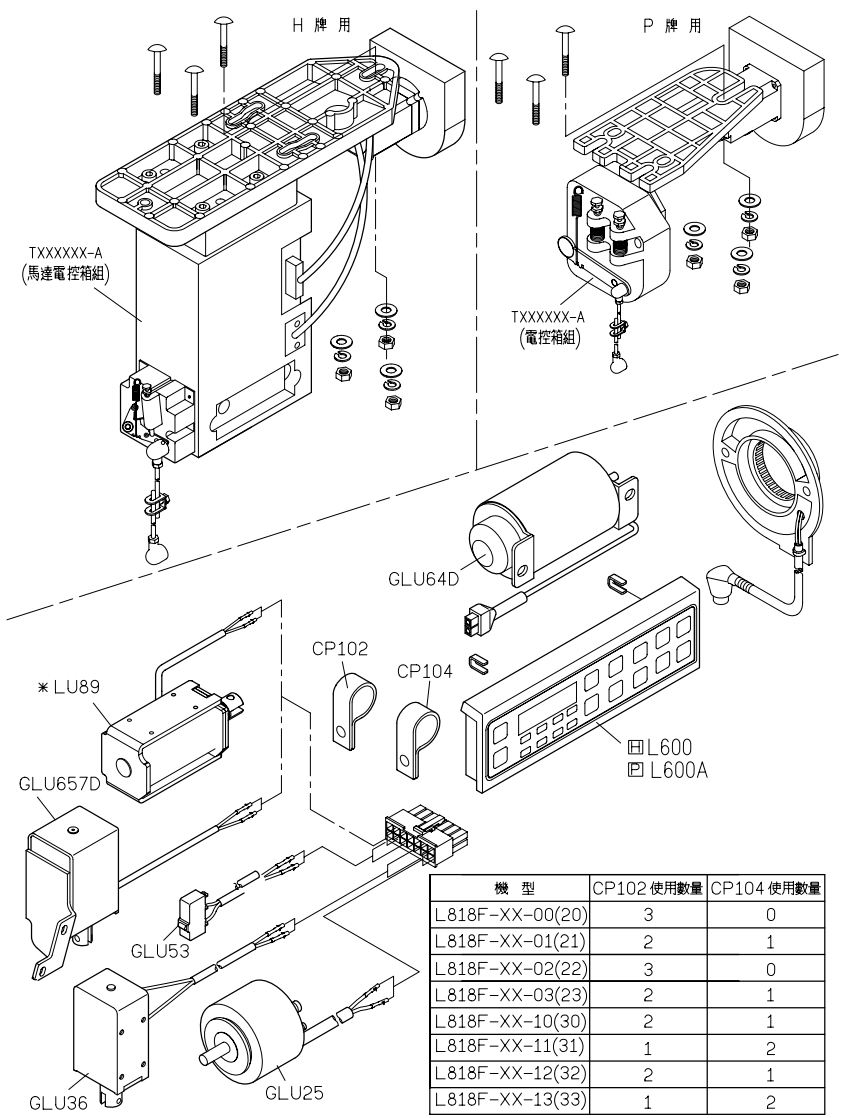

機 型	CP102 使用數量	CP104 使用數量
L818F-XX-00(20)	3	0
L818F-XX-01(21)	2	1
L818F-XX-02(22)	3	0
L818F-XX-03(23)	2	1
L818F-XX-10(30)	2	1
L818F-XX-11(31)	1	2
L818F-XX-12(32)	2	1
L818F-XX-13(33)	1	2

PARTS LIST FOR LU GROUP

PARTS LIST FOR LY GROUP

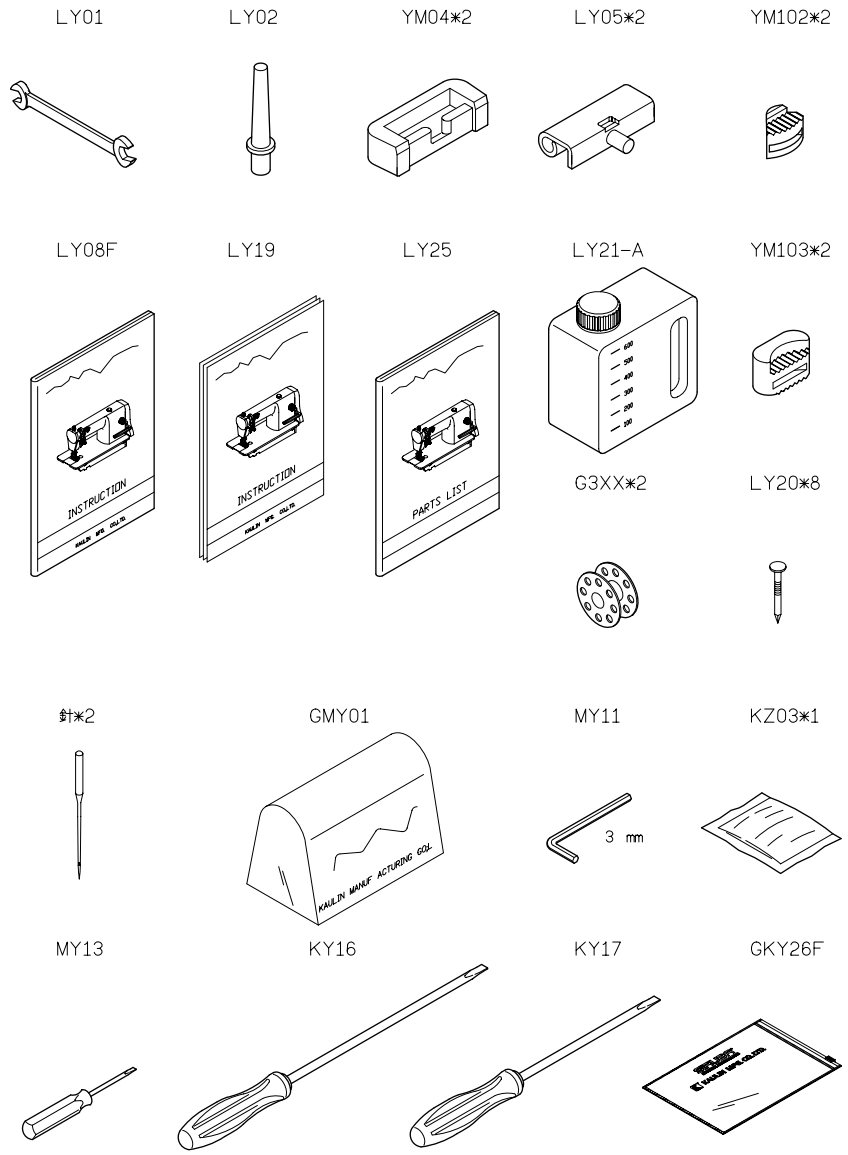

PARTS LIST FOR LZ GROUP

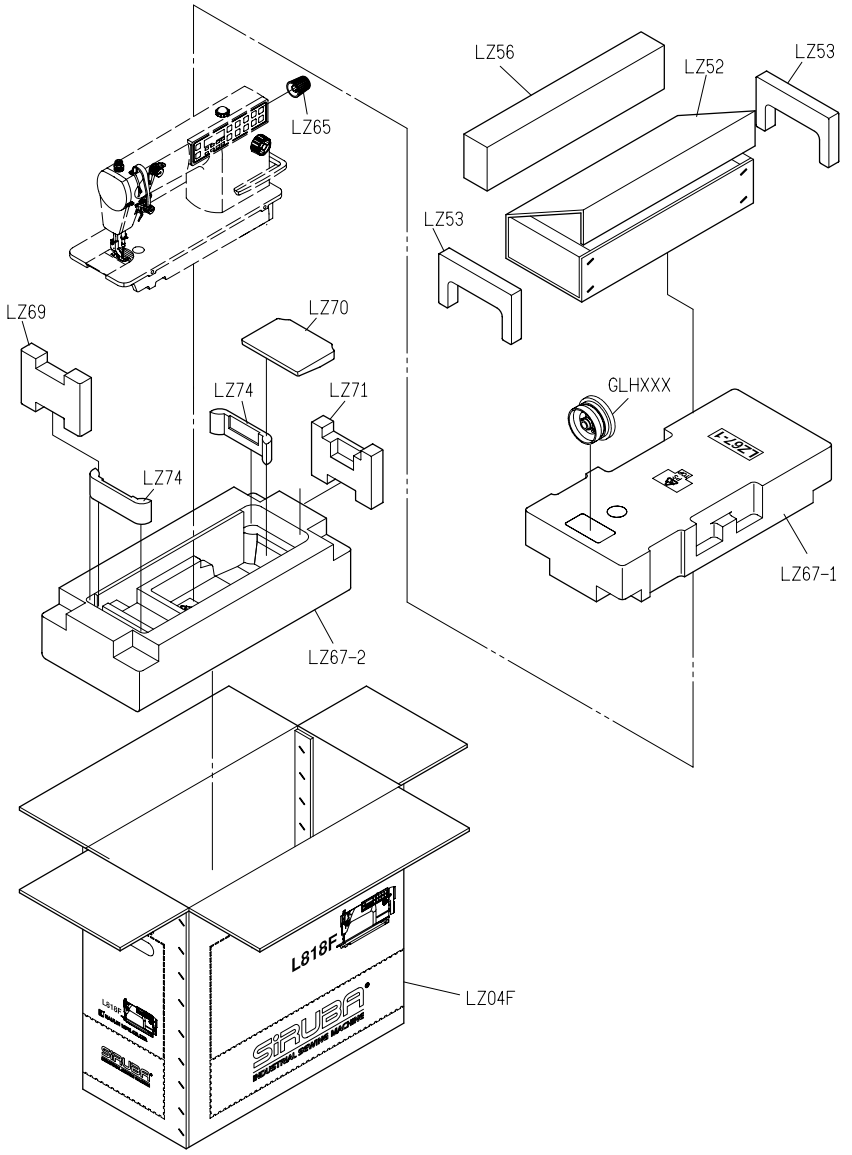

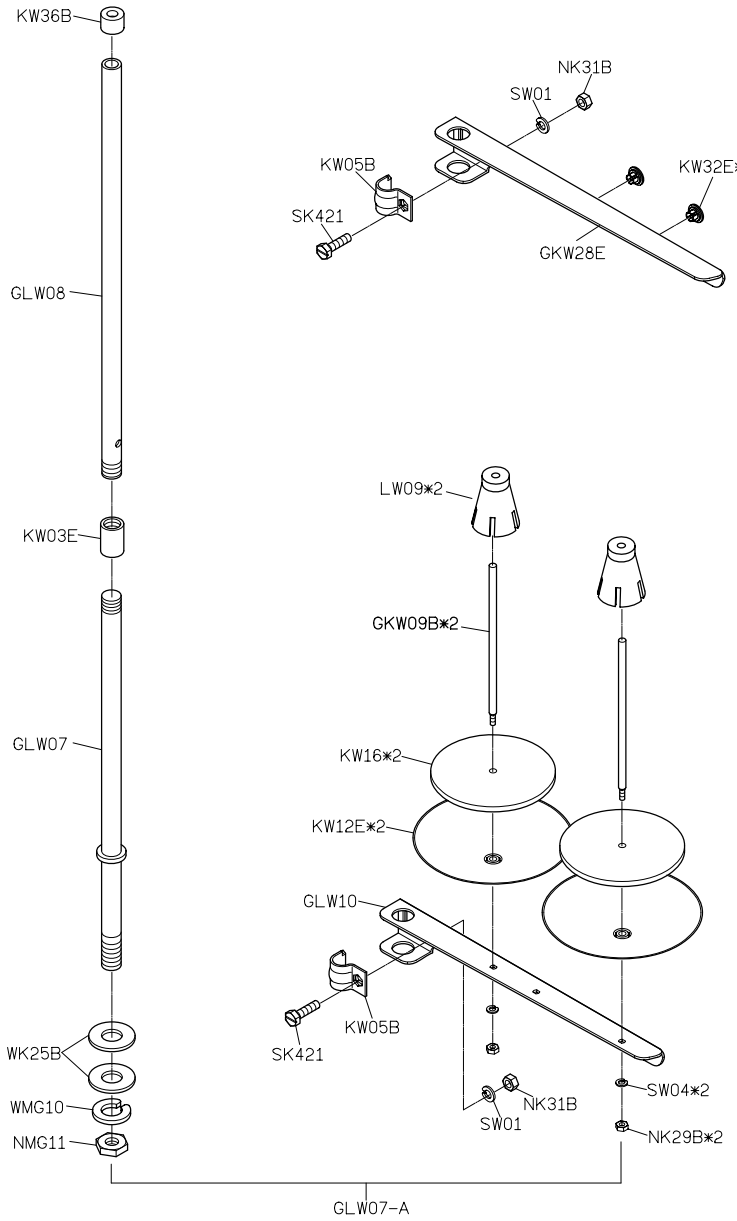

PARTS LIST FOR THREAD STAND GROUP

L818F-RM1
WITH TRIMMER

高林股份有限公司 KAULIN MFG. CO., LTD.

The specification and/or appearences of the equipment described in this parts list are subiect to change because of modification without previous notice.

LY25. NOV 2007