SiRUBA®

銀翁牌工業用縫紉機

INDUSTRIAL SEWING MACHINE

L818F

使用說明書
INSTRUCTION BOOK



CE

高林股份有限公司

KAULIN MFG. CO., LTD.

EC DECLARATION OF CONFORMITY

According to the following EC Directive

Machinery Directive : 98/37/EC , as amended by 89/336 / EEC and 73/23/ EEC.

The undersigned, ROBERT TSAI , representing KAULIN MFG. CO., LTD. 11F 128 Sec. 3 Min Shen E. Road, Taipei , Taiwan ROC., manufacturer, declares that the machine described hereafter :

Lockstitch Sewing Machine.

Model :**L818F**

Provided that it is used and maintained in accordance with the generally accepted codes of good practice and the recommendations of the instructions manual, meets the essential safety and health requirements of the Machinery Directive.

For the most specific risks of the machine, safety and compliance with the essential requirements of the Directive has been based on elements of : the European Standard EN 292 - 1 & - 2 : 1992 Safety of machinery ; basic concepts, general principles for design.

The compliance of the model with the requirements of EC Machinery Directive was established by AIB-VINCOTTE Inter n.f.p, Avenue A. Drouart 27-29 , B 1160 , Brussels, Belgium (Notified body under the number 26 for machinery listed in annex IV of EC Machinery Directive).

Date : JUN / 02 / 2006

Signature : 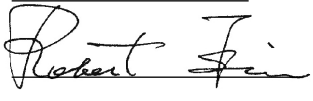

Qualification : R&D MANAGER

General Safety Instructions

Warning ! When using this machine, basic safety precautions should always be followed to reduce the risk of fire, electric shock and personal injury, including the following.
Read all these instructions before operating this product and save these instructions.

1.Keep work area clean.
Cluttered areas and benches invite injuries.
2.Consider work area environment.
Do not expose power to rain. Do not use machine tools in damp or wet locations. Keep work area well lit. Dot not use power tools where there is risk to cause fire or explosion.
3.Guard against electric shock.
Avoid body contact with earthed or grounded surfaces (e.g. pipes, radiators, ranges refrigerators).
4.Keep children away.
Do not let visitors touch the tool or extension code.
5.Dress properly.
Do not wear loose clothing or jewelry, they can be caught in moving parts. Wear protecting hair covering to contain long hair.
6.Do not abuse the cord.
Never carry the machine by cord or yank it to disconnect it from the socket. Keep the cord away from heat, oil and sharp edges.
7.Maintain machine with care.
Follow instructions for lubrication and changing accessories. Inspect tool cord periodically and if damaged have it repaired by an authorized serviced facility.
8.Disconnect machine
When not in use, before servicing and when changing accessories.
9.Avoid unintentional starting.
Do not carry a plugged in tool with a finger on the switch. Ensure switch is off when plugging in .
10.Check damaged parts.
Before further use of the tool, a guard or other part that is damaged should be carefully checked to determine that it will operate properly and perform its intended function.
11. Warning.
The use of any accessory or attachment, other than those recommended in this instruction manual, may present a risk of personal injury.
12. Have your tool repaired by a qualified person.
Repairs should only be carried out by qualified persons using original spare parts.

Special Warning For Electric Connection !

1.Incorporate this machine only with "CE" certificate hold-to-run control device.
2.Follow the instruction manual device to install control device.
3.Always earth machine appropriately during operation.
4.Before adjustment, parts change or servicing must be sure to pull out the plug from socket to prevent the hazard of unintentionally start of machine.

索引	INDEX	頁/PAGE
重要安全事項說明	IMPORTANT SAFETY INSTRUCTIONS	1
特別事項	WARNING	5
油盤安裝	OIL PAN INSTALLATION	6
潤滑	OIL LUBRICATION	7
梭頭油量調整	ADJUSTING THE AMOUNT OF OIL	11
針的安裝	INSTALLING THE NEEDLE	11
梭子之安裝	SETTING THE BOBBIN	12
機頭穿線	THREADING THE MACHINE	13
針距調整	STITCH LENGTH ADJUSTMENT	13
線架安裝	THREAD STAND ASSEMBLY	14
皮帶蓋及梭子捲線器之安裝	THE BELT COVER AND THE BOBBIN WINDER MOUNTING	14
膝控押具提升器之調整	ADJUSTMENT OF THE KNEE CONTROLLER FOR HIGHTER PRESSER FOOT LIFTING	15
腳踏板之操作	OPERATING THE PEDAL	16
針線 梭線鬆緊度調整	NEEDLE THREAD/ BOBBIN THREAD TENSION ADJUSTMENT	17
控線組彈簧調整	THE THREAD TAKE UP SPRING ADJUSTMENT	18
押具提升桿	MANUAL FOOT LIFTER	19
押具壓力調整	ADJUSTING PRESSER FOOT PRESSURE	20
送具時位調整	FEED TIMING ADJUSTMENT	20
送具傾斜度	ADJUSTING THE TILT OF THE FEED DOG	21
送具高度	ADJUSTING THE HEIGHT OF THE FEED DOG	22
針與梭頭時位關係	CORRELATION BETWEEN NEEDLE AND HOOK	23
押具高度調整	PRESSER FOOT HEIGHT ADJUSTMENT	24
切線刀按裝	COUNTER KNIFE ADJUSTMENT	25
導線片之調整	THE THREAD TAKE UP STROKE ADJUSTMENT	26

索引	INDEX	頁/PAGE
停針位置調整	NEEDLE STOP POSITION ADJUSTMENT	26
腳踏板壓力及行程	ADJUSTING THE TENSION ON PEDAL AND PEDAL STROKE	28
腳踏板調整	ADJUSTING THE PEDAL	29
單觸式倒縫機構	OPERATING THE ONE TOUCH TYPE REVERSE FEED STITCHING MECHANISM	29
撥線桿	ADJUSTING THE THREAD WIPER	30
桌板圖	TABLE CUT-OUT	32

重要安全事項說明

感謝您購買本機器，為了使這台機器能獲得最佳功能以及安全的操作，務必請正確的使用這台機器，使用前請仔細閱讀使用說明書，希望您能長期使用它。請記得將此說明書放在容易取得的地方。

1・當您使用機器時，除了以下事項外，請注意其他基本安全措施。

2・使用機器前，除了這本使用說明書外，請詳細閱讀其他有關說明書。此外，請妥為保存這本使用說明書，以便需要時可以隨時取閱。

3・先確認機器是符合貴國安全規定及標準後，再使用機器。

4・當機器完成操作準備時，所有安全配備必需安裝就緒，在缺少所述安全配備下操作是不被允許的。

5・此機器應由受過適當訓練之操作員操作。

6・為了安全, 我們建議您配戴安全眼鏡。

7・以下情形請先關閉電源或拔掉插頭：

(1)・穿針線、線導片、天平等以及更換梭子時。

(2)・更換針、押具、針板、送具、頂針、喇叭、車布導板，以及其他附屬配件時。

(3)・維修工作時。

(4)・離開工作場所或工作場所無人看顧時。

IMPORTANT SAFETY INSTRUCTIONS

For operating safely and to get the most out of the many functions of this machine, you must operate it correctly. Please read and follow the instructions of this manual, and keep it at hand for future references. We are confident that you will enjoy this machine as much as we enjoyed manufacturing it.

1・When you use this machine, please pay attention to the basis safety measures.

2・Before using this machine, please read this manual and all related instructions. In addition, please save this manual for your future needs.

3・Please use this machine after it has been ascertained that it conforms with safety standards and regulations of your country.

4・It is not allowed to operate this machine without the specified safety devices. All safety devices must be in right position. When the machine is ready for operation.

5・This machine must be operated by an appropriately trained operator.

6・For your own safety, we suggest you wear goggles.

7・Please turn off the power switch or disconnect it before doing the following tasks :

(1)・Threading needle(s), adjusting thread Take-up(s), thread guide(s), and / or replacing bobbin(s).

(2)・Replacing needles, presser feet, needle plates, feed dogs, needle guards, folders, cloth guides and other parts or accessories.

(3)・Repairing this machine.

(4)・When the operator is leaving the working place or when the working place is unattended.

(5)・若使用離合器馬達而無煞車片裝置時，必需待馬達完全停止。

8・假如不慎讓機器及配件使用之油或油脂，接觸到眼睛，皮膚或誤食時，請立刻以水清洗接觸部位及就診。

9・請勿擅自碰觸運轉中之零件或配件及且注意機器電源是否已開啟。

10・維修、修改及調整等工作，需由受過適當訓練的技師或熟手為之，維修時只許使用由SIRUBA指定之零件。

11・一般維修及檢查工作必須由受過適當訓練的人員為之。

12・電子零件維修及保養工作必須由資深的電子技師為之，或由非常熟練的人員檢查及指導，當發現零件損壞時，請立刻停止機器運轉。

13・在做裝有氣動式零件(例如氣缸)機器的維修及保養工作前，機器連接空壓機及高壓空氣必須予以關閉，機器中殘存高壓氣體必需予以清除，此外調整及性能檢查只能由受過適當訓練的技師或熟手為之。

14・機器使用一段時間，必需定期清理。

(5)・While clutch motors without brake pads are used, motors must come to completely stop.

8・By any chance, if you allow grease, oil, or any fluid contact your skin or eyes, please wash the contacted area completely with clean water and consult a medical doctor. If the fluid was swallowed contact a medical doctor immediately.

9・Do not touch any parts and devices in motion while the machine is running, Always pay attention to whether power switch is on or off before conducting any task.

10・Qualified technicians are required for machine adjustment, modification, and repair. Only genuine parts from SIRUBA are recommended for replacement. Damage resulted in using generic parts are subject to your own risk.

11・Routine maintenance and check-up have to be performed by appropriately trained persons, or qualified technicians.

12・Qualified technician or well-trained persons are required for services to electronic components knowledge of electronic is essential for conducting adjustment or repair tasks. Stop the machine immediately when discover the failure of any of the electronic components.

13・The air hose has to be detached from the machine and the compressor or air supply has to be cut off before repairing and servicing the machine equipped with pneumatic parts such as an air cylinder. Qualified technicians or well-trained persons are required for adjustment and repairs.

14・To ensure the best performance, periodically clean up on the machine is necessary.

15・為使機器能正常操作，機台務平放地上，機器避免在強烈噪音的環境下操作。

16・選用適當的電源插頭，並由電子技師將其按裝在機器上，且插頭必需插在接地線之插座上。

17・機器只允許被使用於指定用途上，其他用途是不允許的。

18・修改或變更機器必需依照安全規定及標準，同時採取有效的安全措施，本公司不承擔任何私自因修改或變更機器所引起損壞之責。

19・警告提示以兩種符號標示：

(1)・對操作員或服務人員之傷害危險為了避免觸電之危險，請勿打開馬達電器箱之外蓋，也不要觸摸電器箱裡面之零件。

(2)・必需特別注意事項

a・絕對不可在移開皮帶蓋，手指保護蓋或安全配件後，進行機器操作。

b・為了避免被機器纏住，當機器運轉中，您的手，頭髮及衣服，需遠離手輪，皮帶及馬達，此外這些部位周圍不可放置任何物品。

c・當您打開電源開關後或機器已在運轉中，絕不可將您的手放在針的下方或針線控線桿外蓋中。

15・To level the machine on the ground is essential in order to ensure a proper operation and lower noise. Avoid operating a machine at a noisy surrounding.

16・A proper power plug must be used with this machine by electrician. Please connect the power plug to a grounded receptacle.

17・This machine can only be used for the designed purpose. Other uses of this machine are not allowed.

18・Any modification or conversion made on this machine must be conformed with the safety standards and regulations. Precaution is necessary. We assume no responsibility for damage caused by modification or conversion of this machine.

19・Two safety warning signs are applies :

(1)・For the safety of operators and service persons, please don't open the cover of any electronic control boxes of motor or other devices and don't touch any components inside to avoid electrical shock hazards.

(2)・Always keep in mind :

a・Please never operate this machine with belt cover, finger guard or any safety device removed to avoid physical injury.

b・Please keep your hair, fingers and cloths away from the hand wheel “bobbin winder”, V belt and motor while the machine is in operation to prevent the risk of injuries by tangled into them.

c・Please never put your fingers under the needle or in the thread take up cover when you turn on the power switch or operate the machine.

d・當機器運轉中，梭頭高速轉動，為了避免對手可能引起之傷害，必需確定您的手保持遠離梭頭附近，此外，當更換梭子時，確定電源開關已關閉。

d・While the machine is in operation, the hook rotates at a high speed. Please keep your hands away from the area of hook to prevent possible injury to your hands. In addition, please make sure to turn off the power of the machine while changing bobbins.

e・當放置或抬起機頭時，小心勿將手置於機器中。

e・Be careful not to place your fingers inside the machine when moving / raising the machine head to avoid possible physical injuries.

f・為了避免機器突然啟動而引起可能意外，當機頭傾斜或移開皮帶蓋及皮帶時，請關掉機器電源。

f・Please turn off the power of the machine before tilting the machine head or removing the belt cover and the V belt to avoid possible accidents due to abrupt start of this machine.

g・如果您的機器是配置伺服馬達，機器於靜止狀態時，馬達是不會產生噪音的，為了避免機器突然啟動而引起可能意外，故請關掉機器電源。

g・The motor does not produce noise while the machine is at rest if your machine is equipped with a servo motor. So, please turn off the power of this machine to avoid possible accidents due to abrupt start of the machine.

h・為了避免觸電之危險，請絕不要在移開電源接地線後操作機器。

h・Never operate the sewing machine with the ground wire removed to avoid electrical shock hazards.

i・為了避免觸電或電子零件損壞而引起之可能意外，請先切斷電源，再插上或拔掉插頭。

i・Please turn the power switch off in prior to the connection or disconnection of the power plug to prevent possible accidents due to electric shock or damaged electronic components.

特別事項

為了避免機器故障及損壞請先確定以下事項

1・當您安裝好機器後，做第一次機器操作前，請徹底清潔機器。

2・清除運送途中累積之灰塵及溢出之油脂

3・確定電壓安裝正確。

4・確定電源插頭正確地接上電源。

5・當使用電壓與標示電壓不同時，請勿使用機器。

6・確定機器轉動方向是否正確。

警告：
以下各步驟，請先將電源關掉，以免因為機器突然啟動造成之意外。

WARNING

Please confirm the following to avoid malfunction and damage to this machine.

1・Clean this machine completely before putting this machine in operation for the first time after set up.

2・Clean all dust and oil gathered during transportation.

3・Confirm that the voltage are set correctly and phase (single or 3 phase) of motor.

4・Confirm that the power plug is properly connected to the power supply.

5・Never use the machine where the voltage type is different to the designated on shown on the motor nameplate.

6・Confirm that the direction of the rotation of the machine pulley is correct.

Warning :
Before doing the following operation or adjustment, please turn the power off to prevent accidents caused by abrupt start of the sewing machine.

油盤安裝 OIL PAN INSTALLATION

1. 油盤必需放置於桌板凹槽中之四角。(圖1)

1. The corners of the oil pan has to place on the four corners at the cut out groove of the machine table.(Fig.1)

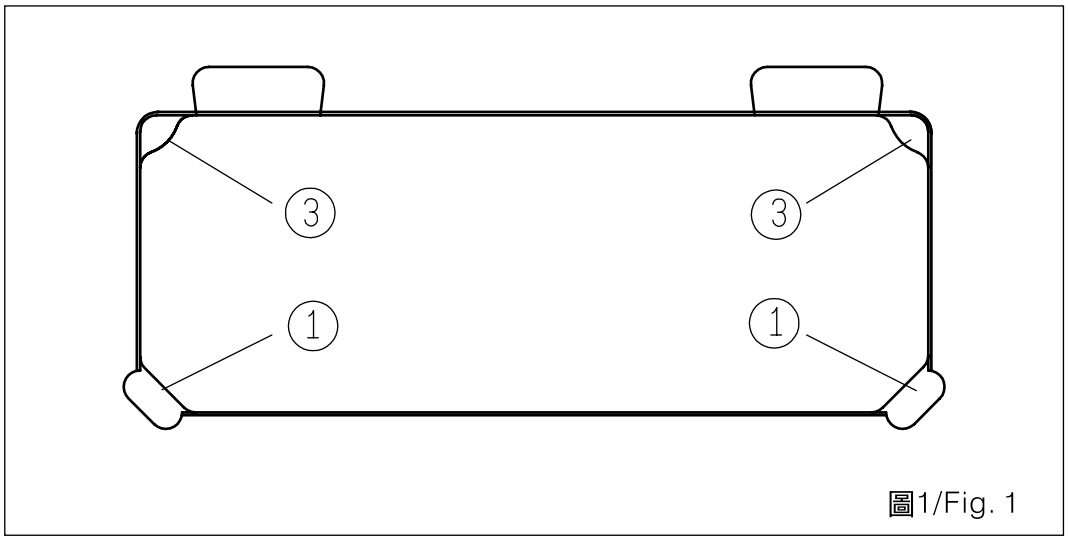

圖1/Fig. 1

2. 用下圖所示之釘子②，將兩個橡皮墊①固定於A邊(操作員方向)，再用底質為橡膠之膠帶將兩個緩衝墊③固定於B邊(有鉸鍊的方向)，然後再將油盤④放上。(圖2)

2. Use nails ② as illustrated to fix two rubber seats ① on side A (the operator's side). Use rubber based adhesive to fix two cushion ③ seats on the living side (side B). Place oil pan ④ on the fixed seats.(Fig.2)

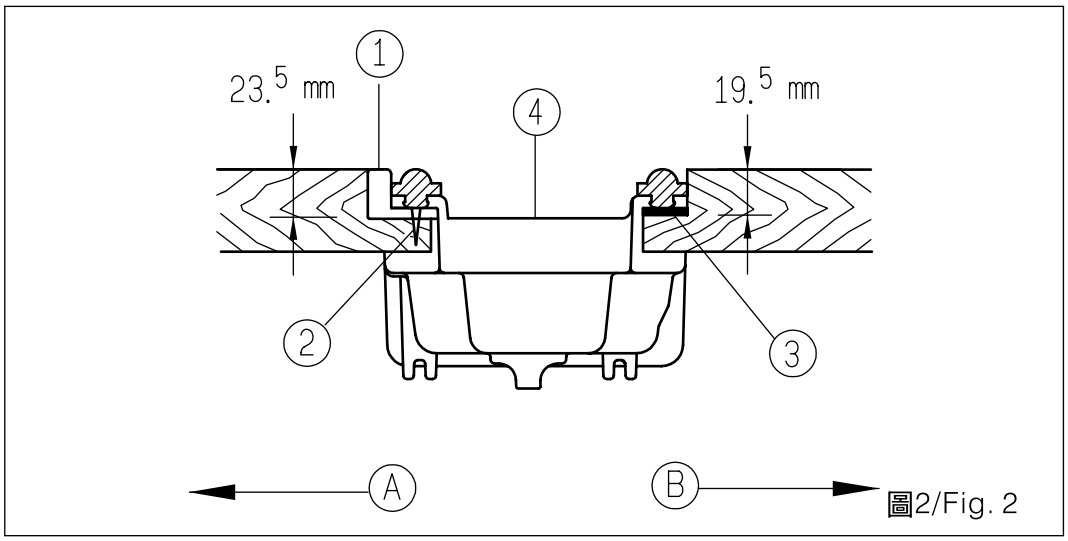

圖2/Fig. 2

3. 在將機頭放進四個角的緩衝墊③之前，先將鉸鍊①裝進機座兩個固定孔中，再將機頭安裝於桌板相對裝有橡膠墊②之二個開口中。(圖3.4)

3. Place the hinge ① into the two fixing holes before place the machine head onto the four cushions③ of the desk. Then, install the machine head onto the machine bed that has two openings with rubber cushion② of each.(Fig. 3, 4)

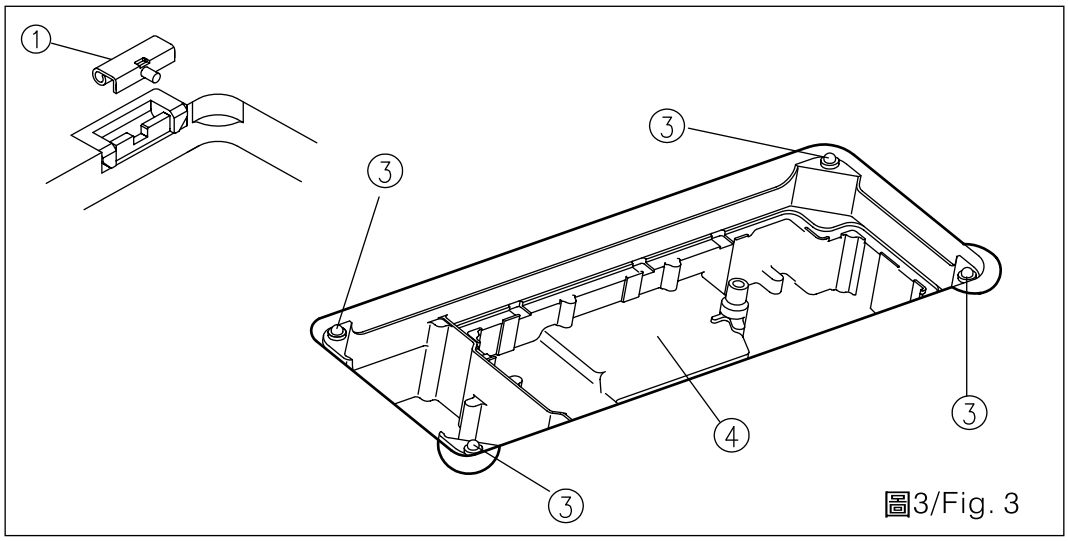

圖3/Fig. 3

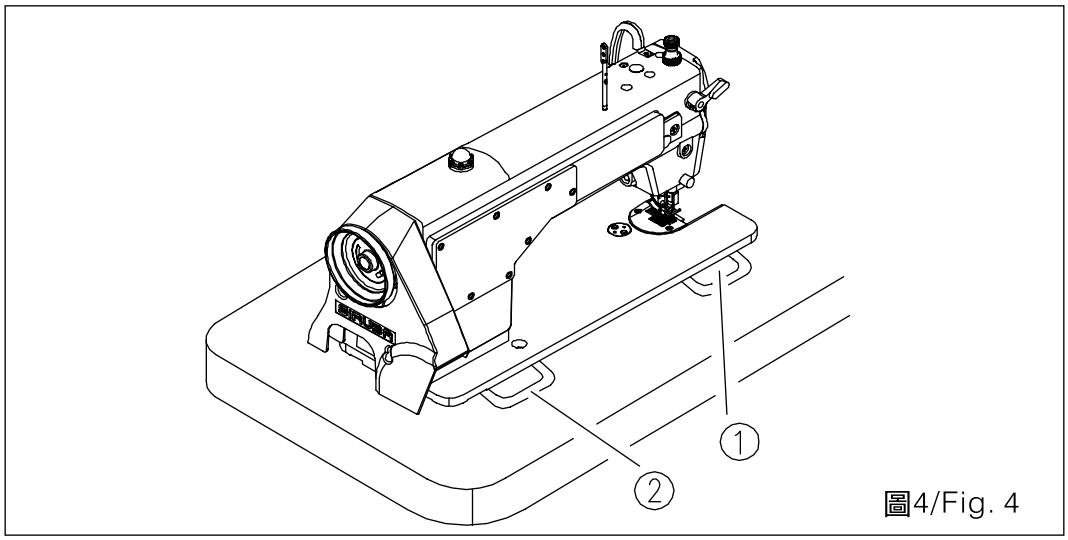

圖4/Fig. 4

潤滑 OIL LUBRICATION

1. 潤滑說明(圖5)
   (1) 使用專用油注入油盤中，液面到高點Ａ。
   (2) 當液面低於低點Ｂ時，再添加所指定之潤滑油。
   (3) 如果潤滑正常，當機器操作中，你可以從油鏡②中看到噴油現象。
   (4) 當新機器第一次運轉，或經過一段時間未使用，前10分鐘試車之轉速，請保持在3,000到3,500 S.P.M.之間。

1. Oil lubrication instruction (Fig.5)
   (1) Fill the oil pan with specified oil up to high mark Ａ.
   (2) Refill the oil pan with the specified oil if the oil level is lower below low mark Ｂ.
   (3) You will see oil splashing via oil sight window ② if the lubrication functions well when machine runs.
   (4) When running the machine first time or after a period of time, please run your machine at 3,000 S.P.M. to 3,500 S.P.M. for about 10 minutes.

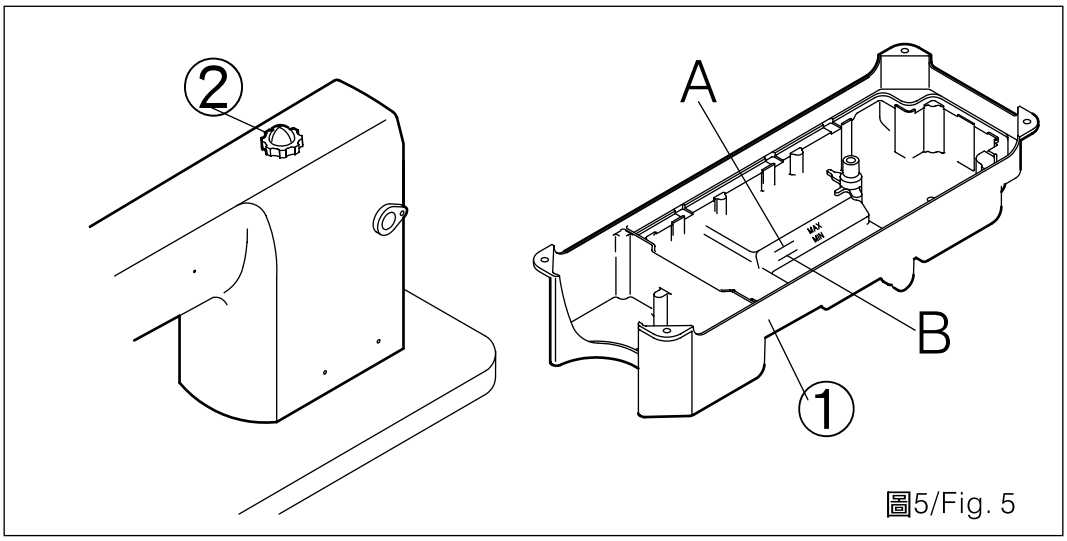

圖5/Fig. 5

2. 針棒 / 挑線桿供油量之調整(圖6)

(1) 由調整栓①調整針棒曲柄② / 挑線桿③之供油量。

(2) 將調整栓①順著 B 方向調整，使 A 點靠近針棒曲柄②，則供油量減少。

(3) 將調整栓順著 C 方向調整，使 A 點離開針棒曲柄②，則供油量增加。

2. Oil supply adjustment for needle bar/thread take-up lever (Fig.6)

(1) Turning adjust pin ① to adjust the supplied oil amount to the needle bar crank ② and the thread take up ③.

(2) To reduce supplied oil amount, turn the adjust pin ① in direction B to bring mark A close to the needle bar crank ②.

(3) To increase the supplied oil amount, turn the adjust pin ① in direction C to bring mark A away from the needle bar crank ②.

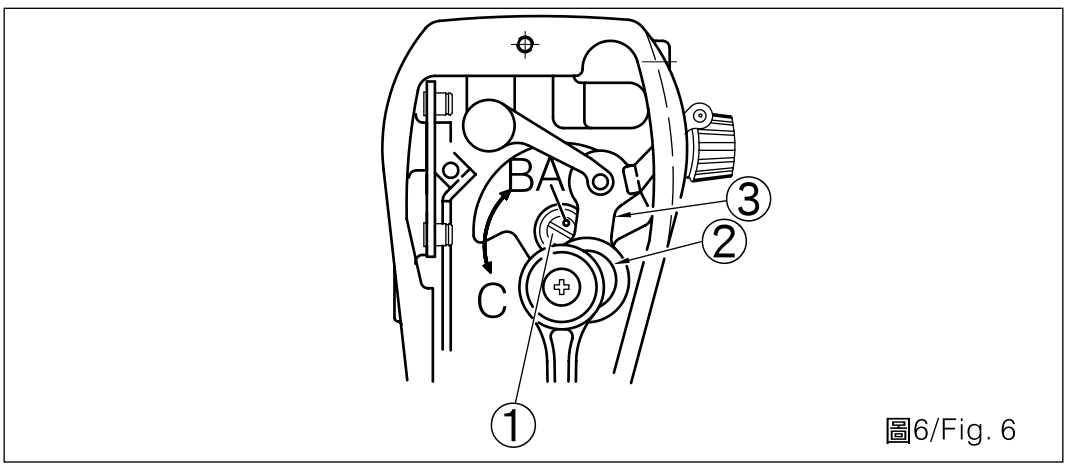

圖6/Fig. 6

3. 梭頭油量(噴油量)之調整

(1) 油量確認試紙。約25mm × 70mm，可使用任何材質之試紙。(圖7)

3. Adjust the oil amount of the hook (oiling amount).

(1) Oil splashing test paper is about 25mm × 70mm. Any material of test paper is accepted. The material will not affect results. (Fig. 7)

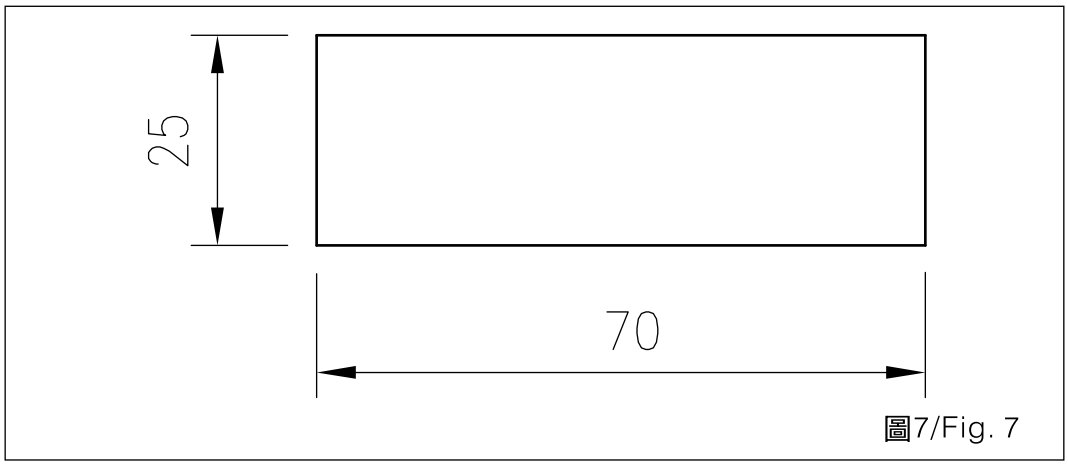

圖7/Fig. 7

(2) 確認油量位置。將試紙靠緊油盤壁，將油量確認試紙置於梭頭下方。(圖8)

(2) Confirm the oil amount. Place the test paper under the hook and fit the paper closely against to the wall of the oil pan. (Fig.8)

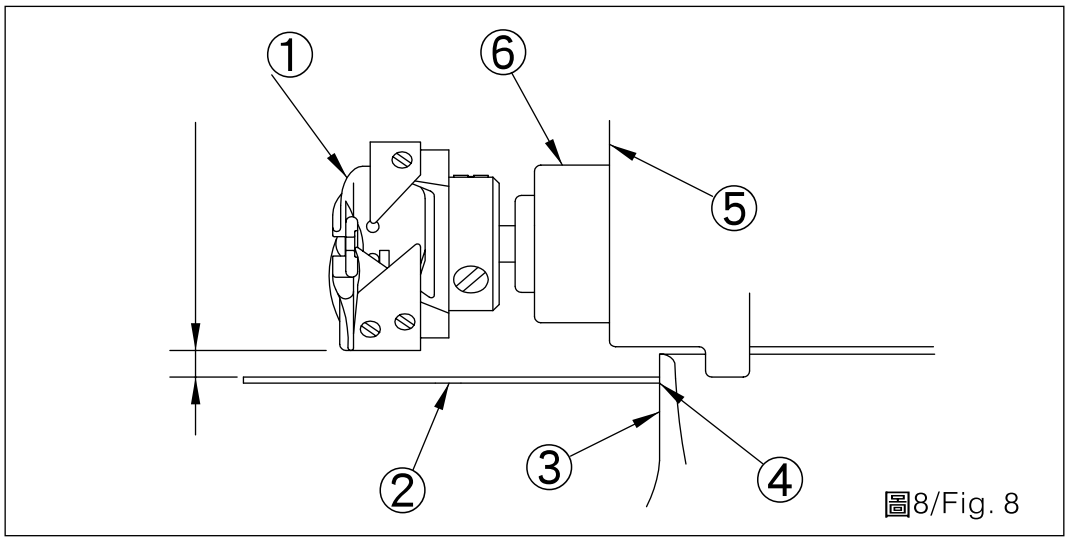

圖8/Fig. 8

①梭頭②紙③油盤
④接觸點⑤底座 ⑥襯套

①HOOK ②PAPER ③OIL PAN
④TOUCHING ⑤BASE ⑥BUSHING

當進行第(2)步驟時，移開滑板並非常小心，勿使手指觸及梭頭。

When doing step (2), carefully remove the sliding plate and do not touch the hook with fingers.

4・注意事項：

(1)・如機器尚未充份熱機，請先將機器空轉 3 分鐘暖車。

(2)・在機器運轉中，將油量確認試紙置於梭頭下方。(圖8)

(3)・確認油盤油量(油面)介於『高』與『低』刻度間。

4. Attentions：

(1) If the machine doesn't warm up enough, please run the machine 3 minutes idly.

(2) While the machine is running, place the oil splashing test paper under the hook.(Fig.8)

(3) Confirm that the height of the oil level in the oil pan falls between " HI " and " LOW ".

(4) 必需在 5 秒鐘內完成確認油量之動作(用手錶測時間)。

5. 適當油量顯示範例(圖9)

(4) Oil splashing observation test should be completed in 5 seconds.(Use a watch to check the time used.)

5. A sample of observations indicate the appropriate oil amount. (Fig.9)

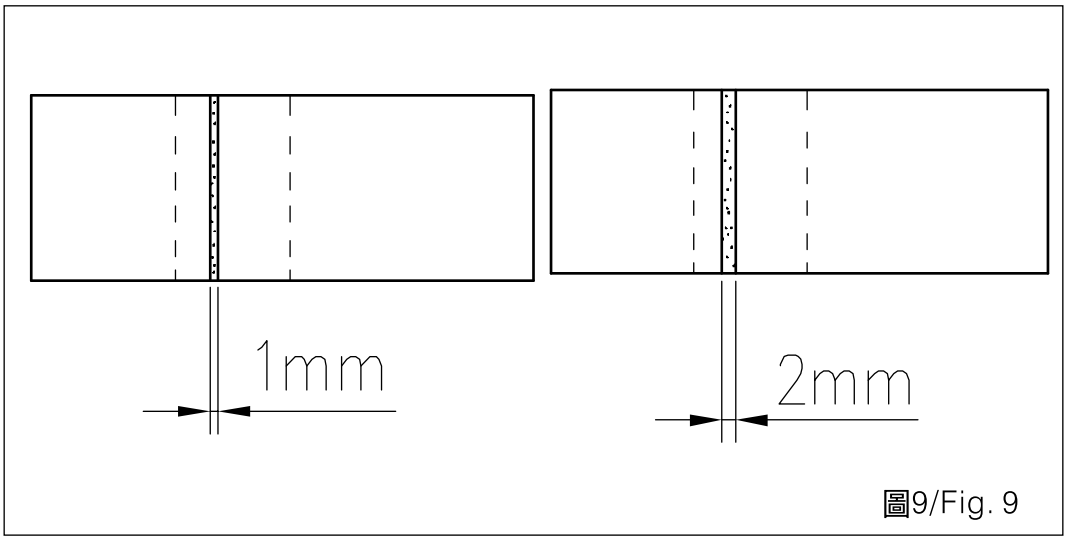

圖9/Fig. 9

梭頭噴油量約1mm適當油量(小)

L818—H：3mm
L818—M：1.5mm
L818—L：0.5mm

梭頭噴油量約2mm適當油量(大)

L818—H：6mm
L818—M：3mm
L818—L：1mm

(1) 油量顯示範例必需根據車縫布料與程序加以調整，切勿使梭頭油量過多或過少。油量過少，梭頭將卡住(梭頭將發熱)；油量過多，車縫物將可能沾染油污。

(2) 調整梭頭油量，油量必需達到3次測試都相同(在3張試紙上)。

Oil amount in the hook (small) as shown is approximated 1mm.

L818—H：3mm
L818—M：1.5mm
L818—L：0.5mm

Oil amount in the hook (large) as shown is approximated 2 mm

L818—H：6mm
L818—M：3mm
L818—L：1mm

(1) The amount of oil in the hook (ref. to the sample shown on Fig.9) should be adequately adjusted according to the sewing materials and processes. Insufficient amount of oil will cause the hook to cease and overheat. Excess amount of oil may cause the sewing product stained with oil.

(2) Adequate adjustment should be reached in the way that same oil splashing observation will be collected in 3 times on separate paper.

梭頭油量調整

1. 轉動裝在梭頭傳動大心上之油量調整螺絲，轉向"＋"號方向(順著Ａ方向)油量增加；轉向"－"號方向(順著Ｂ方向)油量減少。(圖10)

2. 梭頭油量適當調整後，將機器空轉30秒，以重新檢查確認梭頭油量。

ADJUSTING THE AMOUNT OF OIL IN THE HOOK

1. The oil amount adjustment screw is mounted on the hook driving shaft. Turn the screw counter clockwise toward "＋" direction (A direction) to increase the amount of oil supplied in the hook. Turn the screw clockwise toward "—" direction (B direction) to reduce the amount of oil supplied in the hook. (Fig.10)
2. After the amount of oil in the hook is properly adjusted, run the machine idly for 30 seconds to do oil splashing observation test to reconfirm the amount of oil in the hook.

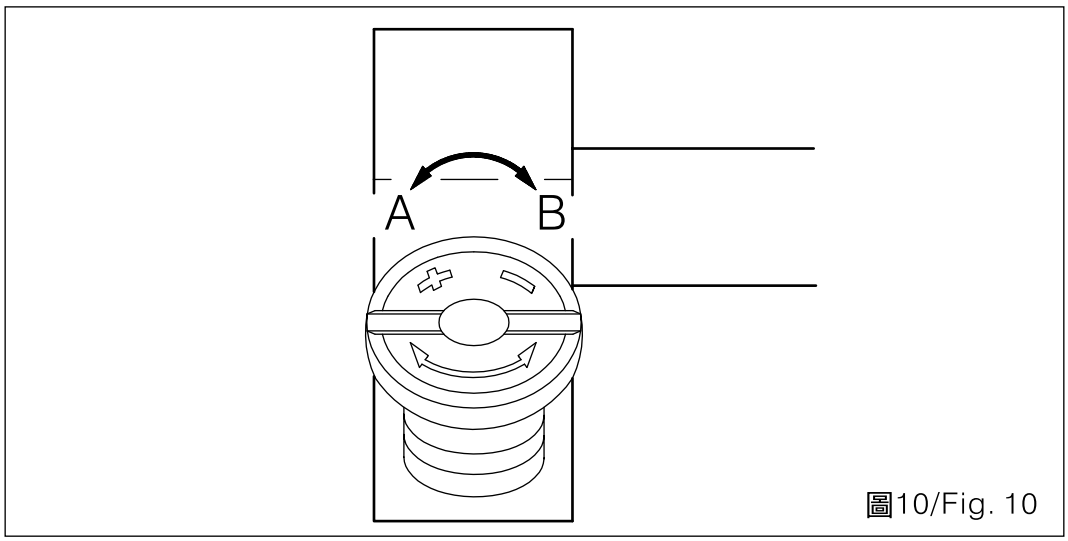

圖10/Fig. 10

針的安裝

請依線規格及布料選用正確型號的針。先關掉電源，再開始安裝針。(圖11)

1. 轉動手輪使針棒位於行程最高點。

2. 放鬆螺絲②並握住針①，使其針頸內弧部份Ａ正確面向右方Ｂ。並檢視針之長溝Ｃ確實面向左Ｄ。

INSTALLING THE NEEDLE

Choose a right needle size according to the type of the thread and the type of the material used.Turn the power off before placing the needle.(Fig.11)

1. Turn the hand wheel to raise the needle bar to its highest position.
2. Loosen screw ②, and hold the needle ① with its indented side A facing exactly to right in direction B, and make sure that long groove C of the needle is facing exactly to the left in direction D.

3. 依箭頭方向，將針插入針鐳並插到底。

4. 確實鎖緊螺絲②。

3. Place the needle into the hole on the needle bar all the way to the end of the hole in the arrow direction.

4. Firmly lock screw ②.

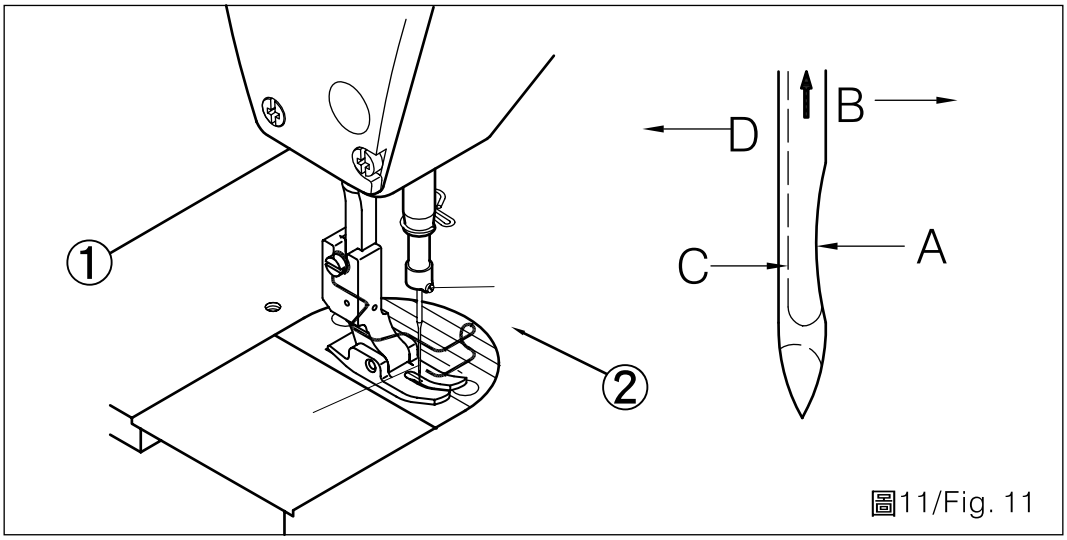

圖11/Fig. 11

梭子之安裝 SETTING THE BOBBIN

1. 安裝梭子於梭殼中，使捲線方向為如圖示方向。(圖12)

2. 將針線穿過縫隙 A 處，並朝 C 方向拉線，如此，針線將穿過壓力彈簧①，並由 B 處缺口穿出。

3. 當向 C 拉線時，梭子是順著箭頭所指方向轉動。

1. Set the bobbin in the bobbin case in the way that the thread wound direction is clockwise. (Fig.12)

2. Pass the thread through thread slit A, and pull the thread in direction C. The thread will be pulled under the tension spring ① and will be pulled out from notch B.

3. Be sure the bobbin rotates in the direction as the arrow shows when thread is pulled toward C.

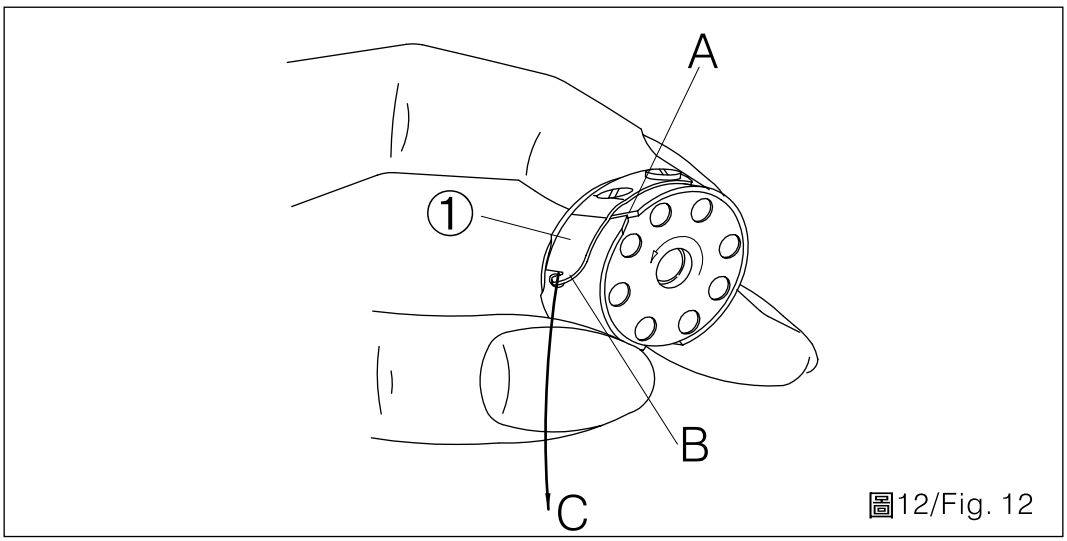

圖12/Fig. 12

機頭穿線 THREADING THE MACHINE

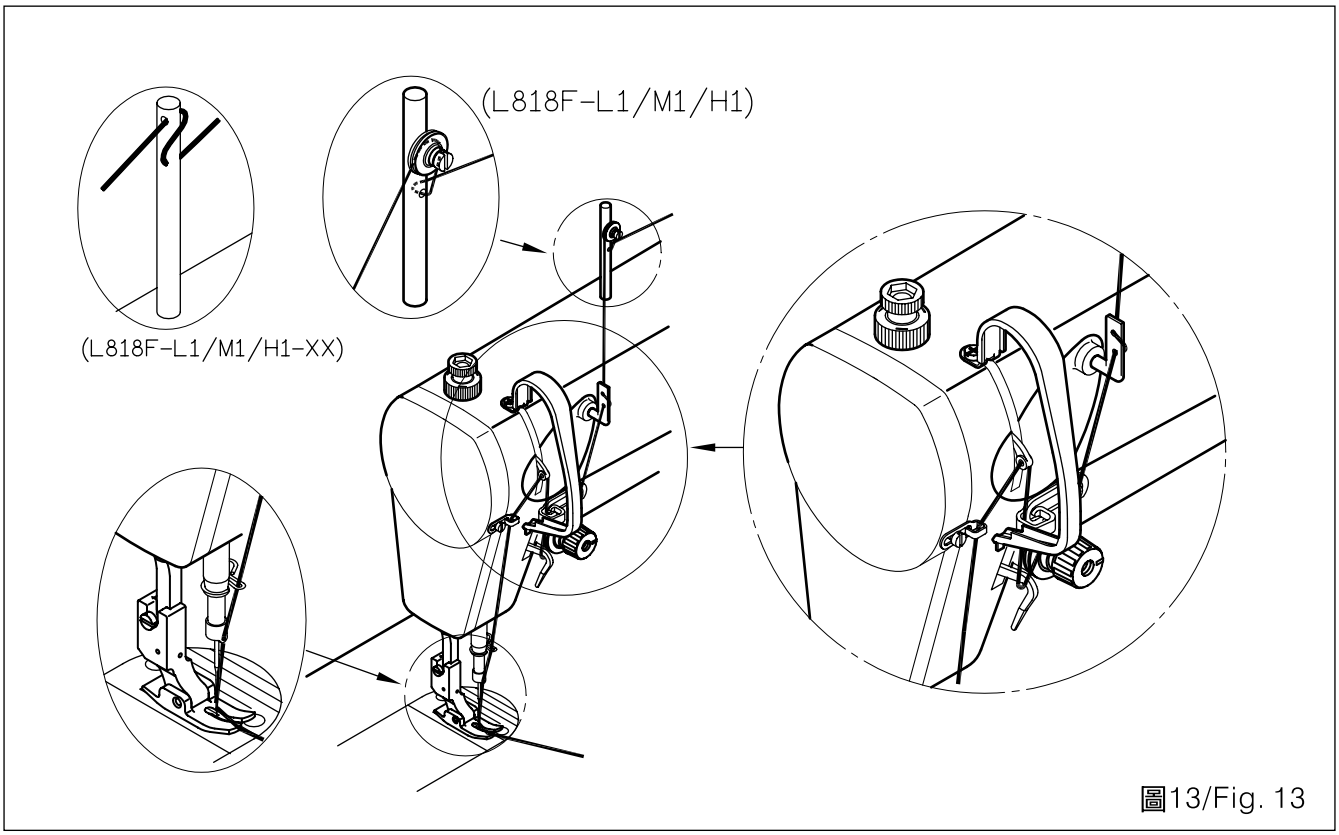

圖13/Fig. 13

針距調整 STITCH LENGTH ADJUSTMENT

1. 依箭頭指示方向轉動縫距調整鈕①，並將所需數字對準標點A。(圖14)

1. Turn stitch length dial ① as the arrow indicates to have the desired number align with mark A on the machine. (Fig.14)

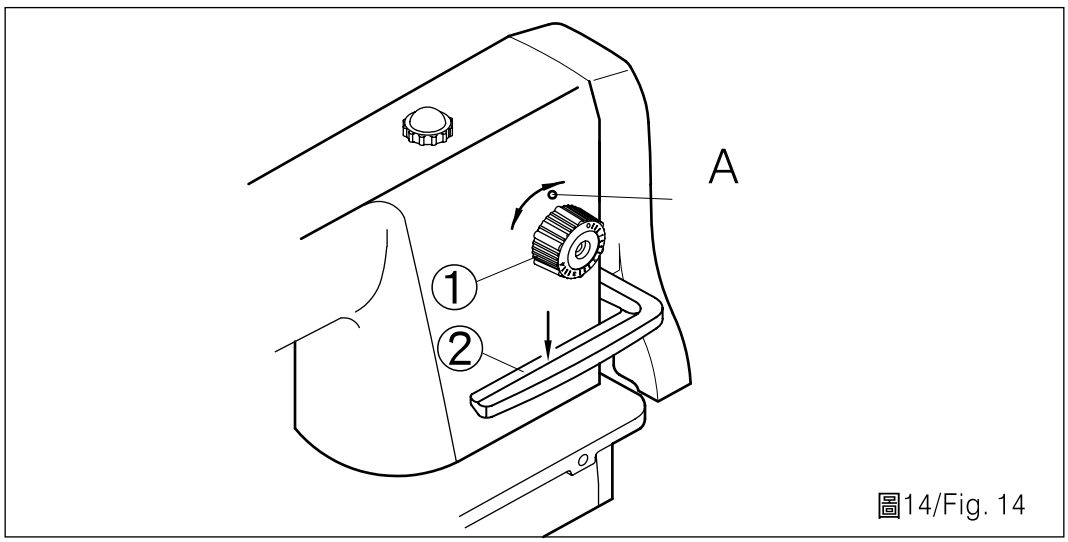

圖14/Fig. 14

2. 調整鈕上刻度單位是公釐。

2. The calibration on the dial is millimeters.

3. 當要調整縫距時，轉動縫距調整鈕①，同時將搖桿②往下壓。

3. Press the feed lever ② down and turn the stitch length adjustment dial ① to change stitch length.

線架安裝

THREAD STAND ASSEMBLY

1. 安裝線架組，並將其插入桌板孔。(圖15)

2. 鎖緊螺帽①，以固定線架。

1. Assemble the thread stand set before installing. Place the thread stand set onto the hole on the table top. (Fig.15)
2. Fix the thread stand with a nut ① locked under the table top.

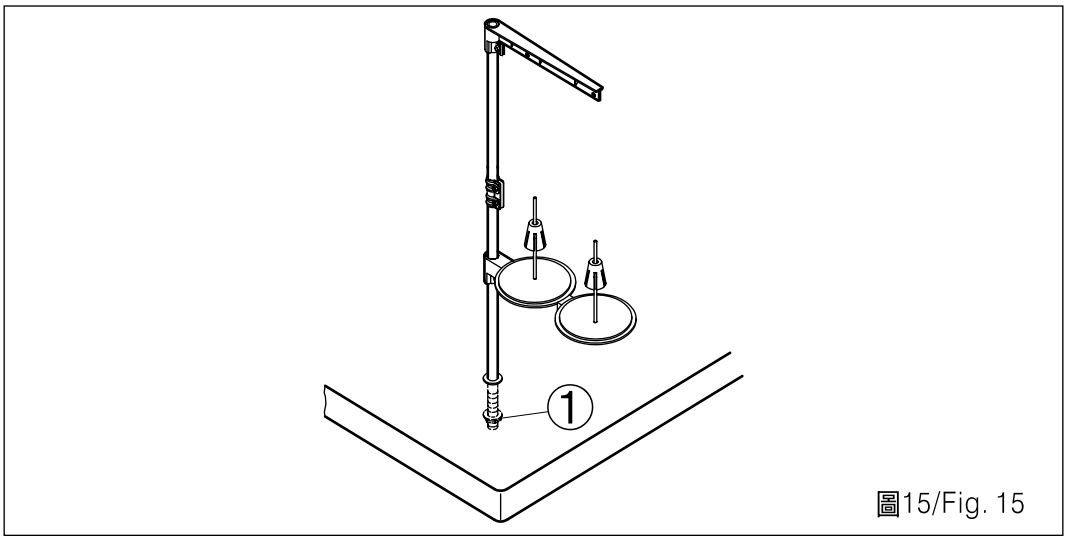

圖15/Fig. 15

皮帶蓋及梭子捲線器之安裝

THE BELT COVER AND THE BOBBIN WINDER MOUNTING

1. 在桌上鑽四個定位孔 A 、 B 、 C 、 D 。(圖16)

1. Grinding holes A , B , C , D on the table top.(Fig.16)

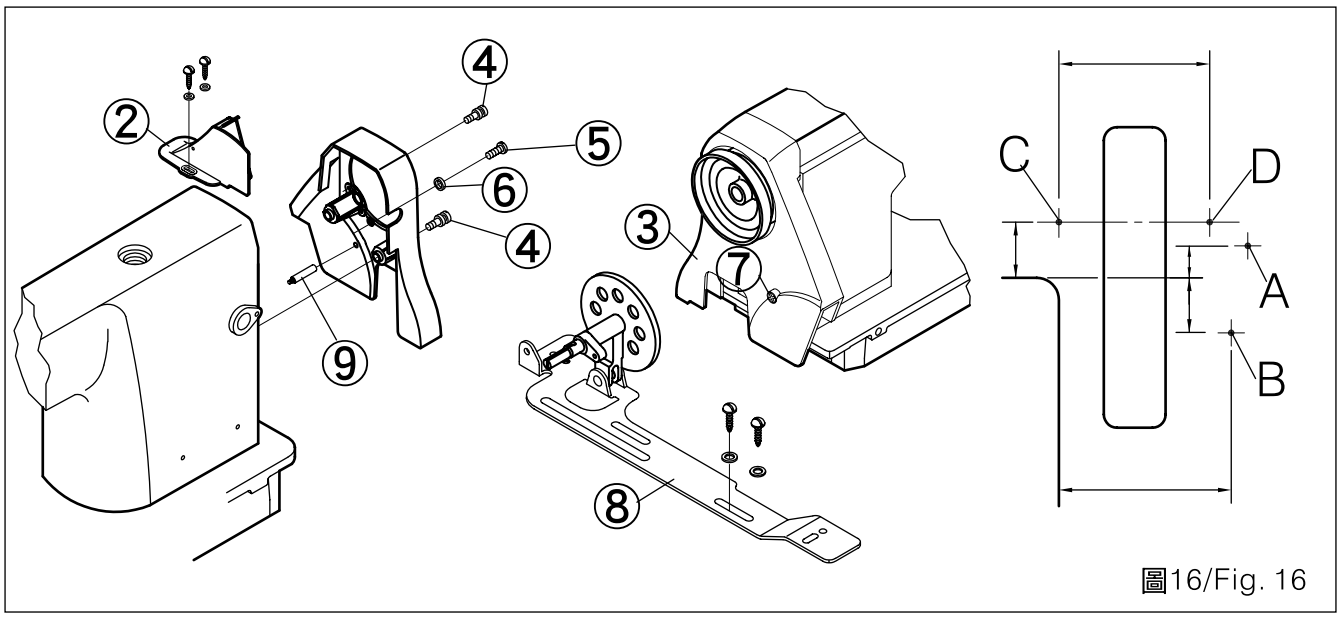

圖16/Fig. 16

2. 將皮帶蓋支撐桿，裝入栓孔中。

3. 將皮帶蓋③傾斜，由手輪後方成對角線裝上手輪。

4. 將皮帶蓋②，放在C、D兩定位孔上。

5. 用④、⑤螺絲及⑥墊片，將皮帶蓋固定於機體上並鎖緊。

6. 將⑦裝上皮帶蓋③。
7. 向後移動皮帶蓋②，使其橡膠墊觸及皮帶蓋③以木螺絲及墊片，將皮帶蓋②固定。

8. 將梭子捲線器⑧固定於定位孔A、B上。

2. Insert the belt cover support into the bolt hole on the machine.
3. Tilt the belt cover ③ then you can install the hand wheel diagonally from the rear of the hand wheel.
4. Put belt cover ② on locating holes C and D.
5. Use screws ④, ⑤ and washer ⑥ to fix the belt cover on the machine body and lock the screws tightly.
6. Place the ⑦ to the belt cover ③.
7. Move the belt cover ② backward and have its rubber cushion touch the belt cover ③. Fix the belt cover ② by wooden screw and cushion.
8. Mount bobbin winder ⑧ to holes A and B on the table top.

膝控押具提升器之調整

ADJUSTMENT OF KNEE-CONTROL PRESSER FOOT LIFTER

1. 使用膝控押具提升器，標準的押具提升高度是10mm。(圖17.18)

2. 可以使用膝控押具提升器調整螺絲①，將押具提高至13mm。

3. 當押具調整高度超過10mm時，請確認針棒最底部②是否會觸及押具③上部。

1. The standard lifting height is 10 mm by using knee-control presser foot lifter. (Fig.17,18)
2. By adjusting the screw ① at the knee controller, the presser foot can be lifted up to 13mm.
3. When the presser foot is adjusted to be lifted over 10mm, assure the bottom end of the needle bar ② in its lower position③ does not hit the presser foot.

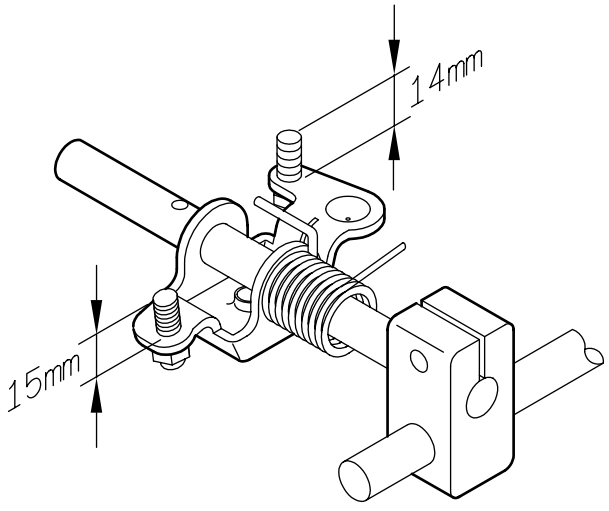

圖17/Fig. 17

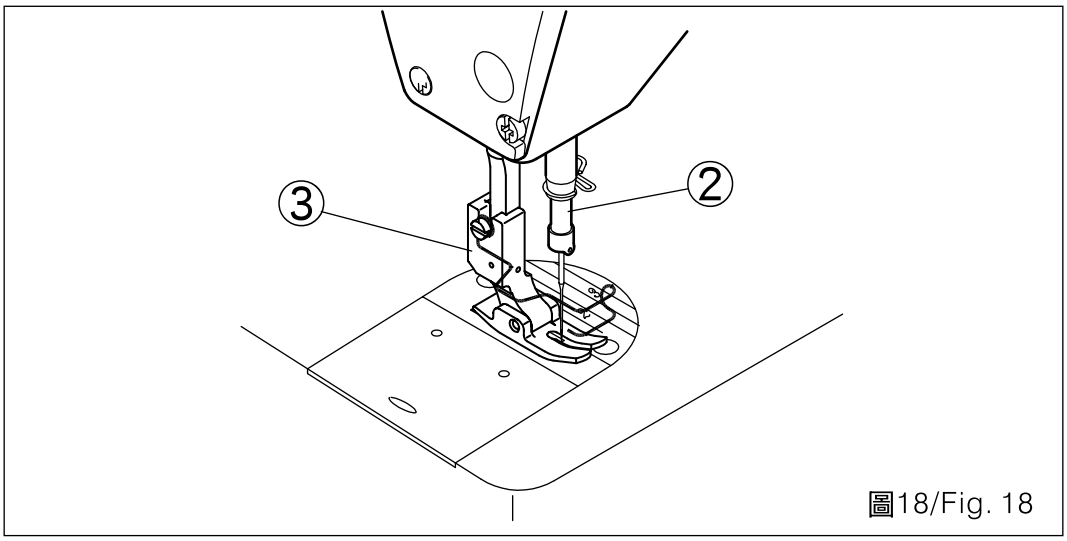

圖18/Fig. 18

腳踏板之操作

腳踏板依以下四步驟操作：(圖19)

1. 輕踩踏板，如B，機器將以低速運轉。
2. 進一步重踩踏板前方時，如A，機器以較高速運轉(如果預先設定有自動倒縫功能，機器將在完成倒縫後再高速運轉)。
3. 踏板恢復至原位置，如C，機器暫停轉動(針在上或下)。
4. 將踏板完全向後踩，如E，機器進行切線動作。
5. 注意事項：
   (1) 如果你的機器附有押具自動提升器，機器停止與切線動作之間會多了一個步驟，即當你輕輕後踩腳踏板，如D，押具向上提升，再往下踩，執行切線動作。

OPERATING THE PEDAL

The foot pedal is operated as the following 4 steps. (Fig.19)

1. Lightly tread the front part of the foot pedal shown as B in Fig. 19, machine runs at low sewing speed.
2. Further, tread the front part of the foot pedal shown as A in Fig. 19, Machine runs at high sewing speed. (The machine runs at high speed after it completes the backstitch if the automatic backstitch has been preset.)
3. Reset the pedal to its original position, shown as C in Fig. 19. Machine will stop (with the needle up or down.)
4. Fully depress the back part of the pedal shown as E in Fig. 19, so that machine trims threads.
5. Attentions：
   (1) One extra step is given between the machine stop and thread trimming steps if your machine is equipped with the auto presser foot lifter. When you lightly depress the back part of the pedal, shown as D, the presser foot goes up. The thread trimmer actuates if you further tread the back part of the pedal.

(2) 當倒縫動作執行時，如果將腳踏板回復到原位置，機器會在倒縫動作完成後才停止。

(3) 即使機器在高速或低速中，只要立刻將腳踏板往後踩，它都會執行正常的切線動作。

(4) 如果在機器執行切線動作後，即便立刻將腳踏板恢復原位置C，機器仍將完成切線動作。

(5) 當針停在下定位時，如果要將針上提，則將腳踏板後踩一次至D位置即可。

(2) Machine will stop after completing the backstitch if you relocate the pedal to its neutral position during executing the automatic backstitch.

(3) Whether the machine is under high speed or low speed sewing, you can make the maching doing thread trimming any time by tread down the back part of the pedal to do so.

(4) Even if you reset the foot pedal to its neutral position C immediately after the machine started thread trimming action, the machine will completely perform thread trimming.

(5) When the machine stops and makes the needle located at the lower dead end, tread the back part of the foot pedal once to D if you want to bring the needle up.

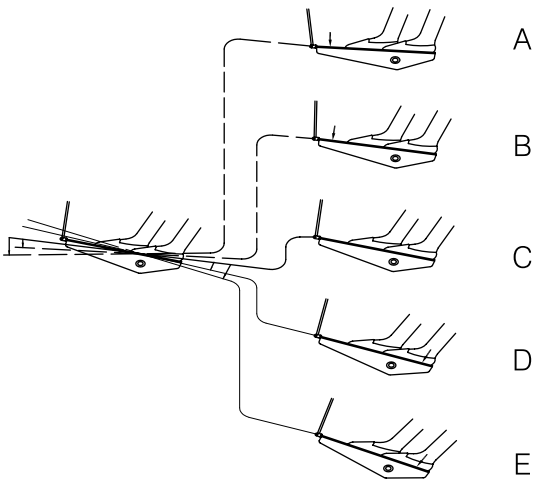

圖19/Fig. 19

針線梭線鬆緊度調整

NEEDLE THREAD/BOBBIN THREAD TENSION ADJUSTMENT

1. 針線鬆緊度調整(圖20)

(1) 依順時鐘方向(A方向)轉動針線鬆緊控制鈕①，切線後留在針頭之線量變短。

1. Needle thread tension adjustment (Fig.20)

(1) The left thread tail on the needle will be shorter after thread trimmed as you turn thread tension nut ①clockwise. (in A direction)

(2) 依逆時鐘方向(B 方向)轉動針線鬆緊控制鈕①，線量變長。

(3) 依順時鐘方向(C 方向)轉動針線鬆緊控制鈕②，針線鬆緊度變緊。

(4) 依逆時鐘方向(D 方向)轉動針線鬆緊控制鈕②，針線鬆緊度變鬆。

2. 梭線(底線)鬆緊度調整

(1) 依順時鐘方向(E 方向)轉動鬆緊控制螺絲③，底線鬆緊度變緊。

(2) 依逆時鐘方向(F 方向)轉動鬆緊控制螺絲③，底線鬆緊度變鬆。

(2) The left thread tail will be longer, as thread tension nut ① is turned counter clockwise (in B direction).

(3) Increase the tension on needle thread by turning thread tension nut ② clockwise (in C direction).

(4) Reduce the tension on needle thread by turning thread tension nut ② counter clockwise (in D direction).

2. Bobbin thread tension adjustment

(1) The bobbin thread tension will be increased as tension adjust screw ③ is turned clockwise (in E direction).

(2) The bobbin thread tension will be reduced as screw ③ is turned counter- clockwise (in F direction).

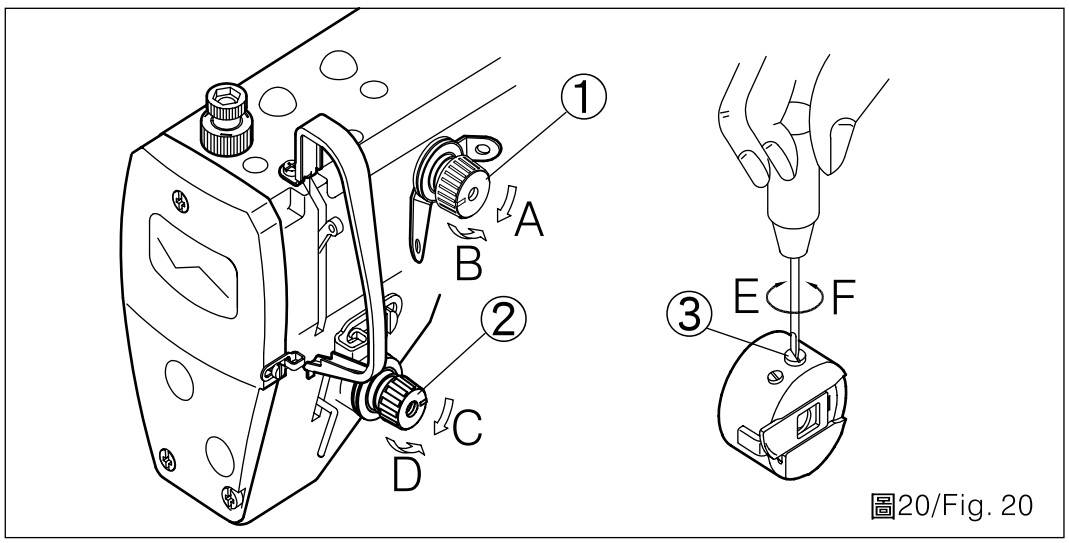

圖20/Fig. 20

控線組彈簧調整

THE THREAD TAKE UP SPRING ADJUSTMENT

1. 控線組彈簧①行程調整(圖21)

(1) 放鬆螺絲②。

(2) 依順時鐘方向(A 方向)轉動鬆緊控線鈕(3)，控線組彈簧行程將增加。

(3) 依逆時鐘方向(B 方向)轉動鬆緊控線鈕③，控線組彈簧行程將減少。

2. 控線組彈簧①拉力調整

1. Adjusting the stroke of thread take up spring ①. (Fig.21)

(1) Loosen screw ②.

(2) The stroke of the thread take-up spring will be increased as the tension knob ③ is turned clockwise (in A direction).

(3) The stroke will be decreased as the the knob ③is turned counter-clockwise (in B direction).

2. Adjusting the pressure of thread take up spring ①.

(1) 放鬆螺絲②，同時將控線彈簧組⑤拆下。

(2) 放鬆螺絲④。

(3) 依順時鐘方向(A 方向)轉動鬆緊控線鈕③，控線組彈簧拉力將增加。

(4) 依逆時鐘方向(B 方向)轉動鬆緊控線鈕③，控線組彈簧拉力將減少。

(1) Loosen screw ②, and remove thread tension disks ⑤.

(2) Loosen screw ④.

(3) The pressure will be increased as tension knob ③ is turned clockwise (in A direction).

(4) The pressure will be reduced as tension knob ③ is turned counter clockwise (in B direction).

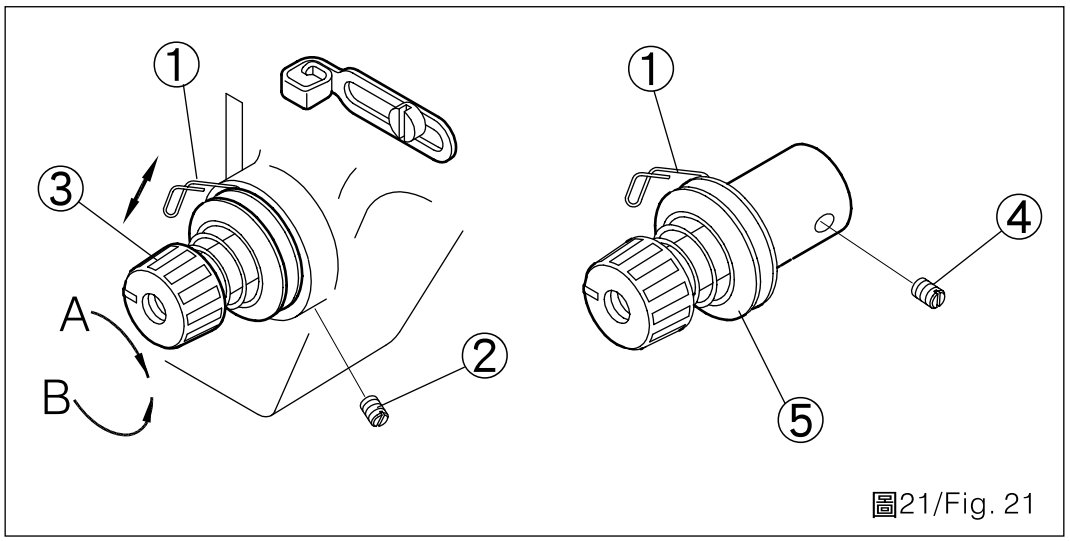

圖21/Fig. 21

押具提升桿

MANUAL PRESSER FOOT LIFTING LEVER

1. 將機器停止，順著 A 方向轉動押具提升桿①。(圖22)

2. 押具將上提升約 5.5 mm，並固定之。當順著 B 方向往下轉動押具提升桿①時，押具將降回至原位置。

1. Stop the machine and turn the presser foot lifting lever ① up (in A direction) to keep it up. (Fig.22)

2. The presser foot will be lifted up to about 5.5 mm and will remain at that position. Turn hand lifter lever ① down (in B direction) to release presser foot to its original position.

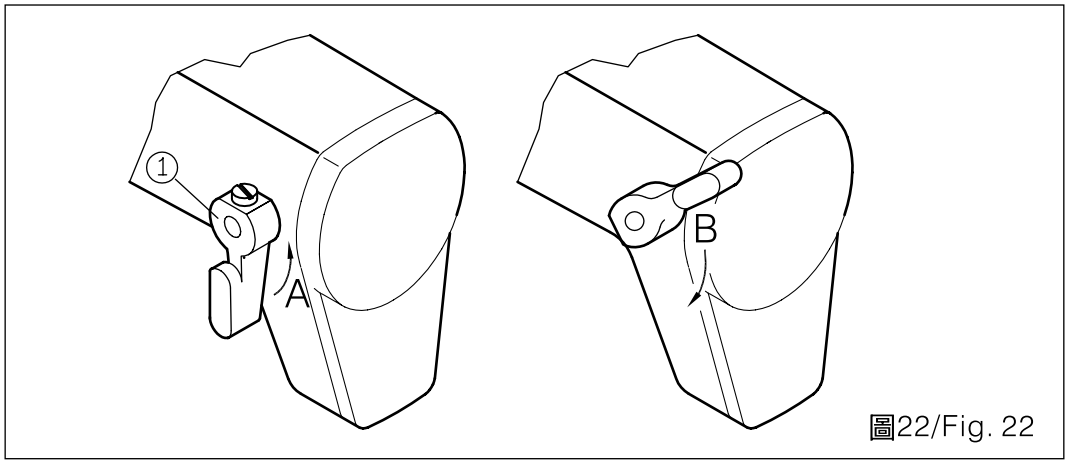

圖22/Fig. 22

押具壓力調整

1. 放鬆螺母②，依順時鐘方向(A 方向)轉動押具壓力調整鈕①時，壓力增加。(圖23)
2. 依逆時鐘方向(B 方向)轉動押具彈力調整鈕①時，壓力減少。
3. 調整完畢，鎖緊螺母②。一般布料押具壓力調整鈕之調整壓力為5 kg，厚布料為7 kg。(依布料之厚薄，適當調整押具之壓力，才能得到最佳之車縫效果)

ADJUSTING PRESSER FOOT PRESSURE

1. Loosen nut ②, Turn presser spring regulator ① clockwise (in A direction) to increase the presser foot pressure. (Fig.23)
2. Turn presser spring regulator ① counter clockwise (in B direction) to reduce the presser foot pressure.
3. Lock nut ② after adjustment is done.For regular fabric, the normal pressure of the presser foot should be set at 5kg, for heavy fabric is 7kg. (To have the best sewing result, please adjust the proper presser foot pressure according to the material.)

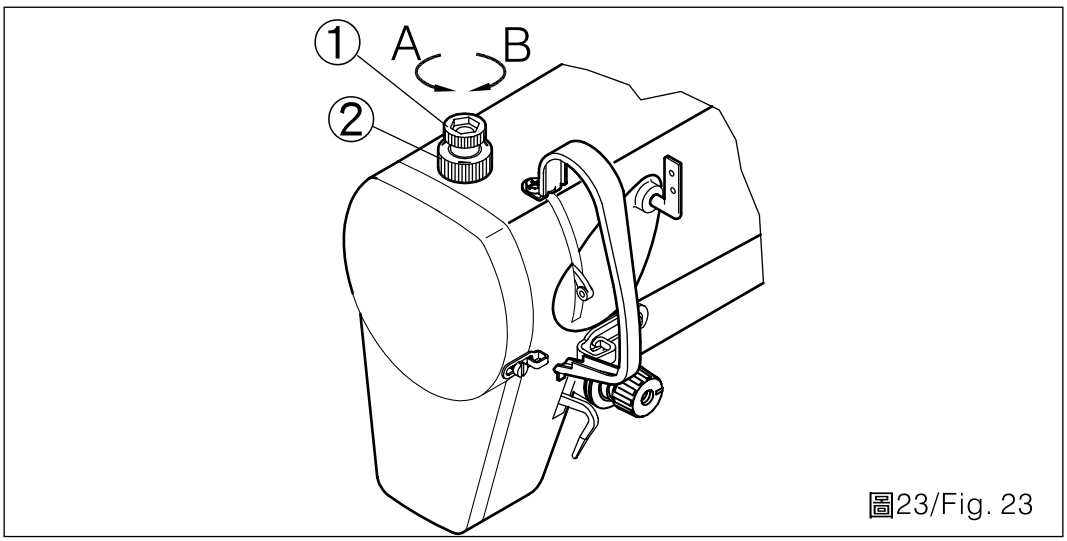

圖23/Fig. 23

送具時位調整

1. 放鬆偏心凸輪①上之②及③螺絲，再依箭頭或反箭頭方向轉動偏心凸輪①後，再鎖緊螺絲。(圖24)
2. 一般標準調整，是當送具下降至針板面時，將送具齒端上緣及針之針孔上緣調整與針板上緣成一線。

FEED TIMING ADJUSTMENT

1. Loosen screws ② and ③ on the feed eccentric cam ①, move the feed eccentric cam ① in the direction of the arrow or the opposite direction of the arrow, and lock the screws firmly. (Fig.24)
2. The standard adjustment is to level the top surface of feed dog and the top end of needle eyelet with the top surface of needle plate when feed dog descends below the needle plate.

3. 如果布料送料不足，將偏心凸輪①依箭頭方向轉動把送具時間提前。

4. 如欲增加車縫緊度，則將偏心凸輪①依反箭頭方向轉動把送具時間延後。

注意:
不可將偏心凸輪①移動過大，以免可能引起斷針。

3. If the fabric fed is not enough, advance the feed timing by moving the feed eccentric cam in the arrow direction.

4. To increase stitch tightness, extend the feed timing by moving the feed eccentric cam in the opposite direction of the arrow.

Attention:
Please do not move the feed eccentric cam too far to avoid needle breakage.

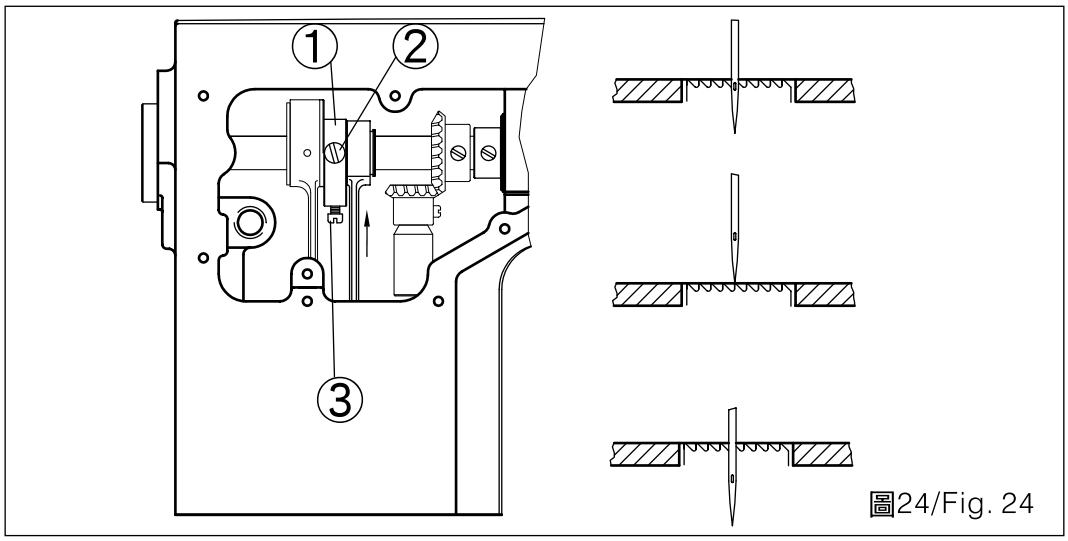

圖24/Fig. 24

送具傾斜度

ADJUSTING THE ANGLE OF TILT OF THE FEED DOG

1. 當在送料具軸上的記號A與B成一線時，送具之傾斜度即成水平狀態。(圖25)

1. When mark A on the feed bar shaft is aligned with mark B, the angle of tile becomes horizontal. (Fig.25)

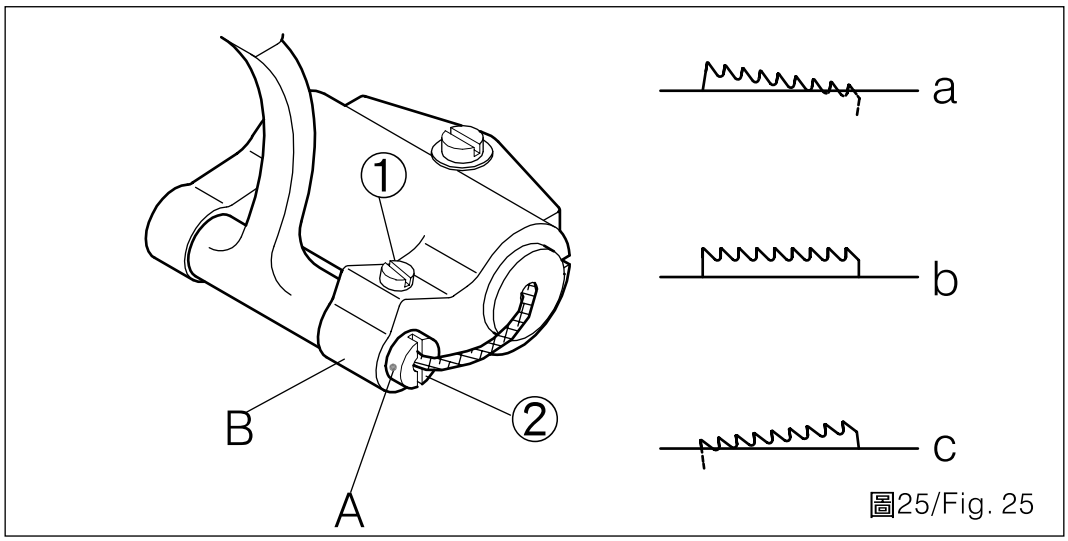

圖25/Fig. 25

2. 為了避免車縫起皺，以螺絲起子放鬆螺絲①，將送具偏心軸②依箭頭方向轉動90度，可降低送具前傾斜度a。

3. 為了避免布料送料不足，將送具偏心軸②依箭頭反方向轉動90度，可調低送具後傾斜度C。(厚布料調整時)

4. 送具傾斜度調整過後，押具高度將會改變，所以送具傾斜度調整後需再檢查其高度。

2. To prevent fabric from puckering, loosen the screw ① by a screw driver and turn the feed dog eccentric shaft ② 90 degrees in the direction of the arrow to reduce the front tilt angle of the feed dog.

3. To prevent uneven fabric feeding, please turn the feed dog eccentric shaft ② 90 degree opposite to the arrow direction. This could decrease the backward tilt angle of the feed dog “c” (while adjusting for the thick materials).

4. After adjusting the tilt angle of the feed dog, this will change the height of the feed dog. Therefore, please recheck its height after agjusting the tilt angle of the feed dog.

送具高度

ADJUSTING THE HEIGHT OF THE FEED DOG

1. 送具出廠調整高度為突出針板面(圖26)

1. The original set height of the feed dog is to have it just emerge from the needle plate. (Fig.26)

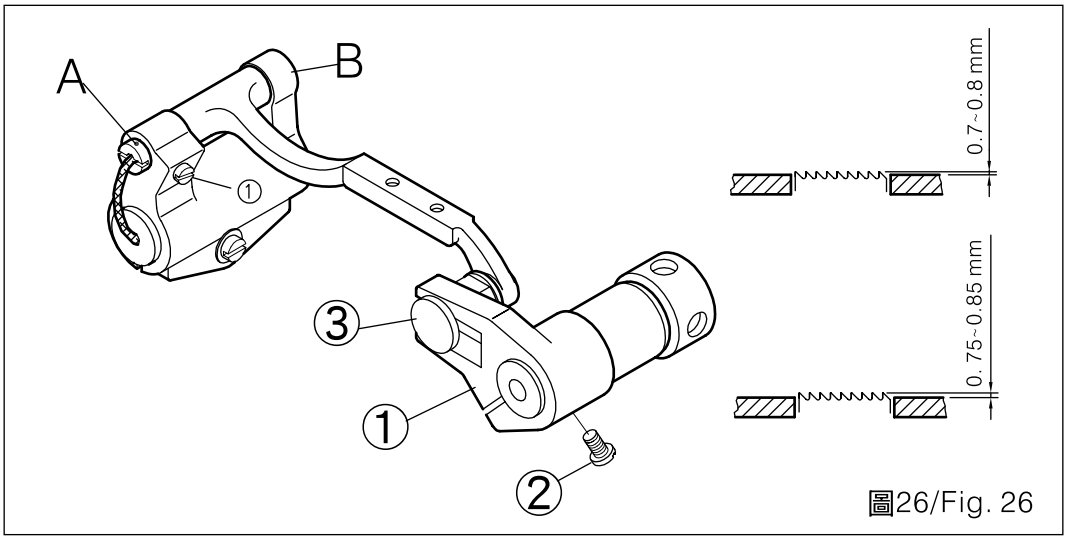

圖26/Fig. 26

一般形式：0.75 ~ 0.85mm
厚 布 料：1.15 ~ 1.25mm
薄 布 料：0.70 ~ 0.80mm

2. 如果送具太過突出，車薄布料時可能引起皺紋。

3. 送具高度調整：
(1) 放鬆曲柄①螺絲②。

Normal fabric：0.75 ~ 0.85mm
Heavy fabric：1.15 ~ 1.25mm
Thin fabric：0.70 ~ 0.80mm

2. For sewing thin fabric, fabric puckering may result if the feed dog jut out too much.

3. To adjust the height of the feed dog：
(1) Loosen screw ② on crank ①.

(2) 上下移動送具座加以調整。
(3) 再鎖緊螺絲②。

4. 勿使滑塊③與曲柄①之開口部份銜接不緊，否則曲柄①之開口部份將會磨損。

(2) Move the feed bracket up and down to adjust to get the best position.
(3) Lock screw ② securely.

4. The crank's ① opening will be worn out if the clamping pressure between roller ③ and the crank ① is not enough.

針與梭頭時位關係

CORRELATION BETWEEN NEEDLE AND HOOK

1. 針與梭頭時位調整如下：轉動手輪使針棒降至最低點(下死點)，並放鬆螺絲①。(圖27)

(1) 調整針棒高度：
- (DB針)將針棒②上之標線 A 對齊針棒下襯套③底部，然後鎖緊固定螺絲①。
- (DA針)將針棒②上之標線 C 對齊針棒下襯套③底部，然後鎖緊固定螺絲①。

(2) 調整梭頭之位置：
- (DB針)放鬆梭頭之3個固定螺絲，轉動手輪將針棒②上之標線 B 對齊針棒下襯套③底部。
- (DA針)放鬆梭頭之3個固定螺絲，轉動手輪將針棒②上之標線 D 對齊針棒下襯套③底部。

(3) 經上述調整步驟後，將梭頭尖⑤與針中心④對齊，且車針與梭頭尖之間隙應為 0.05 ~ 0.10 mm最為適當。

1. The timing adjustment between needle and hook is: turn the hand wheel to lower the needle bar down to the lower dead point of its stroke, and loosen the screw ① . (Fig.27)

(1) Adjusting the height of needle bar：
- (DB needle) Align mark line A on needle bar ② with the bottom edge of needle bar lower bushing ③, and then lock screw ①.
- (DA needle) Align mark line C on needle bar ② with the bottom edge of needle bar lower bushing ③, and then lock screw ①.

(2) Adjusting the position of the hook：
- (DB needle)Loosen the three fixed screws on the hook, and turn the hand wheel to align the mark line B on ascending needle bar ② with the bottom edge of needle bar lower bushing ③.
- When a DA needle is used loosen the three screws on the hook, turn the hand wheel, and align marker line D on ascending needle bar ② with the bottom edge of needle bar lower bushing ③.

(3) After the adjustments mentioned above, are made, align hook blade point ⑤ with the center of needle ④. Keep on ideal clearance of 0.05 ~ 0.1mm between the needle and the hook.

2. 更換梭頭時，先確認其零件代號再更換。

注意：

如果梭頭尖與針之間隙少於詳載值，梭頭尖將會受損；如果間隙過大，將會引起跳針。

2. Specify the correct part no. before replacing hooks.

Attention：

If the clearance between the blade point of hook and the needle is less than the identified value, the blade point of hook will be damaged. If the clearance is too large, stitch skipping will occur.

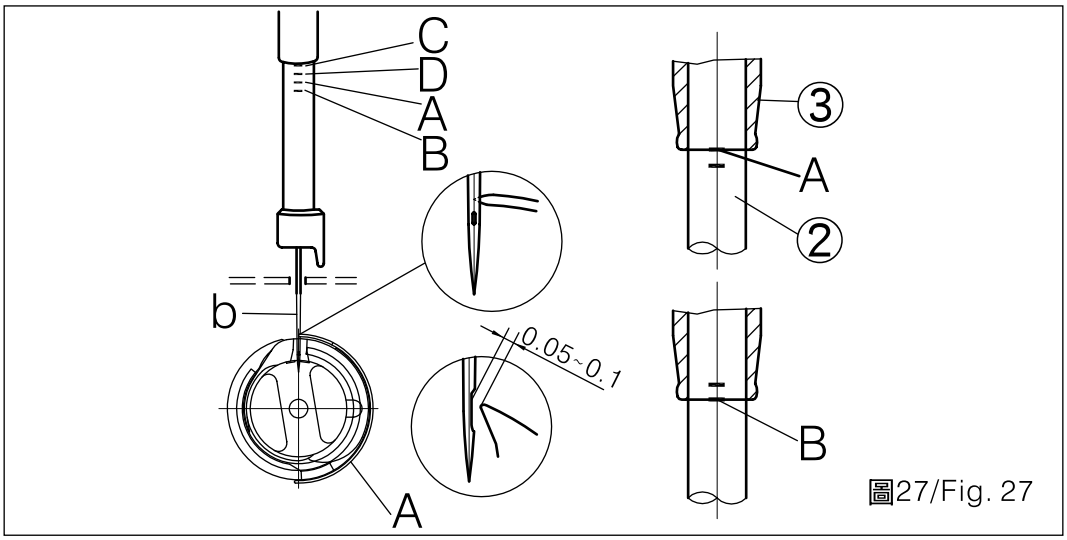

圖27/Fig. 27

押具高度調整

PRESSER FOOT HEIGHT ADJUSTMENT

1. 放鬆固定螺絲①，並調整押具高度及角度。(圖28)
2. 調整後，確實鎖緊固定螺絲①。

1. Loosen screw ①, and adjust the height of presser foot and its orientation. (Fig.28)
2. After adjustment, lock the screw ① securely.

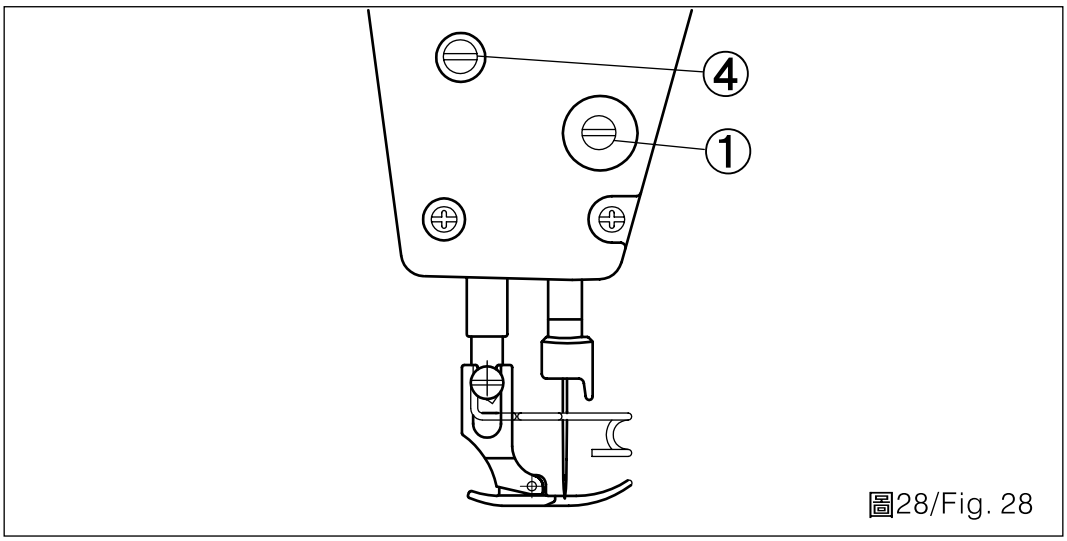

圖28/Fig. 28

切線刀按裝

COUNTER KNIFE ADJUSTMENT

當上固定刀①變鈍時，請依C圖所示將上固定刀①再磨銳，並正確重新安裝。(圖29, 30)

1. 當上固定刀安裝位置往A方向移動時，切線後線長增加。

2. 當上固定刀安裝位置往B方向移動時，切線後線長減少。

注意：

當重磨刀片時，拿握刀子要特別小心。

a・活動刀
b・針中心
c・標準：4.0 mm
d・標準：4.5 mm

When the counter knife ① becomes dull, resharpen the counter knife ① as illustrated in C, and reinstall it properly. (Fig.29, 30)

1. Moving the mounting position of counter knife to the right (in direction A) from its standard mounting position will have longer thread tail after trimming.
2. Moving the mounting position to the left (in direction B) will have shorter thread tail.

Attention：

Be sure to resharpen the counter knife with care.

a・Moving knife
b・Center of needle
c・Standard：4.0 mm
d・Standard：4.5 mm

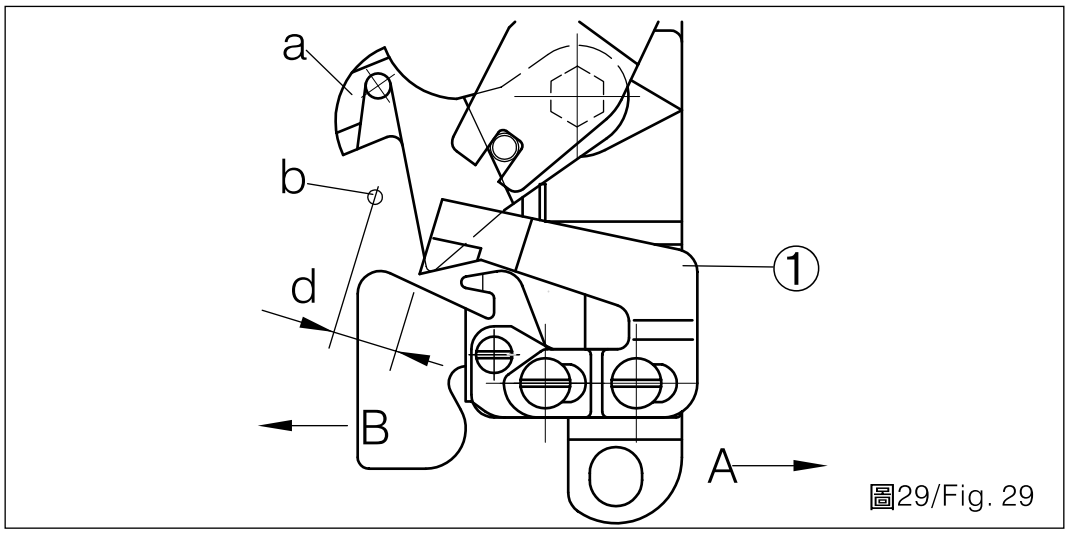

圖29/Fig. 29

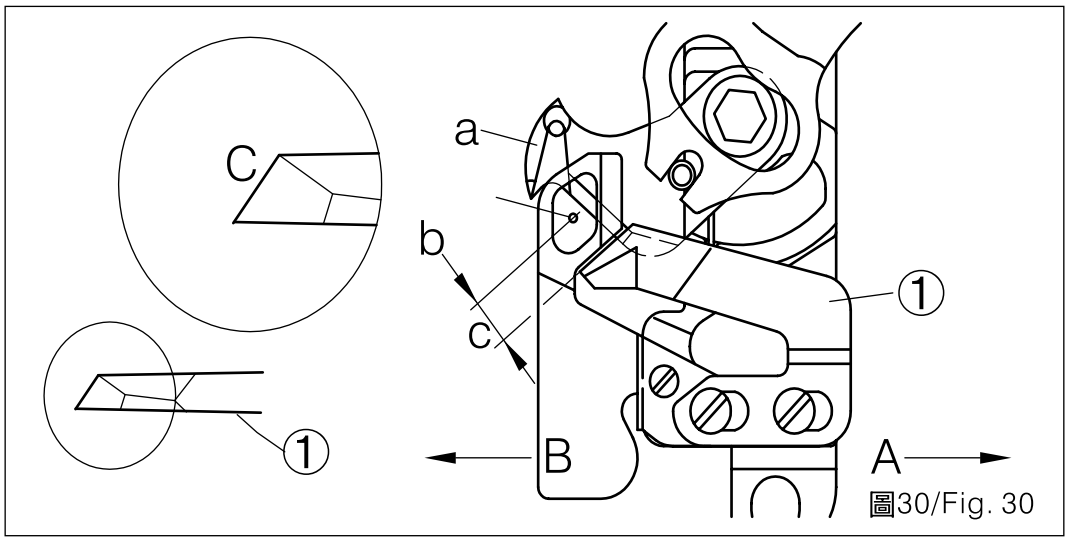

圖30/Fig. 30

導線片之調整

1. 當車縫厚布料時，將導線片①往左(A 方向)移動，以增加挑線桿之拉線量。(圖31)
2. 當車縫薄布料時，將導線片①往右(B 方向)移動，以減少挑線桿之拉線量。
3. 一般導線片①是放在其標線 C 與螺絲中心對齊位置。

THE THREAD TAKE UP STROKE ADJUSTMENT

1. Move thread guide ① to the left (in direction A) to increase the amount of thread pulled out by the thread take-up when sewing heavy fabric. (Fig.31)
2. Move thread guide ① to the right (in direction B) to decrease the amount of thread pulled out by the thread take-up when sewing light-weight materials.
3. In general, thread guide ① is positioned to have the marker line C aligned with the center of the screw.

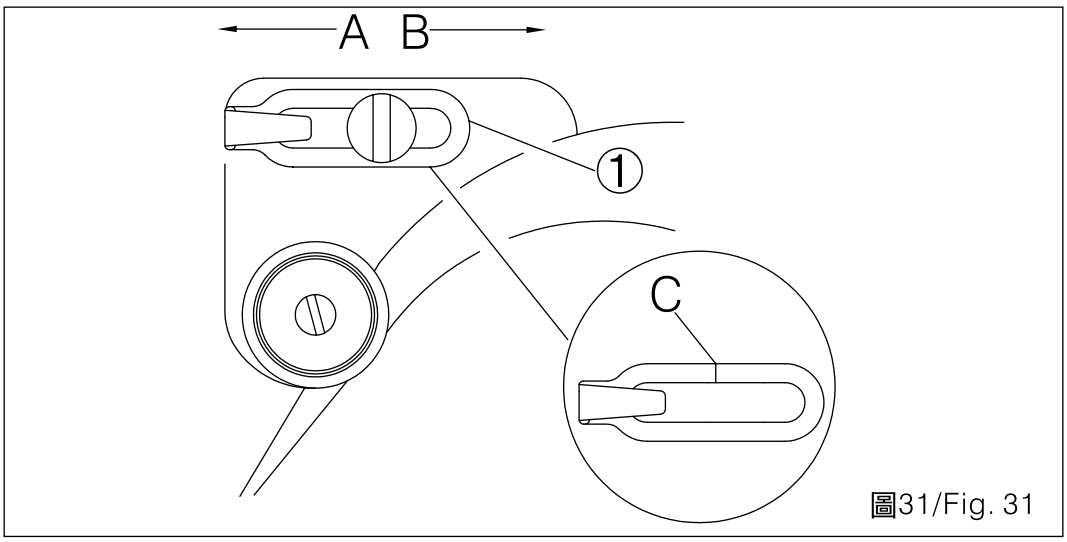

圖31/Fig. 31

停針位置調整

1. 切線後，車針上定位(圖32)

   (1) 標準定針位置：針標準停止位置，將機頭上之標記 A 與手輪上之標記 B 對齊即可。

   (2) 停針時間調整：將車針停在最高點，放鬆螺絲①，在橢圓孔內調整螺絲。

   ・將螺絲往 C 方向轉動，車針停止時間提前。

NEEDLE STOP POSITION ADJUSTMENT

1. Needle “UPPER” stop position after trimming. (Fig.32)

   (1) Standard Stop Position：the standard needle stop point is simply to align the mark A on the machine head with the mark B on the hand wheel.

   (2) Timing Adjustment of Needle Stop：Stop the needle at its upper dead point, and then loosen the screw ①) and adjust the screw in the elliptic hole.

   ・Move the screw in direction C to advance the needle stop timing.

・將螺絲往D方向轉動，車針停止時間延後。

・Move the screw in direction D to delay the needle stop timing.

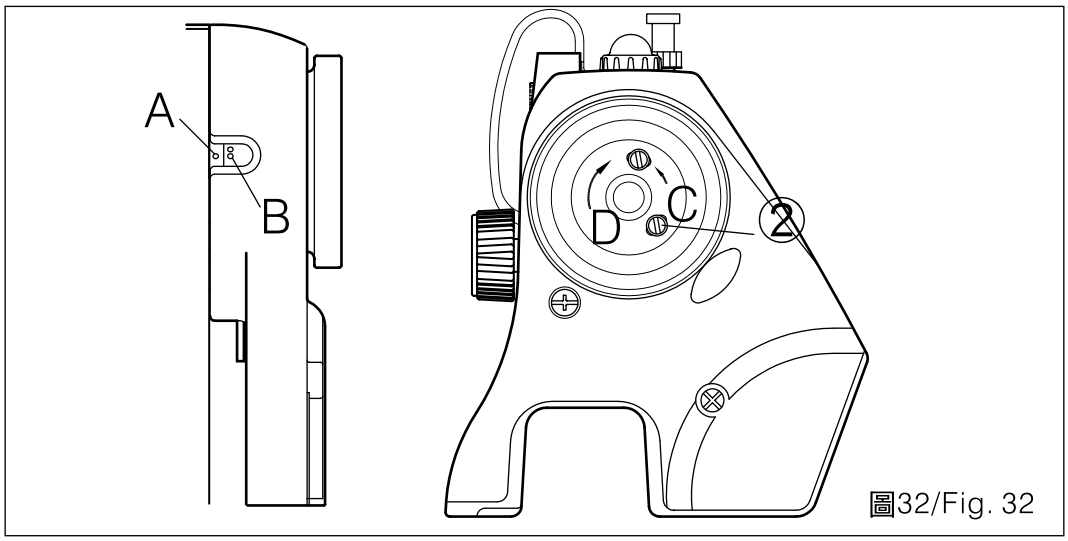

圖32/Fig. 32

2. 車針下定位(圖33)
當腳踏板前踩後，再回到原位置，車針之下停位置，將車針①停於最低點，放鬆螺絲②在橢圓孔內調整螺絲。

(1) 將螺絲往A方向轉動，車針停止時間提前。
(2) 將螺絲往B方向轉動，車針停止時間延後。

2. Needle “DOWN” stop position (Fig. 33)
When treading the pedal forward and returned to the neutral position, the needle DOWN stop position can be adjusted as the followings. Stop the needle ① at its lower dead point, and then loosen the screw ② and adjust the screw in the elliptic hole.

(1) Move the screw in direction A to advance the needle stop timing.
(2) Move the screw in direction B to delay the needle stop timing.

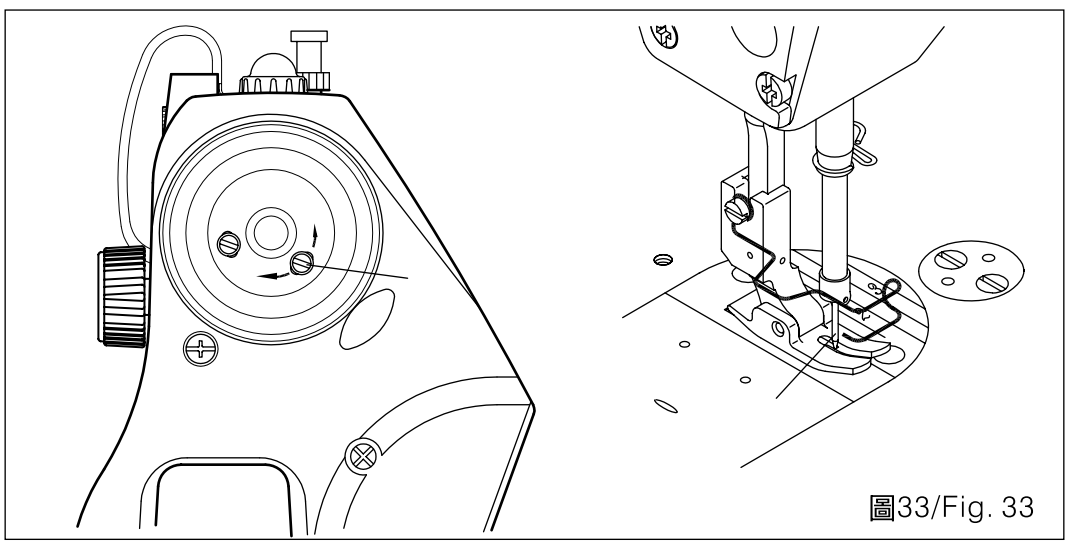
圖33/Fig. 33

注意！以上調整：
(1) 螺絲放鬆後，請勿操作機器。

Attention ! About above adjustments:
(1) Do not operate the machine after screws are loosened.

(2) 只放鬆螺絲，請勿拆下螺絲。

(2) Do not remove screw; only loosen the screw.

腳踏板壓力及行程

ADJUSTING THE TENSION ON PEDAL AND PEDAL STROKE

1. 腳踏板前踩位置的壓力調整。(圖34)

   (1) 腳踏板壓力可經由改變腳踏板壓力調整彈簧①之安裝位置而改變。

   (2) 將彈簧勾移往左邊，壓力減少

   (3) 將彈簧勾移往右邊，壓力增加。

2. 腳踏板後踩位置的壓力調整。

   (1) 壓力可經由調整螺絲②調整。

   (2) 將調整螺絲依箭頭方向，壓力增加。

   (3) 將調整螺絲反箭頭方向，壓力減少。

3. 腳踏板行程調整
   當將連接桿③移往左邊孔方向時，腳踏板行程減少。

1. Adjusting the front part treading pressure of the pedal. (Fig. 34)
   (1) The pressure of the pedal can be adjusted by changing the mounting position of pedaling pressure adjust spring ①.
   (2) The pressure is reduced when moving the spring hook to left side.
   (3) The pressure is increased when moving the spring hook to right side.
2. Adjusting the rear part treading pressure of the pedal.
   (1) The rear part treading pressure of the pedal can be adjusted by driving the regulator screw ②.
   (2) The pressure is increased when you follow the direction on the screw to drive it.
   (3) The pressure is decreased when you drive the screw by the opposite direction of the arrow on the screw.
3. Adjusting the pedal stroke.
   The pedal stroke is shorter as connecting rod ③ moved to the left holes.

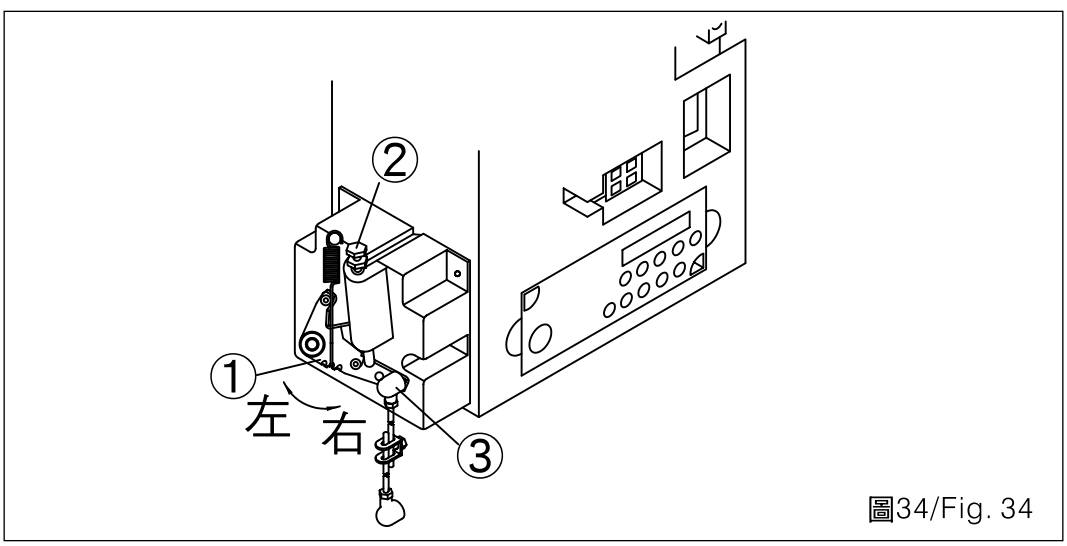

圖34/Fig. 34

腳踏板調整

1. 連接桿安裝(圖35)
   依圖箭頭方向所示，左右移動腳踏板③，使馬達控制桿與連接桿②成一直線。

2. 腳踏板傾斜度調整
   (1) 腳踏板斜度可藉著改變連接桿長度而自由調整。

   (2) 放鬆調整螺絲④調整連接桿②長度。

ADJUSTING THE PEDAL

1. Install the connecting rod(Fig. 35)
   Move the pedal③ left and right as the arrow shows in the figure in order to align the motor control lover ① with the connecting rod ②
2. Adjusting the slope of the pedal.
   (1) The tilt degree can be changed and adjusted freely by chinging the length of the connecting rod.
   (2) The length of the connecting rod ② is adjucted by loosening the adjusting screw ④.

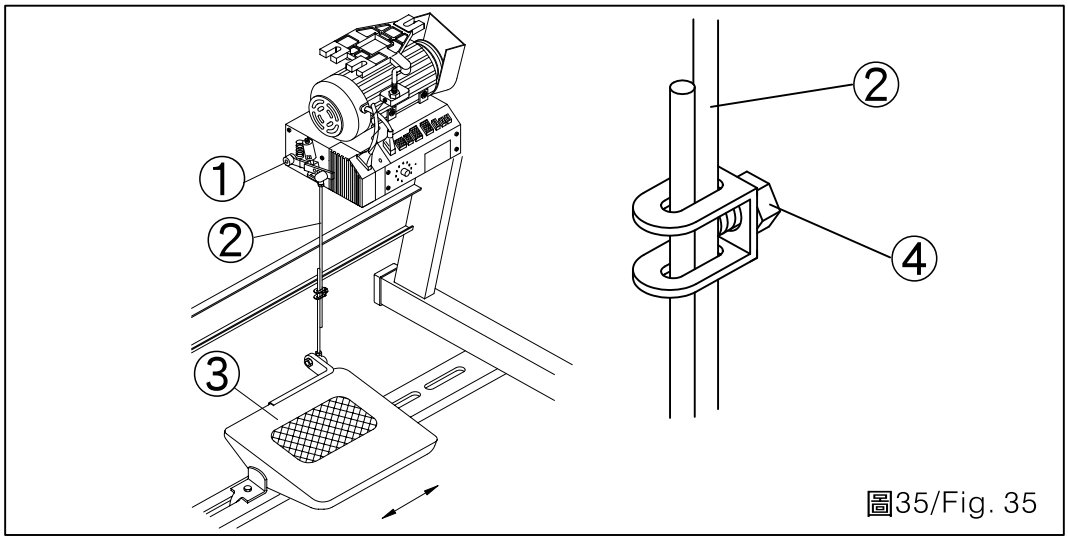

圖35/Fig. 35

單觸式倒縫機構

1. 按下開關①，機器啟動倒縫功能(圖36)。

2. 只要開關持續被按著，機器繼續執行倒縫功能。

3. 開關放鬆，機器即恢復一般車縫功能。

OPERATING THE ONE TOUCH TYPE REVERSE FEED STITCHING MECHANISM

1. Press the switch lever ① to start the back stitch function.
2. As long as the switch lever is pressed, the sewing machine will continue doing back stitch.
3. Release the switch lever, and the sewing machine will resume the normal sewing function.

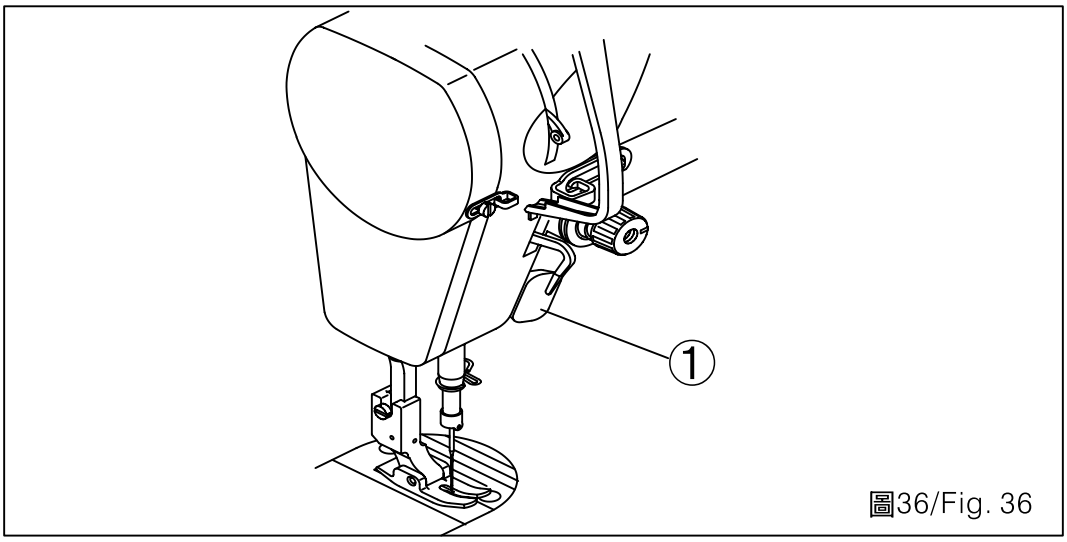

圖36/Fig. 36

撥線桿 ADJUSTING THE THREAD WIPER

1. 撥線桿位置(圖. 37，38，39)
請依車縫布料厚薄，調整撥線桿位置。

調整步驟如下：

(1) 依正常轉動方向轉動手輪，使得手輪上之白點標記①對齊機頭上之標記②。

(2) 調整撥線桿平坦部位與針中心距離1 mm，鎖緊撥線桿調整螺絲⑤，使撥線桿被其鎖圈⑥壓住及固定。

(3) 不用撥線桿時，請將其開關⑦切掉。

1. The thread wiper location (Fig. 37, 38, 39)
Please adjust the thread wiper according the the thickness of the materials.

The adjusting steps are as the followings.

(1) Turn the hand wheel in normal rotating direction, so that the white mark ① can align with the mark ② on the machine head.

(2) Adjust the flat straight part of the thread wiper in a distance of 1 mm from the center of the needle. Lock the adjust screw ⑤ of the thread wiper, so that the thread wiper can be fixed and firmly pressed by its collar ⑥.

(3) Please turn off the thread wiper switch ⑦, when there is not necessary to use the thread wiper.

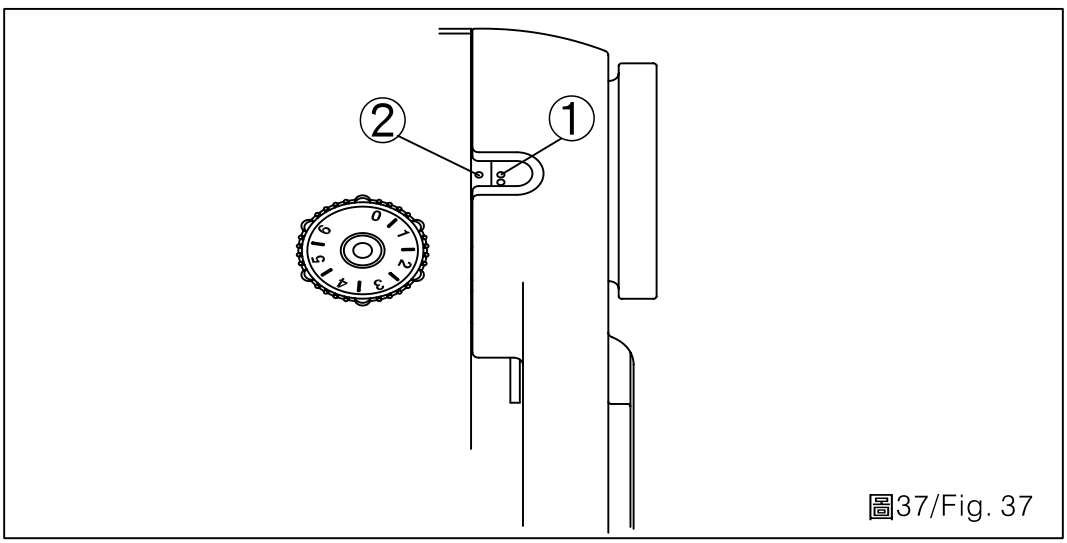

圖37/Fig. 37

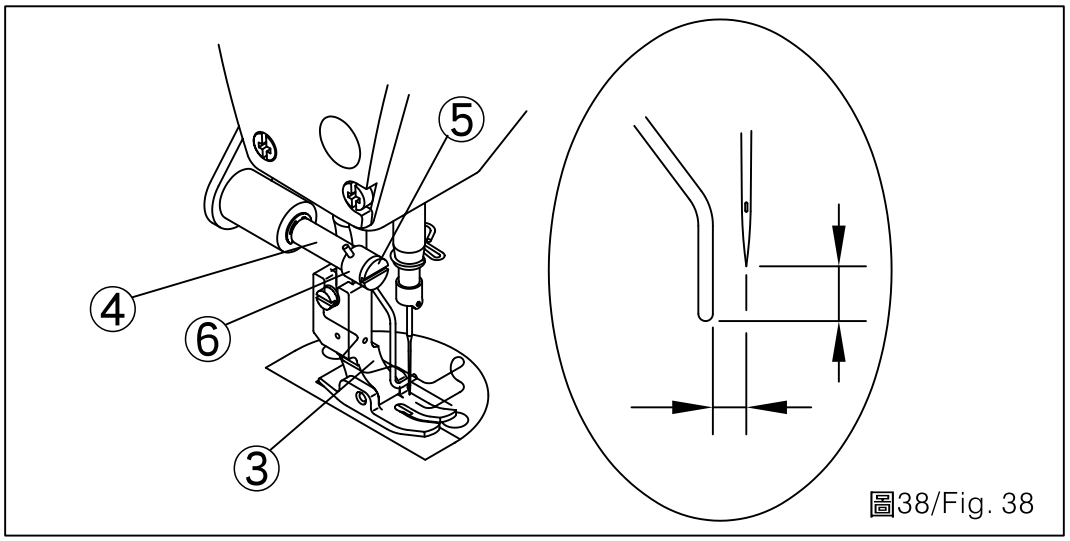

圖38/Fig. 38

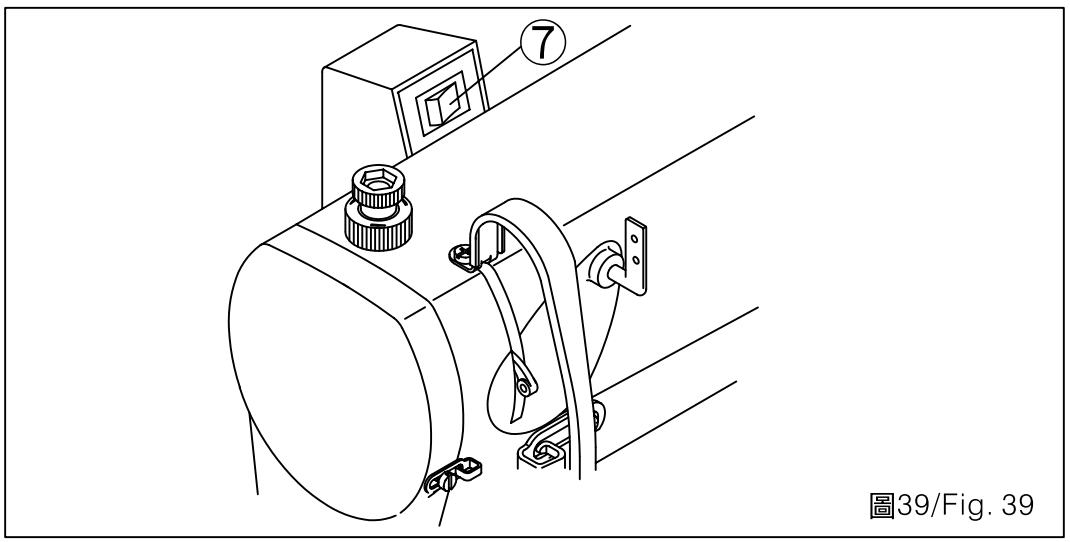

圖39/Fig. 39

單針高速平縫下乘式桌板圖
TABLE CUT-OUT SEMI-SUBMERGED
單位/UNIT:MM
所有尺寸公差/DIFFERENCE:±2
長度(L):1200/1070
全封邊灰格紋光塑面台板

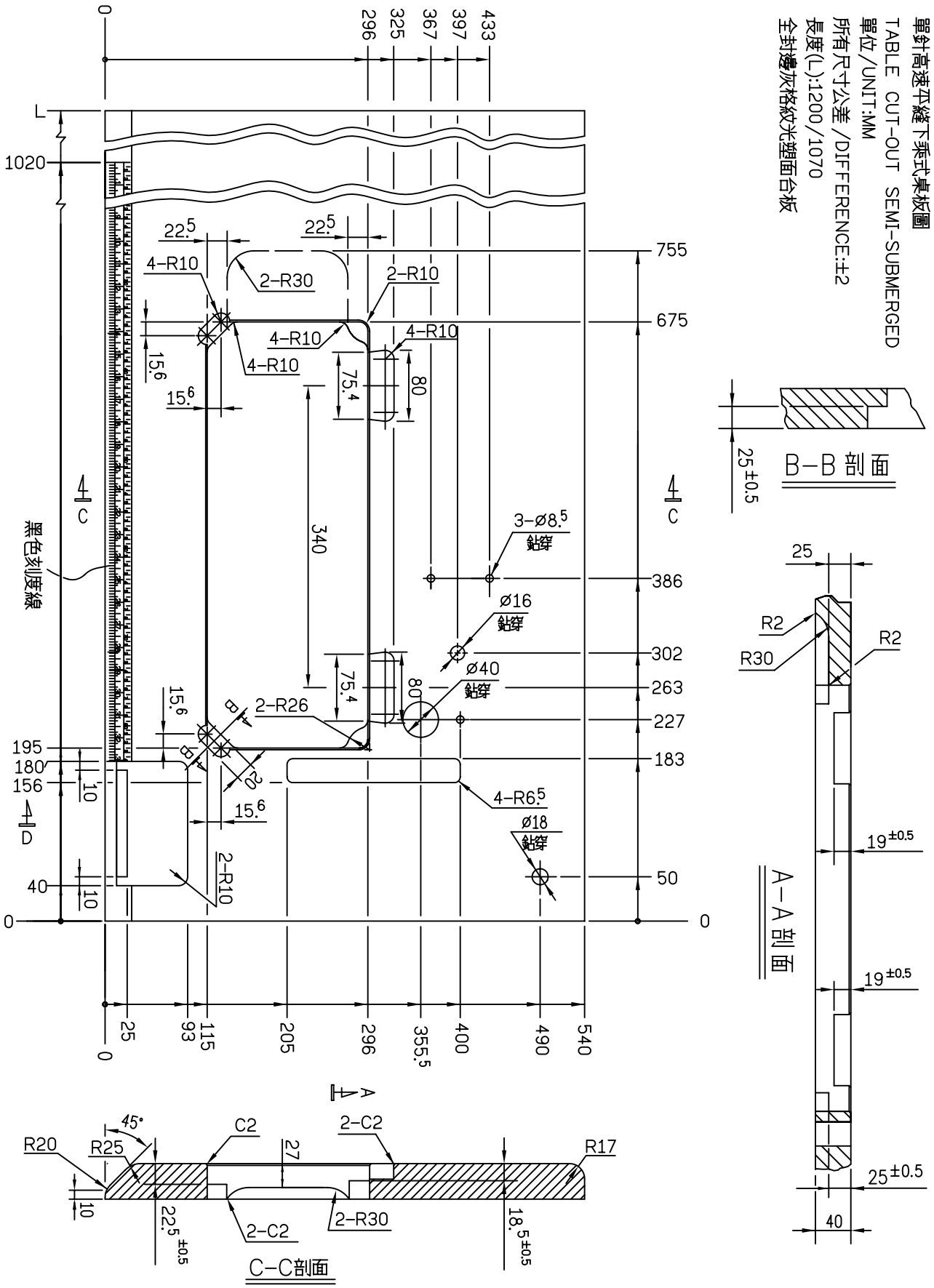

L818F

高林股份有限公司 KAULIN MFG. CO., LTD.

The specification and/or appearances of the equipment described in this instruction book are subject to change because of modification without previous notice.

LY08F. JUN. 2005